October 1978

ENVIRONMENTAL ASSESSMENT OF THE DOMESTIC PRIMARY COPPER, LEAD AND ZINC INDUSTRIES

°PREPUBLICATION COPY°

by

PEDCo Environmental, Inc.
11499 Chester Road
Cincinnati, Ohio 45246

Contract No. 68-03-2537, Work Directive No. 1

EPA Project Officers

John O. Burckle and Margaret J. Stasikowski
Industrial Pollution Control Division
Industrial Environmental Research Laboratory
5555 Ridge Avenue
Cincinnati, Ohio 45268

U.S. ENVIRONMENTAL PROTECTION AGENCY
Industrial Environmental Research Laboratory
5555 Ridge Avenue
Cincinnati, Ohio 45268

NOTICE

This document has been reviewed by the Office of Research and Development, U.S. Environmental Protection Agency, and approved for publication as an INTERIM report. Approval does not signify that the contents necessarily reflect the views and policies of the Environmental Protection Agency nor does mention of commercial products constitute endorsement or recommendation for use. This report is being circulated for comment on its technical accuracy and policy implications. Following receipt of these comments, it is planned to make appropriate changes and publish a final report. Publication of this interim report is, therefore, on a limited basis.

This INTERIM report is intended to provide state-of-the-art information on methods to assess the load of pollutants on watercourses from nonpoint sources. The "user" should be aware that some of the technical aspects may be changed in the final report. Nevertheless, this interim report does outline the type of methods that can be used to generate the assessments and specifies the data which are required.

PREFACE

The purpose of this study has been to assemble the data needed for a comparative assessment of all discharges (air, water, and solid waste) from the production of primary copper, lead, and zinc in the United States. This "multimedia" approach has resulted in a comprehensive overview that allows the environmental problems of these industries to be addressed collectively, rather than on an individual basis. The report outlines the processes used for the production of these metals, and the associated environmental discharges and control strategies. It does not include economic analyses or detailed performance assessments of pollution control devices and treatment technologies, as a principal objective of this effort has been to provide the background information required to decide where such studies are most needed. The report also identifies industrial processes and practices that could result in more effective utilization of this country's raw materials and energy resources. The data were assembled largely from the open literature, with theoretical means used to fill gaps in the data, resolve inconsistencies, and confirm literature findings. The results of previous single-media investigations were assigned to the appropriate categories. Emphasis was placed on fullest identification of all polluting components from readily available information.

This report will be used as a reference by working groups within the U.S. Environmental Protection Agency, as well as state and local control agencies and individual researchers. It summarizes all data existing extant in a format allowing continuous updating and further quantification as new facts become available. The Metals and Inorganic Chemicals Branch of the Industrial Pollution Control Division should be contacted for additional information on this program.

ABSTRACT

This report presents the results of a multimedia (air, water, and solid waste) study of the environmental impacts of the primary copper, lead, and zinc industries in the United States. All production processes currently employed by these industries are identified and described, and all pollutant effluents and environmental effects from those processes are characterized. The various pollution control systems in use or potentially applicable are described and evaluated for domestic application. In addition, alternate production processes that are in use at foreign smelters or are being developed for use in this country are reviewed.

There are sixteen primary copper smelters in this country, all but two of which are located in ore-producing regions in the West. Including mining operations, the copper industry is the largest single employer in Arizona, Montana, Nevada, and Utah. The principal environmental impacts of the industry are atmospheric emissions of SO_2 and trace metals from the smelters. Control of these emissions is complicated by the insufficient markets for by-product sulfur compounds, the poor collection of some metallic fume in the high-temperature particulate control devices often employed, and the problems inherent in capturing "fugitive" emissions. Water pollution is most serious at mines and concentrating plants, and includes acid drainage and trace metal contamination. However, water problems are mitigated somewhat by the fact that many mines and smelters are located in remote arid regions.

Lead is produced by six primary smelters, with somewhat over half of the industry's capacity located in Missouri and the remainder in other Western states. The Missouri smelters process ore from the "New Lead Belt" discovered in that state in 1965, and a large percent of future lead supplies are expected to originate from this region. Lead mining and concentrating operations produce metal-laden wastewaters that are effectively controlled in Missouri by biotic degradation and natural precipitation at high pH, although they may be less well controlled in other mining regions. Lead smelters release particulate matter and metal fume, and SO_2 emissions are currently only about 50 percent controlled.

There are six primary zinc smelters, as well as one additional plant that produces zinc oxide from a primary feed material. Several of these are located in or near populated areas. A number of zinc smelters have closed in the past decade because of environmental considerations and poor economic prospects. The technologies now in use in the industry have facilitated effective particulate control and reduced the potential for sulfur oxide air pollution. The principal environmental problems are associated with wastewater discharges resulting from gas-cleaning operations prior to sulfuric acid production.

The report summarizes the air, water, and solid waste management practices in the primary copper, lead, and zinc industries. Programs for further research and development are presented which are based on the gaps identified in the data base.

CONTENTS

Preface iii
Abstract iv
Figures ix
Tables ix
Acknowledgment xiv

1. Introduction 1
2. Copper Industry 14
Industry Description 14
Industry Analysis, Copper 30
Process No. 1, Mining 31
Process No. 2, Concentrating 35
Process No. 3, Multiple-Hearth Roasting 42
Process No. 4, Fluidization Roasting 49
Process No. 5, Drying 52
Process No. 6, Reverberatory Smelting 54
Process No. 7, Electric Smelting 63
Process No. 8, Flash Smelting 65
Process No. 9, Peirce-Smith Converting 68
Process No. 10, Hoboken Converting 75
Process No. 11, Noranda 77
Process No. 12, Electric Furnace Slag Treatment 79
Process No. 13, Flotation Slag Treatment 81
Process No. 14, Contact Sulfuric Acid Plant 83
Process No. 15, DMA SO_2 Absorption 90
Process No. 16, Elemental Sulfur Production 93
Process No. 17, Arsenic Recovery 95
Process No. 18, Fire Refining and Anode Casting 98
Process No. 19, Electrolytic Refining 105
Process No. 20, Electrolyte Purification 109
Process No. 21, Melting and Casting Cathode Copper 113
Process No. 22, Slime Acid Leach 116
Process No. 23, $CuSO_4$ Precipitation 118
Process No. 24, Slimes Roasting 120
Process No. 25, Slime Water Leach 122
Process No. 26, Doré Furnace 123
Process No. 27, Scrubber 126
Process No. 28, Soda Slag Leach 128
Process No. 29, Selenium and Tellurium Recovery 130
Process No. 30, Doré Metal Separation 132
Process No. 31, Vat Leaching 133

Process No. 32, Sulfide Ore Leaching 136
Process No. 33, Cementation 137
Process No. 34, Solvent Extraction 141
Process No. 35, Electrowinning 143
Process No. 36, Sulfation Roasting 145
Process No. 37, Sponge Iron Plant 147
Process No. 38, CLEAR Reduction 149
Process No. 39, CLEAR Regeneration - Purge 151
Process No. 40, CLEAR Oxidation 153
3. Lead Industry 155
Industry Description 155
Industry Analysis 161
Process No. 1, Mining 164
Process No. 2, Concentrating 168
Process No. 3, Sintering 175
Process No. 4, Acid Plant 184
Process No. 5, Blast Furnace 186
Process No. 6, Slag Fuming Furnace 193
Process No. 7, Drossing 198
Process No. 8, Dross Reverberatory Furnace 201
Process No. 9, Cadmium Recovery 203
Process No. 10, Reverberatory Softening 204
Process No. 11, Kettle Softening 207
Process No. 12, Harris Softening 209
Process No. 13, Antimony Recovery 211
Process No. 14, Parkes Desilverizing 213
Process No. 15, Retorting 215
Process No. 16, Cupelling 216
Process No. 17, Vacuum Dezincing 218
Process No. 18, Chlorine Dezincing 220
Process No. 19, Harris Dezincing 221
Process No. 20, Debismuthizing 223
Process No. 21, Bismuth Refining 225
Process No. 22, Final Refining and Casting 226
4. Zinc Industry 228
Industry Description 228
Industry Segment Analysis 242
Process No. 1, Mining 243
Process No. 2, Concentrating 246
Process No. 3, Ferroalloy Production 254
Process No. 4, Multiple-Hearth Roasting 256
Process No. 5, Suspension Roasting 260
Process No. 6, Fluidized-Bed Roasting 263
Process No. 7, Sintering 266
Process No. 8, Vertical Retorting 274
Process No. 9, Electric Retorting 281
Process No. 10, Oxidizing Furnace 285
Process No. 11, Leaching 288
Process No. 12, Purifying 291
Process No. 13, Electrolysis 293
Process No. 14, Melting and Casting 296
Process No. 15, Cadmium Leaching 298

Process No. 16, Cadmium Precipitation 301
Process No. 17, Cadmium Purification and Casting 303
5. Air Management 306
Emission Characteristics 306
Emission Control Systems 312
Fugitive Emissions 318
6. Water Management 320
Sources of Secondary Water Pollution 321
Concentrator Effluent 325
Sulfide Weathering 326
Waste Characteristics 328
Waste Handling and Treatment 329
Advanced Treatment 340
7. Solid Waste Management 346
Sources and Characteristics 346
Waste Treatment 350
8. Emerging Technology 352
9. Recommended Research and Development Programs 374

FIGURES

Number		Page
1-1	U.S. Sources and Uses of Nonferrous Metals	4
1-2	Yearly Copper, Lead, and Zinc Commodity Prices, 1962-1976	5
1-3	Primary U.S. Nonferrous Smelting and Refining Locations	10
2-1	Copper Industry Flow Sheet	28
3-1	Lead Industry Flow Sheet	162
4-1	Zinc Industry Flow Sheet	240

TABLES

Number		Page
1-1	By-Product Elements of the Industries - 1975	3
1-2	By-Products - Primary Nonferrous Smelter	8
1-3	Mine Production of Copper, Lead, and Zinc by States (1976)	9
1-4	Materials Handled at Copper, Lead, and Zinc Mines (1972)	12
2-1	Copper Minerals Important in U.S. Production	15
2-2	Typical Analysis of Copper Ore Used at White Pine Copper Company, Michigan	17
2-3	Consumption of Refined Copper in 1976	19
2-4	Statistical Data for the Primary Copper Industry in the United States in 1976	19
2-5	Principal By-Product Sulfuric Acid Producers - 1974	20

2-6	U.S. Primary Copper Producers (Conventional Smelting/ Refining Operations)	21
2-7	Twenty-Five Leading Copper Mines in the United States in 1974	22
2-8	1976 Survey of Mine and Plant Expansions in the United States	24
2-9	Annual Generation of Hazardous Pollutants from U.S. Primary Copper Industry - 1968 (metric tons)	26
2-10	Raw Waste Load in Water Pumped from Selected Copper Mines	33
2-11	Analysis of Copper Concentrate	37
2-12	Typical Flotation Collectors	38
2-13	Metallic Elements in Concentrator Wastewater	40
2-14	Typical Size Profile of Multiple-Hearth Copper Roaster Effluents	44
2-15	Concentration and Weight Analysis of Particulate Effluents from a Multiple-Hearth Copper Roaster	45
2-16	Typical Levels of Volatile Metals in Domestic Copper Ore Concentrations	46
2-17	Composition of Charge to a Reverberatory Furnace	55
2-18	Analysis of Particulates Emitted from a Reverberatory Furnace	56
2-19	Composition of Reverberatory Furnace Exhaust Gases	57
2-20	Effluents from Slag Granulation (mg/l)	58
2-21	General Range of Reverberatory Furnace Slag Composition	60
2-22	Material Balance on Converters - Smelters in Arizona (percent)	69
2-23	Composition of Converter Dust	70
2-24	Particle Size Distribution in Converter Dust	71
2-25	Particulate Emissions Analysis at Stack Outlet for Reverberatory Furnace and Converter	71
2-26	Converter Off-Gas Composition	73

2-27	Estimated Maximum Impurity Limits for Metallurgical Off-Gases Used to Manufacture Sulfur Acid (Approximate limit, mg/Nm^3)	84
2-28	Raw Waste Characterization: Acid Plant Blowdown	86
2-29	Acid Plant Blowdown Control and Treatment Practices	88
2-30	Analysis of Arsenic Plant Washdown Water	96
2-31	General Range Analysis of Anode Copper	99
2-32	Water Requirements for Copper Refineries	102
2-33	Waste Effluents from Anode Cooling Water	102
2-34	Contact Cooling Water Control and Treatment Practices	103
2-35	General Range Analysis of Electrolyte, Refined Copper and Anode Slime	108
2-36	Waste Effluents from $NiSO_4$ Barometric Condenser	111
2-37	Analysis of Water Used to Cool Refinery Shapes (Concentrations in mg/l)	114
2-38	Doré Metal Analysis	124
2-39	Analysis of Tailings Effluent from a Precipitation Plant	140
3-1	Lead Minerals, By Name, and Composition	156
3-2	Principal Statistics for the Primary Lead Industry in the United States in 1976	158
3-3	Domestic Primary Lead Producers	159
3-4	Analysis of a Missouri Mine Water	167
3-5	Analysis of an Idaho Mine Water	167
3-6	Typical Southeastern Missouri Lead Concentrate Analyses (Percent by weight)	169
3-7	Western Lead Concentrate Analyses	170
3-8	Flotation Chemicals	172
3-9	Lead Mill Wastewater Analysis	173
3-10	Sinter Analysis	176

3-11	Sinter Machine Feed	177
3-12	Grain Loading and Weight Analysis of Input Feed and Emissions, Updraft Lead Sintering Machine	178
3-13	Typical Size Profile of Emissions, Updraft Lead Sintering Machine	178
3-14	Analysis of Sinter Machine Exhaust Gases (Missouri Lead Operating Company)	180
3-15	Atmospheric Control Systems on Primary Lead Sintering Machines	181
3-16	Wastewater Treatment at Primary Lead Acid Plants	185
3-17	Scrubber Wastewater Treatment at Primary Lead Plants	185
3-18	Lead Bullion Composition	187
3-19	Typical Blast Furnace Slag Analysis	188
3-20	Typical Blast Furnace Charge	189
3-21	Exhaust Gas Analysis After Air Dilution and CO Combustion	190
3-22	Atmospheric Control Systems on Primary Lead Blast Furnaces	192
3-23	Waste Effluents from Slag Granulation	194
3-24	Effluent Concentrations with Neutralization and Clarification	195
3-25	Primary Lead Slag Granulation Wastewater Treatment	196
3-26	Lead Bullion Analysis (Basis: As Drossed)	199
3-27	Typical Compositions of Softened Lead Bullion and Slag (Amounts in weight percent)	205
3-28	Typical Retort Analysis	215
4-1	Mining, Production, and Consumption of Zinc and Cadmium (metric tons)	229
4-2	Twenty-Five Leading Zinc Mines in the United States	230
4-3	Common Ores Mined for Their Zinc Content	233
4-4	U.S. Slab Zinc Consumption - (1976)	235

4-5	Grades of Commercial Zinc	235
4-6	Primary Zinc Processing Plants in the United States	236
4-7	Principal Statistics for the Primary Zinc Industry in the United States - 1976	238
4-8	Range of Compositions of Zinc Concentrates	247
4-9	Typical Flotation Reagents Used for Zinc Concentrations	249
4-10	Ranges of Constituents of Wastewaters and Raw Waste Loads for Five Selected Mills	251
4-11	Product Sinter Composition (percent)	267
4-12	Particulate Emissions from a Zinc Sintering Process	270
4-13	Particulate Emissions from a Zinc Coking Furnace	271
4-14	Uncontrolled Particulate Emissions from a Zinc Vertical Retorting Furnace	278
4-15	Analysis of Vertical Retort Furnace Residues	279
4-16	Zinc Oxide Impurities and Brightness	286
4-17	Selected Constituents of Oxidizing Furnace Residue	287
4-18	Analyses of Anode Sludges from Electrolytic Zinc Refining	295
5-1	Sources of Atmospheric Emissions from Mining, Concentrating, and Smelting Operations	307
5-2	Elemental Analysis of Particulate Size Fractions	315
5-3	Selected Trace Element Emissions in Particulate Matter From ESP on a Copper Smelter Reverberatory Furnace	318
6-1	Sources of Liquid Effluents from Mining, Concentrating, and Smelting Operations	322
6-2	Comparison of Tailings Pond Reservoir Linings	333
6-3	Metal Concentrations in Effluent from a Mine Drainage Clarifier	336
7-1	Sources of Solid Waste From Mining, Concentrating, and Smelting Operations	347

ACKNOWLEDGMENT

This report was prepared by PEDCo Environmental, Inc., under the direction of Mr. Timothy W. Devitt. The PEDCo project managers were Mr. Thomas K. Corwin and Dr. Gerald A. Isaacs. Principal authors were Mr. Thomas K. Corwin, Mr. Hal M. Drake, Dr. Gerald A. Isaacs, Mr. Douglas J. Morell, and Mr. A. Christian Worrell, III.

Project officers for the Industrial Environmental Research Laboratory of the U.S. Environmental Protection Agency were Mr. John O. Burckle and Ms. Margaret J. Stasikowski.

The authors appreciate the efforts and cooperation of everyone who participated in the preparation of this report.

SECTION 1

INTRODUCTION

This report presents the results of an environmental assessment of the primary copper, lead, and zinc industries in the United States. The report is multimedia in scope, covering the fields of air, water, and solid waste. An open literature survey identified all of the processes employed in the primary production of these three metals having a significant environmental impact. The report covers all phases of production, from the mining and concentrating of ores to the smelting, refining, and casting of copper, lead, zinc, and related products. All production processes, unit operations, and pollutant discharges were examined in detail to characterize their environmental impacts completely and accurately. Emphasis was placed on fullest identification of all polluting components from readily available information, with the results of previous single-media investigations assigned to the appropriate categories. In some cases, engineering studies were undertaken to describe sources of pollution and to predict the quantity and character of discharges based upon the materials processed, production capacities, and process conditions. As a result of certain limitations on the amount of information available, some important questions have been left unanswered. However, the report constitutes a comprehensive multimedia environmental overview, which identifies these information gaps as well as research and development efforts needed for more effective pollution control.

As defined for this report, the domestic primary copper, lead, and zinc industries consist of the facilities in this country that extend from the mining of the ores of these three metals through the production of the purified metals as marketable castings. Included are concentrating plants that partially separate the ore minerals, smelters that produce the metals, and refineries that purify them to within accepted quality specifications. These industries do not include operations that fabricate the metals into commercial products, or that blend them to manufacture alloys.

Although each of the three industries makes a distinct product, there is such a strong interrelation between them that for many years they have been considered a single economic unit. Their products are marketed through many of the same channels, and with the same procedures. Since many of the ores contain recoverable quantities of more than one of the metals, there is regular exchange of material, and there are companies that produce two, or all three, of the metals. The industries share similar production techniques and produce similar waste materials.

The principal products of the industries are the three metals, copper, lead, and zinc. Copper has been one of the most useful metals since the beginning of recorded history. Its applications now include direct fabrication into articles that range from plumbing to cooking pots, and copper is absolutely necessary for the continuation of the electrical and electronic industries as we know them. Lead is used in solders and type metals, and it is the principal material used for storage batteries and for radiation shielding. Zinc is most used as a base for die casting alloys, as galvanizing for protection of steel, and as the alloy with copper known as brass.

The value of the products of these industries in 1973 was $2.9 billion, or about 0.2 percent of the gross national product. This figure includes the value of many by-products. Eighteen other chemical elements are isolated from copper, lead, and zinc ores, although in many cases the final processing is completed at plants other than the smelters. Some of these elements, such as cadmium, selenium, and tellurium, have no other primary source. A major source of domestic gold and silver is as a by-product of this industry. Table 1-1 lists these by-product elements and pertinent data.

In terms of domestic consumption, copper is the largest of the three primary metals. In 1976, 1.8 million metric tons of copper were used, compared to 1.0 million metric tons of zinc and 1.1 million metric tons of lead (1). Figure 1-1 provides information on sources and uses of copper, lead, and zinc from 1950 to 1976. Although consumption for the last two years has been substantially below previous years, the demand for copper is expected to increase. Forecasts for the year 2,000 range from 3 to 5 times the present consumption, as high as 8 to 13 million tons per year. Markets for lead and zinc, however, have both suffered declines that are expected to continue, at least for the short term. Other materials have entered strongly into their former markets for paints, plumbing, and small castings. A major use of lead has been in additives for motor fuel; this use is being phased out. Plastic coatings are replacing some of the corrosion-prevention applications that these metals once filled.

These industries are a major source of employment in some sections of the country. Total direct employment is approximately 50,000 workers. These industries are the largest single employer in four states, and in several communities they are virtually the only ones. One metropolitan area, Salt Lake County, Utah, estimates that 14.6 percent of the work force is directly or indirectly accountable to these industries.

Thirteen different companies operate smelters in the United States. In addition, many other companies, large and small, are engaged primarily in mining and concentrating operations. No single company dominates any one of the industries. The products are sold as commodities, meeting international specifications for quality, at prices that must meet international supply and demand. There is very strong international competition.

Commodity price trends for the past 10 years are shown in Figure 1-2. They show an increase in price typical of other materials, but they also show

TABLE 1-1. BY-PRODUCT ELEMENTS OF THE COPPER, LEAD, AND ZINC INDUSTRIES - 1975

By-product	Principal source	Approximate quantity	Remarks
Selenium	Copper electrolytic slimes	325 metric tons	Only industrial source
Tellurium	Copper slimes and lead concentrates	120 metric tons	Partial disclosure
Nickel	Copper smelter	815 metric tons	From imported concentrates
Arsenic	Copper smelter flue dusts	Not disclosed	From imported concentrates
Molybdenum	Copper flotation mills	18,000 metric tons	
Rhenium	Copper flotation mills	4,500 metric tons	From molybdenum concentrates
Silver	Copper slimes and lead concentrates	1,350 metric tons	Important economic by-product
Gold	Copper slimes and lead concentrates	10 metric tons	Important economic by-product
Platinum	Copper slimes and lead concentrates	Not disclosed	Important economic by-product
Palladium	Copper slimes and lead concentrates	Not disclosed	Important economic by-product
Antimony	Lead smelters	8,500 metric tons	Common constituent of lead ores
Cadmium	Zinc smelters	2,270 metric tons	Only industrial source
Indium	Zinc smelter residues	Not disclosed	From cadmium concentrates
Gallium	Zinc smelter residues	Not disclosed	From cadmium concentrates
Thallium	Zinc smelter residues	Not disclosed	From cadmium concentrates
Mercury	Zinc smelter residues	Very small	Only occasional ores recoverable
Germanium	Zinc smelter residues	Very small	No data has been disclosed
Bismuth	Copper and lead ores	Not disclosed	Limited market

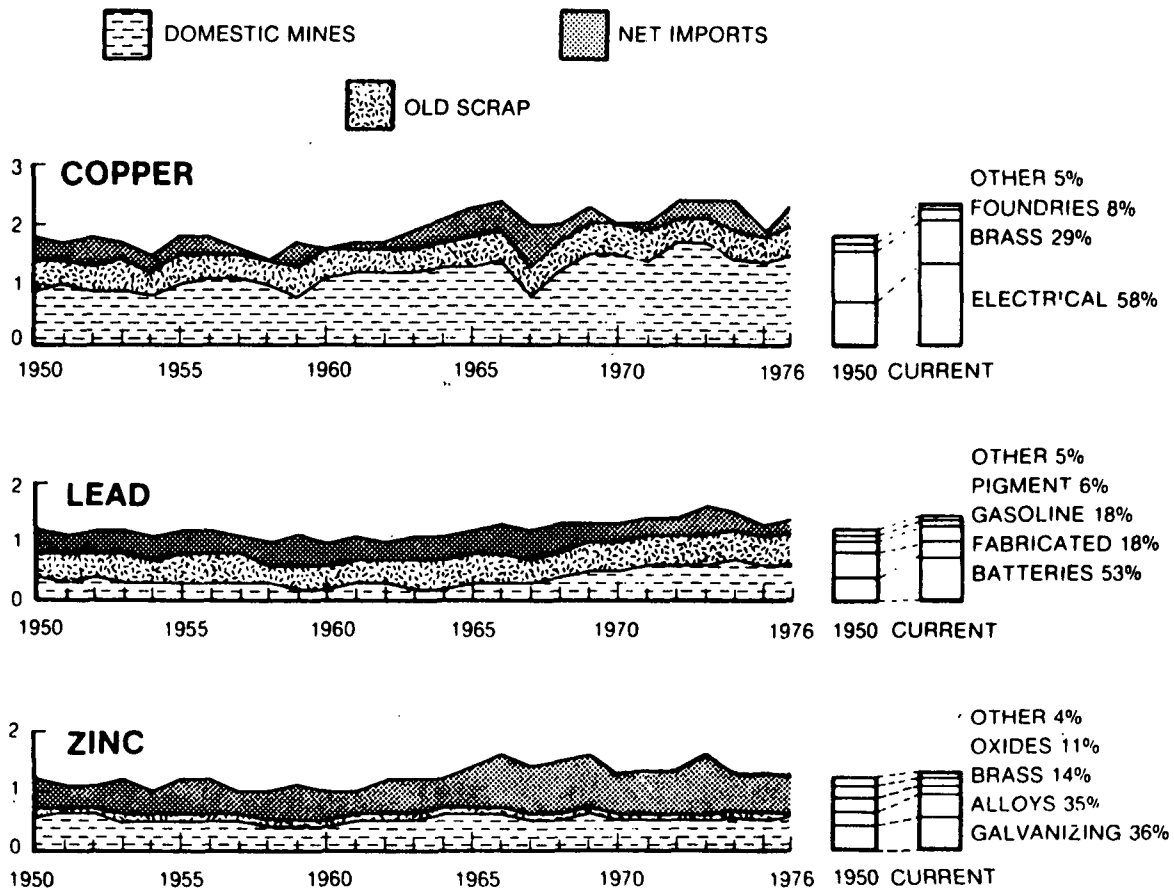

Figure 1-1. U.S. sources and uses of nonferrous metals (2).
(Million of tons)

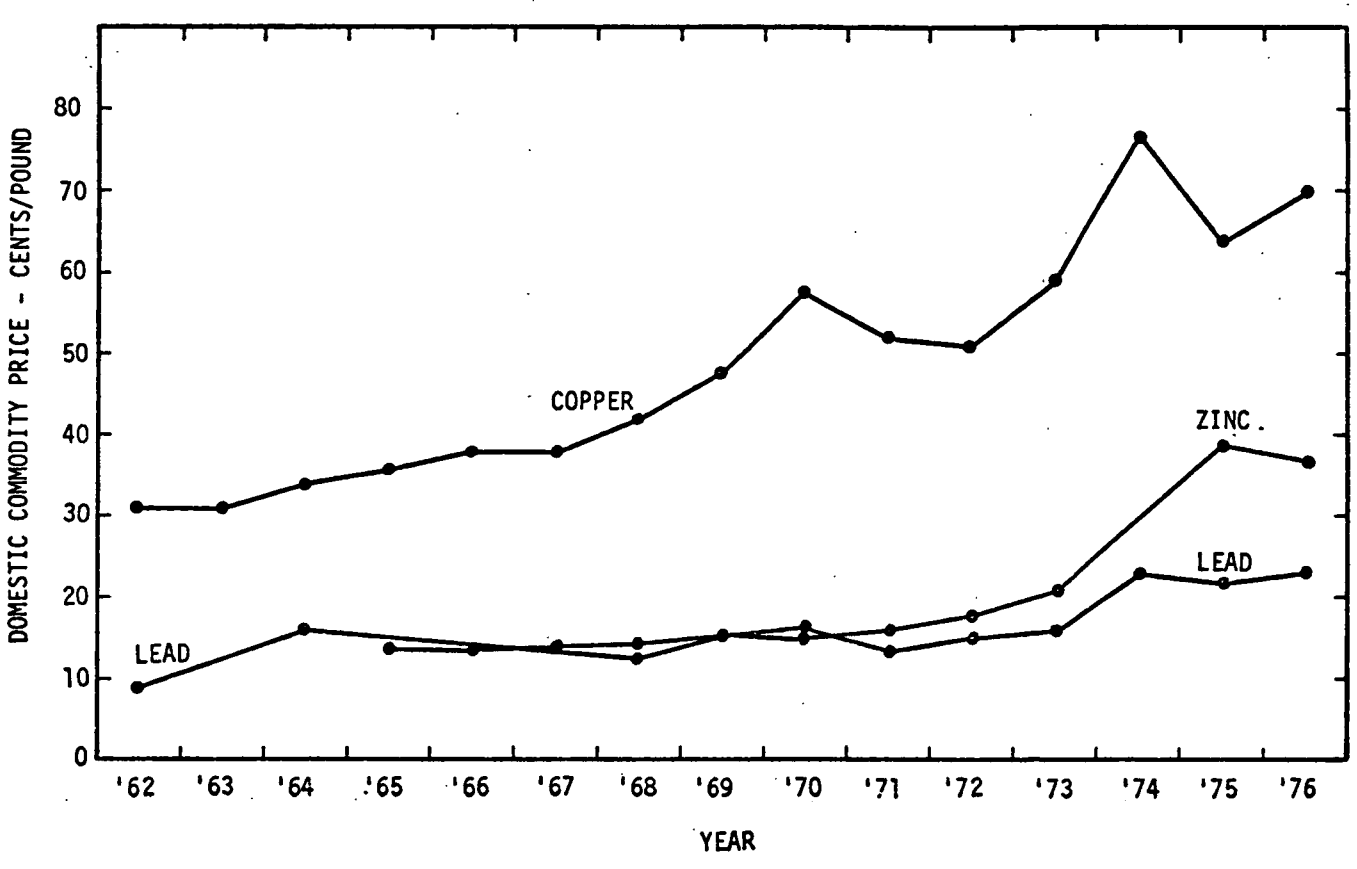

Figure 1-2. Yearly copper, lead, and zinc commodity prices, 1962-1976.

the rather unstable price picture that has affected this industry in the last few years. This graph also shows that copper is considerably more costly than the other two metals. Copper is not a common element in the earth's crust, as indicated by the grade of the ore being mined. Most lead ores are 3 to 8 percent lead, sometimes much higher. Zinc ores average 8.8 percent zinc. Domestic copper ores, however, rarely reach 4 percent copper. They average less than 1 percent, and ores as low as 0.4 percent are being processed.

The United States is almost self-sufficient in its smelter production of copper and slightly less so for lead; it is not self-sufficient for zinc. Comparison of 1975 consumption figures with production of primary and secondary metals show that we smelted and refined 100 percent of the copper we used and 78 percent of the primary lead, but only about half of the zinc. The U.S. Bureau of Mines (USBM) has classified zinc as a shortage commodity.

In addition to copper, lead, and zinc, a variety of other elements and chemicals are produced at the manufacturing facilities of these industries. Table 1-2 lists these by-products. One of the most important by-products is sulfuric acid. For one company that is favorably located near major markets for this product, sulfuric acid is a co-product, if not the primary one. Most other smelters, however, are located far from potential users; transportation costs make it less expensive for the user to buy sulfur for on-site manufacture of the acid. Most other countries have nothing comparable to the extensive deposits of sulfur that are found along the U.S. Gulf Coast. In other countries, smelter sulfur has no major competition, and their acid finds a profitable market.

The map in Figure 1-3 shows the location of the 28 copper, lead, and zinc smelters in the United States, and of the seven copper refineries. Copper is refined in a separate, but often adjacent plant, whereas lead and zinc smelters more typically include facilities for purifying the product. This map shows that plants are located in fifteen states. Most of the copper smelters are located in or near copper mining districts, and five states account for 85 percent of the blister copper. Four states produce all the lead, using concentrates partly from local mines. Only one zinc smelter is now located in an active mining district.

Mine production of the ores is shown in Table 1-3. Table 1-4 indicates the scale of these operations in terms of materials handled. Arizona mines produce more than half the copper, and Missouri mines produce about 80 percent of the lead. Zinc is frequently found in both copper and lead ores, and much zinc is mined as a by-product or co-product with other metals.

Many of the smelters and refineries in the United States, especially in the copper industry, are old plants, some having begun operations before the turn of the century. Although most of these older plants have since been modified, they are generally, by the standards of some other industries, inefficient and obsolete. The owners of these plants find it very difficult

to justify the cost of rebuilding or modernizing them. Some plants are directly associated with large mines, and the owners find that as the mines become deeper and the best ores become exhausted, production costs increase. Other plants are "custom" operations that are operated as service industries, and process concentrates for a fee and at a very low profit. A search for new, more efficient, processes is under way.

TABLE 1-2. BY-PRODUCTS - PRIMARY NONFERROUS SMELTERS

Company	Location	Primary product	By-products
AMAX, Inc.	East St. Louis, Illinois	Zinc	Sulfuric acid, zinc sulfate, cadmium
	Boss, Missouri	Lead	Sulfuric acid
The Anaconda Co.	Anaconda, Montana	Copper	Sulfuric acid, beryllium
ASARCO, Inc.	Tacoma, Washington	Copper	Arsenic, arsenic trioxide, sulfur dioxide, sulfur sulfuric acid, gold, silver
	Hayden, Arizona	Copper	Sulfuric acid
	El Paso, Texas	Copper, lead	Sulfuric acid, gold, silver
	East Helena, Montana	Lead	Zinc fume, sulfuric acid, soda ash matte, soda ash speiss
	Glover, Missouri	Lead	Copper dross
	Corpus Christi, Texas	Zinc	Sulfuric acid, zinc sulfate, cadmium
	Columbus, Ohio	Zinc oxide	Sulfuric acid
The Bunker Hill Co.	Kellogg, Idaho	Lead, zinc	Sulfuric acid, zinc oxide, cadmium, copper matte, copper residue, refined gold doré, refined silver, silver concentrates
Cities Service Co., Inc.	Copperhill, Tennessee	Copper, Iron oxide, Sulfuric acid	Copper carbonate, copper sulfate, iron sulfate (ferric), sodium hydrosulfite, sulfur trioxide, surface-active agents, p-toluenesulfonic acid, emulsifiable liquid copper fungicide, chelated plant and animal nutrients
Copper Range Co.	White Pine, Michigan	Copper	Silver
Inspiration Consolidated Copper Co.	Miami, Arizona	Copper	Sulfuric acid, molybdenum, gold, silver, selenium

TABLE 1-2 (continued).

Company	Location	Primary product	By-products
Kennecott Copper Corp.	Garfield, Utah	Copper	Ammonium perrhenate, molybdenum disulfide, molybdenum trioxide, nickel sulfate, sulfuric acid, gold, silver, selenium
	Hurley, New Mexico	Copper	Sulfuric acid, molybdenum
	Hayden, Arizona	Copper	Sulfuric acid
	McGill, Nevada	Copper	Molybdenum
Magma Copper Co.	San Manuel, Arizona	Copper	Sulfuric acid, molybdenum, gold, silver
National Zinc Co.	Bartlesville, Oklahoma	Zinc	Ammonia, carbon dioxide, sulfuric acid, zinc oxide, cadmium, metal powders, spiegeleisen, zinc alloys
New Jersey Zinc Co.	Palmerton, Pennsylvania	Zinc	Sulfuric acid, zinc oxides, cadmium, lead sulfate, spiegeleisen
Phelps Dodge Corp.	Morenci, Arizona	Copper	Sulfuric acid, gold, silver
	Douglas, Arizona	Copper	Gold, silver
	Ajo, Arizona	Copper	Sulfuric acid, gold, silver
	Hidalgo, New Mexico	Copper	Sulfuric acid, elemental sulfur
St. Joe Minerals Corp.	Herculaneum, Missouri	Lead	Sulfuric acid, silver bullion, copper matte
	Monaca, Pennsylvania	Zinc	Sulfuric acid, zinc oxide, cadmium, ferrosilicon, mercury

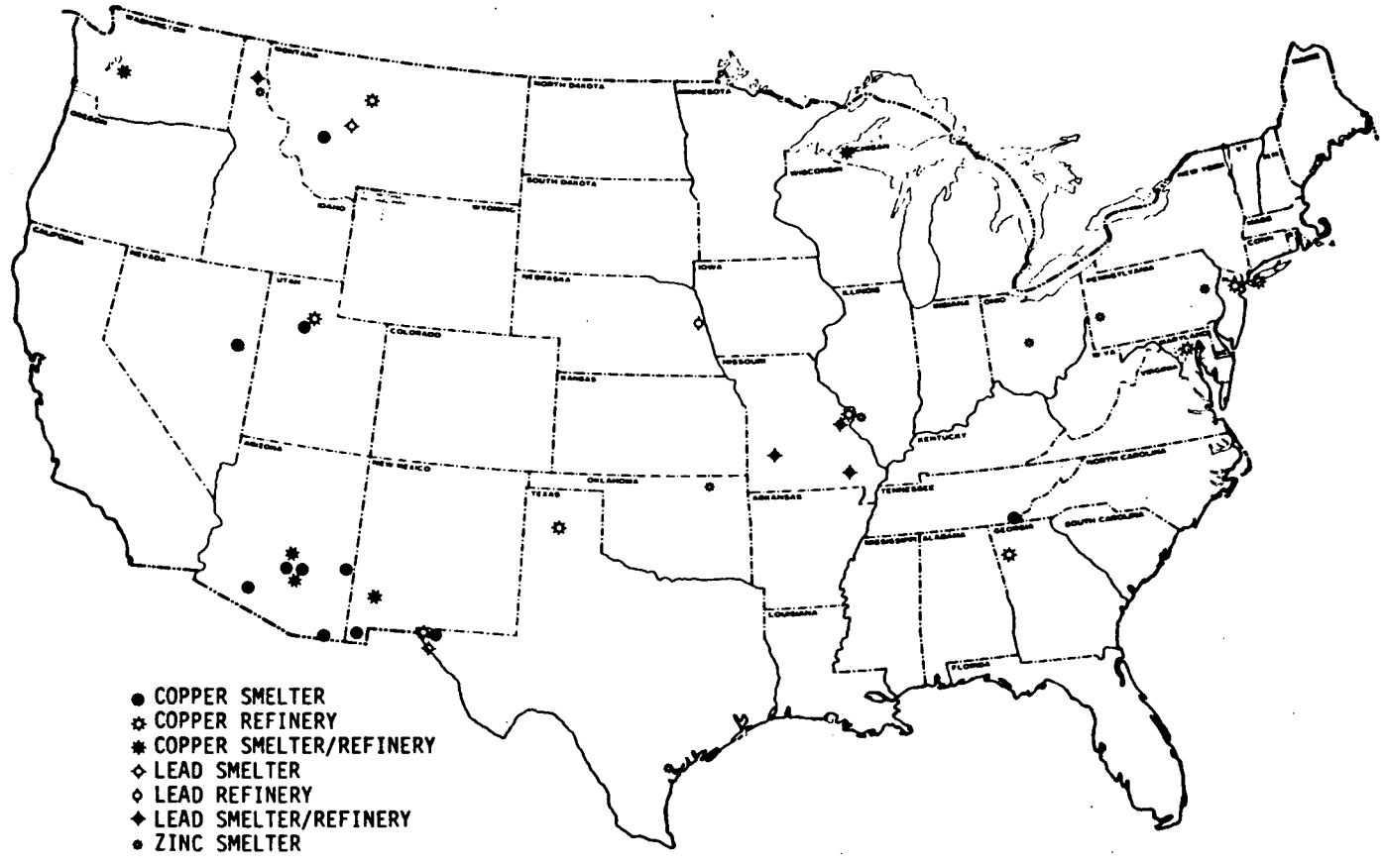

Figure 1-3. Primary U.S. nonferrous smelting and refining locations.

TABLE 1-3. MINE PRODUCTION OF COPPER, LEAD, AND ZINC BY STATES (1976)

	Metric tons as 100% of the metals		
	Copper	Lead	Zinc
Alaska		13	
Arizona	929,339	307	8,619
California	340	49	154
Colorado	2,205	24,266	45,923
Idaho	3,050	48,658	42,262
Maine	1,602	196	7,085
Michigan	39,650		
Missouri	10,024	454,491	75,777
Montana	82,655	83	58
Nevada	52,762	528	1,304
New Jersey			30,363
New Mexico	156,362		
New York		2,899	66,833
Pennsylvania			20,212
Tennessee	10,098		74,854
Utah	168,245	14,784	20,394
Virginia		1,765	10,197
Other states	230	4,931[a]	35,236[b]
Totals	11,456,562	552,970	439,271

[a] Includes Illinois, New Mexico, Oklahoma, Washington, and Wisconsin.

[b] Includes Illinois, New Mexico, Washington, and Wisconsin.

Source: U.S. Bureau of Mines.

TABLE 1-4. MATERIALS HANDLED AT COPPER, LEAD, AND ZINC SURFACE AND UNDERGROUND U.S. MINES IN 1975 (MILLIONS OF METRIC TONS) (3)

Ore	Surface			Underground			All mines		
	Crude ore	Waste	Total[a]	Crude ore	Waste	Total[a]	Crude ore	Waste	Total[a]
Copper	217.68	624.92	841.70	26.48	1.23	27.75	243.98	625.83	869.81
Lead	-	-	-	8.93	2.22	11.16	8.93	2.22	11.16
Zinc	0.07	0.04	0.11	7.70	2.49	10.16	7.78	2.52	10.34
Total	217.75	624.96	841.81	43.11	5.94	49.07	260.69	630.57	891.31

[a] Data may not add to totals shown because of independent rounding.

References

1. Commodity Data Summaries 1977. U.S. Department of the Interior. Bureau of Mines. Washington, D.C. 1977.

2. Status of the Mineral Industries 1977. U.S. Department of the Interior. Bureau of Mines. Washington, D.C. 1977.

3. Minerals Yearbook 1975. U.S. Department of the Interior. Bureau of Mines. Washington, D.C. 1975.

SECTION 2

COPPER INDUSTRY

INDUSTRY DESCRIPTION

Many recent technical articles emphasize the changes taking place in the primary copper industry. There is much speculation as to the direction these changes will or should take. Whether the trend is toward improved pyrometallurgical processing or toward adoption of hydrometallurgy, most experts agree that some basic changes are imminent.

At six installations, newer technology has been or is now operating. One new smelter now uses a continuous flash smelting process. A continuous smelting process is beginning to produce copper in Utah. One installation has produced copper with a roast-leach-electrowinning technique. Three advanced hydrometallurgical processes are approaching semicommercial production. The following description of the industry does not concentrate on these installations, since they do not now account for a sizable percentage of the copper being produced.

Most copper production is now being accomplished with the "conventional" pyrometallurgical methods that center on the energy-inefficient reverberatory furnace. Matte from the reverberatory furnace is converted to blister copper, and the blister copper is reduced, cast into anodes, and refined in electrolytic cells. These operations occur in about 25 locations, all but five of which were operating before World War II. In twelve of these locations, copper has been produced since before World War I. Although new equipment was provided during the intervening years, in most of the plants, new technology was not. Most domestic copper is being made now by the same procedures used 50 years ago.

Raw Materials

The principal raw materials for copper production are the domestic ores, which consist of copper minerals embedded in gangue rock. Throughout the world, copper in minerals is most often chemically combined with sulfur, frequently with iron or arsenic, and sometimes with other elements. Table 2-1 shows five of these sulfide minerals; the first three listed are most abundant in the ores of this country.

When sulfide minerals are exposed to air and water, they oxidize to form sulfuric acid and metal ions. The metal ion may, in turn, react with rock minerals to form metal oxides, or they may move with ground or surface waters

TABLE 2-1. COPPER MINERALS IMPORTANT IN U.S. PRODUCTION (1)

Mineral	Composition	Copper content, percent weight	Occurrence[a]
Sulfide Ores			
Chalcopyrite	$CuFeS_2$	35	SW, NW, NC
Chalocite	Cu_2S	80	SW, NW, NC
Bornite	Cu_5FeS_4	63	SW, NW
Covellite	CuS	66	SW, NW
Enargite	$Cu_3As_5S_4$	48	NW
Oxide Ores			
Malachite	$CuCO_3 \cdot Cu(OH)_2$	57	SW, NW
Azurite	$2\ CuCO_3 \cdot Cu(OH)_2$	55	SW, NW
Cuprite	Cu_2O	89	SW
Chrysocolla	$CuSO_3 \cdot 2H_2O$	36	SW
Native copper	Cu	100	NC, SW

[a] NW - Montana and surrounding area.
NC - Michigan and surrounding area.
SW - Arizona and surrounding area.

and subsequently precipitate to form secondary metal deposits. Weathering may therefore create deposits of oxidized copper minerals. The table shows four of these, the highly colored azurite and malachite being most abundant in domestic ores.

The ore deposits of northern Michigan are a unique occurrence of primary origin, and native copper mixed with sulfide minerals is mined in this area. Table 2-2 gives an analysis of the ore from this deposit. Except for the presence of elemental copper and the low-sulfur content, this analysis is similar to that of most domestic ores, since it shows iron present in much higher concentration than copper in a gangue rock of silica and alumina minerals.

The first step in the processing of an ore is to form a copper concentrate, which consists of the copper minerals separated from most of the gangue. These concentrates are an article of commerce, and represent another raw material of this industry. Ores mined primarily for other metals may be the origin of concentrates rich in copper, which are sold to copper producers. This may constitute 5 to 10 percent of all the primary copper that is mined in this country. Also, concentrates are regularly imported from other countries; domestic smelters frequently process concentrates from Canada, South America, Australia, and the Philippines.

The industry also imports copper from other countries at several intermediate stages of processing. These imports include partially smelted matte and crude anode or blister copper. Although they do not represent a large fraction of the copper consumed in this country, most copper imports are in the form of these intermediate products. A small amount of high-grade ore that has received no on-site processing is also imported.

The industry consumes other materials in various processing steps, but not in large quantities. Mining and concentrating entail use of explosives and small amounts of organic chemicals, and smelting requires limestone and silica rock as fluxing materials.

Primary copper smelting and refining, together with the primary aluminum industry, accounts for 3 percent of all energy consumed by manufacturing industries in the U.S. (2). Currently, natural gas is the fuel most heavily relied upon by copper smelters, with oil also being widely used. Energy consumption in 1974 for all copper refining and smelting operations in the U.S. was: Natural gas - 1.52×10^{13} kilocalories, Oil - 4.13×10^{12} kilocalories, and electricity - 6.82×10^{8} kilowatt-hours (2). The rapidly increasing cost of these forms of energy, and their increasing unavailability, is causing consideration of conversion to coal; however, coal is currently limited to only one or two locations.

Products

Commerce recognizes a number of different grades of copper, classified into two main groups. Relatively impure grades are directly produced in a copper smelter. These are sold for use in alloys or for other special purposes, or they may be exported to be refined elsewhere. More than 90 percent

TABLE 2-2. TYPICAL ANALYSIS OF COPPER ORE USED AT WHITE PINE COPPER COMPANY, MICHIGAN

Element	Percentage (Weight)
Cu	1.0
Ag	0.0006
Au	Trace
Al_2O_3	15.0
SiO_2	61.5
CaO	7.4
Fe	6.6
MgO	3.7
Ni	0.005
S	0.35
Pb	0.001
As	0.0005
Mo	0.002
Bi	0.0001
Mn	0.05
Zn	0.001
Na	1.5
K	1.0
Co	0.003
Se	0.0005

of the copper produced is refined in this country into one of the electrolytic grades. Table 2-3 shows the distribution of consumption of electrolytic copper in 1976. More than two-thirds of it is used directly to manufacture wire and tubing. More than half the electrolytic copper is cast at the refinery into wirebars for direct use on wire and tubing forming machines.

Several by-product elements are isolated from the copper ores. In 1976 the copper industry produced all the arsenic and selenium manufactured in this country, almost all the platinum and palladium, and almost half the gold, silver, and polybdenum. Except for molybdenum, all of these were produced as purified metals or compounds. Molybdenum was sold as concentrate, and most copper producers also reclaim zinc and lead as a concentrate. Several copper smelters recover tellurium, and one company situated near steel mills makes a high-grade iron sinter from the iron pyrite in its ore. This same company manufactures sulfuric acid as a major product, and most others have facilities to manufacture it as a by-product. Three companies produce copper sulfate, and two manufacture chemicals of a specialized nature in the same plant with their copper operations.

Table 2-4 provides the basic 1976 statistics of this industry, and Table 2-5 lists major sulfuric acid producers.

Companies

The United States is the world's largest copper producer, accounting for 20 percent of the total world production in 1976. Domestic mine output that year was estimated at 1.5 million metric tons and valued at $2.3 billion (4).

In 1976 nine companies operated 16 primary smelters and 20 companies operated 27 refineries and electrowinning plants (4). Table 2-6 lists some of these companies, with applicable data. The three largest domestic producers are Kennecott Copper Corporation, Phelps-Dodge Corporation, and ASARCO, Inc.

Most of these companies own or control domestic mines that supply at least part of their own needs. Table 2-7 lists the 25 largest copper mines operating in 1974. Twenty of these were directly owned by a producing company. At least three other large companies own mines or leaching operations intended primarily for production of copper, as do several smaller companies. The 25 listed mines produced more than 95 percent of the domestic copper in 1974. The remaining five percent of domestic copper was produced from a few smaller mines, or as by-products of other mining industries.

Several of the larger U.S. copper companies have invested substantially in copper mines and production facilities in Mexico, Peru, Chile, Canada, Republic of South Africa, and Zambia. Most of them continue also to expand their U.S. mining interests. Table 2-8 provides a survey of the expansions projected in 1976.

Other projected changes through 1985 include addition of new capacity and improvement of pollution control. Technology should not change radically

Table 2-3. CONSUMPTION OF REFINED COPPER IN 1976 (3)

Consumer	Quantity, metric tons
Wire mills	1,221,195
Brass mills	521,515
Secondary smelters	2,814
Chemical plants, foundries, and miscellaneous plants	32,659[a]

[a] Estimated.

TABLE 2-4. STATISTICAL DATA FOR THE PRIMARY COPPER INDUSTRY IN THE UNITED STATES IN 1976 (3)

Primary copper produced, thousand metric tons	
Mines, from domestic ores	1,461.81
Smelters, from domestic ores	1,325.65
Refineries, from domestic ores	1,288.77
Refineries, from foreign ore, matte, etc.	105.76
Exports, thousand metric tons	
Unmanufactured	154.20
Refined	102.40
Imports, thousand metric tons	
Unmanufactured	487.34
Refined	348.37

TABLE 2-5. PRINCIPAL BY-PRODUCT SULFURIC ACID PRODUCERS - 1974 (5)

Producer	Capacity, metric ton/year
The Anaconda Co.	
Anaconda, Montana	210,000
ASARCO, Inc.	
Corpus Christi, Texas	104,000[a]
El Paso, Texas	145,000
Hayden, Arizona	163,000
Tacoma, Washington	49,000
Cities Service Co.	
Copperhill, Tennessee	1,143,000[b]
Inspiration Consolidated Copper Co.	
Inspiration, Arizona	397,000
Kennecott Copper Corp.	
Hurley, New Mexico	181,000
Hayden, Arizona	249,000
Garfield, Utah	544,000
Magma Copper Co.	
San Manuel, Arizona	803,000
Phelps Dodge Corp.	
Ajo, Arizona	91,000
Hidalgo, New Mexico	524,000
Morenci, Arizona	544,000

[a]ASARCO - Corpus Christi smelter is no longer operating.

[b]Approximate composition is 5% smelter gases; 95% gases from pyrites.

TABLE 2-6. U.S. PRIMARY COPPER PRODUCERS (6,7)
(Conventional Smelting/Refining Operations)

Company	Location	Description	Capacity, metric ton/year (Cu content)
AMAX, Inc.	Carteret, New Jersey	Refinery	236,000
The Anaconda Company	Anaconda, Montana	Smelter	180,000
	Great Falls, Montana	Refinery	229,000
ASARCO, Inc.	Tacoma, Washington	Smelter/refinery	91,000/142,000
	El Paso, Texas	Smelter	104,000
	Hayden, Arizona	Smelter	163,000
	Amarillo, Texas	Refinery	381,000
Cerro Corporation	St. Louis, Missouri	Refinery	236,000
Cities Service Company	Copperhill, Tennessee	Smelter	20,000
Copper Range Company	White Pine, Michigan	Smelter/refinery	82,000/82,000
Inspiration Consolidated Copper Company	Miami, Arizona	Smelter/refinery	64,000/136,000
Kennecott Copper Corporation	Garfield, Utah	Smelter	254,000
	Hurley, New Mexico	Smelter/refinery	73,000/93,000
	Hayden, Arizona	Smelter	73,000
	McGill, Nevada	Smelter	45,000
	Baltimore, Maryland	Refinery	250,000
	Magna, Utah	Refinery	169,000
Magma Copper Company	San Manuel, Arizona	Smelter/refinery	181,000/181,000
Phelps Dodge Corporation	Morenci, Arizona	Smelter	161,000
	Douglas, Arizona	Smelter	115,000
	Hidalgo, New Mexico	Smelter	91,000
	Ajo, Arizona	Smelter	64,000
	El Paso, Texas	Refinery	404,000
	Laurel Hill, New York	Refinery	83,000
Southwire Company	Carrollton, Georgia	Refinery	65,000

Note: Refineries typically produce copper from both blister and scrap in varying proportions, and for this reason the U.S. Bureau of Mines does not categorize refineries as either "primary" or "secondary." In general, refineries located in Western states or adjacent to primary smelters process chiefly a blister feed, while those refineries in the East produce a higher proportion of copper from scrap.

TABLE 2-7. TWENTY-FIVE LEADING COPPER MINES IN THE UNITED STATES IN 1974 (4)

Rank	Mine	County and state	Company	Operation	Type of mining	Ore grade, percent	Annual ore tonnage, metric tons	Products	Mineralization
1	Utah Copper	Salt Lake, Utah	Kennecott Copper Corp.	A	Open pit	0.635	29,000,000	Copper, molybdenum, gold, silver, sulfuric acid, selenium, ammonium perrhate, platinum, palladium	Chalcopyrite
2	San Manuel	Pinal, Arizona	Magma Copper Co.	A	Underground	0.7	16,000,000	Cathode copper, molybdenum, electrolytic slimes, sulfuric acid	
3	Morenci	Greenlee, Ariz.	Phelps Dodge Corp.	B	Open pit	0.82	14,000,000	Copper	Copper sulfides
4	Butte operations	Silver Bow, Mont.	The Anaconda Co.	C	Open pit underground	0.7	over 10,000,000	Copper, silver, gold	
5	Tyrone	Grant, N. Mexico	Phelps Dodge Corp.	C	Open pit	0.87	over 10,000,000	Copper, gold, silver	Copper sulfides
6	Ray Pit	Pinal, Arizona	Kennecott Copper Corp.	D	Open pit	0.929	9,500,000	Copper	
7	Pima	Pima, Arizona	Cyprus Pima Co.	B	Open pit	0.49	16,500,000	Copper, molybdenum, silver	
8	White Pine	Ontanagon, Mich.	White Pine Copper Co.	A	Underground	1.0	7,000,000	Copper, silver	Chalcopyrite
9	Sierrita	Pima, Arizona	Duval Sierrita Corp.	E	Open pit			Copper, molybdenum, silver	
10	Chino	Grant, N. Mexico	Kennecott Copper Corp.	A	Open pit	0.861	6,000,000	Copper, molybdenite	Porphyry copper
11	Twin Buttes	Pima, Arizona	The Anaconda Co.	C	Open pit		over 10,000,000	Copper conc.	
12	New Cornelia	Pima, Arizona	Phelps Dodge Co.	B	Open pit	0.61	7,400,000	Copper	Copper sulfides
13	Inspiration	Gila, Arizona	Inspiration Consolidated	F	Open pit	0.71	7,000,000	Copper, silver, gold, selenium, rhenium	Chalcocite, chrysocolla, malachite, azurite

TABLE 2-7 (continued).

Rank	Mine	County and state	Company	Operation	Type of mining	Ore grade, percent	Ore tonnage, metric tons	Products	Mineralization
14	Mission	Pima, Arizona	American Smelting and Refining Co.	C	Open pit		1,000,000 to 10,000,000	Copper, silver, molybdenum	Chalcopyrite, molybdenite
15	Nevada Mines	White Pine, Nev.	Kennecott Copper Corp.	D	Open pit	0.601	6,000,000	Copper	
16	Yerington	Lyon, Nevada	The Anaconda Co.	C	Open pit		1,000,000 to 10,000,000	Copper conc.	
17	Silver Bell	Pima, Arizona	ASARCO	G	Open pit		over 10,000,000	Copper, molybdenum, silver	Chalcocite, chalcopyrite
18	Copper Cities	Gila, Arizona	Cities Service Co.	G	Open pit	0.5	3,000,000	Copper	Chalcopyrite
19	Mineral Park	Mohave, Arizona	Duval Corp.	G	Open pit	0.4149	1,000,000 to 10,000,000	Copper, molybdenum, silver	Copper, molybdenum, silver
20	Superior Div.	Pinal, Arizona	Magna Copper Co.	B	Underground	4.5	625,000	Copper conc.	Chalcopyrite, bornite, chalcocite
21	Copper Queen	Cochise, Arizona	Phelps Dodge Corp.	B	Open pit underground	0.6 4.06	1,000,000 to 10,000,000	Copper, gold Silver	Copper sulfides and oxides
22	Continental	Grant, N. Mexico	UV Industries, Inc.	B	Open pit underground		450,000 to 1,000,000	Copper, zinc	
23	Bagdad	Yavapai, Ariz.	Cyprus Mines Corp.	G	Open pit	0.7	1,900,000	Copper, molybdenum, silver	Porphyry
24	Esperanza	Pima, Arizona	Duval Corp.	G	Open pit		1,000,000 to 10,000,000	Copper, molybdenum, silver	
25	Battle Mountain Property	Lander, Nev.	Duval Corp.	B	Open pit		1,000,000 to 10,000,000	Copper, gold, silver concentrate	Copper, gold, silver

A - Mine, concentrator, smelter, refinery
B - Mine, concentrator, smelter
C - Mine, concentrator
D - Mine, concentrator, smelter, ore leach plant/precipitate plant
E - Mine, concentrator, hydrometallurgical recovery
F - Mine, concentrator, smelter, refining, leaching-electro mining plant
G - Mine, concentrator, leach plant

TABLE 2-8. 1976 SURVEY OF MINE AND PLANT EXPANSIONS IN THE UNITED STATES[a]

Company	Location	Project	Planned	Now	Units	Start	Class	Notes
Anaconda	Tooele, Utah,	UGmico	10M		tpd conc.	1979	A	Carr Fork Mine: also Mo, Ag, Au
Anamax	Twin Buttes, Ariz.,	mi/Co	120M	63M	tpy Cu		C	Weak markets render timetable questionable
Brenmac Mines	Sultan, Washington,	mi/Co	9.9M		tpy Cu		C	Proved OR: 18.59MM t 0.35% Cu, 0.04% molybdenite
Cities Service	Miami East, Ariz.,	UGmism	2M		tpd Cu ore	1978	A	OR 50MM t 1.95% Cu ore. May be some small production in 1976.
Continental Copper	Marble Peak, Ariz.,	cx	2M		tpd ore	1977	AB	OR 12MM t 2.2% Cu. Operation expects a 20-year lifespan.
Cyprus Bagdad Copper	Bagdad, Arizona,	cx	70M	20M	tpy Cu	1978	A	OR 300MM t 0.49% Cu. Smelter on site postponed.
Duval	Sierrita, Ariz.,	pl	22.5M		tpy Cu		C	Chloride leach process recovers electrolytic copper.
Magma Copper	San Manuel, Ariz.,	mi	75M	62.5M	tpd ore	1976	A	
Noranda Exploration	Rhinelander, Wisc.,	OPmi	350M		tpy ore		C	Cu/Zn mine. Dependent on environmental clearance.
Phelps Dodge	Safford, Arizona,	UGmico						OR 400MM tons of 0.72% Cu. Indefinitely postponed.

Abbreviations:

UG - underground
mi - mine
CO - concentrator
pl - plant
tpd - tons per day; tpy - tons per year
sm - smelter
cx - complex

[a] Data from U.S. Bureau of Mines.

due to the lead time required, the lack of recent innovations, and the capital intensive nature of the industry (2).

An estimated 40,000 persons are employed by the primary copper industry. Most are engaged in mining and concentrating. In 1974, industry employment was reported as 33,942 persons, of which 14,861 were in open-pit mines, 9,545 in underground mines, and 4,536 in ore concentrating mills. The copper industry is the largest single employer in Arizona, Montana, Nevada, and Utah.

Environmental Impacts

Smelting is the most important source of environmental problems in the copper industry.

Emissions of air pollutants from copper processing are of concern, especially those that are potentially hazardous to human health. Among the known trace elements of concern are arsenic and cadmium. The copper industry is a primary source of arsenic emissions, producing about 30 percent of total arsenic emissions in the United States.

Copper smelters are a major source of sulfur dioxide, emitting 80 percent of the total amount of SO_2 emitted from the copper, lead, and zinc industries. The industry is implementing control methods to recover some of the SO_2 as a marketable product. Fifteen percent of the SO_2 generated by the industry is fugitive emissions.

The industry makes extensive use of water recycle techniques. Mine wastewater may contain acid and dissolved metals. Mill tailings may also contain heavy metals. Smelter and refining wastes often contribute a heavy load of dissolved metals to the tailings pond. These wastes can affect the quality of the decant water as well as effluent volumes. Slag from the industry, which is dumped, contains many elements. Table 2-9 presents approximate quantities of selected pollutants from the U.S. primary copper industry. Primary copper smelting and fire refining produce approximately 3 metric tons of wastes containing slag, sludge, and dust (including acid plant sludge) per metric ton of product. Smelting followed by electrolytic refining produces about 2.4 kilograms of wastes per metric ton of product.

In 1974 the copper ore mining and concentrating industry produced about 651 million metric tons of solid waste, or about 85 percent of the national total for metals mining and concentrating. Of this figure, 56 percent was waste rock, 7 percent was overburden, and 36 percent was concentrator waste (7).

References

1. Mining Informational Services of the McGraw-Hill Mining Publications. 1975 E/MJ International Directory of Mining and Mineral Processing Operations. McGraw-Hill, Inc., 1975.

TABLE 2-9. ANNUAL GENERATION OF SELECTED POLLUTANTS FROM U.S. PRIMARY COPPER INDUSTRY - 1968
(metric tons)

Source	Arsenic	Percent of total[a]	Cadmium	Percent of total[a]	Copper	Percent of total[a]	Fluorides	Percent of total[a]	Lead	Percent of total[a]	Selenium	Percent of total[a]
Mining			Neg.		156	1.41			284[b]	3.72		
Roasting	741	10.07	189	7.59	2386	21.54	164	0.13	104	1.37	14	1.99
Reverberatory furnace	329	4.48	77	3.12	1023	9.23	71	0.05	44	0.58	6	0.94
Converters	946	12.87	222	8.95	3068	27.70	211	0.16	134	1.76	18	2.57
Material handling	206	2.80	49	1.96	681	6.15	47	0.04	30	0.39	5	0.59
Total	2222	30.22	537	21.62	7314	66.03	493	0.38	596	7.82	43	6.09

[a] Percent of total of this pollutant.

[b] Combined total from copper, zinc and lead mining.

2. Energy Penalty Study of the Nonferrous Metals Industry. Arthur D. Little, Inc. Draft Final Report to Policy Planning Division. U.S. Environmental Protection Agency. Washington, D.C. August 1977.

3. U.S. Department of the Interior. Bureau of Mines. Mineral Industry Surveys, Copper in 1976. Washington, D.C. April 15, 1977.

4. U.S. Department of the Interior. Bureau of Mines. Commodity Data Summaries 1977. Washington, D.C. 1977.

5. Stanford Research Institute. 1977 Directory of Chemical Producers, United States of America. Menlo Park, California.

6. U.S. Department of the Interior. Bureau of Mines. Copper - 1977. MCP-3. Washington, D.C. June 1977.

7. Development Document for Interim Final Effluent Limitations Guidelines and Proposed New Source Performance Standards for the Copper Segment of the Nonferrous Metals Manufacturing Point Source Category. EPA 440/1-75/032b. U.S. Environmental Protection Agency. Washington, D.C. November 1974.

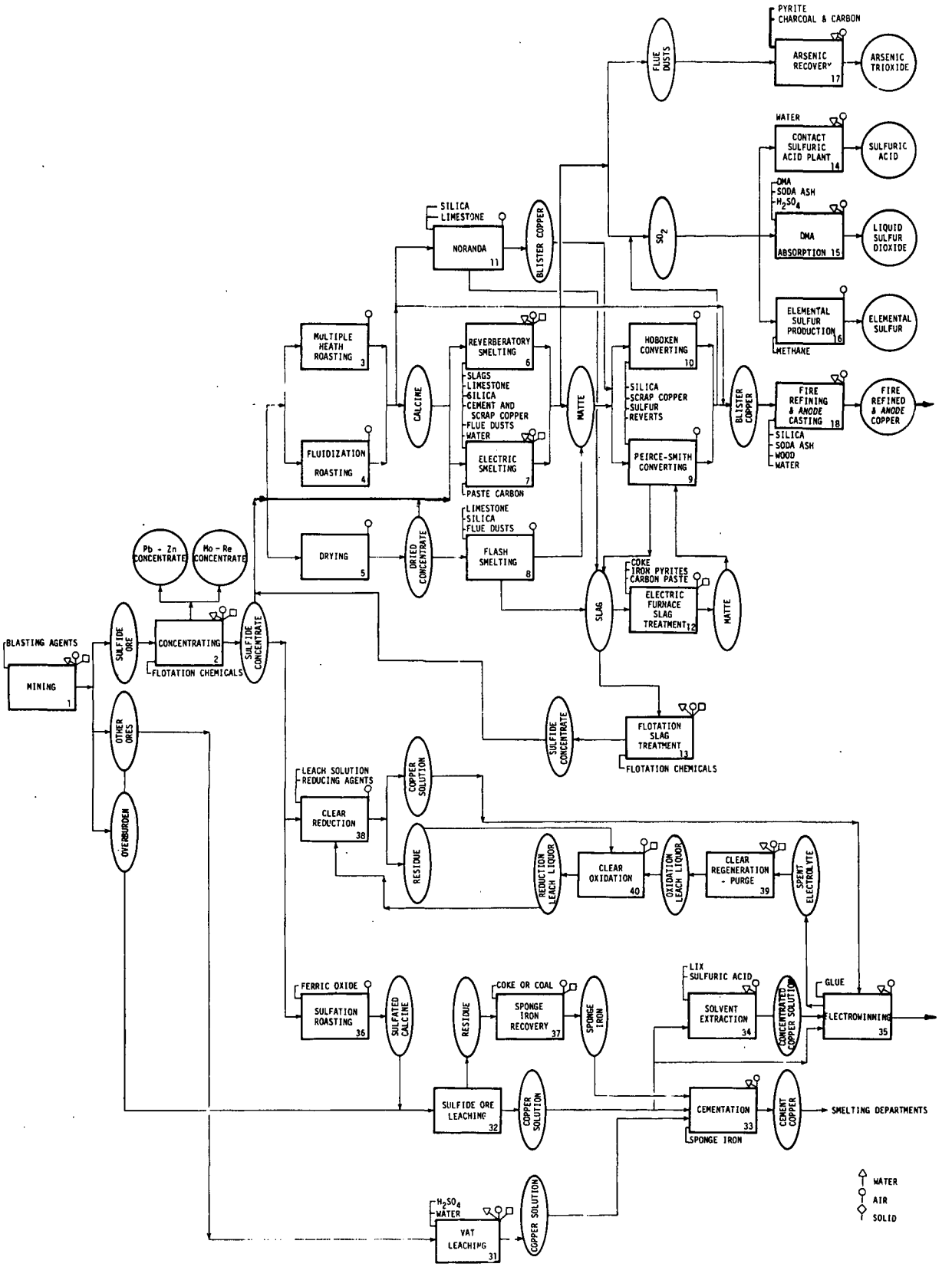

Figure 2-1. Copper industry flow sheet.

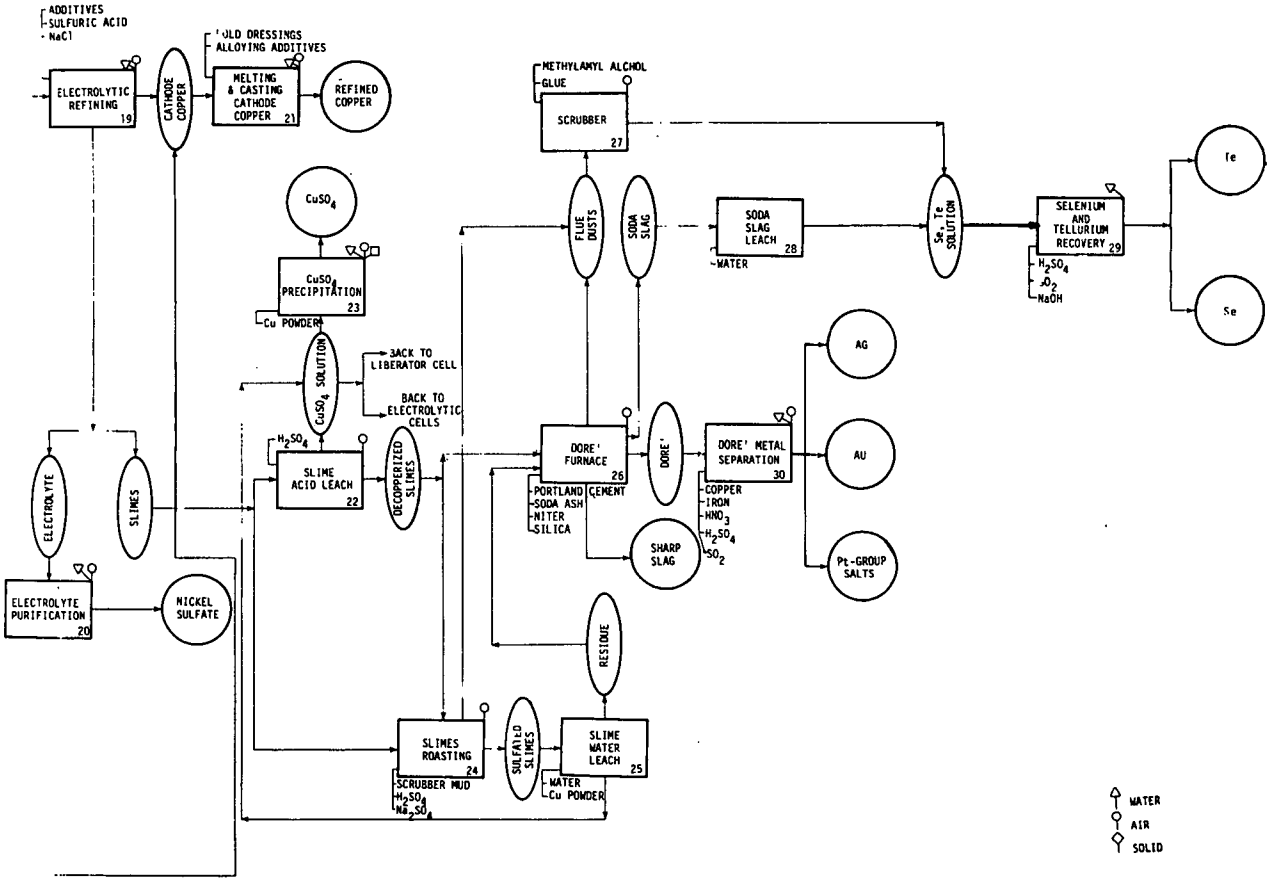

Figure 2-1. Copper industry flow sheet.

INDUSTRY ANALYSIS

The environmental impacts of many industries, including the primary copper industry, have received wide attention and have been the subject of many industrial and governmental studies. Emissions of SO_2 and their impacts on the atmosphere are considered especially important.

This industry analysis examines each individual production operation, called here a process, to examine in detail its purpose and its actual or potential effect on the environment. Each process is examined in the following aspects:

1. Function
2. Input materials
3. Operating conditions
4. Utilities
5. Waste streams
6. Control technology
7. EPA classification code
8. References

The only processes included in this section are those that are either operating in the United States, are under construction, or are currently being demonstrated on a large scale at a U.S. facility. Processes believed to be primarily in the stage of engineering development have been excluded from this listing. Many of these are considered in Section 8, Emerging Technology. Figure 2-1 is a flowsheet showing these processes, their interrelationships, and their major waste streams.

Mining

1. Function - Rock containing enough copper to justify its recovery is removed from the ground and transported to a concentrator plant. Mining methods are determined by the size, depth, and configuration of the ore body, as these are adaptable for underground or open pit mining. The capability for high productivity in large-scale open pit operations has made possible the development of large deposits of relatively low-grade porphyry ores; in 1973, 83 percent of all the ore mined in the United States came from open pits (1).

In an open pit mine, holes for placement of explosives are drilled behind the face of a near-vertical bank. Other explosives are placed in secondary drill holes. The explosives reduce the rock to sizes that can be handled by power shovels or other mechanical equipment. Shovels load the ore into trucks or railroad cars or onto belt conveyors for transportation to the concentrator plant.

2. Input Materials - Important copper ore minerals are listed in Table 2-1. Chalcopyrite, bornite, and enargite are considered the primary minerals that were formed deep underground by igneous processes. The other sulfide minerals were formed by the leaching action of underground water in the absence of oxygen. When oxygen was present, the sulfur was oxidized, and minerals such as chrysocolla, azurite, and malachite were formed. Native copper is sometimes found in these oxidized deposits.

Porphyry deposits are now the major source of the world's copper. Porphyry is the term applied to the type of deposit in which the copper minerals are uniformly distributed throughout a rock composed of other minerals. The copper content is between 0.6 and 2 percent (2). The copper ores of southwestern United States are from porphyry deposits.

Explosives used in copper mining are almost always a mixture of ammonium nitrite and fuel oil (AN-FO). Some mines add sodium nitrate to make the explosive slightly more powerful (3). No values are available for the consumption of these explosives.

3. Operating Conditions - Most copper ores are mined in the arid regions of the West or Southwest where open pit operations continue through both hot and cold weather. Other mining operations in Michigan and Tennessee are underground mines where more constant temperatures prevail.

4. Utilities - In most mines, electrically operated power equipment is used for drilling, loading, and hauling. In 1973, 1.02 kilowatt-hours of electricity was consumed by the mining process per kilogram of copper produced (4).

A small amount of water is needed for equipment cooling, drill lubrication, dust control spraying, equipment washing, and sanitary facilities. Occasionally the water sent to the mine is reused water from the concentrator plant or tailings pond.

5. Waste Streams - Mining operations generate fairly large amounts of dust from drilling, blasting, loading, and transporting operations. One estimate of 110 grams of fugitive dust per metric ton of ore mined is given as the average for several types of nonferrous mining (5). The dust composition is dependent on the character of the ore being mined, and there is a large variation in particle size.

Wastewater from copper mining comes from seepage or runoff from the mine or spoil dumps, and from the water sent into the mine for utility uses. Improper backfill operations may result in acid drainage. The amount of wastewater from open pit copper mines range from zero to 0.3 cubic meter of water per metric ton of ore mined. From underground mines, the amount ranges from 0.008 to 4.0 cubic meter per metric ton of ore (6). Chemical characteristics are typical of those from any sulfide mine, as described in a later section of this report. Table 2-10 gives analyses of waters from two copper mines.

Large amounts of solid wastes are generated in a mining operation. Overburden stripped to uncover an ore body, shaft and tunnel spoil, and low-grade ore (less than 0.4% copper) found within the mine are disposed of near the mine. The amount varies widely, from as little as 0.004 metric ton per metric ton of ore up to 15 metric tons per metric ton of ore mined. Average quantities in 1973 were reported as 2.65 metric tons per metric ton for open pit mines, and 0.13 metric ton per metric ton for underground mines (7). These spoils contain small and varying amounts of copper minerals, sometimes minerals of other metals, and large amounts of the native rock of the region. Concentrations of most materials do not exceed background levels (8).

6. Control Technology - The only control provided for fugitive dust is the manual use of water sprays, to be used when needed. Dust from blasting can be controlled by proper blast design. Most open pit copper mines are very large, with sufficient natural ventilation that dust conditions are not unbearable.

Mining companies attempt to locate spoil dumps where natural seepage will not contaminate a stream or underground aquifer. Otherwise there is little control of these solid wastes in the copper industry. There is no control of blowing dust and no attempt to reclaim the dump areas (9).

Mine water wastes and seepage from the spoil dumps are major potential sources of water pollution from the primary copper industry. Although treatment of these wastes is discussed in detail in the section covering all sulfide mines, two characteristics of copper mines differ from those in the lead and zinc industries. First, their location greatly simplifies control of water discharges. All of the large open pit mines are in regions of deficient rainfall, and some are in desert areas. Natural evaporation within the pit greatly reduces the volume of wastes that must be pumped out, and seepage from spoil dumps rarely enters a stream. The water that accumulates is in many cases disposed of merely by pumping it onto a nearby flat area, where it either seeps into the alkaline soil or evaporates. It is likely that most of the dissolved metals are converted to insoluble compounds by this process, and officials of several mining companies state that they have

TABLE 2-10. RAW WASTE LOAD IN WATER PUMPED FROM SELECTED COPPER MINES (7)

Parameter	Underground mine		Open-pit mine	
	Concentration (mg/ℓ)	Raw waste load per unit ore mined kg/1000 metric tons	Concentration (mg/ℓ)	Raw waste load per unit ore mined kg/1000 metric tons
Flow	3,815.3 m^3/day	17.28 m^3/1000 metric tons	409 m^3/day	75 m^3/1000 metric tons
pH	7.37[a]	7.37[a]	6.96[a]	6.96[a]
TDS	29,250	5,053.9	1,350	101
TSS	69	11.9	2	0.2
Oil & grease	<1.0	<0.173	7	0.5
TOC	<4.5	<0.778	10	0.75
COD	819	141.5	4	0.3
B	2.19	0.378	0.07	0.005
Cu	0.87	0.150	1.05	0.08
Co	<0.04	<0.007	<0.06	<0.005
Se	<0.077	<0.013	0.096	0.007
Te	0.60	0.104	<0.2	<0.02
As	<0.07	<0.012	<0.01	<0.0008
Zn	2.8	0.484	0.1	0.008
Sb	<0.5	<0.086	<0.5	<0.04
Fe	<0.1	<0.017	<0.1	<0.008
Mn	2.22	0.384	0.9	0.07
Cd	<0.02	<0.003	<0.03	<0.002
Ni	<0.05	<0.009	<0.05	<0.004
Mo	<0.5	<0.086	<0.2	<0.02
Sr	119	20.6	0.8	0.06
Hg	<0.0001	<0.00002	<0.0001	<0.000008
Pb	<0.1	<0.017	<0.5	<0.04

[a]Value in pH units

shown that none of these waters has entered underground supplies. In the vicinity of some of these mines, copper, zinc, selenium, and arsenic are detected in analysis of water from springs and wells, in concentrations usually less than 0.1 milligrams per liter; it is not clear whether this amount exceeds the natural concentrations in a highly mineralized region (1). These alkali waters naturally have total dissolved solids that can be several thousand milligrams per liter.

Near some copper mines, the practice of leaching low-grade ore is being practiced. This practice and its effect in the control of mining wastewaters is described in the section outlining Process No. 32, Sulfide Ore Leaching.

7. EPA Source Classification Code - None

8. References -

1. Mineral Facts and Problems, Washington, D.C. U.S. Department of the Interior, Bureau of Mines, 1970.

2. Hallowell, J.B. et al. Water Pollution Control in the Primary Nonferrous Metals Industry - Volume I. Copper, Zinc, and Lead Industries. EPA-R2-73-274a. U.S. Environmental Protection Agency, Washington, D.C. September 1973.

3. Encyclopedia of Chemical Technology. Interscience Publishers, a division of John Wiley and Sons, Inc., New York. 1967.

4. Energy Consumption in Domestic Primary Copper Production, U.S. Bureau of Mines.

5. Davis, W.E. National Inventory of Sources and Emissions: Copper, Selenium, and Zinc. PB-210 679, PB-210 478, and PB-210 677. U.S. Environmental Protection Agency. Research Triangle Park, North Carolina. May 1972.

6. Development Document for Interim Final and Proposed Effluent Limitations Guidelines and New Source Performance Standards for the Ore Mining and Dressing Industry. Point Source Category Volumes I and II. EPA/1-75/032-6. Environmental Protection Agency, Washington, D.C. February 1975.

7. Minerals Yearbook. U.S. Department of the Interior, Bureau of Mines., Washington, D.C. 1973.

8. A Study of Waste Generation, Treatment and Disposal in the Metals Mining Industry. PB 261-052. Midwest Research Institute for Environmental Protection Agency. Washington, D.C. October 1976.

9. Dayton, S. The Quiet Revolution in the Wide World of Mineral Processing. Engineering and Mining Journal. June 1975.

Concentrating

1. Function - Sulfide ore from the mine is separated by the concentration process into two or more fractions. The fractions rich in valuable minerals are called concentrates, and the waste rock, low in metals content, is called the gangue. With this process, ore that usually contains less than 1 percent copper is concentrated into a fraction analyzing from 20 to 30 percent copper. At least 85 percent of the ore copper content is recovered in the concentrate.

Concentrating consists of milling the ore, crushing and grinding it to a fine powder, and then separating the minerals by froth flotation. In milling, the ore is sent through crushers and then through fine grinders. Between stages, the ore is classified (screened), and the final milled product is a mixture of particles between 65 and 200 mesh.

In the last stages of milling, water is added along with chemicals to condition the ore for froth flotation.

Flotation is a continuous process that uses compressed air and various flotation chemicals to separate the ore into fractions. By proper selection of additives, certain minerals are caused to float to the surface and are removed in a foam of air bubbles, while others sink and are carried out with the slurry. The ore passes through many flotation stages in order to accomplish this separation. The chemicals that are added are classified as "frothers", which create the foam; "collectors", which cause certain minerals to float; and "depressants", which cause certain minerals to sink.

In the flotation of copper ores, the frothers most often used are reportedly pine oils, cresylic acid, or long-chain alcohols (1). Lime is usually added in the final stages of grinding, both to adjust the pH of the slurry to an optimum level and to act as a depressant for iron pyrite. In this application it is often used in conjunction with cyanide (1). Various xanthates or dithiophosphates act as collectors for the valuable sulfide minerals, and the copper and other recoverable minerals come off with the froth (2). The gangue does not float and is discarded as "tailings".

After initial separation, the valuable minerals are sent through stages that further separate them by selective or differential flotation. By use of proper collectors or depressants, the concentrates may be upgraded to remove more iron pyrite. In some cases, other fractions high in lead and zinc, or molybdenum and rhenium, may be produced. These are usually sold to processors in the industries handling those metals. The copper ores of the west are a prime source for molybdenum; to separate this fraction, the concentrate must be steam stripped to remove the collector originally added (3).

Occasionally, a concentrator will batch-treat a copper concentrate with cyanide to dissolve its silver and gold content. After separating the leached

solution from the concentrate, zinc metal is added to reprecipitate the precious metals.

Concentrates are dewatered by clarification and filtration. They may be partially dried to simplify handling and shipment, or may be more completely dried for direct "green" feed to a smelting furnace (see Process No. 5). Ten of the sixteen conventional smelters in this country have concentrator plants on-site or nearby (4).

Table 2-11 shows typical composition of copper concentrates; compositions vary with the character of the ore and the amount of processing employed.

2. Input Materials - Only sulfide ores of copper can be successfully separated by the flotation process. Oxidized ores are treated by hydrometallurgical processes (see Process No. 31).

Lime is used for pH adjustment and as a pyrite depressant. Quantities added vary between 0.9 and 18.0 kilograms per metric ton of ore processed (5). Pine oil frothers are usually consumed at a rate of about 0.09 kilogram per metric ton of ore (5). No data are available on the quantities of long-chain alcohols or cresylic acid required if they are substituted for pine oil.

Table 2-12 lists some of the chemicals that are used as collectors in the flotation process. The use and quantity of any one of these materials depends on the mineral assemblage particular to each ore type. Alkyl-based organic molecules are more commonly used than aryl compounds.

Miscellaneous compounds such as cyanides, zinc dust, various filter aids, and inorganic salts are occasionally used in small quantities.

3. Operating Conditions - Most portions of this process are carried out at ambient temperatures in closed buildings. At few points temperatures may approach 100°C (i.e., steam stripping for molybdenite concentration). Occasionally circulating streams are heated slightly to retain efficiency during cold weather.

4. Utilities - In 1973, usage of water at 21 copper concentrators ranged from about 100 to 500 cubic meters of water per metric ton of concentrate produced, the amount depending on the complexity of the process employed (4). In the same year, concentrators consumed about 6630 million kilowatt-hours of electricity, which is about 400 kilowatt-hours per metric ton of primary refined copper (2,6). The greater part of this electricity was used to operate the crushing and grinding equipment, with a smaller amount for production of compressed air.

5. Waste Streams - The handling and milling of dry ore is the principal source of air pollutants in this process. Items of equipment are always enclosed, but transitions between pieces of equipment are difficult to seal tightly. Ore classifiers are not always completely sealed. Dust quantity is reported as about 1 kilogram per metric ton of ore (3).

TABLE 2-11. ANALYSIS OF COPPER CONCENTRATE (7)

Element	Composition, % weight
Cu	20 - 50
S	30 - 38
Pb	tr. - 0.67
Fe	20 - 30
Zn	0.2 - 4.0
Ag	0.13
Au	31.5[a]
Pt etc.	tr.
Pd	tr.
As	tr. - 4.0
Sb	tr. - 0.36
Bi	tr. - 0.05
Se	tr. - 0.03
Te	tr.
Re	tr.
Ni	tr. - 0.1
Co	tr. - 0.02
Cd	tr. - 0.01
In	tr.
Ge	tr.
Sn	tr.
Cl	0.05
F	0.05
Al	Varies
Si	Varies
Ca	Varies
Mg	tr.
Mo	tr.
Mn	tr.
Flotation reagents	tr.

[a] Value for Au in grams/metric ton.

tr. = trace

TABLE 2-12. TYPICAL FLOTATION COLLECTORS (2)

Type	Formula[a]
Xanthate	ROCSSNa
Dithiophosphate	$(RO)_2PSSNa$
Dithiocarbamate	$R_2NCSSNa$
Thiol (mercaptan)	RSH
Thiocarbanilide	$(C_6H_5NH)_2CS$
Fatty acid soaps	RCOONa
Arenesulfonate or alkylarenesulfonate	RSO_3NA
Alkyl sulfate	$ROSO_3Na$
Primary amine	RNH_3Cl
Quaternary ammonium salt	$RN(CH_3)_3Cl$
Alkylpyridinium salt	$RC_5H_4N \cdot HCl$

[a] R is the abbreviation for an alkyl group such as $CH_3(CH_2)_n$. Although alkyl compounds are common, alkyl aryl compounds may also be used, as in alkylarenesulfonates.

This process produces the largest amount of wastewater in the industry. The ore flotation water is used to sluice the tailings into a pond, and suspended solids are the most critical pollutant in concentrator effluent (8). Although part of the water is recycled to the plant, the remainder is discarded. Character of the wastewater is discussed in more detail in the section of this report that examines effluent from the concentrators of all sulfide mining industries. Excluding the amount lost by evaporation in the tailings pond, the volume of wastewater from this process will equal the water consumption, ranging from 100 to 500 cubic meters per metric ton of concentrate (3). In many cases in the Southwest, evaporation may equal consumption.

Reported analyses indicate that the water from the concentrator may contain up to 3500 milligrams per liter of dissolved solids, from 0.01 to 0.1 milligram per liter of cyanides, and ranges of metallic elements indicated in Table 2-13 (3).

The water may also contain thiosulfates and thionates, and the materials, both inorganic and organic, used as flotation additives.

More than 95 percent of all the ore brought from the mine is discharged from this process as tailings; this quantity totals approximately 241 million metric tons of waste material each year from the industry (2,6,9). Tailings are composed primarily of the common rock-forming minerals, but they also contain around 15 percent of the heavy metals originally found in the ore, and usually much of the iron pyrite. Production of higher-grade concentrates to minimize air pollution has increased the proportion of pyrites in the tailings. In this solid waste, the minerals have been pulverized and intimately mixed, and are therefore subject to weathering much more rapidly than rock masses of similar composition. They form a soil that is usually highly acidic and that contains no plant nutrients.

6. Control Technology - Dust from the milling operations is generally reduced by drawing air through the equipment and collecting the dust with cyclone separators. This is both a dust control and an integral part of the process since it allows these small particles to bypass one or more crushing and grinding operations. Fugitive dust is usually uncontrolled unless the amount being lost economically justifies the installation of equipment for its recovery.

Control of wastewater is discussed in more detail in following sections. This waste, although it is the major one, is rarely controlled independently, since waters from many sources find their way into the tailings pond. Occasionally this source is kept separate; the pond itself represents one stage of treatment.

Disposal of the tailings is a major problem in this industry. As the tailing pond becomes filled with solids, the pond is abandoned or the tailings may be dredged or mechanically moved into a pile and the pond reused. There is no universal solution for disposal of such vast quantities of solid materials; each concentrator plant requires separate study. Problems of sec-

TABLE 2-13. METALLIC ELEMENTS IN CONCENTRATOR WASTEWATER (3)

Element	Concentration, mg/l
Arsenic	0.07 approximately
Antimony	0.2 to 1.0
Cadmium	0.02 to 0.05
Copper	0.08 to very high
Cobalt	0.04 to 1.68
Iron	0.1 to 2.0
Manganese	0.05 to 4.8
Mercury	0.001 to 0.05
Molybdenum	0.2 to 20
Nickel	0.05 to 3
Lead	0.01 to 3
Selenium	0.003 to 0.02
Silver	0.1 approximately
Strontium	0.03 to 2.5
Zinc	0.05 to 8.50

ondary pollution of water are discussed in the section on water managment from all sulfide concentrating plants.

7. EPA Source Classification Code - None

8. References -

1. Hawley, John R. The Use, Characteristics and Toxicity of Mine-Mill Reagents in the Province of Ontario. Ontario Ministry of the Environment. Toronto, Ontario. 1977.

2. Encyclopedia of Chemical Technology. Interscience Publishers, a division of John Wiley and Sons, Inc., New York. 1967.

3. Hallowell, J.B. et al. Water Pollution Control in the Primary Nonferrous Metals Industry - Volume I. Copper, Zinc, and Lead Industries. EPA-R2-73-274a. Environmental Protection Agency, Washington, D.C. September 1973.

4. Development Document for Interim Final and Proposed Effluent Limitations Guidelines and New Source Performance Standards for the Ore Mining and Dressing Industry. Point Source Category Volumes I and II. EPA/1-75/032-6. U.S. Environmental Protection Agency, Washington, D.C. February 1975.

5. Development Document for Interim Final Effluent Limitations, Guidelines and Proposed New Source Performance Standards for the Lead Segment of the Nonferrous Metals Manufacturing Point Source Category. EPA 440/1-75/032-a. U.S. Environmental Protection Agency, Washington, D.C. February 1975.

6. Dayton, J. The Quiet Revolution in the Wide World of Mineral Processing. Engineering and Mining Journal. June 1975.

7. Little, A.D. Economic Impact of New Source Performance Standards on the Primary Copper Industry: An Assessment. C-76072-20. U.S. Environmental Protection Agency, Washington, D.C. October 1974.

8. Williams, Roy E. Waste Production and Disposal in Mining, Milling, and Metallurgical Industries. Miller Freeman Publications, Inc. San Francisco. 1975.

9. Minerals Yearbook. Washington, D.C. U.S. Department of the Interior, Bureau of Mines, 1973.

Multiple-Hearth Roasting

1. Function - Roasting is frequently the first of the pyrometallurgical processes applied to the copper ore concentrate at the copper smelter. The purpose of roasting is to reduce the sulfur content so that subsequent processes operate efficiently. Roasting also removes the water from the concentrate, volatilizes some of the arsenic and antimony, and preheats the ore before it is charged as calcined feed to the reverberatory furnace.

Roasting is accomplished either with a multiple-hearth or fluidization process (See Process No. 4). Another alternate is the Noranda process (Process No. 11), which combines most of the functions of roasting, smelting, and converting. In the multiple-hearth roaster, concentrate is introduced at the top of a cylindrical vessel fitted with a series of round horizontal trays, or hearths. The ore is raked across each hearth in turn until it is discharged from the bottom of the cylinder. Air is admitted into the roaster, along with a fuel if necessary to maintain adequately high temperature.

Most of the chemical reactions that occur in the roaster are with the pyrite in the concentrate rather than with the copper minerals. Copper has a higher affinity for sulfur, whereas iron combines preferentially with oxygen. Admitting a limited amount of air, therefore, causes the pyrite to oxidize, producing iron oxide and sulfur dioxide gas (1).

The heat of the roasting process generally vaporizes much of the arsenic and some of the antimony and other elements in the ore, and these "fumes" leave the roaster with the SO_2 gas.

Multiple-hearth roasting is currently in use at four domestic copper smelters. The roasters are built to handle from 125 to 650 metric tons of concentrate per day (2). There appears to be a trend away from their use except in "custom" smelters since with higher-grade concentrates the cost of operation frequently outweighs the benefits realized (1). Custom smelters may require multiple-hearth roasters, as the longer residence time and more moderate rate of temperature change may be advantageous in the separation of certin impurities, such as arsenic.

2. Input Materials - Copper concentrate, as received from the copper concentrator, is the only input. Composition is shown in Table 2-11 (Process No. 2).

3. Operating Conditions - Multiple-hearth roasters generally operate at temperatures from 760°C on the bottom hearth down to around 200°C on the top hearth (3). The roaster operates at approximately atmospheric pressure.

4. Utilities - With the concentrates now being used, some fuel in the form of oil or natural gas is always required. If concentrates are especially high in sulfur content (24 percent or more), sufficient heat is released by the burning sulfur and supplemental fuel is required only to preheat the

roaster at start-up (autogenous roasting). A reported energy requirement is 280,000 kilocalories per metric ton of copper produced (4).

Air is circulated through a hollow shaft that drives the rake arms to prevent damage to mechanical bearings and seals.

Electricity is used to drive the roaster rakes and for auxiliary materials handling equipment. Approximately 5700 kilowatt-hours is required for a plant of 100,000 metric tons of copper per year capacity (5).

5. Waste Streams- Gases leaving most multiple-hearth roasters are too weak in SO_2 gas for direct use by a sulfuric acid plant unless the inlet air can be enriched in oxygen or unless air infiltration is reduced. The SO_2 concentration is variable, being dependent upon the required degree of sulfur removal and the amount of fuel necessary to maintain roasting temperatures. With lower-grade concentrates, 20 to 50 percent of the total SO_2 generated by smelter facilities once came from the roaster. Since fuel gas was not required, the emissions contained from 5 to 10 percent SO_2 (6). Published data on current operations are inconsistent and contradictory; recent reports give SO_2 concentrations in emissions from roasters at 0.5 to 2 percent (2,7,8,9,10,11,12). Gas from roasting is a steady stream, however, and if sufficiently concentrated in SO_2 is otherwise suitable for sulfuric acid manufacture.

Emissions of particulate matter from most multiple-hearth roasters are little affected by operational changes. About 75 kilograms of particulates is produced per metric ton of copper produced (5,9,10,11,13). Fifteen percent is present in sizes below 10 microns (14). Table 2-14 presents typical particle-size profiles. Although composition is dependent on the ore, particulates may be expected to contain the more volatile elements, such as arsenic, antimony, selenium, zinc, mercury, bismuth, rhenium, and lead. These will leave the roaster as vaporized materials. Some copper and iron will be physically carried over by the gas stream. Table 2-15 gives a weight analysis of particulate and fume emissions from a multiple-hearth roaster. Table 2-16 lists the typical levels of volatile metals found in copper ore concentrates. These metals apparently appear in these dusts as sulfates, sulfides, oxides, chlorides, and fluorides, but it is not known which of the metals is combined with each negative radical. There are significant fugitive emissions of dust and fume at some multiple-hearth roasters.

The multiple-hearth roaster produces no liquid wastes.

Any organic materials that enter the roaster with the copper concentrates are vaporized or decomposed in the roaster.

6. Control Technology - At present, none of the operating multiple-hearth roasters is equipped with controls for SO_2 emissions. The only suitable controls are the various scrubbing systems, as outlined for reverberatory furnace gases (Process No. 6).

TABLE 2-14. TYPICAL SIZE PROFILE OF MULTIPLE-HEARTH COPPER ROASTER EMISSIONS (15)

Size, microns	Percent by weight
Entrained particles, carried from the roaster as solids.	
230 - 218	4.6
149 - 230	4.0
100 - 149	5.3
74 - 100	7.4
44 - 74	10.6
28 - 44	12.8
20 - 28	6.8
10 - 20	8.0
< 10	10.5
Sublimed particles, condensed from metallic vapor.	
0.5 - 10	30.0

TABLE 2-15. CONCENTRATION AND WEIGHT ANALYSIS OF PARTICULATE EMISSIONS FROM A MULTIPLE-HEARTH COPPER ROASTER (15)

Concentration	Emission	
	Chemical	% Weight
Entrained particulates	Cu	23.8 - 34.5
1.4 g/Nm^3	Fe	21.2 - 30.7
	S	1.7 - 2.5
	As	tr.
	Sb	tr.
	Pb	tr.
	Zn	tr.
	Sn	tr.
	Cd	tr.
	Ni	tr.
	Mn	tr.
	Se	tr.
	SiO_2, CaO	10 - 15
	$CaSO_4$	
	O_2 (oxides)	13 - 19
	inerts	0.8
Sublimed particulates	As_2O_3	tr. - 17
0.6 g/Nm^3	Sb_2O_3	tr. - 13
	inerts	tr.

TABLE 2-16. TYPICAL LEVELS OF VOLATILE METALS IN DOMESTIC COPPER ORE CONCENTRATIONS (6)

	Concentration level	Percent of concentrates surveyed
Lead	<5000 ppm	96
	5000 ppm-<2%	2
	≥2%	2
Zinc	<1%	67
	1-<4%	1
Arsenic	200-1000 ppm	88
	1000 ppm-1%	10
	>1%	2
Cadmium	<1000 ppm	100
Beryllium	<10 ppm	100
Vanadium	<100 ppm	100
Antimony	<200 ppm	97
	>200- 500 ppm	3
	>5000 ppm	1/2
Tin	<1000 ppm	100

The proposal has been made that enrichment of the air to a roaster with oxygen would increase its SO_2 content to a level where it could be used as feed to a sulfuric acid plant. This proposal has been rejected on several grounds by smelter operators. Most multiple-hearth roasters cannot mechanically withstand the high temperatures caused by oxygen enrichment. One company that recovers arsenic from flue dusts maintains that oxygen enrichment causes the arsenic to oxidize to As_2O_4 and prevents its removal by current techniques (16).

A variety of devices are used in various combinations for control of particulate emissions. Larger particulates are occasionally separated with cyclone collectors or with "balloon flues." The latter are oversized ducts in which flue gas velocity is reduced enough that the particles settle by gravity. Removal efficiency is 30 to 60 percent (16). Cyclones can remove 80 to 85 percent of the solids, but require an addition of energy to compensate for pressure drop. Smaller particles in the gas stream are separated by hot gas electrostatic precipitators, or the gas may be cooled with water sprays before entering an ESP unit or a baghouse. As described further in the Air Management Section of this report, control is not complete, especially in regard to sublimed particles and fugutive losses.

The collected dusts are returned to the metallurgical processing, usually to the smelting furnace. One smelter extracts arsenic trioxide before returning the dusts to the furnace. Excessive accumulation of impurities causes dusts to be discarded, but the means of disposal have not been reported.

7. EPA Source Classification Code - 3-03-005-02

8. References -

1. Encyclopedia of Chemical Technology. Interscience Publishers, a division of John Wiley and Sons, Inc., New York. 1967.

2. Compilation and Analysis of Design and Operation Parameters for Emission Control Studies. Pacific Environmental Services, Inc. (Individual draft reports.).

3. Control of Sulfur Oxide Emissions in Copper, Lead, and Zinc Smelting. Bureau of Mines Information Circular 9527, 1971.

4. Fejer, M.E. and Larson, D.H. Study of Industrial Uses of Energy Relative to Environmental Effects. U.S. Environmental Protection Agency. Research Triangle Park, North Carolina. July 1974.

5. Jones, H.R. Pollution Control in the Nonferrous Metals Industry. Noyes Data Corporation. Park Ridge, New Jersey. 1972.

6. Background Information for New Source Performance Standards: Primary Copper, Zinc, and Lead Smelters. Volume I, Proposed Standards. EPA-450/2-74-002a. U.S. Environmental Protection Agency, Research Triangle Park, North Carolina. October 1974.

7. Copper Smelters. In: Compilation of Air Pollutant Emission Factors, Second Edition. AP-42. U.S. Environmental Protection Agency, Research Triangle Park, North Carolina. April 1973.

8. Donovan, J.R. and P.J. Stuber. Sulfuric Acid Production from Ore Roaster Gases. Journal of Metals. November 1967.

9. Exhaust Gases from Combustion and Industrial Processes, Engineering Science, Inc., Washington, D.C. October 2, 1971.

10. High, M.D., and M.E. Lukey. Exhaust Gases from Combustion and Industrial Processes. PB-204 861. U.S. Environmental Protection Agency, Durham, North Carolina. October 1971.

11. Measurement of Sulfur Dioxide, Particulate and Trace Elements in Copper Smelter Converter and Roaster/Reverberatory Gas Streams. EPA 650/2-74-111. U.S. Environmental Protection Agency, Washington, D.C. October 1974.

12. Systems Study for Control of Emissions Primary Nonferrous Smelting Industry. Arthur G. McKee & Co. for U.S. DHEW. June 1969.

13. Vandegrift, A.E., L.J. Shannon, P.G. Gorman, E.W. Lawless, E.E. Salless, and M. Reichel. Particulate Pollutant System Study - Mass Emissions, Volumes 1, 2, and 3. PB-203 128, PB-203 522, and PB-203 521. U.S. Environmental Protection Agency, Durham, North Carolina. May 1971.

14. Goldeberg, A.J. A Survey of Emissions and Controls for Hazardous and Other Pollutants. EPA-R4-73-021. U.S. Environmental Protection Agency, Washington, D.C. February 1973.

15. Duncan, L.J., and E.L. Keitz. Hazardous Particulate Pollution from Typical Operations in the Primary Nonferrous Smelting Industry. Presented at the 67th Annual Meeting of the Air Pollution Control Association. Denver, Colorado. June 9-13, 1974.

16. Personal communication, A.D. Little Company.

Fluidization Roasting

1. Function - The function of fluidization roasting is the same as for multiple-hearth roasting (Process No. 3): to reduce the sulfur content of the concentrate and to oxidize some of the iron, so that the matte produced in the smelting process can be treated most efficiently in the copper converter. Roasting also volatilizes some impurities and preheats the reverberatory feed. The roasted concentrate to be smelted is called calcined feed.

The fluidization roaster is the pyrometallurgical application of the fluidized-bed principle that has revolutionized so many operations in other industries over the past 30 years. It is based on the discovery that particles of a solid added to a gas stream moving vertically upward at just the right velocity take on many of the characteristics of an agitated liquid. Each particle of the solid is in constant agitated motion, separated from all other particles, and is in intimate contact with the gas stream. Any chemical reaction that takes place between the solid and the gas happens very quickly, with no cold pockets or hot spots.

In the fluidization roaster, the gas is a recycled stream of flue gas, into which regulated streams of air and fuel gas are introduced. The solid is copper concentrate, continuously being fed and overflowing the fluidization vessel. Both the fuel and the oxygen are completely consumed; by elimination of excess air, the SO_2 content of the flue gas stream is greatly increased, to a concentration great enough for feed to a sulfuric acid plant.

If the sulfur content of the concentrate is high enough, fuel is needed only at start-up. With 20 percent sulfur in the feed, sufficient heat is released by the sulfur to make additional fuel unnecessary. Operators of fluidization roasters, therefore, find it best not to process the ore into super-quality concentrates, but to tailor the quality of the concentrate to match the requirements of the roaster. Fluidization roasters may not provide sufficient residence time for volatilization of certain substances such as arsenopyrites.

Three domestic copper smelters have adopted fluidization roasting (1). Being complex and highly instrumented units, they must be capable of large throughput to justify the investment. Units with capacities from 700 to 1500 metric tons per day are in use (2).

2. Input Materials - Copper concentrate is the only input, usually blended or produced to a quality that the roaster can most economically process. The concentrate may be pelletized or granulated before being fed to the roaster.

3. Operating Conditions - Because of the thorough mixing in the fluid bed, temperature is held constant in all portions of the bed in the range of 650° to 750°C. The pressure in the bed is slightly above atmospheric, and in portions of the recycle stream the pressure may be 1 kilogram per square centimeter or more.

4. Utilities - The major utility used is electricity to compress the recycled gas, to inject air, and to operate auxiliary devices. No estimates of power consumption are published.

Fuel gas is the usual source of heat for starting the charge, although some plants have fuel oil facilities for standby. Quantity consumed is small.

Oxygen enrichment facilities are being considered for some of these units in order to provide more operating flexibility.

5. Waste Streams - Fluidization roasters are always fitted with cyclone separators that catch the large amounts of dust that rise from the bed. The dust is returned to the bed. Dust quantities can be as much as 75 percent of the feed (2,3). The cyclones are most properly considered as part of the process, and the waste stream considered the outlet of the cyclones. This waste stream contains particulates and fumes of the same chemical character as those from a multiple-hearth roaster (Process No. 3); they are rich in volatile elements such as arsenic and contain considerable copper. Data on total quantities of dust are not available; they are likely to be greater than emissions from a multiple-hearth roaster because of the more complete separation of smaller particles from the body of the charge.

Sulfur dioxide concentrations in the gas from the fluidization roaster are reported to be from 12 to 16 percent (2,4,5).

The roasting operation produces no liquid or solid wastes.

6. Control Technology - All the smelters that operate fluidization roasters use the SO_2 for production of sulfuric acid. Except for other processing to recover liquid SO_2 or elemental sulfur, this is the only known technology with which to dispose of such a concentrated gas stream.

Almost complete removal of particulates is required before the gas is introduced into a sulfur recovery process. Electrostatic precipitators and wet scrubbers are in use with the operating fluidization roasters. Since the dusts and condensed fumes contain valuable materials, they are normally returned to the pyrometallurgical processing units, usually to the reverberatory furnace, but some may be discarded.

7. EPA Source Classification Code - 3-03-005-02

8. References -

1. Development Document for Interim Final Effluent Limitations Guidelines and Proposed New Source Performance Standards for the Primary Copper Smelting Subcategory and the Primary Copper Refining Subcategory of the Copper Segment of the Nonferrous Metals Manufacturing Point Source Category. EPA 440/1-75/032-b. U.S. Environmental Protection Agency, Washington, D.C. February 1975.

2. Jones, H.R. Pollution Control in the Nonferrous Metals Industry. Noyes Data Corporation, Park Ridge, New Jersey. 1972.

3. McAskill, D. Fluid Bed Roasting: A Possible Cure for Copper Smelter Emissions. Engineering and Mining Journal. p. 82-86. July 1973.

4. Compilation and Analysis of Design and Operation Parameters for Emission Control Studies. Pacific Environmental Services, Inc. (Individual draft reports).

5. Background Information for New Source Performance Standards: Primary Copper, Zinc, and Lead Smelters. Volume I, Proposed Standards. EPA-450/2-74-002a. Environmental Protection Agency, Research Triangle Park, North Carolina. October 1974.

Drying

1. Function - Copper concentrates that are not to be processed by roasting must pass through a dryer, whose only function is to decrease the moisture content. Drying may be practiced to simplify handling of the concentrate. In recent years it has been practiced to make the concentrate suitable for direct feed to the reverberatory furnace; this is described in the industry as "green feed." Excessive moisture in the concentrate may cause minor eruptions or explosions that may damage the furnace (1).

Some smelters continue to use existing multiple-hearth roasters, operated at much lower temperatures, to accomplish this drying operation. Special dryers, such as rotary kilns, are also being used. The dryer may be more conveniently located at the concentrator rather than at the smelter (see Process No. 2).

2. Input Materials - The ore containing 5 to 25 percent moisture is the only input. Analysis is given in Table 2-11.

3. Operating Conditions - Except at flame fronts, temperatures in the drying operation do not exceed 150°C. Pressures are atmospheric.

4. Utilities - Fuel gas is most frequently used for ore drying, although facilities for substitution of oil are usually provided. One report calculates that for a plant yielding 91,000 metric tons of refined copper per year, the drying heat from fossil fuels would be equivalent to 17,200 kilocalories per hour of dryer operation (2).

Electricity is used for conveyors and mechanical operation of a dryer. The report cited above estimates 2700 kilowatt-hours for the same size plant (2).

5. Waste Streams - Dust generated by a drying operation would be of the same composition as the input concentrate. A foreign plant using a multiple-hearth roaster for drying reports particulate emissions of 0.05 percent of the weight of the feed. No data for domestic plants have been reported.

Small quantities of organic materials in the concentrate could be decomposed or volatilized in the drying operation, but no data have been reported. Emissions of metallic fumes or oxides of sulfur are unlikely.

6. Control Technology - Dust from a drying operation frequently consists of the fine particles present in the ore, and their collection is complicated by the ready condensation of moisture in the warm effluent. If a dryer is installed at a concentrator plant, the best control is to remove the dust by wet scrubbing and return it to the final stages of the flotation process. If a multiple-hearth roaster is used for drying, balloon flues or other particulate removal equipment may be modified to handle this wet dust. Bag filters generally produce a caked product that must be redried; they are effective, although troublesome, collectors (3,4).

Quantities of the organic materials in the concentrate are believed to be small enough that these materials require no separate treatment.

7. EPA Source Classification Code - 3-03-005-06

8. References -

1. Encyclopedia of Chemical Technology. Interscience Publishers, a division of John Wiley and Sons, Inc., New York. 1967.

2. Background Information for New Source Performance Standards: Primary Copper, Zinc, and Lead Smelters. Volume I, Proposed Standards. EPA-450/2-74-002a. U.S. Environmental Protection Agency, Research Triangle Park, North Carolina. October 1974.

3. Jones, H.R. Pollution Control in the Nonferrous Metals Industry. Noyes Data Corporation. Park Ridge, New Jersey. 1972.

4. Systems Study for Control of Emissions Primary Nonferrous Smelting Industry. Arthur G. McKee & Co. for U.S. DHEW. June 1969.

Reverberatory Smelting

1. Function - Copper smelting is the process of removing from a roasted or dried ore concentrate much of its iron and some undesirable impurities, leaving a molten mixture that can be processed efficiently by a copper converter. This is most often accomplished with a reverberatory furnace. It may, however, be accomplished by other methods (see Process No's. 7, 8, and 11).

Reverberatory smelting, the oldest of the copper smelting processes now in use, is little different now than when it was first practiced in 1879. It is in use at 11 of the 16 smelters in this country, in one or two modifications, described as either "deep bath" or "dry hearth." Some reverberatory furnaces are very large, capable of accepting as much as 1800 metric tons of material per charge (1).

The reverberatory furnace is a large, arch-roofed, horizontal chamber into which ore concentrate and flux are charged. The term "reverberatory" refers to the configuration of the flame which enters the chamber from one end, reverberates off the roof and strikes the charge from above. As the temperature of the charge increases, a complex series of reactions takes place and the charge separates into fractions. One fraction is a gas, consisting of SO_2 and volatiles, which mix into the combustion off-gases. Two other fractions are molten liquids, the copper matte and slag, which are not soluble in each other and therefore separate into layers.

The matte layer consists primarily of copper and iron sulfides and molten copper metal, which are mutually soluble. Since copper has a weak chemical affinity for oxygen, very little copper oxide is formed and almost all of the copper in the charge accumulates in the matte layer. Iron, on the other hand, combines readily with oxygen to form iron oxides, which in turn react with silica flux to form iron silicates. These compounds, plus the calcium, magnesium, and aluminum minerals that were present in the concentrate, form a lighter-density slag that floats on top of the matte. Any sulfur in the charge that is left over from the slag- and matte-forming reactions reacts with additional oxygen to form SO_2 gas.

The charge to the reverberatory furnace is proportioned so that the resulting matte typically contains 40 to 45 percent copper and 25 to 30 percent each of iron and sulfur (2). The matte contains most of the heavy elements present in the charge, practically all the gold and silver, and part of the arsenic and antimony. Some of the arsenic, selenium, and other trace elements form volatile compounds and are carried away in the gas stream.

Slag is drained periodically from a skimming bay at one end of the reverberatory furnace. Matte is also withdrawn periodically through tap holes in the lower furnace wall. Off-gas from the furnace is usually sent through waste heat boilers to recover a portion of the excess energy.

2. Input Materials - The primary input material is the roasted or dried concentrate, not much different from the concentrate received from the mill. Slags from the converter and anode furnace are added for reprocessing, as are flue dusts from dust collection equipment throughout the smelter. Precipitates from hydrometallurgical operations or materials from refinery processing may be added at this step. At some smelters, impure scrap copper is reprocessed as part of the change.

Flux normally consists of sand high in silica content, and usually limestone to make the slag more fluid. Sometimes "direct smelting ore" is used, which adds both fluxing material and additional copper.

Composition of one charge to a reverberatory furnace in Arizona is reported as follows in Table 2-17.

TABLE 2-17. COMPOSITION OF CHARGE TO A REVERBERATORY FURNACE (1)

Ore concentrate	65%
Converter slag	25%
Hydrometallurgical precipitate	2%
Flue dusts	1%
Silica flux	1%
Limestone flux	6%

This charge produced molten materials of which 47 percent was matte and 53 percent was slag.

3. Operating Conditions - When possible, the concentrate is charged into the furnace while still hot from the roaster (400°C or more). Converter slag is charged as a liquid (1100°C approximately). Other materials are usually charged at ambient temperatures. The reverberatory furnace usually heats the mixed charge to at least 1000°C before the matte forms and separates; temperatures up to 1300°C have been reported (3). All operations are at or near atmospheric pressure.

4. Utilities - It is estimated that 90 percent of the energy requirements for a smelting operation is consumed in the reverberatory furnace (4). It is reported that 18 billion kilowatt-hours of energy was used in domestic copper smelters in 1973 (4). Consumption of energy by this process is very high; it is usually supplied in the form of natural gas, but pulverized coal or fuel oil can be used. It is estimated that 500,000 kilocalories of heat is required to smelt 1 metric ton of concentrate if the charge is preheated by a roasting operation. If the charge is not preheated, an additional 390,000 kilocalories is required (5). These values give credit for steam generated by waste heat boilers, which are almost always installed with a reverberatory furnace. The reverberatory furnace is in itself thermally inefficient, using more than 4 times the heat theoretically required (6).

Noncontact cooling water is used by copper smelters primarily for the protection of equipment auxiliary to the roaster, converter, and reverberatory furnace. Data that allocate this cooling load specifically to each process are not available. Reported data indicate that the total cooling

water consumption for smelting operations can vary from 4000 to 61,000 liters per metric ton of copper product.

Contact cooling water is used at four smelters to granulate the slag from the reverberatory furnace. One smelter uses 1.7 million liters of water per day for this purpose (2).

5. Waste Streams - It is reported that 20 to 45 percent of the sulfur that enters with the ore concentrate is emitted by the reverberatory furnace as SO_2 (3,7,8). Although most smelter operators have attempted to make operational changes to reduce this quantity, no recent data are available. The gas is released as a dilute stream of variable composition, reported as being from 0.5 to 2.5 weight percent SO_2 (3,8,9,10,11,12). Other constituents in the exit gas are shown in Table 2-19, for unroasted and roasted concentrate feeds. The volume of this gas is very large since it consists primarily of the combustion gases from the heating fuels. Temperature of the exit gases may reach 1150° to 1200°C (10).

Between 14 and 40 kilograms of particulate matter is emitted in this gas stream per metric ton of copper matte produced (8,11,13,14). One analysis of the particulates showed 24 percent copper and concentrations of other elements as shown in Table 2-18.

TABLE 2-18. ANALYSIS OF PARTICULATES EMITTED FROM A REVERBERATORY FURNACE (15)

	mg/l
Zinc	44,000
Cadmium	310
Manganese	100
Chromium	45
Nickel	35
Mercury	2.5

Other investigations indicate that most of the volatilized arsenic, selenium, lead, antimony, cadmium, chromium, and zinc emissions will be generated in the reverberatory furnace (10,11,14,16,17,18).

Fugitive dust is generated in this process as materials are loaded into the furnace. No quantities are reported, but this is probably one of the largest sources of dust in a smelting operation.

The only liquid waste from this process is the run-off from slag granulation. Three complete analyses are shown in Table 2-20. Liquid waste is most often generated as the overflow from a pond into which the molten slag is dumped. Since the pond is an open body of usually hot water, subject to rainfall and evaporation, quantity and composition of the overflow may be highly variable.

One copper smelter is situated close to a market for the furnace slag it produces; for all the others, slag constitutes a large quantity of solid

TABLE 2-19. COMPOSITION OF REVERBERATORY FURNACE EXHAUST GASES (12)

Component	Green feed, % weight	Calcined feed, % weight
Carbon dioxide	8.4	10.2
Nitrogen	69.3	71.0
Oxygen	0.25 - 1.0	0.25 - 1.0
Water	18.8	17.7
Sulfur dioxide	1.5 - 2.5	0.6

TABLE 2-20. EFFLUENTS FROM SLAG GRANULATION (16)
(mg/l)

Parameter	Plant 103	Plant 110	Plant 102
pH	7.7	8.1	6.4-7.6
TDS	140.	3800.	
TSS	6.8	151.	
SO_4=	62.	310.	
CN-	0.005	0.050	0.030
As	3.7	0.048	5.70
Cd	0.001	0.001	0.042
Cu	0.12	0.05	0.604
Fe	0.04	0.03	340.
Pb	0.04	0.070	7.4
Hg	0.0001	0.0001	0.0001
Ni	0.001	0.06	0.16
Se	0.001	0.54	0.040
Te	0.001		0.100
Zn	0.44	0.023	36.
Oil and grease		0.0	0.02

waste, as much as 3000 kilograms per metric ton of copper produced (15). Table 2-21 gives an analysis of trace elements found in a reverberatory furnace slag. The bulk of the slag is a mixture of iron silicates, as shown also in Table 2-21.

6. Control Technology - Gases from the reverberatory furnace pass through a waste heat boiler and then through an electrostatic precipitator for particulate removal. The gases may pass through spray coolers or baloon flues before entering the ESP units. The degree of particulate removal ranges from 50 to 99.9 percent. Particulates collected are recycled into the metallurgical process, normally as part of the reverberatory furnace charge, but accumulation of trace elements causes some flue dusts to be discharged or processed separately. Quantities and their disposition are not reported.

At present, there is virtually no control of the SO_2 emissions from reverberatory smelters. Intensive studies are under way to develop scrubbing techniques that can be applied to large volumes of hot flue gas containing small concentrations of SO_2. These represent the best available control technology. One smelter absorbs the SO_2 from this stream in dimethylaniline and regenerates it as a concentrated stream for further processing. One Canadian smelter uses an ammonia absorption process on some smelter streams, but this system is not in use domestically. Other scrubbing solutions, containing compounds of zinc and aluminum, are used on smelter gases in Japan. Scrubbers using lime or limestone, with and without magnesium addition, are being used on sulfur-containing flue gases from coal-fired boilers in the United States, and might be adopted for use in U.S. smelters, as has been done in Japan. Another absorption process based on sodium sulfite-bisulfite is being tested. The only one of these processes specific to the domestic copper industry is DMA absorption, described in Process No. 15.

An alternate method of controlling SO_2 emission is to increase the concentration in the off-gas to a level sufficient for sulfuric acid production. Such a strategy has been successfully implemented in a number of Japanese furnaces of conventional design and operation. Methods include fuel-rich or oxygen-enriched combustion, use of preheated secondary air in order to achieve rapid smelting and sulfur release, use of high grade concentrates, instrument controlled combustion and feeding for steady level of operation, or simply tighter construction and leak control. One Japanese smelter achieves high SO_2 concentrations by blending the reverberatory off-gas with the exhaust from a continuous furnace that combines the functions of roasting, smelting, and converting. At another Japanese smelter, the reverberatory exhaust is blended with the convertor off-gas and scrubbed with a magnesium hydroxide slurry, forming magnesium sulfite, which can be decomposed by calcination to MgO and concentrated SO_2 (19).

Of the four smelters that practice slag granulation, one reports no wastewater from this source since the rate of evaporation at this location necessitates a continuous water make-up to the quenching pond. The other three smelters mix the water from slag granulation with other wastes (2,20). Control of these mixed wastes is discussed in Section 6 of this report.

TABLE 2-21. GENERAL RANGE OF REVERBERATORY FURNACE SLAG COMPOSITION

Compound or element	Composition, percent weight
FeO	34 to 40
SiO_2	35 to 40
CaO	3 to 7
MgO	0.5 to 3
Al_2O_3	4.5 to 10
Copper	0.4 to 0.7
Sulfur	1.0 to 1.5

Trace elements	Parts per million
Zinc	Approximately 7800
Magnanese	Approximately 450
Antimony	Approximately 400
Lead	Approximately 100
Chromium	Approximately 100
Selenium	Approximately 20
Nickel	Approximately 25
Cadmium	Approximately 10
Mercury	Less than 1.0
Arsenic	Trace
Tellurium	Trace
Cobalt	Trace

Granulated slag is usually a coarse-grained material of low to medium density, usually discarded near the smelter. A small amount may find a market for use as road fill or concrete aggregate. Crushed slag that has not been granulated also finds a small market for these same purposes. Most slag is not granulated, but is simply poured out and allowed to solidify. There is no easy way to reclaim the slag dumping areas, and there are no published reports on how this could be done. It is generally assumed that the potential of secondary water pollution from slag dumps is less than that from mine spoil or tailings beds.

7. EPA Source Classification Code - 3-03-005-03

8. References -

1. Encyclopedia of Chemical Technology. Interscience Publishers, a division of John Wiley and Sons, Inc., New York. 1967.

2. Hallowell, J.B., et al. Water Pollution Control in the Primary Nonferrous Metals Industry - Volume I. Copper, Zinc, and Lead Industries. EPA-R2-73-274a. U.S. Environmental Protection Agency, Washington, D.C. September 1973.

3. Background Information for New Source Performance Standards: Primary Copper, Zinc, and Lead Smelters. Volume I, Proposed Standards. EPA-450/2-74-002a. U.S. Environmental Protection Agency, Research Triangle Park, North Carolina. October 1974.

4. Rejer, M.E. and D.H. Larson. Study of Industrial Uses of Energy Relative to Environmental Effects. U.S. Environmental Protection Agency. Research Triangle Park, North Carolina. July 1974.

5. Metallurgy Processing in 1974, Mining Congress Journal. February 1975.

6. Treilhard, D.G. Copper-State of the Art, Chemical Engineering Journal. April 1975.

7. Halley, J.H., and B.E. McNay. Current Smelting Systems and Their Relation to Air Pollution. Arther G. McKee and Company, San Francisco, California 35224. September 1970.

8. Jones, H.R. Pollution Control in the Nonferrous Metals Industry. Noyes Data Corporation. Park Ridge, New Jersey. 1972.

9. Compilation and Analysis of Design and Operation Parameters for Emission Control Studies. Pacific Environmental Services, Inc. (Individual draft reports).

10. Measurement of Sulfur Dioxide, Particulate, and Trace Elements in Copper Smelter Converter and Roaster/Reverberatory Gas Streams. EPA 650/2-74-111. U.S. Environmental Protection Agency, Washington, D.C. October 1974.

11. Statnick, R.M. Measurement of Sulfur Dioxide, Particulate, and Trace Elements in Copper Smelter, Converter and Roaster/Reverberatory Gas Streams. PB-238 095. U.S. Environmental Protection Agency, Research Triangle Park, North Carolina. October 1974.

12. Systems Study for Control of Emissions Primary Nonferrous Smelting Industry. Arthur G. McKee & Co. for U.S. DHEW. June 1969.

13. Vandegrift, A.E., L.J. Shannon, P.G., Gorman, E.W. Lawless, E.E. Sallee, and M. Reichel. Particulate Pollutant System Study - Mass Emissions, Volumes 1, 2, and 3. PB-203 128, PB-203 522, and PB-203 521. U.S. Environmental Protection Agency, Durham, North Carolina. May 1971.

14. Trace Pollutant Emissions from the Processing of Metallic Ores. PEDCo Environmental Specialists, Inc. August 1974.

15. Assessment of Industrial Waste Practices in the Metal Smelting and Refining Industry - Volume II Primary and Secondary Nonferrous Smelting and Refining (Draft). Calspan Corporation, Buffalo, New York. April 1975.

16. Development Document for Interim Final Effluent Limitations Guidelines and Proposed New Source Performance Standards for the Primary Copper Smelting Subcategory and the Primary Copper Refining Subcategory of the Copper Segment of the Nonferrous Metals Manufacturing Point Source Category. EPA 440/1-75/032-b. U.S. Environmental Protection Agency, Washington, D.C. February 1975.

17. Davis, W.E. National Inventory of Sources and Emissions: Copper, Selenium, and Zinc. PB-210 679, PB-210 678, and PB-210 677. U.S. Environmental Protection Agency, Research Triangle Park, North Carolina. May 1972.

18. Phillips, A.J. The World's Most Complex Metallurgy (Copper, Lead, and Zinc). Transactions of the Metallurgical Society of AIME. Volume 224: pp. 657-668. August 1962.

19. SO_2 Control for the Primary Copper Smelter Reverberatory Furnace, Pacific Environmental Services, Inc. EPA Draft Report. April 1977.

20. Assessment of the Adequacy of Pollution Control Technology for Energy Conserving Manufacturing Process Options. Industry Assessment Report on the Primary Copper Industry. Arthur D. Little, Inc. Draft. October 1974.

Electric Smelting

1. Function - Copper smelting is the process of removing from an ore concentrate a portion of its iron and sulfur content in order to produce a molten mixture that can be treated efficiently in subsequent processing. Smelting requires only the application of heat to produce matte and slag from a charge of minerals. Three other smelting methods are used (Process No's. 6, 8, and 11). In electric furnace smelting, heat is supplied by electricity.

Electric furnaces for copper smelting are similar to those used in other metallurgical industries. Three electric furnace installations in the United States are used for copper smelting. Capacities are up to 1350 metric tons of total charge per day.

2. Input Materials - The principal input is copper ore concentrates processed or blended to a suitable composition. Various fluxing materials are also required. The charge materials are similar to those outlined for a reverberatory furnace (Process No. 6).

Electric smelting requires the use of carbon electrodes to conduct electric current into the layer of slag. Various types of carbon electrodes can be used. These electrodes are consumed during operation. In one U.S. smelter, a proprietary paste carbon mixture is consumed at a rate of 2.5 kilograms per metric ton of charge (1).

3. Operating Conditions - The charge is usually heated to temperatures between 1000° and 1300°C, and the electric furnace is operated at a small negative pressure (2). Electric furnaces are normally enclosed in a large building.

4. Utilities - When hot concentrate is fed from a roasting process, electric energy is consumed at a rate of 605 kilowatt-hours per metric ton of total feed (1). Use of cold feed requires 990 kilowatt-hours per metric ton of concentrate (3). No direct combustion of fuel takes place in electric smelting.

The furnace must be cooled to protect some of the components from high temperatures. Cooling is done partially by infiltration of air into the furnace, but some external cooling is also required. Either water or air can be used, the quantity depending on furnace design. Infiltration of air is also required to ensure complete oxidation of liberated sulfur. Operators of one electric smelter report that 111,000 liters per minute of air is circulated each second to cool a furnace of 51,000 KVA transformer capacity (4).

5. Waste Streams - SO_2 in the gas emitted from an electric furnace is more highly concentrated and temperatures are lower than in emissions from a reverberatory furnace. SO_2 concentration can range from 3 to 8 percent (3). Within limits this can be adjusted to make the gas suitable for sulfuric acid production. The electric furnace may produce small amounts of hydrogen gas and carbon monoxide, but sufficient air infiltrates to oxidize these combus-

tible materials. Very small amounts of hydrocarbons released from the electrode compounds will also burn.

Because of the lower gas volumes and more uniform gas flow, emissions of particulate matter would be expected to be lower than with a reverberatory furnace; no published estimates are available. Particulate composition would be about the same as from a reverberatory furnace (Process No. 6).

Slags and wastewaters from slag granulation would be similar to those of the reverberatory furnace, although more complete removal of copper and sulfur compounds from electric furnace slags is likely.

6. Control Technology - The three operating electric smelters in this country use the gases from the furnaces for sulfuric acid manufacture. In each case the gas stream is first combined with that from another furnace, such as a fluidized roaster or converter. Acid manufacture is the best available technology for SO_2 removal from electric furnaces, since the sulfur content is high enough for that application.

Control of the slag as a solid waste, or lack of controls, is described in reference to the reverberatory furnace (Process No. 6).

The small wastewater stream from slag granulation is invariably mixed with other streams for treatment, as described in the section on sulfide ore mining and concentrating.

7. EPA Source Classification Code - 3-03-005-03

8. References -

1. Hallowell, J.B. et al. Water Pollution Control in the Primary Nonferrous Metals Industry - Volume I. Copper, Zinc, and Lead Industries. EPA-R2-73-274a. U.S. Environmental Protection Agency, Washington, D.C. September 1973.

2. Encyclopedia of Chemical Technology. Interscience Publishers, a division of John Wiley and Sons, Inc., New York. 1967.

3. Background Information for New Source Performance Standards: Primary Copper, Zinc, and Lead Smelters. Volume I, Proposed Standards. EPA-450/2-74-002a. U.S. Environmental Protection Agency, Research Triangle Park, North Carolina. October 1974.

4. Cole, R.C. Inspiration's Copper Smelter Facilities. Mining Congress Journal. October 1974. p. 22-32.

Flash Smelting

1. Function - Copper smelting is the process of removing from an ore concentrate a portion of its iron and sulfur content in order to produce a molten mixture that can be treated efficiently by a copper converter. Until about 25 years ago, only two batch-type smelting processes were available, both inefficient in energy consumption (see Process No's. 6 and 7). Since that time, a continuous flash smelting process has been developed. This process performs the smelting function at a much higher thermal efficiency while producing a continuous, more easily controlled stream of flue gas, with a high SO_2 content (1).

In flash smelting, ore concentrates are injected along with flux and preheated air into a combustion chamber. Part of the sulfur of the concentrate burns in a "flash" combustion while the particles are falling through the chamber. The heat from this combustion maintains smelting temperature. Matte and slag form in the chamber and separate into layers as in a reverberatory furnace. The matte is sent to a conventional converter for further processing, and the slag, which contains too much copper to discard, is also further processed (see Process No. 12).

One smelter in the United States is operating an Outokumpu flash smelting unit that was developed in Finland. This version is in extensive use in several other countries. Another flash smelter design, using pure oxygen, is operating in Canada.

2. Input Materials - Copper concentrates especially tailored for flash smelting are the primary input. Not all concentrates are suitable for this process. The concentrates must be finely pulverized (50 percent minus 200 mesh) (2), and must contain very low concentrations of lead, zinc, and other volatile metals. They must have a fairly high sulfur-to-copper ratio, and thus are not high-grade concentrates. The concentrates are not preroasted, unless they contain considerable arsenic, but must be dried. Precipitates from hydrometallurgical operations cannot normally be handled by a flash smelter.

Flux in the form of silica sand or crushed rock must be prepared in a separate milling process to 80 percent through 14 mesh (2) and must also be dried. High grade "direct smelting" ores can be substituted if available.

3. Operating Conditions - Temperature in the flash chamber is maintained at approximately 1100°C (1). Pressure is approximately atmospheric.

4. Utilities - Fuel consumption in the Outokumpu flash smelter is only about two-thirds of that required by a reverberatory furnace in equivalent production (2,3). Except for start-up or abnormal operations, fuel is required only to preheat the combustion air. This is reported as 7,560,000 kilocalories per hour for copper production of 100,000 metric tons per year (2). Any fossil fuel can be used.

Natural gas or oil is used to heat the furnace to start-up temperature. Oil can also be used, if required, to maintain smelting temperatures with some concentrates.

Electrical power is used to operate feed and air injection equipment as well as the complex instrumentation this process requires. An estimate of 600 kilowatt-hours for a 91,000 metric ton per year copper plant has been reported (4).

5. Waste Streams - Flash smelting removes a large percentage of the sulfur from the concentrate. From 50 to 80 percent is converted to SO_2, which leaves as a stream of 10 to 20 percent concentration. In Finland the concentrates are blended to produce a 14 percent SO_2 concentration, which is ideal for a suitably-designed sulfuric acid plant (5).

Particulates in the gas stream are expected to equal about 6 to 7 percent of the feed, which is about the same as in the reverberatory furnace. Composition should be about the same as that of effluent from a reverberatory furnace, except that content of volatile metals should be lower since they are lower in the feedstock. Care is taken to keep zinc and lead to a minimum in the concentrates, since they tend to plate out within the flash chamber.

There are no solid or liquid wastes from flash smelting. The slag is discharged to waste from the electric furnace slag treatment process (Process No. 12).

6. Control Technology - An important objective in development of the flash smelting process was sale of the sulfur. There was a good market for sulfuric acid near the Finnish smelter (5); continuous and stable production of SO_2 made acid production most efficient. Flash smelting therefore was not developed with production of copper as the sole consideration.

It is possible, for reasons of energy economy, that flash smelters will be built in this country where there is no local market for sulfur compounds. The best currently available technology for control of SO_2 emissions would still be sulfuric acid production, even if the acid were then neutralized and discarded. Wet scrubbing would be an expensive, although satisfactory, alternative. The flash smelter in this country uses the gas for acid manufacture.

Complete removal of particulates is required for sulfuric acid manufacture, and recovered dusts would be blended back into the flash smelter feed. Cyclones, balloon flues, electrostatic precipitators, and wet scrubbers afford satisfacotry methods for removal.

7. EPA Source Classification Code - 3-03-005-03

8. References -

1. Encyclopedia of Chemical Technology. Interscience Publishers, a division of John Wiley and Sons, Inc., New York. 1967.

2. Background Information for New Source Performance Standards: Primary Copper, Zinc, and Lead Smelters. Volume I, Proposed Standards. EPA-450/2-74-002a. U.S. Environmental Protection Agency, Research Triangle Park, North Carolina. October 1974.

3. Metallurgy Processing in 1974. Mining Congress Journal, February 1975.

4. Personnal Communication with Mr. Paterson. Elken - Spigerverket a/s, New York, New York.

5. Treilhard, D.G. Copper-State of the Art. Engineering/Mining Journal. April 1973.

Peirce-Smith Converting

1. Function - A copper converter produces crude blister copper metal from the matte that is formed in the smelting process. The Peirce-Smith converter is the type most often used by copper producers in this country. See also Process No. 10 for an alternate converting method.

Matte is a molten mixture containing copper, iron, and sulfur. In the converter, a flux is added to the matte and compressed air is blown into the mixture through a series of openings called tuyeres. The remaining sulfur is oxidized to SO_2 and leaves with the flue gases. The iron forms into a slag that is returned to the smelting process. The blister copper is removed for further processing.

2. Input Materials - Matte from the smelting process is the principal input. Scrap copper being recycled is also introduced at this step, as is scrap produced within the smelter from spills or ladle "skulls," and materials from other processes with high concentrations of metallic copper. Flux used in the converter is sand or crushed rock with a high silica content. Sulfur is added if necessary to maintain the proper ratio of copper to sulfur.

Table 2-22 shows an average charge and product distribution from one copper converter.

3. Operating Conditions - To ensure that a slag of proper composition is formed and separated from the molten copper, converter temperatures are carefully controlled at 1175° to 1200°C (1,2). The converter operates at atmospheric pressure.

4. Utilities - The converting process consumes no fuel, since oxidation of the remaining sulfur furnishes enough heat to keep the mixture at the proper temperature. Any excess heat is removed by addition of cold copper scrap. The proper quantity of sulfur is obtained by carefully controlling the previous smelting operation.

Electricity is used to rotate the converter to discharge the slag and product.

Compressed air is required for the process. No data are reported on the required quantities.

A small amount of cooling water is used for noncontact cooling of some of the converter sections and auxiliaries.

5. Waste Streams - The converter emits about 120 kilograms of particulate matter per metric ton of copper produced (3,4,5,6). Tables 2-23 and 2-24 provide data on converter dust from some Arizona smelters, and Table 2-25 gives an analysis of particulates from a smelter in Nevada.

TABLE 2-22. MATERIAL BALANCE ON CONVERTERS - SMELTER IN ARIZONA (1)
percent, weight

Material	Input	Output
Reverberatory matte	78	
Silica	13	
Scrap and brass, etc.	4	
Reverts	4	
Sulfur	0.5	
Blister copper		28
Slag		67
Sulfur Dioxide		2
Flue dust		3

TABLE 2-23. COMPOSITION OF CONVERTER DUST (7)

Component	Percent, weight
Cu	10 - 19.0
Fe	10 - 20.0
Pb	0.83 - 2.5
Bi	0.61
F	nil
Sb	nil
As	0.04 - 0.6
Se	0.03 - 0.5
Si	5.0 - 15.0
Mg	0.57
Mo	0.08
Al	0.4 - 3.60
O_2	21.0
Cl	nil
Te	0.005 - 0.01
S	12.0
Ca	1.0

TABLE 2-24. PARTICLE SIZE DISTRIBUTION IN CONVERTER DUST (7)

Mesh	Percent, weight
-48 to + 65	0.5
-65 to + 100	1.5
-100 to + 150	2.5
-150 to + 200	3.5
-200 to + 270	5.0
-270 to + 325	5.0
-325 to + 32 microns	16.6
-32 microns to + 25 microns	55.6
-25 microns	9.8

TABLE 2-25. PARTICULATE EMISSIONS ANALYSIS AT STACK OUTLET FOR REVERBERATORY FURNACE AND CONVERTER[a]

Metal	Percent, weight
Arsenic	0.038
Cadmium	0.008
Copper	5.6
Selenium	0.014
Zinc	1.1
Chromium	0.006
Manganese	0.023
Nickel	0.0045
Vanadium	0.0023
Boron	0.12
Barium	0.03
Mercury	0.0007
Lead	0.065
Total	7.0115

[a] Stack test data (5/13/71).

Peirce-Smith converters are designed to be partially covered by a hood that catches the SO_2 and particulate emissions from the converter, but also draws in a considerable amount of uncontaminated air. By stoichiometric calculations, the SO_2 content in converter gases varies from 15 to 20 percent at various stages in the processing of a charge, but when diluted by the excess air the resulting mixture contains from 4 to 10 percent SO_2 (2,4,5,7,8,9). Some converters may produce gas with SO_2 content as low as 2 percent (5,7). Because the mouth of the Peirce-Smith converter is rotated from under the hood when flux is added and when slag and copper are poured out, local losses of SO_2, particulate, and fume occur during those periods.

Table 2-26 gives the composition of converter off-gas from an Arizona smelter.

Fugitive dust and fumes are generated in considerable quantities in a converting operation. Measurement of the quantities has not been possible to date.

There are no solid or liquid wastes from the converter process.

6. Control Technology - Gases from a Peirce-Smith converter are sometimes combined with the gas stream from a smelting or roasting process for particle removal and further treatment. The converter SO_2 stream is usually controlled through sulfuric acid plants.

Technology for control of a mixed gas stream including converter off-gas is discussed with the various smelting and roasting processes (Process No's. 3, 4, 6, 7, and 8).

7. EPA Source Classification Code - 3-03-005-04

8. References -

1. Encyclopedia of Chemical Technology. Interscience Publishers, a division of John Wiley and Sons, Inc., New York. 1967.

2. Background Information for New Source Performance Standards: Primary Copper, Zinc, and Lead Smelters. Volume I, Proposed Standards. EPA-450/2-74-002a. U.S. Environmental Protection Agency, Research Triangle Park, North Carolina. October 1974.

3. Vandegrift, A.E., L.J. Shannon, P.G. Gorman, E.W. Lawless, E.E. Sallee, and M. Reichel. Particulate Pollutant System Study - Mass Emissions, Volumes 1, 2 and 3. PB-203 128, PB-203 522, and PB-203 521. U.S. Environmental Protection Agency, Durham, North Carolina. May 1971.

4. High, M.D. and M.E. Lukey. Exhaust Gases from Combustion and Industrial Processes. PB-204 861. U.S. Environmental Protection Agency, Durham, North Carolina. October 1971.

5. Jones, H.R. Pollution Control in the Nonferrous Metals Industry. Noyes Data Corporation, Park Ridge, New Jersey. 1972.

6. Statnick, R.M. Measurement of Sulfur Dioxide, Particulate and Trace Elements in Copper Smelter, Converter and Roaster/Reverberatory Gas Streams. PB-238 095. U.S. Environmental Protection Agency, Research Triangle Park, North Carolina. October 1974.

7. Compilation and Analysis of Design and Operation Parameters for Emission Control Studies. Pacific Environmental Services, Inc. (Individual draft reports). November 1975.

8. Control of Sulfur Oxide Emissions in Copper, Lead, and Zinc Smelting. Bureau of Mines Information Circular 8527, 1971.

9. Halley, J.H. and B.E. McNay. Current Smelting Systems and Their Relation to Air Pollution. Arthur G. McKee and Company, San Francisco, California 35224. September 1970.

10. Systems Study for Control of Emissions Primary Nonferrous Smelting Industry. Arthur G. McKee & Co. for U.S. Department of HE&W. June 1969.

TABLE 2-26. CONVERTER OFF-GAS COMPOSITION (7,11)

Component	Percent by volume
N_2	80
O_2	11
SO_2	6.9 - 9.8
SO_3	0.05 - 0.07
Dust	0.0053 g/lit max.

Hoboken Converting

1. Function - The Hoboken converter is one type of furnace used to produce crude blister copper from the matte formed in the smelting process. Its function is identical to that of the Peirce-Smith converter (Process No. 9). The principal difference is that the flue that removes the gas from the converter is an integral part of the converter construction instead of being a hood mounted above it. This design minimizes infiltration of uncontaminated air, should minimize local losses of SO_2 from the converter mouth, and allows production of a gas with a higher and more uniform SO_2 content.

One smelter in this country uses Hoboken converters; however, optimal operation has not been achieved. They are used at several smelters in Europe and South America. The potential operating advantages of this design have not been clearly documented, and there have been no test programs to characterize the level of fugitive emissions.

2. Input Materials - These are the same as for Peirce-Smith converters, consisting largely of matte from the smelters, plus silica flux and cold copper scrap.

3. Operating Conditions - These are also the same as for a Peirce-Smith unit, 1200°C at atmospheric pressure.

4. Utilities - These are also the same as for Peirce-Smith. No supplemental fuel is required for the converting process.

5. Waste Streams - Since particulate matter is generated by the air being blown through the converter charge, particulate emissions should be comparable to those of the Peirce-Smith.

The SO_2 content of the gas stream from this converter could be at least 8 percent if three or more converters are operating, and may reach as high as 13 percent. It is calculated that with oxygen enrichment, the SO_2 concentration could be increased to 10 to 14 percent (1,2).

There are no solid or liquid wastes.

6. Control Technology - Production of SO_2 by the Hoboken converter is intermittent, but a battery of several of the converters will produce a stream sufficiently constant in rate to allow the gas to be used for sulfuric acid manufacture. This has been demonstrated by a smelter in Poland in which this is the normal operating procedure. The one domestic smelter using Hoboken equipment mixes the gas stream with the emissions from an electric smelter, and after particulate removal, uses the combined stream for sulfuric acid manufacture. At the Polish smelter separate fans remove the gases from each converter, and fugitive emissions are minimized by increasing the draft to each converter and creating negative pressure during such operations as charging and pouring. At the U.S. smelter with Hobokens, the converter exhausts are connected in parallel and such individual control is not possible.

7. EPA Source Classification Code - 3-03-005-04

8. References -

1. Cole, R.C. Inspiration's Copper Smelter Facilities. Mining Congress Journal. October 1974. pp. 22-32.

2. Background Information for New Source Performance Standards: Primary Copper, Zinc, and Lead Smelters. Volume I, Proposed Standards. EPA-450/2-74-002a. U.S. Environmental Protection Agency, Research Triangle Park, North Carolina. October 1974.

Noranda

1. Function - Noranda is one design of a continuous smelter, which in a single furnace combines most of the functions of roasting, smelting, and converting. This process approaches a one-step method of producing copper metal from ore concentrates. A Noranda installation is being started up in Utah. One other unit is operated by the developer in Canada.

The Noranda furnace is a horizontal cylinder about 21 meters long, into which a mixture of concentrate and flux is continuously fed, along with fuel and oxygen. The furnace is fired from both end walls. The mixture reacts to form copper matte and slag, which separate into layers as in the batch smelting processes. Additional oxygen-enriched air is blown through side-mounted tuyeres into the matte layer, forming blister copper, which collects in a third liquid layer below the matte. Slag and copper matte are intermittently tapped from the furnace. Noranda slag contains 10 to 12 percent copper, and is processed to recover the copper content (see Process No. 13).

Noranda does not completly eliminate the use of the copper converter. Blister copper from Noranda contains from 1.5 to 2.0 percent sulfur, and is usually batch treated in a standard converter to remove additional sulfur prior to fire refining. If the concentrate contains considerable impurity elements, the developer recommends that Noranda be used as a smelter only, to produce a high-grade matte for separate conversion to blister copper (1,2,3).

2. Input Materials - As normally used, Noranda will be fed with "clean" concentrates that contain low concentrations of volatile elements, especially arsenic. Pulverized silica and limestone fluxing materials are blended with the concentrate. Flue dusts may be mixed with the charge. Many of the finer particles may be pelletized to minimize particulates in the gas stream (1,2).

3. Operating Conditions - This process operates at approximately atmospheric pressure. Temperatures in the U.S. installation have not been reported, but will probably be higher than 1100°C, which is the flue gas temperature from the Canadian smelter (1,2).

4. Utilities - A principal advantage of Noranda is its efficient utilization of fuel. Heat losses during transfer of concentrate from the roaster to the reverberatory furnace are suppressed, as well as heat losses during the transfer of the matte from the reverberatory furnace to the converter. In addition, the net heat of oxidation is used for smelting. Fuel is only required to augment the fuel value of the sulfur and iron in the concentrate. With oxygen enrichment, about 440,000 kilocalories of heat is required to produce a metric ton of copper, which is about 22 percent of that required by a reverberatory furnace. The operating installation in Canada uses fuel oil as a heat source, but other fuels are acceptable (1,2,3).

The fuel consumption reported above was based upon enrichment of combustion air to 50 percent oxygen, and of tuyere air to 35 percent. Although oxygen enrichment is not necessary with the Noranda process, best economy requires its use, and it has been reported that the U.S. installation will

use a higher degree of enrichment than in the Canadian plant.

Small amounts of electricity are used for feed injection and auxiliary services (1,2).

5. Waste Streams - With oxygen enrichment, gas from the furnace contains about 23 percent SO_2. Air infiltration around the hood that encloses the exhaust duct reduces the concentration to about 13 percent SO_2. If oxygen enrichment is not used, furnace flue gases will contain about 4 percent SO_2. Gas emission is interrupted about 5 percent of the time during tapping operations.

Particulate emission rates have not been reported, but are probably dependent on the size distribution in the feed. Since feed is continuously injected at high velocity into a moving gas stream, particulate loadings could be substantial.

The use of Noranda will cause an emission of a gas stream low in SO_2 content from the associated converter operation. Details are unreported.

There are no solid or liquid wastes from this process. Slag is transferred to Process No. 13 for further treatment (1,2).

6. Control Technology - At the operating Canadian smelter, most of the particulates are collected in a cooling chamber connected to the furnace hood, and in an ESP unit. Most of the dust is pelletized and recycled. The gas is further cleaned and used for sulfuric acid production. This probably represents best control technology for this process. The equipment to be used at the U.S. plant has not been reported.

Control technology for Noranda converter off-gas cannot be established until data of gas composition are known (1,2).

7. EPA Source Classification Code - None

8. References -

1. Environmental Considerations of Selected Energy Conserving Manufacturing Process Options, Volume XIV, EPA 600/7-76-034n. U.S. Environmental Protection Agency, Cincinnati, Ohio. December 1976.

2. Advertising literature and letter, Noranda Mines Limited, Toranto.

3. Mills, L.S., G.D. Hallett, and C.J. Hewman. Design and Operation of the Noranda Process Continuous Smelter. Extractive Metallurgy of Copper. AIME. 1976.

Electric Furnace Slag Treatment

1. Function - Slag from a flash or continuous smelter contains too much copper to discard economically. Also, in flash or continuous smelting there is no way to recycle the slag formed in the converters and the anode furnaces. Among the various ways to reclaim the copper content of these slags is the use of an electric furnace. This is the procedure being used with the flash smelter now operating in the United States. Slag can also be treated by flotation, as described in Process No. 13.

In electric furnace slag treatment, coke is used to reduce sulfates and metallic copper and to reconstitute the copper as a sulfide. A molten matte is formed that can be recycled to a converter for production of copper metal; the process leaves a slag low in copper content that can be discarded.

2. Input Materials - The slags are similar to those from the reverberatory furnace (Process No. 6), the copper converters (Process No's. 9 and 10), and the fire refining furnaces (Process No. 18), except with higher copper content. Flash smelting slags contain 1 to 2 percent copper, and slags from Noranda, 10 to 12 percent copper.

Carbon electrodes, as described for electric smelting (Process No. 7) are consumed. Reported usage is 1.5 kilograms per metric ton of slag processed (1). Iron pyrites are usually added to the furnace charge to adjust sulfur content. The coke is similar to that used in electric furnace operations in other industries. High grade coal can be substituted. No data on quantities consumed are available.

3. Operating Conditions - Temperatures are maintained somewhere in the range of 1200° to 1300°C (2). Pressures are approximately atmospheric.

4. Utilities - Electric consumption is reported as 221 kilowatt-hours per metric ton of slag treated (1). There is no reported use of cooling water or air in the slag treatment furnace.

5. Waste Streams - Since this is a reducing furnace, it is expected that SO_2 in the exit gases is negligible. Carbon monoxide and particulates are present, however, including metallic fumes of zinc and other elements, and there will be some hydrogen if moisture is introduced into the furnace along with the coke. There are no reported analyses of these gases. Gas volumes are relatively small.

No liquids are discharged from this process.

Slag discharged from this treatment is primarily iron silicate, similar to the slag from the reverberatory furnace (Process No. 6). No analyses are available.

6. Control Technology - In other industries, gases from reducing electric furnaces are passed through a wet scrubber for cooling and particulate removal, and are then either burned for fuel, incinerated with no recovery of the heat, or discharged through a stack. Venturi scrubbers are normally used to cool the gas quickly and minimize the possibility of explosions. This is a preferred design. Combustion of hot gases prior to particulate removal is sometimes practiced; the gases are then cooled with water sprays and passed through an ESP for particulate removal.

Particulates will probably be sluiced into a tailings pond and discarded, since they should be low in volume. They may contain quantities of trace elements, however, and their proper disposal warrants further study.

Slags from the slag treatment furnace are discarded, with or without granulation, as outlined for the reverberatory furnace (Process No. 6).

7. EPA Source Classification Code - None

8. References -

1. Personal Communication with Mr. Paterson Elken - Spigerverket a/s. New York, New York.

2. Background Information for New Source Performance Standards: Primary Copper, Zinc, and Lead Smelters. Volume I, Proposed Standards. EPA-450/2-74-002a. U.S. Environmental Protection Agency, Research Triangle Park, North Carolina. October 1974.

Flotation Slag Treatment

1. Function - Slags from a flash or continuous smelter contain a significant amount of copper, which can be reclaimed either by electric furnace treatment, as described in Process No. 12, or by slow cooling, crushing, and flotation. The flotation method will be used to treat slags from the Noranda installation now beginning operation in this country (1).

As a molten slag cools, each constituent in the slag will solidify sequentially in an order determined by the freezing temperatures of the individual minerals. If the slag is cooled very slowly, crystals of relatively pure materials will form that are large enough to be separated by conventional concentrating procedures. Copper in the slag will form either as small particles of metallic copper or as crystals of copper-iron sulfide, both held in a matrix primarily of iron silicate.

Details of the existing U.S. process have not been released. It is believed, however, that molten slag from the Noranda furnace is to be transported while still molten to a series of deep covered pits, where over a period of days, or perhaps weeks; the slag will cool by natural conduction through the surrounding earth. When fully cooled, the slag will be reclaimed by conventional mining techniques, crushed, and concentrated. The resulting concentrate will be processed in smelting furnaces in the same manner as an ore concentrate (2).

2. Input Materials - Slag from the Noranda furnace, containing 10 to 12 percent copper, is the only known input.

To reclaim the cooled slag, explosives and concentrating reagents will be used, as described in Process No's. 1 and 2.

3. Operating Conditions - Slag is withdrawn from the smelting furnace at approximately 1200°C. The slag will cool to approximately ambient temperature after an extended period of time.

4. Utilities - It is believed that the molten slag will be transported to the slag cooling area in specially-designed vehicles, requiring diesel fuel. Whether or not slag must be heated before being added to the cooling pits has not been announced.

Reclamation of the slag will require the same utilities used for mining and concentrating, consisting of electrical energy for crushing and large quantities of water for concentrating.

5. Waste Streams - A large proportion of the slag will eventually become a waste in the form of tailings whose chemical composition is similar to slag from a reverberatory furnace (Process No. 6). Additional wastes will be created such as airborne particulates from mining and crushing and waterborne contaminants from concentrating, as described in Process No's. 1 and 2.

6. Control Technology - The flotation treatment of high copper content furnace slags does not appear to introduce additional requirements for environmental control beyond those needed for control of mining and concentrating wastes. In the existing U.S. application of this process, it is not known whether special facilities will be built to reclaim the cooled slag, or whether existing mining and concentrating facilities will be adapted to this purpose.

7. EPA Source Classification Code - None

8. References -

1. Process Announcement. Kennecott Copper Corporation.

2. Environmental Considerations of Selected Energy Conserving Manufacturing Process Options: Vol. XIV, Primary Copper Industry Report. EPA-600/7-76-034n. U.S. Environmental Protection Agency, Cincinnati, Ohio. December 1976.

Contact Sulfuric Acid Plant

1. Function - An acid plant catalytically oxidizes SO_2 gas to sulfur trioxide, and absorbs it in water to form sulfuric acid. SO_2 gas may also be controlled by DMA absorption (Process No. 15) or elemental sulfur production (Process No. 16).

Contact sulfuric acid plants are continuous steady-state processing units that are operated in other industries using SO_2 made by burning elemental sulfur. They may be used with waste SO_2 streams if the gas is sufficiently concentrated, is supplied at a reasonably uniform rate, and is free from impurities.

The heart of a sulfuric acid plant is a fixed bed of vanadium pentoxide or other special catalyst which oxidizes the SO_2. All other components of the plant are auxiliary to this catalytic converter. The other components clean and dry the stream of gas, mix the proper amount of oxygen with it (unless sufficient oxygen is present), preheat the gas to reaction temperature, and remove the heat produced by the oxidation.

The plant incorporates one or two absorbers to contact the gas with water to form the acid. If only one absorber is provided, this is described as a single-contact sulfuric acid plant. If two are provided, the second is placed between stages of the converter, and this is a double-contact plant. The second absorber allows a larger proportion of the SO_2 to be converted into acid, and thus removes more SO_2 from the gas stream if the initial concentration is high.

Thirteen of the copper smelters in this country operate contact sulfuric acid plants to treat all or part of the gases from the metallurgical operations.

2. Input Materials - Most contact sulfuric acid plants operate most efficiently with a constant gas stream that contains 12 to 15 percent SO_2. Performance almost as good can be achieved in plants that are designed for 7 to 10 percent SO_2 content. The ability of a plant to convert most of the SO_2 to sulfuric acid declines either as gas streams become weaker in SO_2 or as the flow rate or concentration becomes less consistent. A concentration lower than 4 percent SO_2 is extremely inefficient, since sufficient catalyst temperature cannot be maintained (1). Certain modifications of the process, which add heat by combustion of fuel, can provide better conversion at low SO_2 concentrations.

The gas that enters the catalyst bed must be cleaned of all particulate matter, be almost completely dried, and contain no gases or fumes that act as poisons to the catalyst. The acid plant is always supplied with special scrubbers to remove final traces of objectionable materials. Table 2-27 provides information on the acceptable limits of these impurities.

TABLE 2-27. ESTIMATED MAXIMUM IMPURITY LIMITS FOR METALLURGICAL OFF-GASES USED TO MANUFACTURE SULFURIC ACID (1)

Substance	Approximate limit, (mg/Nm^3)[a] Acid Plant Inlet	Gas Purification System Inlet[b]
Chlorides, as Cl	1.2	125[d]
Fluorides, as F	0.25	25[e]
Arsenic, as AS_2O_3	1.2[c]	200
Lead, as Pb	1.2	200
Mercury, as Hg	0.25	2.5[f]
Selenium, as Se	50[c]	100
Total Solids	1.2	1000[g]
H_2SO_4 Mist, as 100% acid	50	-
Water, as H_2O	-	400×10^3

Notes:

(a) Basis: dry off-gas stream containing 7% sulfur dioxide.

(b) For a typical gas purification system with prior coarse dust removal.

(c) Can be objectionable in product acid.

(d) Must be reduced to 6 if stainless steel is used.

(e) Can be increased to 500 if silica products in scrubbing towers are replaced by carbon; must be reduced if stainless steel is used.

(f) Can be increased to 5-12 if lead ducts and precipitator bottoms are not used.

(g) Can usually be increased to 5000-10,000 if weak acid settling tanks are used.

Clean water is required to react with the SO_3 to form sulfuric acid. It may be necessary to deionize the water in a special ion exchange system in order to avoid excessive corrosion or to meet acid quality specifications. Steam condensate may also be used.

3. Operating Conditions - The catalyst bed operates properly only if temperatures are maintained between 450° and 475°C. Pressures do not usually exceed 2 kilograms per square centimeter. The plants are usually not enclosed in a building.

4. Utilities - Noncontact cooling water is required. At one plant producing 1500 metric tons of acid per day, about 12 million liters of water is required each day (2).

A small amount of electricity is required for pumps and blowers. This may be generated on-site in some cases, where recovery of waste heat is maximized.

In certain patented modifications, heat from combustion of natural gas is used to provide better efficiency at low SO_2 concentrations. Natural gas or oil is also required to heat any acid plant to operating temperature following a shutdown.

5. Waste Streams - Single-contact sulfuric acid plants using weak gas streams can at best absorb only 96 to 98 percent of the SO_2 fed to them. The remaining quantity passes through to the atmosphere. Efficiencies as low as 60 percent have been reported (3). In addition, it is likely that some SO_2 may be vented without treatment in some smelters since an acid plant cannot instantly change the flow to match the intermittent production typical in the copper industry. Of gas that is treated, it is reported that most absorber exit gases contain from 0.01 to 0.5 percent SO_2 (4). Total flow rates may range from 34,000 to 68,000 normal cubic meters per hour (5).

Double-contact acid plants provide a higher percentage of SO_2 removal if they are fed gas with a higher SO_2 content. Efficiencies higher than 99 percent have been reported. Exit gas SO_2 concentration is still usually within the same range as shown above, although one recently developed process claims stack emissions of less than 0.005 percent SO_2 (6).

At a Japanese smelter the exit gas from the acid plant is routed to a gypsum plant and the SO_2 concentration is less than 0.002 percent at the stack exit (7).

In sulfuric acid plants, it is difficult to prevent some loss of SO_3, in the form of a fine mist of sulfuric acid, with the absorber exit gases. This is usually 0.02 to 0.04 kilogram of SO_3 per metric ton of 100 percent acid produced.

The scrubbing columns that clean the waste gas stream create off-grade weak acid that cannot be sold. The amount is estimated as 4 to 8 liters for each 10 cubic meters of gas treated (8). Table 2-28 provides typical analyses for acid plant blowdown.

TABLE 2-28. RAW WASTE CHARACTERIZATION: ACID PLANT BLOWDOWN (2)

Parameter	Units	Plant 1	Plant 2	Plant 3	Average
pH	pH	2.0-2.5	1.8	2.0	2.0
TDS	kg/metric ton		78.5	410.	244.
TSS	kg/metric ton		0.102	3.74	1.92
SO4=	kg/metric ton	[0.99][a]	7.69	64.0	36.0
Cn⁻	kg/metric ton	0.0000	0.0000	0.0024	0.0008
As	kg/metric ton	0.044	0.129	0.004	0.059
Cd	kg/metric ton	0.0002	0.0014	0.0276	0.0097
Cu	kg/metric ton	0.0001	0.0018	[188.2]	0.0010
Fe	kg/metric ton	0.0014	0.0015	0.1116	0.0382
Pb	kg/metric ton	0.0051	0.0142	0.2501	0.0898
Hg	kg/metric ton	0.0000	0.0000	0.0002	0.0001
Ni	kg/metric ton	0.0000	0.0000	0.0030	0.0010
Se	kg/metric ton	0.0001	0.0000	0.0268	0.0090
Te	kg/metric ton	0.0000	0.0000	--	0.0000
Zn	kg/metric ton	0.0017	0.215	0.436	0.218
Oil and Grease	kg/metric ton	0.0000	--	0.0	0.0
Flow, 10^6	l/day	0.147	4.16	10.1	--
Production	metric ton/day	311.(62)	528.(264)	655.(393)	--
Flow/Prod	kg/metric ton	2,400.	15,800.	25,700.	14,700.

[a] Bracketed values not used in averaging computation.

In this industry, most particulate matter from gas cleaning equipment is recycled in dry form or as a water slurry back to the metallurgical processes. The small quantities of particulate removed by the acid scrubbing operations, however, are mixed with a stream of weak sulfuric acid and cannot readily be recycled. They are discharged with the acid plant blowdown.

In some sections of the country it is difficult to sell the product acid, even for less than the cost of manufacture. Therefore, it may be less expensive to neutralize and discard the acid than to absorb the costs of shipment to a distant user. Thus, the product acid can itself become a waste stream.

An acid plant does not produce solid wastes directly, but the gypsum formed in neutralization of acid can constitute a significant solid waste.

6. Control Technology - In this country the SO_2 in the tail gas from the sulfuric acid plant is not controlled. When SO_2 emissions are large, the best control may be to increase operating efficiency by adding additional catalyst stages or by adding heating equipment to maintain proper catalyst temperature. Changes in the metallurgical operations to produce a stream of higher SO_2 concentration at a more uniform rate are also good controls, if this is possible. Scrubbing of the weak SO_2 stream for final SO_2 absorption may also be necessary.

Mist eliminators in the form of packed columns or impingement metal screens can minimize acid mist emissions. Manufacturers claim elimination of all but 35 to 70 milligrams of mist per cubic meter of gas, and the units at times perform better. To prevent formation of plumes of mist during periods of abnormal operations, however, electrostatic precipitators are often used. Better regulation of feed rate and quality also minimizes acid loss.

As frequently happens in this industry, acid plant blowdown is sometimes mixed with other waters for treatment or recycle. Table 2-29 lists the practices of the existing smelter acid plants. The practices outlined for plants 1 and 3 appear to describe the best available control technology, since by recycle to hot ESP units the heavy metals content of this waste partially returns to the metallurgical processing.

If volumes of strong acid must be neutralized, treatment with limestone followed by more precise pH adjustment with lime, and discharge to a pond for in-perpetuity storage of the resulting gypsum is the only tested and economical method of disposal.

7. EPA Source Classification Code - None

8. References -

1. Jones, H.R. Pollution Control in the Nonferrous Metals Industry. Noyes Data Corporation. Park Ridge, New Jersey. 1972.

TABLE 2-29. ACID PLANT BLOWDOWN CONTROL AND TREATMENT PRACTICES (4)

Plant Code	Discharge	Control and/or treatment practice
1	0	Blowdown neturalized with ammonia and used to precondition converter gases prior to hot ESP. No discharge.
2	0	2/3 of blowdown to reverb brick flue spray chamber for cooling reverb gases, other 1/3 used to precondition converter gases prior to hot ESP. Any excess is solar evaporated on slag dump. No discharge.
3	0[a]	Blowdown from packed tower used in open tower blowdown to clarifier. One-half recycled to packed tower, other half to two-stage ammonia neutralization facility. Then 2.2 l/sec to converter hot ESP for gas preconditioning and 0.6 l/sec to hot ESP for gas preconditioning (joins 0.6 l/sec DMA purge). No discharge.
4	0	Blowdown to tailings pond. Pond water recirculated to mill concentrator. No discharge.
5	0	Blowdown from new scrubbers and mist precipitators to recycle and tailings thickener underflow. No discharge.
6	0	Blowdown used in mill concentrator circuit. No discharge.
7	0	Blowdown to settling pond and either recycled or wasted. No discharge.
8	0	Blowdown to acid ponds and reused in copper precipitation leach facility. No discharge.
9	0[a]	Blowdown currently used to blend fluid-bed roaster feed. Anticipate closed circuit, but will eventually send to proposed treatment facility.
10	3.4 l/sec	Blowdown to lime pond, then to tailings pond. Eventual (8 km of ponds) discharge.
11	50-190 l/sec[a]	Blowdown to go to new treatment facility with subsequent discharge.

[a] Anticipated, practice under construction.

2. Hallowell, J.B. et al. Water Pollution Control in the Primary Nonferrous Metals Industry - Volume I. Copper, Zinc, and Lead Industries. EPA-R2-73-274a. U.S. Environmental Protection Agency. Washington, D.C. September 1973.

3. Confidential information from EPA.

4. Control of Sulfur Oxide Emissions in Copper, Lead, and Zinc Smelting. Bureau of Mines Information Circular 8527, 1971.

5. Systems Study for Control of Emissions Primary Nonferrous Smelting Industry. Arthur G. McKee & Co. for U.S. DHEW, June 1969.

6. Browder, T.J. Advancements and Improvements in the Sulfuric Acid Industry. Tim J. Browder Co. San Marino, California.

7. Evaluation of the Status of Pollution Control and Process Technology - Japanese Primary Nonferrous Metals Industry. EPA Contract No. 68-02-1375, Task 36. PEDCo Environmental, Inc. Cincinnati, Ohio. July 1977.

8. Vandegrift, A.E., L.J. Shannon, P.G. Gormena, E.W. Lawless, E.E. Sallee, and M. Reichel. Particulate Pollutant System Study - Mass Emissions, Volumes 1, 2, and 3. PB-203 128, PB-203 522, and PB-203 521. U.S. Environmental Protection Agency. Durham, North Carolina. May 1971.

DMA SO_2 Absorption

1. Function - The DMA absorption process scrubs SO_2 from a stream of gas, then releases the SO_2 as a concentrated stream. The principal applications have been to concentrate streams too weak for efficient use in sulfuric acid manufacture, to absorb surges in waste gas flow that could not otherwise be handled by the acid plants, and to manufacture liquified SO_2 for sale. Sulfuric acid (Process No. 14) or elemental sulfur production (Process No. 16) may also be used to control SO_2 emissions.

Waste gases, after first being cleaned of particulate matter and dried, pass through a scrubber where most of the SO_2 is absorbed by dimethylaniline (DMA). The gases are then scrubbed with sodium carbonate to remove the remaining SO_2, then with weak sulfuric acid to reclaim the DMA in the gas stream. The gases are then released to a stack. In a series of chemical operations, the DMA is recovered for recycling, and the SO_2 is recovered as dry, 100 percent SO_2 which is compressed, cooled, and stored as a liquid.

The DMA system has the advantage of being relatively insensitive to changes in SO_2 concentration of the gas stream, and to changes in gas flow rate. If part of a waste gas stream is sent directly to an acid plant at a constant rate, the DMA can handle the remaining gas, which may be of variable composition with uneven flow. The concentrated SO_2 from the DMA plant can be bled back into the acid plant stream as required to maintain a constant and higher SO_2 concentration. Thus the acid plant operates more efficiently and more of the SO_2 in the waste gas stream is recovered.

Three smelters in this country operate DMA absorption processes, handling waste streams that contain from 1 1/2 to 10 percent SO_2 (1). Efficiencies of up to 99 percent removal from a 5 percent gas stream have been reported (2). Plant capacities are as high as 180 metric tons of liquid SO_2 per day.

2. Input Materials - Waste gas containing SO_2 is the principal input. Designers of the process do not recommend its use on streams weaker than 2 to 3 percent SO_2. The gases must be cleaned and dried as described for the contact sulfuric acid plant (Process No. 14).

A constant feed of soda ash (sodium carbonate) is required for this process. One smelter reports use of 16 kilograms per metric ton of SO_2 produced.

Sulfuric acid, 98 percent concentration, is used for drying and scrubbing. The same smelter reports consumption of 18 kilograms per metric ton of SO_2 produced, as well as a small loss of the expensive dimethylaniline, 0.5 kilogram per ton of SO_2.

3. Operating Conditions - Feed gas must be cooled to ambient temperatures prior to DMA absorption. Temperature in some of the regeneration steps may reach 150°C. Pressures in the waste gas stream are near atmospheric, and may

approach 3 kilograms per square centimeter in parts of the regeneration system.

4. Utilities - Electricity is normally used to drive pumps and blowers. The process is efficient in energy conversion; treatment of a 5 percent SO_2 gas stream requires about 160 kilowatt-hours per metric ton os SO_2 produced (2).

Steam is required at a rate of 1.0 to 1.5 tons per ton of SO_2 produced (2). Noncontact cooling water is required in the amount of 1250 liters per metric ton of SO_2 (3). A small amount of process water is needed to compensate for purge and evaporation.

5. Waste Streams - Exit gas contains 0.05 to 0.3 percent SO_2 and no particulate matter. Temperatures are approximately ambient. The DMA process adds only an insignificant quantity of carbon dioxide to the stream, and very small amounts of DMA or its decomposition products may escape the third stage of scrubbing.

The waste gas stream may carry with it an entrained mist of dilute sulfuric acid from the third stage.

This process requires scrubbing of the gas stream in a weak sulfuric acid column and thus may produce a liquid waste blowdown stream similar to that from a sulfuric acid plant. Normally, however, the same scrubber is used to treat gases that feed both the acid plant and DMA.

A liquid waste, continuously purged from the DMA process, consists of water, sodium sulfite or bisulfite, and sodium sulfate. The quantity is about 18 kilograms per metric ton of SO_2 produced, when treating gas with 5 percent SO_2 content. The stream typically contains about 4.5 percent dissolved solids, 25 milligrams DMA per liter, and 18 milligrams suspended solids per liter, with a pH around 5.8 (1).

The process produces no solid wastes.

6. Control Technology - Following DMA absorption, further treatment of the waste gas stream for SO_2 removal is not normally required. An electrostatic precipitator is usually installed to eliminate acid mist carryover.

If a separate dryer is used for DMA gas treatment, disposition of the blowdown would be the same as that for the sulfuric acid plant blowdown. Best available control technology is to neutralize this stream and recycle it as coolant to a hot ESP unit, thus returning the metals content to metallurgical processing.

The purge stream from the DMA process is the only waste of this character generated by the primary copper industry. It is a clear stream with a BOD and a COD and is quite concentrated with nonrecoverable minerals. Each of the three operating DMA installations handles the purge stream differently. One adds it to the concentrator circuits; one mixes it with the acid plant blowdown, which is in turn sent to a hot ESP unit; the third uses activated carbon to absorb the DMA content, then uses it as part of a fluid-bed wet

feed blending, which returns it directly to the metallurgical processing. This last alternative may be the best control technology, with or without activated carbon absorption. The sodium may then combine into the slag where it will not increase alkali content of the concentrator water, thus reducing potential of recycle. An excess of sodium salts may plate out in a hot ESP unit. Further study to establish the best disposition of this stream is indicated.

7. EPA Source Classification Code - None

8. References -

1. Background Information for New Source Performance Standards: Primary Copper, Zinc, and Lead Smelters. Volume I, Proposed Standards. EPA-450/2-74-002a. U.S. Environmental Protection Agency. Research Triangle Park, North Carolina. October 1974.

2. Fleming, Edward P. and Fitt, T. Cleon. Liquid Sulfur Dioxide from Waste Smelter Gases. I&EC. Vol. 42, No. 11. pp. 2253-2258. November 1950.

3. Halley, J.H. and McNay, B.E. Current Smelting Systems and Their Relation to Air Pollution. Arthur G. McKee and Company. San Francisco. September 1970.

Elemental Sulfur Production

1. Function - Sulfur dioxide from a waste stream can be converted into elemental sulfur by one of several methods. Other SO_2 removal methods are sulfuric acid production (Process No. 14) and DMA absorption (Process No. 15). Sulfur is easier to store than sulfuric acid and is less expensive to transport. Although the market is also better than for acid, the sulfur now produced by this process is not economically competitive with mined sulfur from the Texas coast.

All variations of the process use high temperatures to oxidize methane to carbon dioxide and water, while simultaneously reducing the SO_2 to sulfur. All use special catalysts and are sophisticated multi-step processes, efficient in energy utilization. Like the ammonia plants or oil refinery units they resemble, sulfur plants are most efficient as large-capacity installations.

None of the smelters in this country now include sulfur production facilities, although one plant is being constructed.

2. Input Materials - Gas must enter the process at constant flow rate and composition. The gases must contain 5 to 7 percent SO_2 (1) and must be free from particulate matter and metal-containing fumes.

Methane in the form of natural gas is added in the stoichiometric ratio of 1 kilogram to each 8 kilograms of SO_2. Additional natural gas is required as fuel.

3. Operating Conditions - Although temperatures and pressures differ in the various process modifications, most operate between 1000° and 1500°C at pressures less than 25 kilograms per square centimeter. One variation requires 1250°C for proper equilibrium (2). The equipment is not normally enclosed in a building.

4. Utilities - Natural gas fuel is assumed for most designs, and electricity is required for pumps, blowers, and compressors. One variation incorporates electrostatic precipitators as integral components, which require electric power. No quantitative utility estimates have been reported.

Cooling water is required for portions of the process.

5. Waste Streams - All these processes claim removal of more than 90 percent of the SO_2 from the gas stream, and one claims up to 95 percent. The waste gas stream can therefore be expected to contain no more than 0.7 percent SO_2. Slight emissions of H_2S gas may occur in some of the process variations.

No liquid wastes are expected from this process. The water formed by the reaction normally escapes by evaporation into the waste gas stream.

This process produces no solid wastes.

6. Control Technology - The only further control of the waste gases from this process is wet scrubbing, as described in connection with the reverberatory furnace (Process No. 6).

7. EPA Source Classification Code - None

8. References -

1. Jones, H.R. Pollution Control in the Nonferrous Metals Industry. Noyes Data Corporation, Park Ridge, New Jersey. 1972.

2. Fleming, E.P. and T.C. Fitt. High Purity Sulfur from Smelter Gases. Industrial and Engineering Chemistry. Volume 42, No. 11. March 1950. pp. 2249-2253.

Arsenic Recovery

1. Function - Much of the arsenic present in a copper ore concentrate will be volatilized in the roasting and smelting processes, and will appear in the dusts collected from the electrostatic precipitators and other particulate removal equipment. One smelter treats those dusts to extract arsenic for sale. Since demand for arsenic as a commercial item is very small, this one smelter satisfies much of the U.S. demand for this material. The balance is met by imports.

The recovery process consists of placing the collected dusts in a Godfrey roaster, a small special heated enclosure, in which they are heated until the arsenic vaporizes. The vapors are condensed in chambers, and are then resublimed and condensed to yield an arsenic trioxide product more than 99 percent pure. Arsenic metal is also occasionally produced by reducing the oxide with carbon in an atmosphere deficient in oxygen (1).

All these operations are batch-type and are done on a small scale.

2. Input Materials - Flue dusts from multiple-hearth roasters and reverberatory furnaces are the principal input. Dusts of high arsenic content from other smelters were also used at one time, but are no longer accepted by this smelter. Flue dusts are charged into the furnace along with a small amount of pyrite to minimize conversion to arsenites (1).

Charcoal in small quantity may be used for arsenic metal production.

3. Operating Conditions - Arsenic trioxide is assumed to be completely vaporized from the dusts when the temperature reaches 650° to 700°C. It recondenses in the cooling chambers at around 200°C (1). Atmospheric pressures are used.

4. Utilities - Gas-fired burners are used to heat the charge, and non-contact cooling water to assist in condensing. No quantities have been reported.

Water is used to wash down dust and spills within the plant.

5. Waste Streams - Because there is no mechanical movement of material within the Godfrey roaster, few particulates are generated during the operation. Fugitive dusts are generated during the handling of the dry materials.

The gas stream from the roaster contains carbon dioxide and water vapor, and may contain small amounts of SO_2 and arsenic fumes. No analysis has been reported.

A water waste is generated by daily washdown of the plant to remove settled dusts from materials handling. Table 2-30 gives the analysis of this water.

TABLE 2-30. ANALYSIS OF ARSENIC PLANT WASHDOWN WATER (2)

Parameter	Concentration mg/l
As	310.
Cu	88.4
Zn	37.0
Pb	7.7
Cd	1.05
Hg	0.0003
Se	0.04
Te	0.43
Ni	0.75
Fe	9.4
$SO_4^=$	340.
Cn^-	0.01
Oil and grease	0.04
pH	3.8 to 4.4

No solid wastes are generated by this process.

6. Control Technology - Fugitive dust emissions in and from the plant building are controlled by the use of fabric filter baghouses on ventilating air streams.

Effluent process gas streams are currently routed through an electrostatic precipitator before being vented to a tall stack. After treatment for arsenic removal, the remaining dusts are returned to the smelting furnace. In the near future, a fabric filter will be installed to remove particulate from the waste gas.

The washdown from this plant mixes with another waste stream and discharges to a pond. Table 2-30 indicates that up to a kilogram of arsenic may enter the pond each day from this source. The degree to which it becomes soluble has not been reported.

7. EPA Source Classification Code - None

8. References -

1. Encyclopedia of Chemical Technology. Interscience Publishers, a division of John Wiley and Sons, Inc. New York. 1967.

2. Development Document for Proposed Effluent Limitations Guidelines and New Source Performance Standards for the Primary Copper, Lead, and Zinc Segment of the Nonferrous Metals Manufacturing Point Source Category (Draft). Contract No. 68-01-1518. U.S. Environmental Protection Agency. Washington, D.C. December 1973.

Fire Refining and Anode Casting

1. Function - Impure or "blister" copper from the converters must be refined to remove impurities. This is partially accomplished by fire refining, which is the last major process that occurs at a copper smelter.

Blister copper is placed in a fire refining furnace, a flux is usually added, and air is blown through the molten mixture. This blow oxidizes most of the remaining sulfur, vaporizes some impurities and converts others into a slag. The mixture is then "poled" with wooden logs or otherwise treated to reduce the excess oxygen in the mixture. The copper is then poured into molds and cooled with water sprays or by immersion in a tank of water. The resulting anodes are sent to an electrolytic refinery for further processing.

A small percentage of the copper may be subjected to more complete fire refining to produce ingots or special castings for direct sale. This fire refined copper is used for manufacture of alloys and other special purposes, and contains no impurities other than oxygen in significant amounts. Anode copper is less completely refined, but is more than 99 percent pure. The general range of analysis is shown in Table 2-31.

2. Input Materials - Copper from the converting operation (Process No's. 9 and 10) is the principal input, usually charged into the fire refining furnace while still molten.

Various slag-forming fluxes may be added. These include silica sand and sodium carbonate.

Wooden poles are still occasionally used for the reducing step of the process. The wood decomposes when thrust into the molten copper, producing a variety of carbonaceous products that remove oxygen from the mixture. Instead of wood, some smelters use hydrogen, natural gas, or ammonia for reduction.

The casting molds are sprayed with a mold dressing of silica flour or potassium alum to keep the castings from sticking (1).

3. Operating Conditions - Temperature in the furnace is around 1100°C. Pressure is atmospheric.

4. Utilities - If molten blister copper is charged to the furnace, additional fuel is required only in small amounts. Gas or oil is used for heating, or to melt the charge if cold feed is used. In a plant producing 91,000 metric tons of copper per year, fuel consumption for this process has been estimated at 8600 kilocalories per hour of operation (1).

Compressed air is used to oxidize the molten mixture in the furnace. No quantities have been reported.

TABLE 2-31. GENERAL RANGE ANALYSIS OF ANODE COPPER[a] (1)

Constituent	Content, % weight
Copper	99.0-99.6
Oxygen	0.1-0.3
Sulfur	0.003-0.01
Arsenic	0.003-0.2
Antimony	0.001-0.1
Bismuth	0.001-0.01
Lead	0.01-0.2
Nickel	0.01-0.2
Selenium	0.01-0.06
Tellurium	0.001-0.02
Gold	3.4-102.6[b]
Silver	68-3080[b]
Platinum	N.A.
Palladium	N.A.

[a] Extremes omitted

[b] g/metric ton

N.A. - not available

Water is used for direct cooling of the casting machine and the copper anodes. This is usually a recirculated stream or is reclaimed water from combined sources. Quantities are shown in Table 2-32 for five smelters.

5. Waste Streams - Gases from the fire refining furnace may contain fumes of zinc and cadmium (2) that probably condense within the exhaust duct. Concentration of SO_2 has been estimated at 0.38 kilogram per metric ton of copper treated (3). There are no recorded data giving the quantity of this waste gas, but particulate loading has been reported as 5-20 kilograms per metric ton of copper produced (4). Gas temperature is about 1000°C (5).

The water used for anode cooling is reported to pick up additional amounts of arsenic, copper, and zinc, and also to pick up aluminum and chlorides, probably from mold dressing compounds. Table 2-33 lists the data reported for one anode cooling operation. The "net change" represents the difference between inlet and outlet concentrations.

There are no solid wastes from this process. All slags are returned to the metallurgical processing.

6. Control Technology - No control of waste gas from the fire refining process is being exercised by any of the operating copper smelters. Apparently it is assumed that this is one of the cleaner gas streams from pyrometallurgical operations because of the relative purity of the input copper.

Table 2-34 lists the controls of contact cooling water being practiced by the domestic smelters. This list includes water used for cooling of both anodes and blister copper direct from the converter. Discussion of the control of mixed waste streams appears in the section on water management of the sulfide mining and concentrating industries.

7. EPA Source Classification Code - 303-005-05

8. References -

1. Encyclopedia of Chemical Technology. Interscience Publishers, a division of John Wiley and Sons, Inc. New York. 1967.

2. Background Information for New Source Performance Standards: Primary Copper, Zinc, and Lead Smelters. Volume I, Proposed Standards. EPA-450/2-74-002a. U.S. Environmental Protection Agency. Research Triangle Park, North Carolina. October 1974.

3. Jones, H.R. Pollution Control in the Nonferrous Metals Industry. Noyes Data Corporation. Park Ridge, New Jersey. 1972.

4. Compilation of Air Pollutant Emission Factors. AP-42. U.S. Environmental Protection Agency. Research Triangle Park, North Carolina. March 1975.

5. Hallowell, J.B. et al. Water Pollution Control in the Primary Nonferrous Metals Industry - Volume I. Copper, Zinc, and Lead Industries. EPA-R2-73-274a. U.S. Environmental Protection Agency. Washington, D.C. September 1973.

6. Development Document for Interim Final Effluent Limitations Guidelines and Proposed New Source Performance Standards for the Primary Copper Smelting Subcategory and the Primary Copper Refining Subcategory of the Copper Segment of the Nonferrous Metals Manufacturing Point Source Category. EPA-440/1-74/032-b. U.S. Environmental Protection Agency. Washington, D.C. February 1975.

TABLE 2-32. WATER REQUIREMENTS FOR COPPER REFINERIES (5)

Plant	Water intake, liters per metric ton of metal produced	Water consumed (Intake minus discharge), liters per metric ton of metal produced
A	4,000	4,000
B	9,000	700
C	13,000	1,200
D	3,000	1,900
E	6,000	0

TABLE 2-33. WASTE EFFLUENTS FROM ANODE COOLING WATER (6)

Parameter	Net change, mg/l	Net loading	
		kg/day	kg/metric ton
Chloride	8.7	7.8	0.029
Aluminum	0.12	0.11	0.0004
Arsenic	0.01	0.01	<0.0001
Copper	8.53	8.07	0.030
Zinc	0.25	0.24	0.0009
Flow, 10^6 l/day	0.95		
Production, metric ton/day	265		

Source: RAPP.

TABLE 2-34. CONTACT COOLING WATER CONTROL AND TREATMENT PRACTICES (6)

Plant code	Discharge	Control and/or treatment practice
1	0	Anode casting: water in closed circuit with cooling tower, cooling tower blowdown joins blowdown from wire-bar casting cooling tower blowdown, entire blowdown to side-stream filter, anticipate total water recycle.
2	0	Anode casting: water directly reused in mill concentrator circuit. No discharge.
3	0	Anode casting: water collected in mill tailings thickener, all flow recycled (with some evaporation) to mill concentrator. No discharge.
4	0	Blister cake cooling: air cooled with some water spray; spray water totally recycled from cooling pond. No discharge.
5	Intermittent	Fire-refined (cathode) - shape casting: water mostly recycled, with small intermittent discharge.
6	0	Fire-refined casting: water to thickener, overflow recycled. No discharge.
7	0	Anode casting: water in closed circuit with cooling tower, blowdown to evaporation pond. No discharge.
8	0	Anode casting: water in closed circuit with cooling tower, blowdown reused in mill concentrator. No discharge.
9	0	Anode casting: water to tailings thickener, reused in mill concentrator. No discharge.
10	0	Anode casting: water all used in mill concentrator circuit. No discharge.
11	0	Anode casting: water in closed circuit with 100 percent circulation. No discharge.
12	5670 m^3/day	Anode casting: water collected in slag settling pond, part is recirculated for slag granulation 53,000 m^3/day. Remainder 5700 m^3/day discharged to tailings ponds. Eventual (8 km of ponds) discharge.

TABLE 2-34 (continued).

Plant code	Discharge	Control and/or treatment practice
13	18 l/sec	Anode casting: once-through water, part used for shot copper cooling, remainder discharged.
14	∿340 m^3/day (125 l/sec, 45 min/day)	Shot copper cooling: Intermittent flow, all discharged. Plan to treat water in proposed treatment facility with anticipated discharge.
15	0	Blister cake cooling: water consumed during spraying and air cooling. No discharge.

Electrolytic Refining

1. Function - Although copper produced at a smelter contains less than 1 percent impurities, this is too much to meet most of today's quality specifications. The electrolytic refinery reduces the impurities to approximately 0.05 percent.

The refining is done by passing a direct current of electricity through two copper electrodes that are immersed in a bath of acidic copper sulfate solution. The anode is a casting of impure copper from the smelter, and the cathode is a "starting sheet" stripped from a previously refined block of electrolytic copper. The electric current causes the copper to dissolve from the anode and deposit at the cathode. Impurities either will not dissolve in the electrolyte, or will not plate out at the cathode, so they collect either as slimes in the bottom of the cell or as soluble ions in the electrolyte.

Fourteen electrolytic refineries are operating in the United States. Five are located near a copper smelter, and the others are distant from smelters.

2. Input Materials - The principal input is the anode castings from copper refining. About 85 percent of the anodes in use at any one time are directly from the smelter. The remainder are made at the refinery by melting and recasting partially electrolyzed anodes.

The electrolyte is sulfuric acid, which is either fresh acid or acid reclaimed from the electrolyte purification process (Process No. 20).

Various additives are used to ensure a smooth deposit at the cathode. Chlorides are added to cause silver to precipitate into the slimes.

3. Operating Conditions - Electrolytic cells are normally maintained at 60° to 65°C (1). Pressures are atmospheric.

4. Utilities - Electric power is the only source of energy. Approximately 175 to 220 kilowatt-hours are required to produce a metric ton of cathode copper (2). The direct current required for the cells is produced within the refinery by rectifiers or motor-generator sets. Additional electricity is required for the auxiliary materials handling equipment.

Water is used for washing the cathodes as they are removed from the cells. In most refineries, this is specially treated water, usually steam condensate, since untreated water contains minerals that affect the quality of the product. This same water is used for make-up to the electrolyte system to replace that lost in purge and evaporation.

5. Waste Streams - The only pollution of the air by an electrolytic refinery is a fine mist of sulfuric acid reported to be created near the electrodes. Data on this source of pollution are not available.

Most refineries reclaim the copper from impure solutions (see Process No. 20), but two do not, and therefore create a substantial liquid waste directly from the electrolytic cells. Table 2-35 gives the range of composition of the electrolyte solution, along with the composition of the refined copper and the slime that is recovered from the bottom of the cells.

Slime is periodically cleaned from the cells and processed for recovery of the gold, silver, and other valuable elements (see Process No's. 22 and 24). Because this slime represents a product of considerable value to the copper industry, procedures at most smelters are designed to place as much of these valuable elements as possible into the anode copper.

In any plant that handles highly corrosive liquids in large quantities, there are leakages, spills, and occasionally major discharges, frequently not expected and normally not included in waste tabulations.

No solid wastes are produced by an electrolytic refinery.

6. Control Technology - Of the two refineries that do not reclaim the impure electrolyte solution, one treats this stream separately by placing it in a lined pond and allowing it to evaporate to dryness. Climatic conditions at this site make this procedure workable. The other refinery follows a practice often used in the copper industry and mixes the solution with other wastes into a tailings pond, where lime is added to neutralize the acid. This refinery is also in an arid section of the country. Both refineries report no discharge into public waters. Ultimate disposal of the solids from these evaporations has not been reported.

Most refineries have demonstrated an economic benefit from the reclamation and partial recycle of spent electrolyte; this represents the best available control technology (see Process No. 20).

There are usually no controls specifically designed to handle spills, leakages, and accidental discharges of electrolyte.

7. EPA Source Classification Code - 303-005-05

8. References -

1. Development Document for Interim Final Effluent Limitations Guidelines and Proposed New Source Performance Standards for the Primary Copper Smelting Subcategory and the Primary Copper Refining Subcategory of the Copper Segment of the Nonferrous Metals Manufacturing Point Source Category. EPA 440/1-75/032-b. U.S. Environmental Protection Agency. Washington, D.C. February 1975.

2. Encyclopedia of Chemical Technology. Interscience Publishers, a division of John Wiley and Sons, Inc. New York. 1967.

3. Hallowell, J.B. et al. Water Pollution Control in the Primary Nonferrous Metals Industry - Volume I. Copper, Zinc, and Lead Industries. EPA-R2-73-274a. U.S. Environmental Protection Agency. Washington, D.C. September 1973.

TABLE 2-35. GENERAL RANGE ANALYSIS OF ELECTROLYTE, REFINED COPPER, AND ANODE SLIME[a] (2,3)

Constituent	Electrolyte, g/l	Refined copper, % weight	Raw slime, % weight (dry basis)
Sulfuric acid	170-230		
Copper	45-50	99.95	20-40
Oxygen		0.03-0.05	
Sulfur		0.001-0.002	2-6
Arsenic	0.5-12	0.0001-0.001	0.5-4.0
Antimony	0.2-0.7	0.0002-0.001	0.5-5.0
Bismuth	0.1-0.5	0.00001-0.00002	tr.
Lead		0.002-0.0010	2.0-15.0
Nickel	2.0-20.0	0.0001-0.002	0.1-2.0
Selenium		0.0003-0.001	1.0-20.0
Tellurium		0.0001-0.0009	0.5-8.0
Gold		0.68-0.242[b]	1714-10286
Silver		1.71-17.1[b]	34285-274283
Platinum		tr.	N.A.
Palladium		tr.	N.A.
Iron		tr.	0.1-0.2

[a] Extremes omitted.

[b] g/metric ton.

tr. = trace.

N.A. = Not available.

Electrolyte Purification

1. Function - In operation of the electrolytic cells in a refinery, certain impurities become dissolved in the electrolyte solution. If a portion of the electrolyte is not removed from the circulating stream, concentrations of these impurities will become so high that they begin to deposit at the cathode with the refined copper. In most cases, the purge stream is processed to recover some of its constituents.

All but two of the refineries in this country remove the copper from the purge stream. This is done in special "liberator" electrolytic cells that use insoluble lead anodes and sheets of copper as cathodes. The copper and frequently some of the impurities deposit on the cathode. The plates of copper are returned to the metallurgical processing either within the refinery or in the smelter, depending on quality. Some of the remaining impurities collect in the liberator cells as a sludge.

A few refineries recover a portion of the sulfuric acid from the purge stream by use of dialysis equipment. The dialyzers provide a partial separation of the acid and produce a stream in which impurities are more concentrated. The acid is returned to the electrolyte circulation.

Effluent from the liberator cells or the dialysis equipment may be concentrated further by removing water in vacuum evaporators. Concentration of the acid produces a sludge, which has a high concentration of nickel sulfate and usually contains iron and zinc. This sludge can be filtered out, and then part of the acid can be returned to the electrolyte system, or it may be discarded or sold.

Various refineries may practice all, part, or none of these treatments. Three refineries recover nickel. One refinery consumes all spent electrolyte in an associated chemical operation (1).

2. Input Materials - The input is the purge stream from the recirculating electrolyte. The range of analysis is given in Table 2-35 (Process No. 19). This shows it to be a stream of warm, concentrated acidic copper sulfate solution, also containing nickel, arsenic, antimony, and bismuth. Smaller quantities of iron, cobalt, zinc, lead, selenium, tellurium, and other elements are also found in the stream.

3. Operating Conditions - Temperatures are less than 100°C and pressures are atmospheric, except in some evaporation operations (2).

4. Utilities - Electricity is used to drive pumps and mechanical equipment, and to operate the liberator cells. Since the average concentration of salts in the liberator electrolyte is much less than in the main electrolytic cells, the liberator requires 2 to 5 times as much current to remove the same amount of copper. Usage is reported as 350 to 700 kilowatt-hours per metric ton (1).

Steam may be required for vacuum production, and fossil fuels may be used for direct-fired evaporation.

5. Waste Streams - The principal characteristic of the waste streams from electrolyte treatment is that, combined, they must contain almost all the arsenic, antimony, and bismuth that comes in with the anode copper (3). Some of these elements may be returned to the smelter with liberator cathodes, even though there is no way to dispose of them there. Examination of Table 2-31 (Process No. 18) shows that a ton of arsenic enters the electrolytic refinery with as little as 500 tons of anodes, and the best analysis shown in this table would provide a ton of arsenic waste for each 40,000 tons of copper.

Some of the arsenic is known to escape from the second stage of the liberator cells as arsine (AsH_3) (4). This very poisonous gas can accumulate to dangerous levels if the liberator cells are not well ventilated. Arsine will slowly oxidize in the atmosphere to arsenic trioxide and water. Quantities apparently have not been measured. This is also the only reference to arsenic in a waste stream from this process.

Unless all of these elements are returned to the smelter with the liberator cathodes, the arsenic, antimony, and bismuth must exit with a purge of electrolyte acid. It appears that accumulation of these elements must result in either continuous or occasional disposal of a quantity of "black acid", regardless of the extent of electrolyte treatment employed.

In some refineries evaporated water from the electrolyte constitutes another waste stream, which usually is mixed with volumes of steam condensate and direct cooling water in barometric leg discharge devices. Table 2-36 provides an analysis from such a source.

No solid wastes are discharged from this process.

6. Control Technology - Arsine formed in the liberator cells can be readily oxidized or can be scrubbed to form a liquid waste. Best control technology cannot be evaluated unless the order of magnitude of the quantity being released is known. If the amount is fairly large, it should be possible to design an oxidation process that could recover this as dry arsenic trioxide.

If it is possible to sell or give away the black acid to the fertilizer industry, as has been reported, the impurity elements would be transferred into the gypsum ponds from phosphate rock treatment. This would eliminate disposition in local tailings ponds, which are already loaded with metal ions from other sources. The neutral to acidic nature of phosphate ponds may cause a greater degree of precipitation of arsenic and antimony than would occur in the alkaline water designed to precipitate copper. On the other hand, phosphate ponds may already have a heavy load of radium, and are usually located in an area of greater precipitation than copper smelters. Further research to establish the compatibility of the wastes of these two industries is indicated.

TABLE 2-36. WASTE EFFLUENTS FROM $NiSO_4$ BAROMETRIC CONDENSER (1)

Parameter	Intake, mg/l	Discharge, mg/l	Net change, mg/l	Net loading kg/day
pH	6.5	6.6		
Alkalinity	90			
COD	750	450	neg	
Total Solids	21,080	24,000	2,920	
Dissolved Solids	21,060	24,000	2,920	
Suspended Solids	18	18		
Sulfate (as S)	1,722	1,060	neg	
Arsenic	<0.010	<0.010		
Cadmium	<0.20	<0.20		
Copper	<0.20	<0.20		
Iron	<0.50	1.30	<1.3	<15
Lead	<0.50	<0.50		
Nickel	<0.50	<0.50		
Zinc	<0.20	0.48	<0.48	<5.4
Flow, 10^6 l/day		11.4		
Production, metric ton/day		415		

For the effluent from a vacuum evaporator condenser, the best control technology is to avoid overloading the evaporator. Because of the low volatility of sulfuric acid and other components of this stream, evaporation of the water should be easy if the evaporator is properly designed, instrumented, and operated.

7. EPA Source Classification Code - None

8. References -

1. Development Document for Interim Final Effluent Limitations Guidelines and Proposed New Source Performance Standards for the Primary Copper Smelting Subcategory and the Primary Copper Refining Subcategory of the Copper Segment of the Nonferrous Metals Manufacturing Point Source Category. EPA 440/1-74/032-b. U.S. Environmental Protection Agency. Washington, D.C. February 1975.

2. Encyclopedia of Chemical Technology. Interscience Publishers, a division of John Wiley and Sons, Inc. New York. 1967.

3. Hallowell, J.B. et al. Water Pollution Control in the Primary Nonferrous Metals Industry - Volume I. Copper, Zinc, and Lead Industries. EPA-R2-73-274a. U.S. Environmental Protection Agency. Washington, D.C. September 1973.

4. Trace Pollutant Emissions from the Processing of Metallic Ores. PEDCo-Environmental Specialists, Inc. August 1974.

Melting and Casting Cathode Copper

1. Function - Refined copper from the electrolytic cells is melted and recast into the shapes required by fabrication industries. There is usually also a final adjustment of the oxygen content of the finished product.

Special equipment used for these operations ranges from direct-fired reverberatory furnaces to continuous casting machines. Electric arc and induction furnaces may be used to melt or hold the molten copper. The trend in this process is toward continuous or semicontinuous equipment to provide closer control of product quality and to minimize energy requirements.

2. Input Materials - The principal input is cathodes from the electrolytic cells. These are washed free of electrolyte and slime prior to delivery to this process.

Mold dressings such as bone ash may be used in some operations. For production of certain grades of copper, special oils, graphite, and phosphorous-copper alloys may be added at various stages in the process.

Use of reverberatory furnaces for this process requires addition of a flux and possibly a "poling" operation (1). This modification is comparable to fire refining and anode casting (Process No. 18).

3. Operating Conditions - Depending on the process details, temperatures range from 1150°C to 1215°C (2). Pressures are atmospheric. Special reducing atmospheres may be used in some operations. Open molds are usually cooled with water sprays to around 150°C.

4. Utilities - Electricity or fossil fuel may be used for melting. The newest electrical furnaces are reported to operate at high thermal efficiencies; power consumption is rated at 250 to 300 kilowatts for maintaining a molten charge of 55 to 90 metric tons of copper in an electric arc furnace (3).

Electricity is used to power materials handling and casting equipment.

Both contact and noncontact cooling waters are used to cool the casting equipment and the cast shapes. One refinery reports a water usage of 320,000 liters per day (4).

5. Waste Streams - Reverberatory furnaces, still occasionally used for refined copper melting, produce a gaseous discharge to the atmosphere; the quality of this emission has not been reported.

Table 2-37 provides the analysis of water used for cooling the refined copper shapes at two refineries. Another report showed an increase in chlorides of 58.6 grams per liter (3), but the origin of this ion was not defined.

TABLE 2-37. ANALYSIS OF WATER USED TO COOL REFINERY SHAPES (4)
(Concentrations in mg/l)

Parameter	Plant X		Semicontinuous cake casting	Plant Y	
	Inlet water	Wirebar cooling		Inlet water	Wirebar cooling recycle
pH	7.6	7-8	8.	7.1-7.6	8.0-8.4
TDS	1430.	1250.	1400.	0.2	0.1
TSS	0.0	12.5	0.0	0.5	0.4
SO_4	240.	240.	270.		
As	0.001	0.001	0.001	0.001	0.001
Cd	0.001	0.001	0.001	0.0008	0.0021
Cu	0.30	0.69	0.18	0.021	3.5
Fe	0.02	0.13	0.04	1.2	1.7
Pb	0.007	0.007	0.003	0.078	0.068
Hg	0.00350	0.00425	0.0001	0.00004	0.00004
Se	0.001	0.001	0.001	0.040	0.040
Te					
Zn	0.001	0.067	0.001	0.35	0.088
Oil and grease	0.0	2.0	0.0	0.14	0.1

There are no solid wastes from this process.

6. Control Technology - There is no control of air emissions from a melting or casting operation, and specific control is probably not required.

Water from this process is often cooled prior to discharge, but is not usually otherwise specially treated.

7. EPA Source Classification Code - 3-03-005-008

8. References -

1. Development Document for Interim Final Effluent Limitations Guidelines and Proposed New Source Performance Standards for the Primary Copper Smelting Subcategory and the Primary Copper Refining Subcategory of the Copper Segment of the Nonferrous Metals Manufacturing Point Source Category. EPA 440/1-75/032-b. U.S. Environmental Protection Agency. Washington, D.C. February 1975.

2. Encyclopedia of Chemical Technology. Interscience Publishers, a division of John Wiley and Sons, Inc. New York. 1967.

3. Trace Pollutant Emissions from the Processing of Metallic Ores. PEDCo-Environmental Specialists, Inc. August 1974.

4. Hallowell, J.B. et al. Water Pollution Control in the Primary Nonferrous Metals Industry - Volume I. Copper, Zinc, and Lead Industries. EPA-R2-73-274a. U.S. Environmental Protection Agency. Washington, D.C. September 1973.

Slime Acid Leach

1. Function - The first step in treatment of slimes from the cells of an electrolytic refinery is removal of the copper. This may be by direct roasting (Process No. 24), or the slimes may be first leached with acid to extract a portion of the copper prior to the roasting step. The acid leach is accomplished in a pressure filter, through which sulfuric acid is circulated. Copper dissolves in the acid as a solution of copper sulfate. This solution is either mixed with the electrolyte in the refinery cells (1), or with the electrolyte purge to the liberator cells, or may be used for copper sulfate production (Process No. 23).

2. Input Materials - The primary input is the slime from the electrolytic cells (Process No. 19), which may contain 20 to 40 percent copper (2). Small particles of metallic copper will be present.

Sulfuric acid is the leach solvent. Concentration and quantity of the acid vary with the slime composition.

3. Operating Conditions - There is normally no heating of the circulating solution, but chemical action may cause a slight temperature rise above ambient. Pressures are atmospheric to slightly higher, not exceeding one kilogram per square centimeter.

4. Utilities - A small quantity of electricity is used to power pumps for acid circulation. Water or steam concentrate is used to wash the leached slimes prior to transferring them to the roaster.

5. Waste Streams - A minor evolution of SO_2 in this process is due to the reaction of copper metal with the acid (3).

Except for accidental spills or pump leakage, there are no liquid or solid wastes. All materials are transferred to other processes.

6. Control Technology - If this were a larger-scale process, control of SO_2 by blending with other streams (if available) or by scrubbing would be the best control technology. Since quantities are small, none of the refineries control this emission except by local ventilation.

7. EPA Source Classification Code - None

8. References -

1. Development Document for Interim Final Effluent Limitations Guidelines and Proposed New Source Performance Standards for the Primary Copper Smelting Subcategory and the Primary Copper Refining Subcategory of the Copper Segment of the Nonferrous Metals Manufacturing Point Source Category. EPA 440/1-74/032-b. U.S. Environmental Protection Agency. Washington, D.C. February 1975.

2. Encyclopedia of Chemical Technology. Interscience Publishers, a division of John Wiley and Sons, Inc. New York. 1967.

3. Leigh, A.H. Precious Metals Refining Practice International Symposium on Hydrometallurgy. Chicago, Illinois. February 25 - March 1, 1973. pp. 95-110.

$CuSO_4$ Precipitation

1. Function - The function of this process is to precipitate copper sulfate in crystal form as a marketable by-product. The solution from water or acid leach constitutes part or all of the source. Copper powder is first added if there is excess acidity, and excess water is evaporated. When the mixture cools, crystals of copper sulfate form. The concentrated liquor either returns to the electrolytic cells or is transferred to chemical operations for the manufacture of other products. The crystals may be heated to remove water of hydration prior to sale.

2. Input Materials - The input is the leached solution from the Slime Acid Leach (Process No. 22), containing copper sulfate and sulfuric acid, or from the Slime Water Leach (Process No. 25), containing copper sulfate in water. Copper powder may also be added.

3. Operating Conditions - Atmospheric evaporators are usually used, with boiling temperatures less than 125°C. Crystallization occurs in atmospheric vessels. The crystals may be heated as high as 600°C after separation from the mother liquor if anhydrous copper sulfate is being produced (1).

4. Utilities - This is primarily a chemical type process, using either direct gas-fired or steam-heated evaporation equipment, noncontact cooling water for crystallization, and electricity for solution transfer and auxiliaries. Utility usage is not reported, but quantities are small.

5. Waste Streams - Use of copper powder for neutralizing excess acid will cause a slight evolution of SO_2, which will be stripped into the atmosphere during evaporation (2).

Water evaporated from the solution will condense as a wastewater, or will be lost into the atmosphere if direct-fired evaporators are used. Some carryover of entrained solution could occur. There are no reports of the waste from this source.

The process produces no solid wastes.

6. Control Technology - No controls are currently associated with this process. If quantities of SO_2 evolution were greater, scrubbing or mixing with another stream for combined SO_2 treatment would provide adequate control.

There is no report on the disposition of water from this source.

7. EPA Source Classification Code - None

8. References -

1. Encyclopedia of Chemical Technology. Interscience Publishers, a division of John Wiley and Sons, Inc. New York. 1967.

2. Leigh, A.H. Precious Metals Refining Practice International Symposium on Hydrometallurgy. Chicago, Illinois. February 25 - March 1, 1973. pp. 95-110.

Slimes Roasting

1. Function - Roasting of slimes from the cells of an electrolytic refinery allows removal of the copper content. A portion may be removed by acid leach of the slimes (Process No. 22). Heating the slimes in a strong acid environment converts the remaining copper to soluble copper sulfate, which can be removed by a subsequent water leach process (Process No. 25) (1). Roasting also converts some of the silver and tellurium to soluble salts and volatilizes some of the selenium.

2. Input Materials - The principal input is the slime materials, either direct from the electrolytic cells or as residue from acid leach.

Fluxes in the form of sulfuric acid and sodium sulfate are used to ensure complete reaction of almost all the copper present in the slime, which may be as much as 40 percent by weight of the slimes (2). One report gives the sulfuric acid consumption as 1.74 kilogram of acid per kilogram of slime treated (2).

Muds from the scrubber (Process No. 27) are also recycled to this roaster (3).

3. Operating Conditions - Temperatures in the roaster are maintained between 540° and 650°C. Pressures are atmospheric (1).

4. Utilities - Gas or oil is used for heating, and electricity for driving mechanical equipment. Quantities are not large, because of the small scale of this equipment.

5. Waste Streams - The gas leaving the roaster contains highly mineralized particulates and fumes. Roasting breaks down silver and copper selenides, releasing SeO_2 (1). Arsenic, tellurium, and trace amounts of lead also are present as fumes. The stream contains SO_2 and dusts, which consist of all the elements present in the slime. This gas stream normally passes to the scrubber (Process No. 27), but any loss can represent a hazardous waste. No analyses of this stream have been reported.

No liquid wastes are generated.

Solids from the roaster contain the most valuable metals, and are usually carefully transferred to the water leach equipment (Process No. 25). There is no solid waste.

6. Control Technology - Proper transfer of the highly mineralized gases from this process to the scrubber is the best control.

7. EPA Source Classification Code - None

8. References -

1. Leigh, A.H. Precious Metal Recovery Practice International Symposium on Hydrometallurgy. Chicago, Illinois. February 25 - March 1, 1973. pp. 95-110.

2. Encyclopedia of Chemical Technology. Interscience Publishers, a division of John Wiley and Sons, Inc. New York. 1967.

3. Development Document for Interim Final Effluent Limitations Guidelines and Proposed New Source Performance Standards for the Primary Copper Smelting Subcategory and the Primary Copper Refining Subcategory of the Copper Segment of the Nonferrous Metals Manufacturing Point Source Category. EPA 440/1-75/032. U.S. Environmental Protection Agency. Washington, D.C. February 1975.

Slime Water Leach

1. Function - The objective of this process is to reprecipitate all the silver and tellurium that has been made water-soluble in the roasting process, and to dissolve and separate all the soluble copper (1).

Powdered copper is added to roasted solids in calculated quantity (2). The mixture is then slurried with water in a tank, and by a cementation reaction, the silver and tellurium are precipitated. The mixture is allowed to stand to cause these reactions to approach completion and to allow the solids to settle. The liquid is then decanted off, and the slurry is filtered. The liquid solution of copper sulfate returns to the electrolytic cells or is used for copper sulfate production (Process No. 23). The filter cake is transferred to the Doré Furnace (Process No. 26) (3).

2. Input Materials - Roasted slime from Process No. 24 is the principal input. Powdered copper in slightly less than stoichiometric proportions is added. Water is also added.

3. Operating Conditions - The temperature in the leach tank is less than 100°C, but is not carefully controlled (3). Pressures are atmospheric, rising to less than 3 kilograms per square centimeter during filtering.

4. Utilities - No external heat is added to this process. The hot solids from the roaster add incidental heat.

Either deionized water or steam condensate is used to prevent introduction of foreign elements into the electrolyte solution.

5. Waste Streams - Except for accidental spills, no wastes are generated by this process.

6. Control Technology - None

7. EPA Source Classification Code - None

8. References -

1. Encyclopedia of Chemical Technology. Interscience Publishers, a division of John Wiley and Sons, Inc. New York. 1967.

2. Development Document for Interim Final Effluent Limitations Guidelines and Proposed New Source Performance Standards for the Primary Copper Smelting Subcategory and the Primary Copper Refining Subcategory of the Copper Segment of the Nonferrous Metals Manufacturing Point Source Category. EPA 440/1-75/032-b. U.S. Environmental Protection Agency. Washington, D.C. February 1975.

3. Leigh, A.H. Precious Metals Refining Practice International Symposium on Hydrometallurgy. Chicago, Illinois. Feburary 25 - March 1, 1973. pp. 95-110.

Doré Furnace

1. Function - This process separates the trace elements contained in the slimes into several distinct fractions, each of which is either sold or further treated. The most valuable fraction is a Doré metal, consisting primarily of silver, gold, and the platinum group metals.

The equipment is a special small reverberatory furnace, which removes groups of elements in separate slag-producing steps. The filter cake from the water leach process is mixed with a silica flux, charged into the furnace, and heated. A slag forms, containing primarily the lead, iron, arsenic, and antimony (1). This "sharp slag" is withdrawn and can be sent for further processing to a lead smelter. Sodium salts are then added to the furnace, and a soda slag forms. This slag contains selenium and tellurium and any residual arsenic and antimony (2) and is further treated (see Process No. 28). An oxidative slag is then formed by blowing air through the molten metal (3), removing bismuth and any remaining copper. This slag is returned to the copper smelter. At least one refinery performs a final cleanup using Portland cement, which returns to the Doré furnace at the start of the next charge.

The Doré metal that remains may be sold to a specialty processor, or may be further refined (see Process No. 30). Table 2-38 gives the approximate range of analysis.

Table 2-38. DORÉ METAL ANALYSIS (2)

	% Weight
Gold	8 to 9%
Silver	90 to 92%
Copper	0.5 to 1.0%
Palladium	0.16 to 0.18%
Platinum	0.05 to 0.009%
Lead	0.02%
Tellurium	0.003%
Selenium	0.00002%

2. Input Materials - Filter cake from the water leach process is the primary input. The slimes at this stage are fairly low in copper content; they contain about 18 percent water (2) and no sulfur.

Silica sand is the first flux, and a 2:1 mixture of sodium carbonate and sodium nitrate is the second. Quantities depend on the analysis of the filter cake (4). Portland cement is used in very small quantities (2).

3. Operating Conditions - Temperatures in the furnace rise as high as 1400°C. Pressures are atmospheric (1).

4. Utilities - Gas or oil fuel a Doré furnace (1,2). Compressed air is used in the third stage slagging operation. Electricity is not required except for auxiliary purposes.

5. Waste Streams - Flue gas temperatures may reach 1370°C (2). The stream may be high in particulate matter and in fumes containing selenium, tellurium, some arsenic, antimony, and lead. These are normally sent to a wet scrubber (Process No. 27). The precious metals content of the particulate matter is high enough that care is taken to collect them, but no analyses have been reported.

There are no liquid wastes from the Doré furnace.

This process produces no solid wastes if all the slags are processed or recycled as outlined above. The soda slag would be especially troublesome if it became a solid waste, since it is rich in soluble oxidized salts of arsenic, antimony, tellurium, and selenium.

6. Control Technology - Wet scrubbing of the gases for removal of particulates and fumes is the best control of this gas stream.

Care should be taken in the handling of slags from the Doré furnace to avoid secondary water pollution from this source.

7. EPA Source Classification Code - None

8. References -

1. Encyclopedia of Chemical Technology. Interscience Publishers, a division of John Wiley and Sons, Inc. New York. 1967.

2. Leigh, A.H. Precious Metal Refining Practice International Symposium on Hydrometallurgy. Chicago, Illinois. February 25 - March 1, 1973. pp. 95-110.

3. Development Document for Interim Final Effluent Limitations Guidelines and Proposed New Source Performance Standards for the Primary Copper Smelting Subcategory and the Primary Copper Refining Subcategory of the Copper Segment of the Nonferrous Metals Manufacturing Point Source Category. EPA 440/1-75/032-b. U.S. Environmental Protection Agency. Washington, D.C. February 1975.

4. Hallowell, J.B. et al. Water Pollution Control in the Primary Nonferrous Metals Industry - Volume I. Copper, Zinc, and Lead Industries. EPA-R2-73-274a. U.S. Environmental Protection Agency, Washington, D.C. September 1973.

Scrubber

1. Function - Gases from the slimes roaster and the Doré furnace contain particulates in quantities that justify their recovery for further processing. The gases also contain fumes, especially of selenium, which hydrolyze in the water scrubber, allowing their separation for sale.

The scrubbers are generally of the water spray type (1), with the water continuously recirculating. As solid material accumulates, periodic blowdown is performed. The amorphous selenium is often removed by flotation (2), or occasionally the blowdown is combined with the soda slag leach liquor (Process No. 28). Muds from the scrubber are recycled to the slimes roaster (Process No. 24).

2. Input Materials - Flue gases from the Doré furnace and the slimes roaster are the principal inputs.

If flotation recovery of selenium from the blowdown is practiced, methylamyl alcohol and liquid colloid glue are used as flotation reagents (2).

3. Operating Conditions - The gases entering the scrubber are extremely hot, about 1000° to 1300°C. The water sprays are at ambient temperatures (3). Pressures are near atmospheric.

4. Utilities - Water is used as makeup to replace evaporation losses and electricity is used to drive the exhaust blower. Quantities are not large.

5. Waste Streams - Gases leaving the scrubber may contain particulates and fumes that were not removed. Selenium is expected to be a major constituent.

If all the scrubbing liquor and particulates are recycled to previous operations, no liquid or solid wastes are produced.

6. Control Technology - Most refiners find it economical to install electrostatic precipitators on the scrubber effluent to remove the highly metalliferous dusts and fumes that escape collection. The use of a more efficient venturi-type scrubber would also be an acceptable control.

7. EPA Source Classification Code - None

8. References -

1. Development Document for Interim Final Effluent Limitations Guidelines and Proposed New Source Performance Standards for the Primary Copper Smelting Subcategory and the Primary Copper Refining Subcategory of the Copper Segment of the Nonferrous Metals Manufacturing Point Source Category. EPA 440/1-75/032-b. U.S. Environmental Protection Agency. Washington, D.C. February 1975.

2. Leigh, A.H. Precious Metals Refining Practice International Symposium on Hydrometallurgy. Chicago, Illinois. February 25 - March 1, 1973. pp. 75-110.

3. Particulate and Sulfur Dioxide Emission Control Cost Study of the Electric Utility Industry. 68-01-1900. U.S. Environmental Protection Agency. Washington, D.C.

Soda Slag Leach

1. Function - The soda slag, the second slag removed from the Doré furnace, is rich in selenium and tellurium, both of which are marketable by-products (1). The function of this leach process is to selectively dissolve these elements from the slag (2).

The slag is leached in a tank of water, which becomes alkaline because of the sodium oxide content of the slag. Selenium and tellurium dissolve as sodium selenite and tellurite (3). The resulting solution is filtered from the insoluble components of the slag, and the solids are returned to the Doré furnace for reprocessing. The leached solution is further treated (see Process No. 29).

2. Input Materials - The soda slag from the Doré furnace is the only input.

3. Operating Temperature - Residual heat in the slag and chemical action between the slag and the water cause some temperature increase during leaching, to less than 100°C (2,4). Pressures are atmospheric during the leach, and less than 2 kilograms per square centimeter during filtration.

4. Utilities - Water is required as the leaching solvent.

The literature does not state whether supplemental heat is required during this step.

Electricity in small quantity is used to pump the leached slurry through the filter.

5. Waste Streams - There are no gas, liquid, or solids wastes from this process. All materials at this stage are valuable and are carefully handled (3).

6. Control Technology - None is required.

7. EPA Source Classification Code - None

8. References -

1. Encyclopedia of Chemical Technology. Interscience Publishers, a division of John Wiley and Sons, Inc. New York. 1967.

2. Leigh, A.H. Precious Metal Recovery Practice International Symposium on Hydrometallurgy. Chicago, Illinois. February 25 - March 1, 1973. pp. 95-110.

3. Development Document for Interim Final Effluent Limitations Guidelines and Proposed New Source Performance Standards for the Primary Copper Smelting Subcategory and the Primary Copper Refining Subcategory of the Copper Segment of the Nonferrous Metals Manufacturing Point Source Category. EPA 440/1-75/032-b. U.S. Environmental Protection Agency. Washington, D.C. February 1975.

4. Hallowell, J.B. et al. Water Pollution Control in the Primary Nonferrous Metals Industry - Volume I. Copper, Zinc, and Lead Industries. EPA-R2-73-274a. U.S. Environmental Protection Agency. Washington, D.C. September 1973.

Selenium and Tellurium Recovery

1. Function - The processing solutions which have become rich in selenium and tellurium are treated in laboratory-scale equipment to recover these elements as by-products (1). Both are valuable for use in manufacture of electrical and electronic products, and in xerographic copying machines.

The alkaline solutions are made acidic with sulfuric acid to a pH of 5.5 to 6.5 (2,3). Tellurous acid (H_2TeO_3) precipitates, and is removed by filtration. Then the solution is treated by bubbling SO_2 through it. Selenium and any remaining tellurium precipitate in elemental form, and can be selectively separated by several stages of precipitation and filtration. Both are dried to become marketable products, or they may be further purified prior to sale.

The crude tellurous acid is dissolved in caustic, treated with sodium sulfide to precipitate impurities, and filtered. The clear solution is again acidified, and the pure tellurous acid again precipitates. When filtered and dried, it can be sold in this form or may be further processed to elemental tellurium.

A number of purification and reduction processes are used to produce pure materials. All are very small-scale operations.

Only a very small percentage of the tellurium in the original copper ore is reclaimed. Ninety percent is lost during ore flotation, while in each subsequent processing step, from 20 to 60 percent of the tellurium that remains is lost (4). Selenium recovery is reported to be much higher - recovery of 80 percent, with the remainder lost to slags, flue dusts, and gases (4).

2. Input Materials - The principal input is the filtered solution from soda slag leaching (Process No. 28), to which are added selenium and tellurium extracted or floated from scrubber precipitates (Process No. 27).

Laboratory-grade reagents are normally used, such as sulfuric acid, sodium hydroxide, compressed and liquified SO_2, and others. Quantities are very small.

3. Operating Conditions - Temperatures may reach 450°C during some purification steps. Pressures are normally atmospheric.

4. Utilities - A variety of laboratory utilities may be employed. Consumption of each is negligible.

5. Waste Streams - No gas or solid wastes are generated by this process in anything other than trace amounts.

Liquids are low in volume and normally discharge through standard laboratory waste systems.

6. Control Technology - None applicable

7. EPA Source Classification Code - None

8. References -

1. Leigh, A.H. Precious Metal Recovery Practice International Symposium on Hydrometallurgy. Chicago, Illinois. February 25 - March 1, 1973. pp. 95-110.

2. Development Document for Interim Final Effluent Limitations Guidelines and Proposed New Source Performance Standards for the Primary Copper Smelting Subcategory and the Primary Copper Refining Subcategory of the Copper Segment of the Nonferrous Metals Manufacturing Point Source Category. EPA 440/1-75/032-b. U.S. Environmental Protection Agency. Washington, D.C. February 1975.

3. Hallowell, J.B. et al. Water Pollution Control in the Primary Nonferrous Metals Industry - Volume I. Copper, Zinc, and Lead Industries. EPA-R2-73-274a. U.S. Environmental Protection Agency. Washington, D.C. September 1973.

4. Encyclopedia of Chemical Technology. Interscience Publishers, a division of John Wiley and Sons, Inc. New York. 1967.

Doré Metal Separation

1. Function - In a series of complex chemical and electrochemical laboratory operations, the Doré metal, a mixture primarily of silver, gold, and the platinum group metals, is separated into specification grades of each of these metals (1).

A special small electrolytic cell, the Moebius cell, is used to separate the silver, which is further processed to produce bullion bars, analyzed at 99.97 percent silver, of 1000 troy ounces each (2,3).

Mud from the Moebius cell is melted into anodes and processed in another special electrolytic device, the Wohlwill cell, which produces gold of marketable quality.

The remaining electrolyte is chemically processed to separate platinum, palladium, and occasionally other metals. Iridium, rhodium, ruthenium, and others may be present.

2. Input Materials - The principal input is Doré metal (see Process No. 26).

Small quantities of many inorganic chemicals are used. The list includes sulfuric, nitric, and hydrochloric acids, powdered iron and copper metals, and sulfur dioxide.

3. Operating Conditions - Temperatures during the various steps of processing range up to 1300°C in the casting of the metals, but most operations are at less than 100°C. No unusual laboratory pressures are employed.

4. Utilities - Electricity is used for the electrochemical operations, and either electricity or gas for operation of the casting furnace. Utility consumption is negligible in comparison with other processes in this industry.

5. Waste Streams - insignificant. No losses of unusual metallic elements occur in this process. There are minor evolutions of nitrous oxides, sulfuric acid mists, and other acid fumes, and occasional liquid discharges of electrolyte acids in quantities of a few gallons at most. No solid wastes are produced, although residues may occasionally be returned to the Doré furnace.

6. Control Technology - Local ventilation is the only control exercised for this process.

7. EPA Source Classification Code - None

8. References -

1. Development Document for Interim Final Effluent Limitations Guidelines and Proposed New Source Performance Standards for the Primary Copper Smelting Subcategory and the Primary Copper Refining Subcategory of the Copper Segment of the Nonferrous Metals Manufacturing Point Source Category. EPA 440/1-75/032-b. U.S. Environmental Protection Agency. Washington, D.C. February 1975.

2. Encyclopedia of Chemical Technology. Interscience Publishers, a division of John Wiley and Sons, Inc. New York. 1967.

3. Leigh, A.H. Precious Metal Refining Practice the International Symposium on Hydrometallurgy. Chicago, Illinois. February 25 - March 1, 1973. pp. 95-110.

Vat Leaching

1. Function - Vat leaching is a simple form of hydrometallurgy in which copper is dissolved from oxide ores to form aqueous solutions. The leaching takes place in an arrangement of tanks or vats.

Oxidized copper minerals, occurring as partially weathered deposits in the mine, cannot easily be processed by conventional smelting processes. These deposits are selectively mined and crushed to about 1 to 1.25 centimeters (1). The crushed ore is then placed in concrete vats of up to 18,000 metric tons capacity, and subjected to alternate flooding with sulfuric acid and draining. After the copper oxides are converted to soluble copper sulfate, the remaining soluble copper is removed by a countercurrent wash of fresh water. The vat floor is a filter which facilitates upflow and downflow of wash and leach solutions. The resulting solutions are too dilute for electrowinning; they are usually treated by cementation (Process No. 33) or solvent extraction (Process No. 34) (1).

One proprietary process has been developed for vat leaching of a roasted sulfide ore in which the sulfide ore is converted into sulfates prior to hydrometallurgical processing (see Process No. 36).

Vat leaching is similar in principal to the leaching of sulfide ores (Process No. 32), but the vat leaching operations are usually more carefully controlled and result in lower potential for damage to the environment. Vat leaching is the most efficient process yet developed for the recovery of copper values from oxidized copper minerals.

2. Input Materials - The principal input is the oxide ore material, as described above.

Sulfuric acid has been the only solvent used for simple leaching since it is not only inexpensive and nonvolatile, but also has a slight selective action for copper. Consumption will vary, but extraction of a metric ton of copper from a 1 percent ore body containing oxidized minerals will require about 4400 liters of 96 percent acidity (2).

3. Operating Conditions - The process operates at atmospheric pressure and ambient temperatures.

4. Utilities - Diesel fuel and electricity are used in the materials handling operations, and electricity in pumping the leach solution. Process water must be added to most of these operations, since in this country they are located in arid regions with high evaporation losses. In 1973 water usage was 50 to 200 cubic meters per metric ton of copper precipitate (2).

5. Waste Streams - Vat leaching produces a large amount of tailings of waste rock that is sluiced into a tailings pond. This material is comparable with the waste from a concentrator plant (Process No. 2). Frequently the same pond is used for both concentrator and vat-leaching tailings.

The circulating stream of a leaching operation may become so rich in impurities that it must be discarded. No analyses have been reported; the volume is reported as varying from 350,000 to 1,000,000 liters of spent liquor per metric ton of copper produced (3).

6. Control Technology - Most installations mix the discharge of this process with mining or concentrating wastes. Control is described in connection with Process No's. 1 and 2.

7. EPA Source Classification Code - None

8. References -

1. Williams, Roy E. Waste Production and Disposal in Mining, Milling and Metallurgical Industries. Miller Freeman Publications, Inc. San Francisco. 1975.

2. Roberts, R.W. San Xavier Vat Leach Plant Operation. Mining Congress Journal. December 1974.

3. Davis, W.E. National Inventory of Sources and Emissions: Copper, Selenium, and Zinc. PB 210-677, 678, and 679. U.S. Environmental Protection Agency. Research Triangle Park, North Carolina. May 1972.

Sulfide Ore Leaching

1. Function - Heap and dump leaching are simple forms of hydrometallurgy in which copper is dissolved from sulfide ores to form aqueous solutions. In heap leaching, the ore is placed in a pile on the ground. In dump leaching, the overburden and low grade waste from the mine are leached in the dumps formed during the mining operation. In situ and thin layer leaching may also be utilized for sulfide ores.

This process is an accelerated form of natural weathering. It is usually applied to low-grade ore that contains less than 0.4 percent copper (1,2,3). Material is placed in an area provided with drainage ditches and basins, and is alternately flooded with sulfuric acid solution and allowed to drain. This procedure causes rapid oxidation of the copper minerals. Soluble copper sulfate is formed, and washes from the heap with the acid solution. From 70 to 82 percent of the copper in these low-grade ores can be recovered (3,4). The liquor that seeps from the heap has a pH of 1.5 to 2.5 (5) and may contain from 1.0 to 18 grams of copper per liter (4,5).

In the leaching of sulfide ores, barren solutions of sulfuric acid from a copper cementation process are applied originally, after which only makeup water is required periodically to sustain the leaching process. Water and oxygen react with pyrite in the dump to generate sulfuric acid and ferric sulfate; this solution effectively dissolves the copper present. If the ores contain significant amounts of oxides or carbonates, sulfuric acid must be added periodically. A dump leaching site is characterized by a grid of ponds that collect the pregnant leach liquor (6).

In situ leaching involves breaking the ore in place and alternately circulating air and leach solution through the fractured material. The pregnant liquor is collected in a system of tunnels.

A recent modification of sulfide ore leaching is the "thin layer" process, in which still further acceleration of the weathering reactions is brought about by spreading the ore thinly over a large surface area. This modification is in use in South America, but has not been reported to be in use in this country.

These techniques of hydrometallurgy allow the extraction of copper from low-grade ores without evolution of sulfur dioxide. These can be small operations that require less capital expenditure than pyrometallurgical processing. The overall cost to produce a ton of copper is greater, however, and there is no way in simple leaching to recover the precious metals content of the ores.

2. Input Materials - The principal input is the ore materials, as described above. In most cases, these would otherwise be waste materials, unprofitable to process by conventional techniques.

Sulfuric acid is the leaching chemical. To some extent, leaching operations are practiced as a means for disposition of excess smelter acid. Consumption will vary and will depend largely on the composition of the gangue rock. If there is no limestone in the gangue, very little acid is consumed.

3. Operating Conditions - Since the process occurs in an open, outdoor area, it operates at atmospheric pressure and ambient temperatures.

4. Utilities - Diesel fuel and electricity are used in the materials handling operations, and electricity in pumping the leach solution. Process water must be added to most of these operations, since in this country they are located in arid regions with high evaporation losses. In 1973, water usage in heap leaching ranged from 920 to 4850 cubic meters per metric ton of crude copper precipitate produced (4).

5. Waste Streams - Wastes from heap leaching include fugitive dusts from materials handling, and quantities of highly mineralized solid wastes containing residual sulfuric acid. It is usually difficult to separate these wastes from those of the mining process, as discussed in more detail in Process No. 1.

The circulating stream of a leaching operation may become so rich in impurities that it must be discarded. No analyses have been reported; the volume is reported as varying from 350,000 to 1,000,000 liters of spent liquor per metric ton of copper produced (7).

6. Control Technology - Most installations mix the discharge of this process with mining or concentrating wastes. Control is described in connection with Process No's. 1 and 2.

7. EPA Source Classification Code - None

8. References -

1. Background Information for New Source Performance Standards: Primary Copper, Zinc, and Lead Smelters. Volume I, Proposed Standards. EPA-450/2-74-002a. U.S. Environmental Protection Agency, Research Triangle Park, North Carolina. October 1974.

2. Copper Hydrometallurgy: The Third-Generation Plants. Engineering and Mining Journal. June 1975.

3. Encyclopedia of Chemical Technology. Interscience Publishers, a division of John Wiley and Sons, Inc. New York. 1967.

4. Roberts, R.W. San Xavier Vat Leach Plant Operation. Mining Congress Journal. December 1974.

5. Gardner, S.A. and G.C.I. Warwick. Pollution-Free Metallurgy: Copper via Solvent-Extraction. Engineering and Mining Journal. April 1971.

6. A Study of Waste Generation, Treatment and Disposal in the Metals Mining Industry. PB-261 052. U.S. Environmental Protection Agency, Washington, D.C. October 1976.

7. Davis, W.E. National Inventory of Sources and Emissions: Copper, Selenium, and Zinc. PB-210 679, PB-210 678, and PB-210 677. U.S. Environmental Protection Agency. Research Triangle Park, North Carolina. May 1972.

Cementation

1. Function - The cementation process converts soluble copper into a metallic precipitate through chemical reaction with metallic iron. It is used to recover copper from strong solutions created by other processes, especially those from heap and vat leaching.

This process is dependent upon the relative activity of a metal to become a soluble ion. Metals can be listed in a continuous electromotive series; iron, having higher activity, will preferentially replace a copper ion in solution and thus produce an insoluble precipitate, often called "cement copper". In a typical application, liquor draining from a heap leaching operation flows through a trough that is filled with scrap iron. Part of the copper precipitates, and the liquor is recycled back to the heap. It is reported that 94 percent of the copper can be recovered by this method (1,2).

Periodically, the trough is cleaned and the cement copper is sent to a smelter for processing. The cement copper is usually a mixture of copper with iron compounds and other insoluble minerals. The copper content is generally around 70 percent and is rarely more than 90 percent (1,3).

In many of its applications, cementation is being replaced by solvent extraction and electrowinning techniques (see Process No's. 34 and 35).

The term cementation is also applied in this industry to other similar chemical reactions. Zinc metal is used in cementation of gold and copper, and copper powder is used in cementation of silver (4).

2. Input Materials - Aqueous liquors containing dissolved copper are the principal input. The process is efficient only with fairly concentrated solutions.

Scrap iron is most commonly used for cementation if it can be obtained. Because it is becoming difficult to obtain sufficient scrap of good quality, a process for manufacture of a sponge iron is in the final steps of development (see Process No. 37).

3. Operating Conditions - Cementation processes normally operate at atmospheric pressure and ambient temperatures.

4. Utilities - No utilities are consumed unless special pumps are required to cause the liquor to flow through the cementation tanks.

5. Waste Streams - Atmospheric pollution from the cementation process is negligible. There may be tiny amounts of hydrogen gas created by a side reaction of acid with the iron.

No liquid wastes can be directly assigned to this process when used as an auxiliary to a larger liquid handling operation. In the case of a separate operation, analysis of a typical treated leach liquor is presented below in Table 2-39.

TABLE 2-39. ANALYSIS OF TAILINGS EFFLUENT FROM A PRECIPITATION PLANT (5)

Parameter	Maximum, mg/l	Minimum, mg/l	Average, mg/l
Sulfate	53,000	33,000	38,882
Copper	76.3	27.7	52.2
Iron	3100	2050	2632
Lead	0.92	0.05	0.67
Mercury	0.0006	0.0001	0.0003
Selenium	0.95	0.01	0.12
Zinc	146	129	136

Solid wastes resulting from cementation includes scrap iron partially used, discarded, or abandoned, causing some of these operations to resemble a junk yard.

6. Control Technology - No controls are specific to this process.

7. EPA Source Classification Code - None

8. References -

1. Encyclopedia of Chemical Technology. Interscience Publishers, a division of John Wiley and Sons, Inc. New York. 1967.

2. Roberts, R.W. San Xavier Vat Leach Plant Operation. Mining Congress Journal. December 1974.

3. Background Information for New Source Performance Standards: Primary Copper, Zinc, and Lead Smelters. Volume I, Proposed Standards. EPA-450/2-74-002a. U.S. Environmental Protection Agency, Research Triangle Park, North Carolina. October 1974.

4. Development Document for Interim Final and Proposed Effluent Limitations Guidelines and New Source Performance Standards for the Ore Mining and Dressing Industry. Point Source Category, Volumes I and II. EPA/1-75/032-6. U.S. Environmental Protection Agency. Washington, D.C. February 1975.

5. Personal Communication with J.V. Rouse, U.S. Environmental Protection Agency. National Enforcement Investigations Center. Denver, Colorado. 1976.

Solvent Extraction

1. Function - As applied in the copper industry, solvent extraction is a method to produce a concentrated copper solution, relatively free of other metal ions, from a solution of copper that does contain other dissolved metals. The process uses a special mixture of organic solvents in an agitated vessel. When the solvents are mixed with the impure solution, the copper combines with the solvents as a complex. Agitation of the vessel is then stopped and the solvents, now containing the copper, form a separate layer. The water layer is drained off. Sulfuric acid is then mixed with the solvent. This breaks down the complex and regenerates the solvent for reuse. The copper is withdrawn as a solution in the acid.

Solvent extraction has been applied to liquors from vat leaching, and it is being incorporated into some of the developing hydrometallurgical processes (1). The concentrated acid solution can be directly treated by electrowinning (see Process No. 35). This process can also be made continuous, rather than batch, to adapt it to large-scale operations.

It is reported that about 95 percent of the copper in a solution can be extracted by this technique (2).

2. Input Materials - Water solutions of copper are the primary input. There is no published information on the composition ranges that can be efficiently treated with this process.

The solvents mixture is kerosene containing about 12 percent of a proprietary chemical made by General Mills called LIX (3,4). The total rate of recycle is not known, but losses of 0.1 liter per 1000 liters of impure solution have been reported (4). Two other chemicals, "Kelex" and "Shell 529," are also being advertised for this application.

Concentrated sulfuric acid is required (normally recycled through electrowinning cells), but quantities have not been reported.

3. Operating Conditions - No special temperature limits are reported; it is assumed that ambient temperatures and atmospheric pressure are satisfactory.

4. Utilities - A small amount of electricity is required for agitation and liquid pumping.

5. Waste Streams - There are no reports of atmospheric pollution from this process. For operating safety, evaporation of the solvent is undoubtedly minimized.

The manufacturer of the LIX solvent states that small amounts of iron, arsenic, and zinc are extracted along with the copper (1). The procedure for disposal of these materials has not been reported. It is likely that there

will be a bleed of the concentrated acid to prevent accumulation of these other elements.

The loss of solvent is reported as 1 liter per 10,000 liters of raffinate (2). It is likely that this is almost entirely kerosene, which has a slight water solubility. The more expensive chelating compounds should stay largely dissolved in the kerosene layer. No confirmation of this has been published.

No solid wastes are generated by this process.

6. Control Technology - No special controls are indicated. The possible acid blowdown should be of a quality that could be reused in other processes. The organic loss would be biodegradable if this waste stream were combined into other wastewaters.

7. EPA Classification Code - None

8. References -

1. In Clean-Air Copper Production, Arbiter is First off the Mark. Engineering and Mining Journal. 1973.

2. Gardner, S.A. and Warwick, G.C.I. Pollution-Free Metallurgy: Copper via Solvent-Extraction. Engineering and Mining Journal. April 1971.

3. Background Information for New Source Performance Standards: Primary Copper, Zinc, and Lead Smelters. Volume I, Proposed Standards. EPA-450/2-74-002a. U.S. Environmental Protection Agency. Research Triangle Park, North Carolina. October 1974.

4. Ion Exchange: The New Dimension in Copper Recovery Systems. Engineering and Mining Journal. June 1975.

Electrowinning

1. Function - Electrowinning is a process for the extraction of relatively pure copper metal from a solution containing copper ions. This is an electrolytic process, similar to the cells of an electrolytic refinery (see Process No. 19), except than an inert anode is used. Copper metal deposits at the cathode, and the water in the solution is electrolytically decomposed, liberating oxygen at the cathode, and regenerating the sulfate ion as sulfuric acid.

If the copper solution is relatively pure, the copper produced by electrowinning is comparable with the best electrolytic copper, assayed as 99.9 percent plus (1). If impure solutions direct from vat leaching are used, the purity is equivalent to that of the anode copper from a conventional smelter and the product thus requires electrolytic refining prior to sale.

2. Input Materials - Electrowinning is in use to recover copper directly from vat leaching solutions (Process No. 31), and from purified solution from solvent extractions (Process No. 34). It is also being tested as a part of some of the more sophisticated hydrometallurgical processes that are being developed, in which chlorides rather than sulfates will be the input materials (see Process No. 38) (2).

Additives to produce a uniform cathode deposit are necessary. They are the same as for electrolytic refining. One report lists glue for electrowinning being added at a rate of 0.02 to 0.06 kilogram per metric ton of cathode copper (3).

3. Operating Conditions - Electrowinning cells are maintained at about 60° to 65°C and at atmospheric pressure (2,3).

4. Utilities - Electrowinning requires 8 to 10 times as much electric current as does an electrolytic refining cell to produce the same amount of copper (3). In a loop with a solvent extraction process, 2.44 kilowatt-hours are required to produce a kilogram of copper (4). In direct electrowinning of a vat or heap leach solution 2.79 kilowatt-hours per kilogram of copper are required (3). These high values reflect the energy required to dissociate water into its elements and are the principal reason that the simple hydrometallurgical processes have been more expensive than conventional smelting.

A small amount of water is used to clean the cathodes after removing them from the cell.

5. Waste Streams - The oxygen produced at the anode of an electrowinning cell can be considered either as an atmospheric emission or as a by-product. If it is discarded to the atmosphere, there are no deleterious environmental effects.

A small amount of liquid waste may be discharged in connection with cleaning of the completed cathodes. No reports of this source have been published.

The possible larger purge of electrolyte, necessary to prevent accumulation of other elements, was discussed in connection with Process No's. 31, 32, and 34.

There are no solid wastes from this process.

6. Control Technology - No special controls are applicable to the wastewater that may develop from this process.

7. EPA Source Classification Code - 3-03-005-0

8. References -

1. Gardner, S.A. and Warwick, G.C.I. Pollution-Free Metallurgy: Copper via Solvent-Extraction. Engineering and Mining Journal. April 1971.

2. Atwood, G.E., and Curtis, C.H. Hydrometallurgical Process for the Production of Copper. U.S. Patent No. 3,785,944. January 15, 1974.

3. Encyclopedia of Chemical Technology. Interscience Publishers, a division of John Wiley and Sons, Inc. New York. 1967.

4. Ion Exchange: The New Dimension in Copper Recovery Systems. Engineering and Mining Journal. June 1975.

Sulfation Roasting

1. Function - One company has developed a hybrid process that will use a fluidization roaster (Process No. 4) to prepare a calcine especially suited to vat leaching (Process No. 31). This is the technique of sulfation roasting. In this process, concentrate is roasted to oxidize the copper to copper sulfate and the iron to iron oxide, and to remove the excess sulfur as sulfur dioxide. Roasting is a batch rather than a continuous operation.

2. Input Materials - This plant will use an ore concentrate that is predominantly chalcopyrite ($CuFeS_2$) (1). It is expected that any sulfide concentrate could be used. The concentrate is blended with Fe_2O_3, which moderates the heat produced by the exothermic oxidation reaction and promotes sulfation of the copper. A ratio of two parts concentrate to one of iron oxide is believed to be about optimum (2).

3. Operating Conditions - Temperatures are kept much lower than in conventional roasting. Instead of 760°C, the range is 400° to 600°C (2,3). Pressures are approximately atmospheric.

4. Utilities - Gas or oil is used to pre-ignite the charge and to maintain temperature.

Noncontact cooling water is used to regulate temperatures of the roaster.

Air or oxygen is injected through the bottom of the charge for oxidation. Twenty percent above theoretical amount of oxygen will be required for the duration of each batch (2).

5. Waste Streams - It is believed that emission of metallic fumes will be considerably less than in a conventionally operated roaster. Particulate emissions following the roaster cyclones have not been estimated.

Organic flotation reagents are expected to be volatilized into the exit gases and oxidized. The gas stream is expected to contain 8 percent SO_2 and 4 percent oxygen (4). Gas temperature should be less than 400°C.

There will be no solid or liquid wastes from this process.

6. Control Technology - A 225 metric ton per day single-contact sulfuric acid plant will remove from 70 to 80 percent of the SO_2 from this process (4,5). This operation will require complete particulate removal, but it is not known what devices will be used.

7. EPA Source Classification Code - 3-03-005-02

8. References -

1. Haver, F.P. and M.M. Wong. Lime Roast-Leach Method for Treating Chalcopyrite Concentrate. U.S. Bureau of Mines, Washington, D.C. 8006. 1975.

2. Foley, R.M. Method of Treating Copper Ore Concentrates. U.S. Patent No. 2,783,141. February 26, 1957.

3. Haskett, P.R., D.J. Bauer, and R.E. Lindstrom. Copper Recovery from Chalcopyrite by a Roast-Leach Procedure.

4. Background Information for New Source Performance Standards: Primary Copper, Zinc, and Lead Smelters. Volume I, Proposed Standards. EPA-450/2-74-002a. U.S. Environmental Protection Agency. Research Triangle Park, North Carolina. October 1974.

5. Potter, J. Personnal Communication on Hydrometallurgical Processes. Bureau of Mines. Salt Lake City, Utah. 1976.

Sponge Iron Plant

1. Function - One company is building a sponge iron plant to accompany its sulfation roasting installation (Process No. 36)(1). After leaching the copper from the calcine produced by sulfation roasting, the leach residue contains mostly iron oxide plus smaller amounts of copper and precious metals. This process will partially reduce the iron, which will then be used for cementation of liquor from the vat leaching of oxidized copper ores. The precipitate from this process is expected to contain the precious metals from the concentrate originally fed into the sulfation roaster (2), and will therefore provide a means of recovery.

The sponge iron will be produced in a kiln by reduction with coal. The iron is not to be high-purity grade, but will be adequate for cementation.

2. Input Materials - The principal input is the residue from vat leaching of sulfation roasted concentrates.

Coal is to be used in the proportion of one ton of coal for each two tons of sponge iron produced.

3. Operating Conditions - Kiln temperatures are expected to be approximately 1100°C (3). Pressures are approximately atmospheric.

4. Utilities - Gas or oil is used to heat the charge until the coal is ignited, and is then used only if required to maintain temperature.

Combustion air is allowed to enter the kiln in carefully regulated amounts. Air quantity is calculated to be 1.5 tons of air per ton of iron produced (3).

5. Waste Streams - No emission data are available, since this process is not yet in operation. Particulates and fumes of volatile metals would be expected in a gas containing appreciable carbon monoxide.

There should be no liquid waste.

The process will generate a solid waste in the form of a slag.

6. Control Technology - It is not yet known what atmospheric control devices will be employed with this process.

The slag is expected to be discarded in a waste dump also used for wastes from ore concentrating operations.

7. EPA Classification Code - None

8. References -

1. Potter, J. Personal communication on Hydrometallurgical Processes. Bureau of Mines. Salt Lake City, Utah, 1976.

2. Hydrometallurgy Makes Advances in Copper Processing. Engineering and Mining Journal. 1973.

3. Encyclopedia of Chemical Technology. Interscience Publishers, a division of John Wiley and Sons, Inc. New York. 1967.

CLEAR Reduction

1. Function - An advanced hydrometallurgical process has been developed with the trade name of CLEAR (Copper Leaching, Extraction, and Refining). The descriptions for Process No's. 38 through 40 outline the three sections of this method.

The first step of the CLEAR system, called a reduction, could also be called a leaching operation. It uses as a solvent a water solution of cupric, ferrous, and sodium chlorides (1). Primarily the cupric chloride is active during this step, reacting with copper ore minerals to form cuprous chloride, additional ferrous chloride, and elemental sulfur. The sulfur is a solid material and remains with the leach residue. Since only about half the copper in the concentrate is solubilized in this first leach, it is treated a second time in the oxidation process (Process No. 40).

Although leaching of fresh concentrate does occur, the principal purpose of this step is to prepare the liquor for electrowinning. It may be reduced with other materials if necessary, then filtered and sent to electrowinning cells (2). These cells are similar to those described in Process No. 35, but are slightly modified for chloride service, operating at a slightly lower temperature, around 55°C. After electrowinning removes part of the copper, the liquor is sent to the Regeneration-Purge step (Process No. 39).

2. Input Materials - A typical Arizona ore concentrate is the primary input. Chalcopyrite is the predominant ore mineral.

The leach liquor at this stage contains about 8 percent cupric chloride, 12 percent ferrous chloride, and 13 percent sodium chloride (1). It is received directly from the oxidation leach of the previous batch (see Process No. 40).

To complete the reduction of the liquor, scrap iron or copper, sodium sulfite, or sulfur dioxide may be added (2).

3. Operating Conditions - The CLEAR process operates at higher temperatures than some other hydrometallurgical processes; 107°C has been reported (1). Pressures are atmospheric.

4. Utilities - Although there are no published reports, the source of heat is probably steam. Electricity is also undoubtedly required for materials handling and pumping.

5. Waste Streams - Some loss of hydrochloric acid vapor from a residual in the leach liquor may occur, but the leaching step is enclosed to minimize this emission. Dust may arise from materials handling.

The process generates no intentional waste streams; with the corrosive solutions, however, accidental losses of liquids are likely.

6. Control Technology - Any losses of hydrochloric acid vapors can be controlled by scrubbing with an alkaline solution.

7. EPA Classification Code - None

8. References -

1. Atwood, G.E., and C.H. Curtis. Hydrometallurgical Process for the Production of Copper. U.S. Patent No. 3,785,944. January 15, 1974.

2. Rosenzweig, M.D. Copper Makers Look to Sulfide Hydrometallurgy. Chemical Engineering. Volume 83, No. 1: pp. 79-81. January 5, 1976.

CLEAR Regeneration - Purge

1. Function - Exhausted and stripped solvent from the electrowinning cells that follow the reduction process (Process No. 38) is oxidized with air to remove excess iron and to prepare the solution for the pressurized leach operation (Process No. 40). Air is blown through the solution, and ferrous iron is oxidized to ferric chloride and ferric hydroxide. Copper in the solution acts as a catalyst for this oxidation (1). Sulfates are also formed and collect into an insoluble compound similar to the mineral jarosite (2). The jarosite and ferric hydroxide are filtered out and discarded.

2. Input Materials - Liquor from the electrowinning cells is the only input. At this stage, the solution contains about 6 percent cuprous chloride, 8 percent ferrous chloride, and 14 percent sodium chloride (3).

3. Operating Conditions - This is a pressurized process, operating at 107°C and 2.7 kilograms per square centimeter (3).

4. Utilities - Source of heat has not been reported. Either steam or direct firing could be applicable.

Compressed air is required, and process water is added at this step to compensate for evaporation and losses. Quantities are unknown.

5. Waste Streams - Although no data have been reported, a gaseous stream must be released from this step carrying hydrochloric acid vapor and steam.

Solids removed by filtration are discarded. Composition is reported to be primarily an iron sulfate/hydroxide mixture (3). Other elements leached from the concentrate will be present. The quantity of solids produced is about 2 to 4 percent of the total weight of spent electrolyte (3). Liquids will probably drain to waste from the solids.

6. Control Technology - The gas stream from this oxidation operation is undoubtedly processed to recover the vaporized and entrained materials. This is probably accomplished by external cooling, condensation, and water scrubbing. No details have been disclosed.

The solid wastes from this process are mixed with the wastes from the oxidation step (Process No. 40) and sluiced into a settling pond. In locations other than the arid region where this plant is operating, secondary water pollution could be substantial.

7. EPA Classification Code - None

8. References -

1. Potter, J. Personnal Communication on Hydrometallurical Process. Bureau of Mines. Salt Lake City, Utah, 1976.

2. Rosenzweig, M.D. Copper Makers Look to Sulfide Hydrometallurgy. Chemical Engineering. Volume 83, No. 1: pp. 79-81. January 5, 1976.

3. Atwood, G.E., and C.H. Curtis. Hydrometallurgical Process for the Production of Copper. U.S. Patent No. 3,785,944. January 15, 1974.

CLEAR Oxidation

1. Function - This is the principal leaching operation of the CLEAR system, in which partially leached ore concentrate is contacted with freshly regenerated leach solution. Primarily the ferric chloride is active during this step, reacting with copper ore minerals to form ferrous chloride, cupric chloride, and elemental sulfur.

The sulfur is a solid material that remains with the leach residue. It is reported that 98 percent of the residual copper is extracted in this step (1). The solids from this process are discarded, although cyanide treatment for gold recovery may be performed if the gold analysis warrants it (see Process No. 2).

The leach solution is filtered and sent to the reduction step (Process No. 38) (2).

2. Input Materials - Solid residue from Process No. 38 and liquor from Process No. 39 are the only input materials. The ratios have not been disclosed. The liquor at this stage contains about 6 percent cupric chloride and 15 percent each of ferric and sodium chlorides (1).

3. Operating Conditions - This is a high-temperature, pressurized leaching operation. Temperatures of 140°C and pressures of 2.7 kilograms per square centimeter are used (3).

4. Utilities - Source of heat has not been reported; either steam or direct firing could be applicable. Electricity is undoubtedly required, but again no information has been published.

5. Waste Streams - Details of the process have not been disclosed in sufficient detail to establish whether emissions of gases to the atmosphere occur. Hydrochloric acid vapors could be generated.

The major waste of the CLEAR system, consisting of the solid residue, is discharged from this step. This residue may be a large fraction of the original concentrate. It is expected to be 99 percent free of copper (1) and much reduced in iron; it must contain considerable colloidal sulfur and soluble chlorides. It may contain cyanides if gold extraction was performed. No analyses have been published.

6. Control Technology - The process will likely incorporate an operating control of hydrochloric acid emission, since even small concentrations of this very corrosive gas can damage plant equipment. If needed, scrubbing with an alkali can further reduce the concentration.

Solid wastes from this process are sluiced into a settling pond. The location of this first application is such that natural evaporation should dispose of the water content, and secondary water pollution should be minimal.

In other locations, however, this waste could cause severe secondary pollution in the form of an acidic seepage high in chlorides, sulfates, and heavy metals.

7. EPA Source Classification Code - None

8. References -

1. Atwood, G.E., and C.H. Curtis. Hydrometallurgical Process for the Production of Copper. U.S. Patent No. 3,785,944. January 15, 1974.

2. Potter, J. Personnal Communication on Hydrometallurgical Process. Bureau of Mines. Salt Lake City, Utah, 1976.

3. Rosenzweig, M.D. Copper Makers Look to Sulfide Hydrometallurgy. Chemical Engineering. Volume 83, No. 1: pp. 79-81. January 5, 1976.

SECTION 3

LEAD INDUSTRY

INDUSTRY DESCRIPTION

While U.S. lead mine production decreased slightly in 1976, output from primary refineries and secondary smelters was higher than in the previous year (1). Consumption increased about 8 percent in 1976 (1). Some areas of consumption have decreased, however. Lead pigments are now rarely used in paints. Although the manufacture of tetraethyl lead for gasoline additives continues as a major market, its use is being restricted. Lead has also been replaced in such applications as joining material for cast iron pipe, and in plumbing and most other construction applications.

Although new methods are being developed for lead production, none has reached commercialization and lead is now being produced by pyrometallurgical processes that have changed little in the last 75 years. Only one major development during that period has been adopted by the industry; updraft sintering machines have replaced almost all the downdraft types.

The best news for some lead-producing companies came in 1965, when the "New Lead Belt" of southeastern Missouri was discovered. Mining of this deposit began in 1967 and it now produces more than 80 percent of the ore that is mined in this country especially for lead. Sections of this deposit produce almost pure galena, analyzed as more than 70 percent lead and containing only very small amounts of other metals.

Three of the six U.S. lead smelters are near this new lead belt in Missouri. The other smelters are in Idaho, Montana, and Texas. The industry employs about 7000 people, of which two-thirds are employed in mining and concentrating operations.

Raw Materials

Lead is most often found in nature as galena (PbS_2), the primary sulfide of lead. Deposits are rarely pure since the lead-bearing compound is usually mixed with pyrite, sphalerite, and pyrrhotite. Most of these deposits contain very little copper.

Oxidized lead ores also occur and are composed primarily of anglesite and cerussite, the weathered products of galena. Table 3-1 lists the important lead ore minerals, together with others in which the lead is combined with phosphorus, vanadium, and other elements.

TABLE 3-1. LEAD MINERALS, BY NAME AND COMPOSITION

Mineral	Composition	
Galena	PbS	88.6
Anglesite	$PbSO_4$	68.3
Cerussite	$PbCO_3$	77.5
Pyromorphite	$Pb_5Cl(PO_4)_3$	76.3
Vanadinite	$Pb_5Cl(VO_4)_3$	73.0
Crocoite	$PbCrO_4$	63.9
Wulfenite	$PbMoO_4$	56.4
Linarite	$PbO \cdot CuO \cdot SO_3\ H_2O$	

Most lead produced in this country is from domestic ores. Little is produced from imported concentrates. General imports of lead represented 15 percent of total consumption in 1976 (2). A considerable quantity is processed first in zinc smelters, the residues then being sent to lead smelters for lead recovery.

Products

Lead bullion, more than 99.9 percent pure, is the primary product of this industry. Antimonial lead, a less ductile product, is also produced. By-products may or may not be produced, depending on the source of the ore and on market conditions. Some smelters are able to produce materials rich in gold, silver, arsenic, cadmium, and bismuth, or to process some of these elements to marketable products. The lead and zinc industries are so interrelated that allocation of by-products by industry is difficult.

Table 3-2 provides the basic 1976 statistics of this industry.

Companies

In 1976 the domestic lead mining industry consisted of approximately 31 mines in 15 states with production valued at $290 million (2). Twenty-five mines accounted for 99 percent of this output and the eight leading mines, all located in Missouri, yielded 80 percent of all ores and concentrates (2). Four companies own and operate the six lead smelters in this country. Each of these companies also operates a zinc smelter; the lead and zinc operations are not located near each other except in Kellogg, Idaho.

Table 3-3 lists the six smelters, with applicable data. Two of the smelters are relatively new plants, and the St. Joe Minerals facility has been extensively remodeled in recent years.

Domestic demand for lead is expected to increase at an annual rate of about 1.5 percent through 1980 (2). Identified domestic resources should be adequate to supply the domestic component of primary lead demand (2).

Environmental Impact

The primary lead industry emits sulfur dioxide to the atmosphere and creates wastewaters containing heavy metals in solution. The slag fuming operations may be a major source of emission of metal fumes to the atmosphere. Two slags produced by these operations may be responsible for the discharge of heavy metals into watercourses.

Unlike the copper industry, most lead smelters are located in areas where rainfall is greater than evaporation. Surface evaporation of wastewaters is therefore not possible, and water pollution from these facilities is a principal concern.

TABLE 3-2. PRINCIPAL STATISTICS FOR THE PRIMARY LEAD INDUSTRY IN THE UNITED STATES IN 1976 (1)

Primary lead produced, thousand metric tons	
Mine (recoverable)	552.98
Refinery (refined lead)	592.32
Refinery (antimonial lead, lead content)	5.45
Exports, thousand metric tons	
Lead materials excluding scrap	5.33
Imports, thousand metric tons	
Ores and concentrates (lead content)	69.28
Refined metal	134.51
Consumption, thousand metric tons	
Reported	1,144.14

TABLE 3-3. U.S. PRIMARY LEAD PRODUCERS (7)

Company	Location	Description	Capacity, metric ton/year
AMAX-Homestake Lead Tollers	Boss, Missouri	Smelter/refinery[a]	127,000
ASARCO, Inc.	East Helena, Montana	Smelter	109,000
	El Paso, Texas	Smelter	109,000
	Glover, Missouri	Smelter/refinery[a]	100,000
	Omaha, Nebraska	Refinery	163,000
The Bunker Hill Company	Kellogg, Idaho	Smelter/refinery	118,000
St. Joe Minerals Corporation	Herculaneum, Missouri	Smelter/refinery[a]	204,000

[a] The smelting and refining of Missouri lead ore is conducted in the same plant.

The sintering process produces most of the sulfur dioxide emissions from lead smelting; lesser amounts are emitted from blast furnaces. None of the lead smelters exercise complete control of these emissions, and a few are without controls for SO_2.

References

1. Mineral Industry Surveys, Lead Industry Monthly. May 1977. U.S. Department of the Interior, Bureau of Mines. Washington, D.C. August 1977.

2. Commodity Data Summaries. 1977. U.S. Department of the Interior, Bureau of Mines. Washington, D.C. 1977.

INDUSTRY ANALYSIS

This industry analysis examines each production process to define its purpose and its environmental effects. Each process is analyzed as follows:

1. Function
2. Input Materials
3. Operating Conditions
4. Utilities
5. Waste Streams
6. Control Technology
7. EPA Classification Code
8. References

This section includes only the processes that are now operating in the United States or that are under construction. Figure 3-1 is a flowsheet showing the processes, their interrelationships, and their major waste streams.

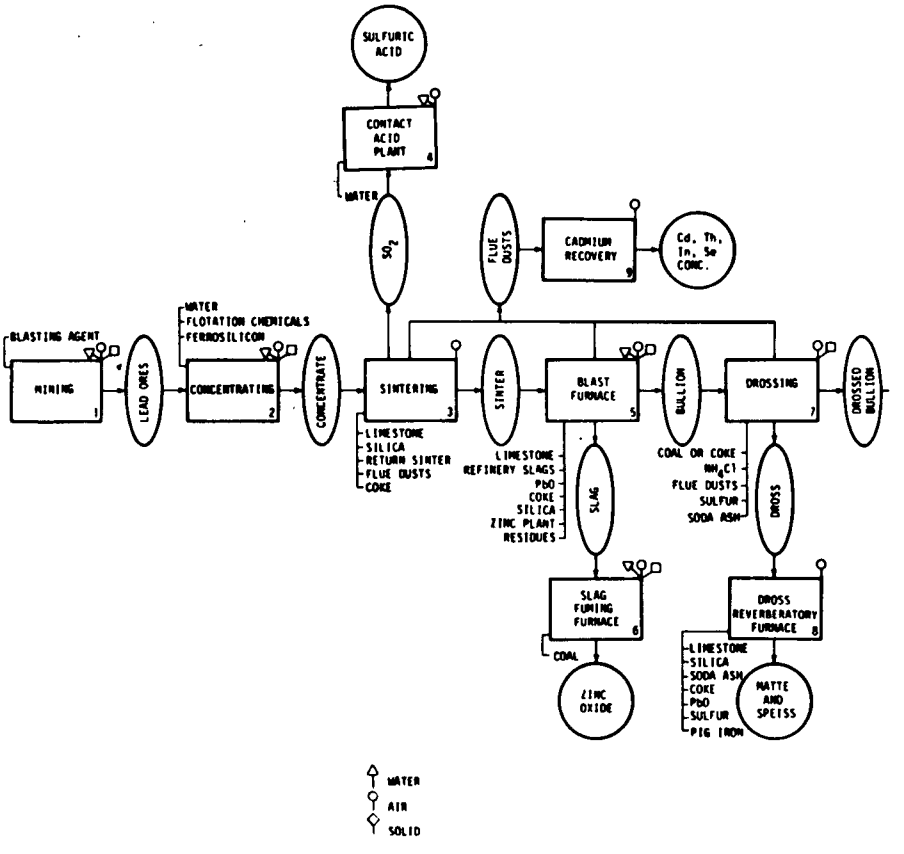

Figure 3-1. Lead industry flow sheet.

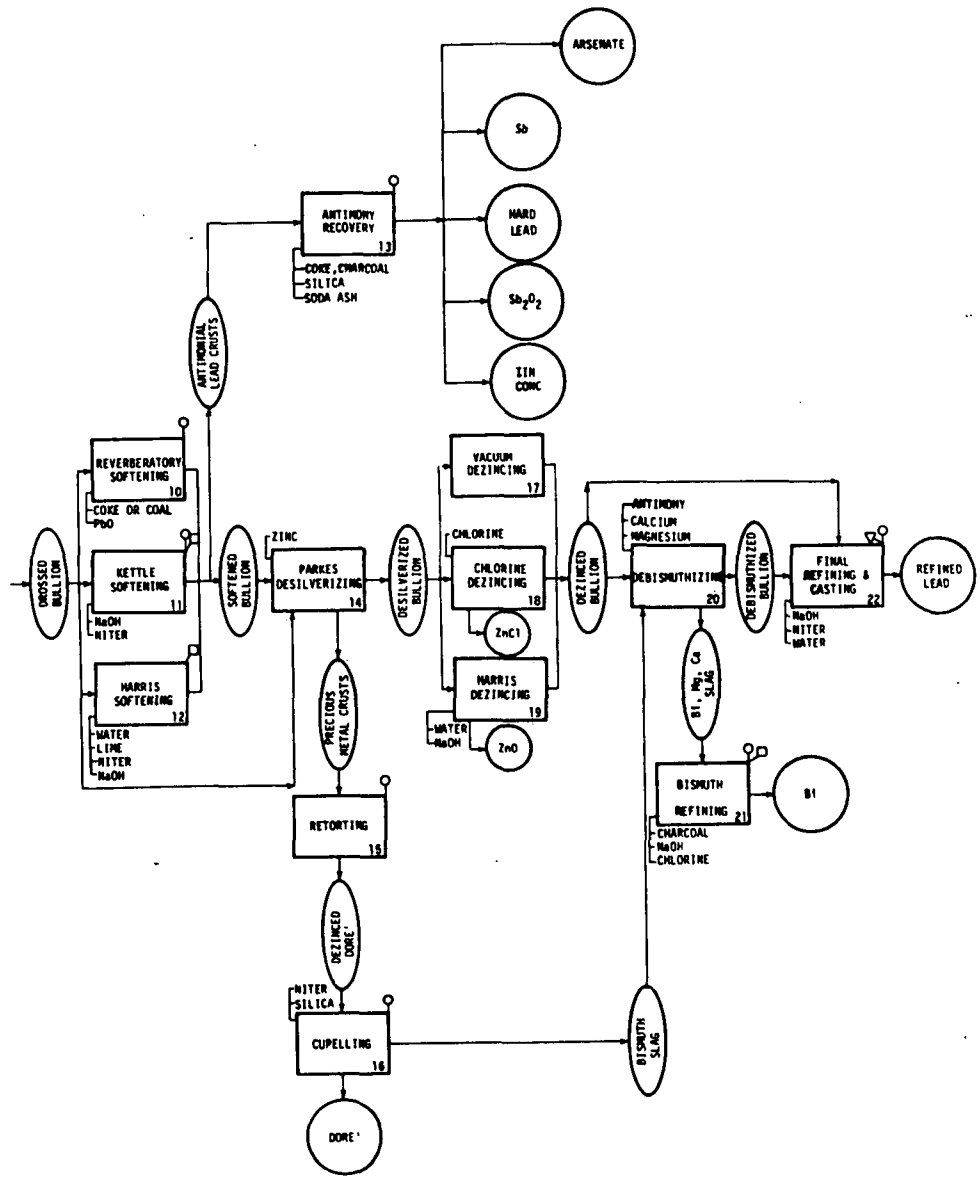

Figure 3-1. Lead industry flow sheet.

Mining

1. Function - Ore deposits containing economically recoverable amounts of lead are excavated and transported to an ore concentration plant. Most lead ore is obtained from underground mines that use normal stoping methods (1,2) such as block caving; room-and-pillar, with and without rock bolting; and cut-and-fill, with timber supports. After the ore is cut from the deposit, it is taken to the surface by rail tram, trackless shuttle cars, or conveyor belts and is then transported to ore concentrating facilities by rail car, truck, belt conveyor, or a combination thereof.

2. Input Materials - The major lead-containing minerals, with composition and lead content, are presented in Table 3-1. The most common are galena (lead sulfide), cerussite (lead carbonate), and anglesite (lead sulfate). Galena ore deposits are the most abundant in nature and are the most frequently used in the United States as a source of lead. The deposits usually contain other elements such as zinc, gold, cadmium, antimony, arsenic, and bismuth. In a few areas, however, such as southeastern Missouri, the ore deposits are characterized by simple mineralization and virtual exclusion of other minerals.

The economically important deposits of lead ore in the United States occur either as cavity fillings or replacements, the origin of which is associated with intrusive igneous masses.

A mixture of ammonium nitrate and fuel oil (AN-FO) is used for blasting operations. Sodium nitrate is added to the mixture to increase blasting power (3).

3. Operating Conditions - Mining is performed under ambient conditions.

4. Utilities - Electricity is used for operation of equipment in underground mining and transport. Diesel fuel and electricity are required for ore transport equipment at the surface. Specific energy requirements for the mining equipment are not reported.

A small quantity of water is required for miscellaneous uses such as equipment washing, dust control spraying, and sanitation facilities.

5. Waste Streams - The mining of lead ore generates dust in drilling, blasting, loading, and transport operations. Estimated average fugitive dust emission is 110 grams per metric ton of ore, based upon observations from several types of nonferrous mining.

Wastewater from lead mining results from several sources, the worst of which is probably seepage of surface water through spoil piles; others include interception of aquifers, and water sent into the mine for utility purposes (5,6). The water is pumped from the mine at a rate necessary to maintain mining operations. The required pumping rate bears no relation to

the ore output and is subject to seasonal variation. The rate can range from a few cubic meters to thousands of cubic meters per day.

Along with small amounts of oil and hydraulic fluid resulting from spills or leaks, the wastewater contains dissolved and suspended solids that reflect the composition of the ore being mined. Analysis of wastewater from a Missouri and an Idaho mine are given in Tables 3-4 and 3-5. In general, chemical characteristics of the water are typical of those from any sulfide mine in the same geographic area. These characteristics are described in Section 6.

Substantial amounts of solid waste result from underground mining operations, the estimated average for 1973 being 0.13 ton per ton of ore mined (4). This waste material consists of the country-rock surrounding the ore body plus low-grade lead ore contained in it. The normal method of disposal is to pile this spoil in a location near the mouth of the mine.

6. Control Technology - Fugitive dust emissions are controlled by the manual use of water sprays as needed.

Wastewater is generally treated with lime and impounded as practiced in copper mining. Management of wastewater is discussed in detail in Section 6. Since water from Missouri mines is already basic, liming may not be required for pH adjustment. Water from western lead mines is acidic and is treated similarly to that from copper mines. After treatment, the wastewater is reused in ore milling operations.

The solid waste or spoil generated by the mining operation is often used as support and landfill material for highway construction. When it cannot be so used, it is placed in a spoils dump located so that it should not contaminate a stream or underground aquifer. Prevention of water seepage is important in this regard.

7. EPA Source Classification Code - None

8. References -

1. Mineral Facts and Problems. U.S. Department of the Interior, Bureau of Mines. Washington, D.C. 1970.

2. Minerals Yearbook. U.S. Department of the Interior, Bureau of Mines. Washington, D.C. 1973.

3. Encyclopedia of Chemical Technology. Interscience Publishers, a division of John Wiley and Sons, Inc. New York. 1967.

4. Development Document for Interim Final and Proposed Effluent Limitations Guidelines and New Source Performance Standards for the Ore Mining and Dressing Industry. Point Source Category Volumes I and II. Environmental Protection Agency. Washington, D.C. EPA-1-75/032-6. February 1975.

5. Hawley, J.R. The Problem of Acid Mine Drainage in the Provence of Ontario. Ontario Ministry of the Environment. Toronto. 1977.

6. Williams, R.E. Waste Production and Disposal in Mining, Milling, and Metallurgical Industries. Miller Freeman Publications, Inc. San Francisco. 1975.

7. Wixon, B.G., et al. An Interdisciplinary Investigation of Environmental Pollution by Lead and Other Heavy Metals from Industrial Development in the New Lead Belt of Southeastern Missouri. University of Missouri, Rolla and Columbia, Missouri. June 1974.

8. Hallowell, J.B., et al. Water Pollution Control in the Primary Nonferrous Metals Industry - Volume I. Copper, Zinc, and Lead Industries. Environmental Protection Agency. Washington, D.C. EPA-R2-73-274a.

TABLE 3-4. ANALYSIS OF A MISSOURI MINE WATER (7,8)

Component	Concentrate, mg/l
Mercury	0.001 to 0.002
Cadmium	<0.002 to 0.058
Chromium	<0.010 to 0.17
Manganese	<0.02 to 57.2
Iron	<0.02 to 2.5
Sulfate	63.5 to 750
Chloride	<0.01 to 57
Fluoride	0.063 to 1.2

TABLE 3-5. ANALYSIS OF AN IDAHO MINE WATER (6)

Constituent	Concentration	Constituent	Concentration
pH	2.2	Magnesium	1,500.0
Sulfate as $SO_4^{=}$	63,000.0	Calcium	31.6
Total iron	16,250.0	Potassium	0.7
Zinc	14,560.0	Sodium	0.5
Nickel	4.8	Chromium	0.3
Copper	13.4	Chloride	38.0
Manganese	2,625.0	Nitrate as NO_3^{-}	77.5
Aluminum	347.0	Electrical conductivity (micromhos @ 25°C)	48,000.0
Lead	0.8		
Cadmium	22.5		

Concentrating

1. Function - Concentrating is the process whereby the lead-containing portions of the ore produced by the mine are isolated from the fractions low in desirable mineral content. Except for high-grade galena ore produced in southeastern Missouri, ore concentration is required to produce feed material suitable for subsequent metal recovery processes. The process consists of milling the ore by crushing and grinding, followed by separation into two or more fractions. The fractions rich in desired minerals are called concentrates, and the fractions low in mineral content are called gangue.

Separation is achieved by gravity and froth flotation methods. The gravity method achieves separation because of differences in specific gravity of the lead-rich minerals and the gangue particles. The flotation method achieves separation by the use of compressed air and chemical additives that create a froth in which finely divided mineral particles are floated from the gangue. In some applications, the flotation method serves as a supplement to gravity separation to improve the concentrate.

Lead producers of the Mississippi Valley and the eastern United States use gravity separation because there are considerable differences in specific gravities of the ore minerals and the gangue. Since the milled ore particles need not be as small as those required for flotation, the milling costs are lower. Two modes of gravity separation are commonly used, jigging and float-sink. In jigging, the crushed ore particles are fed to an agitated, water-filled jigging chamber where the heavier ore particles gravitate to the bottom and the lighter gangue is displaced to the top and removed. The float-sink mode utilizes a liquid medium, such as an aqueous ferrosilicon suspension, with a specific gravity between that of the lead mineral and the gangue. The mineral particles sink, while the gangue floats to the top for removal by skimming.

Flotation is practiced chiefly by lead mines in the western United States. The method is described in detail under Process 2 of copper production. The concentrate recovered from the flotation cells contains 45 to 78 percent lead, the percentage depending on the type and grade of crude ore and its susceptibility to flotation. The concentrate also contains varying amounts of other valuable elements.

Ore concentrate from the flotation cells requires dewatering before shipment to smelters. The slurry is fed to thickeners, and flocculating agents such as alum are added to improve the settling rate and fines collection. The thickened slurry of about 50 percent solids is vacuum filtered and dried to a product containing 6 to 15 percent moisture (1).

Typical analyses of southeastern Missouri and western lead ore concentrates are presented in Tables 3-6 and 3-7, respectively.

TABLE 3-6. TYPICAL SOUTHEASTERN MISSOURI LEAD CONCENTRATE ANALYSES (1)
(percent by weight)

Ag	Pb	Cu	Zn	Fe	Ni	Co	S	As	Insol	CaO	MgO
44.2	74.8	0.64	1.05	2.08	0.10	0.06	15.1	0.009	1.1	1.34	0.90
43.5	76.1	0.85	1.29	1.04	0.2	0.08	15.4	0.006	1.3	0.94	0.75

TABLE 3-7. WESTERN LEAD CONCENTRATE ANALYSES (4)

Constituent	Percent	Constituent	Percent, weight[a]
Pb	45-60	Sb	0.01-2.0
Zn	0-15	Fe	1.0-8.0
Au	0-0.05 kg/ton	insolubles	0.5-4.0
Ag	0-1.4 kg/ton	CaO	tr-3.0
Cu	0-3	S	10-30
As	0.01-0.40	Bi	tr-0.1

[a] tr = trace.

2. Input Materials - Lead content of the sulfide ores fed to concentrating plants ranges from 3 to 8 percent, except for the high-grade Missouri ores in which lead content exceeds 70 percent (2).

Table 3-8 lists the flotation chemicals and amounts required for processing lead ore; included also are some of the less commonly used agents.

3. Operating Conditions - All concentrating operations take place at atmospheric pressure and ambient temperatures.

4. Utilities - Water usage varies with the degree of processing and is approximately 4 cubic meters per metric ton of ore processed (3).

Electricity is used to operate grinding equipment and generate compressed air.

5. Waste Streams - Fugitive dust emissions are the only type of atmospheric pollutant warranting consideration. Compositions of the dust are not specified. Crushing operations generate, on the average, 3.2 kilograms of particulate emissions per metric ton of ore processed; 0.9 kilogram is attributable to the crushing and grinding operations and 2.3 kilograms to material transport and storage (3,4,5).

Liquid waste from the concentrating operation is in the form of a tailings slurry discharged to the tailings pond. Approximately 4 cubic meters of tailings slurry is discharged per metric ton of ore processed (3,6).

Flotation and conditioning chemicals are present in the wastewater either as a floating layer or a solute. In general, lead sulfide flotation is run at an elevated pH level (8.5 to 11) requiring frequent pH adjustments with hydrated lime or sodium carbonate (7). This alkaline wastewater dissolves only small amounts of heavy metals, but can carry mineral particles in suspension.

Wastewaters leaving a concentrating operation contained metals as shown in Table 3-9. These were the only metals investigated; others may have been present in greater than normal concentrations. Concentrations of calcium, magnesium, sodium, and potassium in mill waters are significantly higher than those in surface water.

Water content of the gangue material from flotation is adjusted to facilitate hydraulic transport to a tailings pond. Tailings contain residual solids from the ore, dissolved solids, and excess mill reagents. Typical quantities are 0.9 to 1.1 tons per ton of ore milled. The main component is dolomite, with small quantities of such constituents as lead, zinc, copper, mercury, cadmium, manganese, chromium, and iron.

6. Control Technology - Control methods used by copper producers in concentrating plants are also used at lead concentrators. Details are given in Process No. 2 of Section 2, and in Section 6.

TABLE 3-8. FLOTATION CHEMICALS (8)

Chemical	Amount used, kg/metric ton of ore
Na_2CO_3 (conditioner)	0.45 - 0.9
CaO (conditioner)	0.9 - 18.
$CuSO_4$ (activator)	0.36 - 0.55
Sodium isopropol xanthate (collector)	0.0045 - 0.09
Pine oil (frothers)	0.09
NaCN (depressant)	0.045 - 0.14

LESS COMMON FLOTATION REAGENTS

Reagent	Purpose
Methyl isobutyl-carbinol	Frother
Propylene glycol methyl ether	Frother
Long-chain aliphatic alcohols	Frother
Potassium amyl xanthate	Collector
Dixanthogen	Collector
Isopropyl ethyl thionocarbonate	Collectors
Sodium diethyl-dithiophosphate	Collectors
Zinc sulfate	Zinc depressant
Sodium dichromate	Lead depressant
Sulfur dioxide	Lead depressant
Starch	Lead depressant

TABLE 3-9. LEAD MILL WASTEWATER ANALYSIS (6)

Component	Concentration, mg/l
Mercury	<0.001
Lead	0.107 to 1.9
Zinc	0.12 to 0.46
Copper	0.014 to 0.36
Cadmium	0.005 to 0.011
Chromium	0.002 to 0.02
Manganese	0.03 to 0.169
Iron	0.03 to 0.53

To preserve the Ozark area of Missouri where the New Lead Belt is located, special attention has been given to wastewater treatment. Flotation reagents in the wastewater are biologically degraded by algae growth. Use of meandering streams before final discharge to receiving waters increases exposure to the algae and provides good conditions for algae growth. The algae sink to the bottom of the stream and act as a solids collector, as well (6). Disposal of algae in event of excessive growth is not discussed in the literature.

7. EPA Source Classification Code - 3-03-010-04

8. References -

1. Development Document for Interim Final Effluent Limitations Guidelines and Proposed New Source Performance Standards for the Lead Segment of the Nonferrous Metals Manufacturing Point Source Category. Environmental Protection Agency. EPA-440/1-75/032-a. February 1975.

2. Mineral Facts and Problems. U.S. Department of the Interior, Bureau of Mines. Washington, D.C. 1970.

3. Development Document for Interim Final and Proposed Effluent Limitations Guidelines and New Source Performance Standards for the Ore Mining and Dressing Industry. Point Source Category Volumes I and II. Environmental Protection Agency. Washington, D.C. EPA-1-75/032-6. February 1975.

4. PEDCo-Environmental Specialists, Inc. Trace Pollutant Emissions from the Processing of Metallic Ores. August 1974.

5. Jones, H.R. Pollution Control in the Nonferrous Metals Industry. Noyes Data Corporation. Park Ridge, New Jersey. 1972.

6. Wixon, B.G., et al. An Interdisciplinary Investigation of Environmental Pollution by Lead and Other Heavy Metals from Industrial Development in the New Lead Belt of Southeastern Missouri. University of Missouri. Rolla and Columbia, Missouri. June 1974.

7. Hawley, J.R. The Use, Characteristics and Toxicity of Mine-Mill Reagents in the Provence of Ontario. Ontario Ministry of the Environment. Toronto. 1977.

8. Encyclopedia of Chemical Technology. Interscience Publishers, a division of John Wiley and Sons, Inc. New York. 1967.

Sintering

1. Function - The ore concentrate is treated by a sintering process to make it suitable for subsequent blast furnace operation. Sintering is the roasting of blended and pelletized ore concentrate mixtures. The purposes of sintering are as follows:

1) To provide a feed of proper ratio of lead, silica, sulfur, and iron for smelting;

2) To convert metallic oxides into oxides or sulfates amenable to smelting;

3) To drive off volatile oxides such as SO_2, SO_3, As_2O_3, and Sb_2O_3; and

4) To produce a firm, porous clinker that is easily fed to a blast furnace (1).

The process consists of three consecutive steps:

1) Blending of ore concentrates with direct-smelting ores, sinter recycle, flue dust, and fluxes;

2) Pelletization of the blended mixture; and

3) Roasting of pelleted material.

Blending balances the smelter charge and permits control of impurity levels of zinc, copper, arsenic, antimony, and bismuth. Pelleting is achieved by mixing the blended charge with 6 to 8 percent by weight water in a pug mill and feeding the mix to a rotating pelletizing drum. Resulting pellets are 3 to 5 millimeters in diameter.

The pellets are spread evenly over a horizontal metal belt which takes them through either an updraft or downdraft sintering machine. The two varieties of sintering machines differ primarily in their combustion air methods of circulating. As the pellets proceed through the sintering machine, they are heated and undergo oxidizing reactions that convert sulfides to oxides and sulfates. Lead silicate forms, and oxides combine to form low-melting-point silicate complexes, which bind the ore particles together.

The resulting sinter is broken into pieces ranging up to 25 millimeters diameter (2). The crushed sinter is screened for removal of fines, which are recycled to the charge blending step. The screened product is stored for blast furnace reduction. Table 3-10 gives typical ranges of components in the sintered product.

TABLE 3-10. SINTER ANALYSIS (1,3,4)

Component	Weight, percent
Ag	0.03-0.07
Cu	0.3-4.5
Pb	28-50.0
S	0.75-2.0
Fe	12-15.5
SiO_2	10.0-15.6
CaO	9.0-10.5
Zn	4.0-12.5
Sb	0.01-1.5
Cd	Tr-0.04

2. Input Material - Lead concentrates are the main input material for sintering. Typical analyses of western and Missouri lead concentrates are presented in the concentrating process description (Process No. 2). Collected flue dusts, recycled sinter, and smelter residues also are part of the charge for sintering. Sulfide-free fluxes are added to maintain a specified sulfur content (5 to 7 percent by weight) in the charge. Silica and limestone are used as needed. Coke fines, in the amount of 1 percent by weight of the total charge, are mixed with the charge (5).

Typical feed to a sinter machine is given in Table 3-11.

TABLE 3-11. SINTER MACHINE FEED (10)

	Weight, percent
Ore concentrate	31.47
Misc. lead materials	12.44
Flux diluent	19.86
Sinter recycle	36.20

3. Operating Conditions - Temperatures in both updraft and downdraft sinter roasting machines reach approximately 600°C. Pressure is atmospheric.

4. Utilities - In both updraft and downdraft sintering machines gas- or oil-fired burners are used to ignite the charge. Energy consumed in the sintering process amounts to 0.5 million kilocalories per ton of lead produced. A breakdown allocates 40 percent to coke consumption and 60 percent to gas or oil consumption, gas being used more than oil (6).

Water may be added for pelletizing the charge if the moisture content is below required limits. Air is injected through the charge while oxidizing in the sintering machines. No quantities are given for air injection.

Electricity is the power source for fans, feed conveyors and general operating equipment. Approximately 20 percent less power is required for the updraft fans than for downdraft (7).

5. Waste Stream - Particulate emissions are approximately 100 to 250 kilograms per metric ton of lead produced in sinter machines (9). Analysis of the flue dust shows roughly 40 to 70 percent lead, 10 to 20 percent zinc, and 8 to 12 percent sulfur (8). Depending upon concentrate composition, the flue dust contains various amounts of antimony, cadmium, germanium, selenium, tellurium, indium, thallium, chlorine, fluorine, and arsenic (7). Tables 3-12 and 3-13 give weight analysis and size distribution of particulate emissions.

TABLE 3-12. GRAIN LOADING AND WEIGHT ANALYSIS OF INPUT FEED AND EMISSIONS UPDRAFT LEAD SINTERING MACHINE (11)

Grain loading, g/Nm^3 (0°C)	Weight analysis, %	
16.3	Pb	35-50
	SiO_2	8-11
	Fe	9-13
	CaO	7-10
	MgO	0.7-1
	Zn	4-6
	S	0.7-1
	Cu	tr
	As	tr-30
	Cd	tr
	Se	tr
	inerts	6-8

TABLE 3-13. TYPICAL SIZE PROFILE OF EMISSIONS, UPDRAFT LEAD SINTERING MACHINE (11)

Size, micron	% weight
20-40	15-45
10-20	9-30
5-10	4-19
< 5	1-10

Sintering is the only step in the lead smelting process that emits enough SO_2 to create a serious air pollution control problem. About 85 percent of the sulfur is removed from the concentrate during sintering. Approximately 50 percent of the remainder is discharged as SO_2 from subsequent operations; the balance goes into the slag as sulfates (7,9).

In the sintering process most of the sulfur is eliminated at the front end of the conveyor. By the time the charge reaches the end of the machine, little SO_2 is being emitted. If the exit gases are removed in a single stream, the SO_2 concentration is about 2 percent (7,8). The exit gases can be split into two streams, one predominantly from the front and the other from the rear. This procedure produces both a weak and a strong SO_2 stream, 0.5 and 5.7 percent SO_2 respectively (7). Only updraft sintering machines have incorporated this engineering modification.

Off-gases also contain organic vapors from flotation reagents or their combustion products. The compounds formed from these flotation chemicals by reactions caused by the sintering temperatures are not known. Traces of HF and SiF_4 may be found in these gases. The volume of gases emitted is a function of machine size and material throughput and ranges from 0.25 to 0.50 normal cubic meters per minute per square meter of bed area (8). Temperatures of the gases normally range from 150 to 400°C (5,8). Flow rates may vary between 58,000 and 66,000 standard cubic meters per hour (8).

Table 3-14 gives a typical analysis of gases from a sintering machine. A small amount of arsenic trioxide in the gaseous form is included in these exit gases; quantities are unknown.

6. Control Technology - The particulate control devices discussed in Section 2, Process No's. 3 and 6, are also used for treating sintering process exhaust gases. Particulates from the sinter machine are collected by several different methods. Four of the six plants use baghouses, and the other two use an ESP. Efficiencies range from 95 to 99.8 percent. Table 3-15 lists current atmospheric controls on lead sintering processes.

The strong gas stream collected from separation of updraft exit gases is the only stream amenable to sulfuric acid production. In both the weak stream and the combined single stream, concentrations are too low for such treatment. At least one smelter has installed a recirculation system for the weak stream which allows SO_2 to be removed in the strong stream exit for subsequent treatment. Certain foreign operations have successfully made use of this technique for some time. A detailed discussion of sulfuric acid production is presented in Section 2, Process No. 14.

Three plants are now controlling SO_2 in sinter machine off-gases by use of single-contact sulfuric acid plants, which reduce total SO_2 emissions by 70 to 80 percent.

TABLE 3-14. ANALYSIS OF SINTER MACHINE EXHAUST GASES (MISSOURI LEAD OPERATING COMPANY) (12)

	Range, % by volume
SO_2	4-7
O_2	4-9
CO_2	3-4
N_2	84-85
SO_3	0.05-0.2
Dust content	57 g/Nm^3
Temperature	200-350°C
Moisture content	25 percent by vol.

TABLE 3-15. ATMOSPHERIC CONTROL SYSTEMS ON PRIMARY LEAD SINTERING MACHINES (7)

Plant	Control system
Bunker Hill/Kellogg, Idaho	Updraft sintering machine produces two gas streams: strong gas stream to acid plant. Weak gas stream joined with blast furnace and hygiene air, then goes to a baghouse and out the stack.
AMAX/Boss, Missouri	Updraft sintering machine produces two gas streams: strong gas stream to acid plant. Weak gas stream jointed with blast furnace before exiting out 200 ft stack.
St. Joe/Herculaneum, Missouri	Updraft sintering machine produces two gas streams: strong gas stream to acid plant. Weak gas stream joins other gases, then thru baghouses and to stack.
ASARCO/E. Helena, Montana	Updraft sintering machine. Gases to water spray, ESP, then dilution air added and released to stack.
ASARCO/Glover, Missouri	Updraft sintering machine. All gases to water spray and baghouse, then out stack.
ASARCO/El Paso, Texas	Downdraft sintering machines. Gases treated by scrubbers, a spray chamber, and a baghouse, then out stack.

Currently no lead smelters practice control on weak SO_2 streams. The best available control technology for these streams would be chemical scrubbing, as described in Section 2, Process No. 6.

7. EPA Classification Code - 3-03-010-01.

8. References -

1. Development Document for Interim Final Effluent Limitations Guidelines and Proposed New Source Performance Standards for the Lead Segment of the Nonferrous Metals Manufacturing Point Source Category. Environmental Protection Agency. EPA-440/1-75/032-a. February 1975.

2. Davis, W.E. National Inventory of Sources and Emissions: Copper, Selenium, and Zinc. U.S. Environmental Protection Agency (NTIS), Research Triangle Park, North Carolina. PB-210 679, PB-210 678, and PB-210 677. May 1972.

3. Encyclopedia of Chemical Technology. Interscience Publishers, a division of John Wiley and Sons, Inc. New York. 1967.

4. Hallowell, J.B., R.H. Cherry, Jr., and G.R. Smithson, Jr. Trace Metals in Effluents from Metallurgical Operations. In: Cycling and Control of Metals. U.S. Environmental Protection Agency. Cincinnati, Ohio. November 1972. pp. 75-81.

5. Fejer, M.E., and D.H. Larson. Study of Industrial Uses of Energy Relative to Environmental Effects. U.S. Environmental Protection Agency. Research Triangle Park, North Carolina. July 1974.

6. Copper Hydrometallurgy: The Third-Generation Plants. Engineering and Mining Journal. June 1975.

7. Background Information for New Source Performance Standards: Primary Copper, Zinc, and Lead Smelters. Volume I, Proposed Standards. Environmental Protection Agency. Research Triangle Park, North Carolina. EPA-450/2-74-002a. October 1974.

8. Jones, H.R. Pollution Control in the Nonferrous Metals Industry. Noyes Data Corporation. Park Ridge, New Jersey. 1972.

9. Calspan Corporation. Assessment of Industrial Waste Practices in the Metal Smelting and Refining Industry. Volume II - Primary and Secondary Nonferrous Smelting and Refining. Draft. April 1975.

10. Arthur G. McKee & Co. Systems Study for Control of Emissions Primary Nonferrous Smelting Industry. U.S. Department of Health, Education, and Welfare. June 1969.

11. Duncan, L.J., and E.L. Keitz. Hazardous Particulate Pollution from Typical Operations in the Primary Nonferrous Smelting Industry. Presented at the 67th Annual Meeting of the Air Pollution Control Association. Denver, Colorado. June 9-13, 1974.

12. PEDCo-Environmental Specialists, Inc. Trace Pollutant Emissions from the Processing of Metallic Ores. August 1974.

Acid Plant

1. Function - The sintering machine produces the only lead smelter exit gases that are amenable to production of sulfuric acid. A detailed description of this process is given in Section 2, Process No. 14.

2. Input Materials - Inputs are the same as those discussed in Section 2, Process No. 14.

3. Operating Conditions - Same.

4. Utilities - Same.

5. Waste Streams - Same.

6. Control Technology - The same types of mist eliminators are used in lead contact acid plants as in copper acid plants. Particulate scrubbers are part of the input gas cleaning system.

Liquid waste effluents are treated with lime and by settling in cooling ponds. Overflows are recycled to slag granulation or discharged (1). Tables 3-16 and 3-17 give the treatments now practiced for control of acid plant blowdown and scrubber wastewaters, by three primary lead smelters having acid plants.

7. EPA Source Classification Code - None

8. References -

1. Development Document for Interim Final Effluent Limitations Guidelines and Proposed New Source Performance Standards for the Lead Segment of the Nonferrous Metals Manufacturing Point Source Category. Environmental Protection Agency. EPA-440/1-75/032-a. February 1975.

TABLE 3-16. WASTEWATER TREATMENT AT PRIMARY LEAD ACID PLANTS (1)

Plant	Liquid effluent treatment	Discharge
1	Enters water treatment plant, limed, thickened, and filtered, and sent to reservoir for recycle.	0
2	Recycled to slag granulation.	0
3	Enters liming sump, then passed to lime bed, then to a cooling pond.	273 m^3/day (72,000 GPD)

TABLE 3-17. SCRUBBER WASTEWATER TREATMENT AT PRIMARY LEAD PLANTS (1)

Plant	Treatment	Discharge
1	Enters water treatment plant, limed, thickened, filtered, and then sent to reservoir for recycling.	0
2	Recycled from a cooling tower.	0
3	Sent to a lime sump then to a settling pit. Most is recycled.	Undetermined

Blast Furnace

1. Function - Sintered feed is reduced in the blast furnace to produce a crude lead bullion. Specified amounts of coke, limestone, and other fluxing materials are charged with the sinter through a water-jacketed shaft at the top of the furnace. The material settles to the furnace bottom, which is supported by a heavy refractory material.

Air is injected into the charge through side-mounted tuyeres to effect a more complete formation of metallic oxides and thereby raise the temperature of the charge. At the operating temperature of the furnace, coke and resulting carbon monoxide reduce most of the metallic oxides to yield a molten mass of metal. Some of the metallic impurities interact with the flux to form a slag composed mainly of iron and calcium silicates. Depending upon the composition of the charge, material in the blast furnace can separate into as many as four distinct liquid layers.

Copper, if present in lead ores, reacts with residual sulfur to form a matte that separates into a layer beneath the slag. The matte typically assays 44 to 62 weight percent copper, 10 to 20 percent lead, and up to 13 percent sulfur (1). If the charge is high in arsenic and/or antimony content, a speiss layer will form under the matte. Speiss compounds are arsenides and antimonides of iron and other metals. The bottom layer of lead bullion is 94 to 98 weight percent lead plus varying amounts of other metals such as copper, tin, arsenic, antimony, silver, and gold. Typical ranges of composition are shown in Table 3-18.

Upon completion of the process, the crude bullion is charged to drossing kettles (2), the matte and speiss are sold to a copper smelter, and the slag is discharged to a fuming furnace. A typical slag analysis is shown in Table 3-19.

The capacity of most large blast furnaces is 1360 metric tons of charge materials per day.

2. Input Materials - The blast furnace charge is made up of sinter, fluxes, coke, and sundry materials recycled from other smelting operations. The relative amounts of these materials are presented in Table 3-20.

Normally, coke comprises 8 to 15 weight percent of the furnace charge. If the blast air is enriched with oxygen, coke consumption is reduced 10 percent with a 10 to 20 percent increase in smelting rate.

3. Operating Conditions - Temperatures in a blast furnace range from 215°C for the charge near the top of the furnace to 1220°C in the slag zone. Slag temperatures range from 1000° to 1220°C and bullion temperatures from 900° to 950° C.

Because of the exhaust gas configuration, the blast furnace operates at a pressure slightly above atmospheric.

TABLE 3-18. LEAD BULLION COMPOSITION (2,3,4)

Component	Wt. percent
Ag	0.13-0.31
Au	1.6-3.1[a]
Cu	1.0-2.5
S	0.25
Pb	94-98
Fe	0.6-0.8
Zn	tr.
Sn	tr.
As	0.7-1.1
Sb	1.0-1.75
Bi	0.01-0.03

[a] Value for Au in g/metric ton.

tr. - trace

TABLE 3-19. TYPICAL BLAST FURNACE SLAG ANALYSIS (2,3,4)

Component	Weight percent
Ag	1.56-4.69[a]
Cu	0.10[b]
Pb	1.5-3.5
FeO	25.5-31.9
CaO	14.3-17.5
Zn	13.0-17.5
insol	22.6-26.5[d]
MnO	2.0-4.5
As	0.10
Sb	0.10
Cd	0.10
F	tr[c]
Cl	tr[c]
Ge	tr[c]
S	0.5-1.0

[a] Values for Ag in grams per metric ton.

[b] Variable, depending on the furnace charge.

[c] tr = trace.

[d] Insolubles include MgO - AlO - SiO_2 phases.

TABLE 3-20. TYPICAL BLAST FURNACE CHARGE (2)

Component	Weight, kg
Sinter	1250-1650
Coke	125-165
Miscellaneous products (zinc plant residues)	0-90
Slag (dross)	0-225
Silica	0-36
Limerock	0-27
Cadmium residue	0-9
Refinery dross	0-35
Baghouse product	0-35

4. Utilities - Air is injected into the charge at a pressure of 0.1 to 0.3 kilogram per square centimeter (2). Consumption of 140 to 175 cubic meters per hour is required for a charge of 1360 metric tons per day (2).

Cooling water circulates through jacketed shafts to control furnace temperatures. Quantities are unreported.

5. Waste Streams - Particulate emission rates in blast furnace exhaust gas range from 125 to 180 kilograms per metric ton of bullion produced (3,5). Particle sizes of the dust range from 0.03 to 0.3 micron (5). The dust is composed of oxides, sulfates, and sulfides of the various metals present in the furnace charge, plus chlorides, fluorides, and coke dust (5,6).

Undiluted gas temperatures are estimated to be 650° to 750°C (3,5), with theoretical flue gas rates of 170 to 400 normal cubic meters per minute. After dilution by air and water vapor, however, volume typically increases from 9 to 12 times the theoretical flow (1).

Exhaust gas analysis after air dilution and CO combustion is reported in Table 3-21.

TABLE 3-21. EXHAUST GAS ANALYSIS AFTER AIR DILUTION AND CO COMBUSTION (5,7)

Component	Percent by volume
CO_2	15
O_2	15
CO[a]	5
SO_2	0.05
N_2	Remainder

[a] CO concentration estimated to be 25 to 50 volume percent prior to combustion.

Other reports indicate that CO and SO_2 concentrations, although highly variable, average 2.0 and 0.01 to 0.25 volume percent, respectively (1,5). An estimated 10 to 20 weight percent of total sulfur in the feed concentrate is removed in the blast furnace, half emitted as SO_2 and the rest retained in the slag or matte (8).

Slag from the blast furnace can be discharged and granulated with cooling water, eliminating the need for a slag fuming furnace.

6. Control Technology - The dilute SO_2 emissions from the blast furnace are not controlled at lead smelters. The best available control technology is chemical scrubbing.

Particulates in blast furnace exhaust gases are controlled at all smelters by means of baghouses. Control efficiency ranges from 95 to 99.9 percent. Table 3-22 describes controls for blast furnace gases. See Section 2, Process No. 6 for details.

Current practice for slag disposal is to convey it hydraulically with the granulating water stream to a dump or tailings pond. Recommended technology includes use of concrete settling pits, ground sealing of disposal area, and diversion of runoff to a water treatment lagoon.

7. EPA Classification Code - 3-03-010-02

8. References -

1. Arthur G. McKee & Co. Systems Study for Control of Emissions Primary Nonferrous Smelting Industry. U.S. Department of Health, Education, and Welfare. June 1969.

2. PEDCo-Environmental Specialists, Inc. Trace Pollutant Emissions from the Processing of Metallic Ores. August 1974.

3. Encyclopedia of Chemical Technology. Interscience Publishers, a division of John Wiley and Sons, Inc. New York. 1967.

4. Development Document for Interim Final Effluent Limitations Guidelines and Proposed New Source Performance Standards for the Lead Segment of the Nonferrous Metals Manufacturing Point Source Category. Environmental Protection Agency. EPA-440/1-75/032-a. February 1975.

5. Jones, H.R. Pollution Control in the Nonferrous Metals Industry. Noyes Data Corporation. Park Ridge, New Jersey. 1972.

6. Phillips, A.J. The World's Most Complex Metallurgy (Copper, Lead, and Zinc). Transactions of the Metallurgical Society of AIME. Volume 224. August 1962. pp. 657-668.

7. Arthur G. McKee & Co. Systems Study for Control of Emissions Primary Nonferrous Smelting Industry. U.S. Department of Health, Education, and Welfare. June 1969.

8. Background Information for New Source Performance Standards: Primary Copper, Zinc, and Lead Smelters. Volume I, Proposed Standards. Environmental Protection Agency, Research Triangle Park, North Carolina. EPA-450/2-74-002a. October 1974.

TABLE 3-22. ATMOSPHERIC CONTROL SYSTEMS ON PRIMARY LEAD BLAST FURNACES (7)

Plant	Control system
Bunker Hill/Kellogg, Idaho	Blast furnace gas stream joined to weak sinter gas stream and hygiene air, then to baghouse then to stack.
AMAX/Boss, Missouri	Blast furnace gases join sinter weak gases, then to baghouse, and then out the stack.
St. Joe/Herculaneum, Missouri	Blast furnace gases join sinter weak gases and other gases pass thru baghouses and stack.
ASARCO/E. Helena, Montana	Blast furnace gases join reverb and ventilation gases, then pass thru three baghouses in parallel with stack for each house.
ASARCO/Glover, Missouri	Blast furnace gases to water spray, baghouse, and three stacks.
ASARCO/El Paso, Texas	Blast furnace and dross furnace gases mix, then pass thru a spray chamber and a baghouse, then out six stacks.

Slag Fuming Furnace

1. Function - A slag fuming furnace is used to recover metal values otherwise lost in the slag. Blast furnace slag contains appreciable concentrations of zinc; most lead ores contain this metal and many smelters add it to the blast furnace charge in the form of residues containing as much as 12 weight percent zinc.

The slag is fed to the fume furnace in a molten state, and pulverized coal is added to maintain temperature by combustion. By maintaining an elevated temperature, a fume is generated from the slag that contains zinc, germanium, lead, cadmium, chlorine, and fluorine. The fume is condensed and processed to recover primarily zinc and lead. The lead fraction is recycled to the sintering process. The presence of chlorine and fluorine in the fume necessitates a leaching step to avoid accumulation of these elements.

A matte is sometimes separated from the slag in this operation for recovery of substantial amounts of copper and silver from the dezinced slag. When fuming has subsided, the slag is dumped and cooled with water.

2. Input Materials - Composition of the blast furnace slag charged to the fume furnace is shown in Table 3-19 of Process No. 5. Two tons of slag are generated per ton of crude lead bullion produced by the blast furnace. Pulverized coal is added to maintain temperature by combustion. The amount is not specified in the literature.

3. Operating Conditions - The slag temperature range is 1000° to 1200°C. Atmospheric pressure is used (1).

4. Utilities - Air is injected into the furnace for combustion of the coal. Quantities are not cited in the literature (2).

Water is used for slag cooling and granulation in amounts ranging from 200 to 8,200 cubic meters per day (3), the amount depending upon the design of cooling water circuit at a given plant. A typical analysis is given in Table 3-23.

5. Waste Streams - The exhaust gas from the furnace typically has a low SO_2 concentration. The literature (2) cites a value of 0.02 volume percent for a flow rate of 5,660 normal cubic meters per minute. Gas stream temperature is about 1200°C.

The exit gas also contains high concentrations of particulate and fume composed of the volatile components of the blast furnace slag. The literature does not cite quantities or composition.

The dumped slag and water used for granulation constitute the major waste stream from the process. The slag is made up of various compounds of iron, calcium, silicon, aluminum, magnesium, and other elements. The water-

TABLE 3-23. WASTE EFFLUENTS FROM SLAG GRANULATION

Parameter	Total plant intake mg/l	Total plant discharge mg/l	Net change, mg/l	Net loading kg/ton
pH	7.6	8.3	-	-
Alkalinity	203	186	-17	NLC[a]
COD	8	8	0	0
Total solids	-	-	-	-
Dissolved solids	408	500	92	0.89
Suspended solids	3	36	33	.32
Oil and grease	-	-	-	-
Sulfate (as S)	145	215	70	0.67
Chloride	18	-	-	-
Cyanide	-	-	-	-
Aluminum	-	-	-	-
Arsenic	-	-	-	-
Cadmium	-	-	-	-
Calcium	70	-	-	-
Chromium	-	-	-	-
Copper	0.02	0.02	0	0
Iron	1.70	-	-	-
Lead	0.12	0.30	0.18	0.0018
Magnesium	.31	-	-	-
Mercury	-	-	-	-
Molybdenum	-	-	-	-
Nickel	0.03	0.04	0.02	0.00018
Potassium	-	-	-	-
Selenium	-	-	-	-
Silver	-	-	-	-
Sodium	-	-	-	-
Tellurium	-	-	-	-
Zinc	0.05	0.12	0.38	0.0037

Process water flow: 6 million liters/day.

Production: 695 metric tons/day.

Source: This contract and 1971 RAPP data.

Notes:

[a] NLC = no load calculable.

soluble portions are leached by the cooling water. Table 3-23 presents analyses of the intake and outflow streams of water used for slag granulation.

6. Control Technology - The exhaust gas from the fuming furnace is cooled by waste heat boilers or cooling chambers before being sent to baghouses for removal of particulate and condensed volatiles. Baghouse operation is limited to a maximum temperature of 285°C. Particulate removal efficiency ranges from 95 to 99 percent (4). It is preferable to operate the baghouse at the lowest possible temperature to allow removal of volatile matter contained in the gas stream. Section 2, Process No. 6, gives additional details.

Slag disposal is the same as described in Process No. 5, involving conveyance with the granulating water stream to a dump or tailings pond, use of concrete settling pits, ground sealing, and diversion of run-off.

The varied treatment and disposal practices for slag granulation water are summarized in Table 3-25. Normally, it is desirable to recycle the water after cooling and clarification. A smaller stream is bled off to neighboring surface water to control buildup of water-soluble components. The best available control technology for wastewater treatment is a combination of neutralization and clarification; the resulting effluent concentrations are presented in Table 3-24.

TABLE 3-24. EFFLUENT CONCENTRATIONS WITH NEUTRALIZATION AND CLARIFICATION

Component	Concentration, mg/l
Cadmium	0.5
Lead	0.5
Mercury	0.005
Zinc	5.0

These values are currently being met by five of the six lead smelters. Further information is given in Water Management (Section 6).

7. EPA Classification Code - None

8. References -

1. Encyclopedia of Chemical Technology. Interscience Publishers, a division of John Wiley and Sons, Inc. New York. 1967.

2. Arthur G. McKee & Co. Systems Study for Control of Emissions Primary Nonferrous Smelting Industry. U.S. Department of Health, Education, and Welfare. June 1969.

3. Hallowell, J.B., et al. Water Pollution Control in the Primary Nonferrous Metals Industry. Volume I, Copper, Zinc, and Lead

TABLE 3-25. PRIMARY LEAD SLAG GRANULATION WASTEWATER TREATMENT (5)

Plant	Treatment	Discharge
1	Sent to cooling pond.	8,230 m^3/day (2,200,000 gpd)
2	Sent to settling pit then to a cooling pond.	273 m^3/day (72,000 gpd)
3	Sent to settling pond and recycled.	0
4	Sent to two settling ponds in series.	Discharge is present but no quantities are available.
5	Sent to a slag pile.	No apparent discharge to surface. Leaching is not mentioned.
6	No data.	No data

Industries. Environmental Protection Agency. Washington, D.C. EPA-R2-73-274a. September 1973.

4. Vandegrift, A.E., L.J. Shannon, P.G. Gorman, E.W. Lawless, E.E. Salle, and M. Reichel. Particulate Pollutant System Study - Mass Emissions, Volumes 1, 2, and 3. U.S. Environmental Protection Agency (NTIS). Durham, North Carolina. PB-203 128, PB-203 522, and PB-203 521. May 1971.

5. Development Document for Interim Final Effluent Limitations Guidelines and Proposed New Source Performance Standards for the Lead Segment of the Nonferrous Metals Manufacturing Point Source Category. Environmental Protection Agency. EPA-440/1-75/032-a. February 1975.

Drossing

1. Function - Drossing is the initial step in refining lead bullion. Molten bullion from the blast furnace is placed into drossing kettles of 90 metric-ton capacity where submerged air lances provide agitation and oxidation. The kettle and molten bullion are cooled to a temperature at which lead is still a liquid but oxides of the common impurities and oxides of lead solidify. The term "dross" refers to any solid scum floating on top of a metal bath. Dross may contain varying amounts of lead, copper, tin, indium, arsenic, antimony, and bismuth. Because of the high specific gravity of molten lead, these solid oxides float and are easily skimmed off the molten lead. Drossing of the blast furnace bullion always occurs before the lead is sent to the refinery.

For more complete removal of copper, sulfur is added to the drossing kettle. This sulfur combines with the remaining copper forming cuprous sulfite (CU_2S), which floats and is skimmed off with the rest of the dross. By drossing, a bullion with copper content as high as 2 percent can be reduced to approximately 0.005 percent copper (1).

The dross is sent to a dross reverberatory furnace for further treatment and recovery of marketable products. Dross may typically contain 90 percent lead oxide, 2 percent copper, and 2 percent antimony, in addition to other values such as gold, silver, arsenic, bismuth, indium, zinc, tellurium, nickel, selenium, and sulfur. The collected dross amounts to 10 to 35 percent of the blast furnace bullion (1). A typical assay of drossed bullion is shown in Table 3-26.

2. Input Materials - During the drossing procedures sulfur is added in a ratio of approximately 1 kilogram per ton of bullion from the blast and dross reverberatory furnace. Various amounts of coal or coke, ammonium chloride, soda ash (Na_2CO_3), and litharge or baghouse fume (PbO) are added to the kettles as needed.

3. Operating Conditions - The molten bullion is cooled to a temperature of 370° to 500°C and maintained within that range. Pressures are atmospheric (1).

4. Utilities - Most of the drossing kettles are heated with natural gas. About 1.1 million kilocalories per metric ton are consumed during this stage, of which 90 percent is allocated to gas and 10 percent to oil (2). Conveyors, agitators, pumps, and similar equipment are powered by electricity. Air is injected by submerged lances for supplementing oxidation and agitation (1,5,6). Quantities of electrical and air consumption are not given in the literaure.

5. Waste Streams - The drossing operation generates small amounts of air pollutants and slag. The air pollutants are SO_2 and volatile components of the lead bullion. A typical analysis of the bullion was presented in Table 3-18. Varying quantities of copper, iron, arsenic, zinc, cadmium, antimony,

TABLE 3-26. LEAD BULLION ANALYSIS (1,3,4)

Basis: As drossed

Element	Wt. percent
Ni	tr.
Ag	0.13-0.31
Au	1.2-3.1[a]
Cu	0.08-0.005
Fe	0.7-0.8
Te	0.01-0.03
As	0.7-1.1
Sb	1.0-1.75
Bi	0.01-0.03
Se	tr.
Sn	tr.

[a] Value of Au in g/metric ton.
tr. = trace.

and bismuth may be volatilized; it is believed that the quantities are very small because of the low temperatures. The SO_2 content of the off-gas is very low, usually less than 0.05 percent by volume. Flow rates of exit gases from a blast furnace are typically 5,100 to 5,500 normal cubic meters per meters per minute. Temperatures of these gases are low, approximately 200° to 300°C (6). The particulate leading has been quantified by one source as being between 1.0 and 21.7 grams per cubic meter of off-gas (7). Another source cites the emission rate as 10 kilograms per metric ton of lead produced.

6. Control Technology - No control methods are presently applied to the weak SO_2 stream emitted from the drossing operation. The best available technology is chemical scrubbing.

Particulates and fumes from the drossing kettles are combined with the blast furnace off-gas at all plants. As mentioned earlier, five plants use baghouses and one plant uses an ESP. Control efficiency is estimated at 95 to 99.8 percent. Additional information is given in Section 2, Process No. 6.

7. EPA Source Classification Code - None

8. References -

1. Encyclopedia of Chemical Technology. Interscience Publishers, a division of John Wiley and Sons, Inc. New York. 1967.

2. Fejer, M.E., and D.H. Larson. Study of Industrial Uses of Energy Relative to Environmental Effects. U.S. Environmental Protection Agency. Research Triangle Park, North Carolina. July 1974.

3. Development Document for Interim Final Effluent Limitations Guidelines and Proposed New Source Performance Standards for the Lead Segment of the Nonferrous Metals Manufacturing Point Source Category. Environmental Protection Agency. EPA-440/1-75/032-a. February 1975.

4. PEDCo-Environmental Specialists, Inc. Trace Pollutant Emissions from the Processing of Metallic Ores. August 1974.

5. Background Information for New Source Performance Standards: Primary Copper, Zinc, and Lead Smelters. Volume I, Proposed Standards. Environmental Protection Agency. Research Triangle Park, North Carolina. EPA-450/2-74-002a. October 1974.

6. Arthur G. McKee & Co. Systems Study for Control of Emissions Primary Nonferrous Smelting Industry. U.S. Department of Health, Education, and Welfare. June 1969.

7. Jones, H.R. Pollution Control in the Nonferrous Metals Industry. Noyes Data Corporation. Park Ridge, New Jersey. 1972.

Dross Reverberatory Furnace

1. Function - Dross removed from the lead bullion requires further treatment for separation of components. As cited in Process No. 7, the dross is composed of about 90 percent lead oxide, 2 percent copper, 2 percent antimony, and lesser amounts of other elements. Prior to smelting, the dross may be treated with soda ash, litharge or baghouse fumes, coke, and sulfur to produce matte and speiss containing high ratios of copper to lead. Whether treated or not, the dross is charged into a reverberatory furnace along with pig iron, silica, and lime rock (optional).

Smelting of the charge separates the products into four layers: slag on top, matte and speiss intermediate, and molten lead at the bottom. Through the use of suitably placed taps on the furnace, each layer can be removed separately. The slag, amounting to 2 to 4 weight percent of the dross charge, is returned to the blast furnace for smelting. The slag typically assays 6 percent copper, 38 percent lead, 11 percent zinc, 11 percent FeO, and 16 percent SiO_2 (1). The matte and speiss are tapped separately, granulated, and shipped to copper smelters for recovery of copper and precious metals. The matte amounts to 10 to 14 weight percent of the dross charged; the speiss, 20 to 30 percent. The collective assay of these materials is 42 percent copper, 38 percent lead, 16 percent sulfur, 1 percent iron, and 0.6 percent arsenic, plus small amounts of zinc, rare earths, and precious metals (1). The lead layer is 94 to 98 percent lead and comprises 50 weight percent of the dross charged. It is returned to the blast furnace.

2. Input Materials - Along with the dross, the process requires the addition of pig iron, silica, and limestone. The amounts of these materials vary with each charge, depending upon dross composition. If soda treatment is used, equal amounts of soda ash, litharge, coke, and sulfur are added. Each is 3 to 5 percent by weight of the dross charged.

3. Operating Conditions - Smelting temperatures are the same as those in the blast furnace, ranging from 1000° to 1200°C. Smelting is done at atmospheric pressure.

4. Utilities - Gas or oil fuels are used for heating and maintenance of temperature. Quantities are not given in the literature.

5. Waste Streams - Atmospheric emissions are the only form of pollution from the dross reverberatory furnace. Particulate emission rates are 10 kilograms per metric ton of lead produced (2). The reference does not indicate whether this emission includes condensed fume. Sulfur dioxide, carbon dioxide and monoxide, sulfur trioxide, and nitrogen and its compounds are released to the atmosphere as products of combustion. The exit gas volume from a dross reverberatory ranges from 30 to 170 normal cubic meters per minute (2,3). The SO_2 content of this gas is usually below 0.05 percent. Exhaust gases are about 760° to 980°C (2).

Water used in matte and speiss granulation is evaporated before transport.

All solids are recycled or marketed.

6. Control Technology - No control methods are now used for the weak SO_2 stream emitted from the drossing reverberatory. The best available technology is chemical scrubbing.

Particulates and fumes from the drossing reverberatory are combined with the blast furnace off-gas at all plants. As mentioned earlier, all plants use baghouses. Control efficiency is estimated at 95 to 99.8 percent.

7. EPA Source Classification Code - None

8. References -

1. Encyclopedia of Chemical Technology. Interscience Publishers, a division of John Wiley and Sons, Inc. New York. 1967.

2. Jones, H.R. Pollution Control in the Nonferrous Metals Industry. Noyes Data Corporation. Park Ridge, New Jersey. 1972.

3. Arthur G. McKee & Co. Systems Study for Control of Emissions Primary Nonferrous Smelting Industry. U.S. Department of Health, Education, and Welfare. June 1969.

Cadmium Recovery

1. Function - The flue dusts generated by lead smelting are processed to recover cadmium values. Since dust from blast furnace exhaust gases is recycled to the sintering machine, sinter dust becomes enriched in cadmium, thallium, and zinc. When cadmium content in the dust reaches 12 weight percent or greater, the dust is subjected to a separate roasting operation for cadmium separation and recovery (1).

Roasting, performed in a Godfrey roaster, a special small heated enclosure, (see Section 2, Process No. 17), causes cadmium, thallium, indium, and selenium to be volatilized from the dust charge (2). The fume is cooled and collected for shipment to a zinc smelter for further processing. The roaster residue, which contains zinc, lead, and antimony, is returned to the sintering machine.

2. Input Materials - Flue dust collected from the sintering machine exhaust gases is the only input material.

3. Operating Conditions - Operating temperature and pressure are not reported.

4. Utilities - Equipment can be oil- or gas-fired (1). No quantities are specified in the literature.

5. Waste Streams - Fume emissions from the roaster are cooled and recovered as product. The roaster residue is recycled. Data for fume capture are not furnished in the literature.

There are no liquid or solid wastes from cadmium recovery.

6. Control Technology - The flue dust and fume emitted from the roaster can be contained by further cooling with water sprays and collection in a baghouse.

7. EPA Source Classification Code - None

8. References -

1. Arthur G. McKee & Co. Systems Study for Control of Emission Primary Nonferrous Smelting Industry. U.S. Department of Health, Education, and Welfare. June 1969.

2. Hallowell, J.B., et al. Water Pollution Control in the Primary Nonferrous Metals Industry. Volume I, Copper, Zinc, Lead Industries. Environmental Protection Agency. Washington, D.C. EPA-R2-73-274a. September 1973.

Reverberatory Softening

1. Function - The drossed lead bullion is further purified by a process termed "softening", which entails removal of the elements that make lead hard, notably arsenic, antimony, and tin. Several other softening processes can be used (Process No's. 11 and 12) (1,2).

The reverberatory method is similar to the drossing procedure and is particularly applicable to processing bullion with a wide range of impurities. The bullion is charged into a reverberatory furnace, melted, and blown with air to effect oxidation of the arsenic, antimony, tin, and other impurities. If hardness of the feed bullion is greater than 0.3 to 0.5 weight percent antimony equivalent, litharge is added to increase the rate of impurity oxidation (1).

Furnaces with capacities of up to 300 metric tons are used for the process. The oxides rise to the surface to form a slag that is skimmed off and further treated to recover contained values. The softened lead is tapped from the bottom of the furnace and pumped to the desilverizing process. Table 3-27 presents typical analyses of the softened bullion product and the softened slag. Hardness of the softened bullion is less than 0.03 weight percent antimony equivalent.

2. Input Materials - An analysis of drossed lead was presented in Table 3-26 (Process No. 7). Litharge is added only when especially hard bullion is processed. Coke or coal may be added to inhibit the oxidation of lead.

3. Operating Conditions - Temperatures during softening reach 700°C. Pressures are atmospheric (1).

4. Utilities - Electricity is the power source for mechanical agitators, pumps, and conveyors. Most of the heat is supplied by the exothermic oxidation of impurities. Gas or oil is used to begin the reaction and maintain the temperature. Air is injected through lances or pipes into the bath. Air consumption is not reported.

5. Waste Streams - The air blow from the furnace is the only waste stream for the process. No data are reported for fume emissions.

There are no liquid or solid wastes from reverberatory softening.

6. Control Technology - No controls of atmospheric fume emissions are reported. The exhaust gas could be routed to blast furnace baghouses.

7. EPA Source Classification Code - None

TABLE 3-27. TYPICAL COMPOSITIONS OF SOFTENED LEAD BULLION AND SLAG (1)
(AMOUNTS IN WEIGHT PERCENT)

Constituent	Softened lead bullion	Softened slag (liquid dross)
Pb		75.
Cu	0.004	0.005
Se		tr
Te		tr
As	0.001	1.7
Sb	0.025	12.0
Sn		tr
Ag	0.15	tr
Au	1.25[a]	tr

[a] Value for gold in grams per metric ton.

tr - trace.

8. References -

1. Encyclopedia of Chemical Technology. Interscience Publishers, a division of John Wiley and Sons, Inc. New York. 1967.

2. Development Document for Interim Final Effluent Limitations Guidelines and Proposed New Source Performance Standards for the Lead Segment of the Nonferrous Metals Manufacturing Point Source Category. Environmental Protection Agency. EPA-440/1-75/032-a. February 1975.

Kettle Softening

1. Function - Arsenic, antimony, and tin may be removed from the drossed lead bullion by kettle softening. Other softening methods are reverberatory (Process No. 10) and Harris (Process No. 12). Unlike the reverberatory method, in which air is blown through molten bullion, the kettle method entails addition of oxidizing agents to remove impurities. Application is usually limited to treating bullion with a relatively low impurity content, 0.3 weight percent or less antimony equivalent (1,2).

Drossed bullion is charged to a kettle and melted. Oxidizing fluxes such as caustic soda (NaOH) and niter ($NaNO_3$) are then added while the charge is agitated. The fluxes react with the impurities to form a series of salts such as sodium antimonate ($NaSbO_3$) (1,3). A slag containing the oxidized impurities results. When the reactions are complete, agitation of the kettle is stopped and the slag rises to the top of the kettle, where it is skimmed off; the purified lead bullion is sent to the desilvering process. Composition of the softened bullion is similar to that shown in Table 3-27 (Process No. 10); residual hardness is less than 0.03 weight percent antimony equivalent.

2. Input Materials - In addition to the drossed lead bullion, caustic soda and sodium nitrate (niter) are required for fluxing. Amounts depend upon the impurity content of the feed bullion; a slight excess over stoichiometric requirements is desirable for effective removal of impurities.

3. Operating Conditions - A kettle temperature of 700°C is required. Pressure is atmospheric (1).

4. Utilities - Electricity is used to power the process equipment, such as agitators and conveyors. Gas or oil are used to heat the kettle and maintain temperature.

5. Waste Streams - Atmospheric emissions containing oxides of nitrogen are released during kettle softening. Details are unreported.

There are no liquid wastes from this process.

The slag containing oxidized impurities is discarded. This material contains lead as well as water-soluble sodium oxide salts of arsenic, tin, and antimony. The amount of slag generated is not reported.

6. Control Technology - The controls used for atmospheric emissions are not known.

Slag is dumped with that generated in either the blast furnace or fuming furnace (2). There is no recognized control technology for disposition of this slag. Substitution of Harris softening (Process No. 12) is recommended.

7. EPA Source Classification Code - None

8. References -

1. Encyclopedia of Chemical Technology. Interscience Publishers, a division of John Wiley and Sons, Inc. New York. 1967.

2. Hallowell, J.B., et al. Water Pollution Control in the Primary Nonferrous Metals Industry - Volume I. Copper, Zinc, and Lead Industries. Environmental Protection Agency. Washington, D.C. EPA-R2-73-274a. September 1973.

3. Development Document for Interim Final Effluent Limitations Guidelines and Proposed New Source Performance Standards for the Lead Segment of the Nonferrous Metals Manufacturing Point Source Category. Environmental Protection Agency. EPA-440/1-75/032-a. February 1975.

Harris Softening

1. Function - In addition to reverberatory and kettle softening, removal of arsenic, antimony, and tin from drossed lead bullion can also be accomplished by the Harris process. As with kettle softening, the process is most applicable in treating bullions containing 0.3 percent or less antimony.

The process consists of two operations. The initial pyrometallurgical step is the same as the kettle softening process. The drossed bullion is charged to a kettle, melted, and agitated. Sodium nitrate and sodium hydroxide are added to react with the impurities and form sodium oxide salts. A slag containing these impurities is skimmed off, and the purified lead is sent to the desilvering process (1).

The second operation is a hydrometallurgical treatment of the cooled slag. The slag is crushed and leached with hot water to dissolve the sodium salts. After filtration, the depleted slag filter cake is discarded, and the solution is cooled to preferentially precipitate sodium antimonate. After separation by filtration, the antimony-rich filter cake is subjected to further processing (Process No. 13), and the filtrate is mixed with lime to precipitate calcium salts of arsenic and tin in separate operations.

Upon removal from solution, the calcium arsenate is reported to be sold to insecticide manufacturers, and the calcium stannate is shipped to tin producers. The residual sodium hydroxide solution is evaporated to produce dry sodium hydroxide, which is recycled to the softening process.

2. Input Materials - Aside from the drossed lead bullion, sodium hydroxide and sodium nitrate are required in slightly more than stoichiometric amounts for fluxing. Unspecified amounts of process water are fed to the operation for slag leaching. Lime is required in quantities sufficient to precipitate salts of arsenic and tin.

3. Operating Conditions - Maximum temperatures are 700°C for the pyrometallurgical operation, 100°C for hydrometallurgical processing, and more than 200°C for sodium hydroxide evaporation (2). Atmospheric pressure is maintained during all operations.

4. Utilities - Process equipment, such as agitators, pumps, and conveyors, are powered by electricity.

Gas or oil is utilized for kettle heating, temperature maintenance, and sodium hydroxide recovery.

5. Waste Streams - Other than the atmospheric emissions noted for kettle softening (Process No. 11), the leached slag constitutes the only waste stream of the process. It is not water soluble (1). Composition and quantity of slag are not reported.

6. Control Technology - The leached slag is dumped together with slag from the blast furnace or fuming furnace.

7. EPA Source Classification Code - None

8. References -

1. Hallowell, J.B., et al. Water Pollution Control in the Primary Nonferrous Metals Industry - Volume I. Copper, Zinc, and Lead Industries. Environmental Protection Agency. Washington, D.C. EPA-R2-73-274a. September 1973.

2. Encyclopedia of Chemical Technology. Interscience Publishers, a division of John Wiley and Sons, Inc. New York. 1967.

Antimony Recovery

1. Function - Slags from the softening processes (Process No's. 10, 11, 12) are treated in order to separate and recover the contained mineral values, notably arsenic, tin, and antimony. Two methods are commonly used to recover antimony, depending upon the product desired.

If antimonial lead or "hard lead" is desired, the softening slag is subjected to a reduction process. The slag is charged to a furnace and heated with a reducing agent and slagging fluxes. Since the oxidation potential of the other minerals in the charge is higher, the oxides of lead and antimony are preferentially reduced. Slag is formed and skimmed off while the metallic mixture of lead and antimony is tapped as a marketable product. If the slag is rich in tin, it may be sold to a tin producer; otherwise, it is recycled to the sintering process or blast furnace (1).

If the desired product is antimony trioxide (Sb_2O_3), the softening slag feed is treated by a volatilization process. The slag is fed to a furnace, where it is heated to volatilize arsenic trioxide and antimony trioxide. Since arsenic trioxide is more volatile, it is driven off first and is separated from the antimony trioxide by selective condensation (2). Collection of the oxides consists of condensing the volatilized fume and capturing it in an electrostatic precipitator or a baghouse. The recovered antimony trioxide is sent to antimony refining plants, usually located nearby. Recovered arsenic trioxide may be sold to arsenic processors. The nonvolatilized furnace residue, containing appreciable lead values, is returned to the blast furnace or sintering process.

2. Input Materials - Slag from the softening processes is the main input; it contains primarily lead, arsenic, antimony, and tin. A typical analysis is presented in Table 3-27 (Process No. 10). For production of hard lead, coke or charcoal is used as a reductant, the quantity dependent on feed slag composition. Soda ash or silica is used as a flux. No quantitative data are reported.

3. Operating Conditions - Temperatures range from 800° to 900°C. Pressures are atmospheric (2).

4. Utilities - Gas or oil is used to maintain furnace temperatures. Electricity is required for operation of conveyors. In antimony trioxide production, cooling water is required for fume condensation. No quantitative data are furnished in the literature.

5. Waste Streams - In the volatilization process, the air stream carrying the oxide fume is released to the atmosphere after condensation and collection.

There are no liquid wastes from antimony recovery.

The arsenic trioxide, if it cannot be sold, represents the only solid waste from the process.

6. Control Technology - In the volatilization and condensation process, the fume stream passes through an electrostatic precipitator or baghouse (3). Details on these collection devices are given in Section 2, Process No. 3.

No established control for excess arsenic trioxide has been developed.

7. EPA Source Classification Code - None

8. References -

1. Hallowell, J.B., et al. Water Pollution Control in the Primary Nonferrous Metals Industry. Volume I, Copper, Zinc, and Lead Industries. Environmental Protection Agency. Washington, D.C. EPA-R2-72-274a. September 1973.

2. Encyclopedia of Chemical Technology. Interscience Publishers, a division of John Wiley and Sons, Inc. New York. 1967.

3. Development Document for Interim Final Effluent Limitations Guidelines and Proposed New Source Performance Standards for the Lead Segment of the Nonferrous Metals Manufacturing Point Source Category. Environmental Protection Agency. EPA-440/1-75/032-a. February 1975.

Parkes Desilverizing

1. Function - Gold and silver are removed from the softened lead bullion by the Parkes desilverizing process. These metals do not oxidize easily and they are not removed by any of the previous refining steps. The Parkes desilverizing process is based on the fact that gold and silver have a greater affinity for zinc than for lead. Therefore, zinc is added to the molten lead bullion to form alloys with the copper, gold, and silver contained in the bullion. These alloys are insoluble in the lead and rise to the surface, forming a crust that is skimmed off.

To simplify subsequent recovery processes, the gold and silver are often recovered in separate steps. Since gold and most of the copper are first to combine, zinc is added in two steps. The initial addition results in a crust rich in gold values (1,2). Following removal of this crust, the second addition of zinc is made to allow the removal of silver. Although these steps are not totally exclusive for either gold or silver, they do effect a good degree of segregation.

Because other metallic impurities, notably arsenic, can interfere with this process, they must be removed prior to this operation. Arsenic content in the bullion must be less than 0.10 weight percent (1).

2. Input Materials - Softened lead bullion is required for the process. Hardness equivalent to less than 0.03 combined weight percent of arsenic, antimony, and tin is desirable. A typical analysis for a softened bullion is presented in Table 3-27, Process No. 10.

Zinc is the only additive. The amount is 1 to 2 percent in excess of the amount required to saturate the lead bullion, i.e., 0.55 weight percent of bullion weight.

3. Operating Conditions - The bullion charge is heated to 540°C and then cooled to 40° to 93°C (1,3). Pressure is atmospheric.

4. Utilities - Gas or oil is used to heat the charge. Electricity is used to operate pumps and agitators. Utility quantities are not given in the literature.

5. Waste Streams - None

6. Control Technology - None

7. EPA Source Classification Code - None

8. References -

1. Encyclopedia of Chemical Technology. Interscience Publishers, a division of John Wiley and Sons, Inc. New York. 1967.

2. Hallowell, J.B., et al. Water Pollution Control in the Primary Nonferrous Metals Industry. Volume I, Copper, Zinc, and Lead Industries. Environmental Protection Agency. Washington, D.C. EPA-R2-73-274a. September 1973.

3. Development Document for Interim Final Effluent Limitations Guidelines and Proposed New Source Performance Standards for the Lead Segment of the Nonferrous Metals Manufacturing Point Source Category. Environmental Protection Agency. EPA-440/1-75/032-a. February 1975.

Retorting

1. Function - Crusts from the Parkes process are retorted to recover zinc for reuse in the desilvering process and to form a purified Doré metal. Dross is placed in graphite crucibles of 600 to 640 kilograms capacity; these are heated in a special Faber du Faur type furnace, and the zinc is vaporized. The zinc vapor is condensed in a cooling chamber and then tapped to bars or blocks for recycle. The remaining retort metal assays 140 to 400 kilograms Doré per metric ton of dross (1). Table 3-28 presents a typical analysis of this retort metal.

Table 3-28. TYPICAL RETORT ANALYSIS (1)

Constituent	% weight	Constituent	% weight
Doré	15.6-43.8	Copper	1.5-4.0
Zinc	1.5-2.5	Tellurium	0.2
Arsenic	0.4	Bismuth	0.25
Antimony	1.0	Lead	Remaining percentage

2. Input Materials - Crusts from the desilverizing process are the only input materials for this process. This dross is basically a gold-silver-zinc compound with small amounts of impurities such as antimony, copper, tellurium, bismuth, and lead.

3. Operating Conditions - Operating temperatures during retorting are between 1260° and 1320°C (1). Pressure is atmospheric.

4. Utilities - The retort furnaces are gas- or oil-fired. Electricity is consumed by transport apparatus. No quantities are cited.

5. Waste Streams - The only waste stream consists of small quantities of metallic fume escaping the condensing chamber. This fume is believed to be composed predominately of zinc, arsenic, antimony, and lead. No data were found on emission factors or constituents.

6. Control Technology - Several smelters control fume and particulate emissions with baghouses. Destruction of baghouse fabric at high temperatures is prevented by routing the gases through tubular cooling chambers prior to entering the baghouse. Control efficiencies of more than 98 percent are claimed. The collected flue dusts are recycled to the sintering machine. Other smelters use no control devices on retorts.

7. EPA Source Classification Code - None

8. References -

1. Encyclopedia of Chemical Technology. Interscience Publishers, a division of John Wiley and Sons, Inc. New York. 1967.

Cupelling

1. Function - Retort metal is purified in the process called cupelling. In a furnace called a cupel, the molten metal charge is successively blown with air and slagged to remove impurities and produce a relatively pure Doré. The difference in oxidation potentials of the impurities allows sequential removal of slags with distinct characteristics.

Zinc, arsenic, and antimony are oxidized first and removed; most of the lead content oxidizes next, forming a product called "good litharge". Upon removal, it is recycled to the softening process for use as an oxidizer. Bismuth, copper, and tellurium accumulate in the Doré until the final stages of cupelling, when they oxidize to a slag called "coppery litharge" because the copper content may be as high as 10 weight percent. Oxidizing agents are required to remove the last traces of copper and tellurium from the Doré. These latter slags are returned to smelting for further processing.

Cupels are rated according to Doré output. Usual capacities range from 2,850 to 11,300 kilograms per charge. When impurity removal is complete, the remaining gold-silver alloy is cast into bars for marketing. Purity is 99.9 percent.

2. Input Materials - Retort metal is the basic feed to the process. A typical analysis of the metal is given in Table 3-28, Process No. 15.

Sodium nitrate and silica flour are added to remove the last traces of copper and tellurium from the Doré. Amounts depend upon residual levels of the impurities.

3. Operating Conditions - Temperature of the cupel reaches 1150°C (1). Pressure is atmospheric.

4. Utilities - Gas or oil is used to heat the furnace. Pumps and agitators are electrically powered. Cooling water is pumped through jacketed furnace sections. Compressed air is injected into the charge for oxidation of impurities. A cold air stream is also blown across the face of the bath at a pressure of 70 to 87 grams per square centimeter to cause rippling, which hastens oxidation. No additional quantitative data are given.

5. Waste Streams - Process exhaust gases range in temperature from 1000° to 1100°C and contain metallic vapors (fume) as well as particulates. Zinc, lead, arsenic, and antimony comprise the fume. Particulates may contain any of the components listed in Table 3-28 (Process No. 15). Emission data are not present in the literature.

6. Control Technology - Several smelters control exhaust gases, cooling them by passage through tubular cooling chambers before routing them to baghouses. Collection efficiency greater than 98 weight percent is claimed. Collected dust is recycled to the smelter for further processing. Other smelters do not control cupel emissions.

7. EPA Source Classification Code - None

8. References -

1. Encyclopedia of Chemical Technology. Interscience Publishers, a division of John Wiley and Sons, Inc. New York. 1967.

Vacuum Dezincing

1. Function - Zinc added to the bullion in the desilverizing process is removed by dezincing. The vacuum distillation method is used most widely in the industry because the recovered metallic zinc can be directly recycled to the desilvering process. Alternate methods are chlorine dezincing (Process No. 18) and Harris dezincing (Process No. 19).

Desilverized lead is charged into a kettle and heated. An inverted bell is placed on top of the kettle with its skirt projecting into the molten lead to form a vacuum seal. A vacuum is drawn in the bell and is held for about 2.5 hours, during which the bath is agitated to bring the zinc to the surface. The zinc vaporizes and is condensed on the water-cooled dome of the bell. On completion of the process, the vacuum is broken, the bell removed, and the solidified zinc peeled from the surface of the bell.

The product bullion typically is analyzed as less than 0.001 weight percent zinc, 0.0003 weight percent antimony, and 0.15 weight percent bismuth (1). The bullion is sent for debismuthizing or for casting if bismuth content is low (2).

2. Input Materials - Desilverized lead bullion typically containing 0.5 to 1.0 weight percent zinc is the only feed material (3).

3. Operating Conditions - The molten lead bath is maintained at 580° to 595°C (1,2) with an operating pressure of 50 to 60 microns absolute (1).

4. Utilities - Gas or oil is used to maintain the kettle temperature. Pumps, agitators, and conveyors are electrically powered. Cooling water is used to remove heat from the jacketed bell surface. Although no quantitative data are given in the literature, energy consumption is higher than in other dezincing processes because of the higher temperature requirements.

5. Waste Streams - None

6. Control Technology - None

7. EPA Source Classification Code - None

8. References -

1. Encyclopedia of Chemical Technology. Interscience Publishers, a division of John Wiley and Sons, Inc. New York. 1967.

2. Hallowell, J.B., et al. Water Pollution Control in the Primary Nonferrous Metals Industry. Volume I, Copper, Zinc, and Lead Industries. Environmental Protection Agency. Washington, D.C. EPA-R2-73-274a. September 1973.

3. Development Document for Interim Final Effluent Limitations Guidelines and Proposed New Source Performance Standards for the Lead Segment of the Nonferrous Metals Manufacturing Point Source Category. Environmental Protection Agency. EPA-440/175-032-a. February 1975.

Chlorine Dezincing

1. Function - Desilverized lead bullion requires removal of the zinc added during the desilverizing process. A process known as chlorine dezincing, or the Betterton process, can be used, as well as vacuum dezincing (Process No. 17) and Harris dezincing (Process No. 19).

Molten lead is pumped from a heated kettle to a reaction chamber into which gaseous chlorine is injected from a chlorine tank. Since reactivity of zinc with chlorine is greater than that of lead, zinc chloride is formed in the reactor and subsequently collects on the surface of the molten lead. The material skimmed from the lead contains small amounts of lead chloride and mechanically entrained lead prills. After treatment with metallic zinc for lead removal and recovery, a marketable by-product analyzed as 99 percent zinc chloride is obtained. The dezinced lead bullion is sent for debismuthizing or casting.

A 180-metric-ton kettle with an overall cycle of about 8 hours typically produces 16,300 metric tons of dezinced bullion per month. The bullion contains 0.005 weight percent zinc (1).

2. Input Materials - The desilverized lead bullion feed contains 0.5 to 1.0 weight percent zinc.

Chlorine is injected at a rate of 180 to 225 kilograms per hour into molten lead recirculated at a rate of 7 to 11 metric tons per minute (1).

3. Operating Conditions - A temperature of 370°C maintains the lead in a molten condition. Pressure is atmospheric (1).

4. Utilities - The kettle is heated with oil or gas. Electricity is used for pumps, agitators, and conveyors. No quantitative data regarding consumption are cited.

5. Waste Streams - None

6. Control Technology - None

7. EPA Source Classification Code - None

8. References -

1. Encyclopedia of Chemical Technology. Interscience Publishers, a division of John Wiley and Sons, Inc. New York. 1967.

Harris Dezincing

1. Function - Zinc added to the lead bullion for desilverizing requires removal by a dezincing process. The Harris dezincing process, consists of a pyrometallurgical step followed by a hydrometallurgical procedure. Alternate dezincing processes are vacuum (Process No. 17) and chlorine (Process No. 18).

The pyrometallurgical equipment is the same as for Harris softening (Process No. 12), i.e., a charging kettle, a reaction cylinder, and a molten lead pump. In a typical cycle, desilverized lead bullion is charged to the kettle and then pumped, in a molten state, through the reaction cylinder, which contains a small amount of caustic soda saturated with lead oxide. The saturated caustic remains from the previous dezincing cycle. Upon contact with the molten lead, the lead oxide in the caustic reacts with the zinc to form zinc oxide, which in turn reacts with caustic to form sodium zincate. After 30 minutes of lead recirculation, pumping is stopped, fresh caustic is added to the cylinder to maintain salt fluidity, and the contents of the cylinder are emptied into a granulator tank. Fresh molten caustic is again pumped to the cylinder and recirculation of the lead bullion is resumed. The final caustic addition will become saturated with zinc and lead oxide and is held over for the next cycle. When dezincing is complete, the product contains less than 0.001 weight percent zinc and 0.0003 weight percent antimony. The dezinced lead is pumped from the kettle for debismuthizing or casting.

The spent salts from the granulation tank are treated hydrometallurgically. After granulation and solution in hot water, sodium zincate hydrolyzes to zinc oxide and sodium hydroxide. The zinc oxide precipitates from the solution and is recovered by filtration. It is subsequently dried and sold. The sodium hydroxide solution is evaporated and the resulting anhydrous caustic recycled (1).

2. Input Materials - Desilverized lead containing 0.5 to 1.0 weight percent lead is charged to the process. Anhydrous sodium hydroxide is required, the amount dependent upon the zinc content of the feed bullion. Water is used for the hydroextraction of by-products. No data as to quantities are given.

3. Operating Conditions - A temperature of 540°C is required for the pyrometallurgical operation. The temperature for hydroextraction is 100°C. Evaporation of the sodium hydroxide solution requires temperatures above 200°C. All operations are performed at atmospheric pressure (1).

4. Utilities - Kettle heating and soda evaporation of caustic require gas or oil as fuel. Electricity is used to operate pumps, agitators, and conveyors.

5. Waste Streams - None

6. Control Technology - None

7. EPA Source Classification Code - None

8. References -

1. Encyclopedia of Chemical Technology. Interscience Publishers, a division of John Wiley and Sons, Inc. New York. 1967.

Debismuthizing

1. Function - When the dezinced lead bullion contains 0.15 weight percent or more bismuth, it must be debismuthized before the final refining and casting process. The debismuthizing procedure is called the Betterton-Kroll process.

Calcium and magnesium are added to the molten lead to form ternary compounds (e.g., $CaMg_2Bi_2$) with the bismuth (1). The compounds have a higher melting point than lead, and a lower density. Therefore, when the temperature of the mixture is reduced to just above the melting point of lead, the metallic compounds solidify to form a dross that can be skimmed from the lead. To enhance physical separation, antimony or organic agents are sometimes added.

The purified lead is pumped to the casting operation, and the skimmed metallic compound is sent to bismuth recovery.

Cupel slags rich in bismuth may be similarly treated; the residual lead is returned to smelting.

2. Input Materials - Dezinced lead bullion fed to the process typically assays 0.001 weight percent zinc, 0.0003 weight percent antimony, and 0.15 weight percent bismuth (2). The quantities of calcium and magnesium added depend on the amount of bismuth to be removed. Twice as much calcium is added as magnesium. Cupel slags are added when bismuth content is high enough (20 to 25 weight percent) to warrant recovery. Antimony or organic compounds are added as needed to improve bismuth separation. The literature does not specify the organic compounds or the amounts.

3. Operating Conditions - The molten lead bath is maintained at 500° to 550°C (1,3) for calcium-magnesium addition and is cooled to 350°C for dross separation. Pressure is atmospheric.

4. Utilities - A small amount of gas or oil is required to maintain the lead bath temperature. Pumps and agitators are electrically powered.

5. Waste Streams - None

6. Control Technology - None

7. EPA Source Classification Code - None

8. References -

1. Development Document for Interim Final Effluent Limitations Guidelines and Proposed New Source Performance Standards for the Lead Segment of the Nonferrous Metals Manufacturing Point Source Category. Environmental Protection Agency. EPA-440/1-75/032-a. February 1975.

2. Encyclopedia of Chemical Technology. Interscience Publishers, a division of John Wiley and Sons, Inc. New York. 1967.

3. Hallowell, J.B., et al. Water Pollution Control in the Primary Nonferrous Metals Industry. Volume I, Copper, Zinc, and Lead Industries. Environmental Protection Agency. Washington, D.C. EPA-R2-73-274a. September 1973.

Bismuth Refining

1. Function - The dross generated by debismuthizing is processed for bismuth recovery. The material is placed in a furnace, where it is melted. Chlorine gas is injected, and the calcium, magnesium, zinc, and lead combine with the chlorine to form chlorides more readily than does bismuth. The chlorides form a solid slag that is skimmed from the surface of the molten bismuth. Air is then blown through the bismuth and a caustic soda flux is added to oxidize any residual impurities. After slag removal, the metal, which is now 99.99 percent bismuth, is cast into marketable shapes and sold (1).

2. Input Materials - The slag from the debismuthizing process is chiefly composed of ternary compounds of calcium, magnesium, and bismuth. Chlorine constitutes about 25 weight percent of the slag charged to the furnace. Caustic soda flux is used in varying amounts for oxidation of impurities. Charcoal is used as a cover during casting to maintain the bismuth in a reduced state.

3. Operating Conditions - Bath temperature during chlorination is 500°C. Subsequent temperatures for oxidation and casting are lower. Pressure is atmospheric (1).

4. Utilities - Gas or oil is used for heating and maintaining temperature. Electricity is used to run pumps and agitators. Compressed air is furnished to oxidize impurities. The literature does not state the quantities required.

5. Waste Streams - Exhaust gases to the atmosphere contain chlorine and fume. No emission quantities were found.

There are no liquid wastes from the process.

Slag composed of chlorides of calcium, magnesium, zinc, and lead is 40 weight percent of the dross fed to the process. Final oxidation generates a soda slag in unspecified amounts.

6. Control Technology - Control of atmospheric emissions is not practiced.

Slags are discarded with those generated in smelting. Further information is given in Process No's. 5 and 6. The chloride salts contained in the slag are very water-soluble and easily leached into adjacent water supplies. Existing practice does not represent good control technology.

7. EPA Source Classification Code - None

8. References -

1. Encyclopedia of Chemical Technology. Interscience Publishers, a division of John Wiley and Sons, Inc. New York. 1967.

Final Refining and Casting

1. Function - Refined lead bullion from dezincing or debismuthizing is given a final purification and cast into ingots. The refined lead is fluxed with oxidizing agents to remove remaining impurities such as lead oxide and magnesium or calcium residues. After slag removal by skimming, the lead, assayed as 99.999 percent purity, is reheated and sent to the casting operation, where it is formed into ingots or pigs. Most casting is performed by fully automated machines. Slag is recycled to the blast furnace (1).

2. Input Materials - Refined bullion containing a small amount of impurities is fed to the process. Caustic soda and sodium nitrate are used as oxidizing flux in amounts varying with the impurity of the lead (1,2). Water is used to cool the cast lead ingots by direct contact, at rates ranging from 300 to 1,500 liters per minute (3).

3. Operating Conditions - Temperatures for final purification range from 370° to 500°C; casting is at 540°C (1,4). Pressure is atmospheric.

4. Utilities - Gas or oil is required for heating. Pumps and agitators are electrically operated. The literature gives no data on quantities.

5. Waste Streams - Small amounts of atmospheric emissions are released during refining and casting operations. Emission factors and constituents have not been reported.

Direct-contact cooling water becomes contaminated with particulate matter, including lead and lead oxides.

6. Control Technology - There are no controls on the atmospheric emissions.

Several methods are used to handle the contaminated cooling water. The water is either recycled for use in slag granulation or is sent to a tailings pond for settling of suspended solids. A variation of the latter method, liming the effluent for precipitaton of solids, is also practiced (3).

7. EPA Source Classification Code - None

8. References -

1. Encyclopedia of Chemical Technology. Interscience Publishers, a division of John Wiley and Sons, Inc. New York. 1967.

2. Development Document for Interim Final Effluent Limitations Guidelines and Proposed New Source Performance Standards for the Lead Segment of the Nonferrous Metals Manufacturing Point Source Category. Environmental Protection Agency. EPA-440/1-75/032-a. February 1975.

3. Hallowell, J.B., et al. Water Pollution Control in the Primary Nonferrous Metals Industry. Volume I, Copper, Zinc, and Lead Industries. Environmental Protection Agency. Washington, D.C. EPA-R2-73-274a. September 1973.

4. PEDCo-Environmental Specialists, Inc. Trace Pollutant Emissions from the Processing of Metallic Ores. August 1974.

SECTION 4

ZINC INDUSTRY

INDUSTRY DESCRIPTION

The major product of the primary zinc industry is metallic zinc; the industry also produces zinc oxide, sulfuric acid, cadmium, and occasionally other chemicals such as zinc sulfate. For the purpose of this analysis, the zinc industry is considered in segments: pyrometallurgical zinc production, electrolytic zinc production, zinc oxide production, and cadmium recovery. Production of other by-products such as germanium, thallium, gallium, and indium is not considered a part of this industry because it does not take place at primary zinc smelters.

Generally, ore is mined and concentrated at one location and then transferred to smelters for the production of zinc, zinc oxide, or both. Cadmium is normally recovered at smelters from collected dusts and slags with sufficient cadmium content. Direct zinc oxide production uses the same ore concentrate as metallic zinc production.

In 1976, approximately 6,700 people were employed in lead-zinc mining and milling operations. Zinc smelters, including secondary smelters, employed 4,100 people in 1976, including workers involved in by-product processes. Table 4-1 shows mining, production, and consumption totals for zinc and cadmium in the years 1972 to 1976. These data indicate that zinc and cadmium production have remained fairly constant over the past few years. Consumption has exceeded production; imports and shipments from government stockpiles have made up the difference. Reduced rate of economic activity has led to a 24 percent drop in slab zinc consumption in 1973-1976 (1). Imports of cadmium metal have been increasing.

The leading states for mine production in 1976 were Missouri and Tennessee, 17 percent each; New York, 16 percent; Colorado and Idaho, 10 percent each; and New Jersey, 7 percent. The 25 largest U.S. mines accounted for 91 percent of the zinc ore mined in 1976, and the five largest alone accounted for 43 percent (1). Available information on these mines is given in Table 4-2. A total of 43 zinc mines operated in 1975 (2).

Direct zinc oxide production is considered part of the primary zinc industry since the process involves the reduction of zinc concentrates followed by oxidation. Indirect zinc oxide production is not discussed, since slab zinc is used as the raw material.

TABLE 4-1. MINING, PRODUCTION, AND CONSUMPTION OF ZINC AND CADMIUM (1)
(metric tons)

	Mine production	Primary slab zinc production	Slab zinc consumption	Cadmium production (includes secondary)*	Cadmium consumption
1976 (est)	480	530	1150	2.2	5.8
1975	469	438	925	2.2	3.3
1974	500	555	1288	3.3	6.1
1973	479	583	1504	3.8	6.3
1972	478	633	1418	4.1	6.3

* There is no significant recycling of cadmium metal. All uses other than nickel-cadmium batteries and alloys are dissipative.

TABLE 4-2. TWENTY-FIVE LEADING ZINC MINES IN THE UNITED STATES (2,3)

Mine	Location	Company	Operations	Type of mining	Ore grade, percent	Annual ore tonnage	Products	Mineralization
Balmat	St. Lawrence, N.Y	St. Joe Minerals Corp	B	Underground	-	1 - 10 million	Lead, zinc	-
Buick	Iron, Mo.	Amax Lead Co. of Mo.	B	Underground	1.7	1 - 10 million	Lead,zinc conc. refined lead, sulfuric acid	Galena, Sphalerite, Chalcopyrite
Sterling	Sussex, N.J.	New Jersey Zinc Co.	B	Underground	-	198,000	Zinc ore,iron-mangenese ore	Zinc oxide, and silicates
Bunker Hill	Shoshone, Id.	Bunker Hill Co.	C	Underground	7-9 Pb-Zn	691,000	Lead,zinc,silver	Lead-zinc-silver
Eagle	Eagle, Co.	New Jersey Zinc Co.	B	Underground	-	206,000	Zinc conc.,lead conc,copper-silver ore	Marmatite, Galena
Zinc Mine Works	Jefferson, Tn.	U.S. Steel Corp.	B	Underground	-	100,000-500,000	Zinc	-
Blue Hill	Hancock, Maine	Kerramerica Inc.	B	Underground	-	-	Zinc,copper	-
Friedensville	Lehigh, Pa.	New Jersey Zinc Co.	B	Underground	-	400,000	Zinc conc., agricultural limestone	Sphalerite
New Market	Jefferson, Tn.	ASARCO	B	Underground	3	500,000-1 million	Zinc conc.	-
Burgin	Utah, Utah	Kennecott Copper	-	-	-	-	-	-
Austinville & Ivanhoe	Wythe, Va.	New Jersey Zinc Co.	B	Underground	-	596,000	Zinc conc.,lead conc.	Sphalerite, Gelena
Star Unit	Shoshone, Id.	Bunker Hill Co. & Hecla Mining Co.	B	Underground	-	282,000	Zinc,lead,silver	-
Leadville	Lake, Co.	ASARCO	B	Underground	16	100,000-500,000	Lead,zinc,silver	Sulfides
Ground Hog	Grant, N.M.	ASARCO	A	Underground	16	500,000-1 million	Zinc,lead,copper silver	Sphalerite, Gelena
Jefferson City	Jefferson, Tn.	New Jersey Zinc Co.	B	Underground	-	390,000	Zinc conc.,agric. limestone	Sphalerite
Edwards	St.Lawrence, N.Y.	St. Joe Minerals Corp.	B	Underground	-	-	Lead zinc	-
Shullsburg	LaFayette, Wisc.	Eagle-Picher Ind. Inc.	-	-	-	-	-	-

TABLE 4-2 (continued).

Mine	Location	Company	Operations	Type of mining	Ore grade, percent	Annual ore tonnage	Products	Mineralization
Idarado	San Miguel, Co.	Idarado Mining Co.	B	Underground	6.34	388,000	Zinc,lead,copper gold,silver, cadmium	Zinc,copper,lead, gold,silver, cadmium
Bruce	Yavapai, Az.	Cypress Mines Corp.	-	-	-	-	-	-
Sunnyside	San Juan, Co.	Standards Metals Corp	B	Underground	-	192,000	Gold,lead,zinc, silver,copper, cadmium	Galena, Sphalerite
Rend Oreille	Pend Oreille, Wa.	Pend Oreille Mines & Metals Co.	B	Underground	4-5 Pb-Zn	100,000-500,000	Zinc,lead,silver	Lead, zinc
Ozark	Reynolds, Mo.	Ozark Lead Co.	B	Underground	-	1-10 million	Lead & zinc conc.	Galena, Sphalerite
Young	Jefferson, Tn.	ASARCO	-	-	-	-	-	-
Magmont	Iron, Mo.	Cominco American Inc	B	Underground	8	1,042,000	Zinc conc.,copper cone, silver	Galena, Sphalerite Chalcopyrite
Viburnum #29	Washington, Mo.	St.Joe Minerals Corp.	-	-	-	-	-	-

All domestic zinc smelters produce cadmium. Collected flue dusts from roasting and sintering operations and cadmium-containing materials from refining and precipitation processes are treated hydrometallurgically for cadmium recovery at the zinc smelter.

Other metals recovered as by-products from zinc ore are germanium, thallium, indium, and gallium. This processing, however, is not done at primary zinc smelters in the U.S. Waste materials containing these metals are shipped as intermediate products or are disposed of as waste if the by-product content is not sufficient for recovery.

U.S. primary zinc demand is expected to increase at an annual rate of 2.6 percent through 1980. The decline in primary zinc production that began in 1969 started to reverse itself in 1976, with a 21 percent increase over tge previous year (1).

Primary domestic smelting capacity, however, has declined 47 percent since 1968, with the closing of eight smelters due to outdated equipment and environmental problems (4).

Jersey Miniere Zinc is constructing a new electrolytic refinery in Clarksville, Tennessee, with start-up scheduled for the second half of 1978; full capacity will be about 90,000 metric tons per year. Most concentrates will come from the company's new Elmwood and Gordonsville mines in Tennessee; a third mine is to be developed near Stonewall.

Raw Materials

Zinc is usually found in nature as the sulfide called sphalerite, which has a cubic lattice structure and is commonly referred to as zinc blende, blende, or jack. Zinc content can be 67.1 percent in the pure state. A polymorph of sphalerite, wurtzite, has a hexagonal structure and is more stable at elevated temperatures. Almost all other zinc minerals have been formed as oxidation products of these sulfides. A list of the most common zinc minerals is presented in Table 4-3. Most of these oxidized minerals are minor sources of zinc, although franklinite and zincite are mined for their zinc content at the New Jersey Zinc Co. mine (5).

What may prove to be one of the five largest massive zinc-copper sulfide deposits in North America has been discovered near Crandon, Wisconsin. Tests indicate the presence of about 70 million metric tons of ore, analyzed as 5 percent zinc and 1 percent copper (6).

Iron is the most common impurity or associated metal of zinc, owing to the chemical similarities and relative ease of substitution in their respective lattices. A sulfide zinc ore with a ratio of Fe: Zn above 1:8 is known as marmatite.

Cadmium is the second most abundant impurity of zinc. It is always associated with zinc, and is usually present as greenockite (CdS). Complete solid solutions exist between zinc and cadmium sulfides, but the cadmium content rarely exceeds 1 or 2 percent.

TABLE 4-3. COMMON ORES MINED FOR THEIR ZINC CONTENT (5)

ZnO	Zincite
$ZnSO_4 \cdot 7H_2O$	Goslarite
$ZnCO_3$	Smithsonite (or calamine in Europe)
$Zn_4Si_2O_7(OH)_2 \cdot H_2O$	Hemimorphite (or calamine in America, called electric calamine in Europe)
Zn_2SiO_4	Willemite
$(Zn_2Mn)O \cdot Fe_2O_3$	Franklinite
$2ZnCO_3 \cdot 3Zn(OH)_2$	Hydrozincite
ZnS	Sphalerite, wurtzite
$(Fe,Zn)S$	Marmatite

In zinc ores, commonly associated non-zinc minerals are calcite ($CaCO_3$), dolomite $(Ca,Mg)CO_3$, pyrite and marcasite (FeS_2), quartz (SiO_2), chalcopyrite ($CuFeS_2$), and barite ($BaSO_4$).

Zinc ores are processed at the mine to form concentrates containing typically 52 to 60 weight percent zinc, 30 to 33 weight percent sulfur, and 4 to 11 weight percent iron (7). Roasting at the plant lowers the sulfur content to about 2 percent. Other raw materials are required at the smelter for producing metallic zinc. Coke or coal and sand along with inert materials are required during pyrometallurgical sintering, in quantities depending upon the specific concentrate properties and the desired characteristics of the sinter. Coal or coke must also be added during reduction. Exact quantities are variable, depending on the properties of the feed and type of reduction furnace. In hydrometallurgical processing, sintering or pyrometallurgical reduction is not required but sulfuric acid is required for leaching the calcine.

The energy required for production of one metric ton of slab zinc is 8.8 to 16.4 million kilocalories depending on the process. In 1972, 9.6 billion kilocalories were used in the manufacture of primary zinc slabs, an average of 15.3 million per metric ton (8). This represents a 9 percent increase in efficiency of energy utilization over 1967, primarily due to the closing of inefficient horizontal retorts.

Products

The principal products of the primary zinc industry are metallic zinc, zinc oxide, and cadmium. Uses for these products are widely varied. Metallic zinc is used for galvanizing, for making pigments and zinc compounds, for alloying, and for grinding into zinc dust. Table 4-4 shows U.S. consumption of slab zinc for 1976. Usage patterns in the U.S. differ from those in the rest of the world in the heavy emphasis on zinc-base alloy castings, mainly for the automotive industry. The primary product of most zinc companies is slab zinc, which is produced in five grades and classified by its purity. These grades are presented in Table 4-5.

Zinc oxide is used in rubber, emollients, ceramics, and fluorescent pigments, and in the manufacture of other chemicals. Metallic cadmium is used in production of alloys, in corrosion-resistant plating for hardware, as a counter electrode metal for selenium rectifiers, as neutron shielding rods in nuclear reactors, in nickel-cadmium batteries, and in plastics and cadmium compounds. Cadmium metal accounts for 60 to 70 percent of consumption, and cadmium sulfide used for pigments for another 12 to 15 percent (10).

Companies

Capacities of the six primary zinc smelters and one zinc oxide plant that use primary concentrate feed are listed in Table 4-6. The three pyrometallurgical plants range in capacity from 57,000 to 227,000 metric tons per year. U.S. primary zinc capacity is about equally divided between pyrometallurgical and electrolytic processes. The single largest plant accounts for 35 percent of the total domestic primary capacity. All of the primary

TABLE 4-4. U.S. SLAB ZINC CONSUMPTION - (1976) (9)

	Metric tons	Percent
Galvanizing	342,893	38
Brass and bronze products	150,817	15
Zinc-base alloy	387,403	38
Rolled zinc products	27,088	3
Zinc oxide	35,405	3
Other	35,287	3
Total	1,028,893	100

TABLE 4-5. GRADES OF COMMERCIAL ZINC

	Consumption, percent weight			
	Zinc	Lead	Iron	Cadmium
Special high grade	99.990	0.003	0.003	0.003
High grade	99.90	0.07	0.02	0.03
Intermediate	99.5	0.20	0.03	0.40
Brass special	99.0	0.6	0.03	0.50
Prime western	98.0	1.6	0.05	0.50

TABLE 4-6. PRIMARY ZINC PROCESSING PLANTS IN THE UNITED STATES (12,13,14)

Company	Location	Description	Capacity metric ton/year	Date plant built
AMAX, Inc	East St. Louis, Illinois	Electrolytic	76,000	1929
ASARCO, Inc.	Corpus Christi, Texas	Electrolytic	98,000	1942
	Columbus, Ohio	Pyrometallurgical	20,000	1967
The Bunker Hill Co.	Silver King, Idaho	Electrolytic	98,000	1928
National Zinc Co.	Bartlesville, Oklahoma	Electrolytic	45,000	1977
New Jersey Zinc Co.	Palmerton, Pennsylvania	Pyrometallurgical	103,000	1899
St. Joe Minerals Corp.	Monaca, Pennsylvania	Pyrometallurgical	227,000	1930

smelters produce sulfuric acid as a by-product. In addition, three of these plants were responsible for over 75 percent of primary cadmium production in 1976 (1). Salient statistics for the domestic primary zinc industry in 1976 are presented in Table 4-7.

Environmental Impact

Uncontrolled atmospheric emissions from the primary zinc industry have decreased in recent years because of the increase in electrolytic zinc recovery operations and the closing of several retort zinc smelters. In 1969, zinc emissions to the atmosphere totalled 65 metric tons from mining and milling, and 45,350 metric tons from metallurgical processing (11). Sulfur dioxide is emitted from roasting and sintering operations, although the roaster SO_2 emissions are normally collected to produce sulfuric acid.

Smelter solid wastes are usually recycled for by-product metal recovery. Some sludges may require several months' storage before recycling, and others may be disposed of as landfill. Sludges and solid wastes generated during mining and concentration processes are disposed of at the mining site in tailings ponds or as mine backfill.

Liquid effluents can be classified as noncontact and contact. Noncontact water is used for cooling in heat exchangers. Contact, or process, wastewater is produced in such operations as scrubbing of roaster gas and reduction furnace gas, cooling of metal castings, cadmium production, and auxiliary air pollution controls. The pollutants of concern are primarily zinc and sulfates, accompanied normally by such elements as cadmium and lead, and small amounts of arsenic and selenium (9).

Limitations on liquid effluent and atmospheric emissions from new sources have been promulgated (12,13). The solid waste problem is currently under investigation.

Bibliography

1. Commodity Data Summaries, 1977. U.S. Department of Interior. Bureau of Mines. Washington, D.C. 1977.

2. 1975 E/MJ International Directory of Mining and Mineral Processing Operations. Mining Informational Services of the McGraw-Hill Mining Publications. New York. 1975.

3. McMahon, A.D., et al. Bureau of Mines Minerals Yearbook, 1973. U.S. Department of the Interior. U.S. Government Printing Office. 1973.

4. Deane, G.L., et. al. Cadmium: Control Strategy Analysis. GCA Corporation Report No. GCA-TR-75-36-G. U.S. Environmental Protection Agency. Research Triangle Park, North Carolina. April 1976. p. 157.

TABLE 4-7. PRINCIPAL STATISTICS FOR THE PRIMARY ZINC INDUSTRY IN THE UNITED STATES IN 1976 (9)
(metric tons)

Production:	
Mine, recoverable zinc	439,550
Smelter, slab zinc	510,218
Imports:	
Ores and concentrates (dutiable zinc content)	88,103
Slab zinc	648,184
Consumption:	
Slab zinc	1,028,893
Ores (recoverable zinc content)	91,846
Exports:	
Slab zinc	3,187

5. Smelting and Refining of Nonferrous Metals and Alloys. 1972 Census of Manufacturers. Publication MC72(2)-33C Bureau of the Census. U.S. Department of Commerce. 1972.

6. U.S. Department of the Interior, Bureau of Mines. Minerals and Materials/A Monthly Survey, 55. July 1977.

7. Schlechten, A.W., and A. Paul Thompson. Zinc and Zinc Alloys. In: Kirk-Othmer. Encyclopedia of Chemical Technology. Interscience Division of John Wiley and Sons, Inc. New York. 1967.

8. Fejer, M.E., and D.H. Larson. Study of Industrial Uses of Energy Relation to Environmental Effects. EPA-450/3-74-044. U.S. Environmental Protection Agency. Research Triangle Park, North Carolina. July 1974.

9. U.S. Department of Interior, Bureau of Mines. Mineral Industry Surveys. Zinc Industry in July 1977. October 4, 1977.

10. Jones, H.R. Pollution Control in the Nonferrous Metals Industry 1972. Noyes Data Corporation. Park Ridge, New Jersey.

11. W.E. Davis and Associates. National Inventory of Sources and Emissions Section V, Zinc. Report No. APTD-1139. National Technical Information Service, U.S. Department of Commerce. Springfield, Virginia. May 1972.

12. Background Information for New Source Performance Standards: Primary Copper, Lead, and Zinc Smelters. Office of Air and Waste Management. U.S. Environmental Protection Agency. Research Triangle Park, North Carolina. EPA-450/2-74-002a. October 1974.

13. Development Document for Interim Final Effluent Limitations Guidelines and Proposed New Source Performance Standards for the Zinc Segment of the Nonferrous Metals Manufacturing Point Source Category. U.S. Environmental Protection Agency. Washington, D.C. EPA-440/1-75/032. November 1974.

14. American Bureau of Metal Statistics. Nonferrous Metal Data 1975. New York, New York. 1976.

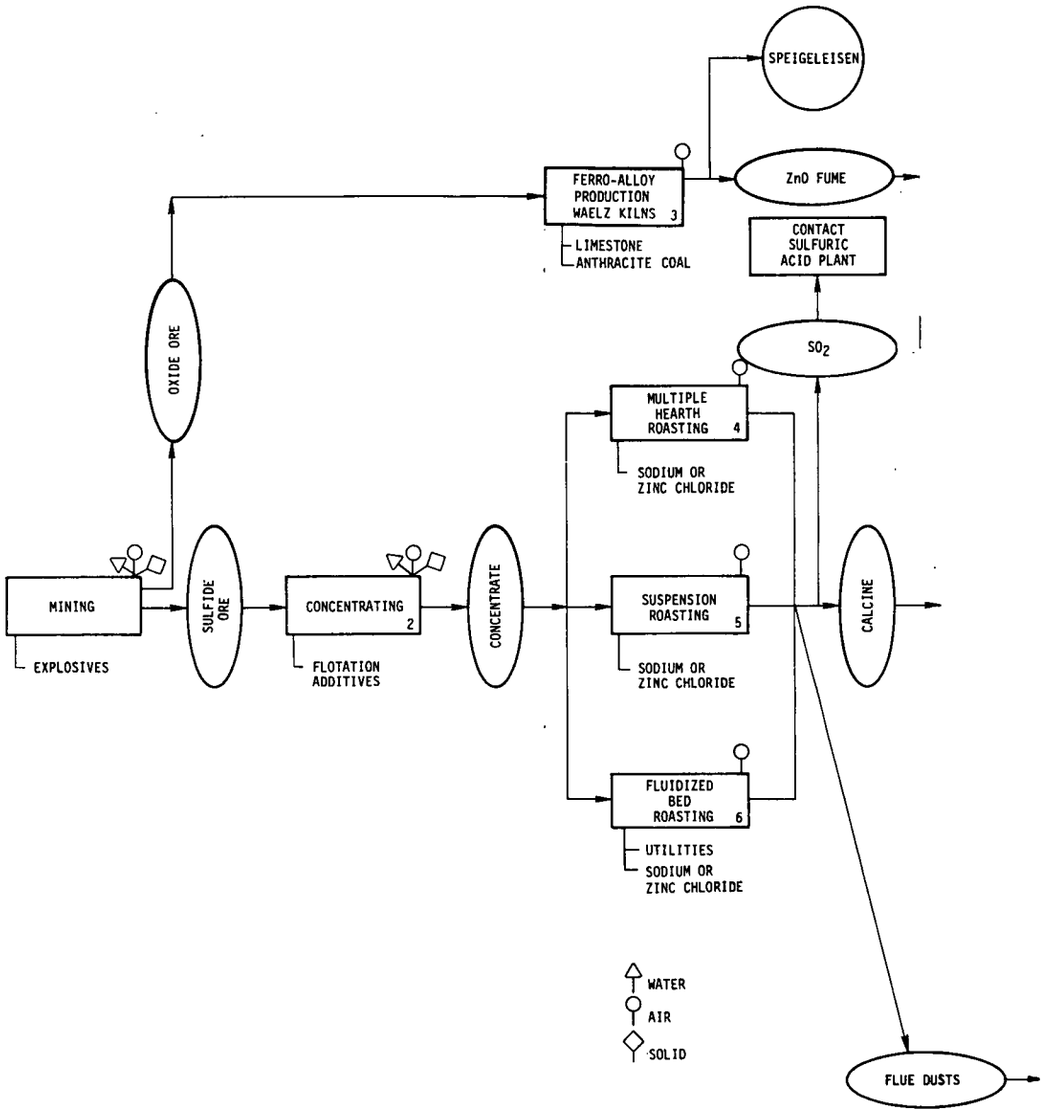

Figure 4-1. Zinc industry flow sheet.

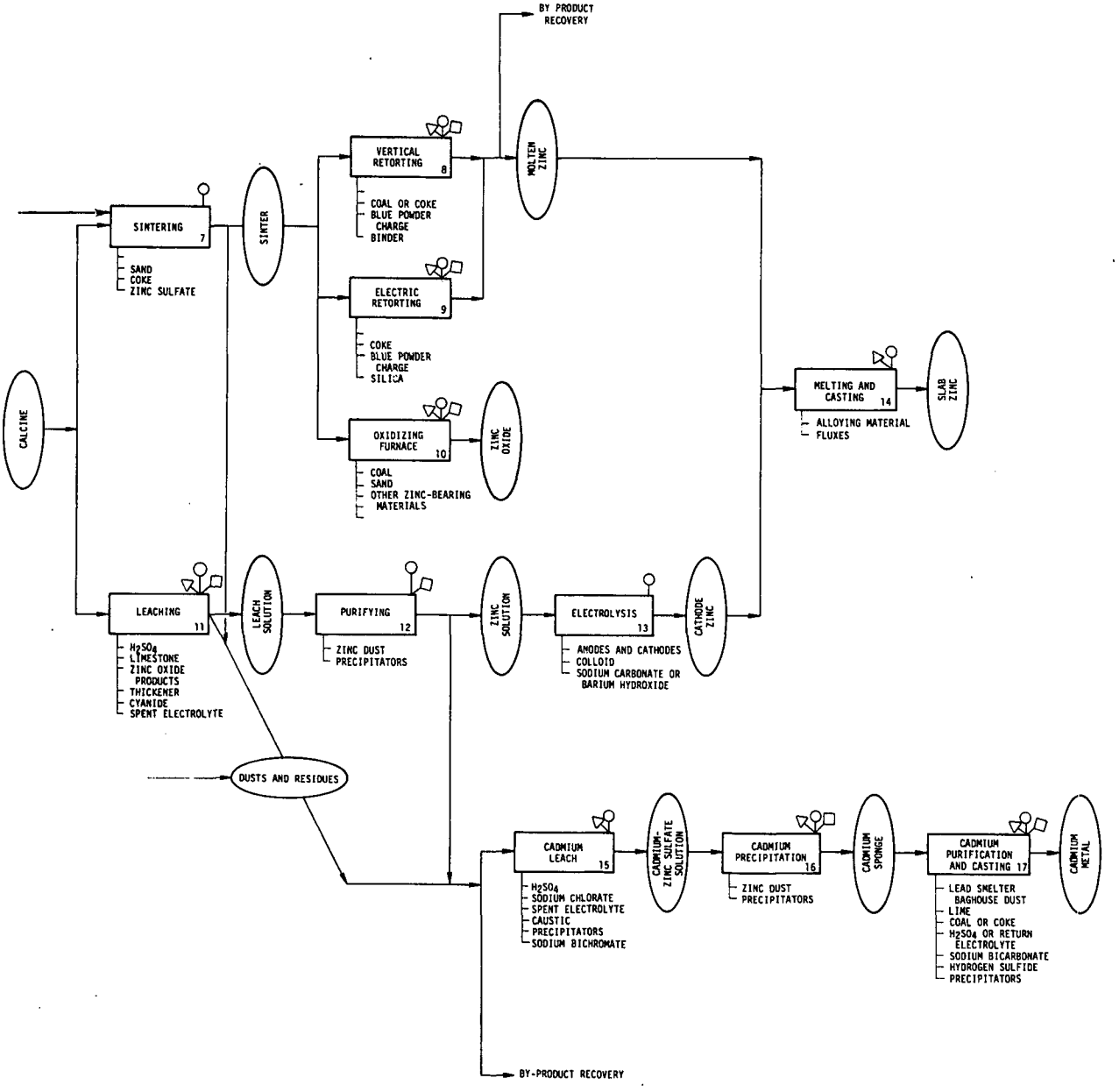

Figure 4-1. Zinc industry flow sheet.

INDUSTRY SEGMENT ANALYSIS

As with the copper and lead segments, the environmental impacts of the zinc mining and smelting industries have received considerable attention in recent years from both private and governmental organizations. This industry segment analysis examines each production operation, to define its industrial purpose and its potential and practice in affecting the quality of the environment. Each process is examined as follows:

1. Function
2. Input Materials
3. Operating Conditions
4. Utilities
5. Waste Streams
6. Control Technology
7. EPA Classification Code
8. References

The only processes included in this section are those that are now operating in the United States. Figure 4-1 is a flowsheet that shows these processes, their interrelationships, and their major waste streams.

Mining

1. Function - Mining involves excavation and treatment of zinc ore deposits. Most zinc is mined underground using open shrinkage, cut-and-fill, or square-set stoping methods. In underground mines, walls and pillars are usually left behind to support the overlying rock structure, unless the width of the ore body is such that it can be supported and the entire ore body extracted. A few mines, particularly in early stages of operation, use open pit methods, which closely resemble those used in copper mining.

Mining operations consist of drilling, blasting, and removing the broken rock. After removal from the mine, the ore is loaded onto trucks for transportation to concentrating facilities. Mining operations range in size from those handling several hundred metric tons of ore per day to complexes capable of processing about six thousand metric tons per day. Some large, single-level, open-stage operations utilize "trackless" mining techniques, with equipment mounted on crawler-type tread or pneumatic-tired vehicles. This equipment facilitates movement and increases speed of operations, thus increasing total output and reducing costs; with such equipment it is sometimes feasible to mine ore containing as little as 2 percent zinc.

2. Input Materials - Inputs to the mining process include the ore deposits and the explosives used to remove them.

3. Operating Conditions - Ores are mined at atmospheric conditions. Conditions depend upon type of mining, i.e., open pit or underground.

4. Utilities - Fuels and electricity are used for operating mining equipment and transporting ore to concentrating facilities. One estimate for electrical usage for mining ore in 1973 was 2.7×10^{11} kilocalories (1). With the 1973 mine production level of 434,000 metric tons (2), electrical usage was about 720 kilowatt-hours per metric ton of zinc moved. Unspecified amounts of water are pumped into mines for machinery and hydraulic backfill operations.

5. Waste Streams - Zinc ores typically contain 3 to 11 percent zinc (3); thus 10 to 40 tons of ore must be mined for every ton of zinc produced. Most of this ore is mined for other metals as well. Fugitive dust emissions are similar to those of other mining operations, amounting to about 0.1 kg per metric ton of zinc mined (4). Cadmium emissions also occur during the mining of zinc ore. Emissions due to wind loss from tailings are estimated at 0.1 kilogram per metric ton of ore mined (5). Total emissions of cadmium to the atmosphere were thus 240 metric tons for 1968 (5) and 220 metric tons for 1973 (6).

Mine waste water results from infiltration of ground water, water pumped into the mine for machines and hydraulic backfill operations, and infiltration of surface water. Quantities of effluent are not necessarily related to the quantity of ore mined. The water required to maintain operations may range from thousands of liters per day to 160 million liters per day. This water contains such impurities as blasting agents, fuel, oil, and

hydraulic fluid. Dissolved solids found in the wastewater are generally lead, zinc, and associated minerals (7).

Conditions compatible with solubilization of certain metals, particularly zinc, are associated with heavily fissured ore bodies. Although the minerals being recovered are sulfides, a fissured ore body allows oxidation of the ore, which increases the solubility of the minerals.

The major solid wastes from mining operations result from removal of rock to get to the ore. The discarded waste is of essentially the same composition as raw ore, with lower metallic content. No quantitative or qualitative estimate was found concerning these spoils.

6. Control Technology - Fugitive dusts from drilling, conveying, and crushing can be reduced by wetting and control systems (8).

Control of water from this process is described in Section 6, Water Management. In the zinc industry, mine water generated from natural drainage is reused in mining and milling operations whenever possible. Discharge may result because of an excess of precipitation, lack of a nearby milling facility, or inability to reuse all of the mine waste water at a particular mill.

Small quantities of water are usually needed in the zinc flotation process; mine water effluent is used at many facilities as mill process makeup water. The mine water may pass through the process first, or it may be conveyed to a tailings pond for later use with recycled process water. The practice of combining mine water with mill water can disturb the overall water balance unless the mill circuit is capable of handling the water volumes generated without a resulting discharge.

Acid mine water is neutralized by the addition of lime and limestone. Acid mine water containing solubilized metals may be effectively treated in the mill tailings pond. The water may be further treated by lime clarification and aeration.

The solid wastes from mining operations are disposed of in a spoil pile or pond. These wastes can be used as mine backfill.

7. EPA Souce Classification Code - None

8. References -

1. Dayton, S. The Quiet Revolution in the Wide World of Mineral Processing. Engineering and Mining Journal. June 1975.

2. Commodity Data Summaries 1976. U.S. Department of Interior. Bureau of Mines. Washington, D.C. 1976.

3. McMahon, A.D., et al. In 1973 Bureau of Mines Minerals Yearbook. U.S. Department of the Interior. U.S. Government Printing Office. 1973.

4. National Inventory of Sources and Emissions - Section V, Zinc. W.E. Doris and Associates. Report No. APTD - 1139. National Technical Information Service, U.S. Department of Commerce. Springfield, Virginia. May 1972.

5. W.E. Davis and Associates. National Inventory of Sources and Emissions - Cadmium, Nickel, and Asbestos - 1968. Cadmium, Section I. Report No. APTD - 1968. National Technical Information Service. Springfield, Virginia. February 1970.

6. Deane, G.L., et al. Cadmium: Control Strategy Analysis. GCA Corporation Report No. 6CA-TR-75-36-G. U.S. Environmental Protection Agency. Research Triangle Park, North Carolina. April 1976.

7. Development Document for Interim Final and Proposed Effluent Limitations Guidelines and New Source Performance Standards for the Ore Mining and Dressing Industry. Point Source Category Vol. 1. EPA 440/1-75/061. Effluent Guidelines Division Office of Water and Hazardous Materials, U.S. Environmental Protection Agency. Washington, D.C. October 1975.

8. An Investigation of the Best Systems of Emission Reduction for Quarrying and Plant Process Facilities in the Crushed and Broken Stone Industry. United States Environmental Protection Agency, Office of Air Quality Planning and Standards, Emission Standards and Engineering Division. Research Triangle Park, North Carolina. Draft. April 1976.

Concentrating

1. Function - Concentrating consists of separating the desirable mineral constituents in the ore from the unwanted impurities by various mechanical processes. The ore from mining must be concentrated because mined sphalerite is seldom pure enough to be reduced directly for zinc smelting.

The zinc-bearing ore is first crushed by standard jaw, gyratory, and cone crushers to a size based on an economic balance between the recoverable metal values and the cost of grinding (1). Size separation is accomplished by vibrating or trommel screens and classifiers. Heavy-medium cones, jigs, and tables separate the zinc minerals from a low specific-gravity gangue. Classification and recycling between stages reduces the material to a particle size appropriate for milling. The final milled product is typically 60 percent smaller than 325 mesh.

After being transported to large bins for blending and storing, the ore is pumped as an aqueous slurry to flotation cells, where it is conditioned by additives and separated by froth flotation to recover the zinc sulfide and sometimes lead or copper sulfides. In some cases, the ore is reconcentrated by mechanical separation based on specific gravity differences prior to froth flotation. Large mixers stir the solution, and the zinc-bearing minerals separate and float to the surface where they are skimmed off. Generally, zinc sulfide flotations are run at a basic pH (usually 8.5 to 11), and the slurry is periodically adjusted with hydrated lime, $Ca(OH)_2$ (1). After flotation, the underflow (tailings or gangue materials) is sent to a tailings pond for treatment.

Once separated, the metal concentrates are thickened in settling tanks and the slurry is fed to vacuum drum filters, which reduce the moisture content. Upon completion of the concentration process, the zinc content is about 55 to 60 percent. Thermal drying in direct-fired rotary dryers may further reduce the moisture content of the concentrates, which are then transported to a storage site. Concentrate enters the dryer with about 11 percent moisture and leaves with about 3 percent moisture (2).

In certain western ores, notably those from Idaho, the lead and zinc are too finely divided for satisfactory separation even by flotation. For such ores, final separation involves sulfuric acid leaching at an electrolytic zinc plant. Some foreign producers use the Imperial furnace to treat these ores, but is is not used at any U.S. zinc smelters. Treatment of such ores was the primary reason for development of electrolytic zinc recovery methods in North America.

The quantity of zinc concentrate produced is about 10 to 15 percent of the zinc ore by weight. A typical analysis would be 52 to 60 percent zinc, 30 to 33 percent sulfur, 4 to 11 percent iron, and lesser quantities of lead, cadmium, copper, and other elements (2). Table 4-8 lists some of these elements of ore concentrate.

TABLE 4-8. RANGE OF COMPOSITIONS OF ZINC CONCENTRATES (6,7,8)

Constituent	Percent, weight
Pb	0.85-2.4
Zn	49.0-53.6
Au	not iden.
Ag	not iden.
Cu	0.35
As	0.105-0.15
Sb	not iden.
Fe	5.5-13.0
Insolubles	3.4
CaO	not iden.
S	30.7-32.0
Bi	not iden.
Cd	0.24

Additional details regarding concentrating equipment and procedures are given in Section 2, Process No. 2. The concentrating techniques and equipment are similar to those used for copper ores.

2. Input Materials - The quantity of ore required per ton of zinc concentrate produced varies with the zinc content of the ore. A common range is 5 to 10 tons of ore per ton of zinc concentrate (1).

Hydrated lime is used to adjust the pH. Promoters or collectors are added to the zinc sulfide to provide a coating that repels water and encourages absorption of air. Frothers are added to produce a layer of foam on the top of the flotation machine, and depressants are added to stop unwanted minerals from floating. Table 4-9 lists commonly used reagents.

Additives are an estimated 1.9 kilogram of lime, 0.4 kilogram of copper sulfate, 0.04 kilogram of Z-5 xanthate, and 0.02 kilogram of pine oil per metric ton of concentrate (3).

3. Operating Conditions - Flotation machines are operated at ambient temperatures and pressures. Flotations are generally run at elevated pH values of 8.5 to 11 (1).

4. Utilities - Electrical energy is consumed during milling operations. One estimate for electrical usage in the milling of zinc ores in 1973 is 290 million killowatt-hours (4). At the 1973 mine production level of 434,000 metric tons (5), electrical usage was about 477 kilowatt-hours per metric ton of zinc produced.

The water requirement ranges from 330 to 1,100 cubic meters per metric ton of ore processed per day (1). Feed water for the mills is usually taken from available mine waters.

5. Waste Streams - It is estimated that 1 kilogram of particulate is emitted per metric ton of ore processed during crushing and grinding operations. The composition is that of the raw ore fed to the process. After water is added to form an ore-water slurry, particulate emissions are negligible. In plants that incorporate an ore drying operation following concentration, dust emissions occur as the hot air passes over the moving bed of concentrate. Operating factors affecting emissions are the process feed rate and moisture content.

Liquid waste streams from zinc mills vary in volume from 1000 to 16,000 cubic meters per day. In terms of volume of ore processed, liquid waste streams from milling operations range from 330 to 1,100 cubic meters per metric ton (1). Tailings slurry discharge is about 4 cubic meters per metric ton of ore processed.

The raw wastewater from a lead/zinc flotation mill consists principally of the water used in the flotation circuit, along with any housecleaning water. The waste streams consist of the tailings streams (usually the underflow of the zinc rougher flotation cell), the overflow from the concentrate thickeners, and the filtrate from concentrate dewatering.

TABLE 4-9. TYPICAL FLOTATION REAGENTS USED FOR ZINC CONCENTRATION UNITS (1)

Reagent	Purpose
Methyl isobutyl-carbinol	Frother
Propylene glycol methyl ether	Frother
Long-chain aliphatic alcohols	Frother
Pine oil	Frother
Potassium amyl xanthate	Collector
Sodium isopropol xanthate	Collector
Sodium ethyl xanthate	Collector
Dixanthogen	Collector
Isopropyl ethyl thionocarbonate	Collectors
Sodium diethyl-dithiophosphate	Collectors
Zinc sulfate	Zinc depressant
Sodium cyanide	Zinc depressant
Copper sulfate	Zinc activant
Sodium dichromate	Lead depressant
Sulfur dioxide	Lead depressant
Starch	Lead depressant
Lime	pH adjustment

The principal characteristics of the waste stream from mill operations are as follows:

(1) Solids loadings of 25 to 50 percent (tailings).

(2) Unseparated minerals associated with the tails.

(3) Fine particles of minerals, particularly if the thickener overflow is not recirculated.

(4) Excess flotation reagents not associated with the mineral concentrates.

(5) Any spills of reagents that occur in the mill.

It is very difficult analytically to detect the presence of excess flotation reagents, particularly those that are organic. The surfactant parameters may give some indication of the presence of organic reagents, but provide no definitive information.

A typical quantity of solid wastes is 0.9 to 1 metric ton per metric ton of ore milled. Based on a 25 to 50 percent solids loading in the liquid waste stream, solid wastes from flotation could range from 80 to 550 cubic meters per metric ton (1). The main component of the waste is dolomite.

Table 4-10 gives raw and treated waste characteristics of five mills. This summary does not include information for a mill using total recycle and one at which mill wastes are mixed with metal refining wastes in the tailings pond. Feed water for the mills is usually drawn from available mine waters; however, one mill uses water from a nearby lake. These data illustrate the wide variations caused by ore mineralogy, grinding practices, and reagents.

6. Control Technology - Particulate abatement equipment at the dryer can capture dust and recirculate it into a storage bin for further use. This can be accomplished with low-energy scrubbers and multicyclones. Cyclones, operating on a dry principle, could remove many of the large particles for reuse directly in the roaster without further processing. Particulates caught in the scrubbers must be dried before reuse in roasters or sintering plants.

Lime precipitation is often used for the removal of heavy metals from wastewater. This treatment yields reductions for several heavy metals including copper, zinc, iron, manganese, and cadmium.

Various techniques are employed to augment lime neutralization. Among these are the secondary settling ponds, clarifier tanks, or the addition of flocculating agents (such as polyelectrolytes) to enhance removal of solids and sludge before discharge. Readjustment of the pH after lime treatment can be accomplished either by addition of sulfuric acid or by recarbonation. Sulfide precipitation may be necessary for further removal of metals such as cadmium and mercury.

TABLE 4-10. RANGES OF CONSTITUENTS OF WASTEWATERS AND RAW WASTE LOADS FOR FIVE SELECTED MILLS (1)

Parameter	Range of concentration in wastewater mg/l		Range of raw waste load			
			Per unit ore milled, kg/1000 metric tons		Per unit concentrate produced, kg/1000 metric tons	
	lower limit	upper limit	lower limit	upper limit	lower limit	upper limit
pH[a]	7.9	8.8				
Alkalinity	26	609	410	1,600	1,450	10,200
Hardness	310	1,760	460	4,700	2,290	32,500
TSS	<2	108	7	285	30	2,000
TDS	670	2,834	940	8,500	4,800	50,900
COD	71.4	1,535	6	4,800	30	50,000
TOC	11	35	6.35	130	30	580
Oil and grease	0	8	5	21	30	130
MBAS surfactants	0.18	3.7	0.236	13	2.05	60.7
P	0.042	0.150	0.108	0.876	0.54	2.54
Ammonia	<0.05	14	0.064	26.4	0.32	185
Hg	<0.0001	0.1	<0.00013	0.0026	<0.00168	0.130
Pb	<0.1	1.9	<0.127	6.9	<0.900	32.2
Zn	0.12	0.46	0.089	17.2	0.62	86.0
Cu	<0.02	0.36	<0.026	0.158	<0.18	1.96
Cd	0.005	0.011	0.008	0.018	<0.18	8.85
Cr	<0.02	0.67	<0.026	1.77	<0.18	1.36
Mn	<0.02	0.08	<0.026	0.290	<0.45	10.0
Fe	0.05	0.53	0.064	1.16	0.012	0.198
Cyanide	<0.01	0.03	<0.013	0.109	0.091	0.509
Sulfate	295	1,825	130	4,800	1,260	33,700
Chloride	21	395	20	870	210	4,070
Fluoride	0.13	0.26	0.370	0.944	203	5.45

[a] Value in pH units.

Water separated from the concentrates is often recycled in the mill, but it may be pumped to the tailings pond, where primary separation of solids occurs. Usually, surface drainage from the area around the mill is also collected and sent to the tailings pond for treatment, as is process water from froth flotation.

Tailings pond water may be decanted after sufficient retention time. One alternative to discharge, which reduces the output of effluent, is reuse of the water in other facilities as either makeup water or process water. Usually, some treatment is required before reuse of this decanted water. Treatments include secondary settling, phosphate or lime addition, pH adjustment, flocculation, clarification, and filtration.

The most frequently used control technology is the use of a settling or sedimentation pond system consisting of primary tailings pond and secondary settling or "polishing" pond, with pH adjustment prior to discharge. Six lead and zinc ore processing facilities now use this technology. Effluent concentrations are limited to the following average values (in milligrams per liter): copper - 0.05, mercury - 0.001, lead - 0.02, and zinc - 0.5 (1).

Control of wastewater is further discussed in Section 6, Water Management, which presents data typical for most of the zinc industry.

Tailings from mine concentrator operations may present a serious water pollution problem if adequate precautions are not taken. Coarse tailings may be removed with a cyclone separator and pumped to the mine for backfilling (1). The most effective means of control is impoundment with isolation of disposal sites from surface flows. Techniques include the following (1):

(1) Construction of a clay or other type of liner beneath the planned waste disposal area to prevent infiltration of surface water (precipitation) or water contained in the waste into the groundwater system.

(2) Compaction of waste material to reduce infiltration.

(3) Maintenance of uniformly sized refuse to enhance good compaction (which may require additional crushing).

(4) Construction of a clay liner over the material to minimize infiltration. This is usually followed by placement of top soil and seeding to establish a vegetative cover for control of erosion and runoff.

(5) Excavation of diversion ditches surrounding the refuse disposal site to exclude surface runoff. These ditches can also be used to collect seepage from refuse piles, with subsequent treatment if necessary.

No data were found on the extent of application of these methods.

7. EPA Source Classification Code - None

8. References -

1. Development Document for Interim Final and Proposed Effluent Limitations Guidelines and New Source Performance Standards for the Ore Mining and Dressing Industry. Point Source Category Vol. 1. Publication EPA-440/1-75/061. Effluent Guidelines Division Office of Water and Hazardous Materials, U.S. Environmental Protection Agency. Washington, D.C. October 1975.

2. Field Surveillance and Enforcement Guide for Primary Metallurgical Industries. EPA-450/3-73-002. Office of Air and Water Programs, U.S. Environmental Protection Agency. Research Triangle Park, North Carolina. December 1973. pp. 269-309.

3. Denver Equipment Company. Mineral Processing Flowsheets. Denver, Colorado. 1962.

4. Dayton, S. The Quiet Revolution in the Wide World of Mineral Processing. Engineering and Mining Journal. June 1975.

5. Commodity Data Summaries 1976. U.S. Department of the Interior, Bureau of Mines. Washington, D.C. 1976.

6. Water Pollution Control in the Primary Nonferrous - Metals Industries. Volume 1, Copper, Zinc, and Lead Industries. EPA-R2-73-247a. Office of Research and Development, U.S. Environmental Protection Agency. Washington, D.C. September 1973.

7. Burgess, Robert P., Jr., and Donald H. Sargent. Technical and Microeconomic Analysis of Arsenic and Its Compounds. EPA-560/5-76-016. Office of Toxic Substances. U.S. Environmental Protection Agency. Washington, D.C. April 12, 1976.

8. Katari, V., et al. Trace Pollutant Emissions from the Processing of Metallic Ores. EPA-650/2-74-115. U.S. Environmental Protection Agency, Office of Research and Development. Research Triangle Park, North Carolina. October 1974.

Ferroalloy Production

1. Function - One U.S. zinc smelter recovers a ferro-manganese by-product from zinc oxide ore by means of reduction, vaporization, and oxidation in Waelz kilns. The ore, from a New Jersey mine, is not amenable to flotation. The zinc oxide fume produced in the kilns is collected and sintered in the same manner as roasted sulfide concentrates.

The Waelz kilns in use are rotary kilns similar to those used in the cement industry. Their sizes range from 3.0 meters in diameter by 42.7 meters long to 3.7 meters in diameter by 48.8 meters long. Gas flow is countercurrent to the solids flow, with the zinc oxide fume and kiln gases withdrawn at the feed end. Automatic 10-compartment dust tube collectors remove zinc oxide from the gas streams, which have been previously cooled by dilution and radiation loss. Solid residues from the kiln contain 20 to 24 percent iron and approximately 10 percent manganese; they are processed in open-arc electric furnaces to produce a nominal 20 percent manganese iron (Spiegeleisen) (1).

2. Input Materials - The charge to the Waelz kilns consists of the oxide ores which are mixed with anthracite coal to raise the carbon content and limestone to stiffen the charge. Feed to the kilns ranges between 9 and 15 metric tons per hour (1).

3. Operating Conditions - Waelz kilns operate at atmospheric pressures (2). Operating temperatures are not known.

4. Utilities - Heat generated by the oxidation reactions is usually sufficient to sustain reduction. Additional heat if required for reduction of the zinc can be supplied by the combustion of coal, oil, natural gas, or electric furnace gas. No information is available as to the quantities of additional heat that may be supplied by combustion of fuel.

5. Waste Streams - Unknown quantities of combustion products are emitted from the kilns and vented to the atmosphere.

There are no liquid or solid wastes from the process.

6. Control Technology - There are no known environmental controls on the Waelz kilns used for ferroalloy production.

7. EPA Source Classification Code - None

8. References -

1. The New Jersey Zinc Company. Manufacturing Operations. Palmerton, Pennsylvania.

2. Schlecten, A.W. and A. Paul Thompson. Zinc and Zinc Alloys. In: Kirk-Othmer. Encyclopedia of Chemical Technology. Interscience Division of John Wiley and Sons, Inc. New York. 1967.

Multiple-Hearth Roasting

1. Function - Multiple-hearth roasting is a high-temperature process that removes sulfur from the concentrate and converts zinc to an impure zinc oxide called calcine. Roasting may also be accomplished by suspension (Process No. 5) or fluidized-bed (Process No. 6) units. In a multiple-hearth roaster, the concentrates drop from hearth to hearth. As much as 20 percent of the cadmium present in the zinc concentrate may be vaporized (1). Any mercury present is volatilized and enters the gas stream. Multiple-hearth roasters are the oldest type of roaster in use in the United States.

At present, only two domestic primary zinc smelters use multiple-hearth roasters. At one of these plants, the multipe-hearth roaster is used in conjunction with fluidized-bed roasters. The deleaded product, termed "partially desulfurized concentrate," typically contains about 22 percent sulfur and is used as feed to the fluidized-bed roasters. Mercury is recovered from the flue dusts captured in the electrostatic precipitators used to clean the gas stream from these roasters.

In roasting, if enough sulfur is originally present as sulfide, the operation becomes autogenous. For pyrometallurgical refining, zinc sulfate must be removed. The following reactions occur during roasting:

$$2ZnS + 3O_2 \rightarrow 2ZnO + 2SO_2$$

$$2SO_2 + O_2 \rightarrow 2SO_3$$

$$ZnO + SO_3 \rightarrow ZnSO_4$$

In pyrometallurgical reduction only the oxide state is desired, whereas in electrolytic reduction, small amounts of the sulfate state are acceptable (3).

Elimination of the remaining small percentages of sulfur requires a long residence time. Hence a multiple-hearth-type roaster that eliminates all but 6 to 8 percent sulfur from up to 350 tons of copper concentrates per day can roast only about 50 to 60 tons of zinc concentrate per day to about 2 percent sulfur.

Because concentrations of SO_2 produced during roasting are high enough to allow recovery of sulfuric acid in an acid plant, this process has become a normal part of zinc production.

The roaster consists of a brick-lined cylindrical steel column with 9 or more hearths. A motor-driven central shaft has two rabble arms attached

for each hearth, as well as cooling pipes. The concentrates enter at the top of the roaster and are first dried in an upper hearth. The central shaft rotates slowly, raking the concentrates over the hearth with the rabble arms, gradually moving them to the center and a drop hole to the next hearth. They move across this second hearth to a slot near the outer edge, where they drop to the next hearth. The concentrates continue down through the roaster in this spiral fashion and are discharged at the bottom. Additional fuel must be added to maintain combustion.

The low production rates are a major disadvantage of multiple-hearth roasting. However, since less dust is carried away in the gas stream, more volatile sulfides such as cadmium are removed preferentially. This is helpful when cadmium is to be recovered from the flue dust, since there is less zinc dust contamination (4).

Total residual sulfur in the calcine produced in multiple-hearth roasters is 2.4 percent; 0.5 to 1.0 percent is present as sulfide and the balance as sulfate (3).

Feed capacities for multiple-hearth roasters average 180 metric tons per day.

2. Input Materials - Zinc concentrate is the input material for multiple-hearth roasters. Approximately 2.4 tons of pure ZnS is required to produce 1 ton of pure ZnO. In practice, the quantity of raw materials required to produce one unit of calcine varies depending on impurities in the concentrate, efficiency of the dust-collecting devices on the roaster, and the type of roaster used.

Sodium or zinc chloride may be added to combine with cadmium dust in the roaster and facilitate removal of cadmium as a by-product after sintering. Specific quantities have not been reported.

3. Operating Conditions - Multiple-hearth roasters are unpressurized. Average operating temperature is about 690°C (3); the lower hearths (sixth through tenth from the top) are maintained at 950° to 980°C (2). Operating time depends upon the type of roaster, composition of concentrate, and amount of sulfur removal required.

4. Utilities - The reaction converting ZnS to ZnO is exothermic and is self-sustaining after ignition. Gas, coal, or oil must be added initially to bring the charge up to reaction temperature. About 280,000 kilocalories per metric ton of ore are required for ignition. The primary fuel is natural gas. In some multiple-hearth furnaces, when concentrations of less than 1.0 percent of sulfide sulfur are required, about 1.1 million kilocalories are required per metric ton of feed (5). Some additional fuel is added to the lower hearths to reduce the zinc sulfide content to as low as 0.5 to 1.0 percent.

Cooling water and air are also used to cool the furnace shaft. Electricity powers the rabble arms.

5. Waste Streams - In a zinc smelter the roasting process is typically responsible for more than 90 percent of the potential SO_2 emissions; 93 to 97 percent of the sulfur in the feed is emitted as sulfur oxides. Concentrations of SO_2 in the off-gas vary with the type of roaster operation. Off-gases contain up to 6 to 7 percent sulfur, depending on the sulfur content of the feed. The volume of off-gases ranges from 140 to 170 cubic meters per minute (6) for furnaces currently in use (approximately 180 metric tons per day). Typical SO_2 concentrations range from 4.5 to 6.5 percent (3). Oxygen, nitrogen, carbon dioxide, and water vapor are other components of the gas.

Particulate matter is also emitted. The amount and composition vary depending on such operating conditions as air flow rate, particle size distribution, and equipment configuration. Particulate emissions consist of fumes and dusts composed of the zinc concentrate elements in various combinations. One plant has reported the following compositions of flue dusts from multiple-hearth, suspension, and fluid bed roasters: zinc, 54.0 percent; lead, 1.4 percent; sulfur, 7.0 percent; cadmium, 0.41 percent; iron, 7.0 percent; copper, 0.40 percent; manganese, 0.21 percent; tin, 0.01 percent; and mercury, 0.03 percent (2). Typical particulate emissions in the off-gas range from 5 to 15 percent of the feed (5). Composition of the distilled metal fumes, which constitute an appreciable portion of the waste gas particulate carryover, depends primarily on the concentrate composition and operating conditions. The single zinc smelter using multiple-hearth roasters, which also uses suspension and fluidized-bed roasters, recovers mercury eliminated during roasting from the gas purification stream (2). At that smelter, the roasted material is treated by flotation to separate a fraction of waste rock prior to further processing.

Information on liquid and solid wastes is not available at this time.

6. Control Technology - Gases leaving the roaster are routed directly to "hot" Cottrells, operating at 200° to 220°C, and then to the acid plant (2).

7. EPA Source Classification Code - Roasting/multiple-hearth 3-03-030-02.

8. References -

1. Development Document for Interim Final Effluent Limitations Guidelines and Proposed New Source Performance Standards for the Zinc Segment of the Nonferrous Metals Manufacturing Point Source Category. EPA-440/1-75/032. Effluent Guidelines Division Office of Water and Hazardous Materials. U.S. Environmental Protection Agency. Washington, D.C. November 1974.

2. Lund, R.E., et al. Josephtown Electrothermic Zinc Smelter of St. Joe Minerals Corporation. AIME Symposium on Lead and Zinc, Vol. II. 1970.

3. Background Information for New Source Performance Standards: Primary Copper, Lead, and Zinc Smelters. EPA-450/2-74-002a. Office of Air and Waste Management. U.S. Environmental Protection Agency. Research Triangle Park, North Carolina. October 1974.

4. Schlechter, A.W., and A. Paul Thompson. Zinc and Zinc Alloys. In: Kirk-Othmer. Encyclopedia of Chemical Technology. Interscience Division of John Wiley and Sons, Inc. New York. 1967.

5. Fejer, M.E., and D.H. Larson. Study of Industrial Uses of Energy Relative to Environmental Effects. EPA-450/3-74-044. U.S. Environmental Protection Agency. Research Triangle Park, North Carolina. July 1974.

6. Field Surveillance and Enforcement Guide for Primary Metallurgical Industries. EPA-450/3-73-002. Office of Air and Water Programs, U.S. Environmental Protection Agency. Research Triangle Park, North Carolina. December 1973.

Suspension Roasting

1. Function - Suspension, or flash, roasting is a process for rapid removal of sulfur and conversion of zinc to calcine by allowing the concentrates to fall through a heated oxidizing atmosphere or blowing them into a combustion chamber. Roasting in suspension promotes better heat transfer than multiple-hearth roasting and thereby increases reaction rates for desulfurization. The chemical reactions occurring in the two processes are the same, and the SO_2 stream produced during conversion of the zinc sulfides to calcine is strong enough for sulfuric acid production. Removal of mercury and cadmium is also similar.

Suspension roasting is similar to the burning of pulverized coal, in that finely ground concentrates are suspended in a stream of air and sprayed into a hot combustion chamber where they undergo instantaneous desulfurization. In practice, a stream of hot air passes through the finely ground concentrate to temporarily suspend the particles. The reaction usually proceeds without the addition of fuel unless the sulfide content of the ore is too low.

The roaster consists of a refractory-lined cylindrical steel shell with a large combustion space at the top and two to four hearths in the lower portion, similar to those of a multiple hearth furnace. Because the feed must be carefully sized, additional grinding may be needed for proper preparation. In more recent models of flash furnaces, concentrate is introduced into the lower one or two hearths to dry before final grinding in an auxiliary ball mill and introduction into the combustion chamber.

About 40 percent of the roasted product settles out on a collecting hearth at the bottom of the combustion chamber. This coarser material is likely to contain the most sulfur, so it is further desulfurized by being rabbled across this hearth and another hearth immediately below before being discharged from the roaster. Particulate collected in ducts and control devices can be fed to these hearths to achieve further oxidation and sulfate decomposition or to obtain a more homogeneous product (1).

The remaining 60 percent of the product leaves the furnace with the gas stream, passing first through a waste heat boiler and then to cyclones and an electrostatic precipitator, where it is recovered. About 20 percent of the suspended dust drops out in the boiler; the cyclones and precipitator remove about 99.5 percent of the remainder (1).

Total residual sulfur in the calcine is 2.6 percent, with 0.1 to 5.0 percent as sulfide and the balance as sulfate (2).

Feed capacities of older suspension roasters are about 90 metric tons per day, whereas newer roasters can handle about 320 metric tons of concentrate per day (1).

2. Input Materials - Zinc concentrate is the input material for suspension roasters. Sodium or zinc chloride may be added to facilitate later removal of cadmium. Specific quantities for these inputs are not available.

3. Operating Conditions - Suspension roasters are unpressurized and operate at an average temperature of 980°C (1). Off-gases exit the roaster at about 1000°C (3). Operating times vary, depending upon the same factors as in multiple-hearth roasting.

4. Utilities - Natural gas, oil, or coal is used to bring the roaster feed to ignition, after which exothermic oxidation of the sulfur maintains operating temperatures. About 280,000 kilocalories per metric ton of ore are required for ignition (4). Air is also added to the suspension roaster. Water is supplied to the waste heat boiler system, and relatively small amounts of electricity are required for fans, pumps, and rabble arms.

5. Waste Streams - The SO_2 concentration in the off-gas from suspension roasting is higher than that in multiple-hearth processes, averaging 10 to 13 percent (5). It also contains oxygen, nitrogen, carbon dioxide, and water vapor. The higher SO_2 content increases the efficiency of sulfuric acid production. Emission of particulates depends on operating conditions, averaging about 6 percent of the feed. These emissions consist of dust and metal fumes, depending on the concentrate composition and operating conditions. The volume of off-gases ranges from 280 to 420 cubic meters per minute (5).

There are no process water or solid wastes. There is a boiler blowdown from the waste heat boiler. Solids are recycled to recover by-product metals.

6. Control Technology - The SO_2 stream is concentrated enough to allow sulfuric acid production, discussed in detail in Section 2, Process No. 14. The roaster off-gases are cooled to about 400°C by heat transfer with waste heat boilers (3). The gas is then typically diluted with air and humidified with water sprays before cleaning in an ESP. After conditioning, gas volume is 475 to 700 cubic meters per minute, and the SO_2 concentration is 6 to 8 percent (6).

7. EPA Source Classification Code - None

8. References -

1. Schlechten, A.W., and A. Paul Thompson. Zinc and Zinc Alloys. In: Kirk-Othmer. Encyclopedia of Chemical Technology. Interscience Division of John Wiley and Sons, Inc. New York. 1967.

2. Background Information for New Source Performance Standards: Primary Copper, Lead, and Zinc Smelters. EPA-450/2-74-002a. Office of Air and Waste Management, U.S. Environmental Protection Agency. Research Triangle Park, North Carolina. October 1974.

3. Development Document for Interim Final Effluent Limitations Guidelines and Proposed New Source Performance Standards for the Zinc Segment of the Nonferrous Metals Manufacturing Point Source Category. EPA-440/1-75/032. Effluent Guidelines Division Office of Water and Hazardous Materials. U.S. Environmental Protection Agency. Washington, D.C. November 1974.

4. Study of Industrial Uses of Energy Relative to Environmental Effects. EPA-450/3-74-044. U.S. Environmental Protection Agency. Research Triangle Park, North Carolina. July 1974.

5. Field Surveillance and Enforcement Guide for Primary Metallurgical Industries. EPA-450/3-73-002. Office of Air and Water Programs, U.S. Environmental Protection Agency. Research Triangle Park, North Carolina. December 1973.

6. Jones, H.R. Pollution Control in The Nonferrous Metals Industry. Noyes Data Corporation. Park Ridge, New Jersey. 1972.

Fluidized-Bed Roasting

1. Function - The fluidized-bed roaster is the newest method for removing sulfur and converting zinc to calcine. In this roaster, finely ground sulfide concentrates are suspended and oxidized in a bed supported on an air column. As in the suspension roaster, the reaction rates for desulfurization are more rapid than in the older multiple-hearth processes. The chemistry of this process is the same as that in other roasters. This process also produces enough SO_2 for manufacture of sulfuric acid. Removal of mercury and cadmium is similar to removal of other wastes.

The fluidized-bed roaster was originally designed for calcining arsenopyrite gold ores; several North American zinc smelters have adopted it in different forms for use in pyrometallurgical and electrolytic processes. Designs differ primarily in whether the roasters are charged with a wet slurry or a dry charge. One variation is fluid column roasting, which was developed in this country by the New Jersey Zinc Company after being used abroad. In this process, feed to the roasters is pelletized. The calcined product is also pelletized, eliminating the need for further agglomeration by sintering. Fluid column roasting operates at slightly higher temperatures than fluidized-bed.

In the fluidized-bed process, no additional fuel is required after ignition has been achieved. Operation of the system is continuous. The feed enters the furnace and becomes fluidized, or suspended, in a bed supported on an air column. Temperature control is achieved manually or automatically, via water injection. Relatively low, uniform operating temperatures appear to lessen the formation of ferrite. The temperatures in the roaster are high enough to warrant the use of waste heat boilers to cool the off-gases.

The sulfur content of the charge is reduced from about 32 percent to 0.3 percent. Efficiency of the operation is maximum when 20 to 30 percent excess air is supplied over stoichiometric requirements for oxidation of both sulfur and metals of the charge (1).

Dust carryover into the dust collecting system is somewhat less than in flash roasting. Particulates emitted average 50 to 85 percent for fluidized-bed and only 17 to 18 percent for fluid column (2). Amounts vary with the feed rate (and consequently with the air rate), and with the size of the material being roasted.

The SO_2 content of roaster gas is reported to be 7 to 12 percent. If higher, it is diluted to about 7 percent before reaching the contact acid plant. The theoretical maximum SO_2 concentration achievable is 14.6 percent when roasting 100-percent zinc sulfide concentrates to completion, unless the air supply is enriched with oxygen (1).

Although the preferred method of regulating temperature within the bed is by water injection with automatic thermocouple-operated control, water

injection and slurry feeding can be eliminated when it is desirable to minimize the water content of the gas.

The major advantage of the fluidization roaster is its ability to process higher tonnages per furnace per unit time, because of the increased reaction rates for desulfurization. Fewer man-hours are required. Also, like the suspension roaster, the fluidized-bed roaster can produce a calcine with lower total sulfur content than the multiple-hearth processes; the exact percentage elimination of sulfur during roasting is a function of the initial sulfur content of the concentrate.

Total residual sulfur is 2.6 percent, with 0.1 percent as sulfide and the balance as sulfate (3).

Feed capacities can range up to 320 metric tons of concentrate per day (3).

2. Input Materials - Zinc concentrate is the primary input material for fluidized-bed roasting. As with other processes, sodium or zinc chloride may be added to combine with cadmium dust, facilitating the later removal of cadmium as a by-product. The feed is usually finely ground at one plant to 90 percent minus 0.044 millimeter (4). However, in some modifications, the feed is pelletized to provide longer retention time in the roaster (5).

3. Operating Conditions - Fluidized-bed roasters operate under a pressure slightly lower than atmospheric through as much of the system as possible. Operating temperatures average 1000°C. The temperature in fluid column roasters is 1050°C. Operating times are variable, depending upon the same factors as in other roasting processes.

4. Utilities - Natural gas, oil, or coal is used to bring the roaster feed up to reaction temperatures, after which exothermic oxidation of the sulfur maintains the temperature and operation is continuous. About 280,000 kilocalories per metric ton of ore is required for ignition (6). Cooling water is added, as well as low-pressure air (19 to 21 kg/cm^2) which is introduced into the windbox for combustion and fluidization of the mix.

5. Waste Streams - Typical SO_2 concentrations in the off-gas from fluidized-bed roasters range from 7 to 12 percent, although the higher figure is more common. Fluid column roasters average 11 to 12 percent. Exit gases also contain oxygen, nitrogen, carbon dioxide, and water vapor. The volume of off-gas produced ranges from 170 to 280 cubic meters per minute (5). Temperatures are approximately 950°C.

As with the other processes, the amount and composition of particulates and metal fumes depend on the concentrate composition and operating conditions.

As with other roasting processes, solids are recycled to recover by-product metals and there are no solid or process-water wastes.

6. Control Technology - Emission controls are the same as for the flash roasting process. The SO_2 stream is used for sulfuric acid production. Since SO_2 control systems normally require clean gas streams, particulates are captured by cyclones and ESP's before the gas stream enters the acid plant and thus present no air pollution problems. Waste heat boilers cool the gases to 400°C.

In one operation, roasting 127 metric tons of dry concentrates per day, 30 percent of the calcine left the roaster via the overflow pipe, 23 percent was deposited in the waste heat boiler, 44 percent was captured by the cyclones, and 3 percent entered the hot Cottrell electrostatic precipitator with the flue gases (1). Flue dusts are not recirculated to the reactor, being sufficiently low in sulfide sulfur. Roasters with pelletized feed yield about 80 percent to the overflow and 20 percent carry-over as dust.

7. EPA Source Classification Code - None

8. References -

1. Schlechten, A. W., and A. Paul Thompson. Zinc and Zinc Alloys. In: Kirk-Othmer. Encylcopedia of Chemical Technology. Interscience Division of John Wiley and Sons, Inc. New York. 1967.

2. Field Surveillance and Enforcement Guide for Primary Metallurgical Industries. EPA-450/3-73-002. Office of Air and Water Programs, U.S. Environmental Protection Agency. Research Triangle Park, North Carolina. December 1973.

3. Background Information for New Source Performance Standards: Primary Copper, Lead, and Zinc Smelters. EPA-450/2-74-002a. Office of Air and Waste Management, U.S. Environmental Protection Agency. Research Triangle Park, North Carolina. October 1974.

4. Development Document for Interim Final Effluent Limitations Guidelines and Proposed New Source Performance Standards for the Zinc Segment of the Nonferrous Metals Manufacturing Point Source Category. Battelle Columbus Laboratories. EPA Contract Environmental Protection Agency. Research Triangle Park, North Carolina. December 1973.

5. Van Den Neste, E. Metallurgie-Hoboken-Overpelt's Zinc Electrowinning Plant. CIM Bulletin. Sixth Annual Hydrometallurgical Meeting. 1977.

6. Study of Industrial Uses of Energy Relative to Environmental Effects. EPA-450/3-74-044. U.S. Environmental Protection Agency. Research Triangle Park, North Carolina. July 1974.

Sintering

1. Function - Sintering has two purposes: first, to volatilize lead and cadmium impurities and discharge them into the off-gas stream where they can be captured; and second, to agglomerate the charge into a hard, permeable mass suitable for feed to a pyrometallurgical reduction system.

Dwight-Lloyd-type sinter machines are typically used in the zinc industry. These are downdraft units in which grated pallets are joined to form a continuous conveyor system. The feed is normally a mixture of calcine or concentrates, recycled ground sinter, and the required amount of carbonaceous fuel, which is pelletized and sized to assure a uniform, permeable bed for sintering before it is fed to the machines and ignited. Different smelting methods demand different properties of the sintered feed. Purity of the final zinc product dictates the type of sinter needed.

The feed is dumped on one end of a moving conveyor and is ignited as it enters the natural gas fired ignition box. Combustion is sustained by supplying air to the pellets. Temperature control is achieved by limiting the coke and coal content and sulfur content of the sinter mix. Once oxidation is started, it becomes self-sustaining. Air flow regulation provides additional temperature control. A rotating scalper shaves off the top layer of the sinter bed just before the discharge end of the machine. This top layer is the sinter product, with composition at one plant as shown in Table 4-11. Estimates are that 80 to 90 percent of the cadmium and 70 to 80 percent of the lead are removed from the sinter feed (2). Dust collected from this circuit is greatly enriched in these impurities, and by recycling, levels are built up high enough in the flue dust to permit economic recovery of cadmium. The lower portion of the bed, which was not removed by the scalper, is discharged to a set of crushers. Coarser material may be separated on a vibrating screen. Oversized particles are returned to the sinter machine, while undersized material is incorporated with the feed mix. Usually 5 to 10 percent of the total feed appears as dust in the gas that is discharged (2). These dusts become the input material to the cadmium recovery process.

Structural strength of the sinter must be considered, especially in vertical reduction furnaces, since it must be able to support a great amount of confining pressure from the overburdening charge. Mechanical collapse is prevented by close chemical control of the nonvolatile ingredients and addition of silica to increase hardness and strength of the sinter mass. In horizontal-reduction-type retorts, no longer in use in this county, a soft, friable sinter was usually desirable. Structural strength was not needed because of the lack of heavy overburdening pressures. Cadmium content of the dust is usually 1 percent, allowing profitable cadmium recovery.

A process known as "sinter slicing" may be utilized in Dwight-Lloyd machines where higher grades of zinc are sought or recovery of impurities is profitable. The process is based on the fact that sintering or ignition is not homogenous throughout the charge, but migrates downward, eventually resulting in concentration of lead and cadmium sulfides at the bottom of the

TABLE 4-11. PRODUCT SINTER COMPOSITION (3)
(percent weight)

	Zn	Pb	Fe	Cd	SiO_2	S	Other dusts
Prime western	55.5	0.33	7.9	0.017	9.4	0.15	5-10
Intermediate	57.1	0.037	8.9	0.015	8.8	0.15	5-10
High-grade soft	63.6	0.005	6.8	0.012	5.2	0.36	5-10
High-grade hard	58.6	0.006	7.9	0.006	8.9	0.10	5-10

sinter cake. The finished sinter is sliced off for further refining in zinc-reduction retorts. The lower section of the sinter cake, with its high cadmium content, passes on to the discharge end of the machine. After crushing it is returned to the charge.

Dust collected in a baghouse still contains incompletely oxidized materials such as submicron sized particles of cadmium metal. Temperatures are controlled by CO gas burners and tempering air. The burned dust usually contains 10 to 20 percent cadmium, 12 to 15 percent zinc, and 35 to 45 percent or more lead (4). The dust is sent to a lead smelter for further cadmium concentration and then to an electrolytic plant for recovery of pure cadmium.

In sintering preroasted charges, it is reported that substitution of fluosolid calcines for those made by older types of roasters has meant handling a more finely divided charge. Such a charge consists of about 2.8-percent sulfur, of which about 2.4 percent is sulfate. These calcines are reported to sinter very rapidly when mixed with 4 to 5 percent fine coal. The product averages approximately 0.3 percent sulfur and 0.05-percent cadmium (5).

In one pyrometallurgical zinc plant, a briquetting step is added in preparing the charge for reduction. The sinter is ground, then mixed with pulverized coal, clay, moisture, and a binder. The mixture is pressed into small briquettes (about 0.7 kg) which are fed into a step-grade autogenous coking furnace. The briquettes attain a strong structure which resists disintegration as well as keeping the reductant and zinc oxide in close contact. Heat is generated by burning volatile constituents of the charge produced inside the furnace (6).

2. Input Materials - Specific quantities of input materials to a sinter machine are dependent on properties of the concentrate and the type of reduction (i.e. retort or electric). The sinter mix typically contains calcine, recycled sinter, coke or oil, and sand or other inert ingredients. One plant has reported using 22 kilograms of sand and 80 kilograms of coke breeze (not including carbon in furnace residue and bag filter dust) per metric ton of sinter produced (6). Moisture is added when the constituents are mixed, although where available, zinc sulfate solutions from in-plant leaching operations are used to moisten the feed for pelletizing, since this conserves water and enhances zinc recovery.

In typical zinc sintering operations, charging capacities range from 220 to 550 metric tons per day; from 35 to 80 percent of the new feed is recycled (7).

3. Operating Conditions - Typical operating parameters for zinc sintering are 1040°C temperature and atmospheric pressure. The wind box fan operates at a high negative pressure required to pull combustion air through the bed.

4. Utilities - The sinter mix usually contains 4 to 5 percent coke or coal to supply enough heat for sintering (3). Natural gas is used to ignite the mix. Electrical energy is required for operating the sinter machine. Fuel consumption has been estimated to be about 280,000 kilocalories per metric

ton of concentrate processed (8), although one plant reported use of 51,000 kilocalories per metric ton of sinter produced. Water (or zinc sulfate solution, if available) is added to facilitate pelletizing. Air is supplied to maintain combustion (6).

5. Waste Streams - The sintering operation is a source of air pollutants in the form of particulates and SO_2. The SO_2 concentration in off-gas from the sinter machine is very low, 0.1 to 2.4 percent by volume, which represents only 1 to 5 percent of the sulfur originally present in the feed (3). When zinc calcines are sintered, sulfur emissions from a sinter machine are primarily determined by the sulfur content of the input calcine, although some emissions result from the zinc sulfate liquor added to the sinter mix. Typically, the resulting weak off-gas stream contains approximately 1000 ppm SO_2; the concentration, however, can range from 400 to 3000 ppm SO_2, depending upon the total sulfur content of the feed stock (7).

All of the particulate matter is less than 10 microns. Solids loadings range from 9 to 100 grams per cubic meter (9). Emissions consist of dusts and metallic fumes of a composition similar to that of the calcine. Typical chemical composition of particulates is 5 to 25 percent zinc, 30 to 55 percent lead, 2 to 15 percent cadmium, and 8 to 13 percent sulfur (9). Other constituents include copper, arsenic, antimony, bismuth, selenium, tellurium, and tin. Cadmium and lead contents are especially high because about 90 percent of the cadmium and 70 to 80 percent of the lead is eliminated in the sinter machine. The fumes condense and are collected with the dust. An analysis of particulate emissions from a sinter machine is presented in Table 4-12.

In the briquetting step used at one plant, the coker combustion products are released through an uncontrolled stack and contain sizable quantities of metallic fume (10). Data on particulate emissions from this process are presented in Table 4-13.

Gas rates vary widely. With a calcined feed, exhaust gas rates vary from 42 to 72 cubic meters per square meter of grate. The gas rate with a concentrate feed is 5.4 to 6.5 cubic meters per square meter (9). Temperature of combined exit sinter gases varies from 160°C to 380°C in different plants (9). In addition to sulfur oxides, the gases contain air, water vapor, carbon dioxide, and traces of other gases.

The sinter process includes no sources of process liquid or solid wastes. Water that is added to the mix is vaporized and emitted through the stack, while all solids left unsintered are recycled.

6. Control Technology - Currently no control methods are applied to the weak SO_2 stream from the sintering operation. Best available control technology is application of chemical scrubbing techniques. These are described in Section 2, Process No. 6, which discusses scrubbers used for control of SO_2 from reverberatory smelters and similar processes. Exit gases may be cooled by air dilution and water sprays in preparation for gas cleaning.

TABLE 4-12. PARTICULATE EMISSIONS FROM A ZINC SINTERING PROCESS (10)

		Size	Cd	Pb	Zn	Cu	Total particulates
Cyclone and ESP control	Emission factors (kg/metric ton zinc)	>2 μm	0.432	0.310	0.846	0.002	4.97
		<2 μm	0.648	0.435	0.794	0.001	3.28
		Total	1.08	0.745	1.64	0.003	8.25
	Emission rates (kg/hr)	>2 μm	3.43	2.45	6.71	0.017	39.4
		<2 μm	5.14	3.45	6.29	0.011	25.9
		Total	8.57	5.90	13.0	0.027	65.3
Cyclone control only	Emission factors (kg/metric ton zinc)	Total	3.16	2.18	4.80	0.010	24.1
	Emission rates (kg/hr)	Total	17.1	6.43	38.8	0.118	191

TABLE 4-13. PARTICULATE EMISSIONS FROM A ZINC COKING FURNACE (10)

	Size	Cd	Pb	Zn	Cu	Total particulates
Emission factors (kg/metric ton zinc)	>2 μm	0.421	0.250	10.3	0.005	12.2
	<2 μm	0.749	0.375	2.48	0.004	11.7
	Total	1.17	0.625	12.8	0.010	23.9
Emission rates (kg/hr)	>2 μm	0.670	0.400	16.5	0.009	19.6
	<2 μm	1.20	0.600	3.98	0.007	18.7
	Total	1.87	1.00	20.5	0.016	38.3

Ideal control for SO_2 emissions from sintering would be to eliminate as much sulfur as technically possible during roasting. Based on the capability of fluid bed and suspension roasters, a calcine averaging 1.5 percent total sulfur could be produced, rather than the current typical calcine with approximately 3 percent total sulfur. Roasting operations that reduce the residual sulfur content in the calcine produce a corresponding decrease in sulfur emissions to the atmosphere by sintering. Since additional coke or coal is then needed to accomplish sintering, elimination of sulfur in the calcine could increase costs.

Various combinations of settling flues, cyclones, ESP's, and baghouses are used on sintering machines. Efficiencies range from 94 to 99 percent. Table 4-12 includes comparative data for different control devices.

Sinter crushing and screening operations have enormous potential for particulate emissions. These operations are hooded and ducted to control devices. The exhaust gas is further cooled by dilution air and water sprays to condition it for cleaning in dust collectors.

7. EPA Source Classification Code - 3-03-030-03

8. References -

1. Development Document for Interim Final Effluent Limitations Guidelines and Proposed New Source Performance Standards for the Zinc Segment of the Nonferrous Metals Manufacturing Point Source Category. EPA-440/1-75/032. Effluent Guidelines Division Office of Water and Hazardous Materials. U.S. Environmental Protection Agency. Washington, D.C. November 1974.

2. Field Surveillance and Enforcement Guide for Primary Metallurgical Industries. EPA-450/3-73-002. Office of Air and Water Programs, U.S. Environmental Protection Agency. Research Triangle Park, North Carolina. December 1973.

3. Lund, R.E., et al. Josephtown Electrothermic Zinc Smelter of St. Joe Minerals Corp. AIME Symopsium on Lead and Zinc, Vol. II. 1970.

4. Howe, H.E. Cadmium and Cadmium Alloys. In: Kirk-Othmer. Encyclopedia of Chemical Technology. Interscience Division of John Wiley and Sons, Inc. New York. 1967.

5. Schlechten, A.W., and A. Paul Thompson. Zinc and Zinc Alloys. In: Kirk-Othmer. Encyclopedia of Chemical Technology. Interscience Division of John Wiley and Sons, Inc. New York. 1967.

6. Development Document for Interim Final Effluent Limitations Guidelines and Proposed New Source Performance Standards for the Zinc Segment of the Nonferrous Metals Manufacturing Point Source Category. Battelle Columbus Laboratories. EPA Contract No. 68-01-1518. Draft data.

7. McMahon, A.D., et al. The U.S. Zinc Industry: A Historical Perspective. Bureau of Mines Information Circular 8629. U.S. Department of Interior. 1974.

8. Fejer, M.E., and D.H. Larson. Study of Industrial Uses of Energy Relative to Environmental Effects. EPA-450/3-74-044. U.S. Environmental Protection Agency. Research Triangle Park, North Carolina. July 1974.

9. Jones, H.R. Pollution Control in The Nonferrous Metals Industry. Noyes Data Corporation. Park Ridge, New Jersey. 1972.

10. Jacko, Robert B., and David W. Nevendorf. Trace Metal Emission Test Results from a Number of Industrial and Muncipial Point Sources. Journal of the Air Pollution Control Association. 27(10):989-994. October 1977.

Vertical Retorting

1. Function - The vertical retort process is a continuous reduction/volatilization method for producing high-purity zinc from zinc oxide by reduction with carbon at elevated temperatures in vertical silicon-carbide retorts. An alternate retorting process is the electric retort (Process No. 9). The older horizontal retorting process is no longer in use in the United States.

Because of the relatively low boiling point of zinc (906°C), reduction and purification of zinc-bearing minerals can be accomplished to a greater extent than with most minerals. Immediate separation from nonvolatile impurities is possible. In fact, if the material is treated pyrometallurgically, there is virtually no alternative. Even at 857°C (the lowest temperature at which the oxide can be continuously reduced), the vapor pressure of zinc is high enough to cause it to vaporize immediately upon reduction. Balanced against the easy separation from nonvolatiles, however, are the difficulties of condensing the vapor and the high volatility of several of the most common impurities, especially cadmium and lead.

The substance most responsible for direct reduction of zinc commercially is carbon monoxide. The zinc-reduction cycle consists of the following reactions:

$$ZnO + CO \rightarrow Zn(vapor) + CO_2 \text{ (actual reduction step)}$$

$$CO_2 + C \rightarrow 2\ CO \text{ (reneneration of CO)}$$

Both reactions are reversible, and since the second is the slower of the two at temperatures below about 1100°C, it controls the rate of reduction in most commercial situations. Above 1100°C the rates of diffusion and heat transfer predominate as rate-controlling factors. Both of the above reactions are highly endothermic (1). The following additional reactions occur during retorting:

$$Fe_2O_3 + 3C \rightarrow 2Fe + 3CO$$

$$Fe_2O_3 + C \rightarrow 2FeO + CO$$

$$ZnS + Fe \rightarrow Zn + FeS$$

$$Zn + CO_2 \rightarrow ZnO + CO \text{ (blue powder formation)}$$

$$Zn_2SiO_4 + 2C \rightarrow 2Zn + 2CO + SiO_2$$

$$FeO + SiO_2 \rightarrow xFeO{\cdot}SiO_2 \text{ (slag formation).}$$

Carbon for reduction is normally provided by coal or coke, the choice determined by the need for structural strength within the smelting column or, if zinc oxide is the product, by the danger of contaminating the product with soot. Carbon in excess of stoichiometric reduction requirements is normally

provided to furnish extra reaction surface; this compensates for the slowness of reduction of carbon dioxide by carbon.

The charge to a vertical retort must be in the form of a hard sinter or briquette. The reduction fuel is mixed with ore and a temporary binder. The briquettes are then coked in an autogeneous coking furnace in an operation that also drives off volatiles which serve as fuel. Each unit has a capacity of 90 to 108 metric tons of briquettes averaging about 40 percent zinc (1).

Although briquetting is an expensive operation, the ability to use briquetted sinter feed could be turned into an advantage since it permits the use of a soft sinter produced either by coke-sintering or roast-sintering. Such a process is being used in England by the Imperial Smelting Corporation, Limited, but, with one exception, has not been adopted by domestic producers.

Vertical retorts are large, refractory-lined vessels with external gas chambers. The furnaces consist of three major sections - the charge column, the reflux section, and the combustion-heating chambers. The retort is rectangular in general cross-section, about 0.3 meter wide, 1.8 to 2.4 meters long, and 10.6 meters high, giving a capacity of about 7.25 metric tons of zinc per retort per day. Walls are of silicon carbide to facilitate heat transfer and minimize penetration by zinc vapor. Joints in the end walls are packed with silicon carbide and graphite to permit differential expansion upon heating. Production rates are reported at an average 195 to 215 kilograms of metallic zinc per day for each square meter of long wall surface when heated to 1300°C. Reported life of retorts is about 3 years (1).

Without intermediate cooling, coked briquettes are fed to the charging extension at the top of each vertical retort. The charge is heated by gas in chambers surrounding the retort sidewalls. Gases from the combustion chambers are used to preheat incoming air for combustion by means of recuperators. The briquettes maintain their shape throughout the reduction operation. The furnace has a vertical retort shaft which allows the charge, with the aid of gravity, to pass downward through the combustion or heating zone of the column; heat produced in the combustion chamber is transferred through the refractory walls of the column to the charge. As the charge moves down through the retort, the zinc oxide decomposes to form zinc vapors and carbon monoxide. Approximately 95 percent of the zinc vapor leaving the retort is condensed to liquid zinc (2). The residue, containing approximately 10 percent zinc (3), is removed at the bottom through an automatically controlled roll discharge mechanism into a quenching compartment, from which it is removed for further treatment.

During the passage of the briquettes through the retort, sufficient air or exhaust combustion products are introduced at the base of the charge to ensure that no zinc vapor moves concurrently with the charge and eventually condenses on spent residue. The gaseous-reaction products formed in the retort, which rise up through the charge column, are approximately 40 percent zinc vapor, 45 percent carbon monoxide, 8 percent hydrogen, 7 percent nitrogen, and some carbon dioxide (4). These gases exit near the top of the charge column, pass through a zinc condenser, and then to a venturi scrubber.

By means of a splash system, whereby a mechanically driven device fills the condenser chamber with a rain of zinc droplets that fall back into a batch of molten zinc, the zinc vapor from the retorts is condensed and collected with excellent efficiency. Over 95 percent of the zinc vapor leaving the retort is condensed to liquid zinc (5). The carbon monoxide is recycled to the combustion zone.

When the zinc vapor is not cooled quickly enough from reduction temperatures to condensation temperatures, some of the carbon monoxide present in the mixture decomposes into carbon dioxide. This carbon dioxide, and the small amount already present in the vapor mixture, oxides a portion of the vaporized zinc at temperatures below 1100°C. The resulting zinc oxide adheres to fine globules of condensed zinc forming an undesirable by-product called "blue powder" (1). The blue powder floats on top of the zinc bath and is periodically skimmed off. Scrubbers may be used to remove the entrained blue powder from the flue gases, and the cleaned gas may be either used as supplementary fuel or flared.

About one-half of the zinc produced in vertical retorts is refined to 99.99 percent purity by means of continuous fractional distillation. The condensed vapors from this process are typically high in cadmium content and can be used for cadmium recovery. The boiling point of lead is about 1620°C and of cadmium, 767°C. The boiling point of zinc lies between the two. Since none of these elements forms stable compounds with each other that vaporize without dissociation, they are amenable to separation by fractional distillation. The most common method entails dual fractionating columns of silicon carbide, heated externally. Cadmium and zinc are largely volatilized from the first column, leaving lead, iron, and other high-boiling-point constituents that can be removed from the base. The condensate passes to a second, or cadmium, column where cadmium and low-boiling-point impurities are removed by reflex condensation. Purified zinc flows out the bottom of the column. The cadmium is collected as cadmium-zinc metal or as cadmium dust depending on how the process is operated.

2. Input Materials - Feed consists of sinter, coal or coke, and recycled material in the blue powder charge. In addition, since the charge must be either a hard sinter or briquette, temporary binder such as sulfite waste liquor, tar, or pitch is added. A typical composition is 60 percent sinter, 25 percent bituminous coal, 5 percent anthracite fines, 10 percent plastic refractory clay, and 1 percent sulfite liquor (4). With zinc recovery typically 90 percent, about 2.8 metric tons of feed is required per metric ton of zinc collected in the condenser for a feed containing 40 percent by weight zinc. Quantities of coal or coke required range from 0.5 to 0.8 metric ton per metric ton of slab zinc produced (3).

3. Operating Conditions - Vertical reduction furnaces generally operate from 1300 to 1400°C (1). Internal pressures are slightly below ambient. Exact operating temperatures for fractional distillation or other purification steps vary, since separation is based on differences in boiling points.

4. Utilities - Heating is done in vertical retort furnaces by combustion of gas surrounding the retort side walls. One source eliminates that 4,000 to 5,000 kilocalories per kilogram of zinc are required (6). Another source reports energy efficiency to be about 10 percent, with typical energy consumption 5.0 million kilocalories per metric ton of zinc produced. One company using vertical retorts finds that 9.1 million kilocalories of coal and coke per metric ton of zinc produced is required for the briquetting process. However, this company claims an energy consumption by retorts of only 2.8 million kilocalories per metric ton of distilled zinc, for a total energy consumption of 12.8 million kilocalories per metric ton (7). Energy requirements for refining are about 834,000 kilocalories per metric ton of zinc produced (8).

5. Waste Streams - Emissions are minor when compared with other steps in the smelting process such as roasting and sintering. SO_2 emissions average less than 50 ppm (9). Flow rate for the carrier gas is 23,000 cubic meters per metric ton of product, with 2.5 to 3.0 percent carbon dioxide (3).

Particulate emissions are evident only during charging for approximately one minute. High-efficiency metal recovery is possible from these metal and metal oxide fumes. Information on particulate emissions, including size distribution data is presented in Table 4-14. Blue powder is the principal constituent of these emissions along with cadmium, copper, chromium, lead, and iron.

The zinc and coke content of the feed and the air flow rates are the important process variables. Temperature is the most important process parameter.

The gas washing water contains zinc and metal oxides, possibly hydrocarbons, various particulates (as suspended solids), and the corresponding products of hydrolysis.

Residues are also generated in vertical retorting operations. Amounts produced are around 1050 kilograms per metric ton of zinc produced (3). The residues contain a variety of metals such as lead, copper, silver, gold, nickel, germanium, gallium, arsenic, antimony, cadmium, zinc, indium, silicon, iron, calcium, aluminum, magnesium, and manganese.

The germanium and gallium contents originally found in the blends are, in general, concentrated in the residues from the retorts. These residues can be treated by dissolution in caustic soda, followed by treatment by various methods, most important probably being the extraction of gallium chloride with an organic solvent. There are many variations on these methods to circumvent various impurity problems. This processing is not done at any of the primary zinc smelters. Two companies, one in Arkansas and one in Oklahoma, account for the total domestic production of gallium, using residues from zinc and aluminum production. One refinery in Oklahoma produced all the primary domestic germanium from zinc smelter residues in 1976 (11).

An analysis of some constituents in the residue from one vertical retort furnace is given in Table 4-15.

TABLE 4-14. UNCONTROLLED PARTICULATE EMISSIONS FROM A ZINC VERTICAL RETORTING FURNACE (10)

	Size	Cd	Pb	Zn	Cu	Total particulates
Emission factors (kg/metric ton zinc)	>2 μm	0.006	0.038	0.920	0.0006	2.11
	<2 μm	0.027	0.131	2.28	0.0004	5.04
	Total	0.033	0.169	3.20	0.001	7.15
Emission rates (kg/hr)	>2 μm	0.002	0.016	0.393	0.0002	0.890
	<2 μm	0.012	0.057	0.967	0.0002	2.14
	Total	0.014	0.073	1.36	0.0004	3.03

TABLE 4-15. ANALYSIS OF VERTICAL RETORT FURNACE RESIDUES (3)

Constituent	Concentration, ppm
Cadmium	850
Chromium	46
Copper	4,600
Lead	2,400
Zinc	107,000

Blue powder production amounts to only about 3 percent of the zinc charged, considerably less than in horizontal retorting (12). The residue also contains less zinc.

In the redistillation system, no zinc vapors can escape since it is a closed circuit. Solid residues can be reprocessed to recover zinc and other metals. Waste gases are produced by the combustion; their composition depends on the type of fuel used.

6. Control Technology - Wet scrubbers are the available control method for particulate emissions. All gases are exhausted from the furnace by means of a venturi scrubber. The carbon monoxide from the zinc condensation chamber is scrubbed with water sprays to remove entrained solids. The gas is then used as part of the fuel for heating the retorts. Metallic zinc and zinc oxide is recovered as blue powder residue from the scrubbing system and from the condenser during periodic cleaning. The blue powder is recycled.

Residues are either disposed of in open slag dumps or processed to recover their metal values. The best control technology for the slag dump is sealing the soil and routing runoff to a waste treatment lagoon.

7. EPA Source Classification Code - 3-03-030-05

8. References -

1. Schlechter, A.W., and A. Paul Thompson. Zinc and Zinc Alloys. In: Kirk-Othmer. Encyclopedia of Chemical Technology. Interscience Division of John Wiley and Sons, Inc. New York. 1967.

2. McMahon, A.D., et al. The U.S. Zinc Industry: A Historical Perspective. Bureau of Mines Information Circular 9629. United States Department of the Interior. 1974.

3. Calspan Corporation. Assessment of Industrial Waste Practices in the Metal Smelting and Refining Industry - Volume II, Primary and Secondary Nonferrous Smelting and Refining. Draft. April 1975.

4. Field Surveillance and Enforcement Guide for Primary Metallurgical Industries. EPA-450/3-73-002. Office of Air and Water Programs, U.S. Environmental Protection Agency. Research Triangle Park, North Carolina. December 1973.

5. Development Document for Interim Final Effluent Limitations Guidelines and Proposed New Source Performance Standards for the Zinc Segment of the Nonferrous Metals Manufacturing Point Source Category. EPA-440/1-75/032. Effluent Guidelines Division Office of Water and Hazardous Materials. U.S. Environmental Protection Agency. Washington, D.C. November 1974.

6. Restricting Emission of Dust and Sulfur Dioxide in Zinc Smelters. Association of the Metal Smelting and Refining Trade and Committee on Zinc of the German Ore Smelting and Mining Society VDI No. 2284. September 1961.

7. Battelle Columbus Laboratories. Development Document for Interim Final Effluent Limitations Guidelines and Proposed New Source Performance Standards for the Zinc Segment of the Nonferrous Metals Manufacturing Point Source Category. EPA-68-01-1518. Draft data.

8. Fejer, M.E., and D.H. Larson. Study of Industrial Uses of Energy Relative to Environmental Effects. EPA-450/3-74-044. U.S. Environmental Protection Agency. Research Triangle Park, North Carolina. July 1974.

9. Background Information for New Source Performance Standards: Primary Copper, Lead, and Zinc Smelters. EPA-450/2-74-002a. Office of Air and Waste Management. U.S. Environmental Protection Agency. Research Triangle Park, North Carolina. October 1974.

10. Jacko, Robert B., and David W. Neuendorf. Trace Metal Particulate Emission Test Results from a Number of Industrial and Municipal Point Sources. Journal of the Air Pollution Control Association. 27(10):989-994. October 1977.

11. Commodity Data Summaries 1977. U.S. Department of the Interior, Bureau of Mines. Washington, D.C. 1977.

12. Water Pollution Control in the Primary Nonferrous Metals Industry - Vol. 1, Copper, Zinc, and Lead Industries. EPA-R2-73-247a. Office of Research and Development, U.S. Environmental Protection Agency. Washington, D.C. September 1973.

Electric Retorting

1. Function - Electric retorting is a continuous reduction/volatilization process in which electricity supplies the energy needed to produce high-purity zinc from zinc oxide by reduction with carbon at elevated temperatures in a vertical cylindrical retort. Vertical retorting (Process No. 8) is the other reduction method in use at zinc smelters. This newest zinc-smelting furnace was designed to overcome the difficulties involved in heating the charge externally. As in the other retorting process, carbon monoxide is used for direct reduction, producing zinc vapor. The carbon dioxide also produced in this reaction is regenerated with carbon. The carbon for reduction is provided by coke.

There are several variations on the resistance-type electric furnace available, including the electrothermic arc furnace (Sterling Process) and the Imperial Smelting Furnace. However, the only electric retorts in use in the United States are the electrothermic furnaces developed by St. Joe Minerals Corporation, which began commercial operation in 1930 (1).

The St. Joe electrothermic furnaces are basically vertical, refractory-lined cylinders. The largest furnaces now in use have an inside diameter of 1.5 meters and are 15 meters high, with a production capacity of about 90 metric tons per day (2). Graphite electrodes protrude into the shaft, and the reaction heat is generated from the resistance of the furnace charges to the current flow between the electrodes. Eight pairs of electrodes introduce power into the furnace. Each top electrode has a mate near the bottom.

Preheated coke and sinter, along with miscellaneous minor zinc-bearing products such as blue powder, are fed continuously into the top of the furnace from a rotary feeder. As in a vertical retort, gravity moves the charge downward through the shaft. Unlike other retorting processes, an unusually hard sinter is required to maintain strength and porosity in the tall columns, even after most of the zinc content has been removed. Silica is usually added to the sinter mix to increase its structural strength. The coke serves as the principal electrical conductor, carrying the alternating current between each top electrode and the bottom electrode on the opposite side. The heat developed provides the energy required for smelting. The zinc vapor and carbon monoxide produced pass from the main furnace to a vapor ring, which provides a free space around the periphery of the charge for removal of the gaseous mixture. The gas then goes to a condenser, where zinc is recovered by bubbling through a molten zinc bath. It was the development of this Weaton-Najarian vacuum condenser that first made possible the production of over 90 metric tons per day from a single unit. If necessary, further refining, such as the liquation and redistillation steps described for the other retorting processes, may be used.

The electrothermic furnace has a number of advantages over other processes. First, the increased thermal efficiency (compared with external heating methods) results in cost savings in fuel consumption. Larger quantities of charge can be treated, and the continuous operation is amenable to

automation. The furnace can readily process secondary zinc scrap and zinc residues. Because of special deleading by heat treatment in multiple-hearth roasters followed by desulfurization in fluidized-bed roasters, electrothermic furnaces emit practically no SO_2 or particulates.

2. Input Materials - The feed consists of sinter, coke, and recycled zinc-bearing products, such as blue powder. In addition, silica is usually added to increase structural strength. Particle size is controlled so as to provide coke particles larger than sinter, thereby concentrating larger coke at the axis of the furnace. In this way the maximum fraction of electric current is directed along the axis, which becomes the region of maximum temperature, minimizing both damage to the refractory walls by slagging and heat loss through the walls. Quantities of coke required range from 0.5 to 0.8 ton per ton of slab zinc produced (3).

3. Operating Conditions - The St. Joe electrothermic furnaces operate at atmospheric pressure. Internal temperatures are 1400°C and higher at the axis of the furnace, 1200°C in the main body of the charge, and 900°C near the wall. A vacuum of 15 to 25 centimeters mercury is applied to the outlet of the condenser, causing the vapor/gas mixture to be drawn through it in large bubbles (4). Water-cooled hairpin loops at the condenser cooling well maintain a constant batch temperature of 480° to 500°C (2). Temperatures for purification steps vary, since separation is based on differences in boiling points.

4. Utilities - Electrothermic furnaces use electricity to supply the energy for reduction. Current through each of the 30-centimeter diameter graphite electrodes may range as high as 800 amperes. A furnace contains eight individual single-phase circuits, each typically carrying 770 to 1190 kilowatts. The working range for such a circuit is 250 to 160 volts. The overall power factor of transformers, bus system, and furnaces is from 90 to slightly over 95 percent. One plant using electrothermic furnaces reported energy consumption averaging 2800 kilowatt-hours per metric ton of metal. Power input per electrode circuit ranging up to 1255 kilowatts, corresponding to a maximum of 10,000 kilowatts per furnace has been reported (5). Energy consumption for subsequent refining steps is the same as that used in other retorting processes.

Another source reports 25 to 30 percent energy efficiency for electrothermic retorting, with the process consuming about 2.8 million kilocalories per metric ton of zinc. With an additional 5.8 million kilocalories per metric ton of zinc consumed as coke, a total of 8.6 million kilocalories per metric ton of zinc is used. If the energy for electric generation is also considered (assuming 33 percent efficiency), total energy consumption increases to 14.2 million kilocalories per metric ton (6).

5. Waste Streams - As with other types of retorting, emissions are minor relative to those from roasting or sintering.

Particulate emissions consist primarily of metal and metal oxide fumes. Particulate emission levels for electrothermic retorting average about 10 kilograms per metric ton of zinc produced. As in the other retorting processes, blue powder is the principal constituent of these emissions, along with cadmium, copper, chromium, lead, and iron. Also as with the other processes, the important process variables are the zinc and coke content of the feed and the air flow rates. Temperature, which is controlled by regulating current flow to the electrodes, is the most important process parameter.

Temperature of the gases vented from the furnace vapor ring averages 850°C. Gas composition is approximately 45 percent zinc vapor and 45 percent carbon monoxide; the balance is nitrogen, carbon dioxide, and hydrogen (5).

The gas washing water contains the same impurities as in vertical retorting.

The residues generated during electrothermic reduction are similar in composition and quantity to those from the other retorting processes. Germanium and gallium are extracted from the residues by various methods at other facilities.

Waste streams from further purification steps such as liquation and redistillation are the same as described for vertical retorting.

6. Control Technology - High-velocity-impingment-type scrubbers are used to clean gases from the condenser. The clean gas, containing 80 percent carbon monoxide and having a heating value of 2200 kilocalories per cubic meter, furnishes fuel for smelter use (5). Some blue powder or uncondensed zinc and zinc oxide is later recovered by settling the scrubber slurry in ponds. The solids (75 to 80 percent zinc) are dried and briquetted for furnace feed.

Residue is removed from the furnace, preferably as discrete solid particles. It goes to a reclamation plant, where residual coke and some unreacted zinc are recovered and recycled. Besides permitting recovery of residue containing enough zinc and carbon to make retreatment worthwhile, a minimum of power is consumed in unproductive melting of residue. At the reclamation plant, where sand may be added to make a hard sinter, sufficient ferrosilicon is present in some residues to warrant recovery as a by-product.

7. EPA Source Classification Code - None

8. References -

1. Background Information for New Source Performance Standards: Primary Copper, Lead, and Zinc Smelters. EPA-450/2-74-002a. Office of Air and Waste Management, U.S. Environmental Protection Agency. Research Triangle Park, North Carolina. October 1974.

2. Development Document for Interim Final Effluent Limitations Guidelines and Proposed New Source Performance Standards for the Zinc Segment of the Nonferrous Metals Manufacturing Point Source Category. EPA-440/1-75/032. Effluent Guidelines Division Office of Water and Hazardous Materials. U.S. Environmental Protection Agency. Washington, D.C. November 1974.

3. Calspan Corporation. Assessment of Industrial Waste Practices in the Metal Smelting and Refining Industry - Volume II, Primary and Secondary Nonferrous Smelting and Refining. Draft. April 1975.

4. Schlechter, A.W., and A. Paul Thompson. Zinc and Zinc Alloys. In: Kirk-Othmer. Encyclopedia of Chemical Technology. Volume 22. Interscience Division of John Wiley and Sons, Inc. New York 1967.

5. Lund, R.E., et al. Josephtown Electrothermic Zinc Smelter of St. Joe Minerals Corporation. AIME Symposium on Lead and Zinc, Vol. II. 1970.

6. Fejer, M.E., and Larson, D.H. Study of Industrial Uses of Energy Relative to Environmental Effects. EPA-450/3-74-044. U.S. Environmental Protection Agency. Research Triangle Park, North Carolina. July 1974.

Oxidizing Furnace

1. Function - In the direct, or American, process for zinc oxide production, zinc vapor from sintering is immediately oxidized without being condensed. As with zinc metal production, zinc must first be produced in vapor form. Only the direct method of producing zinc oxide is discussed because other production methods, such as the French process, start with slab zinc, the major product of the primary zinc industry.

The three types of furnaces used for this purpose in the U.S. are the grate-type furnace, the rotary or Waelz kiln, and the electrothermic furnace. In all three, the feed is reduced to form zinc vapor and subsequently the vapor is oxidized and the product collected. Two of the main difficulties in producing zinc metal, dilution of the zinc vapor and reoxidation by carbon dioxide, are desirable in the production of zinc oxide.

In grate-type furnaces, the coal-sinter feed (usually as briquettes) is spread over grates (traveling or stationary). Coal is spread first and ignited, then the sinter is deposited on top of the fuel layer. Air is forced through the bed to support combustion and furnish a reducing atmosphere to liberate the zinc vapors. The zinc vapors are then ducted to a combustion chamber, where oxidation occurs and the zinc oxide product is formed.

The Waelz kiln is a large diameter, long rotary kiln that can be used for production of pure zinc oxide, although it is more commonly used for pyrometallurgical concentration of residues of a rather mixed character. Zinc-bearing material and solid fuel are continuously fed to the kiln, which typically rotates 1 to 1.5 rpm (1). The additional heat for reduction of the zinc is supplied by the flow of gaseous fuel through the kiln. The vaporized zinc then is ducted to a combustion chamber, where air is admitted and the vapor burned to form zinc oxide. Temperature control is very important, since intimate contact must be maintained between the solid, zinc-bearing part of the charge, the solid fuel in the charge, and the reducing atmosphere.

The St. Joe vertical electrothermic furnace may be modified for use as either a metal or an oxide producer (2). Instead of a large "vapor ring" or bulge in the furnace barrel midway between the upper and lower electrodes, the oxide furnace has openings at four levels between the electrodes, through which evolved zinc vapor and carbon monoxide exit the charge. Preheated coke and zinc-bearing sinter are continously fed to the furnace. Coke serves as the principal electrical conductor. Electricity introduced through the electrodes develops the heat energy required for smelting. Further details on the electrothermic furnace are given in Process No. 9.

Analysis of an American process zinc oxide from one plant is presented in Table 4-16.

TABLE 4-16. ZINC OXIDE IMPURITIES AND BRIGHTNESS (2)

Lead as PbO	0.009%
Cadmium as CdO	0.010%
Iron as Fe_2O_3	0.015%
Manganese as MnO	0.002%
+325 mesh screen residue	<0.03%
Brightness; Hunter D-40	93.0 for large sizes 91.0 for fine sizes

The zinc oxide is filtered from the carrier gases in bag collectors. Soft zinc oxide pellets may be formed by squeezing the oxide between two rubber rolls to form pellet nuclei.

2. Input Materials - The mix for a grate-type furnace is typically 50 percent sinter briquettes and 50 percent coal (1). The preferred type of coal is a fine-sized anthracite, used to minimize contamination of the vapor stream with soot and to prevent caking and slagging.

For the rotary kiln, the mix is usually 65 to 75 percent zinc-bearing material and the remainder crushed coal or anthracite (to give about 25 percent carbon in the charge) plus a small amount of sand to stiffen the bed, if desired (1).

The principal feed to the electrothermic furnace also consists of sinter and coke, but as much as 25 percent of the total zinc input is other zinc-bearing materials. Nominal coke rate is 44 percent of the weight of sinter (roughly equal volumes of coke and sinter) and approximately 300 percent of the stoichiometric carbon relative to the zinc in the sinter. Other zinc-bearing materials are fed in the form of almond-shaped briquettes, granules, 8 by 25 millimeter metallic screenings, and slab dross (2). High product purity is achieved by using low-volatility cokes and sinter that is low in impurities.

3. Operating Conditions - The grate-type furnace and rotary kiln operate at atmospheric pressures. Temperatures in the grate-type bed range from 1000° to 1950°C (1); no data are given on operating temperatures for the rotary kiln.

Electrothermic furnaces also operate at atmospheric pressures. Operating conditions are the same as in electrothermic furnaces for zinc metal production, with temperatures of 1200°C at the vapor ring elevation, 1400°C in the main smelting zone, 900°C near the walls, and 1300°C at the bottom electrode elevation (1). Further details on operating conditions of electrothermic furnaces are given in Process No. 9.

4. Utilities - No information is available regarding heat input per unit of product output for grate-type or rotary kiln processes. The bed is ignited by residual heat from the previous charge in grate-type furnaces, and gaseous fuel supplies the heat for reduction in rotary kilns. Air is added in all three furnaces in unspecified quantities.

The main factor influencing production in electrothermic furnaces is the quantity of electricity introduced. Josephtown's largest furnace operates at 10,000 kilowatts. Energy consumption averages 2800 kilowatt-hours per metric ton of metal (2).

5. Waste Streams - Combustion products and some zinc oxide are emitted from all three furnaces; again, quantities are unspecified.

There are no liquid wastes from the process.

A solid residue is produced, estimated at 350 kilograms per metric ton of zinc oxide. This residue contains approximately 6.2 percent zinc and 0.09 percent of other metals such as cadmium, chromium, copper, and lead (3). It may also contain slag, coke, and globules of ferrosilicon. One analysis of waste samples from oxide furnace residue revealed concentrations presented in Table 4-17.

TABLE 4-17. SELECTED CONSTITUENTS OF OXIDIZING FURNACE RESIDUE (3)

Constituent	Concentration, ppm
Cadmium	10
Chromium	17
Copper	810
Lead	68
Zinc	62,000

Further details on waste streams from electrothermic furnaces are given in Process No. 9.

6. Control Technology - Control techniques for direct zinc oxide processes are similar to those used in other reduction operations. Further details are given in Process No's. 7, 8, and 9. Uncondensed zinc (blue powder) in gases from the condenser is recovered by settling the water slurry in ponds. Solids can be dried and briquetted for furnace feed.

7. EPA Source Classification Code - None

8. References -

1. Schlechten, A.W., and A. Paul Thompson. Zinc and Zinc Alloys. In: Kirk-Othmer. Encyclopedia of Chemical Technology. Interscience Division of John Wiley and Sons, Inc. New York. 1967.

2. Lund, R.E., et al. Josephtown Electrothermic Zinc Smelter of St. Joe Minerals Corp. AIME Symposium on Lead and Zinc. Volume II. 1970.

3. Calspan Corporation. Assessment of Industrial Waste Practices in the Metal Smelting and Refining Industry - Volume II, Primary and Secondary Nonferrous Smelting and Refining. Draft. April 1975.

Leaching

1. Function - Electrolytic production of zinc is an alternative to pyrometallurgical processing. The first step is to separate zinc from gangue minerals by leaching roasted calcine in recycled electrolyte solution. The zinc dissolves, and the insoluble gangue is separated from the solution by decantation, thickening, and filtration. The solution is purified (Process No. 12) and the waste solids are either discarded or, if their concentration warrants, further processed to recover lead and precious metals (1,2).

Two general leaching methods can be employed, described as either a single or a double leach. In a single leach, recycled electrolyte, which is a solution containing principally sulfuric acid, is brought only once into contact with the calcine. Zinc oxide in the calcine reacts with sulfuric acid to form soluble zinc sulfate and water. The single leach is not often practiced, however, since losses of sulfuric acid are excessive and recovery of zinc is poor.

Double leaching is used most often. In several variations, the calcine is leached first in a solution that is neutral or slightly alkaline, then in an acidic solution, with the liquid passing countercurrently to the flow of calcine. In the neutral leach, the readily soluble sulfates from the calcine dissolve, but only a portion of the zinc oxide enters into solution. The second acidic leach solubilizes the remainder of the zinc oxide, but also dissolves many impurities, especially iron. Recycle of the liquor to the first neutral stage causes much of the iron to reprecipitate, so the neutral leach acts also as an initial stage of solution purification. In some of the more complex process variations, considerable overlap occurs between leaching and purification steps, and the calcine may be subjected to as many as four leaching operations in progressively stronger or hotter acids to bring as much of the zinc as possible into solution.

The leaching process is conducted most often in a series of agitated tanks. Batch operation is common, since it is thereby possible to compensate for variations in calcine composition. A few smelters, especially those processing ore of consistent quality, are equipped with continuous leaching equipment. In all of the leaching operations, the pH, temperature, and solution composition at each step are carefully regulated.

2. Input Materials - The principal input to the leaching process is calcined zinc concentrate from roasting (Process No's. 4, 5, and 6). If a pelletized feed is used in the roaster, the calcine must be ground prior to leaching. Air classification and grinding is occasionally practiced also with unpelletized material. One foreign plant grinds calcine to 95 percent through a 200-micron screen (about 70 mesh) (3). Wet grinding with a portion of the leach liquor is also practiced in some smelters.

The only other input specific to the leaching process is recycled spent electrolyte from Process No. 13, containing about 200 grams of sulfuric acid per liter (2).

3. Operating Conditions - Batch leaching processes usually operate at atmospheric pressure, whereas continuous processes may include pressurized steps up to 2.5 kilograms per square centimeter (1). Most leach operations take place around 50°C; exothermic chemical reactions maintain this temperature without requiring additional heat energy. Some hot acid process variations may employ temperatures up to 90°C(3).

4. Utilities - Electricity is required for pumping the solution and conveying the calcine and final residue. No estimates of energy consumption for the leaching process are given. In batch leaching, air at about 6.3 kilograms per square centimeter must be available to clear out accumulating deposits of coarse material at the bottom of the tanks. In continuous leaching, it is seldom necessary to use air at pressures higher than the normal operating pressure of 1.4 to 2.5 kilograms per square centimeter (1). Continuous leaching requires a larger total volume of air per tank, because agitation must be continuous. During agitation in either process, consumption ranges from 2.8 to 4.2 cubic meters of air per minute (1).

5. Waste Streams - As in the closely associated purification process, emissions of acid mist occur from the leach tanks. This waste is described more completely in Process No. 12.

Leach solution may be cooled in open towers, as described for electrolyte cooling in Process No. 13. Atmospheric mist may therefore be created from these towers, as described in connection with the electrolysis process.

Except for leaks and spills, no liquid waste is produced from this process.

After all leaching, the solid residue is filtered from solution and the filter cake is rinsed with fresh water. This cake will contain all the lead originally present in the concentrate, and also other acid-insoluble trace elements such as indium, gold, and the platinum-group metals. Other minerals present will be silica, alumina, and silicates of iron, aluminum, and calcium. The quantity and composition will vary with the characteristics of the ore concentrate; one measurement reports a quantity of 360 kilograms per metric ton of zinc produced (1).

6. Control Technology - Control of acid mist emissions is described in connection with the similar mists produced in Process Nos. 12 and 13.

The solid residue will frequently be sent to a lead smelter for recovery of the lead and other reclaimable elements. Alternatively, the residue may be batch-treated at the zinc smelter with cyanide for recovery of gold. In other cases, the concentrations of recoverable metals may be so small that the residue will be discarded in a dump. Ore residue from a double leach process should be inert; however, as generally practiced, the residue will also contain trace elements from Process No. 12. Single leach residues may also contain zinc oxide or zinc ferrites. The potential of this waste for secondary water pollution is unreported.

7. EPA Source Classification Code - None.

8. References -

1. Schlechten, A.W., and A. Paul Thompson. Zinc and Zinc Alloys. In: Kirk-Othmer. Encyclopedia of Chemical Technology. Interscience Division of John Wiley and Sons, Inc., New York. 1967.

2. Development Document for Interim Final Effluent Limitations Guidelines and Proposed New Source Performance Standards for the Zinc Segment of the Nonferrous Metals Manufacturing Point Source Category. EPA-440/1-75-032. Effluent Guidelines Division, Office of Water and Hazardous Materials. U.S. Environmental Protection Agency. Washington, D.C. November 1974.

3. E. Van Den Neste. Metallurgie Hoboken-Overpelt's Zinc Electrowinning Plant. CIM Bulletin. August 1977.

Purifying

1. Function - The leaching of zinc calcine causes other elements in addition to zinc to dissolve. Unless impurities are removed from the solution, they will either contaminate the zinc product or interfere with the proper operation of the electrolysis process. The solution from leaching is therefore purified to remove metallic ions that are more electropositive than zinc.

Purification is usually conducted in large agitated tanks. A variety of reagents is added in a sequence of steps that causes impurities to precipitate. The precipitates are separated from the solution by filtration. The purification techniques are among the most advanced applications of inorganic solution chemistry in industrial use, and vary from one smelter to another. Iron is often removed in conjunction with the leaching process (Process No. 11) by precipitation as a hydrated oxide (goethite) or a complex sulfate (jarosite). Some of these processes, which are patented, also reduce the concentration of arsenic and other elements. Almost all smelters then add zinc dust, often in the form of "blue powder" from the pyrometallurgical production of zinc. This addition causes a cementation reaction that precipitates cadmium, copper, and several other elements. The final steps remove all but trace quantities of a group of metals that includes arsenic, antimony, cobalt, germanium, nickel, and thallium. These metals severely interfere with electrolytic deposition of zinc, and their final dissolved concentrations are limited usually to less than 0.05 milligrams per liter.

2. Input Materials - The principal input is the filtered, acidic, mineral-rich solution from Process No. 11. Reagents are mostly inorganic, primarily finely divided metals such as zinc, arsenic, and antimony. Fresh sulfuric acid may be added in small quantities, and lime may be used to remove excess sodium carbonate or sodium hydroxide may be used for iron precipitation. Organic materials such as 1-nitroso-2-naphthol may be used to remove cobalt (1). Inorganic salts such as copper sulfate may be added to catalyze or promote some precipitation reactions. Except for zinc dust, the quantities of these additives are small.

3. Operating Conditions - The purification process takes place at temperatures ranging from 40° to 85°C, and pressures ranging from atmospheric to 2.5 kilograms per square centimeter (2). The conditions at each step of precipitation are carefully regulated.

4. Utilities - Electricity is required to pump solutions and drive equipment agitators. Steam and noncontact cooling water may be used to heat and cool solutions. Quantities are not reported.

5. Waste Streams - The atmospheric emission from this process consists of a mist that develops from the ventilation of the leach and purification tanks. Ventilation is necessary since side reactions can cause evolution of small quantities of explosive hydrogen gas which must not be allowed to accumulate. The mist contains sulfuric acid and smaller quantities of zinc, calcium, and

arsenic (3). There is no estimate of the quantity of waste products released from this source.

Except for leaks and spills, no liquid waste is created by this process.

Precipitated solids consisting of impurity elements and excess reagent metals are accumulated as cakes from pressure filters. The composition of the cakes is variable, depending on the characteristics of the zinc concentrates and the details of the processing. All are highly metalliferous.

In some process modifications, much of the iron, and part of the arsenic and antimony originally present in the concentrate, are precipitated into and discarded with the insoluble residue from Process No. 11.

6. Control Technology - Ventilation of leach and purification tanks is usually controlled with impingement or centrifugal demisting equipment. The efficiency of these devices in this service has not been reported.

The disposition of most of the solid residues has also not been reported. With some zinc concentrates, a filter cake rich in copper is produced which is sold to copper smelters. Some residues are recycled to the roaster or leach tanks, or are separately treated to reclaim zinc and cadmium. Two companies are reported to have refined indium from some of the residues (4). Filter cakes rich in cobalt are apparently being stockpiled by a foreign refinery, and similar disposition may be practiced by some U.S. refineries (2). It is not known whether any of these materials is being discarded.

7. EPA Source Classification Code - None.

8. References:

1. Schlechten, A.W., and A. Paul Thompson. Zinc and Zinc Alloys. In: Kirk-Othmer. Encyclopedia of Chemical Technology. Interscience Division of John Wiley and Sons, Inc. New York. 1967.

2. E. Van Den Neste. Metallurie-Hoboken-Overpolt's Zinc Electrowinning Plant. CIM Bulletin. August 1977.

3. Privileged communication, EPA files.

4. Commodity Data Summaries 1976. U.S. Department of Interior, Bureau of Mines. Washington, D.C. 1977.

Electrolysis

1. Function - In electrolysis, metallic zinc is recovered from the purified solution by passing current through an electrolyte solution, causing zinc metal to deposit on a cathode. Electrolysis takes place in rectangular tanks, or cells, each of which holds a number of closely spaced rectangular metal plates. Alternate plates are made of lead containing 0.75 to 1.0 percent silver; these are the anodes that are electrically connected to a positive potential. The remaining plates are made of aluminum, and are connected with a negative electrical potential. Purified electrolyte from Process No. 12 is circulated slowly through the cells, and water in the electrolyte dissociates, releasing oxygen gas at the anode. Electrode voltage is maintained sufficiently high so hydrogen is not released at the cathode; instead, zinc ions absorb electrons and deposit zinc metal. Hydrogen ions remain in solution, and thereby regenerate sulfuric acid for recycle to the leach process (1,2).

Zinc smelters contain a large number of electrolytic cells, often several hundred. They are most often made of concrete with a lead, plastic, or vitreous lining, and are electrically connected in series banks. A portion of the electrical energy is converted into heat, which increases the temperature of the electrolyte. Therefore, a portion of the electrolyte is continuously circulated through cooling towers. These are usually open towers, in which the electrolyte falls through a rising stream of air drawn through the tower by fans. This method both cools the electrolyte and evaporates the excess water (3). The cooled and concentrated electrolyte is repumped to the cells.

Every 24 to 48 hours, each cell is shut down and the zinc-coated cathodes are removed, rinsed, and the zinc is mechanically stripped from the aluminum plates. Stripping is accomplished manually in some smelters, while others are specialized automated equipment. The aluminum cathodes are then chemically cleaned, replaced in the cells, and the cell is restored to normal operation. Stripped zinc is sent to Process No. 14 for melting and casting.

2. Input Materials - The principal input is purified electrolyte, which is a water solution containing about 70 grams of zinc per liter and about 200 grams of sulfuric acid per liter (4). Barium hydroxide or manganese sulfate may be added to the electrolyte in order to form insoluble coatings on the cell anodes, thereby minimizing both anode corrosion and lead contamination of product zinc. Colloidal materials are also usually added to prevent uneven deposition of zinc on the cathodes; materials used include glue, goulac, gum arabic, and a mixture of agar-agar, sodium silicate, and cresylic acid (2).

3. Operating Conditions - Electrolytic cells operate at 30° to 35°C and atmospheric pressure (4).

4. Utilities - Electrolysis consumes the major amount of energy in an electrolytic zinc smelter. Most plants use direct current at a current density of about 600 amperes per square meter of cathode surface. Voltage drop is 3.3 to 3.5 volts per cell, and current efficiency is 85 to 94 percent. Approximately 3300 kilowatt-hours of power is needed to electrolyze a metric ton of cathode zinc (4).

Electricity in much smaller quantity is used to operate pumps and fans.

5. Waste Streams - There are two sources of atmospheric emissions from this process. Escape of oxygen at the cell anodes causes the formation of a mist of approximately the same composition as the electrolyte that escapes into the air of the cell room. Another mist of the same approximate composition is released from the atmospheric cooling towers. Cell emission has been estimated to be 3.3 kilograms per ton of zinc produced (1). No estimate of cooling tower emissions has been reported.

If the ore concentrate contains quantities of sodium or halogen compounds, a portion of spent electrolyte must be routinely removed and discarded. This is not known to be occurring regularly in U.S. smelters. In general, there is no loss of electrolyte or other liquid waste other than leaks and spills.

A sludge accumulates in the cells which is periodically removed. Table 4-18 provides reported analyses of this material.

TABLE 4-18. ANALYSES OF ANODE SLUDGES FROM ELECTROLYTIC ZINC REFINING (5).

	Concentration, ppm				
	Cd	Cr	Cu	Pb	Zn
Fresh anode sludge	12	10	85	170,000	12,800
Old anode sludge (from dump)	1,400	8	1,900	89,000	39,200

6. Control Technology - Cell rooms must be well ventilated to avoid accumulation of oxygen. This ventilation also serves to remove mist from the room. There are no reports of treatment being applied to this air stream, although this is apparently the largest source of air pollution from the electrolytic process (6).

Treatment of mist from the electrolyte cooling towers is also not documented. An opinion has been expressed that the concentration of these emissions is so diluted by the large volumes of air that it is not a nuisance to nearby residents (3).

Disposition of anode sludge is also unreported. The material is a rich source of recoverable minerals, and is probably reprocessed or recycled, as are the filter cakes from Process No. 12.

7. EPA Source Classification Code - 3-03-030-06.

8. References -

1. Background Information for New Source Performance Standards: Primary Copper, Lead, and Zinc Smelters. EPA-405/2-74-002a. Office of

Air and Waste Management, U.S. Environmental Protection Agency. Research Triangle Park, North Carolina. October 1974.

2. Schlechten, A.W., and A. Paul Thompson. Zinc and Zinc Alloys. In: Kirk-Othmer. Encyclopedia of Chemical Technology. Interscience Division of John Wiley and Sons, Inc. New York. 1967.

3. E. Van DenNeste. Metallurie-Hoboken-Overpelt's Zinc Electrowinning Plant. CIM Bulletin. August 1977.

4. Krupkowa, D., and A. Udrycki. New Electrolytic Zinc Plants. Chemical Age of India. August 1975.

5. Calspan Corporation. Assessment of Industrial Waste Practices in the Metal Smelting and Refining Industry - Volume II, Primary and Secondary Nonferrous Smelting and Refining. Draft. April 1975.

6. Privileged communication, EPA files.

Melting and Casting

1. Function - The process involves melting and casting the zinc from an electrolytic or pyrolytic plant into a marketable form. Pyrolytic zinc is usually in a molten state whereas electrolytic stripped zinc sheets must always be melted. Recent practice utilizes induction heating, possibly combined with a gas-fired furnace. The molten zinc is cast into 27-kilogram slabs on an in-line casting machine. Some zinc is cast into 640- to 1100-kilogram blocks in stationary molds (1).

Cathode zinc sheets from electrolytic plants are dried, melted, and cast into various forms of slab zinc. Alloys of zinc are also prepared and cast. Depending on market conditions, lead and other constituents may be added to a relatively high grade of zinc to make a select grade for galvanizing. Zinc dust is made at the plants for use in purification of solutions.

Because molten zinc exhibits a strong tendency to form dross, ammonium chloride flux is usually added to the melting furnace to retard oxidation at the surface and to collect any oxides formed. Ordinary slab zinc can be melted in a reverberatory furnace with the formation of 1 percent or less of dross; electrolytic cathodes lose 6 to 17 percent under these circumstances, depending on the presence of glue, cobalt, and the like in the electrolyte (1).

2. Input Materials - Inputs are zinc, ammonium chloride flux, and various alloying materials to meet special requirements. Quantities are not specified.

3. Operating Conditions - Melting and casting are at atmospheric pressure. Zinc must be heated above its melting point (420°C) to form liquid zinc.

4. Utilities - Gas- or oil-fired melting pots are used for melting zinc. Heat requirements are not specified. Water is used in some plants to cool the molds rapidly, but usually does not come into contact with the metal.

5. Waste Streams - Some zinc oxides and chloride compounds are emitted by the melting pots into the atmosphere; quantities are not given. To achieve high overall melting efficiency, dross is skimmed from the melting pot so that the globules of metal may be separated from thin oxide shells.

Casting cooling water generally contains suspended solids and oil and grease in the form of metal oxides, mold washes, and lubricants from casting equipment.

The only solid waste is the dross produced if the slab zinc is melted in an electrolytic furnace.

6. Control Technology - Control of atmospheric emissions is with scrubbers or fabric filters. Any processing to recover the zinc values from the control residue must deal with its chloride content. In electrolytic plants the reaction is very sensitive to the deleterious effects of chloride.

The dross is treated by liquation, centrifugal separation of metal, fluxing, etc. Recovered metal may be used to make zinc dust for electrolytic purification or it may be returned to the melting pots.

7. EPA Source Classification Code - None

8. References -

1. Schlechter, A.W., and A. Paul Thompson. Zinc and Zinc Alloys. In: Kirk-Othmer. Encyclopedia of Chemical Technology. Interscience Division of John Wiley and Sons, Inc. New York. 1967.

Cadmium Leaching

1. Function - Leaching selectively dissolves as much cadmium as possible from various cadmium-bearing dusts, fumes, and sludges from primary zinc plants, precipitating lead and other impurities without precipitating any of the dissolved cadmium. There is no separate primary cadmium industry in the United States. Cadmium recovery processes use by-products of other operations, all involving zinc, in four major categories (1):

(1) Fumes and dusts from roasting and sintering of zinc concentrates.

(2) Recycled zinc metal containing cadmium.

(3) Dusts from smelting of lead-zinc or copper-lead-zinc ores.

(4) Purification sludge from electrolytic zinc plants.

The first and fourth of these categories are of concern here, since they provide the inputs to the leaching process. The second category involves recycled zinc metal, and is not relevant here; cadmium-bearing dusts from lead and copper smelting, the third category above, are sent directly to cadmium purification, Process No. 17.

During sintering, cadmium, lead, and thallium chlorides form and are drawn off as a fume to be recovered in ESP's. After collection, the fumes and dusts are leached with dilute sulfuric acid and sodium chlorate to ensure complete dissolution of cadmium sulfide. Cadmium goes into solution by the following reaction:

$$CdO + H_2SO_4 \rightarrow CdSO_4 + H_2O$$

Sodium chlorate is a strong oxidizing agent, added to prevent reduction of any sulfur to sulfide and to prevent reprecipitation of cadmium or thallium as sulfides. Cadmium and lead are converted to sulfates and chlorides. The cadmium compounds remain in solution, but lead is almost completely converted to insoluble lead sulfate. This is filtered out and sent to lead recovery together with other insoluble materials such as quartz and silicates. The lead residue may contain small but significant quantities of gold, silver, and indium (2). More sulfuric acid is then added to the solution in order to bring the concentration up to 10 percent and to raise the temperature.

Instead of a direct leach with sulfuric acid, in at least one plant the dust is first roasted and then water leached. The sinter fume is heat-treated in a four-hearth roaster, which selectively sulfates the cadmium and makes about 90 percent of it water-soluble. The water leach that follows produces relatively pure cadmium solutions containing about 40 grams per liter cadmium and 10 grams per liter zinc. Addition of sodium bichromate to this solution removes about 90 percent of the soluble lead. The residual solids are batch treated with scrubber liquor and concentrated acid (3).

Another element in the flue dusts from roasting and sintering that is economically recoverable is thallium; this processing is not done at primary zinc smelters. One refiner in Colorado is the sole domestic producer of thallium (4).

Another source of high-cadmium residues for leaching is electrolytic zinc processing. In the purification stage, both copper and cadmium are eliminated from solution by treating the electrolyte with powdered zinc. Generally this is done in stages making possible rough separations such as high-copper and high-cadmium precipitates. Copper sulfate and arsenic trioxide may be added during these stages. The cadmium precipitate is high in zinc and contains virtually all the cadmium originally present in the electrolyte. This purification sludge constitutes the raw material for the cadmium plant. It is oxidized, either by allowing it to stand exposed to air or on a steaming platform. The acid-soluble cadmium is leached out by sulfuric acid and spent electrolyte. Filtration to remove insoluble copper may follow.

2. Input Materials - The fumes and dusts from roasting and sintering processes and the purification sludge from electrolytic plants are the primary inputs to leaching. Copper sulfate and arsenic trioxide may be added during pre-leaching purification stages. Dilute sulfuric acid and/or spent electrolytic are the leaching agents. The electrolyte contains 200 grams per liter sulfuric acid and 65 grams per liter zinc. Sodium chlorate is added to serve as an oxidizing agent, and in some plants water is used to leach the fumes and dusts. The residual solids from water leaching are batch-treated with scrubber liquor bolstered with concentrated acid. Sodium bichromate may be added to remove soluble lead; one plant reported using 7.5 grams per kilogram of cadmium product. Sixty-five grams of caustic per kilogram of cadmium produced is added (3). Quantities for other inputs are not specified.

3. Operating Conditions - Cadmium leaching takes place at atmospheric pressure. A temperature of 80°C is reached after the final addition of sulfuric acid (1).

4. Utilities - Electricity in unspecified quantities is used to pump liquids. The water leaching process requires 1.3 cubic meters of natural gas per kilogram of cadmium product to roast the dust, followed by the addition of an unspecified quantity of water (3).

5. Waste Streams - No data were found on the quantities of residuals from acid leaching, but they are probably very small. Typical analysis of this residue at one plant is 32 percent lead, 8 percent zinc, 0.7 percent cadmium, 0.13 percent indium, 0.45 percent arsenic, 0.30 percent copper, 0.23 percent silver, and 4 grams per metric ton gold. The residue may also contain other insolubles such as quartz and silicates (3). Water vapor is released from purification and leaching. An exhaust gas temperature of 60°C from leaching was reported at one electrolytic plant, which also reported exhaust gases from pre-leaching purification stages ranging from 60 to 90°C (3).

6. Control Technology - Lead sulfate is filtered out from the solution along with other insolubles. All residues are recycled. They are typically high in lead content and are sent to a lead recovery plant.

7. EPA Classification Code - None

8. References -

1. Calspan Corporation. Assessment of Industrial Waste Practices in the Metal Smelting and Refining Industry - Volume II, Primary and Secondary Nonferrous Smelting and Refining. Draft. April 1975.

2. Howe, H.E. Cadmium and Cadmium Alloys. In: Kirk-Othmer. Encyclopedia of Chemical Technology. Interscience Division of John Wiley and Sons, Inc. New York. 1967.

3. Battelle Columbus Laboratories. Development Document for Interim Final Effluent Limitations Guidelines and Proposed New Source Performance Standards for the Zinc Segment of the Nonferrous Metals Manufacturing Point Source Category. EPA-68-01-1518. Draft data.

4. Commodity Data Summaries 1977. U.S. Department of Interior, Bureau of Mines. Washington, D.C. 1977.

Cadmium Precipitation

1. Function - The purpose of precipitation is to treat the cadmium-zinc sulfate solution from the leaching process with zinc dust to precipitate cadmium as a metallic sponge and then to separate it from most of the zinc dust while the solution is agitated. To avoid excess zinc contamination, usually only 90 to 95 percent of the cadmium in solution is precipitated. The initial cementation with zinc dust may result in a liquor containing a residual 0.2 gram per liter of cadmium and 30 to 40 grams per liter of zinc. To further decrease overall cadmium discharge, the stripped liquor is heated to 40°C and recemented with 1.6 times the stoichiometric amount of zinc to reduce the liquor to 0.04 gram per liter of cadmium and 30 to 40 grams per liter of zinc (1).

The cadmium sponge is then filter-pressed. It contains about 69 percent cadmium, 30 percent moisture, and small amounts of lead and zinc (2). It is steam dried or dewatered in a centrifuge. The solution from filtration, containing practically all of the zinc added and about 10 percent of the cadmium as chlorides and sulfates, is returned to the sintering operation.

For cadmium production at electrolytic plants, the leach liquor is first filtered to remove insoluble copper introduced from the electrolyte. The filtrate is then precipitated with zinc dust in two or three stages to minimize zinc concentration in the cadmium sponge. Strontium carbonate may be added in one of these stages. The sponge will contain about 80 percent cadmium and less than 5 percent zinc. Because the electrolysis step that follows is not highly sensitive to the presence of impurities, the purification step with zinc dust is usually adequate. If further purification is desirable, cobalt may be precipitated with nitroso-2-naphthol or potassium xanthate, and thallium precipitated with potassium chromate or dichromate. The sponge is then oxidized again by steam drying to enhance the solubility of cadmium and is leached in spent electrolyte and filtered. The filtrate contains about 200 grams per liter of cadmium as sulfate and is ready for introduction into the electrolytic cells (1).

2. Input Materials - The cadmium-zinc sulfate solution from leaching and zinc dust are the principal inputs to precipitation. Strontium carbonate may be added during purification in electrolytic processing. Impurities may be removed by the addition of nitroso-2-naphthol, potassium xanthate, and potassium chromate or dichromate. Quantities for these inputs are not specified.

3. Operating Conditions - Precipitation takes place at atmospheric pressure. Temperatures range from ambient to 40°C (1).

4. Utilities - Electricity is used to pump liquids, and natural gas or oil is used to heat the stripped liquor. Quantities are not cited.

5. Waste Streams - Water vapor is released from both purification and precipitation operations at temperatures ranging from 45° to 60°C.

The filtration solution from this process contains almost all of the zinc added as well as about 10 percent of the cadmium as chlorides and sulfates (2). The purification precipitates may contain arsenic and mercury, both of which are relatively low in concentration in ores and concentrates. One plant reported that a materials balance established 8 ppm mercury and 23,000 ppm arsenic in an iron precipitate from the cadmium process, the only place where significant concentrations were found (3).

6. Control Technology - Much of the residual zinc and cadmium in the filtration solution can be precipitated by lime treatment. It has been shown that freshly precipitated cadmium hydroxide leaves approximately 1 milligram per liter of cadmium in solution at pH 8; this is reduced to 0.1 milligram per liter at pH 10. Even lower values of 0.002 milligram per liter have been shown at pH 11 (2). Evidence has been presented that high levels of iron are beneficial for removal of cadmium during lime precipitation. The resultant light slurry goes to settling ponds, where the solids can be retained for recycling. At one plant the slurry is mixed with the neutralized roaster scrubber liquor before being sent to a series of settling ponds.

7. EPA Source Classification Code - None

8. References -

1. Howe, H.E. Cadmium and Cadmium Alloys. In: Kirk-Othmer. Encyclopedia of Chemical Technology. Interscience Division of John Wiley and Sons, Inc. New York. 1967.

2. Calspan Corporation. Assessment of Industrial Waste Practices in the Metal Smelting and Refining Industry - Volume II. Primary and Secondary Nonferrous Smelting and Refining. Draft. April 1975.

3. Development Document for Interim Final Effluent Limitations Guidelines and Proposed New Source Performance Standards for the Zinc Segment of the Nonferrous Metals Manufacturing Point Source Category. EPA-440/1-75/032. Effluent Guidelines Division Office of Water and Hazardous Materials. U.S. Environmental Protection Agency. Washington, D.C. November 1974.

Cadmium Purification and Casting

1. Function - The purification and casting step purifies the cadmium sponge by melting it with a caustic flux, with distillation and perhaps redistillation, or by redissolving the sponge with sulfuric acid and collecting the cadmium by electrolysis.

In pyrometallurgical processing, the dried cadmium sponge is first mixed with coal or coke and lime. It is then transferred to a conventional horizontal-type retort, where the cadmium is reduced and collected as molten metal in a condenser. Occasionally, for ultra-purity, the metal is distilled in graphite retorts. Thallium is removed by treatment with zinc ammonium chloride or sodium dichromate. The metal may then be cast into a marketable form or further purified by redistillation. Typical impurities in the product cadmium are 0.01 percent zinc, 0.003 percent copper, 0.015 percent lead, less than 0.001 percent thallium, less than 0.0005 percent tin, and less than 0.001 percent antimony (1). Cadmium recovery has been reported as 94 percent from the feed to the leach plant and 67 percent from the zinc concentrates.

Electrolytic processing of cadmium is carried out in banks of cells similar to zinc cells. The sponge is first dissolved in dilute sulfuric acid (return electrolyte). The anodes are lead. The cathodes of cadmium are 97 percent pure and represent 90 to 95 percent total recovery of cadmium from ore to metal. Recovery in the electrolytic step is 96 percent from the cadmium sponge. The stripped cathode metal is washed, dried, and melted under a flux, such as caustic or rosin, and cast into various shapes. Total depletion of cadmium from the solution is not carried out. When the ratio of the thallium to cadmium sulfate in the electrolyte reaches 1:10, the cadmium cathodes must be removed and replaced with new insoluble cathodes. Continuing electrolysis deposits an alloy containing 5 to 20 percent thallium. These cathodes are then leached with steam and water to separate thallium into the filtrate, leaving cadmium as a residue. Small amounts of cadmium in solution are precipitated with sodium bicarbonate. Thallium is precipitated with hydrogen sulfide, then dissolved in sulfuric acid. This sulfate solution can be electrolyzed for recovery of pure sponge thallium. The sponge is washed, pressed into blocks, melted, and cast.

Processing of concentrated lead smelter baghouse dust in an electrolytic cadmium plant is similar to processing of cadmium sponge. Since the dust is generally higher in impurities than the sponge, some additional purification is necessary. The dust is mixed with sulfuric acid and water to form a paste, then calcined to a sulfated cake which is crushed and agitated with spent electrolyte. Milk of lime may be added to neutralize the solution, and sodium sulfide or impure cadmium sulfide is added to precipitate copper and other metal impurities. After filtration to remove a lead cake, an agent such as sodium chlorate oxidizes the iron and lime precipitates iron and arsenic. Heating ensures complete precipitation. Precipitated thallium chromate or dichromate is filtered off after the addition of a soluble chromate or dichromate. Excess chromate remaining may be reduced by sodium sulfide and precipitated by neutralizing with caustic. The filtered solution

is fed to the electrolytic plant. Where chlorine is present, irons high in silicon are used as anodes instead of lead. The finished cathodes are melted and cast (2).

2. Input Materials - Cadmium sponge from precipitation or lead smelter baghouse dust are the principal inputs to purification and casting. In pyrometallurgical processing, coal or coke and lime or sodium hydroxide are added, and zinc ammonium chloride or sodium dichromate is used to remove thallium. One plant reported using 65 grams of caustic per kilogram of cadmium. In electrolytic processing, dilute sulfuric acid or return electrolyte, a flux such as caustic or rosin, water, sodium bicarbonate, and hydrogen sulfide are the inputs. The cell feed may run 100 to 200 grams cadmium, 30 to 80 grams zinc, and 70 to 80 grams sulfuric acid per liter (1). Processing of lead smelter baghouse dust may entail addition of sulfuric acid, water, milk of lime, sodium sulfide or cadmium sulfide, sodium chlorate, a soluble chromate or dichromate, and a caustic, added at different stages. Quantities are not specified for any of these inputs.

3. Operating Conditions - Cadmium retorting furnaces are not pressurized. Operating temperatures of 455°C have been reported for the gas melting and ammonium chloride stages, and 790° to 910°C in the furnace itself. Electrolysis also takes place at atmospheric pressure, with the temperature held at about 30°C (1).

4. Utilities - Electricity, oil, or natural gas is used for melting the cadmium product. Air is brought into the furnace. Specific quantities were not found. In electrolysis, current density may range from 140 to 360 amperes per square meter (2).

5. Waste Streams - Particulates are released at several stages in the process. One plant reported the release of 20 kilograms per hour of ammonium chloride from fluxing and 108 kilograms per hour of cadmium from the retorting furnace (1).

Residues from retorting furnaces contain 1.5 to 6.0 percent cadmium, together with varying amounts of zinc and lead. Filter cakes may also include iron, arsenic, indium, mercury, and copper (2). Thallium is not regarded as a serious impurity since it is removed during processing. A sample of a cadmium filter cake residue was obtained from one electrolytic plant. After cadmium had been recovered from the flue dust, this waste amounted to 514 kilograms per day. Analysis was as follows: cadmium - 280 ppm, chromium - 24 ppm, copper - 1150 ppm, lead - 21.5 percent, zinc - 3.9 percent, and thallium - 40 ppm. The filter cake amounts to 1.8 kilogram per metric ton of zinc product (3).

6. Control Technology - Particulates can be controlled with fabric filter systems. The filter cake derived from purification is returned to the sintering operation. In some cases it is disposed of by open dumping or transferred to unlined ponds for liming and settling. Sludge dredged from the lagoons is stored on the ground for variable periods of time before shipment to lead smelters. No plants are known to use lined lagoons or to treat soil areas where dredged sludges are stored. In electrolytic pro-

cessing, the spent electrolyte is returned to various leaching stages in the circuit. In some cases the electrolytic cadmium process cycle is completely closed with no discharge.

7. EPA Source Classification Code - None

8. References -

1. Battelle Columbus Laboratories. Development Document for Interim Final Effluent Limitations Guidelines and Proposed New Source Performance Standards for the Zinc Segment of the Nonferrous Metals Manufacturing Point Source Category. EPA Contract No. 68-01-1518. Draft data.

2. Howe, H.E. Cadmium and Cadmium Alloys. In: Kirk-Othmer. Encyclopedia of Chemical Technology. Interscience Division of John Wiley and Sons, Inc. New York. 1967.

3. Calspan Corporation. Assessment of Industrial Waste Practices in the Metal Smelting and Refining Industry - Volume II, Primary and Secondary Nonferrous Smelting and Refining. Draft. April 1975.

SECTION 5

AIR MANAGEMENT

The most noticeable form of pollution from the primary copper, lead, and zinc industries is the discharge of materials to the atmosphere. Although mining and concentrating operations produce considerable fugitive dusts, there are no direct atmospheric discharges. Electrolytic copper refineries cause very little atmospheric pollution. It is the smelters themselves that produce trace metal-bearing particulates, metallic fumes, and SO_2 gas, all of which may be discharged into the air or lost to the surroundings as fugitive emissions. Many of the metal compounds that are volatilized by high-temperature operations escape either as fugitive emissions or by passing through dust collection systems as fume which condenses upon leaving the stack. Emissions of arsenic alone can amount to hundreds of pounds per hour where high-temperature dust collectors are used. Table 5-1 summarizes sources, quantities, and characteristics of atmospheric emissions from mining, concentrating, and smelting operations of the primary copper, lead, and zinc industries.

EMISSION CHARACTERISTICS

Almost every smelting process produces atmospheric emissions, and despite the variety of processes, many of the emission streams have common characteristics. In production of these metals, an ore concentrate is heated to a high temperature. Solid particles are entrained in the exhaust gas and are carried from the process. Sulfur in the ore concentrate burns to form SO_2. Pyrometallurgical operations vaporize metallic elements in the concentrate, including antimony, arsenic, boron, cadmium, lead, mercury, selenium, tellurium, vanadium, and zinc. The composition of these emissions varies widely and depends mainly on the specific ore and the type of smelting operation. The metallic constituents in the emission stream are characterized by their small particle sizes; usually less than one micron. Little quantitative data on particulate composition as a function of particle size are available. However, since most of the trace metallic compounds condense from the vapor state, the more volatile metals tend to form a major portion of the finer particulate. An illustration of this trend is shown in Table 5-2 for samples collected in a flue serving a copper ore roaster and arsenic plant after large particulate has settled out. These data are not necessarily representative of other plants and processes since this ore had a high arsenic content, but the trend to higher metallic content in the fine fraction is evident.

TABLE 5-1. ATMOSPHERIC EMISSIONS FROM MINING, CONCENTRATING, AND SMELTING OPERATIONS

Process	Waste	Characteristics	Quantities	Control
COPPER				
Mining	Dust	Characteristics of ore being mined	~110 kg/metric ton ore	-
Concentrating	Dust	Characteristics of ore being mined	~1 kg/metric ton ore	Cyclone separators, fugitive dust uncontrolled
Multiple hearth roasting	Roasting gas	SO_2, particulates	0.5 to 2% SO_2	Cyclone collectors, precipitators, H_2O spray
Fluidization roasting	Roasting gas	SO_2, particulates	12 to 16% SO_2	SO_2 for production of H_2SO_4, wet scrubbers, ESP
Drying	Dust	Same composition as ore	-	Wet scrubbing
Reverberatory smelting	Smelting gas	SO_2, particulates, Zn, Ca, Mg, etc. fugitive dust	0.5 to 2.5% SO_2, between 14 and 40 kg particulate/metric ton copper. Largest amount of dust produced of processes	ESP, no control for SO_2
Electric smelting	Off-gas	SO_2, some particulates	3 to 8% SO_2	H_2SO_4 production
Flash smelting	Off-gas	SO_2, particulates	10 to 20% SO_2, 6 to 7% (part.) of feed	H_2SO_4 production, cyclones, ESP, etc.
Peirce-Smith converting	Off-gas	Particulates, SO_2 (see Table 2-26)	4 to 10% SO_2	H_2SO_4 production
Hoboken converter	Off-gas	SO_2, particulates	At least 8% SO_2	H_2SO_4 production
Noranda	Off-gas	SO_2, particulates	Low SO_2 content	ESP
Slag treatment	Off-gas	Particulates, Zn and other element fumes	-	-
Contact sulfuric acid plant	Off-gas	SO_2, fine mist H_2SO_4	0.01 to 0.5% of 34,000 to 68,000 m^3/hr	None for SO_2 mist eliminators or ESP for H_2SO_4 mist
DMA SO_2 absorption	Exit gas	SO_2, dilute H_2SO_4 mist	-	None usually required for SO_2 ESP for acid mist

(continued)

TABLE 5-1 (continued).

Process	Waste	Characteristics	Quantities	Control
Elemental sulfur production	Exit gas	Possibly slight H_2S, SO_2 possibly fugitive dust from sulfur	No more than 0.7% SO_2	Wet scrubbing
Arsenic recovery	Exit gas	Fugitive dust, small amounts of SO_2 and arsenic fumes, particulates in off-gas	-	Fabric filter for fugitive dust, ESP
Fire refining and anode casting	Off-gas	Zn, Cd fumes, SO_2, particulates	0.38 kg SO_2/metric ton Cu treated, 5 to 20 kg particulate/metric ton Cu produced	None
Electrolytic purification	Fugitive gas from liberator cell	AsH_3 oxidizing to AsO_3	-	Can be scrubbed
Slime acid leach	Gas evolution from Cu and H_2SO_4	SO_2	Small	None
$CuSO_4$ precipitation	Gas evolution from Cu and H_2SO_4	SO_2	Small	None
Slimes roasting	Off-gas	Mineralized particulates and fumes, SeO_2, SO_2	-	Scrubber
Doré furnace	Off-gas	Particulates, Se, As, etc.	-	Wet scrubber
Scrubber	Exit gas	Particulates, furnaces not removed. Selenium major constituent	-	ESP
Heap and vat leaching	Fugitive dust	-	-	-
Sulfation roasting	Off-gas	Particulates, metallic fumes, SO_2	Considerably less than conventional roaster	Acid plant
Sponge iron plant (not yet in operation)	Off-gas	Particulates, volatile metal fumes expected	-	Unknown
CLEAR reduction	Off-gas	Some HCl acid vapor, fugitive dust	-	Scrubbing with alkaline solution
CLEAR regeneration	Off-gas	HCl acid vapor, entrained materials	-	-
CLEAR oxidation	Off-gas	HCl acid vapor could be produced (details not disclosed)	-	Scrubbing with alkaline solution

(continued)

TABLE 5-1 (continued).

Process	Waste	Characteristics	Quantities	Control
LEAD				
Mining	Dust	Typical of ore being mined	110 g/metric ton ore	Water sprays (manual)
Concentrating	Dust	Typical of ore being crushed	3.2 kg/metric ton ore processed	Cyclone separators; fugitive dust uncontrolled
Sintering	Flue dust	Pb, Zn, S plus Sb, Cd, Ge, etc., SO_2, traces HF, SiF_4	See Table 3-12 100 to 250 kg particulate/metric ton ore produced	Acid plants, particulates collected by baghouses or ESP
Acid plant		Same as Copper		
Blast furnace	Effluent gas	Particulate (oxides, sulfides, sulfates of metals present) dilute SO_2	125 to 180 kg particulate/metric ton produced	See Table 3-21
Slag fuming furnace	Effluent gas	Low SO_2, high particulate, fumes of volatile components	20.02 volume percent SO_2	Baghouse
Drossing	Off-gas	Low SO_2, volatile components of lead bullion	1.0 to 21.7 g/m^3 off-gas (7)	Baghouses or ESP
Dross reverberatory furnace	Effluent gas	Particulate, SO_2, SO_3, nitrogen compounds	SO_2 <0.05%	Baghouses or ESP
Cadmium recover	Effluent gas	Particulate, fume, data not reported	-	Recycle, baghouse
Reverberatory softening	Effluent gas	No data reported	-	None reported
Antimony recovery	Effluent gas	Oxide fumes	-	ESP or baghouse
Retorting	Effluent gas	Probably metallic fume (Zn, As, Pb) particulate. No data were found	-	Baghouse
Cupelling	Exhaust gas	Metallic vapors (Zn, Pb, etc.) particulate. Data not given	-	Baghouse
Bismuth refining	Exhaust gas	Cl, metallic fume	-	None

(continued)

TABLE 5-1 (continued).

Process	Waste	Characteristics	Quantities	Control
Zinc				
Mining	Dust	Characteristics of ore mined	0.1 kg/metric ton ore	-
Concentrating	Dust	Characteristics of ore mined	1.0 kg/metric ton ore	Cyclones
Multiple hearth roasting	Effluent gas	SO_2, particulate (fumes and dust)	6.3 m^3 to 11 m^3 SO_2/mine	To Cottrell and acid plant
Suspension roasting	Effluent gas	SO_2, particulate (fumes and dust)	Higher than above	ESP, acid plant
Fluidized bed roasting	Effluent gas	SO_2, particulate (fumes and dust)	Higher than above	ESP, acid plant
Sintering	Effluent gas	SO_2, particulate (fumes and dust)	Very low SO_2; 9 to 100 g part./m^3	No SO_2 control, settling flues ESP's, baghouses for particulates
Horizontal retorting	Effluent gas	Particulate (zinc oxide, cadmium, copper, etc.), SO_2	8 kg particulate/metric ton Zn produced, very low SO_2	Wet scrubber
Vertical retorting	Effluent gas	Particulate (zinc oxide, cadmium, copper, etc.), SO_2	50 kg particulate/metric Zn produced. Very low SO_2	Wet scrubber
Electric retorting	Effluent gas	Particulate (zinc oxide, cadmium, copper, etc.), SO_2	10 kg particulate/metric Zn produced. Very low SO_2	Impingement scrubbers
Oxidizing furnace	Effluent gas	Combustion produced, Zn oxide	Similar to above	Similar to above
Electrolysis	Fugitive	H_2SO_4 mist, particulate (thought to include Zn, Pb, Cd, As)	Est. 3.3 kg particulate/ metric ton Zn	Electrolyte covers, additives for H_2SO_4 mist
Melting and casting	Fugitive	Zn oxides, chloride compounds	-	Scrubbers or fabric filters
Cadmium purification and casting	Flue dust	Particulates (Cd, Cu, Pb, etc.)	514 kg/day	Fabric filter

TABLE 5-2. ELEMENTAL ANALYSIS OF PARTICULATE SIZE FRACTIONS

Average particulate size, μ	% by weight of sample[a]					
	Total	As	Pb	Cd	Ni	Sb
14.3	42.6	0.3	0.14	0.003	0.06	0.05
7.5	3.4	5.6	-	0.07	0.71	0.45
4.6	3.8	18.3	-	0.08	0.77	0.08
2.3	16.7	10.5	3.5	0.03	0.22	0.13
1.3	13.5	16.1	1.4	0.05	0.18	0.11
0.58	10.7	13.2	3.7	0.15	0.28	0.38
0.11	3.3	18.8	48	0.25	0.32	0.05
<0.11	5.8	10.6	14.8	0.37	1.3	2.6

[a] Data collected by Puget Sound Air Pollution Control Agency. August 14, 1975.

All of the major pyrometallurgical processes release hot waste gases that contain inorganic particulates, metallic fumes, SO_2, and combustion products. The gas streams contain no significant quantities of organic material, oxides of nitrogen, or carbon monoxide. Smelter gas streams are characterized as rich or lean in regard to their SO_2 content, with lean streams containing less than about 4 percent SO_2. Gases from several processes within a smelter are frequently combined prior to control. It is not unusual for the principal exhaust gas stream produced at a smelter to be composed of gases from all the major processes. Other waste streams, containing fewer particulates and less SO_2, are usually vented separately with or without treatment. This practice of combining several waste streams allows the use of a few atmospheric emission control devices; each, however, may be a large piece of equipment.

The combining of waste streams creates a problem in air management, since it can cause overloading of the control equipment. Most conventional pyrometallurgical processes are batch operations, with gaseous emissions that are not uniform. Unless the operations are carefully sequenced, both the flow rate and pollutant loadings of the waste gases can be highly variable. Control devices are not usually sized to handle simultaneously the peak loads from all the processes; metallurgical operations therefore can result in excessive emission rates. Smelter emission streams generally have a high opacity due to the formation of sulfuric acid mist and the fine particulate present.

The primary copper industry represents the most significant source of atmospheric emissions, both SO_2 and particulate, in the primary nonferrous industries. Most copper is produced in older plants with technologies that have been in use for 50 years. Polluting process technologies such as multiple-hearth roasters and reverberatory furnaces are only slowly being replaced. In addition, the retrofit of controls is difficult and merely shifts the problem of trace metals to problems of water pollution or solid waste disposal. The primary lead industry is also a significant source of trace metal particulate emissions, and SO_2 emissions are only about 50 percent controlled. This industry faces similar retrofit problems as primary copper, and adequate control would create additional problems with recovery and disposal of solid residues. The primary zinc industry presents the fewest atmospheric problems. Many older plants have closed in recent years, and changes in process technology have allowed effective particulate control with available equipment. An increase in the use of electrolytic processing has reduced the potential for release of SO_2, and most sulfur is removed as a concentrated stream in the roaster and converted to sulfuric acid.

EMISSION CONTROL SYSTEMS

Particulate Control

Control of waste gas in a smelter is a multi-step process. The first step is always to capture and cool the gases so that they can be passed through ductwork and control equipment of standard construction. Flue gases frequently leave a pyrometallurgical process at temperatures of 1000°C or

higher. Some of this heat may be recovered in a waste heat boiler, reducing the gas temperature slightly. Only a limited amount of heat can be economically recovered in this way, however, since a smelter does not require large quantities of steam.

For further reduction of gas temperature, dilution with ambient air, radiation coolers, and water sprays is used. Smelters usually have very tall exhaust stacks to create a strong natural draft and thus allow a large quantity of cool air to be drawn into the gas stream. Design of smelter equipment has evolved with the assumption that tightly sealed ductwork is frequently not desirable. For example, copper converters have been designed for use with a loosely fitted hood with the intent that large quantities of dilution air would mix with the converter gases. Reverberatory furnaces have been designed so that natural drafts would keep the furnace under a slight vacuum to prevent emissions from the charging and tapping ports.

The second step in control of waste gases is the removal of larger particulates. Most larger solid particles entrained in the gas streams are composed of raw and product materials, usually in amounts too great to discard economically. Larger particles typically contain fewer impurities than fine particles. Gravity settling is used to collect these large particulates. Special balloon flues or settling chambers are installed to reduce gas velocity enough for their collection, with the collected particles directly recycled to the process operations. The settling chambers also act to further cool the gas, since they are not insulated and lose considerable heat by radiation to the atmosphere.

These first two steps in control of waste gases can be considered as processing operations since their principal function is not to minimize air pollution but to prevent product loss. The third step involves removal of fine particulates through the use of fabric filters and electrostatic precipitators, with or without additional cooling.

An electrostatic precipitator (ESP) is usually described either as a "hot" ESP or a "cold" ESP. The hot version handles the gas at temperatures up to 370°C, collecting the particulates as a dry dust. The cold ESP system utilizes additional gas cooling via radiation or water sprays to cool the gas stream to about 150°C prior to collection. Selection of one type rather than the other depends largely on both the final disposition of the gas and the plant layout. If the stream is to be used to feed a sulfuric acid plant, the gas must be scrubbed for more complete removal of particulates and fumes. If the gas is not processed for sulfur recovery, cooling is not required and the use of a hot ESP is more common.

Fabric filters are also utilized for fine particulate control, especially at zinc and lead smelters. Baghouse installations usually require additional cooling of the gas to meet the temperature limit of the filter fabric (approximately 260°C). To prevent acid condensation, the stream is not cooled to its dew point.

ESP's and fabric filters can achieve collection efficiencies in excess of 95 percent and with careful design and operation, in excess of 99 percent. ESP's, and to a lesser extent fabric filters, lose efficiency rapidly for particles less than 0.2 micron in diameter. Table 5-3 presents an analysis of selected trace element emissions in particulate matter from the ESP on a copper smelter reverberatory furnace.

Trace metal compounds such as arsenic, antimony, and cadmium are volatilized during high-temperature operations and enter the dust collection system as fume. Because of inefficient control equipment and condensation of the fume after the gas stream has passed through the collectors, stack gases may contain significant quantities of trace metals. Recently field trests have indicated that this condensation may be the single largest source of trace metal emissions at smelters. High-temperature ESP's used at many copper smelters cannot be expected to effectively control volatile metals. The condensation problem is not as great at lead and zinc smelters, where particulate collection systems are operated at lower temperatures.

Particulate collected by an ESP or baghouse is recycled or discarded depending on its value. Many trace elements such as arsenic and cadmium tend to concentrate in the fine particulate fraction. All zinc smelters process particulate to recover cadmium. One copper smelter processes the particulate to reclaim part of its arsenic content.

Atmospheric emissions from refinery operations are minor when compared with those from pyrometallurgical process steps. However, many of the refining operations are uncontrolled, and even where control devices are employed, their efficiency in collecting volatile metals has not been demonstrated.

SO_2 Control

The final step in treatment of some smelter waste gases is removal of SO_2. The U.S. copper industry has not achieved complete SO_2 removal, although progress is being made. In many cases, smelter operators have relied on dispersion of SO_2 into the air through tall stacks to minimize the ground-level concentration of SO_2 in the vicinity of the smelter. Even the newest smelters are being built with very tall stacks constructed of corrosion-resistant materials for the purpose of ameliorating local air pollution by dilution.

Air dispersion, however, is not an effective substitute for SO_2 control, and for management of SO_2 in smelter gases, plant waste streams can be divided into only two classes - those that are suitable for sulfur recovery, usually in the form of sulfuric acid, and those that are not.

Sulfuric acid plants require a clean gas stream which averages at least 4 percent SO_2 for efficient operation. If the gas stream meets this requirement, sulfuric acid manufacture via the double contact process represents the best currently available control technology.

TABLE 5-3. SELECTED TRACE ELEMENT EMISSIONS IN PARTICULATE MATTER FROM THE ELECTROSTATIC PRECIPITATOR ON A COPPER SMELTER REVERBERATORY FURNACE (1)
(kg/hr)

Element	Test 1	Test 2
Arsenic	34.5	63.5
Fluorine	4.3	3.5
Copper	0.8	0.5
Selenium	0.29	0.44
Antimony	0.01	0.15
Molybdenum	0.1	0.1
Nickel	0.01	0.1
Lead	0.2	0.1
Zinc	0.1	0.1
Cadmium	0.04	0.01

Prior to acid manufacture, the gas stream must be conditioned to remove any residual particulate matter. This is accomplished in a series of scrubbers and electrostatic precipitators. Particulate removed in these steps forms a sludge which must be disposed of or recycled to the smelting process. The remaining gas stream and the final acid plant tail gas contain essentially no particulate matter. Acid plant emissions contain less than 0.05 percent and 0.2 percent SO_2 for a double and single contact plant, respectively. For even more effective control, any Japanese smelters clean the tail gas from acid plants in scrubbers. Exit gas often contains 0.005 percent SO_2 or less, and concentrations of no more than 0.001 percent SO_2 have been reported at some facilities (2).

Sulfuric acid manufacture requires not only a high concentration of SO_2 but also a stream that is reasonably constant in both composition and flow rate. Increased attention to the correct sequencing of batch operations and instrumentation to prevent sudden changes in flow or composition has allowed some smelters to more efficiently produce sulfuric acid.

If the gas stream averages less than approximately 4 percent SO_2 (or 2.5 percent as the absolute minimum, according to some advertised claims), control via wet scrubbing with a chemical solution could be implemented. Two or three copper smelters have incorporated a DMA absorption plant. This process can be used to produce a concentrated stream of SO_2 for export or as a buffer between the smelter and the acid plant to absorb surges in SO_2 production and to release SO_2 to the acid plant during periods of low production. These scrubbing systems also utilize gas conditioning systems which remove essentially all particulate matter.

Best air management in a smelter, therefore, consists of modifying pyrometallurgical processes and waste gas control equipment to produce a gas stream rich in SO_2 suitable for acid manufacture. As of November 1977, thirteen of the sixteen primary copper smelters were operating sulfuric acid plants, the majority of which had been built since 1970. Two are operated in conjunction with DMA units. Ground had been broken for construction of an acid plant at one other copper smelter, the second smallest in the industry, but work had stopped because of litigation. Four of the six primary lead smelters had acid plants, the newest of which started operation in October 1977. Of the two uncontrolled lead smelters, there were plans for an acid plant at one (expected completion - 1979), and none at the other, the smallest plant in the industry. All six primary zinc smelters had acid plants.

Improvements in ore concentration have eliminated the need for most multiple-hearth roasters in both the copper and zinc industries. Newer processes have been adopted that use less fuel and yield more concentrated exhaust streams. Oxygen enrichment has been utilized in a number of smelter operations and may soon be used more commonly. This practice also produces more concentrated exhaust streams.

Less fundamental changes have been made at some smelters and could be used at others to minimize the dilution of waste gas streams. These changes are directed toward minimizing infiltration of outside air and substituting other methods for cooling the gas stream. Copper converters formerly operated with as much as a 30-centimeter gap between the converter and the hood. Substitution of water-cooled hoods allows a significant reduction of this gap. Replacement of some ducts with new ones made of high-temperature alloys has minimized the need for infiltration air. Water-spray chambers have been installed to cool the gas stream. At some plants, holes and leaks in the ductwork have simply been repaired.

Weak SO_2 bearing streams could be controlled via caustic scrubbers. In this country, no smelter gases are scrubbed for SO_2 removal except for those utilizing the DMA process. In other countries, smelters employ caustic scrubbing techniques similar to those used in this country with flue gases from coal-fired boilers. In one Japanese copper smelter, waste gases are segregated into two streams, one with high SO_2 content that is sent to an acid plant and one with low SO_2 content that is sent to a wet scrubber. The scrubber treats all process gases before discharging them to the atmosphere, including acid plant effluent, fire refining furnace flue gas, and ventilation fan discharges that collect fugitive SO_2 emissions. More than 99 percent of the sulfur that enters with the concentrate is contained. Other flue gas desulfurization systems may also be employed. Use of organic acid derivatives, such as salts or citric or lactic acid, has been investigated for use as absorbents. A smelter in Sweden has installed a system using citric acid absorption in combination with steam stripping for SO_2 recovery. The U.S. Bureau of Mines, Salt Lake City, has developed the Citrate process. A Canadian smelter uses a liquid ammonia solution as an absorbent to produce either a concentrated SO_2 stream for further processing or ammonium sulfate for fertilizer.

The Wellman-Lord SO_2 recovery process makes use of a sodium sulfite scrubbing liquor. Contact with SO_2 converts the sodium sulfite to bisulfite which is later heated for regeneration and concentrated SO_2 liberation. The system has been applied to sulfuric acid plants and coal-fired boilers but not a metallurgical process.

Lime/limestone and magnesium oxide absorbent systems are in operation at Japanese smelters. These scrubbing systems are used at many coal-fired boilers in the country. Many process variations are in operation in Japan utilizing several types of additives to improve absorption efficiency. Aluminum sulfate scrubbing is also practiced at two Japanese smelters.

FUGITIVE EMISSIONS

Fugitive emissions consisting of gaseous and particulate matter include all atmospheric emissions that are not contained in a vent. These emissions occur from raw materials handling and sizing operations, storage piles, roadways, mining areas, slag piles, leaks in process equipment, inadequate hooding systems, and during furnace charging, slagging and tapping operations. Even semi-quantitative data on smelter fugitive emissions are sparse since these emissions are very variable and depend on many factors including:

- In-plant maintenance
- Plant and yard housekeeping practice
- Type of furnaces
- Smelter throughput
- Fume hood systems and draft
- Care in process operation
- Rainfall and wind patterns
- Feed composition

The effect of these emissions on ambient air quality may be appreciable since they are emitted near ground level.

As described earlier, the SO_2 content of exhaust gas streams is maximized by preventing the infiltration of air into process exhaust ventilation equipment. The elimination of dilution air may, however, cause increased fugitive emissions of fumes, particulates, and SO_2 around furnace openings. Thus, efforts to strengthen a gas stream to enhance pollution control may result in deterioration in the workplace environment.

Fugitive emissions from pyrometallurgical processing equipment can be greatly reduced through the use of hoods, enclosures, and exhaust systems for charging and tapping operations. These devices can be vented through particulate control devices and into the final discharge stack. Furnace configuration and movement of the ladles to tap and charge various types of furnaces present design difficulties and maintenance problems. Three U.S. copper smelters now utilize fixed secondary hoods on their converters (3). Some Japanese converters are equipped with swing-away secondary hoods, while at other smelters in that country, the converter aisle is mechanically ventilated with the exhaust from the entire building discharged through a baghouse. This latter approach permits complete capture of converter emissions. Although a potential problem with this type of system is providing adequate ventilation for workers, no ventilation problems have been reported at this smelter (2,3). One U.S. copper smelter has recently installed a building evacuation system.

Particulate emissions from sources such as materials handling, roadways, and slag piles may be reduced through use of covered conveyors, enclosures and storage buildings, spray-wetting systems, frequent sweeping and good plant housekeeping practices.

Technology is available for all phases of fugitive emission control, but successful application of this technology requires a complete engineering study rather than a piece-by-piece approach. The most critical design point is the application of hoods and suction vents to collect emissions from point sources of fugitive emissions. Experience has shown that cross-currents of air past a hood can seriously affect its efficiency; no hood design is complete unless provision is made for control of all air movements in the vicinity.

References

1. Spaite, P.W., and M.J. Stasikowski. Overview of Environmental Impacts Associated with Production of Nonferrous Metals. Prepared for Industrial Environmental Research Laboratory, U.S. Environmental Protection Agency. Cincinnati, Ohio. December 1977.

2. Evaluation of the Status of Pollution Control and Process Technology - Japanese Primary Nonferrous Metals Industry. Prepared by PEDCo Environmental, Inc. for U.S. Environmental Protection Agency. Contract No. 68-02-1375, Task 36. July 1977.

3. PEDCo Environmental, Inc. Secondary Hooding for Peirce-Smith Converters. U.S. Environmental Protection Agency. Contract No. 68-02-1321, Task 47. Draft. December 1976.

SECTION 6

WATER MANAGEMENT

Pollution of water by an industrial operation arises from three fundamental causes. Liquids may be intentionally discharged into natural waters; these are the direct process wastes, easily quantified and recognized. Liquids may also accidentally enter a watercourse in the form of fugitive losses, difficult to quantify or predict. Finally, solids or gases may be discharged that enter otherwise contaminated waters. These are secondary sources, frequently the most difficult to locate and control.

The primary copper, lead, and zinc industries contribute water pollution of all three classifications. However, few direct process wastes are liquids; the major industry wastes are solids and gases. Each of the few processes that have predictable discharges of clearly-recognized liquid wastes is discussed in this report in connection with the specific process.

Opportunities for fugitive liquid losses are limited in these industries. Direct liquid wastes result from a number of process steps at the smelters. As with gaseous emissions, individual liquid streams are typically combined prior to treatment. Many impurities in the concentrates either result in slags or furnace residues or are volatilized to be captured in dry air pollution control devices ore released to the atmosphere. However, where wet scrubbers are used, as in the precleaning of gas streams prior to sulfur recovery, metal compounds and organics accumulate in the scrubber water bleed streams that must be discarded as they become contaminated. Because lead smelters are located in areas of high precipitation, water containing flotation agents is discharged from tailings ponds to surface waters during parts of the year. Because of the relative effectiveness of air pollution control, wastewater may constitute the principal environmental problem at primary zinc smelters. As with any other industry involving liquid-handling, control at smelters must be through the provision of facilities to capture and recycle or treat process discharges or any accidental losses.

The major threat to water quality from these industries is secondary pollution from the vast quantities of minerals that are extracted from the earth and artificially exposed to the environment. Drainage from nonferrous mines, whether surface or underground, is often acidic in nature. It has become increasingly evident that abandoned mines may constitute as great a hazard as active mines. Wastewater from concentrating operations contains metals, sulfur, and organic compounds and as with mining, the effectiveness of treatment practices has not been established. Hydrometallurgical copper

operations produce similar liquid wastes, both in the form of spent leach liquor and runoff from stored residues. The remainder of this section is a detailed examination of the character and control of these problems, centering on sulfide ores, recognized as a major contributor to water pollution.

Table 6-1 summarizes sources, quantities, and characteristics of liquid effluents from mining, concentrating, and smelting operations of these three industries.

SOURCES OF SECONDARY WATER POLLUTION

Many elements appear in the wastewaters from the primary copper, lead, and zinc industries. Sulfide ores will contain one or more of the following elements: iron, nickel, copper, zinc, lead, arsenic, antimony, bismuth, cadmium, selenium, silver, gold, manganese, and tellurium. In addition, molybdenum and rhenium are frequently present in some copper ores and germanium is found in Missouri lead and zinc ores. The platinum group of metals is recovered from electrolytic slimes. Indium, gallium, thallium, cobalt, and tin are found in some copper and zinc concentrates. Mercury and chromium appear in some water analyses from smelting operations. The common rock-forming elements of calcium, magnesium, aluminum, the alkali metals, and silicon undoubtedly occur closely associated with all metal ores. Stack particulates from a copper reverberatory furnace were found to contain boron, barium, and vanadium.

In the mining, concentrating, and smelting of sulfide ores, five sources of impurities in water can be identified:

1. In the operation of either a surface or an underground mine, wastewaters will be produced that must be pumped or drained from the workings. Some of this water will be brought into the mine for equipment cooling, dust control, and as life support for the miners. The remainder will be the result of natural seepage, or in the case of a surface mine, from precipitation.

2. Waste rock, or spoil, is produced during the mining process as overburden in the construction of shafts and tunnels, or as low grade inclusions found within the ore body. It is disposed of near the mine workings. The spoil generally contains appreciable amounts of sulfide minerals, and may occasionally be rich in unwanted "outrider" deposits of metals other than the one being produced. With greater or lesser attention to the environmental effects, these spoils are placed where they are exposed to rainfall, seepage, and surface run-off.

3. In mining the main ore body, stockpiles of ore are frequently placed either near the mine or near the mill, or both, in order to avoid having to synchronize operations of these two processes. Stockpiles are also exposed to the weather, and in some cases are purposely hosed down to minimize blowing dust.

TABLE 6-1. SOURCES OF LIQUID EFFLUENTS - MINING, CONCENTRATING, AND SMELTING OPERATIONS

Process	Waste	Characteristics	Quantities	Control
COPPER				
Mining	Seepage, runoff	More highly mineralized and acidic than normal surface water; likely to contain heavy elements found in ore body	Open pit: 0-0.3 m^3/metric ton (7) of ore Underground: 0.008 to 4 m^3/metric ton	Little control other than site selection for mine spoil dump
Concentrating	Ore flotation water	Heavy elements plus thiosulfates, thiomates, organic and inorganic flotation additives	100 to 500 m^3/ton of concentrate (2)	Tailings ponds, little other control
Reverberatory smelting	Runoff from slag granulation	Highly variable, heavy elements, sulfate (see Table 2-20) open body of water	-	To tailings pond if waste produced
Electric smelting	Similar to above	Similar to above	-	Similar to above
Sulfuric acid plant	Weak sulfuric acid	-	4 to 8 m^3/10 m^3 gas	Neutralized, or other (see Table 2-29)
DMA SO_2 absorption	Water solution	Sulfites, sulfates, suspended solids, minerals, DMA	-	Reuse in other processes
Arsenic recovery	Plant washdown	Ag, Cu, other metals, oil and grease	See Table 2-30	Tailing pond
Fire refining and anode casting	Anode cooling water	Ag, Cu, Zn	4000 to 13,000 ℓ/metric ton metal produced. see Table 2-33	Recycle, other processes see Table 2-34
Electrolytic refining	Electrolytic solution	Sulfuric acid, other metals (see Table 2-35)	-	Reclamation, or pond evaporation
Electrolytic purification	"Black acid" and electrolytic evaporate	Heavy elements, low pH	-	Tailings pond
Vat leaching	Sluice water circulating stream	Comparable to concentrator plant rich in iron	350,000 to 1,000,000 ℓ spent liquor per metric ton Cu produced	Tailings pond

(continued)

TABLE 6-1 (continued).

Process	Waste	Characteristics	Quantities	Control
Sulfide ore leaching	Sluice water circulating stream	Comparable to concentrator plant rich in iron	350,000 to 1,000,000 ℓ spent liquor per metric ton Cu produced	Tailings pond
CLEAR regeneration	Sluice H_2O	-	-	Settling pond
CLEAR oxidation	Sluice water	-	-	Settling pond
LEAD				
Mining	Seepage, runoff, utility use	Dissolved and suspended solids reflecting composition of ore	Variable	Liming and impoundment
Concentrating	Tailings slurry	Small amounts of heavy metal in solution high pH (8.5 to 11) (see Table 3-6)	4 m^3/metric ton ore	Tailings pond, biotic control
Acid plant	Weak sulfuric acid	-	4 to 8 m^3/10 m^3 gas	Neutralized or other
Blast furnace	Granulating H_2O	-	-	Concrete settling pits (see Table 3-25)
Slag fuming furnace	Granulating H_2O	-	4 to 8 m^3/10 m^3 gas	Concrete settling pits (see Table 3-25)
Final refining and casting	Cooling water	Particulate matter (lead and lead oxides)	-	Recycled, or tailings pond or liming
ZINC				
Mining	Seepage, utility uses, runoff	Pb, Zn, associated minerals; metals found in ore body	-	Essentially same as copper and lead
Concentrating	Flotation water	Tailings, unseparated minerals, flotation reagents	1000 to 16,000 m^3/day	Lime precipitation, settling ponds, sometimes sulfide precipitation

(continued)

TABLE 6-1 (continued).

Process	Waste	Characteristics	Quantities	Control
Vertical retorting	Gas wash water	Zn and other metal oxides, possibly hydrocarbons, hydrolysis products	-	Settling pits
Electric retorting	Gas wash water	Zn and other metal oxides, possibly hydrocarbons, hydrolysis products	-	Settling pits
Oxidizing furnace	Gas wash water	Zn and other metal oxides, possibly hydrocarbons, hydrolysis products	-	Settling pits
Leaching	Spent leaching solution	-	-	-
Melting and casting	Cooling water	Suspended solids, oil, grease	-	-
Cadmium leaching	Probably very small	-	-	-
Cadmium precipitation	Filtration solution	Zn, cadmium chlorides and sulfates	-	-

4. In one of the major processing operations, ores from the mine are very finely ground and circulated through equipment as a slurry in water. This process concentrates minerals containing the desired metals into a usable fraction. A continuous bleed of this milling and flotation water is necessary, and the dumps or ponds containing the tailings are subject to rainfall and seepage.

5. In the smelters, fugitive losses of concentrates and their decomposition products are common. Fugitive losses of dusts with similar characteristics are also frequent. These materials are exposed to rainfall, and may also be hosed down in attempts at housekeeping.

Unless controlled, water from all these sources will follow the natural drainage pattern of the area and enter natural watercourses. All these waters share the characteristic of having been in contact with sulfide minerals, and to some degree, all of them will be more highly mineralized than normal surface waters of the area, containing especially the sulfate ion. They will be likely to contain measureable amounts of one or more of the heavy elements found in the ore body, and will be more acidic than normal surface waters of the area. The only exception is concentrator effluent, which, as a result of treatment, is neutral or alkaline. This effluent has a very high suspended solids loading, and also contains various flotation and decomposition chemicals.

CONCENTRATOR EFFLUENT

The most easily observed source of potential water pollution is the process water used for ore concentration. The flotation process requires water in large quantity. After being used to separate a fraction of high grade ore, the water is sluiced into a pond, carrying with it the waste rock. Volumes of both water and waste rock are very large. As much as 80 percent of all the ore mined is thrown away as tailings, and two-thirds or more of the water used by the industry is in the concentrator plant. Some of the overflow of the tailings pond is recycled back to the mill or concentrator. Most economical operation of the flotation process requires a recycle, and in arid regions, economy frequently dictates the maximum possible percentage. There is, however, a limit to the amount that can be recycled, since soluble minerals in the ore, organic matter, and chemicals added for processing all accumulate. If their concentrations get too high, flotation is inefficient.

With the added incentive to minimize water discharges, most flotation mills have approached this maximum limit of recycle. It is unlikely that further reduction in volume of waste water from the concentrator will be possible unless the industry adopts better waste segregation practices or more complete waste treatment before recycle.

Many of the materials added to the water in the concentrator are of increasing concern in the management of wastes. At some milling operations, high concentrations of partially oxidized sulfur compounds such as thiosalts and thionates are produced. Some concentrators also discharge quantities of cyanide salts and organic compounds. These materials must be biochemically

oxidized if they are not to appear in the plant effluent. Some of these materials oxidize only with difficulty and will not decompose in a simple settling pond.

Various proposals have been advanced on how best to handle and treat effluent from the concentrator, but at best these are theoretical exercises. The fact is that in those industries it is the almost unanimous practice to combine all waste streams into one. Water from mines, acid seepage, storm drainage, plant floor drains, and even sewage from plant facilities all are run together, and in most installations are discharged into the tailings pond. This is in many cases regrettable, but any proposals to modify the waste management practices of these industries must start with the consideration that waste waters now exist as a combined stream.

SULFIDE WEATHERING

The mechanism by which sulfide minerals enter water solution has been extensively studied, in connection with both sulfide ore mining and the sulfide content of the Appalachian coal mines. It is thought that contamination of drainages with acid and heavy metals starts with iron pyrite (FeS_2) (1). This is the most common mineral in all sulfide ores. When this mineral contacts both water and air, it oxidizes to produce soluble ferrous sulfate and sulfuric acid:

$$2\ FeS_2 + 2H_2O + 7O_2 \rightarrow 2\ FeSO_4 + 2H_2SO_4$$

The ferrous iron may oxidize further to form insoluble ferric hydroxide and still more acid:

$$4\ FeSO_4 + O_2 \rightarrow 4\ Fe(OH)_3 + 4\ H_2SO_4$$

Other reactions may form a complex sulfate, or jarosite, thus adding another quantity of acid.

These reactions take place naturally in any outcrop of a sulfide mineral and are the natural weathering reactions of pyrite. If the outcrop is undisturbed, they take place slowly and the acid is quickly neutralized by reaction with other minerals or with the natural alkalinity in surface water. The iron hydroxide remains virtually in place, changing slowly into the mineral limonite.

Mining operations greatly speed up these reactions, partly by exposing more sulfides to weathering action, and partly by forming many small particles from the brittle pyrite crystals. A particle smaller than 25 microns oxidizes very rapidly, and soon the natural alkalinity of the water cannot neutralize the acid as fast as it is produced (2). Free acid appears in the water and the pH drops.

Sulfides of other metals, normally more stable than pyrite, become more susceptible to oxidation at low pH and they enter into solution along with more pyrite, contributing still more acid to the water.

When the pH drops below 6.5, conditions become favorable for the growth of chemosynthetic bacteria such as Ferrobacillus ferrooxidans (2), also called "thiobacillus" (3). These bacteria obtain their life energy by oxidizing ferrous iron to ferric, and they act as catalysts to greatly speed up one of the slower steps of the oxidation process. As the pH of the water continues to drop, action of the bacteria accelerates until they reach their preferred level of pH 4.3 (2). At this degree of acidity, the sulfides of copper and zinc can be readily oxidized and many heavy elements can enter into solution.

All mining, milling, and run-off sources of wastewater are affected by this process. The rate of the reaction is influenced by several factors. The longer the water stands in contact with the minerals, the lower the pH becomes and the faster the reactions proceed. Temperature also affects the rate, and in warm, acid, aerated water, the speed of dissolution of the minerals is fast enough to see.

Spoil dumps and ore stockpiles are generally considered to be less important as contributors to water pollution than are mines and tailings ponds. Stockpiles are usually placed where they will not stay saturated with water. It is assumed that they generally drain quickly when wetted by rainfall, and that they will be turned over often enough so conditions favorable to the establishment of chemosynthetic bacteria will not develop. These assumptions have been tested primarily with coal stockpiles in reference to acidity and iron content of the drainage. Tests specific to heavy metal content of sulfide ore stockpiles have not been reported.

Run-off from smelter property has not been well quantified. Since many of the minerals in the dusts on smelter property are partially oxidized by smelter processing, their rate of solution may be more rapid than from unaltered sulfide minerals.

Spoil dumps are apparently quite variable in their effect on water quality. Old dumps are not in many cases important contributors since they may contain quantities of calcium- and aluminum-based minerals that themselves decompose on weathering. These materials act to neutralize the acids produced and to re-precipitate heavy metals in new and often complex crystalline structures. There is, over a period of time, a rearrangement of elements into a more stable combination of compounds that tends to resist further weathering. The extent of this internal purification can be judged by the observation that whereas fresh spoils contain no sulfates, a well-weathered spoil may contain as much as 5 percent calcium sulfate (2).

The problem with this analysis is that not all reactions take place at the same rate; at some period, even years after deposition, there may be present quantities of soluble heavy metal salts which have not recombined into stable molecules. Even the greatest stability in a body of oxidized heavy metals is in itself relative. Deposits of oxidized ores are not found at the surface of the earth except in regions of low rainfall.

That soluble heavy metals do occur in many spoil dumps has been clearly demonstrated. Botanical research has shown that plants can be affected only by soluble salts, and studies have been made on a bent grass, Agrostis tenuis (4). A strain of this grass, growing on dumps of U.S. lead and zinc mines, has developed a high tolerance to zinc and nickel in solution. European plants have similarly adapted to the mining spoils of Wales (5), and Australian plants to the spoils of the Cloncurry district of that country (2). Few plants other than metal-resistant strains can live in these soils (4).

Tailings are expected to be even more efficient in neutralizing any acid that is formed, since other minerals are finely divided and intimately mixed with the residual sulfides. One test, however, shows that sulfide oxidation continues. Leached tailings that contained sulfides were used to grow grasses in a greenhouse environment. At the end of 2 1/2 years, most samples had dropped in pH from 2 to 3 units, and were still dropping when the test was discontinued (6).

WASTE CHARACTERISTICS

Wastewaters from the mining and processing of copper, lead, and zinc sulfide ores have one or more of the following characteristics:

1. High turbidity, containing both settleable and colloidal insoluble inorganic material. Effluent from milling and ore concentration processes is most representative of this characteristic, as is run-off from smelter property.

2. Strong acidity, containing free sulfuric acid. Mine drainage and seepage from sulfide containing tailings or spoil dumps is representative.

3. Containing heavy metal ions, frequently toxic metals, in concentrations higher than is allowable for discharge into public waters. Most wastewater sources of these industries have this characteristic.

4. Containing high concentrations of metallic and nonmetallic ions that are not toxic in moderate concentrations. Most wastewaters from these industries are high in sulfates. Concentrator effluent water is frequently high in sodium and calcium.

5. Containing materials that have a chemical or a biochemical oxygen demand, some of which may be toxic to animals or plants. Mill effluent contributes such substances.

To correct the second listed characteristic, excess acidity, requires that an alkali be added to neutralize the acid. This is the most fundamental treatment process that is required with these wastes, and has been characterized here as "pH adjustment".

Correction of the fourth listed characteristic, the presence of so-called "permanent" ions such as sulfate or sodium, requires either a change of state of the body of water or demineralization. These are considered as advanced treatment processes, and are discussed in later paragraphs.

Present technology indicates that there are only two basic methods that can be directly applied to the other three waste characteristics. Merely allowing the water to stand for several days or weeks, if the pH has been properly adjusted, will reduce the oxygen demand, decrease the heavy metals concentrations, and allow some of the suspended solids to settle. This is accomplished in these industries with the tailings pond, a basic waste treatment system.

A mechanized man-made approach to the same result is the other basic process. Precipitation of some of the heavy metal ions and their separation from the water by clarification is a tested and workable process. It can also be expanded, if needed, to biologically oxidize organic or reduced waste components.

WASTE HANDLING AND TREATMENT

Oxidation Prevention

Prevention of the formation of harmful wastewaters in a sulfide mining and ore processing operation is in principle very simple. Either the mineral can be kept dry, or oxygen can be excluded to prevent the ore from weathering (3). In practice, both are difficult.

Techniques of mining cannot keep rain from falling into an open pit or keep all water out of an underground mine. It is possible, however, to design either of these operations so the water that does enter is pumped out as rapidly as it accumulates. It may also be possible to modify local drainage in such a way that ores do not stand in ponds of water or to design an underground mine that will avoid seepage.

It is possible to provide cover for ore stockpiles and waterproof storage for concentrates, and to seal spoil and tailings dumps with a waterproof material. Stabilization of spoil heaps to restore natural appearance, if done properly, will minimize run-off of polluted waters. In extreme cases, covering a dump with latex (7), clay, tar (8), or plastic, and then with topsoil and shallow-rooted vegetation, will keep water out of contact with the minerals.

Excluding oxygen was considered in a feasibility study of mining coal in an oxygen-free atmosphere (9). In the coal industry, such a procedure would both prevent explosions and prevent pyrite oxidation. Its feasability in a mine where there is less explosion hazard is questionable.

It may be possible to exclude oxygen from some worked-out underground mine sections, but thus far this has not been demonstrated to be practical. The use of air-tight seals has been suggested for tunnels that are to be

abandoned but that must continue to drain into operating sections (2). If the air behind the seal were replaced with nitrogen, sulfide oxidation would cease. Underground mines, however, contain numerous air passages, such as cracks, joints, and fissures, which prevent effective air-tight seals. In addition, atmospheric pressure changes allow the works to breathe (10). Complete flooding of an underground mine section might also stop oxidation. Neither method, however, would instantly stop pollution of the water due to continued solution of the sulfite minerals already oxidized (2).

Sealing a spoil dump to exclude water, as described above, will also exclude oxygen (2). Heavy compaction of some types of fine-grained waste rocks may also prevent air from penetrating far below the surface. This compaction may occur naturally in some deposits of tailings.

The addition of oxygen-scavenging chemicals such as calcium sulfite may minimize the oxidation of the sulfides of heavy metals for a short period of time. Sulfites may therefore assist in temporary stabilization until more permanent treatment can be accomplished.

Use of sewage sludge or other decaying organic material has also been suggested as a means of scavenging the oxygen from spoil or tailings, thus minimizing the rate of sulfite oxidation (3).

The role of the chemosynthetic bacteria in increasing the rate of formation of acids and soluble metals has been studied in recent years (11). These bacteria are controlled in other industries by chlorination or ozonization (12), but this procedure may be self-defeating when used with sulfide ores. Antibiotics have been examined for control in mine waters, and 3 of 15 tested were found to be effective (13). An attempt to develop a virus that would infect the bacteria was apparently unsuccessful, but a reduction in the rate of sulfide oxidation was obtained when a slower-acting species of iron oxidizing bacteria (caulobactous) was purposely introduced into a mine (13).

One report states that there must be some undiscovered mechanism other than bacteria to account for the speed of oxidation observed in some sulfite localities (2).

One technique that does not work is simply sealing a mine, unless the mine can be guarded in perpetuity. The literature cites serious pollution incidents from this source. For example, one lead mine in Great Britain, sealed for about 50 years, was accidentally opened by a bulldozer. A large quantity of water ran out into a river, and the analysis indicated it contained 140 milligrams per liter lead and 230 milligrams per liter zinc (14). If exposed to air and water, there seems to be no limit to the degree of weathering that can take place.

Wastewater Collection

If the assumption is made that any sulfide mine, spoil dump, tailings bed, smelter property, or concentrator plant is a potential source of water pollution, collection and treatment of all those waters is a major effort.

In some areas, all operating units may be concentrated into a single reasonably small drainage area, but in other places, sources may be widely distributed and discharge into several different watersheds. In an old, heavily worked area, the identification of all the possible sources and assignment of responsibility for them may be very difficult. No general rules can be listed that will assist in this task, other than the well-known techniques of following the ecological clues that nature provides.

If effluent quality from existing operating installations is to be improved, however, the copper, lead,and zinc industries must at some stage attend to waste classification. There is, for example, no benefit from the practice of including sewage from operating facilities in process wastes. It is recognized that the organic molecules thus introduced can seriously limit reuse of the water for ore concentration. Conditions for best biochemical oxidation are not compatible with the conditions for best removal of heavy metals. The volume of sewage discharged by even a large plant can normally be handled by simple treatment such as a septic tank or similar unattended device, so the major cost in segregation of this waste is installation of plumbing rather than the treatment plant itself.

If cooling towers or steam boilers are part of the mine, smelter, or concentrator installation, blowdown from these sources also introduces chemicals not compatible with either metals removal or biochemical oxidation. Sequestering agents used in boiler treatment are designed specifically to keep metals from precipitating. Algicides in cooling towers act specifically to limit biological activity. Treatment of undiluted blowdown waters is difficult, but better overall effluent quality might be obtained if dilution were made downstream of the main treatment facility.

Highly acidic wastes, or wastes with high metals concentrations, can be treated more effectively while they remain concentrated. If mine waters were passed through a bed of coarse limestone and/or scrap iron prior to mixing with other wastes, heavy metals concentration would probably be reduced and less lime would be required for pH adjustment. Tests to confirm the effectiveness of such simple treatments on specific streams are easy and inexpensive to perform.

Separate treatment of cyanide wastes is virtually the only method for preventing discharge of these poisonous ions, since cyanides are stable in alkaline solutions. Cyanide decomposition is increased by exposure to ultraviolet rays, aeration, and by certain types of aerobic bacteria. A pond system would require minimum depth, aeration, and agitation to achieve these conditions; in most instances this is not feasible (15). Mixing of cyanide wastes includes a second hazard; if acid streams are intermixed prior to lime treatment, poisonous HCN gas can evolve very rapidly from the mixture.

The Tailings Pond - Primary Treatment

It has been the practice in the copper, lead, and zinc industries to combine most water wastes into one stream to be sent to a tailings pond. Usually chemicals have been added to remove acidity from the water. If

effluent quality has been inadequate, in many cases the next step has been to add another pond in series with the first. If this failed, another pond might be added. Using this theory of waste treatment, ponds have been strung together for up to eight kilometers before the water finally was discharged from company property.

There are many advocates of pond treatment of wastes. Ponds seem to be the only practical means for disposing of the large tonnages of waste rock (16). The large surface area speeds up oxidation processes and breaks down many sulfides, sulfites, and organic materials. The retention time allows most of the suspended solids to settle. In many cases, ponds can be quite efficient and can provide a sizable reduction in mineral constituents.

Combining highly metalliferous wastes with the finely divided tailings allows the same sort of internal purification process to proceed in a tailings pond that has been previously described for spoil dumps. These chemical changes are extremely complex, involving not only chemical reactions but also intercrystalline substitutions. However, the rearrangements of the elements to approch the most stable oxidized configurations occur naturally, requiring no sophisticated analyses, no precise control, and no complex equipment.

Proper design of impoundment ponds is important to groundwater quality. Most existing ponds leak effluent into the soil or rock upon which they are constructed (17). A determination of the permeability of the underlying material should be made prior to construction; if warranted, an impervious lining should be installed. Table 6-2 lists 5 materials suitable for lining impoundment ponds.

The embankment should be designed with consideration given to stability and permeability. In some instances tailings slimes can be used to decrease embankment seepage, if they are discharged from a spigoted line extending around the embankment perimeter and if the ponded effluent is kept away from the face of the embankment. This technique has been successfully used with copper tailings slimes (17).

Runoff and precipitation may overload a pond system; the resulting overtopping or breach could prove significant, especially in cases where toxic effluent is being handled. The reservoir should be capable of accommodating this additional input, or a diversion system needs to be utilized (17).

The apparent simplicity of the pond system has caused it to be widely adopted. In an isolated mining area, it is frequently the least expensive treatment system, requiring no utilities or energy and needing no highly trained staff of people for its operation. In addition, the results obtained by some tailings pond systems are impressive. One published report states that a properly designed and constructed pond, carefully operated to maintain a pH between 9.5 and 10.5, can consistently produce an effluent with no more than the following metals concentrations (16):

TABLE 6-2. COMPARISON OF TAILINGS POND RESERVOIR LININGS (17)

Lining type	Overall rating[a]	Applications	Limitations
Imported Clayey Soil	2	Most sites where clayey borrow is abundant. Clayey overburden from pit excavation is sometimes suitable.	Generally cannot be hauled economically more than 1-2 miles. Chemistry of soil may react adversely with effluents. Compacted soil must have permeability in 10^{-7} to 10^{-8} cm/sec range. Compaction may be difficult if soil is very dry or wet.
Tailings Slimes	3	Facilities producing high percentage of minus 400 mesh size tailings.	Sand fraction has to be removed. Need relatively level site for deposition of slimes. Need to compartmentalize tailings disposal area.
Bentonite	5	Site with well-graded soil at surface.	Does not seal well in high or low pH solutions.
Asphalt	4	Sites with moderate temperatures and relatively flat grades.	Susceptible to cracking in cold weather and on slopes.
Man-Made Sheeting	1	All sites.	High cost and requires smooth bedding.

[a] Neglecting cost.

Copper	30 µg/l	(extractable)
Zinc	150 µg/l	(extractable)
Lead	100 µg/l	(extractable)
Total iron	1 µg/l	

These levels are lower than reported pilot plant studies using coagulation, clarification, and filtration. Other reports state that best removal is with greater alkalinity up to pH 11.0 (18).

Despite these results, a tailings pond has its disadvantages. It is not possible to use sophisticated analyses or precise control because there is no way to collect a representative sample of in-process wastewater or to optimize the performance of the system. Any treatment will be trial and error, and an error cannot be recognized until after several days the effluent analysis indicates inadequate quality. Any change in treatment will then require several additional days before there is an improvement in effluent quality. Meanwhile, the pond is subject to continuous variation due to changes in temperature, rainfall, and wind. The phenomenon of "thermal skimming" may allow warmer wastewater to slide rapidly across colder pond water. It is therefore difficult to assess the results of different treatment strategies.

A single pond, or a string of ponds, cannot easily perform all the functions required in the treatment of these mixed wastes. Biochemical oxidation of components such as thiosalts, ammonia, and organic molecules is aided by turbulence and works better at neutral or slightly acid pH. Removal of heavy metals requires both precise control of pH at an alkaline level and quiescent conditions for sedimentation (16), whereas in a pond, degree of turbulence depends on the wind.

There is very limited information on variations in pH in a pond treatment system. The usual tailings pond pH control consists of lime additions at a manually set rate, periodically readjusted by the operator on the basis of grab samples. This degree of precision would be inadequate for some chemical processing operations, but it has seemed appropriate for ore processing since none of the chemical control in the ore flotation process itself requires any more precision than this.

The tailings pond system is firmly entrenched, however, and there is no basis on which to recommend its abandonment. The most likely combination of effluent treatments will continue to use the tailings pond, with lime added to maintain an approximate pH. A secondary treatment plant, described in the following paragraphs, would accept whatever water flows out of the pond. If pond effluent is acceptable, the secondary plant would serve only as a wide spot in the effluent line. If quality becomes unacceptable, the plant would be placed in operation, using a more scientific approach to remove the remaining pollutants.

Precipitation and Clarification - Secondary Treatment

The best known process for reducing the concentration of heavy metal ions is chemical precipitation. The soluble ions are converted to insoluble compounds by complex and variable chemical mechanisms. Solids are then separated from the water. This process is routinely used to remove iron and manganese from public water supplies, and the techniques are well known and proven in hundreds of installations.

It is known that the following metals can be successfully precipitated: copper, lead, zinc, cadmium, nickel, arsenic, chromium, manganese, and iron (19). In theory, each metal precipitates to its lowest concentration at a definite pH. Cadmium and manganese require a pH near 10, while zinc is least soluble near a pH of 9. Above or below this critical pH, more of the metal will remain in solution. It is theoretically impossible to precipitate all of the ions from solution.

In practice, there has been confirmation that optimum pH levels do in fact exist, and that a change of as little as 0.2 pH can affect the metals concentration of the effluent (20). Practice has also shown that interactions between the ions and with other substances in the water can greatly influence the degree of removal. Optimum pH is also often found to be higher than that predicted by simplified theory.

At the same time that an alkaline chemical is added for pH adjustment, flocculants are added to coagulate or agglomerate the precipitated metal compounds and other suspended solids. Flocculants form sticky or gelatinous precipitates when mixed with water; they collect and bind together small particles and form agglomerates that are heavy enough to settle upon standing.

The flocculants traditionally used are inorganic. They are the salts of aluminum or ferric iron, or are ferrous iron salts added along with an oxidant (chlorinated copperas). Being metals, they also have a rather small range over which they form the gelatinous hydroxide "floc". Aluminum does best at pH less than 8.5, iron at pH 9 to 10.

In recent years there has been an increased use of organic flocculants. These are usually proprietary mixtures, classifiable as polyelectrolytes or polymeric materials, and are used either alone or in combination with the metal salts. They are usually more effective than inorganics. Although more expensive, organic flocculants reduce the load on filters and frequently result in lower overall operating costs. In waste treatment applications, they may make filtration unnecessary.

The addition of adsorbents or fillers during coagulation is occasionally practiced, usually either to add weight to the floc to increase settling or to adsorb organic materials. It has been observed that occasionally such additives increase the degree of removal of metal ions. The mechanism of this action is unclear, but it may explain the unexpectedly low concentrations of metals in some tailings pond overflow waters. One test of ferrous acid mine drainage with activated carbon has been reported (21).

The equipment used for this clarification process is most often a commercially packaged clarifier. There must be three distinct treatment sections:

1. A flash mix section, in which all the chemical additives are quickly and thoroughly mixed with the water.

2. A flocculating section, in which the water is subjected to a slow, rolling agitation. This causes the floc to capture the fine solids and grow to large size.

3. A sludge concentration section, in which solids are separated from the water.

A number of proven designs are available that incorporate all these requirements. Energy must be provided for flash mixing and flocculation, and in the treatment of a large flow of water, sizable amounts may be required.

The sludge concentration section operates on either of two principles. The simplest is gravity settling, in which water is allowed to move slowly through a large basin or pond while solids settle to the bottom. This method is not entirely satisfactory, since the sludge cannot be continuously removed. It remains in contact with clarified water, and re-solution of the precipitate can occur. Simple settling has been largely replaced by up-flow devices in which solids settle by gravity against an upward flow of water. The solids accumulate in a blanket at some level in the clarifier, from which they are continuously purged. Part of the sludge may be returned to the flash mix section, increasing flocculant loading and thus collecting more small particles of precipitated heavy metals and other suspended solids.

A recent pilot plant study used a polymer flocculant in the clarification of sulfide mine drainage. The concentrations of metals in the effluent are presented in Table 6-3.

TABLE 6-3. METAL CONCENTRATIONS IN EFFLUENT FROM A MINE DRAINAGE CLARIFIER (22)

	mg/l, extractable		
	Average	Minimum	Maximum
Copper	0.05	0.03	0.11
Zinc	0.37	0.13	0.90
Lead	0.25	0.01	0.62
Iron	0.28	0.09	0.60

These apparently high concentrations do not reflect the degree to which metals were precipitated by the clarification process. Sand filtration removed more than 60 percent of the lead and zinc, down to an average of 0.09 and 0.15 milligram per liter, respectively. On the other hand, most of the copper passed through the filter as a soluble ion. Its average concentration was 0.04 milligram per liter after filtration.

Various proposals have been advanced for disposition of sludge from a heavy metals clarifier. Many consider sludge disposal to be one of the most problematic and potentially expensive problems to be overcome (22). Returning it to the tailings pond may upset the pond's complex chemistry, especially if organic flocculants have been used. It could be discharged to its own pond for storage in perpetuity, but any overflow would undoubtedly be highly mineralized and would itself require treatment. It could be dewatered and dried with mechanical filtration and drying equipment and disposed of as landfill, but secondary seepage could be a serious problem because of its high mineralization. Experiments with stabilizing agents (Dravo, Calcilox, etc.) such as are now being tested with power plant fly ash have not been reported. Drying and incineration of the sludge may also be feasible, with the resulting ash recycled to a pyrometallurgical process for recovery of valuable metals.

Filtration

It is known that clarification alone cannot remove all suspended solids from water. Some small particles will not become enmeshed in a particle of floc, and some of the smaller floc particles will be carried out with the water. As mentioned previously, a pilot plant test showed that more than 60 percent of the lead and zinc found in a clarifier effluent was present as insoluble particles, capable of being removed by filtration (22).

If filtration is necessary, the equipment that is most suitable for handling large volumes of water is the "rapid sand filter." Water flows downward through a bed of smooth quartz sand or anthracite coal. Larger particles of carry-over floc are caught in the spaces between sand grains, filtering out the remaining solids from the water. The effluent is clear and sparkling and usually completely free of suspended solids.

Periodically the filter must be backwashed by pumping a portion of the clear water back through the sand in reverse direction. The dirty stream of filter backwash water will contain all the suspended solids not previously removed by the clarifier. The filter backwash is more dilute than sludge from the clarifier. It is also produced in large intermittent slugs. The most usual method of disposal is an agitated tank which catches and feeds it back into the clarifier at a constant slow rate. There it is reconcentrated; solids leave as part of the clarifier sludge.

Sand filters represent a large percentage of the capital cost of a water treatment facility; they also account for much of the operating cost in terms of labor.

It is not possible to use sand filtration as a substitute for flocculation and clarification. In itself, sand is not a good filter media. The actual filtration is accomplished by the thin layer of floc that forms on the surface of the sand. Without flocculation, sand filter effluent would be dirty. The filter would also blind rapidly, and be difficult to backwash, with the result that it might not filter much more water than is needed to backwash it.

Diatomaceous earth filters could be used for filtration without prior clarification. These filters use a layer of a natural cellular silica as the filter media. More diatomaceous earth may also be fed into the water as it passes into the filter. When the filter is backwashed, no attempt is made to recover the diatomaceous earth and it is discarded along with the solids from the water. This type of filtration is widely used in the clarification of food and chemical solutions and in small water systems such as swimming pools. The operating costs and sludge disposal problems in application to a major waste stream, however, do not recommend it.

Most other types of mechanical filters used throughout processing industries are much too small for application to fine filtration of a large water stream. Direct filtration of a special type has been evaluated by at least one installation in another mining industry (tar sands), and may some day be directly used to replace the tailings pond.

The preceding description of a sand filter describes the "rapid" type as it has developed in the last 50 years. Recently, as problems of sludge disposal have increased, there has been a revival of interest in the older "slow" sand filter, once used for clarification of public water supplies. These are large basins, fitted with a network of perforated drainage pipes and covered with layers of graded gravel and a top layer of filter sand. Water passes through this filter at a much slower rate than through the rapid filter, and solid particles are caught by the same mechanism.

These filters are not backwashed. As they accumulate more and more solids, a point is finally reached where they cannot handle a reasonable quantity of water. They are then allowed to dry, and the accumulated materials are removed mechanically. It might also be necessary to discard the sand, gravel, and underdrain piping, or in extreme cases, to abandon the entire filter.

The slow sand filter operates efficiently for only a short time after it is rebuilt. As solids accumulate, vertical channels develop and much of the water flows unfiltered through these channels. Algae causes the filters to plug and bacterial infestations of many kinds may cause problems.

Slow sand filters are no longer used for public water supplies in this country, but their principle may find application in waste treatment or in sludge disposal.

Post-Treatment

Most effective removal of heavy metal ions will probably require precipitation at a pH that is more alkaline than the allowable level for discharge to a lake or stream. Reacidification may be required in order to meet these environmental standards.

The conventional method to acidify water, and until recent years the least expensive, is submerged combustion of natural gas or propane. The combustion gases, containing carbon dioxide, bubble up through the water,

forming carbonic acid. This is a weak acid, easily controlled. There is no danger of over-acidification since water can absorb only a limited quantity of the gas. The carbon dioxide introduces no permanent negative ion, and the bicarbonate ion is environmentally compatible with most ecosystems. Rising bubbles from the submerged combustion effectively agitate the water and provide good mixing so a water of uniform pH is discharged. However, the availability and cost of natural gas and propane may force the use of mineral acids which have none of these advantages for this reacidification. Sulfuric acid will undoubtedly be employed in the copper, lead, and zinc industries. Although the amount used will be very small, a mechanically agitated vessel for the final pH adjustment may be required.

Canadian researchers believe that water adequately treated for discharge suffers a drop in pH after release due to the presence of many different incompletely oxidized species. They therefore maintain that a slight excess of pH is of no great consequence, and that purposeful reacidification may be less desirable than releasing the water at higher pH (22). If this drop in pH also applies to U.S. wastewaters, extended storage in a special pond prior to release may be the best overall environmental solution.

Basic Treatment Effectiveness

Basic treatment methods outlined in the previous sections can never be totally effective. Given enough time, many of the heavy metal compounds will become soluble when exposed to the moist, oxygenated environment of the earth's surface. Eventually, the metals artificially exposed by the mining of copper, lead, and zinc ores will flow to the ocean. The best control that can be expected is a slowing down of their rate of solution, concentration, and containment, and the prevention of gross discharges.

Pond treatment, coagulation, clarification, and filtration are the only proven and practical methods for concentration of large volumes of wastes containing dilute quantities of metallic ions. Reports show that these treatments are capable of removing copper to less than 0.5 milligram per liter, lead to less than 1.0 milligram per liter, and zinc to less than 10 milligrams per liter. As mentioned previously, pilot plant tests (23) have been performed that are consistent with these levels and are comparable to tertiary treatment of domestic sewage. Other references show slightly lower concentrations, down to 0.10 milligram per liter for lead and 0.15 milligram per liter for zinc (19). Theoretically, copper could be reduced to 1 to 8 micrograms per liter, lead to 1 microgram per liter, and zinc to 10 to 60 micrograms per liter.

There is much less definitive information regarding the effectiveness of this treatment method in removing other elements. It is known that such processing should theoretically be effective for any heavy metal that can form as a positive ion in a low energy compound. This would include nickel, cadmium, bismuth, manganese, and chromium. In Canada, it has been reported that 0.04 milligram per liter is believed to be an attainable level for cadmium (18). This same report indicates that arsenic can be consistently reduced to 0.05 milligram per liter. There is, however, little operating data or theoretical evaluation of the effectiveness of basic treatment in

reducing the concentrations of arsenic, antimony, selenium, and tellurium, elements which can form low energy compounds as negative ions (arsenates, selenites, etc.).

ADVANCED TREATMENT

Present technology indicates that there are no simpler or less costly techniques that could replace tailings ponds, coagulation, clarification, and filtration. Many methods proposed for this industry, or being used in other industries, are not applicable to large volumes of water containing large amounts of suspended solids, high concentrations of dissolved solids, and much smaller concentrations of ions.

The techniques that are described in the following paragraphs are therefore applicable either in conjunction with or following basic treatment, or else applicable only to small, selected streams. In cases such as reverse osmosis and ion exchange, a clear water, free from suspended solids, is necessary. In other cases, cost may be prohibitive for large volumes.

The treatment techniques can be roughly classified as either physical, chemical, or biochemical in nature. Each will be discussed separately.

Physical Processes

Change of state is one physical process that has been considered for treatment of wastes containing large quantities of dissolved impurities. If water is evaporated, minerals remain as a sludge or scale or as a more concentrated solution. If water is frozen, the ice that forms is relatively pure and minerals are concentrated in the remaining liquid.

Freezing is more applicable to these wastes than evaporation, since calcium salts form a tough insulating scale if they are concentrated by evaporation. A study has been made of the purification of mine waters by freezing (23). The cost of this method is likely to be quite high, and the residual salts present a substantial waste disposal problem.

Reverse osmosis is another system that can physically concentrate soluble impurities into a smaller, more concentrated stream. This was also tested on waters from mines in 1971 (24). Capacities of commercial reverse osmosis units are very small, and disposal of the concentrated salts is also a problem with this method.

Chemical Processes

A variety of chemical processes have been proposed for wastes such as those found in copper, lead, and zinc processing. One method suggested is electrochemical. It is proposed that wastes be sent through electrowinning cells to deposit heavy metals at the cathode. No data exists on this method of waste treatment, but it is likely that metals concentrations are well below the practical technology for electrolytic devices. The metals would also probably be formed as a slime, and would likely require secondary coagulation and filtration for removal.

Chemical absorption methods have been proposed. A few chelating chemicals react quantitatively with selected metallic ions. The chelates, plus unreacted chelating chemicals, are then extracted from the solution. The chelates are broken, metals are salvaged, and chelating materials regenerated to be recycled. This technique is being used to extract copper from solution in some processing operations. Several developing hydrometallurgical processes in the copper industry may use this extraction technique. For treatment of wastes, however, chelating chemicals have the disadvantage of being specific to only one or two ions, usually copper and iron. The published literature indicates none that react with most other metals. This procedure may become important if demand exists for development of the required chemical materials.

Addition of sodium sulfide to wastewaters has been proposed as a method for the removal of heavy metal ions from a waste stream (19). Solubilities of sulfides of the metals is much less than their carbonates or hydroxides. A Swedish smelting facility is currently installing a system for treatment of process and runoff water in which sodium sulfide will be used to precipitate dissolved metals. Initially, sodium hydroxide is added to adjust the pH to 4.5 to 5, at which point sodium sulfide is admixed until the solution holds a pH of 5.5 (25). Tests have indicated that addition of the sodium sulfide at pH 4.5 practically eliminates the problem of hydrogen sulfide liberation while achieving reasonable arsenic precipitation (25). To further insure against hydrogen sulfide emissions, the treatment tanks will be kept under pressure. Treatment in a Dorr thickener and dewatering by vacuum filtration will follow precipitation. The filter cake will be recycled to the roaster for metals recovery. Recycle of the precipitate necessitates effective treatment of roaster off-gases due to their high arsenic content; where such control is absent, alternate disposal strategies would be necessary. Effluent overflow from the Dorr thickener will be filtered and treated with calcium hydroxide for precipitation of fluoride, calcium sulfide, and calcium sulfate. These precipitates will be landfilled (25).

Two classes of chemical treatments are in use that remove metal ions from water by substituting other more desirable ions. One, usually called "cementation," uses an active elemental metal to precipitate the less active metals. This process has been studied largely in connection with the more concentrated solutions encountered in the processing of lead or copper ores. Iron is the metal most often used in process operations, but zinc metal has also been tested. The overriding factor in determining the effectiveness of copper cementation is the concentration of copper in the feed solution. A concentration of 300 milligrams per liter may yield 50 percent recovery given optimum conditions including very low pH, agitation, and absence of oxygen or hexavalent chromium. Under these conditions, it has been shown that iron shot could reduce a copper solution to less than 1 milligram per liter in 10 minutes or less (25). Even if conditions are not optimum, however, reduction of metals concentration is significant, especially in acidic streams. The process is in use with some mine drainage streams, and its application could be increased if guidelines for its use were available. Given the requirements for high copper concentration and low pH, the most efficient application of this process could be achieved through effluent segregation. A special appli-

cation of cementation has been studied in which zinc dust was used to remove selenium from a smelter scrubber effluent (26). Similar applications may be applicable to wastes from mining and concentrating. Copper recovered by cementation can be recycled for conventional treatment.

The second metal substitution process is ion exchange. This is considered by some authors as the standard method for concentrating heavy metal ions (27), and was extensively tested in 1972 for use on acidic mine drainage. However, when applied to the bulk of the waters from mining and concentrating operations, the usual commercial ion exchange resins have a disadvantage. Although they can remove heavy metals, they also remove calcium and magnesium, and sometimes even sodium and potassium. These elements exist in wastewaters from mining and milling at concentrations often thousands of times greater than the metals. It is therefore necessary to use very large ion exchangers, removing many more materials from the water than is necessary, in order to insure that all the heavy metal ions are removed.

Ion exchange has another disadvantage. When the resin is regenerated, the heavy metals reappear as a solution mixed with large amounts of regenerating chemical, usually a sodium chloride brine. This presents a large secondary disposal problem, for which at this time there is no satisfactory solution.

There has been speculation, however, that some of the manufacturers of ion exchange resins were attempting to develop a calcium- or magnesium-based resin. Whether such a resin would work in the presence of sulfates and carbonates is not known, but a magnesium-based resin would probably not be affected by sodium, potassium, or calcium, and therefore would be reactive only to those elements less active than magnesium. Such a resin would be ideal for treatment of clarified and filtered wastes containing heavy metals.

Biochemical Processes

Biological precipitation of heavy metals has been proposed, but no references to recent research have been found. It is known that some strains of microorganisms have the ability to actively absorb heavy metals through their cell membrane. This seems to occur quite rapidly, and if the strain of organism is resistant to the metals, they can then be filtered from the water and concentrated along with the metals into a smaller volume. A problem noted in some of the initial research was that the microorganisms showed a tendency to be easily replaced by a strain that merely rejected the metals.

Selenium occurs naturally in the soils of several western states, and a group of plants has evolved on these soils that accumulates selenium in their tissues. They are well known by ranchers of the West, who call them collectively "poison vetch" because they cause selenium poisoning in livestock that consume them. The group consists of about twenty species of the genus Astralagus, and some can concentrate this element a thousandfold or more, reaching selenium concentrations up to 15,000 milligrams per liter (29). When they die, these plants may return so much selenium to the soil that other plants growing on that spot can become toxic.

There has apparently been no research to establish whether or not the ability of Astralagus to concentrate selenium can be of benefit in waste treatment. All of the plants are adapted to highly mineralized, poor quality soils. It is not beyond possibility that they could thrive on seleniferous tailings, or be irrigated with seleniferous wastewaters. It is also possible that the plants could be harvested to produce enough selenium to make this operation profitable, especially if "high yield" strains of these plants were developed. If the mechanism by which the element is accumulated by the plants were studied, it might open a new route for articifial concentration of this element.

Selenium is the only element known to be actively accumulated by plants in the United States. Other elements, however, are passively absorbed. A few food crops become poisonous if they are grown on soils high in molybdenum (29). A grass, Agrostis tenuis, mentioned earlier, can accumulate high concentrations of zinc in its tissues. Most research in the relationship of plants to metallic elements has been directed toward plants that do not absorb metals, and thus can be grown for food in the presence of hazardous ions. Much less attention has been directed toward those that do absorb metals, thereby accumulating them for safe disposal.

References

1. Smith, E.E., et al. Sulfide to Sulfate Reaction Mechanism. U.S. Department of Interior, Federal Water Quality Administration. FPS 02-70.

2. Glover, H.G. Acidic and Ferruginous Mine Drainages. The Ecology of Resource Degradation and Renewal. Blackwell Scientific Publications. London. 1975.

3. Mine and Mill Wastewater Treatment. Canadian Environmental Protection Service. Report EPS 3-WP-75-5.

4. Tribe, I. The Plant Kingdom. Grossett & Dunlap. New York.

5. Wainwright, S.J. et al. Physiological Mechanisms of Heavy Metal Tolerance in Plants. The Ecology of Resource Degradation and Renewal. Blackwell Scientific Publications. London.

6. Berg, W.A., E.M. Barrus, and L.A. Rhodes. Plant Growth on Acid Mill Tailings. Colorado State University. Fort Collins, Colorado.

7. Use of Latex as a Soil Sealant to Control Acid Mine Drainage. Environmental Protection Agency. Water Pollution Control Resource Service. EFK 06-72.

8. Hall, D.A. The Sealing of Coal Dumps with Road Tar. J. Institute of Fuel 40, 474-6.

9. Feasibility Study of Mining Coal in an Oxygen-Free Atmosphere. U.S. Department of the Interior, Water Pollution Control Resource Service. DZM 08-70.

10. Processes, Procedures and Methods to Control Pollution from Mining Activities. EPA-430/9-73-011. U.S. Environmental Protection Agency. Washington, D.C. October 1973. pp 221-257.

11. Lau, C.M., et al. The Role of Bacteria in Pyrite Oxidation Kinetics. Proceedings of 3rd Symposium on Coal Mine Drainage Research. Pittsburgh, Pennsylvania.

12. Beller, M., C. Waide, and M. Steinberg. Treatment of Acid Mine Drainage by Ozone Oxidation. U.S. Environmental Protection Agency, Water Pollution Control Research Service. FMH 12-70. 1970.

13. Shearer, R.E., W.A. Everson, and J.W. Mausteller. 2nd and 3rd Symposium on Coal Mine Drainage Research. Pittsburgh, Pennsylvania. 1968 and 1970.

14. Jones, A.N., and W.R. Haurall. The Partial Recovery of the River Rheidol. The Ecology of Resource Degredation and Renewal. Blackwell Scientific Publications. London. 1975.

15. Hyatt, D.E. The Chemical Basis of Techniques for the Decomposition and Removal of Cyanides. Fall Meeting of Society of Mining Engineers of AIME. Salt Lake City, Utah. September 10-12, 1975.

16. Bell. A.V. The Tailings Pond as a Waste Treatment System. Canadian Min. and Metall. Bulletin. April 1974.

17. Toland, G.C., and R.E. Versaw. Design of Impoundment and Evaporation Ponds and Embankments for Cyanide and Other Toxic Effluents. Fall Meeting of Society of Mining Engineers of AIME. Salt Lake City, Utah. September 10-12, 1975.

18. Base Metal Mine Waste Management in Northeastern New Brunswick. Canadian Environmental Protection Service. Report No. EP S8-WP-73-1. 1973.

19. Development Document for Interim Final and Proposed Effluent Limitations Guidelines and New Source Performance Standards for the Ore Mining and Dressing Industry. Point Source Category Volume 1. EPA-440/1-75/061. Effluent Guidelines Division Office of Water and Hazardous Materials, U.S. Environmental Protection Agency. Washington, D.C. October 1975.

20. Unpublished operating data. Water Department. Batesville, Arkansas.

21. Ford, T., and J.F. Boyer. Treatment of Ferrous Acid Mine Drainage With Activated Carbon. U.S. Environmental Protection Agency, Environmental Protection Technology Service. EPA-R2-73-150. 1973.

22. Bell, A.V., et al. Some Recent Experiences in the Treatment of Acidic Metal-Bearing Mine Drainages. Canadian Min. & Metall. Bulletin. December 1975.

23. Purification of Mine Water by Freezing. Environmental Protection Agency, Water Pollution Control Resource Service. DRZ 02-7k. 1971.

24. Acid Mine Waste Treatment Using Reverse Osmosis. Environmental Protection Agency, Water Pollution Control Resource Service. DYG 08-71. 1971.

25. Lindquist, B., K. Lindegren, and C. Sund-Hagelberg. Water Pollution Work at the Rönnskar Factories. Vatten 2-76. pp. 144-154.

26. Marchant, W.N., R.O. Dannenberg, and P.T. Brooks. Selenium Removal from Acidic Waste Water Using Zinc Reduction and Lime Neutralization. U.S. Department of Interior. Salt Lake City Metallurgical Research Center, 1975.

27. Lund, H.F. Industrial Pollution Control Handbook. McGraw-Hill. New York. 1971.

28. Case, O.P. Metallic Recovery from Wastewaters Using Cementation. Environmental Protection Agency Office of Resource and Development. 1974.

29. Kingsbury, J.M. Deadly Harvest. Holt, Rinehart, and Winston. New York.

SECTION 7

SOLID WASTE MANAGEMENT

The direct environmental impact of solid waste production in the primary copper, lead, and zinc industries is difficult to assess; its secondary effects are considerable, however. Exposing large quantities of sulfide minerals to the atmosphere leads to oxidation and sulfuric acid formation; it is the largest source of water pollution in the industry. Transporting and stockpiling of ores and by-products are sources of dust as well. Solid wastes produced at smelters include slags, fume and particulate matter captured in air pollution control equipment, sludges from electrolyte regeneration and purification, electrolytic slimes, and water treatment sludges. Many of these waste streams are recycled or processed further for recovery of their metal values. Table 7-1 summarizes the sources, quantities, and characteristics of the solid wastes from the primary copper, lead, and zinc industries.

SOURCES AND CHARACTERISTICS

Solid waste produced in these industries consists of sulfide ores and their components, processing reagents, or products of chemical reactions among these constituents.

The mining of copper, lead, and zinc ores resulted in production of 412.7 million metric tons of solid waste in 1974 (1). Of this total, 368.2 million metric tons were waste rock and 44.5 million metric tons overburden (1). About 2 tons of mine waste are generated per ton of raw nonferrous ores produced. However, this figure can vary considerably depending upon the ore body; because of the declining quality of ores, about 3 tons of waste result from each ton of raw copper ore produced. Waste rock consists of low grade ore, "country rock," or sulfide ores of metals other than the one being produced. Overburden from surface mines is usually a mixture of soil and rock with varying physical and chemical properties (2). Sulfide concentrations are generally low in the overburden.

Exposure of waste rock to the oxidizing environment at the earth's surface can lead to oxidation of sulfides and production of sulfuric acid. The acid solution is capable of leaching the metal content of the ore. This process and its effects on water quality are discussed in Section 6, Water Management.

Concentrator tailings amounted to 253 million metric tons in 1974; the copper industry alone contributed 241 million metric tons (1). Copper milling wastes are primarily composed of rock-forming minerals, but approximately

TABLE 7-1. SOURCES OF SOLID WASTE FROM MINING, CONCENTRATING, AND SMELTING OPERATIONS

Process	Waste	Characteristics	Quantities	Control
COPPER				
Mining	Waste rock, overburden	Sulfides, country rock, soil	380.5 MMT (1974)(dry weight) (1)	Spoil dump located to control seepage
Concentrating	Tailings	Sulfides, heavy metals, milling reagents, gangue	241 MMT (1974)(dry weight) (1)	Tailings pond
Reverberatory smelting	Slag	Iron silicates, heavy metals, CaO, MgO, Al_2O_3, copper, sulfur (see Table 2-)	Up to 3000 kg/metric ton copper produced	Granulation
Electric smelting	Slag	Similar to reverberatory slag, less copper and sulfur	-	Similar to reverberatory slag
Slag treatment	Slag	Similar to reverberatory slag	-	Similar to reverberatory slag
Sulfuric acid plant	Gypsum from acid neutralization	-	-	Pond
Scrubbers	Solid residue	May contain volatiles, particulates, etc.	-	Usually recycled
Vat leaching	Tailings	Comparable to concentrator tailings	-	Concentrator tailings pond
Sulfide ore leaching	Tailings	Comparable to concentrator tailings	-	Concentrator tailings pond
Cementation	Scrap iron	-	-	-
CLEAR regeneration	Filter cake	Iron sulfate/hydroxide, other	2 to 4 weight percent of spent electrolyte	Mixed with CLEAR oxidations wastes and ponded
CLEAR oxidation	Solid residue	Colloidal sulfur, soluble chlorides, cyanides	-	Settling pond

(continued)

TABLE 7-1 (continued).

Process	Waste	Characteristics	Quantities	Control
LEAD				
Mining	Waste rock, overburden	Sulfide ores, country rock	0.13 ton/ton ore (1973)(3)	Dumps, landfill, backfill
Concentrating	Tailings	Dolomite sulfides, heavy metals, milling	0.9-1.1 tons/ton ore milled	
Sintering	Slag	-	-	-
Blast furnace	Slag	FeO, CaO, Zn, MgO, AlO, SiO_2, metals	-	Granulated and ponded
Slag fuming furnace	Slag	Compounds of Fe, Ca, Si, Al, Mg, etc.	-	Concentrator tailings pond
Drossing	Slag	-	-	-
Kettle softening	Slag	Lead, sodium oxide salts of arsenic, tin, antimony	-	Dumped with blast furnace or fuming furnace slag
Harris softening	Leached slag	-	-	Dumped with blast furnace or fuming furnace slag
Antimony recovery	Excess arsenic trioxide	-	-	Sale
Bismuth refining	Slag	Ca, Mg, Pb, lead chlorides	40 percent of dross feed	Settling pond with slag from smelting
ZINC				
Mining	Waste rock, overburden	Country rock, sulfides	-	Spoil pile, pond, backfill
Concentrating	Tailings	Dolomite, reagents	0.9 to 1 ton/ton ore milled	Tailings pond, backfill
Multiple hearth roasting	Solid waste	-	-	-

(continued)

TABLE 7-1 (continued).

Process	Waste	Characteristics	Quantities	Control
Vertical retorting	Residue	Lead, copper, silver, gold, nickel, germanium, gallium, aluminum, magnesium, manganese, blue powder	-	Open slag dumps, recycle
Electric retorting	Residue	Similar to vertical retorting	-	Similar to vertical retorting
Oxidizing furnace	Residue	Zinc, cadmium, chromium, copper, lead slag (see Table 4-17), coke, ferrosilicon	350 Kg/metric ton of zinc oxide	Dried, briquetted for furnace feed
Leaching	Filter cake	High metals content	360 Kg/metric ton of zinc produced	Sent to lead smelters, leached
Purifying	Copper cake residue	Copper, cadmium, indium, thallium, gallium, germanium	-	Sent to copper smelter
	Filtration residue	Lead, precious metals, iron	-	Sent to lead smelter
Electrolysis	Precipitate	Copper, germanium, cadmium, nickel, arsenic, antimony, cobalt, iron	-	After lagoon storage, sent to copper or lead smelters
Cadmium leaching	Residue	Lead, zinc, cadmium, indium, arsenic, copper, silver, gold, silicates, quartz	-	Recycle
Cadmium purification and casting	Furnace residue	Cadmium, zinc, lead		
	Filter cake	Iron, arsenic, indium, mercury, copper	1.8 Kg/metric ton zinc produced	Dump, pond with lime treatment, or recycle to sinter

15 percent of the heavy metals originally in the ore are found in these tailings. Milling reagents may also be included in the tailings. Because tailings contain quantities of various heavy metals in concentrations above background levels, the effects of sulfide oxidation and leaching of these materials may have greater impact than for mine wastes. Newer copper concentration practices are leaving a higher percentage of pyrite in the tailings. This factor, plus the steadily decreasing metal content of available ores, is causing the production of many more tons of tailings per ton of copper than in years past. Environmental impact is primarily through secondary water pollution (Section 6).

Additional solid wastes are generated throughout the industry, although quantitative data are lacking for many processes. Pyrometallurgical operations produce dusts from gas cleaning, slags, and precipitates and dewatered sludges from water treatment. During the electrolytic refining of copper, metals that are insoluble in the electrolyte, such as gold, silver, selenium, and tellurium, settle into the slime residue at the bottom of the cell. The spent electrolyte from zinc electrolysis contains metals such as arsenic, cadmium, cobalt, copper, nickel, and tin solution; these impurities are precipitated and separated as the electrolyte is recycled.

WASTE TREATMENT

Treatment and handling of spoil from mining activities are most effective when secondary water pollution resulting from runoff and seepage is prevented. Segregation of surface mine overburden allows recovery of soil; replacement of soil aids reclamation by providing a substrate for revegetation and by curtailing oxidation of sulfides through elimination of excess contact with air (3). Proper grading of spoil is also important in both these regards.

Spoil from underground mines is piled or used as backfill. Either method may lead to secondary pollution of ground or surface water, and improper piling may result in collapse. Consideration of topography and hydrogeology is necessary when disposal sites are selected. A more detailed discussion of spoil disposal is found in Section 6.

In the copper industry, an important control method is dump leaching, which is now becoming economically attractive as a means of recovering additional copper, disposing of excess smelter acid, and simultaneously enclosing the spoil in controlled areas where slow sulfide oxidation is less likely to cause long-term pollution of watercourses.

Concentrator tailings are slurried and sent to settling ponds where the solids accumulate through the evaporation, recycle, or discharge of the liquid fraction. Solid constituents have considerable impact on effluent quality and residue piles constitute a dust or sediment source (3). The small grain size of the milled material exacerbates the situation. The location and construction of tailings ponds are critical in determining the extent to which surface or groundwaters are impacted. Important design considerations include permeability, enbankment freeboard, retention time, and the discharge system. The ponds should be designed to allow for their

eventual abandonment and revegetation. Dewatered tailings may be used for backfill of abandoned stopes or as landfill. Section 6 contains further information on these problems.

Control of solid waste from smelting operations generally consists of combining the material with concentrator tailings for ponding or, if there is sufficient metal value remaining, reprocessing on-site or at other facilities. In general, the dusts from air pollution control devices can be recycled; however, the build-up of arsenic and other trace metals may require their disposal. In some cases, dusts not suitable for recycling are processed further to recover by-products. Some slags may also cause disposal problems; kettle softening slags in the primary lead industry contain soluble salts of arsenic, tin, and antimony. Copper electrolytic slimes are processed to recover metals of value such as gold and silver, leaving a residue for disposal. The precipitates from the purification of zinc electrolyte are also processed further for recovery of cadmium and other metals.

The combining of solid wastes adds to the difficulties of wastewater treatment discussed in Section 6.

References

1. A Study of Waste Generation, Treatment and Disposal in the Metals Mining Industry. U.S. Environmental Protection Agency, Office of Solid Waste Management Programs. NTIS PB-261 052. October 1976.

2. Processes, Procedures, and Methods to Control Pollution from Mining Activities. EPA-430/9-73-011. U.S. Environmental Protection Agency. Washington, D.C. October 1973.

3. Williams, R. E. Waste Production and Disposal in Mining, Milling, and Metallurgical Industries. Miller Freeman Publications, Inc. San Francisco. 1975.

SECTION 8

EMERGING TECHNOLOGY

Considerable research is being conducted, both in the U.S. and in many other metals-producing countries, involving the primary copper, lead, and zinc industries. The goals of this research are more efficient and economical operations that will result in fewer environmental problems. The greatest amount of emerging technology is for the production of copper. To some extent, the lead and zinc industries have preceded copper in adopting new procedures or building new plants. Recent economic events have discouraged further developments in these industries while at the same time emphasizing the need for changes in copper processing. Process development has taken several directions. Although already in widespread use in the copper and zinc industries, the technology of electrolysis continues to be improved. There are a number of new continuous pyrometallurgical technologies that offer great promise in terms of improved economics and reduced environmental impacts. There are several new hydrometallurgical processes at the laboratory and demonstration plant scale that have permitted recovery of metals without the use of high temperature reduction. Unique technologies are being developed that for the first time permit separation of metals from certain raw materials or that eliminate steps usually taken in conventional processing. There are several possible methods of treating slags from continuous pyrometallurgical processes. This section of the report will outline many of these developments. Coverage of the various processes varies considerably; many of the new technologies are proprietary, and little information has been released. In each case, a brief description of the process and status of the technology is given. Where available, data on energy requirements, environmental residuals, and costs are also presented.

Electrolytic Processing

Copper and zinc refining in the U.S. is most often accomplished by electrolytic methods. The technology continues to develop, however, particularly in other countries. Foreign smelters make wider use of electrolytic principles and employ different auxiliary techniques than do U.S. smelters.

Electrolytic Refining of Lead (1) - In a process sometimes known as the Betts process, many foreign lead smelters eliminate the pyrometallurgical purification steps used in the U.S. These steps are thought to be major sources of pollution by trace elements. Electrolytic refining permits direct recovery of bismuth and other elements from electrolytic slimes. Impurities are removed together, allowing for their later individual recovery and producing refined lead in a single step.

Process Description - Lead bullion is first prepared by conventional pyrometallurgical steps. After drossing to remove copper and tin, the bullion is cast into anodes. The anodes are placed in concrete electrolytic cells, usually lined with asphalt or polyethylene. The electrolyte is a solution of lead fluosilicate and fluosilicic acid (H_2SiF_6), and is typically analyzed as lead, 67 grams per liter; free H_2SiF_6, 95 grams per liter; and total acid, 142 grams per liter. Electrolyte temperature is maintained at about 40°C.

Energy Requirements - Current density is 160 to 190
meter and cell voltage ranges from 0.3 to 0.7 volt. Current efficiency is 90 to 95 percent.

Environmental Residuals - Electrolytic refining of lead accumulates the trace elements normally released by pyrometallurgical purification into a slime, from which they may be isolated by chemical procedures.

Status of Technology - Many foreign smelters practice electrolytic refining of lead.

Direct Electrolysis of Lead from Galena (2) - Australian research has indicated that it is possible to extract lead directly from galena concentrates by electrolysis. This development would replace the conventional lead smelter.

Process Description - Galena concentrate is first compacted with 5.5 percent graphite to provide good conductivity and mechanical strength. The electrolyte is a perchlorate. A pure lead cathode is used to start deposition, and it is reported that 75 percent of the lead in the concentrate is extracted. Current efficiency is 85 percent, a considerably higher figure than is found in conventional electrolysis.

Energy Requirements - Total energy requirements are about 2600 kilocalories per kilogram of lead produced.

Environmental Residuals - Although details of the residual slurries or recycling operations are not available, it is likely that the perchlorate solutions used create highly reactive residuals. The process has potential for secondary water pollution.

Status of Technology - Electrolysis of lead directly from galena has been demonstrated on a laboratory scale. No pilot or commercial plants have been built using this process.

Purification of Zinc Electrolyte - During the electrolytic manufacture of zinc, the roasted concentrate is first leached with sulfuric acid to dissolve zinc and to precipitate iron and other impurities. The solution is then purified to remove remaining impurities before transfer to electrolytic cells. Treatment reagents such as zinc dust, organic chemicals, and occasionally arsenic and copper sulfate are used at U.S. zinc smelters. Purification is multi-stage, with heavier elements precipitated out first, followed by the most soluble metals. There are three additional processes for purification of the leach liquor in use at foreign smelters.

Process Description - The formation of jarosite for iron precipitation can be used to purify the zinc electrolyte (3,4). Jarosite is an insoluble hydroxylated sodium iron sulfate ($NaFe_3(SO_4)_2(OH)_6$). It is formed in stages, by adding roasted ore, sodium sulfate, and manganese oxide to the electrolyte under carefully-controlled conditions.

Goethite formation is another process for iron removal (3,4). Goethite, a hydroxylated iron oxide, is formed by the addition of ore concentrate, lime, and compressed air to the liquor.

More soluble impurities can be removed by a "reverse antimony" process (3,4) which is similar to the multi-stage U.S. technology. Instead of the highly toxic arsenic, antimony is added to the leach liquor in two stages with zinc dust. Cobalt and germanium are removed separately from other elements, allowing for their simplified recovery.

Environmental Residuals - Although insoluble, the stability of jarosite and goethite as waste materials is not known. The sludges receive normal by-product recovery, so no additional environmental problems should be created by jarosite or goethite formation. Substitution of antimony for arsenic as a treatment reagent may be of environmental benefit, but data are insufficient for evaluation.

Status of Technology - Jarosite formation for iron precipitation is used by ten smelters in eight countries. Two smelters in Belgium employ goethite formation for iron removal. Four smelters in Belgium and the Netherlands use the "reverse antimony" process.

Periodic Reverse Current (PRC) (3,5) - Although offering no environmental advantages or disadvantages, use of the PRC process increases the production rate for an electrolytic copper refinery. Using this technique, each cell can process about 15 percent more copper than a conventional cell.

Process Description - PRC operates with cathodes of much larger size and much higher current densities than are found in conventional electrolytic cells. Every few minutes the current density is reversed for a few seconds to dislodge deposited impurities and to prevent the growth of "needles" on the cathode. The period of current reversal is reported to be about 10 seconds during each 190 seconds of operation.

Energy Requirements - Current densities up to 375 amperes per square meter can be used.

Environmental Residuals - PRC waste streams are no different from conventional refineries in proportion to the quantity of copper processed.

Status of Technology - At least two copper refineries in Sweden and Japan are operating with the PRC process. There may also be other installations using this technology.

Pyrometallurgical Developments

There are several pyrometallurgical designs which, like the Noranda, continuously smelt concentrates to matte and produce continuous streams of off-gas high in SO_2 content, suitable for direct application to sulfuric acid production. The differences between them are in mechanical detail and furnace configuration. Although all the designs are based on sound theoretical and practical calculations, continuous smelting must be considered to be in an early stage of development because none has yet been built in a variety of sizes. The attractions of continuous processes are readily apparent. With steady, uninterrupted feed of raw materials and withdrawal of product and wastes, equipment remains in full-time operation. Continuous plants are easily automated and can be built in very large sizes. As a result, they are more economical than other designs, since more product can be made per input of capital investment, fuel, and operating labor.

WORCRA (6,7,8) - The WORCRA process, in which smelting and converting occur in a single furnace, is a development of Conzinc Riotinto of Australia. Countercurrent flows within the furnace are claimed to be one of the principal advantages of this process, since they are said to provide better separation of slag than in-line flow designs such as Noranda. The system can be built with equal efficiencies in small-capacity units.

Process Description - The WORCRA furnace has three distinct zones. In the center is the smelting zone, into which concentrate and flux are injected by high-velocity pneumatic or mechanical devices. The resulting agitation helps to separate the slag from the matte. They flow in opposite directions into converting and slag cleaning zones located at opposite ends of the furnace. It is this countercurrent flow that provides good slag separation. Because of the interaction of iron in the underlying matte, the copper content of the slag is continuously reduced as it moves through the slag-cleaning zone. The matte entering the converting zone is reduced to blister copper which flows continuously from the furnace. The blister copper contains 97.0 to 98.5 percent copper and 0.6 to 0.9 percent sulfur, a low-grade product requiring considerable fire-refining before it can be electrolytically refined.

Energy Requirements - Fuel consumption is expected to be 50 to 60 percent of that needed for a reverberatory-converter process of comparable throughput.

Environmental Residuals - The WORCRA furnace produces two gas streams. One consists primarily of combustion gases with very low SO_2 content, and the other contains most of the SO_2, in the range of 9 to 12 percent. The slag flows continuously from the end of the slag-cleaning zone. It contains 0.32 to 0.81 percent copper, a lower concentration than in other continuous smelters.

Costs - Capital costs are said to be 20 to 30 percent below those of reverberatory smelting.

Status of Technology - A WORCRA pilot plant processing 73 metric tons of concentrate per day operated for several months. For a short period it processed about 100 metric tons per day. There are no commercial installations.

Mitsubishi (6,7,9,10,11,12) - Mitsubishi Metal Corporation of Japan has developed a continuous smelting process which is basically similar to the flash smelting process but which uses three interconnected furnaces. This arrangement eliminates the need for equipment to transfer molten matte and also reduces manpower requirements. As with the flash and Noranda processes, the oxidation of sulfur and iron supplies part of the process energy requirements and a steady concentrated stream of SO_2 suitable for acid manufacture is produced. The Mitsubishi is therefore more energy efficient and less polluting than conventional reverberatory smelters.

Process Description - Mitsubishi provides for smelting, converting, and slag cleaning in three separate furnaces, with gravity flow of product and slag from one furnace to the next. The smelting furnace is charged with copper concentrates, fluxes, gas or oil fuel, and oxidizing air through lances installed vertically through its roof. Oxygen enrichment of air is possible. The matte and slag that are produced flow continuously to the slag-cleaning furnace. Pyrites mixed with coke are added to release excess copper trapped in the slag layer. After cleaning, the slag is skimmed out continuously and granulated, with the matte being sent on to the converting furnace. The matte contains 60 to 65 percent copper. The converting furnace is also equipped with lances that blow air or oxygen-enriched air and limestone flux through the mixture, converting matte to blister copper. The slag is recycled to the smelting furnace by a system of moving buckets, while the blister copper flows continuously from the furnace. The product is analyzed as 98 to 99 percent copper and 0.4 to 0.8 percent sulfur, a quality higher than from conventional furnaces.

Very high smelting rates, about six times greater than that of a reverberatory furnace and at least twice as much as a flash smelter, are possible in the Mitsubishi process for two reasons. First, each furnace has only a single reaction zone, allowing the smelting rate to be increased far more than in conventional furnaces, which have separate reaction zones for oxidation and settling. Conventional furnaces operate at a slower rate because oxidation is promoted by good mixing while settling requires quiescent conditions. Second, the Mitsubishi uses the reaction heat generated by the oxidation of sulfur and iron efficiently because the concentrates and fluxes injected through the lances into the bath are reduced very rapidly.

Energy Requirements - Mitsubishi furnaces are energy efficient since the reaction heat of the oxidation of iron and sulfur supply part of the energy requirements. The reduction in energy consumption is at least 30 percent, and can be as high as 50 percent when coupled with oxygen enrichment. Energy consumption per metric ton of product has been reported as follows:

Oxygen	0.3 metric tons
Fuel oil	2.4 million kilocalories
Natural gas	360,000 kilocalories
Electricity	400 kilowatt-hours

Total energy consumption is 3.3 million kilocalories per metric ton of copper, as opposed to 6.4 to 7.2 million kilocalories per metric ton for conventional reverberatory smelting.

Environmental Residuals - The mixed exhaust gas leaving the furnaces contains over 10 percent SO_2 when the smelting furnace is operated with air enrichment to 25 percent oxygen. It is a steady stream which can be readily recovered as sulfuric acid, with total sulfur recovery over 90 percent. The gas is prepared for the acid plant by cooling and dry cleaning in ESP's or fabric filters followed by wet scrubbing to remove fine particulates and excess moisture. Very small particulate loadings are claimed since the molten liquids flow continuously over very short distances and the solids are trapped by the furnace bath.

Flue dusts, consisting of copper oxides and minor elements, are generated in amounts slightly smaller than in flash smelting. Dust carryover is about 3 to 4 percent of the charged concentrate. The flue dusts have to be bled to the extent necessary to avoid buildup of volatile impurities. The dust bleed amounts to 0.3 metric ton per metric ton of copper product. Dusts rich in lead and zinc can be sent to a lead-zinc smelter.

Water effluent streams are created by slag granulation, acid plant blowdown, and contact cooling of the anodes. They are similar in nature to those from a conventional smelter, but somewhat larger in volume. Pollution is minimal. Amounts of water produced per metric ton of copper are slag granulation, 50,000 liters; acid plant blowdown, 14,000 liters; and contact cooling, 7,800 liters.

Since the converter slag is entirely returned to the smelting furnace, the only slag to be disposed of comes from the slag-cleaning furnace. An estimated three metric tons of granulated slag per metric ton of copper product are generated by the Mitsubishi furnaces. Its major constituents are iron silicates.

Status of Technology - Mitsubishi began development work on this process in 1961. They have operated a prototype pilot plant with a monthly capacity of 450 metric tons of copper at their Onahama smelter. A semi-commercial plant with a capacity of 1500 metric tons of copper has been operating since 1971. A commercial operation producing 45,000 metric tons per year is operating at Naoshima and a 118,000 metric ton per year plant is being designed for the proposed Kidd Creek smelter of Texasgulf.

Kivcet (7,13,14) - The Kivcet process is being developed in the Soviet Union. It is said that any combination of copper, lead, and zinc concentrates may be used as feed, simplifying concentrating procedures and permitting greater by-product recovery.

Process Description - The Kivcet smelting process contains three steps. In the first, dried concentrates are reduced in a cyclone furnace with pure oxygen. The melt is transferred to an electric furnace, where a matte forms which is then sent to a second electric furnace, in which blister copper and slag are separated and collected.

Energy Requirements - The Kivcet process requires no additional fuel except when the sulfur content is below 20 percent.

Environmental Residuals - Off-gases from the Kivcet process contain 70 to 85 percent SO_2, and are said to contain all the zinc in the concentrate feed because of their high temperature. Zinc metal is recovered directly through condensation of off-gases from the cyclone furnace.

Status of Technology - A 45 metric-ton-per-day pilot plant is believed to be operating in the Soviet Union. No commercial plants using the Kivcet process have been reported.

Q-S Oxygen Process (15,16) - Dr. M. Paul E. Quenaw and Dr. Reinhardt Schulmann, Jr., of the United States have developed a continuous smelting process that uses pure oxygen for the autogenous conversion of concentrates to metal in a single vessel. The process can be used for sulfide ores of copper, nickel, cobalt, or lead. As in other continuous operations, overall capital and operating costs are minimized.

Process Description - The Q-S reactor is an elongated, kiln-like vessel with crude metal and slag discharge ports at opposite ends. The cylinder is gently sloping and stepped downward to the lower metal discharge port. The furnace is rotatable along its axis, simplifying maintenance and improving heat and mass transfer. The furnace design and sequential staging of oxygen admission creates a countercurrent flow of the crude metal and the slag. Bottom-blowing achieves regulated, localized turbulent baths for optimal gas-liquid-solid contact with minimal eddy and splash.

Energy Requirements - Specific energy inputs are not available, but the use of oxygen minimizes energy consumption and conserves oil and natural gas. Energy use should be reduced even after the energy used to manufacture oxygen is taken into account.

Environmental Residuals - The Q-S process creates a single off-gas stream, minimizing the costs and problems of sulfur fixation and particulate removal. Slags are said to be low enough in product-metal content to allow direct disposal.

Status of Technology - A Q-S pilot plant has been built for lead. No commercial or pilot plants have been announced for copper.

Momoda Furnace (7) - One replacement for the conventional copper reverberatory furnace is the Momoda furnace, a new small-size design suitable for lower-grade concentrates which has been developed by the Sumitomo Metal Mining Company of Japan. It is designed for decentralized installations where it is economical to minimize transportation of ore. The rated capacity of this furnace is about 450 metric tons of charge per day. The Momoda would not be economical in large installations because many units would be required. However, for smaller operations, smelting rates are about twice as fast as conventional reverberatory furnaces.

Process Description - The Momoda is a vertical cylindrical furnace. The concentrate feed is ground to 50 percent minus 325 mesh and is plasticized to a stiff mass by kneading with flue dust and 10 to 15 percent water. It is extruded into the center of the furnace. Fluxes such as silica and limestone are ground coarsely and added at the periphery of the cylinder. This manner of charging creates a bed in which the center contains fine-grained ore materials and the perimeter contains coarse-grained flux. During reduction, the gas generated flows upward through the coarse material rather than through the finer concentrate. With the radiant heat being directed into the concentrate, less dust is contained in the exhaust gas. Matte and slag flow from separate taps in the bottom of the furnace. The matte can be processed to blister copper by any standard copper converter.

Energy Requirements - The Momoda uses coal for fuel. It requires only 28 percent of the heat that a reverberatory furnace uses to produce the same quantity of matte.

Environmental Residuals - As a result of the charging procedure, the off-gas from the Momoda furnace is very low in particulates. The exhaust gas is produced continuously and has an SO_2 content of 7.3 percent and is therefore suitable as feed to a sulfuric acid plant.

Status of Technology - The Momoda furnace is currently in use at two of Sumitomo's smelters.

Hydrometallurgical Processing

Hydrometallurgical processes use chemicals in water solution to break down an ore mineral, permitting recovery of a metal without the use of high temperature reduction. There are three basic classifications of hydrometallurgy:

1. Simple heat or vat leaching of ores that are not suitable for conventional pyrometallurgical processing.

2. Hybrid processes, usually roasting followed by leaching and electrolysis.

3. Complete hydrometallurgical processes, with no pyrometallurgical steps.

Simple Leaching - Simple heap or vat leaching (Section 2, Process Nos. 31 and 32) as practiced in the western states in an accelerated form of natural weathering. In one test, iron bacteria, which speed up the rate of natural weathering, were also found to speed up the process in a vat leaching operation (17). They are most effective for ores containing pyrite, and the weathering rate can increase 5.5 times as fast with bacteria as without. Since iron bacteria are not known to be harmful to plant or animal life, no adverse environmental effects should result from their use.

In-situ leaching, using ammonia or sulfuric acid and ferric sulfate, has been tested in Michigan and Nevada (18). However, if uncontrolled, these processes could cause much wider pollution of ground water than surface operations.

Thin Layer Leaching (19) - A thin layer (TL) leaching technique has been developed by Holmes and Narver, Inc., of Anaheim, California. The method is claimed to be more efficient that other types of leaching for many oxide and mixed ores.

Process Description - Ore is crushed to less than about 1 centimeter and is mixed with a small amount of acid. A unique curing step follows in which the ore is placed in a curing pile for up to 24 hours. During this period, the acid solubilizes the metal values and generates heat which accelerates the leach reaction. The cured ore is than spread over large concrete pads in a layer 1 meter thick or less. A leaching solution is percolated through this layer to remove metal values. The initial leach effluent has high metal values and low acid content. This liquor is treated by solvent extraction; the highly acidic solvent extraction raffinate is recirculated as a leaching solution.

Environmental Residuals - Exhausted beds should be nearly dry when dumped in landfills; this should result in less groundwater pollution than other leaching processes.

Status of Technology - A commercial facility is being constructed in Chile which will handle 2300 metric tons per day of copper ore.

Hybrid Systems - In hybrid hydrometallurgical processes, roasting of the ore concentrate is generally followed by leaching and electrolysis. The "sulfation roasting" used at one U.S. copper plant (Section 2, Process No. 36) is an example of a hybrid process, as is the electrolytic process in use at four of the six primary slab zinc plants. Many types of hybrid systems are being investigated, but with the exception of the Treadwell process, none of those described has been operated beyond laboratory scale.

Treadwell (20) - The most extensively tested hybrid hydrometallurgical process has been developed by Treadwell Engineering Company of New York. Although there have been problems, the Treadwell process may yet find future applications since it provides a means of concentrating copper values prior to pyrometallurgical processing.

Process Description - Copper concentrate is leached in a kiln with sulfuric acid, forming soluble copper sulfate which is separated from insolubles and precipitated with hydrogen sulfide gas. Metallic copper is produced by reacting cuprous cyanide crystals with hydrogen gas.

Environmental Residuals - Although the potential exists for the loss of poisonous cyanides, this material is used in many chemical processes without apparent environmental damage.

Status of Technology - A Treadwell pilot plant with a capacity of 0.9 metric ton of concentrate per day was operated by the Anaconda Company. The tests were discontinued and Anaconda chose the Arbiter process because of corrosion problems with the Treadwell.

Minemet (21,22) - A process developed by Minemet Recherche of France is said to be nonpolluting, economically competitive with pyrometallurgical processes, and economically viable even for small installations of 10,000 to 30,000 metric tons per year.

Process Description - Sulfation-roasted copper concentrate is first selectively leached with a cupric chloride solution to form cuprous and ferric chlorides and elemental sulfur. The use of cupric chloride is favorable since it is not necessary to separate the metal from the agent after leaching. Pyrites remain unchanged in the residue. The leach solution is then divided into two streams. Air is injected into the first stream and the dissolved iron is precipitated by oxidation as goethite. Copper is recovered as a cupric ion by solvent extraction from the second stream, again with air injection to maintain good extraction conditions. The cupric chloride leaching agent is regenerated in both of these processes. The solvent is then stripped with spent electrolyte, producing copper sulfate. Copper is recovered by conventional electrolysis.

Energy Requirements - Energy use is said to be low. Only electricity and air are used, and the extraction and electrolysis stages are conducted at about 50°C.

Environmental Residuals - If it does not receive further processing, the leach residue could prove to be an unstable solid waste. However, the elemental sulfur it contains could be easily recovered by flotation or other means for internal use or sale. After copper removal, the electrolyte solution can be processed for the recovery of silver and other metals.

Costs - The Minemet process is considered to be very economical. Capital costs are low due to the simplicity of process equipment since all steps are carried out at atmospheric pressure. In addition, the capacity of the solvent is utilized to the maximum, thereby reducing the size and number of mixer-settlers required. Operating costs are low because of the low energy requirements and the complete regeneration of the leaching agent. There is also the possibility of reclaiming other metals in the concentrate, including precious metals.

Status of Technology - Minemet has been studying this process on a laboratory scale. Construction of a pilot plant is planned for 1977.

Fused-Salt Electrolysis (23,24,25,26) - A hybrid hydrometallurgical process that uses fused-salt electrolysis for the production of lead and zinc has been developed by the U.S. Bureau of Mines.

Process Description - A mixed lead-zinc sulfide concentrate is leached with an acid solution at 100°C and a pressure of 3.5 kilograms per square centimeter in the presence of chlorine and oxygen. Zinc, copper, and cadmium are dissolved as metal chlorides, and lead and silver remain in the leach residue and are dissolved in a subsequent brine leach at 90°C. Upon cooling of the solution, lead chloride crystallizes and is separated by filtration. The remaining filtrate is treated by solvent extraction to recover copper, then with zinc powder to recover remaining impurities. Anhydrous zinc chloride is recovered from the resulting purified solution by evaporation. To form a stable low-melting electrolyte, potassium and lithium chlorides are mixed with the lead and zinc chlorides, which are then electrolyzed individually in sealed cells with graphite electrodes. Electrolysis is conducted at 500°C, and the electrodes operate at a current density of 0.8 ampere per square centimeter. Chlorine gas is liberated at the anode and captured for recycle. The lithium and potassium are not affected by electrolysis and can be used for months without replacement. In an alternative process applicable only to lead concentrates, ferric chloride solution is the leach solvent used for preparing the lead chloride crystals.

Energy Requirements - Energy required for electrolysis is 95 kilocalories per kilogram for lead production and 455 kilocalories per kilogram for zinc. Current efficiency is 95 percent.

Environmental Residuals - The disposition of impurity metals in these fused-salt electrolytic processes has not been described. However, they must be discarded as wastes since the purity of the lead or zinc product is expected to be more than 99.9 percent.

Costs - Costs should be lower than in conventional electrolysis because of the energy conservation and the elimination of much of the labor involved in charging, stripping, and remelting cathodes.

Status of Technology - Experiments with fused-salt electrolysis are being conducted on the laboratory scale.

Battelle (27) - A hybrid hydrometallurgical process using a different approach has been developed by Battelle-Pacific Northwest Laboratories.

Process Description - Following a neutral roast of copper concentrate, the roasted calcine is leached in hydrochloric acid, dissolving the iron and generating hydrogen sulfide gas. Because much of the iron and sulfur have been removed, the leach residue contains high concentrations of copper. The residue is processed to copper by conventional pyrometallurgical methods.

Environmental Residuals - SO_2 from the pyrometallurgical operations can be reacted with the hydrogen sulfide from leaching to form elemental sulfur. Careful process control could reduce the formation of either gas. The leach solution can be processed to recover the hydrochloric acid and to produce a high-grade iron oxide suitable for sale.

Costs - Economics of the Battelle process are said to be competitive with conventional technology.

Status of Technology - Laboratory-scale tests are being conducted.

Lime-Concentrate-Pellet Roast (28) - Another modification of sulfation roasting which has not been as thoroughly studied as the Minemet is lime-concentrate-pellet roasting.

Process Description - Lime is mixed with the copper concentrate and the mixture is pelletized before roasting. Most of the sulfur in the ore is converted to calcium sulfate. A sulfuric acid leach dissolves the copper, which is then extracted by electrolysis.

Environmental Residuals - This process would add no significant environmental impacts to those of conventional sulfation roasting.

Status of Technology - Research has been limited to laboratory tests.

Nitrogen Roast (29) - Another hybrid hydrometallurgical process being investigated by the U.S. Bureau of Mines involves roasting in an atmosphere of nitrogen.

Process Description - Copper concentrate is roasted in a nitrogen atmosphere, removing about 20 percent of the sulfur present. A subsequent hydrochloric acid leach removes most of the iron. A second leach dissolves the copper, which can then be extracted electrolytically in a special cell in the presence of SO_2.

Environmental Residuals - Environmental hazards cannot be determined based on available data.

Status of Technology - Laboratory testing only has been conducted.

Distillation with Acetonitrile (30) - A process for removing copper from sulfation-roasted concentrate is being developed in Australia.

Process Description - A sulfation-roasted concentrate is leached with sulfuric acid and the organic chemical acetonitrile. Metallic copper is formed upon distillation of the solution, thereby eliminating electrolysis.

Energy Requirements - Energy use is said to be less than 60 percent of that for conventional processing.

Environmental Residuals - Acetonitrile is poisonous and its widespread use might cause serious pollution.

Status of Technology - Australian research into distillation with acetonitrile has proceeded at the laboratory level only.

Complete Hydrometallurgy - Complete hydrometallurgical processes are being tested primarily for copper production. They treat the ore concentrates directly with chemicals, using no pyrometallurgical steps. Current research appears to be in progress primarily in the United States and Canada.

Cymet (6,31,32,33,34) - An advanced hydrometallurgical process is being developed with the trade name of Cymet.

Process Description - The Cymet process is expected to be based on a leach using a solution of ferric chloride and hydrochloric acid. This solution will react with minerals such as chalcopyrite to produce cuprous chloride, ferrous chloride, and elemental sulfur. The sulfur is a solid material that remains with the leach residue. The solution contains copper and iron, reported to be 99 percent of the copper from the concentrate and 84 percent of the iron. It is also reported to extract 60 percent of the gold content and 96 percent of the silver, but the chemistry of this extraction has not been published. The concentration of copper in the leach liquor is reported as 5.5 percent by weight. It is believed that following the ferric chloride leach cuprous chloride is to be separated from the leach liquors by crystallization. The designer of the Cymet process states that it is a closed-loop system. One or more regeneration steps will therefore be required to recycle the hydrochloric acid and to oxidize the ferrous iron back to ferric chloride. The system must also dispose of the iron that enters the process with the concentrate, as well as the elemental sulfur produced during the leach reactions. Details of these procedures have not been announced. Theoretically, if 25 percent of the liquor from the crystallization step is treated to extract the HCl, that portion could be discarded as stable ferric oxide or hydroxide. The remaining 75 percent would represent the amount of iron that would have to be oxidized and combined with all the reclaimed hydrochloric acid to keep the process operating with no loss of the chlorine intermediate. This theoretical calculation makes the assumption that the original concentrate was pure chalcopyrite.

Energy Requirements - Steam is probably used to maintain leach temperature and electricity for materials handling. Fluidized bed processes require sizable amounts of electricity to circulate high-velocity gas streams. Details of utilities have not been published.

Environmental Residuals - Possible wastes include hydrochloric acid fumes from leaching, a liquid effluent from crystallization, and solids from the regeneration process.

Costs - Information is not available at the present.

Status of Technology - A pilot plant was built in 1974 but was never started. In 1975, substantial changes were made, but no information was

officially released, pending patent coverages. It is not known whether the changes have been successfully applied to the pilot plant, or whether plans to build a full-scale process are still being considered.

Anaconda Arbiter (6,11,31,35,36) - The Anaconda Company is developing a hydrometallurgical process which has made use of both chemical and electrowinning techniques for treatment of leach liquor.

Process Description - Copper ores are leached with ammonia and oxygen in two parallel reactors, forming soluble copper ammonium sulfate, ferric oxide, and hydroxide. Froth flotation mechanisms in the reactors aerate the pulp and increase the dissolution rate. In an earlier process variation, the pregnant liquor was next filtered, boiled to drive off excess ammonia, and treated with SO_2 gas. An insoluble copper ammonium sulfite formed which precipitated and was filtered from solution. Autoclaving in the presence of sulfuric acid converted the crystals to metallic copper.

The more recent Arbiter process separates the leach liquor and residue in a series of countercurrent decantation thickeners. The pregnant solution from the first thickener is pressure filtered and contacted with an organic reagent in a solvent extraction step. The extracted copper is washed to remove ammonia and stripped in spent electrolyte. This copper-bearing electrolyte then enters a conventional electrowinning stage for cathode production.

An ammonia recovery system is included in the process stream.

Energy Requirements - This process, especially the later version, is energy intensive. Electrical energy is required for electrowinning, and steam generation is necessary as well. Quantities are unreported.

Environmental Residuals - Quantities of leach residue are considerable, 1.3 to 1.8 tons per ton of copper produced. This residue contains iron oxide, silica, pyrites, bismuth, sulfides, lead, arsenic, zinc, and other materials. Calcium sulfate sludge is discharged from ammonia recovery at a rate of 4.5 dry tons per ton of copper produced. Atmospheric emissions include fugitive H_2SO_4 and ammonia from the more recent process. Liquid effluent from the earlier process include an ammonium sulfate solution from the precipitation and autoclave steps. This solution contains copper and free sulfuric or sulfurous acid.

Further details are not available.

Status of Technology - Both variations have operated in large process demonstration units.

Sherritt-Gordon/Cominco (10,20,31,37) - A complete hydrometallurgical process has been developed as a joint venture of Sherrit-Gordon and Cominco.

Process Description - This process is expected to be a ferric chloride leach, but few details have been released.

Environmental Residuals - As with other chloride-based hydrometallurgical systems, problems in the disposal of soluble waste chlorides are likely.

Status of Technology - The Sherritt-Gordon/Cominco process is probably now operating in a pilot plant at Fort Saskatchewan in Alberta, Canada.

DuPont-Kennecott (31,38) - DuPont and Kennecott Copper have patented a complete hydrometallurgical process based on a mixture of nitric and sulfuric acids.

Process Description - Ore concentrate is first leached with a mixture of nitric and sulfuric acids, after which the nitric acid is decomposed and recovered. Iron is removed by precipitation and filtration, and the copper is extracted by electrolysis. The process is pressurized, operating at temperatures up to 200°C.

Status of Technology - A pilot plant is now under construction, and this has the appearance of a serious and well-organized development effort.

Lurgi-Mittenburg (37) - The Lurgi-Mittenburg process is a complete hydrometallurgical system developed in Germany and Austria.

Process Description - Sulfuric acid is used in a high-pressure leach. Pressures up to 20 kilograms per square centimeter and temperatures of 115°C promote direct oxidation of the minerals with oxygen gas. Copper is recovered by electrolysis.

Status of Technology - A demonstration plant is now operating.

Treatment of Zinc Silicate Ores (39) - An auxiliary application of hydrometallurgy is being tested in connection with zinc production from silicate ores by the Electrolytic Zinc Company of Australia. The problem in leaching these ores is the formation of colloidal silica which must be removed before the solution can be treated by electrolysis. If successful, this procedure may find application in many industries, since silicate ores have proved to be one of the more difficult industrial separations.

Process Description - A complex coagulation procedure is being developed to solve this problem. The leach solvent is sulfuric acid, spent electrolyte from the zinc cells.

Environmental Residuals - Application of the process should create no new environmental problems.

Status of Technology - A pilot plant with a capacity of 5-metric-tons-per-day is operating.

Miscellaneous Technologies

There are several metallurgical technologies that have been proposed or that are in use outside the U.S. that fit no generalized classification.

Torco (7,40) - Copper silicates cannot be extracted by flotation methods from gangue rock. Torco overcomes this problem. It is a pyrometallurgical process for recovering copper from silicate ores such as chrysocolla and dioptase. It is based on the fact that copper silicates form growths of elemental copper when they are crushed, mixed with sodium chloride, and smelted in an inert atmosphere.

Process Description - Coarse silicate ore is first crushed, dried, and ground. It is then mixed with coal and heated in a fluidized-bed reactor. The heated mixture overflows into a second fluidized-bed reactor, into which sodium chloride and additional coal are added. Copper forms as granules, and the mixture is water quenched, ground, and then separated by flotation. Cyclones are integral parts of the fluidized-bed reactors. The low-grade copper product is mixed with the feed to a pyrometallurgical smelter.

AMAX Base Metals Research and Development Corporation has experimented with a modification of the Torco process for use with sulfite ores of copper, such as chalcopyrite. After dead roasting to remove all sulfur, the ore concentrate is mixed with sodium chloride and heated to 700° to 800°C. Granules of copper form, which are separated by flotation and melted to form blister copper of 98 percent purity.

Environmental Residuals - Sulfur dioxide emissions depend on the sulfur content of the silicate ore. Additional particulate control equipment may be used in addition to the cyclones.

Status of Technology - The Torco process is in use in Zambia and Mauritania. The AMAX modification has only been demonstrated in laboratory tests.

TBRC (6,7,10,41,42) - The TBRC (top blown rotary converter) was originally designed for nickel production. However, tests by its developer, the International Nickel Company of Canada (INCO), have shown that it is applicable to other metals. They claim that the TBRC, using U.S. concentrates, can produce copper that can be directly cast as anodes, thus eliminating fire refining. The TBRC is said to provide increased operational flexibility through close control of both turbulence and temperature while maintaining high thermal efficiency.

Process Description - The TBRC is a rotatable refractory-lined furnace that can be tilted for filling, blowing, or emptying. The vessel atmosphere is controlled by injecting natural gas and air, oxygen, or oxygen-enriched air onto the molten surface through a water-cooled lance in the hood. The vessel rotates constantly, providing excellent gas-solid-liquid contact, rapid mixing of the charge, and even heat distribution which increases the rate of conversion reaction. Oxygen efficiency greater than 95 percent can

be obtained by adjusting rotational speed and angle of the injection lance. When pure oxygen is used, no heat is carried away by atmospheric nitrogen. The high temperatures resulting eliminate more impurities and cause better separation of slag from the copper than with other converters.

Energy Requirements - Because of its high thermal efficiency and elimination of fire refining, the TBRC uses less fuel than other converters.

Environmental Residuals - When oxygen is used with the TBRC, the exhaust gases contain about 50 percent SO_2. However, it is a batch-type mechanism that does not produce a continuous stream of gas. Because of the turbulence in the converter, most solid particles are captured by the liquid or by the wet surfaces above the liquid. This results in lower particulate loadings and fugitive emissions. As with conventional converters, slags contain sufficient copper to be economically returned to the smelting process.

Costs - By eliminating fire refining, the TBRC can reduce a smelter's capital investment. However, it does require a source of oxygen for highest operating efficiencies.

Status of Technology - The first commercial copper TBRC plant, now under construction in British Columbia, was scheduled for completion in late 1977.

Oxygen-Enriched Smelting (10,11) - In addition to the continuous Q-S Oxygen process already discussed, other applications of pure oxygen or oxygen-enriched air to smelting have been developed. They provide the benefits of decreasing fuel requirements while increasing the process capacity. Oxygen enrichment can increase smelting rates by 25 to 50 percent; an additional 3 to 8 tons of charge can be smelted for every ton of oxygen.

Process Description - Oxygen enrichment can be applied to conventional reverberatory smelting, increasing fuel efficiency. The increased operating temperature decreases refractory life, so enrichment of converter air is normally limited to about 27 percent oxygen for conventional bottom-blown converters. The increased temperature improves separation of the matte and reduces metal losses. In addition to increasing SO_2 concentrations, enrichment also increases the converter's scrap melting capability.

The specific capacity of furnaces such as flash smelters can be increased by the use of oxygen. Since waste heat recovery is already practiced in these furnaces, the increase in energy efficiency is not as great as in the case of converters.

Energy Requirements - Oxygen enrichment results in lower energy use than conventional processes, even after the energy used in oxygen manufacture is taken into account. Fuel efficiency is increased particularly where waste heat is not recovered.

Environmental Residuals - The use of oxygen at a smelter does not significantly change the nature and amount of effluents. Although there are

no published data in this area, the higher operating temperatures may result in an increased circulating dust load. The higher temperatures may also result in more NO_x formation, although these gases are probably absorbed in the acid after scrubbing and treatment in an acid plant. The oxygen plant itself uses significant quantities of indirect cooling water, and it may contain oil and grease, corrosion inhibitors, and chlorides.

Costs - Oxygen enrichment should result in slightly lower capital costs because of the increase in capacity. Maintenance requirements will be higher, but operating costs should decrease because of lower fixed costs.

Status of Technology - Oxygen enrichment of combustion air has been tested with Noranda, Mitsubishi, and WORCRA furnaces. It has been practiced since about 1972 at the flash smelter at Harjavalta, where it has enabled almost completely autogenous furnace operations and resulted in a large increase in furnace capacity. The only major reverberatory smelter using oxygen is at Onahama in Japan.

Sea Nodule Processing (43) - A highly specialized hybrid process in Canada is recovering copper, nickel, and cobalt from sea nodules.

Process Description - This process features reduction in a pyrometallurgical kiln followed by smelting in an electric furnace and hydrometallurgical leaching in an oxygen atmosphere. Although intended primarily for nickel recovery, copper equivalent in weight to 60 percent of the nickel is also extracted.

State of Technology - Sea nodule processing is being practiced, but the scale of operations is not known. Its use by U.S. technologies is currently limited by legal difficulties regarding international use of oceanic materials.

Slag Treatment

Slags from most continuous copper pyrometallurgical processes contain sufficient quantities of the product metal to justify recovery before disposal. The metal is in the slag either as entrapped globules of a second phase such as matte or copper or as dissolved metals. Slag treatment in an electric furnace is now used at the single U.S. flash smelter. This process has been previously discussed (Section 2, Process No. 12).

There are two other basic recovery techniques available for slag treatment. At some Japanese and Canadian smelters, flotation techniques are used with slags that have a high sulfur content (7,44,45). Flotation slag treatment will also be used at the new Noranda continuous smelter in Utah, although few details are available. This method is described in Process No. 13, Primary Copper Production. Another possibility in use outside the U.S. is hydrometallurgical processing of slags, consisting of grinding and leaching with acids to form copper solutions, from which metal is recovered by conventional concentrating techniques or electrolysis (46). With both these methods, however, the slags are discarded as finely ground tailings. Without adequate stabilization or proection, they are less stable in weathering

and would generate more fugitive dusts than electric furnace slags, which are masses of good crystalline composition. In addition, crystals in hydrometallurgical slags would be corroded and saturated with acids, and therefore would be more likely to cause secondary water pollution. Although capital costs are similar to electric furnace treatment, operating costs are significantly higher in either case. Hydrometallurgical treatment is probably the most expensive, since it requires both grinding and electrolysis for complete recovery of the metal.

References

1. Encyclopedia of Chemical Technology. Interscience Publishers, a division of John Wiley and Sons, Inc. New York. 1967.

2. Shewes, H.R. Electrowinning of Lead Directly from Galena. Proc. Australasian Inst. Min. Met. December 1972. (244). pp. 35-41.

3. Kawakita, T., T. Kitamure, Y. Sakoh, and K. Sasaki. Design, Construction, and Operation of Periodic Reverse Current Process at Tamano. Presented at the 105th annual meeting of the AIME. Las Vegas, Nevada. February 22-26, 1976.

4. Claessen, P.L. Electrowinning of Zinc under Periodic Reverse and Pulsating Current Conditions. Presented at the 104th annual meeting of the AIME. New York, New York. February 16-20, 1975.

5. Lindstrom, R. Production Unit with Current Reversal at the Ronnskar Works of Boliden AKTIE bolag, Skelleftehamn, Sweden. Presented at the 104th annual meeting of AIME. New York, New York. February 16-20, 1975.

6. Background Information for New Source Performance Standards: Primary Copper, Zinc, and Lead Smelters. Volume I, Proposed Standards. EPA-450/2-74-002a. Environmental Protection Agency. Research Triangle Park, North Carolina. October 1974.

7. Price, F.C. Copper Technology on the Move. Chemical Engineering. New York, New York. April 16, 1973.

8. Two Direct Smelting Processes Designed for Pollution Control in Copper Plants. Engineering and Mining Journal. New York, New York. April 1971.

9. Nagano, T., and T. Suzuki. Commercial Operation of Mitsubishi Continuous Copper Smelting and Converting Process. Presented at the 105th annual meeting of the AIME. Las Vegas, Nevada. February 22-26, 1976.

10. Dolezal, H., et al. Environmental Considerations for Emerging Nonferrous Metal-Winning Processes (Field Review Copy). U.S. Bureau of Mines. Salt Lake City Metallurgy Research Center.

11. Arthur D. Little, Inc. Environmental Considerations of Selected Energy Conservation Manufacturing Process Options. Vol. 14, Primary Copper Industry. EPA Contract No. 68-03-2198. Draft. Cambridge, Mass.

12. PEDCo Environmental, Inc. Evaluation of the Status of Pollution Control and Process Technology - Japanese Primary Nonferrous Metals Industry. Contract No. 68-02-1375, Task 36. U.S. Environmental Protection Agency. July 1977.

13. Kivcet. Pamphlet by V/O Licensintorg Mostva-SSSR. Distributed by Southwire Company. Carrollton, Georgia.

14. Kivcet Process for Complex Ores. World Mining. June 1974. pp. 26-27.

15. Queneaw, P.E., and R. Schuhmann, Jr. The Q-S Oxygen Process. Journal of Metals. New York, New York. August 1974. pp. 14-16.

16. Matyas, A.G., and P.J. Mackey. Metallurgy of the Direct Smelting of Lead. Metallurgical Society of AIME. New York, New York. TMS Paper No. A75-80. February 1975.

17. Michalek, Z. and A. Malik. The Influence of the Mineral Composition of Copper Ores on the Effect of Biological Leaching. Archives Hutn. 1975. 20, (3) pp. 421-432.

18. Hockings, W.A. and W.L. Freyberger. Laboratory Studies of In-Situ Ammonia leaching of Michigan Copper Ores. Presented at the 105th annual meeting of the AIME. Las Vegas, Nevada. February 22-26, 1976.

19. Teter, E.K. Personal communication on TL Process. Holmes and Narver, Inc. Anaheim, California. 1977.

20. Chemical Route to Copper? Chemical Engineering. New York, New York. April 20, 1970. pp. 64-66.

21. Demarthe, J.M., L. Gandon, and A. Georgeaw. A New Hydrometallurgical Process for Copper. Presented at the 105th annual meeting of the AIME. Las Vegas, Nevada. February 22-26, 1976.

22. Demarthe, J.M., et al. A New Hydrometallurgical Process for Copper. Presented at the 105th Annual Meeting of AIME. Las Vegas, Nevada. February 22-26, 1976.

23. Haver, F.P., C.H. Elges, D.L. Bixby, and M.M. Wong. Recovery of Lead from Lead Chloride by Fused-Salt Electrolysis. U.S. Department of the Interior. Bureau of Mines Report of Investigations 8166. Washington, D.C. 1976.

24. Haver, F.P., and M.M. Wong. M.M. Ferrix Chloride - Brine Leaching of Galena Concentrate. U.S. Department of the Interior. Bureau of Mines Report of Investigations 8105. Washington, D.C. 1976.

25. Haver, F.P., D.C. Shanks, D.L. Boxby, and M.M. Wong. Recovery of Zinc from Zinc Chloride by Fused-Salt Electrolysis. U.S. Department of the Interior. Washington, D.C. Bureau of Mines Report of Investigations 8133. 1976.

26. Bureau of Mines Research 1975. U.S. Bureau of Mines. Washington, D.C.

27. Rohrmann, C.A., and H.T. Fullam. Control of Sulfur Dioxide Emissions from Copper Smelters - Volume II, Hydrogen Sulfide Production from Copper Concentrates. Environmental Protection Agency, Office of Research and Development. Research Triangle Park, North Carolina. PB 237 928. September 1974.

28. Bartlett, R.W., and H.H. Haung. The Lime-Concentrate-Pellet Roast Process for Treating Copper Sulfide Concentrates. Journal of Metals. December 1973. pp. 28-34.

29. Gabler, R.C., B.W. Dunning, R.E. Brown, and W.J. Campbell. Processing Chalcopyrite Concentrates by a Nitrogen Roast-Hydrometallurgical Technique. U.S. Department of the Interior. Bureau of Mines Report of Investigations No. 867. Washington, D.C. 1975.

30. Propose Copper Leaching Process. Industrial Research. August 1976. pp. 38.

31. Rosenzweig, M.D. Copper Makers Look to Sulfide Hydrometallurgy. Chemical Engineering. Volume 83, No. 1. January 5, 1976. pp. 79-81.

32. Druesi, P.R. Process for the Recovery of Metals from Sulfide Ores through Electrolytic Dissociation of the Sulfides. U.S. Patent No. 3,673,061. June 27, 1972.

33. Druesi, P.R. Cymet Copper Reduction Process.

34. Copper Hydrometallurgy: The Third Generation Plants. Engineering and Mining Journal. June 1975.

35. Arbiter, N. and D. Milligan. Reduction of Copper Ammine Solutions to Metal with Sulfur Dioxide. Presented at the International Symposium on Copper Metallurgy. 105th annual meeting of the AIME. Las Vegas, Nevada. February 22-26, 1976.

36. Arbiter, N., D. Milligan, and R. McClincy. Metal Production from Copper Ammine Solution with Sulfur Dioxide. Presented at IChemE International Symposium on Hydrometallurgy. Manchester, England. 1975.

37. Habashi, F. Pressure Hydrometallurty: Key to Better and Nonpolluting Processes. Engineering and Mining Journal. New York, New York. May 1971. pp. 88-94.

38. Brenneck, H.M. Recovery of Metal Values from Ore Concentrates. U.S. Patent No. 3,888,748. June 10, 1975.

39. Matthew, I.G., and D. Elsner. The Hydrometallurgical Treatment of Zinc Silicate Ores. Metallurgical Society of AIME. TMS Paper No. A75-74. New York, New York. February 1975.

40. Opie, W.R., L.D. Coffin, and D.C. Casanelli. A Minimum Pollution, Low-Energy Pyrometallurgical Process for Treating Chalcopyrite Concentrates. Presented at the 105th annual meeting of the AIME. Las Vegas, Nevada. February 22-26, 1976.

41. Daniele, R.A., and L.H. Jaquary. TBRC A New Smelting Technique. Dravo Corporation, Pittsburgh, Pennsylvania. Also presented at 1972 annual meeting of the AIME. February 20-24, 1972.

42. Mason, J.L., and S.F. Siscoe. Afton Mines Smelter to Use Top Blown Rotary Converter Process. The Northern Miner. April 22, 1976. pp. B12-B13.

43. Sridhar, R., and W.E. Jones. Extraction of Copper, Nickel and Cobalt from Sea Modules. Presented at the 104th annual meeting of the AIME. New York, New York. February 16-20, 1975.

44. Hallett, G.D. Continuous Copper-Smelting Process Uses Single Vessel. Chemical Engineering. New York, New York. April 26, 1976. pp. 62-64.

45. Mills, L.A., G.D. Hallett, and C.J. Newman. Design and Operation of the Noranda Process Continuous Smelter. Presented at the International Symposium on Copper Extraction and Refining. 105th annual meeting of AIME. Las Vegas, Nevada. February 22-26, 1976.

46. Kmetova, D. Hydrometallurgical Method of Copper Recovery from Slags. Zbornik V.S.T. Kosiciach. 1971.

SECTION 9

RECOMMENDED RESEARCH AND DEVELOPMENT PROGRAMS

It is evident that many areas within the primary copper, lead, and zinc industries warrant investigation. Presented below are several suggested programs - some applicable to only one industry, some to all. The purposes of these programs would be to eliminate some uncertainty about the potential environmental effects of the industry operations and to develop control techniques and policies that minimize environmental impacts.

Determination of the most effective method of disposition of "black acid" from a copper electrolytic refinery.

Need:

Almost one percent of the input to an electrolytic refinery consists of elements that refining removes from the product. The process yields a strongly acidic waste stream that contains many of these elements, including much of the nickel, cadmium, arsenic, antimony, and bismuth that enter with the anode copper. There is apparently no effective method to dispose of this stream.

Project Scope:

(a) Establish the quantity and composition of waste electrolyte solution from operating electrolytic refineries.

(b) Determine what methods are currently used to dispose of this material.

(c) Define best control technology for this waste.

Determination of heavy metals concentrations in effluents from tailings piles, mine waters, and milling wastes.

Need:

Mining and milling operations generate large quantities of wastewater containing various heavy metals. Before environmental effects of these heavy metals can be properly evaluated, the specific compounds must be identified and their chemical states and quantities defined.

Project Scope:

(a) Perform field survey and sampling of water from various operating mines and mills.

(b) Perform elemental analysis and identification of specific compounds.

(c) Establish the quantity of release of each of these compounds from industrial sources.

Investigation of high-boiling liquids for the removal of particulates from a smelter gas stream.

Need:

Smelter gases are high-temperature streams containing many solid particles. Methods for removal of these particulates require cooling of the gases, usually by evaporation of water into the stream, resulting in an excess of water that must be removed prior to the treatment of the gas for SO_2 removal. Use of stable high-boiling liquids to remove these particulates from a hot gas stream could eliminate the excess of water, enable recovery of heat in an auxiliary boiler, and provide a method for handling dusts without fugitive losses.

Project Scope:

(a) Identify liquids of high boiling points that might serve for scrubbing liquors at temperatures above 100°C.

(b) Design and evaluate a system for high-temperature treatment of smelter gases that minimizes introduction of water vapor into the gas stream.

Disposal of DMA process wastes.

Need:

DMA absorption of SO_2 produces a small, concentrated liquid waste stream for which there is no simple method of disposal.

Project Scope:

(a) Determine stream condition.

(b) Determine methods for fixation or removal of materials determined in (a).

(c) Demonstrate disposal technique selected.

Determination of a complete mass and energy balance, including all operations from mine to product.

Need:

A detailed process flow sheet with a chemical mass balance would be especially useful in identifying feasible emission controls and the effects of process changes. An energy balance on the complete mine-to-product mass flow would be used to identify areas where the process could be modified to improve energy utilization. A smelter operator is better able to afford pollution control when his process is optimized for energy utilization.

Project Scope:

(a) Generate a complete mass balance for smelter operation, using concentrate analyses, stream analyses, thermodynamics and chemical kinetics data, and process flows.

(b) Prepare an energy balance for smelter operation based on available and field-generated data.

Assessment of the quantity and concentration of metallic elements in the waste gas streams of lead smelters.

Need:

It is known that fumes of cadmium, arsenic, antimony, and other metals are evolved in lead smelters from sintering, slag fuming, reverberatory softening, and recovery of cadmium and antimony. These fumes are cooled and condensed in chambers from which the exhaust gases are sent to the atmosphere, generally without further treatment. Published literature gives no data on the effectiveness of the control devices being used.

Project Scope:

(a) Define the quantity and composition of fume emissions from the above-listed waste gases.

(b) Establish the effectiveness of simple condensation in removing sublimed fumes from such streams.

(c) Define acceptable methods of control of these emissions.

Determination of slag cleaning furnace exhaust stream characteristics and emission control methods.

Need:

Electric slag cleaning furnaces are being installed in conjunction with new pyrometallurgical processes for copper. Gaseous exhausts from these furnaces are low in volume but have not been fully characterized. Emissions may include trace element fume, carbon monoxide, and hydrogen. Requirements for

the development of emission control technology should be determined.

Project Scope:

(a) Determine exhaust gas flows and pollutant exhaust concentrations, including suspected heavy metals, carbon monoxide, and metal carbonyls.

(b) Determine types of pollution control systems that are effective to control the emissions that were characterized in (a).

(c) Establish emissions performance standards for slag cleaning furnaces.

Further evaluation of the use of sulfides to precipitate heavy metals from wastewaters.

Need:

Sulfides will be used in Sweden to remove dissolved metals from wastewaters. The treatment may effectively lower metals concentrations, but several attendant disadvantages should be investigated and addressed.

Project Scope:

(a) Determine residual sulfide concentrations in effluent necessary to remove metallic species from wastewaters.

(b) Determine heavy metal removal effectiveness and secondary resolution of precipitated metals.

(c) Evaluate potential of H_2S formation from treated waters.

(d) Determine disposal techniques for metal sulfide sludges that result from the treatment process.

Study the problems of arsine evolution from tank houses.

Need:

Arsine is formed in electrolytic tank houses. Arsine is a gas evolved when the outlet concentration of the electrolyte falls below 3 grams of copper per liter. There is evidence of additional arsine formation where overall copper concentrations in the electrolyte are higher.

Project Scope:

(a) Measure arsine concentrations at various suspect points in the refinery operation.

(b) Develop means of extracting arsenic before the electrolytic refinement stage.

(c) Investigate transport of arsine in the ecosystem.

Evaluation of the environmental aspects of expanded hydrometallurgical practices.

Need:

Gradual reductions in the available quality of copper ores and increased supplies of sulfuric acid resulting from SO_2 control requirements tend to support an expansion of hydrometallurgical methods for the recovery of copper. The disposal of increased quantities of resulting spent leach solutions should be assessed.

Project Scope:

(a) Determine the chemical characteristics of spent leach solutions.

(b) Assess the environmental effects resulting from the disposal of untreated spent leach solutions.

(c) Determine treatment requirements to insure that effluent liquids from hydrometallurgical processes meet Federal and local standards.

(d) Fund R&D efforts to develop additional control processes that may be required.

Investigation of pretreatment techniques for removal of impurities from concentrate prior to smelting.

Need:

Most of the environmental problems associated with base-metal production are related to the impurity content of the concentrates entering the smelters. Removal of the impurities prior to smelting will eliminate volatile metals and reduce the potential for adverse effects from flue dusts and slags. Volumes of waste at the smelter will be considerably decreased.

Project Scope:

(a) Investigate new leaching procedures for preleaching of the concentrate.

(b) Develop more efficient flotation operations or additional stages of flotation to remove impurities or by-products.

(c) Demonstrate technology in cooperation with the industry.

Assessment of the environmental effects from tailings containing elemental sulfur, and determination of methods for their control.

Need:

Most of the developing hydrometallurgical processes for copper production will produce large quantities of elemental sulfur, which will be discarded along with waste rock as tailings. Sulfur is a strongly reduced material, which is used for many purposes, including application as an insecticide and as an acid additive in soil treatment. Prior to large-scale application of these new processes, a study to evaluate the long-term stability of the tailings and to devise effective methods of control is recommended.

Project Scope:

(a) Estimate the quantities of sulfur and other constituents to be expected from proposed hydrometallurgical processes.

(b) Outline the most likely chemical changes that will take place in this material during extended outdoor exposure.

(c) Confirm the above findings by controlled tests.

Investigate conversion of ferric oxide sludge from hydrometallurgical processes to a form suitable for use in other industries.

Need:

Many copper concentrates contain such high levels of iron that they could also be used as iron concentrates. The residues from leaching operations contain significant amounts of iron and other marketable metals. The use of these residues for raw materials in iron and other metal industries warrants investigation. Such a procedure could make hydrometallurgy more economically attractive and reduce the environmental problems of sludge disposal.

Project Scope:

(a) Phase-identify residual solids from conventional hydrometallurgical processes.

(b) Investigate possible conversion of leach residue into concentrate for iron production.

(c) Consider alternative solvents for recovery of copper and iron in a desirable form.

Decontamination of wastewater from lead milling operations.

Need:

The water that is used in a lead concentrator is recycled to a certain extent, but eventually it is discharged in a highly mineralized condition. Net evaporation conditions in the West and high natural pH conditions in Missouri tend to minimize the necessity for further treatment, but a full assessment of environmental effects has not been made.

Project Scope:

(a) Determine concentrations of metallic species in concentrator effluents.

(b) Evaluate potential environmental effects associated with discharges determined in (a).

(c) Determine control system requirements and costs to reduce effluent concentrations to acceptable levels.

Determination of leaching properties of lead mine spoil and other lead smelter residues.

Need:

Solid wastes from lead mining and smelting operations are dewatered and impounded or used for backfill for road building. The natural alkalinity of surface waters in the Missouri area is reported to inhibit dissolution of heavy metals, but possible long-term effects of leaching and transfer of metals to other areas have not been studied.

Project Scope:

(a) Determine ultimate disposition of heavy metal values in discarded materials and the stability of metallic species in spoil materials and mill refuse ponds.

(b) Determine leach transfer rates for heavy metals in discarded materials.

(c) Suggest methods to stabilize residues if stability is found to be unsatisfactory.

Investigation of economics for hydrometallurgical production of lead.

Need:

Hydrometallurgical production of lead has been suggested for environmental reasons, but economics are still not sound. Considerable development will be required to make the process competitive.

Project Scope:

(a) Conduct research to determine more favorable kinetics for lead chlorination hydrometallurgy.

(b) Investigate the possibility of bacterial leaching; some geochemists believe that some galena deposits were bacterially formed.

(c) Develop Sherritt-Gordon high-pressure leach technology for lead.

(d) Determine economic factors, such as the price of coke, that would promote the use of hydrometallurgy.

Optimal production of lead sinter exhaust gas for the manufacture of sulfuric acid.

Need:

The windbox of an updraft sintering machine is generally divided into a strong gas and a weak gas section, where the strong gas is taken to a sulfuric acid plant. The weak gas SO_2 concentration is too low for acid manufacture, so it is discharged only through a particulate control device. Optimization of gas flows would minimize the SO_2 emissions.

Project Scope:

(a) Determine parametric relationships between sinter feed quality and variation, windbox gas flow and recirculation, windbox SO_2 concentrations, sinter quality, process reliability, and acid plant operability.

(b) Investigate potential use of oxygen enrichment to upgrade sinter gas quality for sulfuric acid production. Compare with cost feasibility for blast furnace SO_2 control.

Lead blast furnace SO_2 recovery.

Need:

SO_2 emissions from a lead blast furnace account for only about 5 to 10 percent of the sulfur originally present in the lead concentrate. If it is determined that these emissions require control, effective control systems will have to be demonstrated.

Project Scope:

(a) Determine whether sufficient SO_2 control can be obtained at lead smelters without controlling blast furnace emissions.

(b) Describe systems for SO_2 control and estimate control costs for blast furnace control.

Metal and trace material emission control efficiency - baghouses, electrostatic precipitators, and scrubbers.

Need:

Collection efficiencies for various materials vary widely with the type of control device that is employed. Vapors that are not condensed by the control devices cannot be collected and may escape from baghouses and electrostatic devices. Small particles may escape from all three devices.

Project Scope:

(a) Determine penetration parameters for the three collection devices in pyrometallurgical service. Emissions of zinc, arsenic, and cadmium, as well as other substances, should be determined.

Zinc fuming emissions evaluation.

Need:

Zinc is recovered from some lead slags, either as reduced metal or as zinc oxide. The fuming process that is used may result in emissions of metallic fume, carbon monoxide, or other materials. These emissions may require additional pollution controls.

Project Scope:

(a) Determine pollutant species and quantities emanating from zinc fuming operations.

(b) Determine optimum control devices for the pollutants that are emitted during the fuming operation.

(c) Determine emissions performance criteria for zinc fuming plants.

Establishment of effective disposal procedures for slags from the kettle softening and bismuth refining processes in lead smelters.

Need:

Two smaller-volume slags from a lead smelter are discarded in open dumps, even though they contain water-soluble components. One contains sodium salts of arsenic, antimony, and tin; the other contains chlorides of lead, magnesium, and calcium. At this time, there is no method to dispose of these materials that will assure no secondary water pollution from these sources.

Project Scope:

(a) Determine quantity and composition of this waste from operating lead smelters.

(b) Establish degree of water solubility of these slags when exposed to weathering.

(c) Define acceptable treatment or disposal methods.

Investigation of the possible use of copper, lead, and zinc slags as raw materials in cement production.

Need:

Waste slag produced by base-metal smelting constitutes a cumbersome disposal problem. Composition of slags from lead and zinc smelters resembles that of cement except for iron content. Slags from copper smelters are too high in iron content for cement production, but the use of slag in asphalt aggregate may be feasible. Suitable uses for these slags as raw materials in other industries would eliminate disposal problems and would maximize resource utilization.

Project Scope:

(a) Determine chemical and physical properties of slags relative to standards for construction materials.

(b) Investigate fluxing methods and additives for producing slags with desirable chemical and physical properties.

(c) Determine whether the slags exhibit adverse solubility or reactivity characteristics.

(d) Investigate possible treatment of slags to improve chemical or physical properties.

(e) Compare cost of slags as raw materials with costs of materials now used in cement production.

Evaluation of the environmental effects of the various chemicals being used for ore flotation.

Need:

Flotation reagents in the environment produce adverse effects, such as algae blooms. In addition, the reagents have caused ductwork fires in a least one lead smelter. Furthermore, they discolor sulfuric acid in subsequent smelter operations, decreasing the product's marketability. Little is known regarding the surface kinetics and chemistry of flotation separation. Other chemicals may offer an alternative once this operation is better understood.

Project Scope:

(a) Conduct research on the surface kinetics and flotation chemistry required for better understanding of the phenomenon.

(b) Test alternative reagents that could be used for flotation, and investigate their environmental effects.

(c) Investigate alternative methods of separation such as liquid-density methods, grain-size distribution, and settling properties.

Assessment of the effects of minor wastewater streams when mixed with mine and concentrator wastes.

Need:

It is a common practice in the mining industry to intermix most wastewater streams for treatment and recycle. It is likely that inclusion of certain smaller waste streams, such as sewage, boiler blowdown, and cooling tower overflow seriously limits the reuse of this combined wastewater and/or hinders effective treatment for removal of metallic constituents.

Project Scope:

(a) Identify minor streams that may interfere with reuse or treatment.

(b) Quantify effects of removing the detrimental minor streams from the mixed waste streams.

(c) Define acceptable alternative methods for disposal of the minor waste streams.

(d) Compare overall production costs of treating mixed versus separated streams.

Development of mechanical screening and filtering equipment to separate tailings from concentrator water.

Need:

Tailings are commonly removed from flotation water by allowing them to settle in a pond, from which they are then removed by dredging and earth-moving. This solid waste could be controlled more effectively by means of a mechanical device that continuously removes the tailings. Such a method would simplify hauling of the solids, minimize the time solids remain in contact with water, and reduce the land area requirement for deposition of these wastes.

Project Scope:

(a) Establish conceptually a method for mechanically separating mill tailings from flotation water.

(b) Develop detailed conceptual drawings for the device.

(c) Define the manufacturing and operating costs.

Investigation of methods for disposition of heavy-metal sludge from the clarification of base metal wastewaters.

Need:

Coagulation of water has been shown to be an efficient method for removal of heavy metals from wastewater, but no techniques have been developed to effectively dispose of the highly metalliferous sludge that results from these operations. Several routes have been proposed, ranging from chemical fixing and incineration to recycling the sludge to pyrometallurgical processing; none of these possibilities has been developed or tested.

Project Scope:

(a) Identify possible methods for disposition of clarifier sludge from heavy metals water treatment.

(b) Test each method and establish its effectiveness.

(c) Define relative costs of each disposal method.

Evaluation of the methods for reacidifying water from a heavy metals waste treatment process.

Need:

Effective treatment of wastewater for removal of heavy metals requires, in most cases, that the water be made more alkaline than is allowable for discharge to a public watercourse. Reacidification may redissolve some of the precipitated heavy metals, especially if mineral acids are being used. A study of the methods and necessary degree of reacidification would be valuable.

Project Scope:

(a) Perform laboratory tests to establish optimum pH for removal of heavy metals from typical base metal wastewater streams, by treatment with lime, coagulation, and settling.

(b) Determine the effect of reacidification on suspended heavy metals solids, using both carbonic and sulfuric acids.

(c) Establish the effects of high pH discharge on water quality of a typical receiving body.

Investigation of chelating agents for the separation of heavy metals from water solutions.

Need:

Many heavy metals are capable of forming complex molecules (chelates) with certain organic materials. These chelates can be extracted with an inert

solvent, thus concentrating the heavy metal. Chelating chemicals are in use that are specific to copper and are used in solvent extraction techniques for copper recovery. It is possible that other less-specific chemicals or chemical mixtures could be effective in removing many metals from industrial waste streams.

Project Scope:

(a) Define chemical compounds that can effectively remove heavy metals by solvent extraction techniques.

(b) Determine by laboratory examinations effectiveness of these compounds in removing low concentrations of heavy metal ions from a solution of typical industrial waste composition.

Development of an ion exchange resin that will selectively remove heavy metal ions from water solution.

Need:

Ion exchange techniques can effectively remove heavy metal ions from water, but they cannot normally be applied to waste streams with high concentrations of calcium and magnesium. Because most ion exchange resins, being sodium based, are not selective to heavy metals, the water must be completely softened to ensure complete removal of these elements.

It has been postulated that a resin based on magnesium would be insensitive to the common heavy elements, and would therefore be selective to iron and to metals less active than iron, including copper, lead, zinc, cadmium, and mercury. No such resin has been developed.

Project Scope:

(a) Identify possible compounds that could act as an ion exchanging substance specific to heavy metals in solution.

(b) Synthesize these materials and define their operating suitability.

Investigation of selenium-accumulating plants as a method of controlling selenium in base-metal production wastes.

Need:

There is no proven process for extracting selenium from mine spoil, concentrator tailings, or wastewaters. It is known that certain plants selectively accumulate selenium in their tissues in concentrations often a thousand times higher than average concentrations in their environment. Knowledge of the mechanism of accumulation might open a route for control or recovery of this element, or the plants themselves might be used for its accumulation.

Project Scope:

(a) Determine which plants effectively accumulate selenium in their tissues, and establish horticultural requirements for their growth.

(b) Grow these plants in test areas to determine their ability to remove selenium from soil or water.

(c) Determine the mechanism by which they accumulate this element, with a view toward artificially duplicating this mechanism.