United States
Environmental Protection
Agency

EPA-600/2-88-026a

April 1988

EPA

Research and Development

DEVELOPMENT OF PROPOSED
STANDARD TEST METHOD FOR
SPRAY PAINTING TRANSFER EFFICIENCY
Volume I. Laboratory Development

Prepared for

Office of Air Quality Planning and Standards

Prepared by

Air and Energy Engineering Research
Laboratory
Research Triangle Park NC 27711

RESEARCH REPORTING SERIES

Research reports of the Office of Research and Development, U.S. Environmental Protection Agency, have been grouped into nine series. These nine broad categories were established to facilitate further development and application of environmental technology. Elimination of traditional grouping was consciously planned to foster technology transfer and a maximum interface in related fields. The nine series are:

1. Environmental Health Effects Research
2. Environmental Protection Technology
3. Ecological Research
4. Environmental Monitoring
5. Socioeconomic Environmental Studies
6. Scientific and Technical Assessment Reports (STAR)
7. Interagency Energy-Environment Research and Development
8. "Special" Reports
9. Miscellaneous Reports

This report has been assigned to the ENVIRONMENTAL PROTECTION TECHNOLOGY series. This series describes research performed to develop and demonstrate instrumentation, equipment, and methodology to repair or prevent environmental degradation from point and non-point sources of pollution. This work provides the new or improved technology required for the control and treatment of pollution sources to meet environmental quality standards.

EPA REVIEW NOTICE

This report has been reviewed by the U.S. Environmental Protection Agency, and approved for publication. Approval does not signify that the contents necessarily reflect the views and policy of the Agency, nor does mention of trade names or commercial products constitute endorsement or recommendation for use.

This document is available to the public through the National Technical Information Service, Springfield, Virginia 22161.

EPA-600/2-88-026a
April 1988

DEVELOPMENT OF PROPOSED STANDARD TEST METHOD FOR SPRAY PAINTING TRANSFER EFFICIENCY VOLUME I. LABORATORY DEVELOPMENT

BY
K. C. KENNEDY
CENTEC CORPORATION
Reston, Virginia 22090

EPA Contract Number 68-03-1721, Task 2

EPA Project Officer

Charles H. Darvin
Air and Energy Engineering Research Laboratory
Research Triangle Park, NC 27711

Prepared for:

U. S. ENVIRONMENTAL PROTECTION AGENCY
OFFICE OF RESEARCH AND DEVELOPMENT
WASHINGTON, D. C. 20460

ABSTRACT

This research program was initiated with the overall objective of developing a standardized spray painting transfer efficiency determination methodology. A Steering Committee made up of industry and EPA representatives was assembled to provide consultation and guidance for the TE program.

Research into existing TE methods and an exhaustive literature search were conducted. TE methodologies identified by this research were compared and evaluated. The best characteristics of these methods were used in developing the standardized laboratory TE method.

In initial tests the standardized laboratory method comprised three major equipment types, two paint types, and specially designed spray targets. Paint was applied to the targets under rigidly specified conditions. The amount of solids deposited on the target was divided by the net solids sprayed at the target to arrive at transfer efficiency.

According to ASTM 691-79, the first requirement for the "existence of a valid, well-written test method [is that the test method] has been developed in one or more competent laboratories and has been subjected to a screening procedure or to ruggedness testing." To fulfill this requirement, the test method was tested at PPG Industries and at Ransburg Electrostatic Equipment. In each laboratory the TE results were tightly grouped, exhibiting high precision. The standard deviations were 2.5 and 1.8 for PPG and Ransburg, respectively.

The differences between TE's for the two tests indicated that some important factors may not have been adequately controlled. A third test, performed at Nordson Corporation, was designed to intentionally vary those factors suspected of not having been adequately controlled in the two previous tests; the objective of this design was to see if those factors were responsible for the variation in TE's. The results of the third test were evaluated for their relative impact on TE. Six factors were determined to have a significant effect on TE for at least one spray gun type. The effect of these factors was enough to have been responsible for the differences between the first two tests. Recommendations are made in Section 8 to revise the test plan to properly specify all significant factors.

CONTENTS

Abstract ii
Figures v
Tables vi
Abbreviations and Unit Conversions viii
Acknowledgments ix

1. Introduction 1
2. Literature Search 3
3. Steering Committee 4
4. Transfer Efficiency Test Methods 6
   Industrial Test Methods 6
   Standardized EPA TE Test Method 6
   Improvements to Test Procedure 12
   Draft Transfer Efficiency Test Procedure . 14
5. Phase I Laboratory Test 35
   Facilities 35
   Description of Paints 35
   Mass Flow Comparison Test 40
   Test Parameters 42
   Phase I Test Results 49
   Transfer Efficiency Test Results 53
   Weight Percent Solids Test Results 61
   Mass Flow Comparison Test Results 61
6. Phase II Laboratory Test 67
   Facilities 67
   Description of Paints 67
   Test Parameters 70
   Test Sequence 70
   Foil Handling Procedures 73
   QA/QC Procedures 73
   Test Results 73
7. Test Comparison 91
   Effect of Foil Wrap Technique - Vertical Cylinder 91
   Comparison of Interlaboratory Variances . . 93
   Analysis of Variance for Paint, Laboratory 95
   Test Reproducibility 98

CONTENTS
(Continued)

8. Third Laboratory Test 102
Facilities 102
Description of Paint 102
QA/QC Procedures 102
Test Design 104
Test Parameters 106
Test Sequence 106
Solvent-Only Run 117
Data Analysis 117

9. Conclusions and Recommendations 124

Bibliography 126

Appendix A - Worth Assessment Model of TE Test Methods . 130

Appendix B - Screening Procedure/Multiple Linear Regression 138

FIGURES

Number		Page
1	Set-up for paint supply equipment and platform scales	20
2	Permissible methods for measuring conveyor speed	24
3	Target configurations for air atomized conventional and electrostatic spray guns	28
4	Target configuration for high speed bell	29
5	Ransburg vertical cylinder wrapping technique	30
6	Flat panel foil attachment technique	31
7	Foil attachment techniques for vertical cylinder and flat panel targets, PPG test, September 1982	45
8	Comparison of vertical cylinder and semitubular target configurations	57
9	Foil attachment techniques for vertical cylinder (VC) and flat panel (FP) targets proposed for Ransburg test	74

TABLES

Number		Page
1	Summary of Measurement Methodologies for Paint Spray Transfer Efficiency	7
2	Summary of Paint Spray Transfer Efficiency Test Methods Used by Industry	9
3	Summary of Paint Spray and Peripheral Equipment Specifications	36
4	Test Equipment Specifications	37
5	Measured Parameters and Rated Measurement Accuracy	38
6	Summary of Recorded Paint Specifications	39
7	Nomenclature for Spray Painting Transfer Efficiency Tests	46
8	Transfer Efficiency Test Sequence at PPG September 1982	48
9	Summary of Transfer Efficiency Test Results	50
10	Results of Bartlett's Test for Evaluation of Poolability of Variances at 95% Level of Confidence	52
11	Summary of Equipment Operating Conditions for Air Atomized Electrostatic and Conventional Spray Guns	54
12	Summary of Equipment Operating Conditions for High Speed Bell	55
13	Summary of TE Test Results for Air Atomized Electrostatic Spray Equipment	56
14	Summary of TE Test Results for Air Atomized Conventional Spray Equipment	59
15	Summary of TE Test Results for High Speed Bell Coating Equipment	60
16	Summary of Weight Solids Test Results	62
17	Test Equipment Specifications for Mass Flow Comparison Tests	63
18	Paint Specification for Mass Flow Comparison Tests	64
19	Equipment Specifications and Operating Conditions for Mass Flow Comparison Test	65
20	Mass Flow Comparison Test Results	66
21	Summary of Reported Paint Spray and Peripheral Equipment Specifications for Ransburg Test	68

Number		Page
22	Summary of Paint Properties	69
23	Estimation of Required TE Test Sample Size for Future Laboratory Tests	71
24	Test Matrix for Phase II Laboratory Tests of TE Standard Test Method	72
25	Summary of TE Test Results - Ransburg Test	77
26	Results of Bartlett's Test for Evaluation of Poolability of Variances at 95% Level of Confidence	78
27	Transfer Efficiency Data, Ransburg Laboratory Test	79
28	AAE Paint Spray and Peripheral Equipment Specifications	81
29	AAC Paint Spray and Peripheral Equipment Specifications	84
30	HSB Paint Spray and Peripheral Equipment Specifications	86
31	Transfer Efficiency Data	89
32	Tests to Determine Effect of Foil Attachment Method AAC-67-VC: Tape Wrap Method	92
33	Test to Determine Effect of Foil Attachment Method AAC-67-VC: Crimp Method	92
34	Comparison of Variances for Tests at each Laboratory	94
35	Analysis of Variance - Transfer Efficiency	95
36	ANOVA Results for Paint and Laboratory	97
37	Transfer Efficiency Comparison	98
38	Paint Specifications	103
39	AOAC Screening Test Design	105
40	Air Atomized Electrostatic Test Matrix and Results (Nordson)	107
41	High Speed Bell Test Matrix and Results (Nordson)	108
42	Air Atomized Conventional Test Matrix and Results (Nordson)	109
43	Nordson Test Equipment Specifications	110
44	AAE Paint Spray and Peripheral Equipment Specifications (Nordson)	111
45	AAE Equipment Operating Conditions (Nordson)	112
46	HSB Equipment Operating Conditions (Nordson)	113
47	HSB Paint Spray and Peripheral Equipment Specifications (Nordson)	114
48	AAC Equipment Operating Conditions (Nordson)	115
49	AAC Paint Spray and Peripheral Equipment Specifications (Nordson)	116
50	Screening Experiment Analysis Tabulated Values of Variance and Contrasts	118
51	ANOVA Results for Screening Test	119
52	Regression Models Derived from the Screening Tests	121
53	Predicted Transfer Efficiency Results (PPG and Ransburg)	123

LIST OF ABBREVIATIONS AND UNIT CONVERSIONS

ABBREVIATIONS

AOAC	-- Association of Official Analytical Chemists
ASTM	-- American Society for Testing and Materials
AAC	-- air atomized conventional paint spray equipment
AAE	-- air atomized electrostatic paint spray equipment
EPA	-- United States Environmental Protection Agency
FP	-- flat panel (target configuration)
HSB	-- high speed bell paint spray equipment
QA/QC	-- quality assurance/quality control
TE	-- transfer efficiency
VC	-- vertical cylinder (target configuration)
VOC	-- volatile organic compounds

UNIT CONVERSIONS

To go from	To	Multiply by
°C	°F	1.8°C + 32
cm	in	2.54
g	lb	0.0022
kg	lb	2.204
kg/L	lb/gal	8.328
kPa	psig	0.145 kPa -14.7
L	gal	0.264
m	ft	3.281
m	mils	3.937×10^4
m/s	ft/min (fpm)	196.86
m^3/s	ft^3/min	2118.8
rps	rpm	0.017
s	min	60

ACKNOWLEDGMENTS

The contributions of PPG Industries, Ransburg Electrostatic Equipment, and Nordson Corporation are gratefully acknowledged. These companies donated laboratory facilities, test equipment and supplies, and provided technical support for the tests described herein.

The Spray Painting Transfer Efficiency Steering Committee has provided considerable help and constructive suggestions for this project. This committee's contributions have been invaluable.

SECTION 1

INTRODUCTION

Spray Painting Transfer Efficiency (TE) is a measurement of how much paint actually coats a surface compared with the total paint available to coat that surface. Historically, the spray painting industry has developed its own methods for determining TE. These methods vary from company to company and in their objectives. The measurements are used by the coatings industry to optimize on-line spraying; they are used by manufacturers to develop more efficient spray equipment; and they are used to minimize losses throughout the industry. More recently the need to determine TE has a new aspect: TE can be used to quantify emissions from these sources.

The U.S. Environmental Protection Agency (EPA) has been charged by Congress via the Clean Air Act to quantify and control emissions of volatile organic compounds (VOC). Acting in response to this congressional edict, EPA has designed a program to standardize TE test methods. Phase I of this effort examined the TE methods currently used. Based on these methods, a standardized procedure was proposed and tested at PPG Industries in September 1982. Three types of spray painting equipment and two types of paint were tested. The results are documented in Section 5. The PPG test established the test method as a viable laboratory procedure, with standard deviation of 2.5.

A second laboratory test was performed in March 1983, at Ransburg Corporation to further develop the proposed test method (Phase II). The same paints and equipment configurations were tested. The results of these tests are included in Section 6. The standard deviation of the second test was 1.8.

The TE's varied considerably between laboratories. Analysis of the test data from Phase I and Phase II showed some factors were not adequately controlled from test to test. (The data comparison and explanation is made in Section 7 of this report.)

A third laboratory test was conducted at Nordson Corporation as a screening procedure to establish the relative effects of previously uncontrolled factors. In the screening test each of these factors was intentionally varied in such a way as to facilitate evaluation of the effect of each factor. The evaluation found six factors to have significant effects on TE for at least one of the three spray gun types tested:

- Booth air rate (at target plane), fpm
- Shaping air, psig
- Atomizing air, psig
- Voltage at tip, kV
- Paint discharge technique
- Paint mass flow, g/s

Recommendations are made in Section 8 to revise the draft test plan to properly specify all significant factors. The draft TE test method thus developed is included in Section 4.

SECTION 2

LITERATURE SEARCH

An extensive literature search was performed to document the state of the art in TE determination. Considerable information was collected on current TE methodologies, available equipment, and necessary measurements. This information was collected from vendors, manufacturers, journals, DIALOG (on-line search in Compendex), EPA Publications Bibliography, and others. A list of the most useful references is in the Bibliography.

Considerable research into current TE methods was required in developing the standardized laboratory method presented in Section 4. As part of developing the test procedure, appropriate paint formulations and equipment configurations were evaluated. Personal visits were made to General Motors, Ransburg, Nordson, and PPG.

Some of the people contacted during the literature search were selected to the Steering Committee for this project. The members of the Steering Committee represent divergent experience and interest in the TE project. Their names and affiliations appear in Section 3.

SECTION 3

STEERING COMMITTEE

CENTEC assembled a Steering Committee made up of industry and EPA representatives to provide consultation and guidance for the TE program. The industrial members of this committee were unpaid and contributed their time to the project at their own expense

The Steering Committee was responsible for reviewing the technical aspects and results from this project. The participation of a diverse Steering Committee assures the interest of each group was recognized within the technical objectives of this project.

The following people are members of the Spray Painting Transfer Efficiency Steering Committee:

Charles H. Darvin Physical Scientist Industrial Processes Branch U.S. EPA, Air and Energy Engineering Research Laboratory Research Triangle Park, NC 27711	EPA Project Officer
David I. Salman U. S. EPA, OAQPS, MD-13 Research Triangle Park, NC 27711	Representing EPA
Charles M. Rowan, Jr. CENTEC Corporation 11260 Roger Bacon Drive Reston, VA 22090	Representing Project Contractor
Gregory A. Conner Davidson Rubber Division Ex-Cell-O Corporation Industrial Park Dover, NH 03820	Representing Industry, Coatings Chemist
John Lipscomb Milwaukee Solvents & Chemicals Corp. P. O.Box 444 Butler, WI 53007	Representing the Chemical Coaters' Association

Albert Hungerford Butler Manufacturing Co. 1020 South Henderson St. Galesburg, IL 61401	Representing Industry, Paint Applicator
Mike Tersillo Project Leader Applications Group PPG Industries, Inc. R&D Center, P. O. Box 9 Allison Park, PA 15101	Representing Industry, Paint Manufacturer
Steven J. Gunsel Nordson Corpation 555 Jackson Street P. O. Box 151 Amherst, OH 44001	Representing Industry, Spray Equipment Manufacturer
Robert Lukes General Electric Co. Bldg. 35, Room 1117 Appliance Park Louisville, KY 40225	Representing Industry, Paint Applicator
Eugene A. Praschan Engineering Group Manager Fisher Body Division of General Motors Corp. 30001 Van Dyke Warren, MI 48909	Representing Industry, Paint Applicator
Al Chasan Coatings, Paints & Preservation Branch, Code 2841 Naval Ship Research and Development Center Annapolis, MD 21402	Representing the Navy, High Performance
E. W. Drum Director, Environmental Affairs Ransburg Electrostatic Equipment 3939 West 56th Street Indianapolis, IN 46254	Representing Industry, Spray Equipment Manufacturer

SECTION 4

TRANSFER EFFICIENCY TEST METHODS

INDUSTRIAL TEST METHODS

A number of TE test methods are currently used by industry. In all of these test methods, three basic measurements are necessary:

- The amount of solids in the paint
- The amount of paint sprayed
- The amount of solids deposited on the target

These amounts may be determined by weight or by volume. Typical methods are shown in Table 1. The paint may be deposited on a target, shim, or work piece. Some of the test methods are strictly laboratory procedures, while others are for production line TE determination.

CENTEC considered over a dozen test methods in developing the standardized EPA test method. A summary of paint spray TE test methods considered and comments on these methods are presented in Table 2.

STANDARDIZED EPA TE TEST METHOD

The EPA test procedure was developed to have the best qualities of previous methods. Since it was desirable to have a controlled standardized procedure, production line tests were ruled out. Production line tests are usually made at production conveyor speeds using foil-coated dummy targets shaped like the product to be coated. These characteristics are all site specific.

The EPA test procedure was developed for ease of performance in standard industrial spray paint laboratories. For verification tests, three major types of equipment (air atomized conventional, air-atomized electrostatic, and high speed bell) and two types of paint (65 and 52 weight percent solids) were selected.

TABLE 1. SUMMARY OF MEASUREMENT METHODOLOGIES FOR PAINT SPRAY TRANSFER EFFICIENCY

Paint Solids Content (1)	Paint Spray Flow Rate	Paint Solids on Target
By Weight	By Weight	By Weight
1. Measure VOC in nonwaterborne paints per ASTM D-2369-81.	1. Gun nozzle capture (bucket and stopwatch).	A. Where target is product 1. Target weight change (load cell or scales)
2. Measure VOC and water in waterborne paints per ASTM D-2369-81 and ASTM D-3792-79 (or D-4017-81).	2. Mass flow meter (Micro Motion type) and time clock.	2. Foil on target weight change (scales).
3. Measure density per ASTM D-1475-80.	3. Load cell or scales for paint mix tank.	3. Shim(s) on target weight change (scales and weight conversion via area ratio)
4. Measure weight solids per ASTM D-1644-81. (2)	4. Dipstick on or other level measuring device on paint mix tank (convert by density to mass flow).	4. Target solvent stripping, distillation and weighing.
		B. Where target is simulated shape (flat plate, vertical cylinders, etc.). 1. Target weight change (load cell or scales). 2. Foil on target weight change (scales). 3. Shim on target weight change (scales and weight conversion via area ratio).

TABLE 1 (continued)

Paint Solids Content (1)	Paint Spray Flow Rate	Paint Solids on Target
By Volume	By Volume	By Volume
1. Determine volume fraction of paint solids by calculation using manufacturer's formulation.	1. Dipstick on paint mix tank.	A. Where target is product 1. Target coating thickness and area.
2. Measure volume solids per ASTM D-2697-79.	2. Paint inventory change.	2. Foil on target thickness area.
		3. Shim(s) on target thickness and area (convert via area ratio).
		B. Where target is simulated shape 1. Target coating thickness and area.
		2. Foil on target thickness and area.
		3. Shim(s) on target thickness and area (convert via area ratio).

(1) Reference Method 24 -- Revision to Appendix A of 40 CFR Part 60, Final Rule.

(2) Method generally used by industry.

TABLE 2. SUMMARY OF PAINT SPRAY TRANSFER EFFICIENCY TEST METHODS USED BY INDUSTRY

Summary of Methods	Comments
1. Foil on Simulated Shape; Weight Change (Lab) - Measure weight solids per ASTM D-1644-81 (or similar method); measure paint spray flow rate by capturing atomizer output in unatomized state; weigh foil before and after drying (use same curing schedule as for paint samples).	1. Ability to accurately measure paint spray flow is questionable (industry experience with calibrated mass flow meter indicates that this method has inherent inaccuracy); overall, method looks good, e.g., dummy targets used before and after main target to simulate production situation. Foil and simulated shape thermal inertia -- equivalent bake schedule problem.
2. Shim on Product; Thickness and Area (Plant) - Use theoretical mileage data (ft^2/uncut gallon of paint) from paint supplier; measure paint spray flow rate by capturing atomizer output in unatomized state; measure shim dry film thickness and overall product (part) area using GE magnetic thickness gage and flexible tape.	2. Potential variability in coating thickness means determination of overall "average" film thickness may have inherent repeatability problem -- multiple shims helps minimize this problem; question of reliability on manufacturer's data for theoretical paint mileage; paint spray flow measurement in question (see comment 1); questionable ability to measure film thickness accurately -- repeated calibration may help minimize this problem; ability to measure area accurately is a concern.
3. Product Coating and Area (Plant) - Use theoretical mileage data (ft^2/uncut gallon of paint) from paint supplier; measure paint spray flow rate by capturing atomizer output in unatomized state; measure actual product dry film thickness and overall product (part) area.	3. Same as Comment 2; additional disadvantage is limitation to ferromagnetic or aluminum substrate (magnetic or eddy current applications).
4. Paint Inventory/Product Coating Thickness and Area (Plant) - Use production data (parts coated, surface area, gallons of paint used); use theoretical mileage data (ft^2/uncut gallon of paint) from paint supplier; use QC data for average film thickness.	4. Question of reliability on manufacturer's data for theoretical paint mileage; ability to measure film thickness accurately is in question; ability to measure area accurately is a concern.

TABLE 2 (continued)

Summary of Methods	Comments
5. Foil on Simulated Shape; Weight Change (Lab) - Measure weight solids per ASTM D-1644-81; measure paint spray flow rate by mass flow meter (Micro Motion); weigh foil attached to flat panel before and after drying (using same curing schedule as for paint samples).	5. Only part of foil panel is coated and thus lab test does not accurately simulate plant production situation -- this shortcoming, however, is true of essentially all lab tests; other problem is that of thermal inertia (foil & rack) and equivalence of bake schedule.
6. Foil on Simulated Shape; Weight Change (Lab) - Measure weight solids per ASTM D-1644-81; measure paint spray flow rate by capturing atomizer output in unatomized state; weigh foil attached to flat panel before and after drying -- remove foil from rack prior to drying to better simulate same bake schedule as paint samples.	6. Problem with accurate measurement of paint spray flow (see Comment 1); good approach on paint drying procedure (target and sample).
7. Foil on Simulated Shape; Weight Change (Lab) - Same as Method 6 except that simulated shape is 2" x 4" lumber.	7. Same advantages and disadvantages as Comment 6.
8. Foil on Product; Weight Change (Lab) - Measure weight solids per ASTM D-1644-81; measure paint use by weighing paint supply apparatus before and after spraying; weigh foil before and after drying -- initial foil weight determined by subtraction process for amount of foil remaining on roll.	8. Problem with bake schedule since entire car body dried with foil attached (equivalalence problem with sample drying method); hysteresis (repeatability) concern with use of load cell.
9. Foil on Product; Volume (Lab) - Measure paint density per ASTM D 1475-60 (1980); measure paint use by weighing apparatus before and after spraying; measure film thickness on foil with micrometer; tape measure for area; measure volume fraction solids per ASTM D 2697-73.	9. Average film thickness determination requires multiple (measurements to obtain good statistical average); complexity of product shape makes area determination a tedious process; load cell hysteresis problem.
10. Product Coating; Weight (Plant) - Measure paint solids on target by solvent stripping, distillation (evaporation, and weighing of dried solids).	10. Load cell hysteresis (repeatability) problem; accuracy was supposedly good on load cell (1,000 lb $\pm$ 0.02 lb), however, as confirmed by good correlation with lab TE weight method (foil on body -- refer to Method 8).

TABLE 2 (continued)

Summary of Methods	Comments
11. Product Coating Thickness & Area (Plant) - Measure paint volume solids per ASTM D 2697-73; measure average film thickness with eddy current instrument; measure area with flexible tape; measure paint use be dipstick in mix tank.	11. Average film thickness determined by numerous measurements; car body divided into two general area categories to help account for for variances in film thickness for low appearance (large variation in film thickness) and high appearance (small variation in film thickness) areas.
12. Product Coating; Weight Change (Plant) - Measure paint density per ASTM D 1475-60 (1980); measure paint use by dipstick in mix tank; measure weight gain of car body by load cell; measure paint weight solids per ASTM D 1644-81.	12. Incomplete method, however, concept may have some merit for small parts applications.
	13. Same as Comment 4.

Two target configurations were selected for the standardized test. A set of four flat panel targets was selected to typify TE's for large, relatively flat industrial targets. A set of four vertical cylinder targets was selected to typify TE's for coating smaller, more intricate targets. These targets, mounted in a prescribed configuration, constitute the test panels for the EPA draft TE laboratory method.

The following test procedure is similar to the one used for the two laboratory tests described in Sections 5 and 6, but reflects some improvements made to the procedure as a result of subsequent test experience.

IMPROVEMENTS TO TEST PROCEDURE

As a result of actual test experience, several recommendations can be made to clarify and standardize the test procedure. First, it is recommended that the booth air flow rate be standardized. Since most booth exhaust fans are not rate-adjustable, booths with 0.51-m/s (100-ft/min) linear flow rates should be selected for testing. This is a standard booth size that should be available to testers. The exhaust fans should be used at all times to keep air-borne solvent and paint levels at a minimum.

Second, the test procedure must be modified to provide identical paint delivery to the targets. The paint flow should be initiated from the same position (relative to the targets) from test to test. A consistent starting point and delivery is expected to lead to more consistent TE's between laboratories, especially for electrostatic equipment. It is recommended to use the timing marks at the first and last scavengers as paint start/stop marks (refer to the following section, "Draft Transfer Efficiency Test Procedure"). The rationale for this recommendation is in Section 7.

Third, the electrostatic equipment voltages must be consistent between laboratories. Fixed power supplies may vary by 30 percent in output voltage, and cable, gun, and paint characteristics vary considerably between laboratories. Variable power supplies will be required to keep equivalent voltages on subsequent tests.

Fourth, calibration of all pressure gages involved before the test is advisable. Gages on the paint supply tank, paint at the spray gun, atomizing (or turbine) air pressure, and shaping air pressure should be calibrated before the test. The requirement assures equivalent operating pressures between laboratories.

Fifth, spray guns should be equipped with new fluid tips at the beginning of the test.

The test procedure should provide more guidance in acceptable techniques for determining paint characteristics. The recommended technique must be readily available to laboratories. Consistent documentation will avert confusion during the test and uncertainty when comparing results.

Finally, there has been some speculation about the effect of having other grounded equipment near the target assembly. Although this effect has not been directly observed, it seems prudent to keep all grounded objects away from the targets. A minimum 3 meters (10 feet) is recommended as the distance to walls or other grounds.

DRAFT TRANSFER EFFICIENCY TEST PROCEDURE[1]

Equipment Calibration

Perform calibration of the platform scale once per week or each time that it is moved and leveled, whichever occurs more frequently. Perform calibration of the laboratory scale once every 3 months. Calibrate all pressure gages.

Test Procedure

A. Select test equipment. Using Data Sheet 1, document the test equipment specifications. Be sure to check the information and sign the form.

---

[1]Many conventional industrial units are used throughout the test procedure to accommodate participating laboratories and to minimize conversion errors on site. Metric conversions are made as required as shown in the conversion list at the front of the report.

Data Sheet 1

Test Equipment Specifications

Test Date: _____ Test No.: _____ Data by/Checked by: _____

A. Weight Percent Solids Measurement Equipment
   1. Laboratory Scales
      a. Manufacturer _____
      b. Model No. _____
      c. Serial No. _____
      d. Capacity, g _____
      e. Rated accuracy, g _____
   2. Foil Dishes
      a. Type _____
      b. Size _____
   3. Syringe
      a. Type _____
      b. Capacity, mL _____
   4. Solvent Type _____
B. Conveyor Speed Measurement Equipment
   1. Rule
      a. Type _____
      b. Graduations _____
   2. Electronic Timer
      a. Type _____
      b. Manufacturer _____
      c. Model No. _____
      d. Serial No. _____
      e. Rated accuracy, s _____
C. Mass Flow Measurement Equipment
   1. Platform Scales
      a. Manufacturer _____
      b. Model No. _____
      c. Serial No. _____
      d. Capacity, kg _____
      e. Rated accuracy, g _____
   2. Stopwatch
      a. Manufacturer _____
      b. Model No. _____
      c. Serial No. _____
      d. Rated accuracy, s _____
D. Target Foil
   1. Type _____
   2. Nominal Thickness, mils _____
   3. Temper _____
E. Wet Film Measurement Equipment
      a. Manufacturer _____
      b. Model No. _____

B. Select coating type to be used. Using Data Sheet 2, document the paint characteristics. Again, check your information and sign the form.

Data Sheet 2

Paint Specifications

Test Date: _____ Test No.: _____ Data by/Checked by: _____

1. Paint Type	_____
2. Resin Type	_____
3. Manufacturer	_____
4. Manufacturer's Paint ID No.	_____
5. Lot No.	_____
6. Color	_____
7. Recommended Cure Schedule	min. @ °F
8. Viscosity (uncut)	sec.# Ford Cup @ °F
9. Reducing Solvent	_____
10. Vol. of Solvent Put into Vol. Paint	(vol) solvent in (vol) paint
11. Viscosity - Spray (cut)*	sec.# Ford Cup @ °F
12. Wt./Gallon - Spray	lbs/gal
13. Wt. Solids - Spray	%
14. Resistivity or Conductance	MΩ μA

*Use ASTM D-1200-70, "Viscosity of Paints, Varnishes, and Lacquers by Ford Viscosity Cup." Viscosity may also be determined by ASTM D-3794, Part 6 (Zahn Cup method) in addition to the Ford Cup measurements.

C. Set up paint supply equipment and platform scale. Using Data Sheet 3, document the paint supply equipment specifications. Be sure to check your information and sign the form.

Data Sheet 3

Paint Spray and Peripheral Equipment Specifications

Test Date: _____ Test No.: _____ Data by/Chkd by: _____

A. Paint Supply Tank

1. Type _____
2. Manufacturer _____
3. Model No. _____
4. Serial No. _____
5. Rated Capacity, gal _____

B. Paint Spray Equipment

1. Type _____
2. Manufacturer _____
3. Model No. _____
4. Serial No. _____
5. Rated Capacity, cc/min _____
6. Air Cap _____
7. Fluid Tip _____
8. Needle _____

C. Paint Spray Booth

1. Type _____
2. Manufacturer _____
3. Model No. _____
4. Serial No. _____
5. Rated Capacity, cfm _____

D. Conveyor

1. Type _____
2. Manufacturer _____
3. Model No. _____
4. Serial No. _____

E. Forced Draft Oven

1. Type _____
2. Manufacturer _____
3. Model No. _____
4. Serial No. _____

F. Paint Heaters

1. Type _____
2. Manufacturer _____
3. Model No. _____
4. Serial No. _____

D. For electrostatic spray equipment only, ground paint supply equipment and platform scale per Figure 1. NOTE: In accordance with Section 9-8 of NFPA 33 for fixed electrostatic apparatus, measure resistance of equipment to ground (conveyor frame) to insure resistance is less than 1×10^6 Ohm.

E. Using a small glass jar with an airtight lid, take paint grab sample from paint pot. Record test series number on label of jar.

F. Measure weight solids from grab sample using syringe weight difference technique as described in ASTM D-2369-81. Document the cure oven bake schedule and temperature on Data Sheet 4. Be sure you use the cure schedule recommended by the manufacturer on Data Sheet 2. Record raw data and results on Data Sheet 5. Paint weight percent solids should be determined before each test series, at the start of each test day, and periodically between tests.

Arrangement A
Nonelectrostatic Equipment

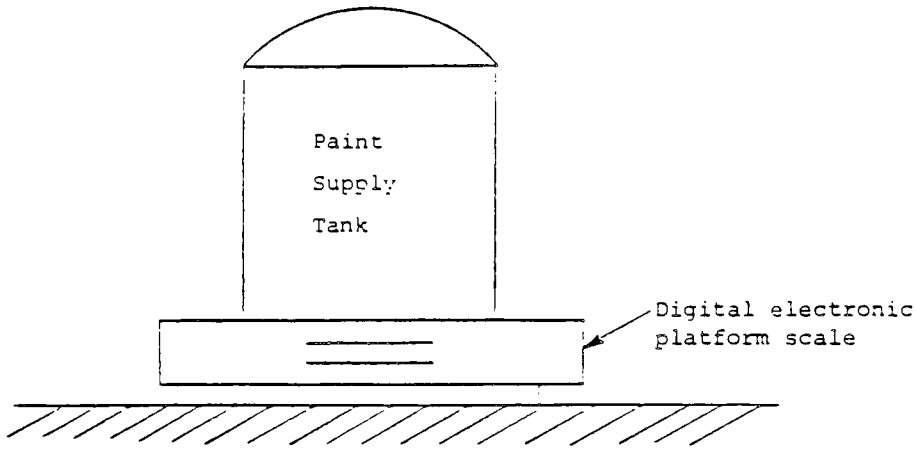

Arrangement B
Electrostatic Equipment

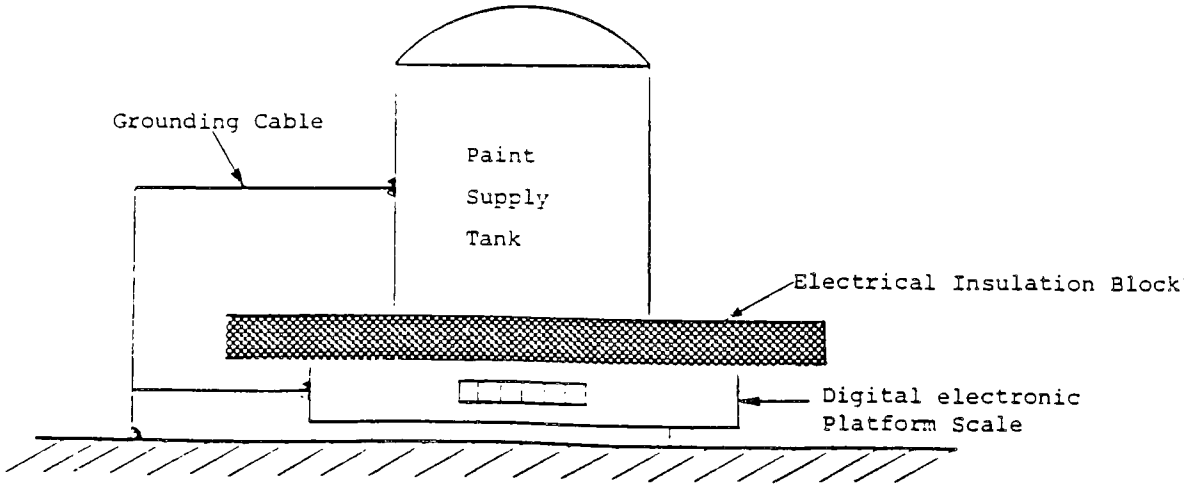

*Block must be capable of preventing current flow from supply tank to ground through the platform scale.

Figure 1. Set-up for Paint Supply Equipment and Platform Scales

Data Sheet 4

Equipment Operating Conditions

Test Date:	Test No.:	Data by/Chkd by:
_____	_____	_____

A. Paint Spray Equipment
   1. Paint Pressure at Paint Pot, psig _____
   2. Paint Pressure at Spray Gun, psig _____
   3. Atomizing/Turbine Air Pressure at Spray Gun, psig _____
   4. Operating Voltage, kV _____
   5. Disk or Bell Speed, rpm _____
      a. With Paint Applied _____
      b. Without Paint Applied _____
   6. Shaping Air for Bell, psig _____
   7. Paint Temperature at Paint Pot, °F _____
   8. Gun to target distance, cm _____
   9. Pump Setting _____

B. Paint Spray Booth
   1. Ambient Temperature, °F _____
   2. Relative Humidity, % _____
   3. Air Flow Velocity, fpm _____
   4. Air Flow Direction _____

C. Target Parameters
   1. Average Wet Film Thickness, mils _____
   2. Average Dry Film Thickness _____
   3. Vertical Paint Coverage, cm (in) _____
   4. Target Height, cm (in) _____
   5. % Vertical Coverage _____
   6. Resistance to Ground, Ohm _____

D. Forced Draft Oven*
   1. Cure Time, minutes
      a. Foil Dish (sample) _____
      b. Target Foil _____

   2. Cure Temperature, °F
      a. Foil Dish (sample) _____
      b. Target Foil _____

E. Paint Heaters
   1. Temperature In, °F _____
   2. Temperature Out, °F _____

F. Conveyor Speed Setpoint, fpm (cm/sec) _____

*Same cure schedule as foils.

Data Sheet 5

Weight Solids Test Data & Results

Test Date: _____ Test No.: _____ Data by/Chkd by: _____

	Sample A	Sample B	Average
1. Syringe Weight			
a. Full, g	_____	_____	
b. Empty, g	_____	_____	
c. Net Wet Paint, g	_____	_____	
2. Dish Weight			
a. After Drying, g	_____	_____	
b. Empty, g	_____	_____	
c. Net Dry Solids, g	_____	_____	
3. % Weight Solids (2c/1c)	_____	_____	_____ A3

NOTES:

1. Actual Cure Schedule _____ min. @ _____ °F

Refer to ASTM 2369-81, Procedure B of "Standard Test Method for Volatile Content of Coatings."

G. Set up the paint spray equipment. Using Data Sheet 3, document specifications for the paint spray equipment and spray booth used in this test.

H. Set up the conveyor speed measuring equipment. This equipment may consist of photoelectric cells or limit switches used in conjunction with an automatic digital timer. Alternatively, the conveyor speed may be measured using timing marks (chalk marks) on the conveyor in conjunction with a hand held stopwatch. Figure 2 shows the permissible methods for conveyor speed measurement. Using Data Sheet 6a, record the horizontal distance between the photo cell or limit switch on/off positions.

METHOD A

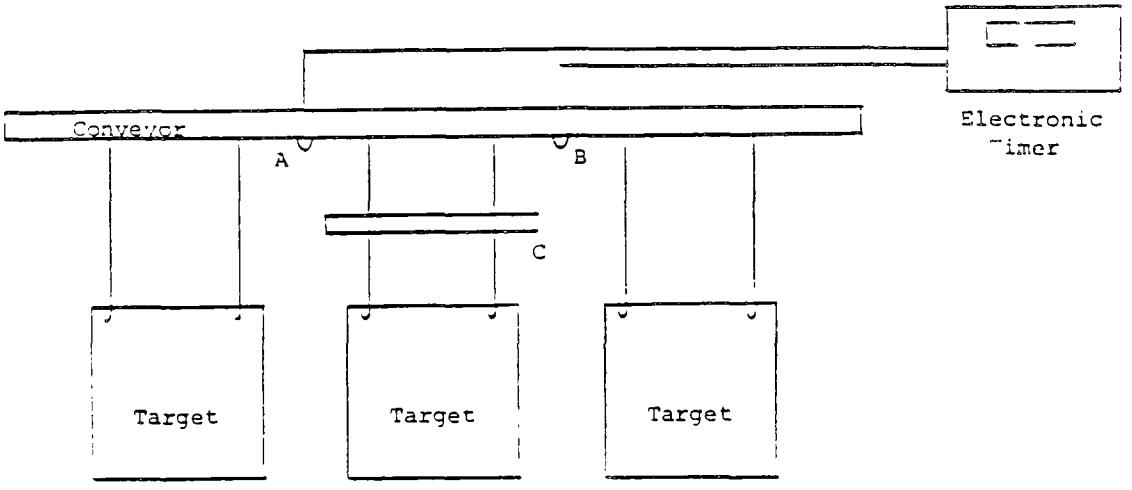

A = Stationary photoelectric cell or limit switch

B = Stationary photoelectric cell or limit switch

C = Moving plate of known width

METHOD B

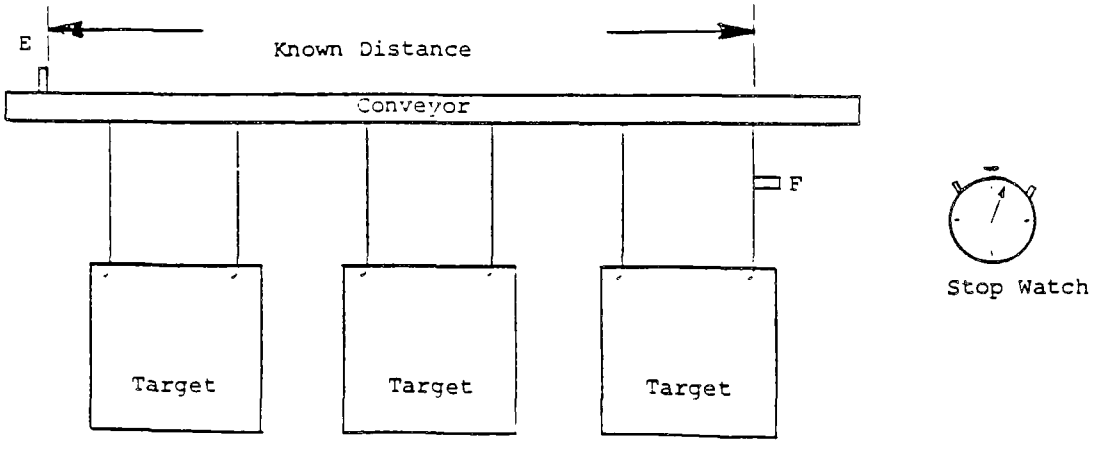

E = Fixed timing mark

F = Moving timing mark

Figure 2. Permissible Methods for Measuring Conveyor Speed

Data Sheet 6a

TE Test Data and Results

Test Date: _____ Test No.: _____ Data by/Checked by: _____

A. Weight Percent Solids (from Data Sheet 5) _____ A3

B. Total Solids Sprayed

1. Paint Spray Flow Rate

   a. Beginning Weight, g _____

   b. End Weight, g _____

   c. Time Between Weighings, s _____

   d. Flow Rate, g/s _____ B1d

2. Conveyor Speed

   a. Distance Between Marks, cm _____

   b. Time Between Marks, s _____

   c. Speed, cm/s _____ B2c

3. Total Effective Target Width, cm* 15.24 B3

4. Total Solids Sprayed, g (A3 x B1d x B3/B2c) _____ B4

* Total effective target width is six inches per foil on flat panel target (on 6" centers), and six inches per cylinder on vertical cylinder target (also on 6" centers). Six inches = 15.24 cm.

Data Sheet 6b

TE Test Data and Results

Test Date: _____ Test No.: _____ Data by/Checked by: _____

C. Total Solids on Target
Flat Panel Target

Foil Weight After Drying, g:

Foil # 1	2	3	4	Total
_____	_____	_____	_____	_____

Foil Weight Before Spraying, g:

_____	_____	_____	_____	_____

Net Dry Solids, g:

_____	_____	_____	_____	_____

D. Vertical Cylinder Target

Foil Weight After Drying, g:

Foil # 1	2	3	4	Total
_____	_____	_____	_____	_____

Foil Weight Before Spraying, g:

_____	_____	_____	_____	_____

Net Dry Solids, g:

_____	_____	_____	_____	_____

E. Transfer Efficiency (by weight)[1]

Flat Panel Target _____

Vertical Cylinder Target _____

---

1. $\frac{\text{Net Dry Solids}}{\text{Total Solids Sprayed}} \times 100 = \text{TE}$

I. Set up targets in accordance with Figure 3 or 4, as appropriate. Target configuration, material, and spacing is critical. Scavengers are metallic, as is the FP target. Cut 6-inch-wide aluminum foil strips to required length for each target. Label each foil strip with the appropriate nomenclature. (See Section 5 for nomenclature.) Weigh each foil strip and record value on foil and on Data Sheet 6b.

J. Attach foils to the vertical cylinder and/or flat panel targets as shown on Figure 5 or 6, as appropriate. Perform resistance check to verify adequacy of grounding. Per NFPA 33 Section 9-8, resistance shall be less than 1×10^6 ohms.

K. In accordance with Figure 3 or 4, attach shim stock to scavenger in order to measure wet film thickness.

L. Adjust all equipment operating parameters, i.e., gun to target distance, atomizing air press, paint pot pressure, shaping air pressure, turbine air pressure, etc., to desired values. Record equipment operating parameters on Data Sheet 4. NOTE: In accordance with Section 9-7 of NFPA 33 for fixed electrostatic apparatus, the gun to target distance shall be at least twice the sparking distance.

M. Check spray gun condition. Install new fluid tip, air cap, and needle.

N. For electrostatic spray equipment, measure the gun tip operating voltage (with lines full of paint, but gun not operating). Adjust to desired voltage and record on Data Sheet 4.

O. Check conveyor clock, stopwatch, and platform scale to ensure that all have been zeroed (reset) and that the scales are in the tare mode.

P. Turn on conveyor. As the leading edge of the first scavenger passes in front of the gun, turn on paint spray equipment and initiate flow; simultaneously, start stopwatch.

Q. As the trailing edge of the last scavenger passes in front of the gun area, stop stopwatch and paint spray flow simultaneously. Turn off conveyor. Record platform scale, conveyor clock, and stopwatch readings on Data Sheet 6a.

R. Measure wet film thickness on shim plate and record on Data Sheet 4, line C-1.

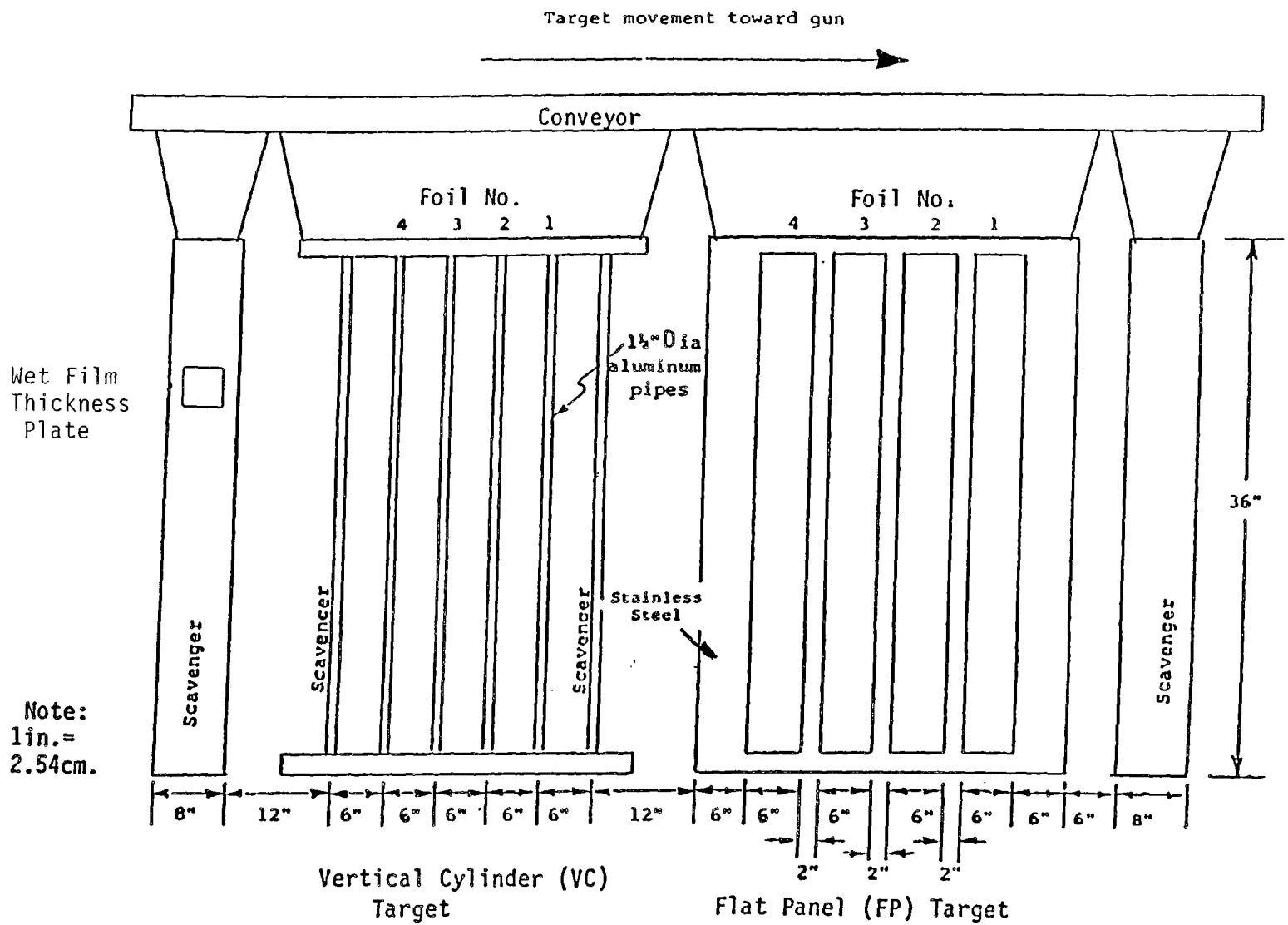

Figure 3 Target configuration for air atomized conventional and electrostatic spray guns.

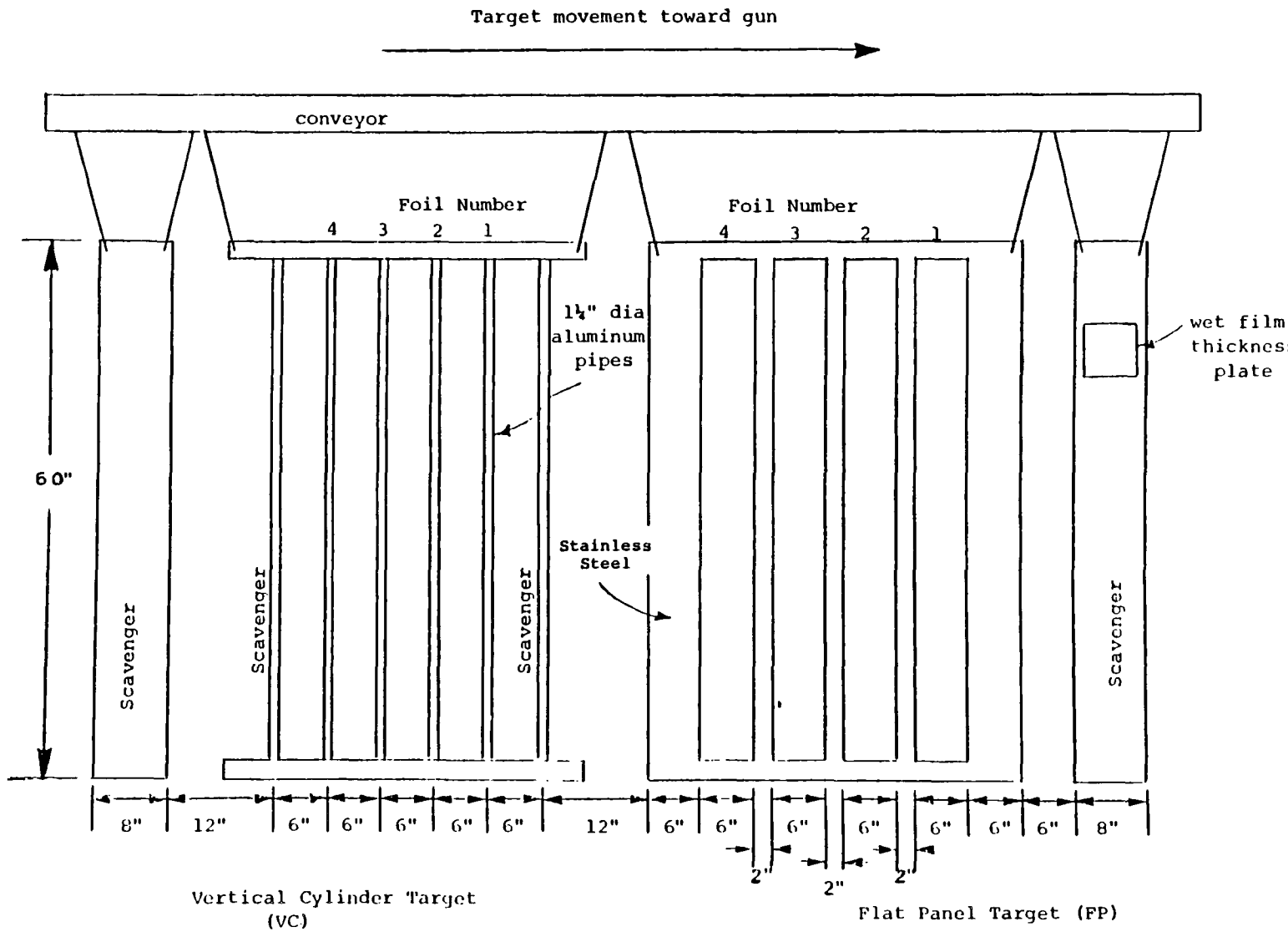

Figure 4 . Target Configuration for High Speed Bell

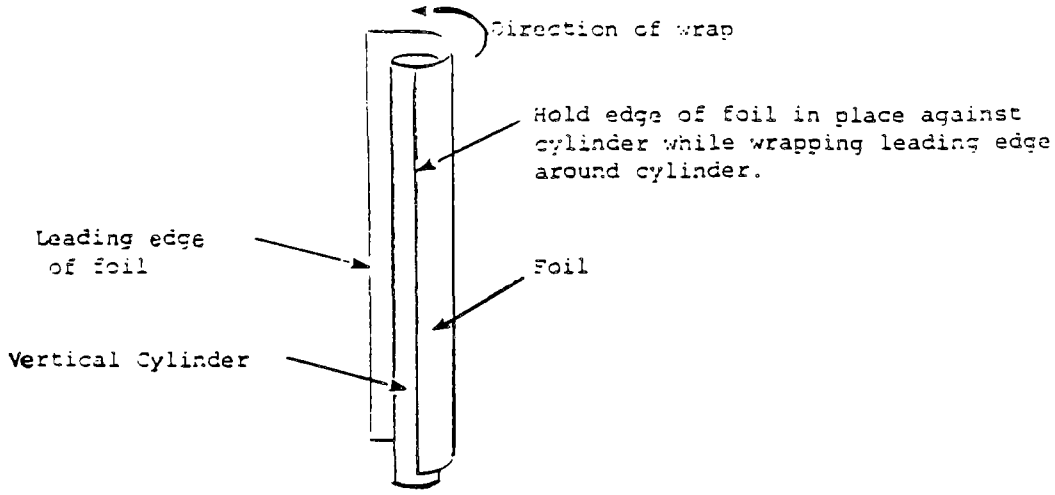

1. Wrap vertical cylinder targets with cylinders mounted on target bracket (See Figure 3 and 4). Wrap so the leading edge forms a seam away from the direction of spray.

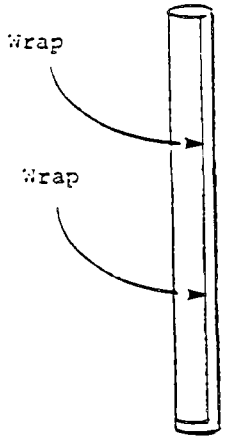

As leading edge overlaps starting edge, solidly "grip" foil into place by grasping foil-covered cylinder.

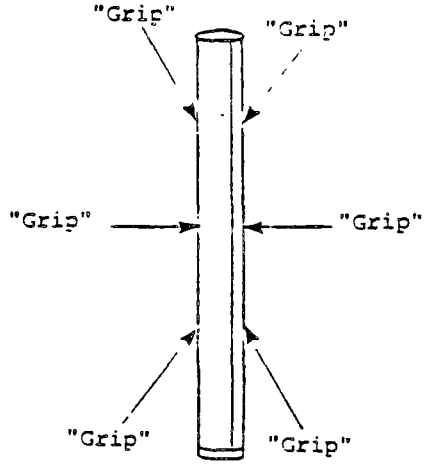

Secure foil on cylinder by gripping the length of the cylinder. Foil will have a uniformly wrinkled surface.

Figure 5. Ransburg Vertical Cylinder Wrapping Technique

FLAT PANEL TARGET

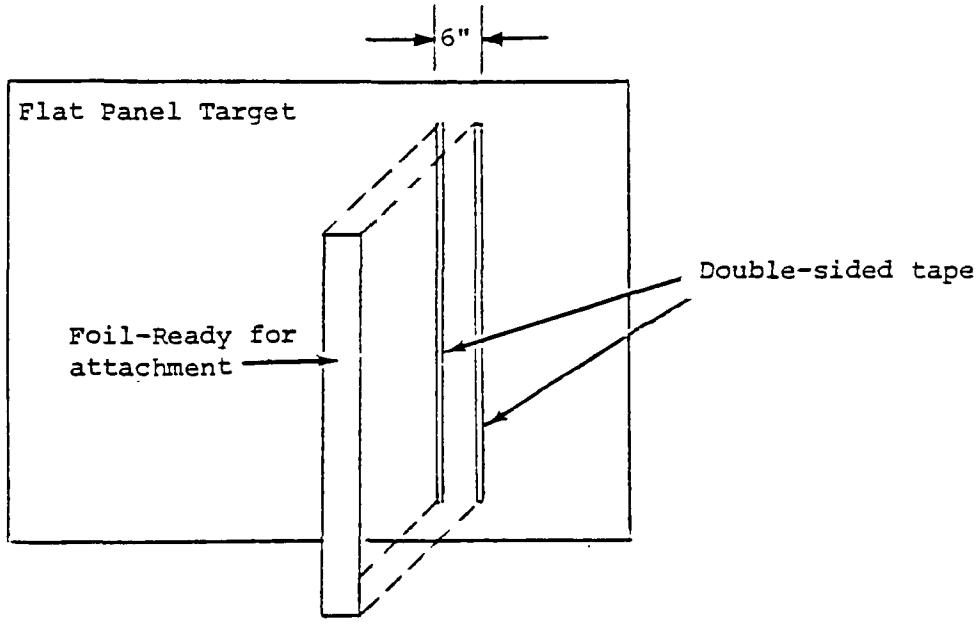

Figure 6. Flat Panel Foil Attachment Technique

S. Remove foils from targets and securely attach to oven racks so all painted surfaces are exposed for uniform drying. Spring clips or tacks may be used to mount wet targets. Insert racks in oven and bake at recommended schedule per Data Sheet 2. Flash time (the time between spraying and getting the targets into the oven) should be kept to a minimum. Five minutes is considered excessive flash time. Set oven timer per recommended schedule.

T. Remove foils from oven and record actual bake schedule on Data Sheet 4. Weigh foils and record weight on each foil and on Data Sheet 6b. After weighing, store foils in appropriately labeled plastic bags, i.e., bags that have test run number identified.

U. Perform TE calculations using the average weight solids for all the samples taken for the test run. Document results on Data Sheet 6b.

V. After completing a test series, perform statistical analysis as indicated on Data Sheet 7. Document results of analysis on Data Sheet 7.

W. Repeat above steps (A through S) for each test series.

X. After completing all 12 test series, transfer results of each TE test to Data Sheet 8.

Data Sheet 7

Work Sheet for Calculating Standard Deviation

Test Series: _____

Calculation by: _____

Checked by: _____

Test Run No.	TE, %	$(TE-TE_M)$, %	$(TE-TE_M)^2$, $\%^2$
1			
2			
3			
4			
5			
6			
7			
8			

Totals:[1] n = _____ B = _____ C = _____

$TE_M = B/n$ = _____ (1)

$s = [\ C\ /\ (n-1)]^{0.5}$ = _____ (2)

---

1. TE_M = mean value for transfer efficiency, %:

   where B = $TE_1 + TE_2 + \ldots TE_n$

   and n = Total number of test runs for one test series

   s = Standard deviation, %

   where C = $[(TE_1-TE_M)^2 + (TE_2-TE_M)^2 + \ldots + (TE_n-TE_M)^2]$

Data Sheet 8

Statistical Analysis Summary for TE Test Results

Prepared by: _____

Checked by: _____

Test Series	Number of Test Runs	TE_M, % (1)	Standard Deviation, % (2)	Coefficient of Variation, % (3)

1. TE_M = mean value for transfer efficiency (Refer to Data Sheet 7)
2. Refer to Data Sheet 7
3. (Standard Deviation / TE_M) x 100

SECTION 5

PHASE I LABORATORY TEST

FACILITIES

The original laboratory test was performed September 24 through 30, 1982, at PPG Industries' Allison Park, Pennsylvania, laboratory. PPG donated the facilities, paints, and technicians for the test.

The Phase I laboratory tests were run in two booths. The air atomized conventional and electrostatic equipment was run in a closed water-wash booth rated at 1.9 m^3/s (4000 ft^3/min). The high speed bell equipment was run in a closed dry-filter booth rated at 4.2 m^3/s (9200 ft^3/min). Exhaust was normal to the targets in both booths. Paint spray and peripheral equipment specifications used for this test are shown in Table 3. The equipment sensitivities are documented in Table 4 and 5. In addition to this equipment, the following items were used for measuring electrical resistance and electrostatic voltage potential:

- Volt-ohm meter; Nordson 790-108 Hand kV Meter.
- High voltage DC meter; 0-100 kV; PCF Group, Inc.; 5,000 megaohm probe; Model HV-100A.

DESCRIPTION OF PAINTS

A 65-percent solids coating and 52-percent solids coating were supplied for testing by PPG. The paint properties are summarized in Table 6. The higher solids coating is typical of a compliance solvent-borne coating for the metal finishing industries. The lower solids coating is an example of an acrylic enamel used in the automotive industry. Paint weight percent solids content was determined by ASTM D-2369-81, except for cure times.

The ASTM method uses syringes to dispense the wet paint into the aluminum weight dishes. Initially, five grab samples were processed for each coating using two weight dishes for each grab sample. At the end of the testing (Thursday, September 9, 1982), an additional grab sample was taken from the 5-gallon can

TABLE 3. SUMMARY OF PAINT SPRAY AND PERIPHERAL EQUIPMENT SPECIFICATIONS (1)

	Air Atomized Electrostatic	Air Atomized Conventional	High Speed Bell
A. Paint Supply Tank			
1. Type	Pressure Pot	Pressure Pot	Positive displacement pump
2. Manufacturer	Binks	Binks	Ransburg
3. Model No.	83-5501	83-5501	9966-9
4. Serial No.	Not available	Not available	062702
5. Rated Capacity, gal	2	2	1 (2)
B. Paint Spray Equipment			
1. Type	Air atom elec	Air atom conv	High speed bell
2. Manufacturer	Nordson	Binks	Ransburg
3. Model No.	AN-8	610	Turbobell
4. Serial No.	Not available	Not available	Not available
5. Rated Capacity, cc/min	Not available	Not available	Not available
6. Air Cap	987	63 PB	Not applicable
7. Fluid Tip	Not available	63 C	Not applicable
8. Needle	Not available	Not available	Not applicable
9. Power supply	EPU-8; 76 kV rated;	Not applicable	Not available
C. Paint Spray Booth			
1. Type	Water wash	Water wash	Dry filter
2. Manufacturer	Binks	Binks	Binks
3. Model No.	Dynaprecipitor®	Dynaprecipitor®	Not available
4. Serial No.	Not available	Not available	Not available
5. Rated Capacity, m^3/s (ft^3/min) estimated	1.9 (4,000)	1.9 (4,000)	4.2 (9,200)
D. Conveyor			
1. Type	Overhead	Overhead	Overhead
2. Manufacturer	Not available	Not available	Not available
3. Model No.	Not available	Not available	Not available
4. Serial No.	Not available	Not available	Not available
E. Forced Draft Oven			
1. Type	Convection	Convection	Convection
2. Manufacturer	Despatch	Despatch	Despatch
3. Model No.	V-29 HD; V-15 HD (3)	V-29 HD; V-15 HD (3)	V-29 HD; V-15 HD (3)
4. Serial No.	Not available	Not available	Not available

(1) No paint heaters were required for these tests.

(2) A 1-gallon can was used to provide paint to the pump suction.

(3) Two different ovens used to dry foils.

TABLE 4. TEST EQUIPMENT SPECIFICATIONS

A. Percent Weight Solids Measurement Equipment	
1. Laboratory Scales	
a. Manufacturer	Mettler
b. Model No.	P1200N
c. Serial No.	558312
d. Capacity, g	1,200
e. Rated accuracy, g	± 0.01
2. Foil Dishes	
a. Type	Aluminum
b. Size	Standard
3. Syringe	
a. Type	Luer
b. Capacity, mL	5
4. Solvent Type	High Solids - Solvesso® 100
	Low Solids - Acetone
B. Conveyor Speed Measurement Equipment	
1. Rule	
a. Type	Flexible Steel Tape
b. Graduations	1/16 inch
2. Electronic Timer	
a. Type	Digital
b. Manufacturer	Lab - Line Instruments, Inc.
c. Model No.	1405
d. Serial No.	Not available
e. Rated Accuracy, s	Not available (1)
C. Mass Flow Measurement Equipment	
1. Platform Scales	
a. Manufacturer	NCI, Inc.
b. Model No.	5780
c. Serial No.	C790482
d. Capacity, kg	90 (2)
e. Rated Accuracy, g	± 5
2. Stopwatch	
a. Manufacturer	Markson Science, Inc.
b. Model No.	Digital
c. Serial No.	26119
d. Rated Accuracy, s	± 0.001% (3)
D. Target Foil	
1. Type	Aluminum
2. Nominal Thickness, mils	1.5
3. Temper	Medium
E. Wet Film Measurement Equipment	
1. Distributor	Paul N. Gardner Co.
2. Model No.	Nordson Type

(1) Per telephone conversation with manufacturer on 10/4/82.
(2) Fitted with 45 kg load cells.
(3) ±0.001% of reading.

TABLE 5. MEASURED PARAMETERS AND RATED MEASUREMENT ACCURACY

Parameter	Test Device	Rated Accuracy
• Weight		
- Aluminum dish	lab scale	± 0.01 g
- Syringe	lab scale	± 0.01 g
- Target foil	lab scale	± 0.01 g
- Paint supply tank	platform scale	± 5 g
• Time		
- Paint capture	stop watch	± 0.001 % (1)
- Conveyor speed	digital timer	Unknown (2)
• Distance		
- Target width	steel rule	± 0.001 m (1/32 inch) (3)
- Conveyor speed	steel rule	± 0.001 m (1/32 inch)

(1) Of reading.

(2) Not available from manufacturer; resolution is ± 0.05 sec (1/2 scale reading of 0.1 sec).

(3) Equivalent to 1/2 of smallest reading.

TABLE 6. SUMMARY OF RECORDED PAINT SPECIFICATIONS

		Paint 1	Paint 2
1.	Paint Type	Enamel	Enamel
2.	Resin Type	Polyester	Acrylic
3.	Manufacturer	--	--
4.	Manufacturer's Paint ID No.	W4533D	DXH82445
5.	Lot No.	Not available	Not available
6.	Color	Beige	Gold
7.	Recommended Cure Schedule	10 min @ 177°C (350°F)	30 min @ 121°C (250°F)
8.	Viscosity (uncut paint)	28.0 sec (1)	27.2 sec (2)
9.	Reducing Solvent	Solvesso® 100	DxD reduce (3)
10.	% Reduction to Spray	2700 cc/15.1L	1400 cc/11.4L
11.	Viscosity - Spray	14.5 sec (1)	18.0 sec (2)
12.	wt/gal - Spray	64.8% (4)	52.0% (5)
13.	wt Solids - Spray	64.8% (4)	52.0% (5)
14.	Resistance or Conductance	2.3 MΩ	2.2 MΩ

(1) #3 Zahn cup @ 23°C (74°F).

(2) #4 Ford cup @ 23°C (74°F).

(3) D x D reducer composition: 50% acetone, 30% Cellosolve® acetate, 12% toluene, 8% Solvesso® 150.

(4) Mean value for 19 weight dish samples.

(5) Mean value for 10 wt dish samples.

containing the cut 65-percent coating. Another nine dishes were processed from this grab sample and the following bake schedule was used:

- 3 dishes for 10 minutes at 177°C (350°F)
- 3 dishes for 20 minutes at 177°C (350°F)
- 3 dishes for 30 minutes at 177°C (350°F)

Nineteen (5 x 2 + 3 x 3) sample dishes were thus obtained for the 65-percent solids coating.

MASS FLOW COMPARISON TEST

On Monday, September 27, 1982, the scheduled laboratory tests began with a comparison of two paint mass flow measurement techniques:

- Method A - Pressurized paint pot weight change (atomizing air on)
- Method B - Capture and weighing of unatomized paint flow

Method A would determine actual atomized paint flow during TE test runs; Method B would predetermine a paint mass flow rate for unatomized paint to be used in TE calculations. Method B, commonly used by industry, was suspected to be unrepresentative of paint flows during spray operations. The purpose of this test was to determine if there was a statistically significant difference between the two techniques. If a significant difference is detected, Method A will be selected as most representative for TE testing.

The following procedure was used to obtain the desired test data:

1. Select test equipment. Using Data Sheet D-1, document the test equipment specifications.
2. Select coating type to be used. Using Data Sheet D-2, document the manufacturer supplied paint characteristics.
3. Select spray equipment type and paint supply equipment to be used. Using Data Sheet D-3, document the equipment specifications.
4. Set up all equipment and adjust paint pot pressure and atomizing air pressure to desired settings. Record these settings on Data Sheet D-3.

5. Check stopwatch and platform scale to ensure that both have been zeroed (reset) and that the scale is in the tare mode.

6. Turn on paint spray equipment and initiate flow. Simultaneously, start stopwatch. After approximately 500 g have been sprayed, stop stopwatch and paint spray flow simultaneously. Record platform scale and stopwatch readings on Data Sheet D-4.

7. Repeat steps 5 and 6 until a total of eight samples have been recorded. Proceed to Step 8.

8. Turn off atomizing air pressure to spray gun.

9. Tare a paper cup on laboratory scale.

10. Check stopwatch to ensure that it has been zeroed.

11. Turn on paint spray equipment and initiate unatomized paint flow into paper cup. Simultaneously, start stopwatch. After cup is approximately 3/4 full, stop stopwatch and paint flow simultaneously.

12. Weigh filled (and previously tared) paper cup on laboratory scale. Record weight gain and stopwatch readings on Data Sheet D-4.

13. Repeat steps 9 through 12 until eight samples have been recorded.

14. Perform statistical analyses of test data using the following two techniques:

    - Wilcoxon test for two independent samples
    - "Prob-Value" using t-statistic

In performing the above tests the platform scale was initially calibrated and then checked for accuracy using a paper cup that had been preweighed at 5 g on the laboratory scale. The results indicated that the platform scale was capable of measuring 1,000 $\pm$ 5 g and 500 $\pm$ 5 g and was thus within the desired precision band.

After checking out the platform scale, the first test run was performed and aborted because the stopwatch was accidentally stopped at about 300 g without shutting off the spray gun. A total of five test runs had been performed when the entire test series was aborted. This termination of testing occurred because it was discovered that there was insufficient paint available of the same type already in the pot to complete the

tests. A switch was made to another spray booth and another paint and the Method A test series was begun again. At this time it was suggested that a calculation be made to determine the impact of displacement of the paint in the pot by pressurized air at 322 kPa (32 psig). The calculation indicated that 500 g of paint was displaced by about 1.4 g of air. In effect, therefore, about 501.4 g of paint was actually being sprayed. Since the accuracy and resolution of the platform scale was $\pm$ 5 g, the 1.4-g value was below this threshold limit and for all practical purposes was undetectable. Therefore, no adjustment was made in the spray flow rate measurements for Method A (paint pot weight change).

After completing eight measurements for Method A, a ninth measurement was made in the event any of the data was later rejected using an outlier analysis. For example, it was noted in the Log Book that data point A-8 may have been suspect due to the paint line possibly having an air bubble in it.

After completing the Method A test series, the testing proceeded to Method B for capturing the unatomized output. This test series went smoothly until data point B-8 was ready to be taken. At this time it was noted that although the spray gun had been shut off, a small stream of paint was leaking from the nozzle. The gun was taken apart, cleaned and reassembled for data point B-8. An additional test (B-9) was run in the event B-8 or any other data point in the Method B test series was later rejected on an outlier basis.

The analysis of the data, which led to the selection of Method A for all tests, is discussed on p. 61.

TEST PARAMETERS

Determination of Sample Size

The selection of the recommended sample size for each test series was based on the use of small sampling theory and the t-statistic. Small sampling theory uses the following terms and relationships:

$$U = X \pm t \times s/(n)^{0.5}$$

where U = True population mean value of transfer efficiency, %

X = Measured mean value of transfer efficiency for n samples, %

t = t-statistic representing area under the t-distribution probability curve with n-1 degrees of freedom for some specified confidence interval

s = Standard deviation for n observations

n = Number of TE sample values

The last term in the above relationship represents the error in estimating the true mean value of transfer efficiency (U) using the measured mean (X). To estimate the sample size it was assumed that the error term should be less than or equal to the standard deviation at the 95-percent level of confidence. The sample size can then be evaluated using the following relationship:

$$t/(n)^{0.5} \leq 1$$

or $n \geq t^2$

where t = t-statistic at 95 percent confidence level for n-1 degrees of freedom

The results of the sample size evaluation are as follows:

n	n - 1	t @ 95%	t^2
3	2	4.303	18.5
4	3	3.182	10.1
5	4	2.776	7.7
6	5	2.571	6.6
7	6	2.447	6.0
8	7	2.365	5.6

This evaluation shows that a minimum of seven observations should be selected to ensure that the measured mean TE values are within one standard deviation of the true population mean at the 95-percent level of confidence. For these laboratory tests a sample size of eight was selected for each test series.

Foil Handling Procedures

Of all the steps in the transfer efficiency test procedure, foil handling proved to be the most time consuming. Foil handling involves the following activities:

- Cutting foil to desired target length
- Labeling foil with appropriate test run nomenclature
- Preweighing foil and labeling foil with the beginning weight
- Mounting foil on flat panel or vertical cylinder targets

- Removing foil from flat panel or vertical cylinder targets

- Attaching foil to oven drying racks and inserting racks in oven

- Removing foils from oven and racks, weighing and labeling each foil with the ending weight

Of all these activities the foil mounting and removal from the targets proved to be the most difficult, particularly for the 3.2 cm (1-1/4 inch) diameter vertical cylinder targets. Figure 7 shows the attachment techniques for the two target configurations. For the flat panel targets the foil attachment and removal were relatively easy. Double-sided tape was attached to the flat panel targets to allow four sample foils to be placed on the targets.

In the case of the vertical cylinder targets, however, foil attachment and removal were difficult. First, a strip of masking tape was placed the entire length of one of the seams. Next a strip of double-sided tape was placed over the masking tape. The foil was then lined up as vertically plumb as possible and the front edge (refer to Figure 7) attached to the vertical cylinder using a small piece of masking tape at the top, middle, and bottom of the foil. Then the foil was tightly wrapped until the rear seam was barely touching the vertical cylinder. At this point a vertical mark was made to allow a piece of masking tape to be lined up correctly and then attached to the vertical cylinder. The rear seam with double-sided tape was then securely attached to the masking tape. The purpose of the masking tape was to minimize the potential for tearing the wet foil while removing it prior to oven rack attachment. Experimentation with the foil attachment had shown that the double-sided tape was too sticky to allow its direct placement on the foil surface.

QA/QC Procedures

As part of the overall Quality Assurance Program Plan, QA/QC procedures were developed and implemented for the laboratory TE tests. For example, to provide ease in data handling, the nomenclature shown in Table 7 was adopted and used extensively throughout the tests. To facilitate recording of data, three notebooks were kept during the tests:

- Log Book

- Master Data Book

- Weight Solids Data Book

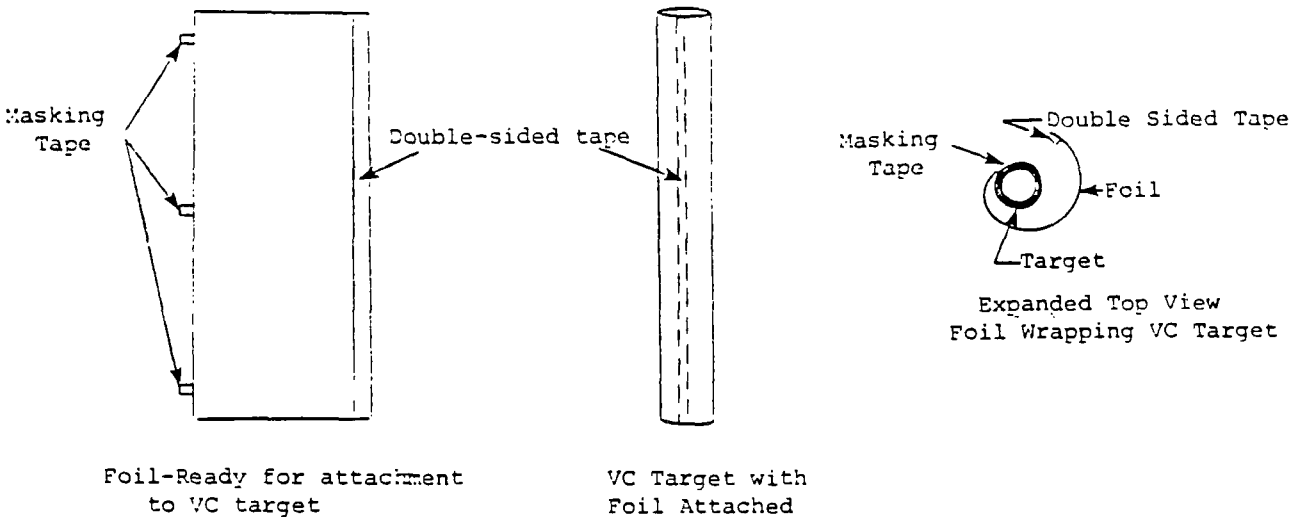

FLAT PANEL TARGET

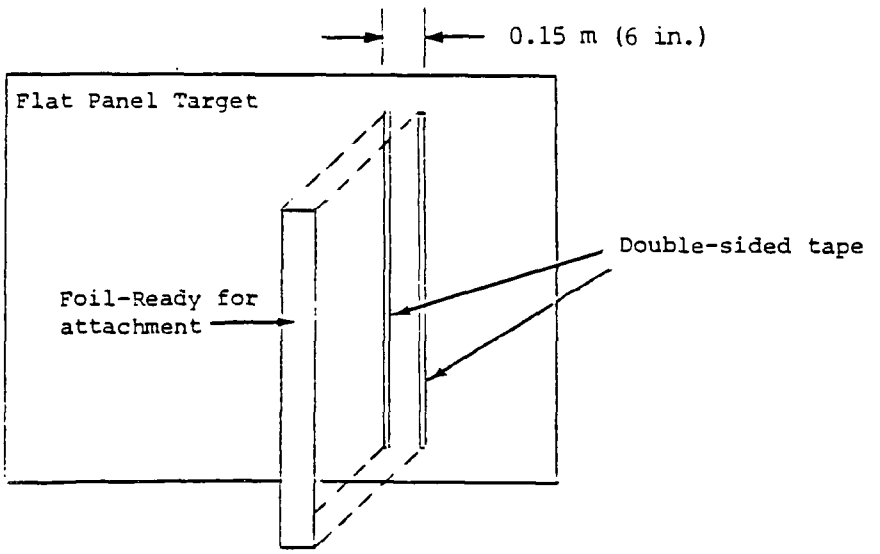

Figure 7. Foil Attachment Techniques for Vertical Cylinder and Flat Panel Targets, PPG Test, September 1982

TABLE 7. NOMENCLATURE FOR SPRAY PAINTING TRANSFER EFFICIENCY TESTS

Parameter	Nomenclature
I. Spray Equipment Type	
A. Air atomized conventional	AAC
B. Air atomized electrostatic	AAE
C. High speed bell	HSB
II. Coating Type (1)	
A. Automotive enamel	52
B. General purpose high solids	65
III. Target Configuration	
A. Flat panel	FP
B. Vertical cylinders	VC

Test No.

Example: AAC - 52 - FP - 1

Where AAC - 52 - FP = Test series number
and 1 = Observation number

(1) For clarity, the numerical weight percent solids is used to identify the coating.

The Log Book was used to keep track of miscellaneous data and to record any test anomalies. The Master Data Book contained the following information:

- All data sheets for all tests
- Up-to-date copy of the Test and Evaluation Plan, including Appendices A through E
- Summary of test matrix components
- Test sequence
- Test flow charts

The Master Data Book served as the primary reference document for all the TE tests. The Weight Percent Solids Data Book contained all the necessary data sheets and a copy of ASTM D-2369-81 (Standard Test Method for Volatile Content of Coatings). All of the weight percent solids analyses were recorded in this book.

To help ensure correctness, thoroughness, and completeness, all data sheets were independently reviewed, checked, and signed off.

As part of the overall QA/QC Plan, equipment with high rated accuracy was used wherever possible. Table 5 summarizes the major measured parameters and the associated equipment rated accuracy.

Test Sequence

Table 8 depicts the actual test sequence used for the transfer efficiency laboratory tests. As this table shows, the platform scale was initially set up on September 24, 1982. A quick check of the scale indicated that it was a 90-kg (200-lb) model as opposed to the desired 45-kg (100-lb) model. The scale rental supplier advised that the desired 45-kg load cells had been installed in the scale with the desired ± 5-g accuracy and readability (resolution). A paper cup was cut to size and weighed on the Mettler laboratory scale (accuracy of ± 0.01 g) to obtain a "calibration" weight. The scale was then loaded with 1,000- and 500-g weights and the paper cup was added to determine if the scale would read 1,005 and 505 g. This preliminary check-out was successful.

After checking out the scale, the vertical cylinder targets were assembled from the prefabricated pieces. The target assembly went smoothly and all preliminary test arrangements were completed in preparation for the following week's tests (9/27 - 9/30/82), described below.

TABLE 8. TRANSFER EFFICIENCY TEST SEQUENCE AT PPG SEPTEMBER 1982

DATE	ACTIVITY	TEST RUNS
Friday (9-24-82)	o Set up platform scale and made preliminary adjustments	
	o Set up vertical and flat panel targets and performed "dry run" check out	
Monday (9-27-82)	o Performed mass flow comparison test	
	o Began TE test runs	o AAE - 65 - VC - 1 to 4 o AAE - 65 - FP - 1 to 4 o AAE - 65 - VC - 5 to 8 o AAE - 65 - FP - 5 to 8
Tuesday (9-28-82)	o Continued TE test runs	o AAE - 52 - VC - 1 to 4 o AAE - 52 - FP - 1 to 4
	o Performed additional TE test run	o AAE - 52 - VC - 5 to 8 o AAE - 52 - FP - 5 to 8 o AAC - 52 - VC - 1 to 4 o AAC - 52 - FP - 1 to 4 o AAC - 52 - VC - 5 to 8 o AAC - 52 - FP - 5 to 8 o AAC - 65 - VC - 1 to 4 o AAC - 65 - FP - 1 to 4 o AAC - 65 - VC - 5 to 8 o AAC - 65 - FP - 5 to 8 o AAE - 65 - VC - 1A to 4A o AAE - 65 - ST - 1 to 3 (1)
Wednesday (9-29-82)	o Changed to HSB booth	o HSB - 65 - FP - 1 to 4 o HSB - 65 - FP - 5 to 8
	o Completed TE test runs	o HSB - 65 - VC - 1 to 4 o HSB - 65 - VC - 5 to 8
	o Booth cleanup	o HSB - 52 - FP - 1 to 4 o HSB - 52 - FP - 5 to 8 o HSB - 65 - VC - 1 to 4 o HSB - 65 - VC - 5 to 8
Thursday (9-30-82)	o Rechecked target foils	
	o Performed additional weight solids tests	

(1) ST = semi-tubular target configuration

PHASE I TEST RESULTS

General

Transfer efficiency measurements were made for a total of 12 test series. These series encompassed a test matrix of three types of spray equipment, two coatings, and two target configurations. For each test series, eight foils were coated to determine transfer efficiency. The eight observations per test series were obtained by coating two separate groups of four foils per target assembly (refer to Figures 3 and 4). For comparative purposes, however, Table 9 summarizes the results of the tests based on evaluating the data under the following two scenarios:

- Each test series is composed of eight observations from two groups of four foils each
- Each test series is composed of two observations; each observation is the average of a group of four foils

These two different scenarios for evaluating the data are shown because of the question of whether or not a group of four foils should be treated as four separate observations or as one observation averaged from four foils. Treating the test data for each test series as two observations composed of the averages of four foils each is a conservative approach. Realistically, the data obtained in the tests are equivalent to a sample size somewhere between two and eight. The more conservative approach (data treated as two observations of four foils each) is the preferred technique for estimating the overall precision of the test method.

In both scenarios, the measured mean TE values are equal; however, as expected, the standard deviations and hence coefficients of variation are different. For example, the measured mean TE values ranged from a low of 10.2 percent for the air atomized conventional gun spraying 65-percent solids paint at a vertical cylinder target, to a high of 93.9 percent for a high speed rotating bell delivering 65-percent solids paint to a vertical cylinder target.

For the standard deviations, however, the two different data handling scenarios produced noticeably different results. In the first case (data treated as eight individual observations), the standard deviations ranged from 0.6 to 5.2 percent. The standard deviations in the second case (data treated as two observations of four foils each), however, ranged from 0.04 to 6.1 percent. Similarly, the coefficients of variation, which are a measure of the relative precision among test series, ranged from 1.2 to 5.3 percent for the first case and 0.1 to 6.1 percent for the second case.

TABLE 9. SUMMARY OF TRANSFER EFFICIENCY TEST RESULTS

		CASE 1: Data treated as 8 individual observations		CASE 2: Data treated as 2 observations of 4 foils each	
Test Series	TE_M, %	S	COV, %	S	COV, %
AAE-52-VC	30.8	1.7	5.5	1.7	5.5
52-FP	81.2	1.3	1.6	0.2	0.4
65-VC	25.7	1.6	6.2	0.4	1.6
65-FP	81.5	1.9	2.3	1.7	2.1
AAC-52-VC	10.8	0.7	6.5	0.1	0.9
52-FP	61.7	1.2	1.9	0.5	0.8
65-VC	10.2	0.6	5.9	0.04	0.4
65-FP	60.8	1.6	2.6	0.04	0.1
HSB-52-VC	91.3	2.8	3.1	2.4	2.6
52-FP	91.3	1.9	2.1	0.5	0.5
65-VC	98.1	5.2	5.3	6.1	6.1
65-FP	92.8	1.1	1.2	0.6	0.7

NOTES:

TE_M = measured mean transfer efficiency, %

S = sample standard deviation

COV = coefficient of variation $(S/TE_M) \times 100$, %

Having calculated the standard deviations for each test series, the analyses proceeded to an evaluation of the poolability of the variances to determine if a statement could be made concerning the overall precision of the test method. Bartlett's Test was used to examine the homogeneity of the variances of the test series (i.e., are the variances of the test series equal?).

From the Bartlett's Test it was found that the variances of all 12 test series could not be considered equal for either of the cases in Table 9. The analyses then proceeded to an examination of the following various groups of data:

- Compare poolability of variances for TE's obtained from the same spray equipment type (4 TE's = 2 targets x 2 coatings); 3 gun groups to be evaluated.
- Compare poolability of variances for TE's obtained for the same target configuration (6 TE's = 3 spray equipment x 2 coatings); 2 target groups to be evaluated.
- Compare poolability of variances for TE's obtained for the same coating (6 TE's = 3 spray equipment x 2 targets); 2 coatings groups to be evaluated.
- Several combinations of the first group.

These analyses were performed for only the second case, i.e., treating the data for each test series as two observations of four foils each. The results of these analyses are shown in Table 10. The pooled standard deviations ranged from 0.3 to 3.3; however, the pooled standard deviation for the maximum sample size of 16 observations was 2.5. This value is the preferred value for use in estimating the required sample size for future laboratory tests.

An examination of the results in Table 10 shows that the data were not poolable, primarily due to the very large standard deviation (6.1) for one test series (high speed bell, 65-percent-solids, vertical cylinder) coupled with the very low variance exhibited by the AAC configuration. As discussed later, in this particular test series (HSB-65-VC), one sample resulted in a mean TE of 102.4 percent and the other a mean of 93.9 percent, with a resultant average value of 98.1 percent. Since transfer efficiencies greater than 100 percent are impossible, the mean TE of 102.4 percent is clearly in error. However, the data exceeding 100 percent could not be rejected on an outlier basis. Sufficient data points were not available to perform an outlier evaluation to permit removal of the data from the statistical analysis.

TABLE 10. RESULTS OF BARTLETT'S TEST FOR EVALUATION OF POOLABILITY OF VARIANCES AT 95% LEVEL OF CONFIDENCE

Test Series Evaluated	No. of Test Series	No. of Observations (1)	Pooled Standard Deviation
I. All test series	12	24	Not poolable
II. Groups of test series			
A. Same spray equipment type			
1. Air atomized electrostatic	4	8	1.2
2. Air atomized conventional	4	8	0.3
3. High speed bell	4	8	3.3
B. Same target configuration			
1. Vertical cylinders	6	12	Not poolable
2. Flat panels	6	12	0.8
C. Same coating			
1. 52% wt solids	6	12	1.2
2. 65% wt solids	6	12	Not poolable
III. Combinations of groups			
A. Group A1 & A2	8	16	Not poolable
B. Group A1 & A3	8	16	2.5
C. Group A2 & A3	8	16	Not poolable

(1) Data treated as two observations of four foils each.

Coating and Equipment Specifications and Equipment Operating Conditions

Tables 3, 11, and 12 show the specifications of the equipment and the equipment operating conditions used in these tests. Table 6 shows the coating specifications.

Table 3 shows the specifications of the three types of paint spray equipment used in this test program. In addition, the table provides information on the peripheral equipment used in the tests.

TRANSFER EFFICIENCY TEST RESULTS

Air Atomized Electrostatic Spray Equipment Test Results

Table 13 summarizes the results of all the tests for the air atomized electrostatic paint spray equipment. Transfer efficiencies ranged from 23.5 to 33.7 percent for the foils on the vertical cylinders to 78.5 to 84.4 percent for the foils on the flat panel targets. The resulting standard deviations were low and ranged from 0.2 to 1.7, indicative of very good precision.

In addition to these results, one supplementary test was performed in which four additional vertical cylinder foils and three semi-tubular target foils were coated using the high solids coating. The supplementary test was performed because the first sample, AAE-HS-VC-1 to 4, in particular, had not used the foil attachment technique shown in Figure 7. As a result, wet paint was deposited on masking tape used to hold the rear seam down. This tape was then removed, subsequently affecting the dry solids weight for the cured foil. Figure 8 shows the difference between the vertical cylinder and semitubular target configurations.

If this additional observation is included in the AAE-65-VC test series, the new calculated results are as follows:

- TE_M = 27.9%
- S = 3.9
- COV = 14.0%

These results are based on the four foils in the third observation having individual TE's of 33.9, 31.5, 32.1, and 32.1 percent. The new standard deviation and COV are significantly higher than the results of the other test series for the air atomized electrostatic spray gun. The bias introduced by the tape removal problem (discussed above) clearly contributed to

TABLE 11. SUMMARY OF EQUIPMENT OPERATING CONDITIONS FOR AIR ATOMIZED ELECTROSTATIC AND CONVENTIONAL SPRAY GUNS

	Air Atomized Electrostatic		Air Atomized Conventional	
	Low Solids	High Solids	Low Solids	High Solids
A. Paint Spray Equipment (1)				
1. Paint Pressure at Paint Pot, kPa (psig)	294 (28)	252 (22)	294 (28)	225 (18)
2. Paint Pressure at Spray Gun, kPa (psig)	Not measured	Not measured	Not measured	Not measured
3. Atomizing Air Pressure at Spray Gun, kPa (psig)	446 (50)	446 (50)	446-453 (50-51)	453 (51)
4. Operating Voltage, kV	45 (2)	45 (2)	Not applicable	Not applicable
5. Paint Temperature at Paint Pot, °C (°F)	23 (74)	23 (74)	23 (74)	23 (74)
6. Gun to Target Distance, in (cm)	12 (30); 13 (33) (3)	12 (30); 13 (33)	12 (30); 13 (33)	12 (30); 13 (33)
B. Paint Spray Booth				
1. Ambient Temperature, °C (°F)	23 (74)	24 (75)	23 (73)	23 (73)
2. Relative Humidity, %	52	49	54	54
3. Air Flow Velocity, m/s (fpm)	0.762-1.02 (150-200)	0.762-1.143 (150-225)	0.762-1.02 (150-200)	0.762-1.02 (150-200)
4. Air Flow Direction	Normal to target	Normal to target	Normal to target	Normal to target
C. Target Parameters				
1. Average Wet Film Thickness, 10^{-6} meters (mils)	1.27-2.54 (1/2 to 1)	3.81 (1 1/2)	3.81 (1 1/2)	5.08-6.35 (2 to 2 1/2
2. Vertical Paint Coverage, cm (in)	Not measured	Not measured	Not measured	Not measured
3. Target Height, cm (in)	86-89 (34-35)	86-89 (34-35)	86-89 (34-35)	86-89 (34-35)
4. % Vertical Coverage	75 (est)	75 (est)	75 (est)	75 (est)
5. Resistance to Ground, Ohm	< 1 million	< 1 million	< 1 million	< 1 million
D. Forced Draft Oven				
1. Cure Time, sec (min)				
a. Foil Dish (sample)	1800 (30)	600, 1200, 1800 (4) (10, 20, 30)	1800 (30)	600, 1200, 1800 (4) (10, 20, 30)
b. Target Foil	1800 (30)	600 (10)	1800 (30)	10
2. Cure Temperature, °C (°F)				
a. Foil Dish (sample)	121 (250)	177 (350)	121 (250)	177 (350)
b. Target Foil	121 (250)	177 (350)	121 (250)	177 (350)
E. Conveyor Speed Setpoint, m/s (fpm)	0.15 (30)	0.15 (30)	0.15 (30)	0.15 (30)

(1) Paint heaters not used in these tests.
(2) Measured at gun tip with paint in lines.
(3) 12 inches for vertical cylinder target; 13 inches for flat panel target.
(4) Some sample dishes were baked for 20 and 30 minutes (refer to discussion in this report).

TABLE 12. SUMMARY OF EQUIPMENT OPERATING CONDITIONS FOR HIGH SPEED BELL

	Vertical Cylinders		Flat Panel	
	Low Solids	High Solids	Low Solids	High Solids
A. Paint Spray Equipment (1)				
1. Turbine Air Pressure, KPa (psig)	308 (30)	308 (30)	308 (30)	308 (30)
2. Operating Voltage, kV	80 (2)	80	80	80
3. Disk or Bell Speed, rps (rpm)				
a. With Paint Applied	Not measured	Not measured	Not measured	Not measured
b. Without Paint Applied	333 (20,000)	333 (20,000)	333 (20,000)	333 (20,000)
4. Shaping Air for Bell, kPa (psig)	308 (30)	308 (30)	308 (30)	308 (30)
5. Paint Temperature at Paint Pot, °C (°F)	21 (70)	21 (70)	21 (70)	21 (70)
6. Gun to Target Distance, cm (in)	30 (12)	30 (12)	30 (12)	30 (12)
B. Paint Spray Booth				
1. Ambient Temperature, °C (°F)	24 (75)	21 (70)	21 (70)	21 (70)
2. Relative Humidity, %	50	56	56	56
3. Air Flow Velocity, m/s (fpm)	0.635-0.889 (125-175)	0.508-0.762 (100-150)	0.508-0.762 (100-150)	0.508-0.762 (100-150)
4. Air Flow Direction	Normal to target	Normal to target	Normal to target	Normal to target
C. Target Parameters				
1. Average Wet Film Thickness, 10^{-6} meter (mils)	3.81 (1 1/2)	3.81-5.08 (1 1/2 - 2)	3.81-5.08 (1 1/2 - 2)	3.81 (1 1/2)
2. Vertical Paint Coverage, cm (in)	Not measured	Not measured	Not measured	Not measured
3. Target Height, cm (in)	142 (56)	142 (56)	142 (56)	142 (56)
4. % Vertical Coverage	90 (est)	90 (est)	90 (est)	90 (est)
5. Resistance to Ground, Ohm	< 1 million	< 1 million	< 1 million	< 1 million
D. Forced Draft Oven				
1. Cure Time, s (min)				
a. Foil Dish (sample)	1800 (30)	600, 1200, 1800 (3) (10, 20, 30)	1800 (30)	600, 1200, 1800 (3) (10, 20, 30)
b. Target Foil	1800 (30)	600 (10)	1800 (30)	600 (10)
2. Cure Temperature, °C (°F)				
a. Foil Dish (sample)	121(250)	177(350)	121(250)	177(350)
b. Target Foil	121(250)	177(350)	121(250)	177(350)
E. Conveyor Speed Setpoint, m/s (fpm)	9.1(30)	9.1(30)	9.1(30)	9.1(30)

(1) Paint heaters not used in these tests.
(2) Measured at bell high voltage take-off connection with paint in lines.
(3) Some sample dishes were baked for 20 and 30 minutes (refer to discussion in this report).

TABLE 13. SUMMARY OF TE TEST RESULTS FOR AIR ATOMIZED ELECTROSTATIC SPRAY EQUIPMENT

		Transfer Efficiencies, % (1)												
		Foil No.					Foil No.							
Coating Wt Solids	Target Configuration	1	2	3	4	TE_1(2)	5	6	7	8	TE_2(3)	TE_M(4)	Std Deviation, (5)	Coefficient of Variation, % (6)
52	Vertical Cylinder	31.0	28.8	29.2	29.6	29.7	33.7	32.2	30.3	31.8	32.0	30.8	1.66	5.5
52	Flat Panel	82.5	82.5	81.4	79.2	81.4	80.5	80.5	80.5	82.8	81.1	81.2	0.23	0.2
65	Vertical Cylinder	26.9	24.2	25.8	26.9	26.0	27.4	24.0	23.5	26.8	25.4	25.7	0.37	1.6
65	Flat Panel	81.2	80.6	80.6	78.5	80.2	80.4	84.4	82.7	83.2	82.7	81.5	1.73	2.1

(1) Values are shown rounded to nearest 0.1%; statistical analyses were performed with values rounded to nearest 0.01%.

(2) TE_1 is Observation No. 1 and represents the arithmetic average of foil Nos. 1, 2, 3 and 4.

(3) TE_2 is Observation No. 2 and represents the arithmetic average of foil Nos. 5, 6, 7 and 8.

(4) TE_M is the measured mean TE for each test series and represents the arithmetic average of Observation No. 1 (TE_1) and Observation No. 2 (TE_2).

(5) For these tests which assume two observations, see test series; the sample standard deviation is as follows: $S = [(TE_1 - TE_M)^2 + (TE_2 - TE_M)^2]^{0.5}$.

(6) The coefficient of variation (COV) is determined as follows: $COV = S/TE_M$; standard deviations were rounded to nearest 0.1 before computing the COV.

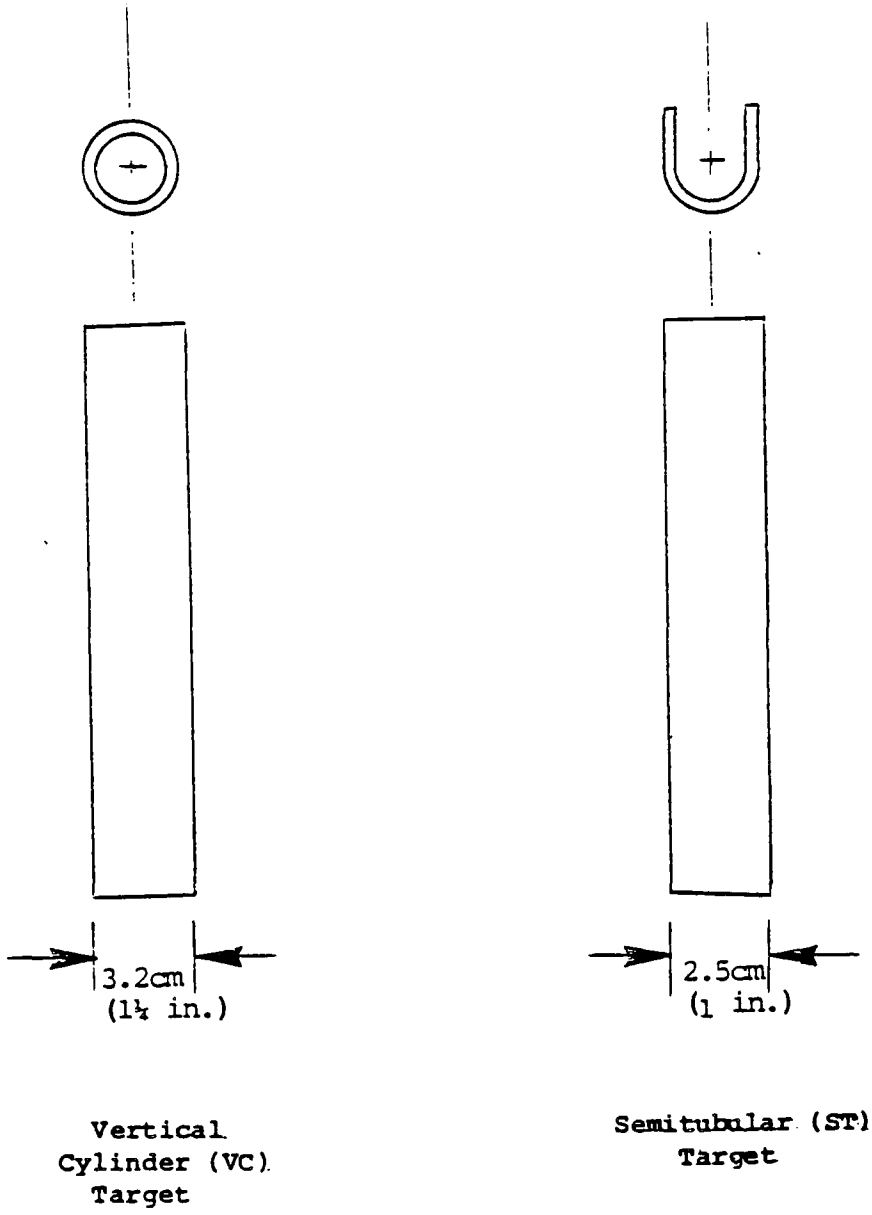

Figure 8. Comparison of Vertical Cylinder and Semitubular Target Configurations

the calculation for the mean transfer efficiency and the relatively large standard deviation for this test series.

As expected, due to the increased exposed surface area, the semitubular target had a higher transfer efficiency than the vertical cylinder target. The three foils for the semitubular target had individual TE's of 34.5, 35.7, and 40.5, for an average of 36.9 percent.

The coefficients of variation for the test series in Table 13 ranged from 0.2 to 5.5 percent, indicative of good relative precision. The COV for the AAE-65-VC test series using three observations instead of two was a poor 14 percent.

Air Atomized Conventional Spray Equipment Test Results

Table 14 summarizes the results of all the test series for the air atomized conventional paint spray equipment. Transfer efficiencies ranged from 9.7 to 11.9 percent for the foils on the vertical cylinders to 58.6 to 63.4 percent for the foils on the flat panel targets. The resulting standard deviations were very low and ranged from 0.04 to 0.5, indicative of excellent precision for these test series. Similarly, the relative precision expressed by the COV's was excellent and fell in the range of 0.1 to 0.9 percent.

High Speed Bell Spray Equipment Test Results

Table 15 summarizes the results of all the test series for the high speed bell coating equipment. Transfer efficiencies ranged from 86.7 to 106.3 percent for the foils on the vertical cylinders to 89.3 to 94.4 percent for the foils on the flat panel targets. The resulting standard deviations were relatively low and ranged from 0.5 to 6.1, indicative of good precision for these test series. Similarly, the COV's were relatively low and ranged from 0.5 to 6.2 percent.

Note that the transfer efficiency in one of the vertical cylinder/65-percent solids test series was over 100 percent. Transfer efficiencies over 100 percent are clearly erroneous and most likely are the result of bias in one or more of the following measurements:[1]

- Incorrect end weight for platform scale (mass flow rate calculation)
- Incorrect stopwatch reading (mass flow rate calculation)
- Incorrect conveyor time reading (conveyor speed measurement calculation)

[1]Refer to Section 6 for further explanation.

TABLE 14. SUMMARY OF TE TEST RESULTS FOR AIR ATOMIZED CONVENTIONAL SPRAY EQUIPMENT

		Transfer Efficiencies, % (1)												
		Foil No.					Foil No.							
Coating Wt Solids	Target Configuration	1	2	3	4	TE_1(2)	5	6	7	8	TE_2(3)	TE_M(4)	Std Deviation, (5)	Coefficient of Variation, % (6)
52	Vertical Cylinder	11.9	10.9	10.4	10.2	10.9	10.5	11.7	10.5	10.0	10.7	10.8	0.12	0.9
52	Flat Panel	61.9	62.4	60.4	60.9	61.4	63.4	63.2	60.9	60.7	62.1	61.7	0.46	0.8
65	Vertical Cylinder	9.8	9.8	10.8	10.3	10.2	11.3	10.2	9.7	9.7	10.2	10.2	0.04	0.1
65	Flat Panel	61.3	61.9	58.6	61.3	60.8	58.6	61.3	60.8	62.4	60.8	60.8	0.04	0.1

(1) Values are shown rounded to nearest 0.1%; statistical analyses were performed with values rounded to nearest 0.01%.

(2) TE_1 is Observation No. 1 and represents the arithmetic average of foil Nos. 1, 2, 3 and 4.

(3) TE_2 is Observation No. 2 and represents the arithmetic average of foil Nos. 5, 6, 7 and 8.

(4) TE_M is the measured mean TE for each test series and represents the arithmetic average of Observation No. 1 (TE_1) and Observation No. 2 (TE_2).

(5) For these tests which assume two observations, see test series; the sample standard deviation is as follows: $S = [(TE_1 - TE_M)^2 + (TE_2 - TE_M)^2]^{0.5}$

(6) The coefficient of variation (COV) is determined as follows: $COV = S/TE_M$; standard deviations were rounded to nearest 0.1 before computing the COV.

TABLE 15. SUMMARY OF TE TEST RESULTS FOR HIGH SPEED BELL COATING EQUIPMENT

		Transfer Efficiencies, % (1)												
		Foil No.					Foil No.							
Coating Wt Solids	Target Configuration	1	2	3	4	TE_1(2)	5	6	7	8	TE_2(3)	TE_M(4)	Std Deviation, (5)	Coefficient of Variation, % (6)
52	Vertical Cylinder	93.9	91.4	92.8	93.9	93.0	90.2	86.7	87.8	93.5	89.6	91.3	2.44	2.6
52	Flat Panel	94.0	89.3	89.3	91.2	91.0	94.2	90.6	91.7	90.3	91.7	91.3	0.53	0.5
65	Vertical Cylinder	100.0	100.9	102.5	106.3	102.4	92.8	92.8	91.9	97.9	93.9	98.1	6.07	6.2
65	Flat Panel	93.1	92.2	93.1	94.4	93.2	93.6	92.4	90.5	92.7	92.3	92.8	0.64	0.6

(1) Values are shown rounded to nearest 0.1%; statistical analyses were performed with values rounded to nearest 0.01%.

(2) TE_1 is Observation No. 1 and represents the arithmetic average of foil Nos. 1, 2, 3 and 4.

(3) TE_2 is Observation No. 2 and represents the arithmetic average of foil Nos. 5, 6, 7 and 8.

(4) TE_M is the measured mean TE for each test series and represents the arithmetic average of Observation No. 1 (TE_1) and Observation No. 2 (TE_2).

(5) For these tests which assume two observations, see test series; the sample standard deviation is as follows: $S = [(TE_1 - TE_M)^2 + (TE_2 - TE_M)^2]^{0.5}$

(6) The coefficient of variation (COV) is determined as follows: $COV = S/TE_M$; standard deviations were rounded to nearest 0.1 before computing the COV.

- Incorrect foil weight before spraying (net solids deposited calculation)

WEIGHT PERCENT SOLIDS TEST RESULTS

Table 16 summarizes the results of the weight percent solids tests performed as part of the transfer efficiency measurements. The high solids coating used in these tests had an average weight solids content of 64.8 percent and a standard deviation of 2.4 percent for 19 samples. The low solids coating had an average weight solids content of 52.0 percent and a standard deviation of 1.9 for 10 samples. These average values were used in the calculations for transfer efficiency.

MASS FLOW COMPARISON TEST RESULTS

Tables 17, 18, and 19 summarize the specifications for the test equipment, paint, and paint spray and peripheral equipment used in the mass flow comparison test. Table 20 summarizes the results of the nine test runs performed for Method A (platform scale weight change) and Method B (capture unatomized output). Using this information, statistical analyses were performed to determine if both mass flow measurement techniques yielded results that could be considered essentially equal. Two independent statistical techniques showed that the two mass flow measurement techniques yielded significantly different results.

The first method applied to evaluate the test data was the Wilcoxon test for two independent samples. In applying this method, it was decided not to adjust the flow rate in Method A to account for the air weight change in the pressure pot. This adjustment is not recommended since the air weight change is approximately 1.4 g per 500 g paint sprayed and represents only 28 percent of the 5-g accuracy and resolution of the platform scales.

The second method applied to evaluate the test data was the t-statistic. The same data were used as for the Wilcoxon evaluation. The results show that the measured mean flows, 2.902×10^{-3} and 3.021×10^{-3} kg/s, are significantly different with a significance level of 0.0005, i.e., 0.05 percent.

As a result of this comparison, Method A was selected as the most representative mass flow determination method. Method A is used in the Draft Transfer Efficiency Test Procedure.

TABLE 16. SUMMARY OF WEIGHT SOLIDS TEST RESULTS

Sample No.	High Solids Coating (1) Cure Time, s (min)	High Solids Coating (1) Weight Solids, %	Low Solids Coating (2) Cure Time, s (min)	Low Solids Coating (2) Weight Solids, %
1	1200 (20)	64.9	1800 (30)	51.9
2	1200 (20)	64.7	1800 (30)	54.2
3	600 (10)	67.3	1800 (30)	48.2
4	600 (10)	69.2	1800 (30)	50.0
5	600 (10)	65.1	1800 (30)	53.7
6	600 (10)	62.1	1800 (30)	52.0
7	600 (10)	65.6	1800 (30)	53.7
8	600 (10)	66.7	1800 (30)	53.7
9	600 (10)	61.4	1800 (30)	51.1
10	600 (10)	62.3	1800 (30)	51.9
11	600 (10)	66.7		
12	600 (10)	66.7		
13	600 (10)	64.0		
14	1200 (20)	66.7		
15	1200 (20)	66.7		
16	1200 (20)	64.4		
17	1800 (30)	64.2		
18	1800 (30)	59.3		
19	1800 (30)	64.1		
	Ave. =	64.8%	Ave. =	52.0%
	S =	2.4	S =	1.9

(1) Cure temperature = 177°C (350°F); all samples.
(2) Cure temperature = 121°C (250°F); all samples.

TABLE 17. TEST EQUIPMENT SPECIFICATIONS FOR MASS FLOW COMPARISON TESTS

A. Laboratory Scale	
1. Manufacturer	Mettler
2. Model No.	P1200N
3. Serial No.	558312
4. Capacity, g	1,200
5. Rated Accuracy, g	± 0.01
B. Platform Scale	
1. Manufacturer	NCI, Inc.
2. Model No.	5780
3. Serial No.	C790482
4. Capacity, g	90 (1)
5. Rated Accuracy, g	± 5.
C. Capture Container	
1. Type	Paper Cup
2. Approximate dry weight, g	7
D. Stop Watch	
1. Manufacturer	Markson Science, Inc.
2. Model No.	Digital LCD
3. Serial No.	26119
4. Capacity, g	Not available
5. Rated Accuracy, g	± 0.001% of reading

(1) Fitted with 45-kg load cells.

TABLE 18. PAINT SPECIFICATION FOR MASS FLOW COMPARISON TESTS

1.	Paint Type	Enamel
2.	Resin Type	Polyester
3.	Manufacturer	PPG
4.	Manufacturer'r Paint ID No.	AG452D1331-A
5.	Lot No.	Not Available
6.	Color	White
7.	Recommended Cure Schedule	Not Required
8.	Viscosity	Not Required
9.	Reducing Solvent	Xylene
10.	% Reduction to Spray	Unknown
11.	Viscosity - Spray	19 sec wi/#3 Zahn cup @ 23°C (74°F)
12.	Wt/Gallon - Spray	1.33 kg/L (11.1 lb/gal)
13.	Wt Solids - Spray	Unknown
14.	Resistance or Conductance	Unknown

TABLE 19. EQUIPMENT SPECIFICATIONS AND OPERATING CONDITIONS FOR MASS FLOW COMPARISON TEST

A. Paint Supply Tank	
1. Type	Pressurized Pot
2. Manufacturer	Binks
3. Model No.	83-5501
4. Serial No.	Not Available
5. Rated Capacity, gal	2
B. Paint Spray Equipment	
1. Type	AAE
2. Manufacturer	Nordson
3. Model No.	AN-8
4. Serial No.	Not Available
5. Rated Capacity, cc/min	Not Available
6. Air Cap	987
7. Fluid Tip	228
8. Needle	Not Available
C. Equipment Operating Parameters	
1. Atomizing Air Pressure at Spray Gun, psig	9.38 kPa (50 psig)
2. Paint Pressure at Paint Pot	6.77 kPa (32 psig)
3. Initial Pot Loading	3.8L (1 gal)

TABLE 20. MASS FLOW COMPARISON TEST RESULTS

Method A: (Platform scale; atomized output)

Test Run No.	Beginning Wt, kg	Ending Wt, kg	Elapsed Time, s	Flow Rate, 10^{-3} kg/s (1) (g/min)
A-1	0	0.505	174.23	2.898 (173.91)
A-2	0	0.505	173.81	2.905 (174.33)
A-3	0	0.505	172.01	2.936 (176.15)
A-4	0	0.500	172.06	2.906 (174.36)
A-5	0	0.505	174.59	2.892 (173.55)
A-6	0	0.505	173.23	2.915 (174.91)
A-7	0	0.505	174.80	2.889 (173.34)
A-8	0	0.500	169.40	2.952 (177.10)
A-9	0	0.500	171.99	2.907 (174.43)
			Mean Flow =	2.902 (174.68) (2)

Method B: (Laboratory scale; unatomized output)

Test Run No.	Beginning Wt, kg	Ending Wt, kg	Elapsed Time, s	Flow Rate, 10^{-3} kg/s (1) (g/min)
B-1	0	134.17	44.33	3.027 (181.60)
B-2	0	135.44	44.99	3.010 (180.63)
B-3	0	133.87	44.97	2.977 (178.61)
B-4	0	134.71	45.08	2.988 (179.29)
B-5	0	135.49	45.14	3.002 (180.09)
B-6	0	131.30	43.81	2.997 (179.82)
B-7	0	131.03	44.09	2.972 (178.31)
B-8	0	140.82	45.11	3.122 (187.30)
B-9	0	137.85	44.51	3.097 (185.82)
			Mean Flow =	3.021 (181.27) (2)

(1) Method A results not corrected for pressurized paint pot air weight change.
(2) Arithmetic mean values for nine observations.

SECTION 6

PHASE II LABORATORY TEST

FACILITIES

The Phase II Laboratory test runs were done using the original test plan. They were run in an open booth approximately 4.6 x 7.6 meters (15 feet by 25 feet) with the exhaust fan along the back wall normal to the targets. Paint spray and peripheral equipment specifications used for this test are shown in Table 21. Every effort was made to duplicate the equipment specifications used in the original test. The equipment rated accuracy matched or exceeded the requirements of the Test Plan (Table 5).

For the voltage measurements, Ransburg supplied a Singer Kilovolt Meter, which does not draw current while sensing the voltage.

DESCRIPTION OF PAINTS

PPG supplied two paints from the same batch as the first test. These paints were recut to test specifications at PPG before shipment. Table 22 documents the paint properties measured at Ransburg prior to the test. In the Phase I test, the paint viscosities were 18 seconds (Ford ¢4 cup) and 14.5 seconds (Zahn ¢3 cup) for the 51-percent and 67-percent solids paints, respectively. PPG reports identical results for the paint they supplied for Phase II. Values of 22 and 20.5 seconds were measured for the corresponding paints at Ransburg. Since agreement with specifications was documented by PPG before shipment, the difference is attributed to small variations from cup to cup and in measurement technique.

A Ransburg Model 234 meter was used to measure the resistance of the paint. The resistance was 1.5 megohms for the 51 percent solids paint, and 2.5 megohms for the 67 percent solids paint. These resistances also differ from the original test observations.

Paint weight percent solids determinations were made according to the Test Plan and ASTM D-2369-81 (see Section 4). The paint manufacturers' recommended cure schedules were used for the weight percent solids determination and for curing

TABLE 21. SUMMARY OF REPORTED PAINT SPRAY AND PERIPHERAL EQUIPMENT SPECIFICATIONS FOR RANSBURG TEST (1)

	Air Atomized Electrostatic	Air Atomized Conventional	High Speed Bell
A. Paint Supply Tank			
1. Type	Pressure Pot	Pressure Pot	Positive displacement pump
2. Manufacturer	Binks	Binks	Ransburg
3. Model No.	83-5508	83-5508	9966-9
4. Serial No.	Not available	Not available	062702
5. Rated Capacity, gallons	2	2	2
B. Paint Spray Equipment			
1. Type	Air atom elec	Air atom conv	High speed bell
2. Manufacturer	Nordson	Binks	Ransburg
3. Model No.	AN-8	21 (2)	Turbobell
4. Serial No.	Not available	36113	Not available
5. Rated Capacity, cc/min	Not available	Not available	Not available
6. Air Cap	987	63 PB	Not applicable
7. Fluid Tip	228	63 C	Not applicable
8. Needle	Not available	Not available	Not applicable
9. Power supply	EPU-8; 76 kV rated; 150 u amp rated	Not applicable	Not available
C. Paint Spray Booth			
1. Type	Open	Open	Open
2. Manufacturer	Not available	Not available	Not available
3. Model No.	Not available	Not available	Not available
4. Serial No.	Not available	Not available	Not available
5. Rated Capacity, cfm	Not available	Not available	Not available
D. Conveyor			
1. Type	Overhead	Overhead	Overhead
2. Manufacturer	Richards-Wilcox	Richards-Wilcox	Richards-Wilcox
3. Model No.	Not available	Not available	Not available
4. Serial No.	Not available	Not available	Not available
E. Forced Draft Oven			
1. Type	Electric	Electric	Electric
2. Manufacturer	Young Brothers	Young Brothers	Young Brothers
3. Model No.	Not available	Not available	Not available
4. Serial No.	Not available	Not available	Not available

(1) No paint heaters were required for these tests

(2) Model 21 equivalent to Model 610 except made of different materials. All interior dimensions identical.

TABLE 22. SUMMARY OF PAINT PROPERTIES

		Paint 1	Paint 2
1.	Paint Type	Enamel	Enamel
2.	Resin Type	Polyester	Acrylic
3.	Manufacturer	PPG	PPG
4.	Manufacturer's Paint ID No.	W4533D	DXH82445
5.	Lot No.	Not available	Not available
6.	Color	Beige	Gold
7.	Recommended Cure Schedule	600 s @ 177°C (10 min @ 350°F)	1800 s @ 121°C (30 min @ 250°F)
8.	Viscosity (uncut)	Not available	Not available
9.	Reducing Solvent	Solvesso® 100	DxD reduce (1)
10.	% Reduction to Spray	Not available	Not available
11.	Viscosity - Spray	20.5 s (2)	24 s (3)
12.	wt/gal - Spray	Not available	Not available
13.	wt Solids - Spray	66.8% (4)	51.4% (5)
14.	Resistance or Conductance	2.5 MΩ	1.5 MΩ

(1) D x D reducer composition: 50% acetone, 30% Cellosolve® acetate, 12% toluene, 8% Solvesso® 150.

(2) #3 Zahn cup @ 24°C (76°F).

(3) #2 Zahn cup @ 25°C (77°F), converts to 22 sec on Ford #4.

(4) Mean value for 32 weight dish samples.

(5) Mean value for 15 wt dish samples.

the targets. Weight percent solids determinations were made between each test series, and at the start of each day.

During this test there was an insufficient supply of small aluminum dishes for the paint weight percent solids determination. The ASTM method was compared with Ransburg's own method using the remaining dishes. The two methods differ only in the vehicle the paint is put into for drying and in that Ransburg uses no solvent. The Ransburg method fabricates a small dish of aluminum foil and places the paint in it as a thin film for drying. The two techniques yielded almost identical results, and since the subsequent TE's fell well within our method standard deviation, the paint samples were not rerun.

TEST PARAMETERS

Based on the results of Phase I testing (refer to Section 5), the standard deviation for this test method was determined to be 2.5. Based on an allowable difference of 2 (absolute) between the measured mean TE and population mean TE, this standard deviation indicates a sample size of six observations for each test series. Table 23 provides the basis for this estimation.

A test matrix was designed to provide six runs for each of 12 configurations. The 12 configurations are described in Table 24. Each run has both the vertical cylinder and flat panel targets, for a total of eight foils per run (one observation is the average of four foils).

TEST SEQUENCE (1)

The actual test sequence was:

March 18 - Set up equipment, check out scales

March 21 - Began TE test runs, completed HSB-67-FPVC 1-3

March 22 - Ran AAE-67-FPVC 1-6

(AAE-67-FPVC-6 used the original VC wrapping technique)

March 23 - Ran AAE-51-FPVC 1-8

March 24 - Ran HSB-51-FPVC 1-6

Ran HSB-67-FPVC 3-6

---

(1) See Table 7 for nomenclature.

TABLE 23. ESTIMATION OF REQUIRED TE TEST SAMPLE SIZE FOR FUTURE LABORATORY TESTS

Allowable Error, +/-(1)	Estimated Required Sample Size for Standard Deviation of 0.5	1.0	1.5	2.0	2.5	3.0
0.5	4	16	36	62	96	138
1.0	1	4	9	16	36	62
1.5	1	2	4	7	11	16
2.0	1	1	3	4	6	9
2.5	1	1	2	3	4	6
3.0	1	1	1	2	3	4

Basis:

- o 95% level of confidence
- o Sample standard deviation = population standard deviation
- o Estimated Sample Size (n) = $(1.96 \times s/e)^2$
  where s = standard deviation
  and e = allowable error

(1) The allowable error is the size of the difference between the means (measured mean TE and population mean TE) that is considered acceptable.

TABLE 24. TEST MATRIX FOR PHASE II LABORATORY TESTS OF TE STANDARD TEST METHOD

Spray Equipment	Coating Wt. Solids	Target Configuration	Test Series Nomenclature	No. of Observations (1)
Air Atomized Electrostatic	51	Vert. Cyl.	AAE-51-VC	6
		Flat Panel	AAE-51-FP	6
	67	Vert. Cyl.	AAE-67-VC	6
		Flat Panel	AAE-67-FP	6
Air Atomized Conventional	51	Vert. Cyl.	AAC-51-VC	6
		Flat Panel	AAC-51-FP	6
	67	Vert. Cyl.	AAC-67-VC	6
		Flat Panel	AAC-67-FP	6
High Speed Bell	51	Vert. Cyl.	HSB-51-VC	6
		Flat Panel	HSB-51-FP	6
	67	Vert. Cyl.	HSB-67-VC	6
		Flat Panel	HSB-67-FP	6

(1) One observation is the average of four target foils.

March 25 - Ran AAC-67-FPVC 1-6

Ran AAC-67-FPVC 1A-4A using original VC wrapping technique

March 28 - Ran AAC-51-FPVC 1-6

Clean up

FOIL HANDLING PROCEDURES

The original vertical cylinder (VC) wrapping technique was cumbersome during the PPG test. For the second test, a candy-cane wrapping technique for VC's was proposed. The foil was to be secured at each end by O-rings (Figure 9).

The recommended candy-cane wrapping technique was tried for several preliminary runs. This method also was cumbersome and it allowed underspray through the seams onto the VC post. It was abandoned in favor of Ransburg's own technique.

Ransburg cuts foil to the length of the target, then hand wraps the foil vertically around the length of each cylinder (Figure 5). The foil is crimped into place by hand. No tape or O-rings are required.

This VC wrapping technique was used throughout the Ransburg tests. Four runs (16 cylinders) were made using the original wrapping technique for comparison.

QA/QC PROCEDURES

All quality assurance/quality control procedures in the approved Test Plan were followed (See Section 4). In addition to the recommended practices, it is recommended that all associated pressure gages be calibrated before testing. Calibration devices are usually standard equipment for testing laboratories but may be obtained at a reasonable cost from suppliers.

Other recommendations are detailed in Section 9.

TEST RESULTS

General

Transfer efficiency measurements were made for a total of 12 test series. These series encompassed a test matrix of three types of spray equipment, two coatings, and two target configurations. Six runs of eight foils (four on vertical cylinder, four on flat panel) were coated to determine transfer efficiency, constituting each test series. The rationale for selecting a

VERTICAL CYLINDER TARGET

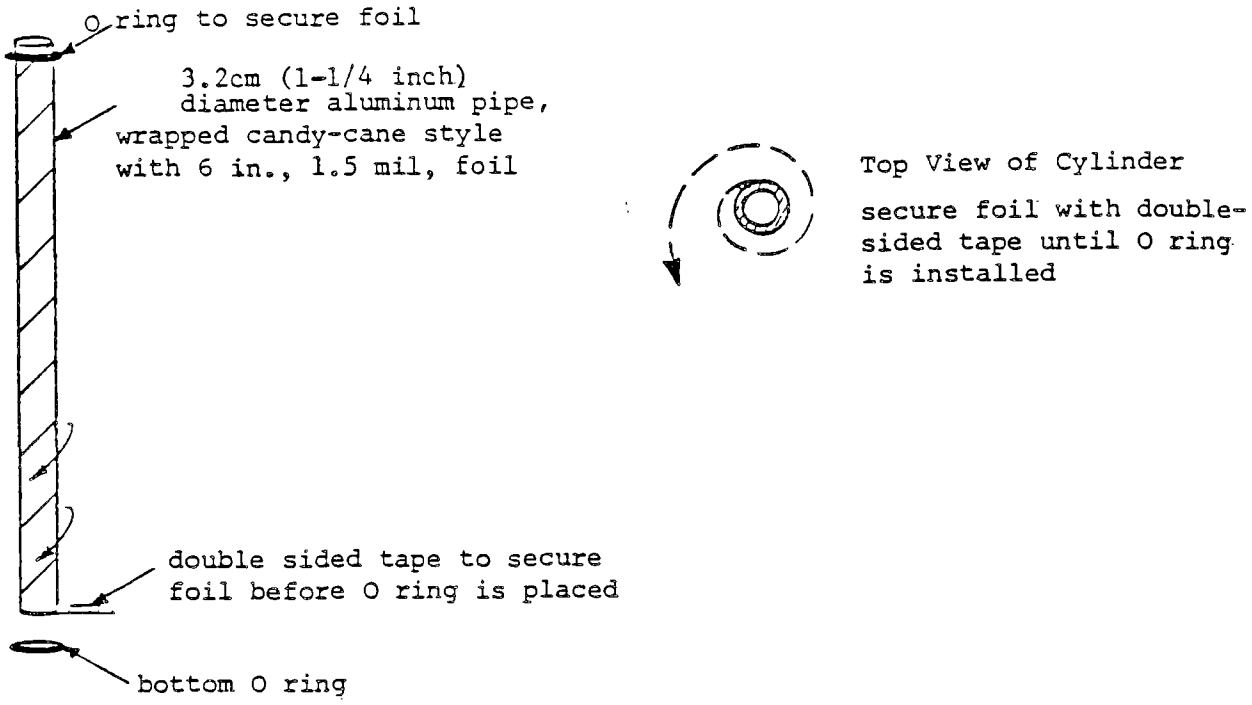

FLAT PANEL TARGET

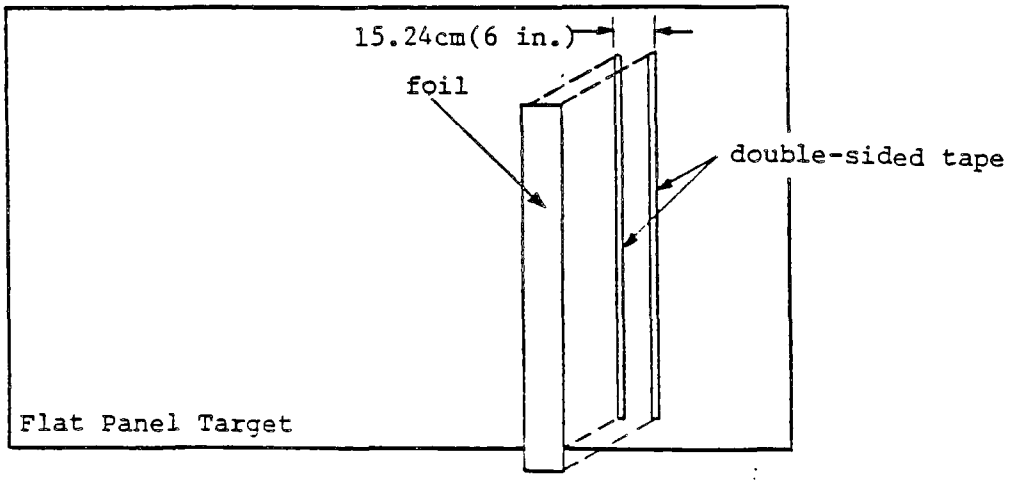

Figure 9. Foil Attachment Techniques for Vertical Cylinder (VC) and Flat Panel (FP) Targets Proposed for Ransburg Test

sample size of six observations for each test series was discussed earlier. Forty-eight measurements per test series were obtained by coating eight foils per target assembly for each of the six runs. Table 25 summarizes the results of the tests based on evaluating the data under the following two scenarios:

- Each test series is composed of 24 observations from six groups of four foils each.

- Each test series is composed of six observations; each observation is the average of a group of four foils.

These two different scenarios for evaluating the data are shown to reconfirm the original assessment of whether or not a group of four foils should be treated as four separate observations or as one observation that is the average of four foils. As outlined in Section 5, treating the test data for each test series as two observations composed of the averages of four foils each is a conservative approach. Realistically, the data obtained in the tests are equivalent to a sample size somewhere between 6 and 24. The more conservative approach (data treated as six observations of four foils each) is the preferred technique for estimating the overall precision of the test method.

In both scenarios, the measured mean TE values are equal. However, the standard deviations and coefficients of variation are different. For example, the measured mean TE values ranged from a low of 14.7 percent for the air atomized conventional gun spraying 67-percent solids paint at a vertical cylinder target, to a high of over 100 percent (this is explained later) for a high speed rotating bell delivering 67-percent solids paint to a vertical cylinder target.

For the standard deviations, however, the two different data handling scenarios produced noticeably different results as expected. In the first case (data treated as 24 individual observations), the standard deviations ranged from 0.8 to 5.2. The standard deviations in the second case (data treated as six observations of four foils each), ranged from 0.2 to 2.4. Similarly, the coefficients of variation, which are a measure of the relative precision among test series, ranged from 1.8 to 9.5 percent for the first case and 1.0 to 3.4 percent for the second case.

Having calculated the standard deviations for each test series, the analyses proceeded to an evaluation of the poolability of the variances to determine if a statement could be made concerning the overall precision of the test method. Bartlett's Test was used to examine the homogeneity of the variances of the test series.

From the Bartlett's Test it was found that the variances of all 12 test series could not be considered homogeneous for either of the cases in Table 25. The analyses then proceeded to an examination of the following various groups of data:

- Compare poolability of variances for TE's obtained from the same spray equipment type (4 TE's = 2 targets x 2 coatings); 3 gun groups to be evaluated.

- Compare poolability of variances for TE's obtained for the same target configuration (6 TE's = 3 spray equipment x 2 coatings); 2 target groups to be evaluated.

- Compare poolability of variances for TE's obtained for the same coating (6 TE's = 3 spray equipment x 2 targets); 2 coatings groups to be evaluated.

- Several combinations of the first group.

These analyses were performed for only the second case, i.e., treating the data for each test series as six samples of four foils each. The results of these analyses are shown in Table 26. The pooled standard deviations ranged from 1.5 to 2.0; however, the pooled standard deviation for the maximum sample size of 48 was 1.8. This value is lower than the 2.5 estimated from the Phase I laboratory test.

The results on Table 26 do not include HSB-67-FPVC-2, which was eliminated through an outlier analysis (ASTM E180). Confirmation runs using the original VC wrapping technique are also not included.

Air Atomized Electrostatic Test Results

Table 27 presents the results of six test runs using air atomized electrostatic paint spray equipment. Transfer efficiencies for flat panel targets ranged from 87.4 (AAE-51-FP-6) to 93.4 (AAE-51-FP-2) percent. The standard deviation was 1.7 to 2.4. The relative precision of these runs as expressed by coefficient of variation was 1.9 to 2.6 percent.

Vertical cylinder TE's ranged from 50.4 (AAE-67-VC-6) to 63.5 (AAE-51-VC-5) percent. The standard deviation was 1.8 to 2.1. The coefficient of variation was 3.4 to 3.5 percent.

A summary of equipment operating conditions for the air atomized electrostatic test series is shown in Table 28.

TABLE 25. SUMMARY OF TE TEST RESULTS
RANSBURG TEST

		CASE 1: Data Treated as 24 indiv. observations		CASE 2: Data treated as 6 observations of 4 foils ea.	
Test Series	TEM, %	S	COV,%	S	COV,%
AAE-51-VC	61.3	2.3	3.8	2.1	3.4
51-FP	90.7	3.7	4.1	2.4	2.6
67-VC	51.5	1.9	3.7	1.8	3.5
67-FP	90.3	2.6	2.9	1.7	1.9
AAC-51-VC	15.8	0.8	5.1	0.2	1.3
51-FP	76.5	3.3	4.3	0.8	1.0
67-VC	14.7	1.4	9.5	0.5	3.4
67-FP	75.5	3.2	4.2	2.1	2.8
HSB-51-VC	103.0	5.2	5.0	1.5	1.5
51-FP	101.6	1.8	1.8	1.4	1.4
67-VC	101.0	4.7	4.6	1.5	1.5
67-FP	102.1	2.0	2.0	1.6	1.6
RANGE		0.8-5.2	1.8-9.5	0.2-2.4	1.0-3.4

NOTES:

TEM = Mean Transfer Efficiency

S = Standard deviation = $[TE_1-TEM)^2 + (TE_2-TEM)^2 + \ldots]^{0.5}$

COV = Coefficient of Variation (S/TEM) X 100%

TABLE 26. RESULTS OF BARTLETTS'S TEST FOR EVALUATION OF POOLABILITY OF VARIANCES AT 95% LEVEL OF CONFIDENCE

PHASE II (RANSBURG)

Test Series Evaluated	No. of Test Series	No. of Observations(1)	Pooled Standard Deviation,%
I. All Test series	12	72	Not poolable
II. Groups of test series			
A. Same spray equipment type			
1. Air atomized electrostatic	4	24	2.0
2. Air atomized conventional	4	24	Not poolable
3. High speed bell	4	24	1.5
B. Same target configuration			
1. Vertical cylinders	6	36	Not poolable
2. Flat panels	6	36	1.7
C. Same coating			
1. Paint 2 (51% wt)	6	36	Not poolable
2. Paint 1 (67% wt)	6	36	1.6
III. Combinations of groups			
A. Group A1 & A2	8	48	Not poolable
B. Group A1 & A3	8	48	1.8
C. Group A2 & A3	8	48	Not poolable

(1) Data treated as six observations of four foils each per test series.

TABLE 27. TRANSFER EFFICIENCY DATA, RANSBURG LABORATORY TEST, MARCH 21-29, 1983 (1)

Paint Wt % Solids	Target	Run 1 Foil No. 1	2	3	4	TE1 (2)	Run 2 Foil No. 1	2	3	4	TE2 (2)	Run 3 Foil No. 1	2	3	4	TE3 (2)	Run 4 Foil No. 1	2	3	4	TE4 (2)
AAE 51	VC	63.3	60.6	62.3	63.2	62.4	63.2	61.2	61.0	64.8	62.6	61.2	60.9	61.2	63.7	61.8	60.4	57.5	59.4	61.2	59.6
51	FP	88.6	92.6	94.8	92.1	92.0	85.9	92.4	98.5	96.8	93.4	94.3	94.3	92.0	88.8	92.4	86.8	90.5	93.5	91.6	90.6
67	VC	50.9	52.0	51.6	54.0	52.1	52.7	54.3	54.1	56.0	54.3	52.1	51.4	50.9	53.1	51.9	48.7	48.2	48.8	50.4	49.0
67	FP	87.6	92.0	91.6	90.1	90.3	90.3	94.2	95.9	93.0	93.3	87.2	91.5	92.3	90.1	90.3	85.6	89.9	91.1	88.6	88.8
AAC 51	VC	16.5	14.7	15.2	16.4	15.7	17.4	14.9	15.7	15.7	15.9	17.2	15.7	15.1	16.1	16.0	16.3	15.8	14.5	16.1	15.7
51	FP	75.8	76.7	72.2	75.0	74.9	68.5	78.0	78.1	82.8	76.9	79.5	80.0	74.9	74.6	77.3	73.8	77.7	76.1	78.1	76.4
67	VC	15.1	13.7	15.1	13.9	14.5	16.9	14.1	14.1	15.5	15.2	17.7	15.2	13.4	15.4	15.4	16.3	14.4	13.6	15.8	15.0
67	FP	70.4	73.4	72.2	76.0	73.0	71.5	78.7	78.9	82.3	77.9	75.0	77.9	72.1	78.0	75.8	73.8	76.1	73.9	77.5	75.3
HSB 51	VC	106.6	103.1	99.3	110.9	105.0	104.1	97.2	96.1	108.2	101.4	105.7	93.4	96.3	106.4	101.7	106.6	99.5	97.3	109.1	103.1
51	FP	102.2	101.4	101.7	103.8	102.3	100.4	98.0	98.6	101.8	99.7	100.6	98.9	98.5	101.5	99.9	102.9	102.1	100.7	103.5	102.3
67	VC	103.2	96.8	98.6	103.5	100.5			OUTLIER			101.1	102.5	95.3	105.1	101.0	104.3	95.1	94.4	106.4	100.0
67	FP	102.5	99.3	98.9	100.5	100.3						103.3	101.0	99.4	103.5	101.8	102.9	102.0	101.7	104.2	102.7

TABLE 27 (continued)

Paint Wt % Solids	Target	Run 5 Foil No. 1	2	3	4	TE5 (2)	Run 6 Foil No. 1	2	3	4	TE6 (2)	Run 7 Foil No. 1	2	3	4	TE7 (2)	TEm (3)	S (4)	COV (5)
AAE 51	VC	63.5	61.4	63.5	65.7	63.5	57.5	57.6	58.6	58.8	58.1						61.3	2.1	3.4
51	FP	84.9	89.0	91.0	88.6	88.4	83.6	87.5	90.3	88.3	87.4						90.7	2.4	2.6
67	VC	49.5	51.7	51.3	51.6	51.0	50.0	50.4	50.3	51.0	50.4(6)						51.5	1.8	3.5
67	FP	84.7	90.2	90.6	88.3	88.5	88.2	90.2	93.2	89.9	90.4						90.3	1.7	1.9
AAC 51	VC	16.0	15.7	15.4	14.8	15.5	17.3	14.9	15.4	15.9	15.9						15.8	0.2	1.3
51	FP	70.8	78.7	77.7	81.0	77.0	72.9	77.8	74.9	79.9	76.4						76.5	0.8	1.0
67	VC	12.7	17.3	13.4	13.4	14.2	15.5	13.1	13.6	14.7	14.2						14.7	0.5	3.4
67	FP	78.0	80.9	77.2	74.6	77.7	75.1	75.1	70.6	71.9	73.2						75.5	2.1	2.8
HSB 51	VC	108.2	101.1	111.3	97.6	104.6	103.8	97.5	97.0	110.2	102.1						103.0	1.5	1.5
51	FP	103.1	101.4	101.2	103.2	102.2	104.6	102.1	104.0	101.3	103.0						101.6	1.4	1.4
67	VC	103.0	95.6	94.1	105.8	99.6	106.6	100.3	99.5	109.2	103.9	103.4	94.9	97.0	108.1	101.0	101.0	1.5	1.5
67	FP	102.0	99.9	100.4	101.3	100.9	105.3	102.7	104.2	107.0	104.8	103.6	99.5	101.2	103.3	101.9	102.1	1.6	1.6

(1) TE calc'd to 0.1%, statistics calc'd to 0.1%.
(2) TEn= arithmetic avg of foils (1-4)n.
(3) TEm= arithmetic avg of all TEn.
(4) S= standard deviation = $[(TE1-TEm)^2 + (TE_2-TE,)^2 + \ldots]^{0.5}$
(5) COV= coefficient of variation = S/TEm X 100.
(6) This run using Tape Wrap Tech.

TABLE 28. AAE PAINT SPRAY AND PERIPHERAL EQUIPMENT SPECIFICATIONS

A. Paint Supply Tank	
1. Type	Pressure Pot
2. Manufacturer	Binks
3. Model No.	83-5508
4. Serial No.	
5. Rated Capacity, gallons	2
B. Paint Spray Equipment	
1. Type	Electrostatic Hand Gun
2. Manufacturer	Nordson
3. Model No.	AN-8
4. Serial No.	
5. Rated Capacity, cc/min	
6. Air Cap	987
7. Fluid Tip	228
8. Needle	
C. Paint Spray Booth	
1. Type	Open
2. Manufacturer	
3. Model No.	
4. Serial No.	
5. Rated Capacity, cfm	
D. Conveyor	
1. Type	Over-Head
2. Manufacturer	Richards-Wilcox Mfg.
3. Model No.	
4. Serial No.	
E. Forced Draft Oven	
1. Type	Electric
2. Manufacturer	Young Brothers
3. Model No.	
4. Serial No.	
F. Paint Heaters	
1. Type	
2. Manufacturer	
3. Model No.	
4. Serial No.	

TABLE 28 (continued)
AAE EQUIPMENT OPERATING CONDITIONS

A. Paint Spray Equipment	
1. Paint Pressure at Paint Pot, kPa (psig)	5.32 (22)
2. Paint Pressre at Spray Gun, kPa (psig)	N/A
3. Atomizing Air Pressure at Spray Gun, kPa (psig)	
4. Operating Voltage, kV	63
5. Disk or Bell Speed, rpm	
a. With Paint Applied	
b. Without Paint Applied	
6. Shaping Air for Bell, psig	
7. Paint Temperature at Paint Pot, °F	
8. Gun to Target Distance, cm (in)	30.5 (12)
B. Paint Spray Booth	
1. Ambient Temperature, °C (°F)	24 (76)
2. Relative Humidity, %	19
3. Air Flow Velocity, m/s (fpm)	0.5 (100)
4. Air Flow Direction	Normal to target
C. Target Parameters	
1. Average Wet Film Thickness, cm (mils)	$5x10^{-3}$ (2.0)
2. Vertical Paint Coverage	
3. Target Height, cm (in)	
4. % Vertical Coverage	45 (est)
5. Resistance to Ground, Ohm	$>10^6$
D. Forced Draft Oven (1)	
1. Cure Time, minutes	
a. Foil Dish (sample)	67% 600 s @ 177°C (10 min at 350°)
b. Target Foil	51% 1800 s @ 121°C (30 min at 250°)
2. Cure Temperature	
a. Foil Dish (sample)	See above
b. Target Foil	
E. Paint Heaters	
1. Temperature In	-
2. Temperature Out	-
F. Conveyor Speed Setpoint, cm/s (fps)	15.8 (0.52)

(1) The same cure schedules were used for foils and dishes.

Air Atomized Conventional Test Results

Table 27 summarizes the results of all six test series for air atomized conventional paint spray equipment. Flat panel transfer efficiencies ranged from 73.0 (AAC-67-FP-1) to 77.9 (AAC-67-FP-2). Vertical cylinder transfer efficiencies ranged from 14.2 (AAC-67-VC-5 and 6) to 16.0 (AAC-51-VC-3). The standard deviations were 0.2 to 2.1, indicating good precision.

In addition to the six scheduled runs, four additional runs were made using the original vertical cylinder wrapping technique (Figure 7) with conventional flat panel targets accompanying as controls. These runs are compared with the new (Ransburg) wrapping method in Section 7.

A summary of operating conditions for the air atomized conventional equipment is presented in Table 29.

High Speed Bell Test Results

Table 27 summarizes the results from seven test runs on the high speed bell paint spray equipment. Test conditions are summarized on Table 30. One set of runs (HSB-67-FP-VC-2) was eliminated by an outlier analysis, leaving six complete runs. Transfer efficiencies for flat panel targets range from 99.7 (HSB-51-FP-2) to 104.8 (HSB-67-FP-6), with a standard deviation of 1.4 to 1.6. The coefficient of variation is low, from 1.4 to 1.6 percent.

Transfer efficiencies for vertical cylinder targets range from 99.6 (HSB-51-VC-1) to 105.0 (HSB-51-VC-1), with a standard deviation of 1.5. The coefficient of variation is a very low 1.5 percent.

It is obvious that transfer efficiency cannot exceed 100 percent. The HSB data points to a consistent system or method error in determining TE. When TE's began appearing at 100+ percent, every possible physical testing error was examined. Several more weight percent solids determinations were made, scales were recalibrated, and new runs were made. No equipment error was found, but an explanation for the high TE's was discovered.

The original test method called for 400 g of paint to be sprayed before passing the targets in front of the gun. In the Ransburg test about 100 g was sprayed before the target was passed through. (Paint was in short supply.) When the 100 g spray was initiated, the targets were about 5 feet down the conveyor in the open booth, moving towards the gun. Some of this paint had the capability of remaining suspended long enough to eventually coat the targets considering the electrostatic

TABLE 29. AAC PAINT SPRAY AND PERIPHERAL EQUIPMENT SPECIFICATIONS

A. Paint Supply Tank	
1. Type	Pressure Pot
2. Manufacturer	Binks
3. Model No.	83-5508
4. Serial No.	
5. Rated Capacity, gallons	2
B. Paint Spray Equipment	
1. Type	Conventional Air Spray
2. Manufacturer	Binks
3. Model No.	21
4. Serial No.	36113
5. Rated Capacity, cc/min	
6. Air Cap	63 PB
7. Fluid Tip	63C
8. Needle	
C. Paint Spray Booth	
1. Type	Open
2. Manufacturer	
3. Model No.	
4. Serial No.	
5. Rated Capacity, cfm	
D. Conveyor	
1. Type	Over-Head
2. Manufacturer	Richards-Wilcox Mfg.
3. Model No.	
4. Serial No.	
E. Forced Draft Oven	
1. Type	Electric
2. Manufacturer	Young Brothers
3. Model No.	
4. Serial No.	
F. Paint Heaters	
1. Type	
2. Manufacturer	
3. Model No.	
4. Serial No.	

TABLE 29 (continued)
AAC EQUIPMENT OPERATING CONDITIONS

A. Paint Spray Equipment	
1. Paint Pressure at Paint Pot, kPa (psig)	3.73 (11)
2. Paint Pressre at Spray Gun, kPa (psig)	
3. Atomizing Air Pressure at Spray Gun, kPa (psig)	453 (51)
4. Operating Voltage, kV	0
5. Disk or Bell Speed, rpm	
a. With Paint Applied	
b. Without Paint Applied	
6. Shaping Air for Bell, psig	
7. Paint Temperature at Paint Pot, °F	
8. Gun to Target Distance, cm (in)	30.5 (12)
B. Paint Spray Booth	
1. Ambient Temperature, °C (°F)	23 (73)
2. Relative Humidity, %	25
3. Air Flow Velocity, m/s (fpm)	0.5 (100)
4. Air Flow Direction	Normal
C. Target Parameters	
1. Average Wet Film Thickness, cm (mils)	7.6×10^{-3} (3.0)
2. Vertical Paint Coverage, cm (in)	(16)
3. Target Height, cm (in)	varied
4. % Vertical Coverage	45
5. Resistance to Ground, Ohm	$<10^6$
D. Forced Draft Oven (1)	
1. Cure Time, minutes	
a. Foil Dish (sample)	67%-600 s @ 177°C (10 min at 350°F)
b. Target Foil	51%-1800 s @ 121°C (30 min at 250°F)
2. Cure Temperature	
a. Foil Dish (sample)	See above
b. Target Foil	
E. Paint Heaters	
1. Temperature In	-
2. Temperature Out	-
F. Conveyor Speed Setpoint, cm/s (fpm)	16.0 (0.52)

(1) The same cure schedule was used for foils and dishes.

TABLE 30. HSB PAINT SPRAY AND PERIPHERAL EQUIPMENT SPECIFICATIONS

A. Paint Supply Tank	
1. Type	DC Pump
2. Manufacturer	Ransburg
3. Model No.	9966-01
4. Serial No.	
5. Rated Capacity, gallons	
B. Paint Spray Equipment	
1. Type	High Speed Bell
2. Manufacturer	Ransburg
3. Model No.	20 865-04
4. Serial No.	
5. Rated Capacity, cc/min	
6. Air Cap	
7. Fluid Tip	
8. Needle	
C. Paint Spray Booth	
1. Type	Open
2. Manufacturer	
3. Model No.	
4. Serial No.	
5. Rated Capacity, cfm (ft^3/min)	
D. Conveyor	
1. Type	Over-Head
2. Manufacturer	Richards-Wilcox Mfg.
3. Model No.	
4. Serial No.	
E. Forced Draft Oven	
1. Type	Electric
2. Manufacturer	Young Brothers
3. Model No.	
4. Serial No.	
F. Paint Heaters	
1. Type	
2. Manufacturer	
3. Model No.	
4. Serial No.	

TABLE 30 (continued)
HSB EQUIPMENT OPERATING CONDITIONS

A. Paint Spray Equipment	
1. Paint Pressure at Paint Pot, kPa (psig)	-
2. Paint Pressre at Spray Gun, kPa (psig)	-
3. Atomizing Air Pressure at Spray Gun, kPa (psig)	205 (15)
4. Operating Voltage, kV	80
5. Disk or Bell Speed, rps (rpm)	
a. With Paint Applied	167 (10000)
b. Without Paint Applied	333 (20000)
6. Shaping Air for Bell, kPa (psig)	308 (30)
7. Paint Temperature at Paint Pot, °C (°F)	
8. Gun to Target Distance, cm (in)	28 (11)
9. Pump Setting	1.45
B. Paint Spray Booth	
1. Ambient Temperature, °F	75°
2. Relative Humidity, %	18
3. Air Flow Velocity, m/s (rpm)	0.5 (100)
4. Air Flow Direction	Normal to target
C. Target Parameters	
1. Average Wet Film Thickness, cm (mils)	5.1×10^{-3} (2.0)
2. Average Dry Film Thickness	1.2
2. Vertical Paint Coverage, cm (in)	81 (32)
3. Target Height, cm (in)	152 (60)
4. % Vertical Coverage	53
5. Resistance to Ground, Ohm	<1 million
D. Forced Draft Oven (1)	
1. Cure Time, minutes	
a. Foil Dish (sample)	67%-600 s @ 177°C (10 min at 350°F)
b. Target Foil	51%-1800 s @ 121°C (30 min at 250°F)
2. Cure Temperature, °F	
a. Foil Dish (sample)	See above
b. Target Foil	
E. Paint Heaters	
1. Temperature In, °F	-
2. Temperature Out, °F	-
F. Conveyor Speed Setpoint, cm/s (fpm)	16 (0.52)

(1) Same cure schedule for foils and dishes.

nature of the process. In the original test, the targets were outside the closed booth while 400 g were sprayed. Thus, the targets in the Ransburg test were probably exposed to more paint than was measured.

Table 31 represents an approximation of the TE's when corrected for the paint sprayed 2 feet before the first timing mark. This approximation is based on observations during the tests. As can be seen, the correction brings HSB TE's into a range more comparable to Phase I.

Based on the correction, HSB flat panel TE's were 88.7 to 93.2 percent with standard deviation of 1.2 to 1.5. The coefficient of variation was 1.3 to 1.7 percent. Vertical cylinder TE's were 88.9 to 93.3 percent with standard deviation of 1.4. The VC coefficient of variation was 1.5 to 1.6 percent.

TABLE 31. TRANSFER EFFICIENCY DATA

Ransburg Laboratory Test March 21-29, 1983
Corrected HSB Transfer Efficiency Data (1)

Paint Wt % Solids	Target	Run 5 Foil No. 1	2	3	4	TE5 (2)	Run 6 Foil No. 1	2	3	4	TE6 (2)	Run 7 Foil No. 1	2	3	4	TE7 (2)	TEm (3)	S (4)	COV (5)
51	VC	96.2	89.8	98.9	87.8	93.2	92.2	86.6	86.2	97.9	90.7	-	-	-	-	-	91.6	1.4	1.5
51	FP	91.7	90.1	89.9	91.7	90.9	93.0	90.8	92.5	90.0	91.6	-	-	-	-	-	90.3	1.2	1.3
67	VC	91.6	85.0	83.7	94.0	88.6	94.8	89.2	88.5	97.1	92.4	92.0	84.3	86.2	96.1	89.7	89.8	1.4	1.6
67	FP	90.7	88.8	89.2	90.0	89.7	93.6	91.3	92.7	95.1	93.2	92.1	88.5	90.0	91.8	90.6	90.8	1.5	1.7

(1) These calculations assume that the paint sprayed 2 ft prior to target arrival has the capability of staying dispersed long enough to attach to the targets. Constant flow rate and conveyor speed are assumed for the additional 2 ft. (See Section 7 for further discussion.) TE calc'd to 0.1%, statistics calc'd to 0.1%.

(2) TEn= arithmetic avg of foils (1-4)n.

(3) TEm= arithmetic avg of all TEn.

(4) S= standard deviation = $[(TE1-TEm)^2 + (TE_2-TEm)^2 + \ldots]^{0.5}$

(5) COV= coefficient of variation = S/TEm X 100.

TABLE 31 (continued)

Ransburg Laboratory Test March 21-29, 1983
Corrected HSB Transfer Efficiency Data (1)

Paint Wt % Solids	Target	Run 5 Foil No. 1	2	3	4	TE5 (2)	Run 6 Foil No. 1	2	3	4	TE6 (2)	Run 7 Foil No. 1	2	3	4	TE7 (2)	TEm (3)	S (4)	COV (5)
51	VC	96.2	89.8	98.9	87.8	93.2	92.2	86.6	86.2	97.9	90.7	-	-	-	-	-	91.6	1.4	1.5
51	FP	91.7	90.1	89.9	91.7	90.9	93.0	90.8	92.5	90.0	91.6	-	-	-	-	-	90.3	1.2	1.3
67	VC	91.6	85.0	83.7	94.0	88.6	94.8	89.2	88.5	97.1	92.4	92.0	84.3	86.2	96.1	89.7	89.8	1.4	1.6
67	FP	90.7	88.8	89.2	90.0	89.7	93.6	91.3	92.7	95.1	93.2	92.1	88.5	90.0	91.8	90.6	90.8	1.5	1.7

(1) These calculations assume that the paint sprayed 2 ft prior to target arrival has the capability of staying dispersed long enough to attach to the targets. Constant flow rate and conveyor speed are assumed for the additional 2 ft. (See Section 7 for further discussion.) TE calc'd to 0.1%, statistics calc'd to 0.1%.

(2) TEn= arithmetic avg of foils (1-4)n.

(3) TEm= arithmetic avg of all TEn.

(4) S= standard deviation = $[(TE1-TEm)^2 + (TE_2-TEm)^2 + \ldots]^{0.5}$

(5) COV= coefficient of variation = S/TEm X 100.

SECTION 7

TEST COMPARISON

EFFECT OF FOIL WRAP TECHNIQUE - VERTICAL CYLINDER

The method used to attach the foil to the vertical cylinder targets during Phase I testing proved highly unsatisfactory. As discussed in Section 5, the foil could be removed from the double-sided tape without losing paint only with great difficulty. Therefore, it was decided that the "tape wrap" method would not be used in subsequent tests. Instead the "crimp" method described in Section 6 was used in Phase II.

It was decided to conduct a series of tests to compare transfer efficiency results obtained with each method of foil attachment. The objective of these tests was to provide data necessary for the determination of the extent to which the foil attachment method influenced the resulting transfer efficiency, if at all. The t-test of the difference between two means was then applied to the resulting data as follows.

The air atomized conventional (AAC) spray gun was selected for this purpose in order to minimize the number of observations required to detect a small difference in transfer efficiency. The standard deviation of the transfer efficiency results obtained during Phase I testing using the AAC spray gun (taking each cylinder as an individual observation) had been found to be the least of any spray apparatus.

Thus, using the AAC configuration, four runs of four cylinders each were performed as a special test using the tape wrap method of foil attachment. Each of the four runs was made under the same conditions using the air atomized conventional gun with the high solids paint. Resulting transfer efficiencies are given in Table 32.

TABLE 32. TESTS TO DETERMINE EFFECT OF FOIL ATTACHMENT METHOD AAC-67-VC: TAPE WRAP METHOD

	Transfer Efficiency				
	Foil No.				
Run No.	1	2	3	4	TE_n
1A	14.0	12.5	13.1	13.6	13.4
2A	15.1	13.9	13.8	13.8	14.2
3A	16.8	14.3	11.8	15.3	14.6
4A	15.1	13.7	12.2	13.0	13.5

These results may be compared with the following values, reproduced here from Table 27, showing transfer efficiencies resulting from tests carried out under identical conditions using the crimp method of foil attachment.

TABLE 33. TESTS TO DETERMINE EFFECT OF FOIL ATTACHMENT METHOD AAC-67-VC: CRIMP METHOD(1)

	Transfer Efficiency				
	Foil No.				
Run No.	1	2	3	4	TE_n
1	15.1	13.7	15.1	13.9	14.5
2	16.9	14.1	14.1	15.5	15.2
3	17.7	15.2	13.4	15.4	15.4
4	16.3	14.4	13.6	15.8	15.0
5	12.7	17.3	13.4	13.4	14.2
6	15.5	13.1	13.6	14.7	14.2

(1) From Table 27.

The standard deviation of the 16 observations using the tape wrap method (Table 32) is 1.25. The standard deviation of the 24 observations using the crimp method is 1.37. The ratio of variances (F-statistic) then is 1.19. Since the critical value of F at the 0.1 level, for 23 and 15 degrees of freedom, is 1.9, these variances are homogenous and therefore poolable. The pooled standard deviation may be shown to be 1.32.

Given a standard deviation of 1.32, the number of observations required for the t-test to detect a difference of 2 while controlling both the α risk and the β risk to the 0.05 level is 13.[1] Eighteen observations are required to reduce the risk to 0.01. With 16 observations of the tape wrap method and 24 of the crimp method, the β risk may be said to be controlled at a level below 0.05 when the t-test is performed at the 0.05 level. The α risk is the risk of deciding that two samples were drawn from two different populations when in reality they came from the same population. The β risk, perhaps more crucial for the present consideration, is the risk of deciding that the samples are drawn from the same population when in reality there is a real difference of at least the magnitude specified.

The value of the t-statistic is given by:

$$t = \frac{TE_m \text{ (crimp)} - TE_m \text{ (wrap)}}{S\sqrt{\frac{1}{24} + \frac{1}{16}}} = 1.99$$

with 38 degrees of freedom.

The critical value of t at the 0.05 level with 38 degrees of freedom is 2.03. Thus, the value of t for this test is not significant at the specified level. It is therefore concluded that the transfer efficiency results from the two methods of foil attachment do not differ significantly, with the risk of their actually differing by 2 or more equal to less than 0.05.

This result is further verified by the single run (Run 6) performed using the tape wrap technique in the AAE-HS-VC series (see Table 27, footnote 6). That run resulted in a transfer efficiency of 50.4, compared to the mean transfer efficiency for all 6 runs taken together of 51.5.

COMPARISON OF INTERLABORATORY VARIANCES

The results from each of the two participating laboratories may be compared to determine if a significant difference in test precision exists between laboratories. Table 34 shows the standard deviations at each laboratory for each test series, treating each target as a separate observation.

---

[1] Davies, O. L., The Design and Analysis of Industrial Experiments, 2nd Edition, Table E-1, pp 609-611. Imperial Chemical Industries Ltd., London.

The F-statistic is equal to the ratio of the variances, the squares of the standard deviations. Degrees of freedom associated with numerator and denominator are 23 and 7, or 7 and 23, depending on whether Phase I results or Phase II results exhibited the greater variance. The test for significance is a two-tailed test, because the question being tested is whether the precision at either laboratory is significantly different (greater or less) than the precision at the other.

TABLE 34. COMPARISON OF VARIANCES FOR TESTS AT EACH LABORATORY (1)

	$S_I(8)$	$S_{II}(24)$	F	$F_{.05}$
AAE-51-VC	1.7	2.3	1.83	4.4
* 51-FP	1.3	3.7	8.10	4.4
67-VC	1.6	1.9	1.41	4.4
67-FP	1.9	2.6	1.87	4.4
AAC-51-VC	0.7	0.8	1.31	4.4
* 51-FP	1.2	3.3	7.56	4.4
* 67-VC	0.6	1.4	5.44	4.4
67-FP	1.6	3.2	4.00	4.4
HSB-51-VC	2.8	5.2	3.45	4.4
51-FP	1.9	1.8	1.11	2.9
67-VC	5.2	4.7	1.22	2.9
67-FP	1.1	2.0	3.31	4.4

(1) Each Target Considered a Separate Observation.

* Significant at 0.05 level

Table 34 shows that variances for 3 test series are found to differ significantly between laboratories. In each of these three cases, the precision exhibited in the Phase II testing at Ransburg is poorer. No significant difference at the 0.05 level is found for the other nine test series.

The precision of the test at each laboratory was found to be 2.5 standard deviation for Phase I and 1.8 standard deviation for Phase II based on the largest number of poolable observations in each case. (For both laboratories it was found that all air atomized electrostatic and all high speed bell results could be pooled.) This pooling was performed using standard deviations based on treating the mean of four targets as a single observation. In contrast, Table 34 is based on treating each target as a separate observation, because the single degree of freedom associated with Phase I results when treating four targets as a single observation is not sufficient to provide for a meaningful test.

The pooled estimates of precision for each laboratory may be tested to determine if they differ significantly. The ratio of variances is $(2.5/1.8)^2 = 1.93$, with 15 and 47 degrees of freedom. The critical value of F for a double-tailed test at the 0.05 level is 2.12. Thus, the overall test precision (repeatability) at each of the two laboratories is not significantly different. Pooling the two estimates of standard deviation gives an overall test precision of 2.0.

ANALYSIS OF VARIANCE FOR PAINT, LABORATORY

This section presents a two-way analysis of variance (ANOVA) for the transfer efficiency results obtained using each combination of spray gun and target. The objective of the analysis is the determination of the relative influence of laboratory and paint type on transfer efficiency, and the estimation of intralaboratory precision (repeatability) and the interlaboratory precision (reproducibility).

Table 35 presents values of transfer efficiency obtained under each test condition. Considering a single observation to be the mean of four targets, two observations were obtained for each treatment during Phase I, and six observations for Phase II, which constitutes an unbalanced experimental design.

TABLE 35. ANALYSIS OF VARIANCE - TRANSFER EFFICIENCY

	Laboratory I	Laboratory II		Laboratory I	Laboratory II	
	29.7	62.4	59.6	81.4	92.0	90.6
51		62.6	63.5		93.4	88.4
Paint	32.0	61.8	58.1	81.1	92.4	87.4
	26.0	52.1	49.0	80.2	90.3	88.8
67		54.3	51.0		93.3	88.5
	25.4	51.9	50.4	82.7	90.3	90.4
	a. AAE-VC			b. AAE-FP		
	10.9	15.7	15.7	61.4	74.9	76.4
51		15.9	15.5		76.9	77.0
Paint	10.7	16.0	15.9	62.1	77.3	76.4
	10.2	14.5	15.0	60.8	73.0	75.3
67		15.2	14.2		77.9	77.7
	10.2	15.4	14.2	60.8	75.8	73.2
	c. AAC-VC			d. AAC-FP		
	93.0	105.0	103.1	91.0	102.3	102.3
51		101.4	104.6		99.7	102.2
Paint	89.6	101.7	102.1	91.7	99.9	103.0
	102.4	100.5	99.6	93.2	100.3	100.9
67		101.0	103.9		101.8	104.8
	93.9	100.0	101.0	92.3	102.7	101.9
	e. HSB-VC			f. HSB-FP		

Table 36 presents the ANOVA results in standard format. Those effects significant at the 0.01 level are noted by an asterisk. The column effect (laboratory) is significant for every configuration. The row effect (paint) is significant for two of the six configurations, but considerably less significant than the laboratory effect even in those cases. Interaction is essentially absent, although it is just significant at the .01 level for the single instance of the high speed bell - vertical cylinder case. Although there is no effect of paint for this case, the fact that interaction is present means that there is a real effect, but the effect is in opposite direction at each laboratory. Having noted this, it is interesting that the paint exhibits a real effect on transfer efficiency in all three vertical cylinder target configurations and in none of the flat panel target configurations.

Although the paints used for each phase of testing were not split from identical 67 percent solids and 51 percent solids batches, as would have been ideal, they were formulated to be similar as delivered to each laboratory. Nevertheless, because the physical properties of the two higher solids and the two lower solids paints differ to some extent between laboratories, there is concern that such a difference may be the major cause of the difference observed in transfer efficiency results at each laboratory. The analysis of variance presented here shows this to be possible but unlikely. The effect of paint on transfer efficiency, even when the paint weight percent solids is purposely varied, has been shown to be either absent or to be much less significant than the observed effect of the laboratory. Thus the reasons for the difference in results between laboratories must be sought elsewhere, as is done in the next section.

The error mean square (sum of squares divided by degrees of freedom) is an estimate of the variance associated with repeated measurements under identical conditions. Although these variance estimates are not all poolable by Bartlett's test at the 0.05 level, the variances associated with five of the six test configurations (all except the air atomized conventional spray with the vertical cylinder target) can be pooled. This pooled variance estimate is 3.33. The precision estimate associated with this variance is 1.82 (standard deviation), the test repeatability.

Reproducibility, the precision of interlaboratory testing, for these results is clearly not acceptable. The interlaboratory variance estimates (columns) shown in Table 36 are large and are poolable, with a pooled variance of 630.6, corresponding to a reproducibility estimate of 25 (standard deviation). The next section analyzes the causes of this poor test reproducibility.

TABLE 36. ANOVA RESULTS FOR PAINT AND LABORATORY

	SS		MS	F
		AAE-VC		
Rows	302.8	1	302.8	91.75*
Cols	2371.6	1	2371.6	718.66*
Int	16.8	1	16.8	5.09
Error	40.0	12	3.3	
Total	2731.2	15		
		AAE-FP		
Row	0.30	1	0.30	0.08
Col	250.25	1	250.25	65.68*
Int	0.31	1	0.31	0.08
Error	45.72	12	3.81	
Total	296.58	15		
		AAC-FP		
Row	3.90	1	3.90	1.79
Col	649.01	1	649.01	247.90*
Int	0.00	1	0.00	0.00
Error	26.14	12	2.18	
Total	679.05	15		
		AAC-VC		
Row	3.42	1	3.42	26.30*
Col	68.16	1	68.16	524.30*
Int	0.15	1	0.15	1.15
Error	1.54	12	0.13	
Total	73.27	15		
		HSB-VC		
Row	0.20	1	0.20	0.04
Col	158.40	1	158.40	29.17*
Int	58.54	1	58.54	10.78*
Error	65.15	12	5.43	
Total	282.29	15		
		HSB-FP		
Row	2.10	1	2.10	1.10
Col	286.16	1	286.16	149.82*
Int	0.61	1	0.61	0.32
Error	22.90	12	1.91	
Total	311.77	15		

*Significant at .01 level.

TEST REPRODUCIBILITY

As presented in Sections 5 and 6, high precision was observed for the results from each laboratory test. When interlaboratory results were compared, however, the reproducibility was very poor. The combination of high individual precision with low interlaboratory reproducibility pointed to systematic differences between the two laboratory tests. The test procedure, materials, and equipment for the two sets of tests were methodically compared to define any systematic differences. Three major differences between tests were documented. These differences qualitatively account for the observed discrepancies between laboratory results.

The first major difference between Phase I and Phase II testing was the paint spray booth air flow rate. During Phase I testing, the linear air velocity was measured up to 1.0 m/s (200 fpm) in the plane of the target. The air flow in the plane of the target in Phase II was undetectable. Directly in front of the fan it was only 0.5 m/s (100 fpm). This is a large difference between Phase I and Phase II conditions.

At higher booth air velocity the paint may flow more quickly past the targets towards the exhaust. Thus the atomized paint has less opportunity to coat the targets at higher booth air flow rates. This effect is observed in the significantly higher TE's for all Phase II test configurations compared to Phase I results (see Table 37).

TABLE 37. TRANSFER EFFICIENCY COMPARISON

	Phase I TE_M	Phase II TE_M	Net Difference %
VC			
AAE-51-VC	30.8	61.3	99.0
AAE-67-VC	25.7	51.5	94.2
AAC-51-VC	10.8	15.8	46.3
AAC-67-VC	10.2	14.7	44.1
HSB-51-VC	91.3	103.0	12.8
HSB-67-VC	93.9	101.0	7.6
Average	43.8	57.9	50.7
FP			
AAE-51-FP	81.2	90.7	11.7
AAE-67-FP	81.5	90.3	10.8
AAC-51-FP	61.7	76.5	24.0
AAC-67-FP	60.8	75.5	24.2
HSB-51-FP	91.3	101.6	11.3
HSB-67-FP	92.8	102.1	10.0
Average	78.2	89.5	15.3

As confirmation of the nature of this phenomenon, the VC target results would be expected to be more affected than FP target results. The VC targets have open air space between them, which allow paint to be drawn past each foil; the FP foils have no interstice to allow easy air (and atomized paint) flow past the foils. The interlaboratory data support this expectation, with the VC results being 50.7 percent different and the FP results only 15.3 percent different between laboratories (Table 37).

Another logical outcome of low booth air rates in Phase II would be more of an effect for runs with electrostatic equipment. The electrostatic attraction would help attract slow moving atomized paint to the targets. This effect is seen for AAC and AAE runs, but is obscured by other differences in the HSB runs.

Interlaboratory test results for air atomized electrostatic equipment varied more than any other test series (refer to Table 37). Vertical cylinder TE's were dramatically more affected than the flat panel TE's, pointing to a difference in attractive forces (operating voltage). Although the same model power supply was used in both laboratories, the operating voltage was about 47 kV in Phase I and 62 kV in Phase II. Higher TE's (especially for VC targets) are the reasonable consequence of higher voltages in the Phase II tests.

Finally, the test procedure was slightly altered for Phase II testing. The test procedure calls for 0.4 kg of paint to be sprayed before initiating the conveyor to pass the targets through the gun. (This requirement was made to minimize the error of having a $\pm$ 5-g paint scale accuracy for mass flow determination.) There was not enough paint left from Phase I to complete Phase II and meet the 0.4-kg requirement, so the decision was made to use 0.1 kg. It was expected that any inaccuracy introduced here would be offset by more test repetitions, as was shown.

However, the 0.4 kg in Phase I was discharged with the targets out of the booth. In Phase II, the 0.1 kg was discharged as the targets moved towards the gun, <u>inside the booth</u>. There was no way to determine mass flow with the targets on the conveyor (but outside the booth) in Phase II because of the booth configuration.

Although this procedural change should not have affected the AAC runs, the electrostatic equipment was affected. The paint sprayed as the target moved towards the gun had the capability of staying airborne long enough to be attracted to the targets as they passed through. The effect on AAE runs is probably small because the paint is sprayed directly towards the targets and exhaust system. The horizontal mass velocity of the

paint tends to carry it quickly towards the exhaust. The effect on the HSB runs is larger because the HSB produces a fog of paint with very low horizontal mass velocity. Thus the paint sprayed by the HSB is capable of staying suspended in the vicinity of the targets long enough to coat the targets. The adherence of extra paint to the HSB targets threw the TE's over 100 percent, a clear physical impossibility.

In an effort to salvage the HSB data, engineering judgment was used to correct the data for the additional paint the targets were exposed to. Based on observations during the Ransburg test, the paint was sprayed 5 feet in front of the target with the target in the booth. At PPG, the targets entered the booth 3 feet from the spray gun. The difference of 2 feet was converted to mass and subtracted from the HSB data. Corrected HSB data were presented in Section 6, Table 31. The correction, though based solely on engineering judgment, aligns Phase I results more closely than Phase II. This alignment is considered corroborative of the described effect.

Four AAE runs (AAE-67-1-4) were made during Phase II timing the flow of paint using marks at the beginning of the first scavenger and the end of the last scavenger. These runs were made to determine the effect of reduced accuracy in the paint weighing operation on the transfer efficiency determination. The standard deviation of the four runs AAE-67-FP-1 through 4 (treating the mean of 4 targets as a single observation) was 2.18. In the case of the four runs AAE-67-VC-1 through 4, the standard deviation was 1.89. A test was performed to see if either of these represents a different level of precision than that of the overall transfer efficiency test.

The pooled standard deviation, $\bar{S}$, for Phase II testing was 1.8 based on 48 observations. While Bartlett's test is appropriate for comparison of more than 2 variances, the F-statistic is used to determine if a pair of sample variances differ significantly.

The following are the calculations.

	S	S^2	$\bar{S}^2$	$F_{3,47}=S^2/\bar{S}^2$
AAE-67-FP(1-4)	2.18	4.73	3.24	1.46
AAE-67-VC(1-4)	1.89	3.56	3.24	1.10

With 3 and 47 degrees of freedom, the critical value of F for a two-sided test at the 0.1 significance level is 2.84. Therefore the null hypothesis cannot be rejected, leading to the conclusion that the variance associated with the altered test method is poolable with that of the standard method.

It is therefore recommended that the test procedure be revised to set the timing and mass flow rate marks at the scavengers. This recommendation does not have a significant effect on the test precision, while it avoids the problem of premature paint flow initiation biasing the transfer efficiency results.

SECTION 8

THIRD LABORATORY TEST

FACILITIES

The third laboratory test was performed at Nordson using the original test plan with modifications to accommodate varying several parameters for each successive run. The test was run in a 3 m (10 ft) open-faced booth contained in a 4.5 x 6.1 m (150 x 20 ft) closed room. Ventilation was provided by a multispeed fan drawing outside air once through the booth. Test equipment specifications matched or exceeded the requirements of the test plan.

DESCRIPTION OF PAINT

A 70-percent solids enamel paint with polyester resin was obtained from PPG for this test (see Table 38). The paint differs slightly from the 67-percent solids paints used in earlier tests. The weight percent solids was higher, and a small additive present in the original test paints had been deleted by the manufacturer.

A SANES Model 877 was used to measure paint resistance. ASTM D-1200-70 was used for viscosity determination. Paint weight percent solids was determined by ASTM D-2369-81 using the manufacturer's recommended cure schedule.

QA/QC PROCEDURES

All quality assurance/quality control procedures in the approved Test Plan were followed. As in Phase I and Phase II, a Master Data book was prepared prior to testing. All test documentation and data were recorded (and checked) in the Master Data book. A log book was also maintained for special notations and observations.

TEST DESIGN

According to ASTM 691-79, "The first requirement is the existence of a valid, well written test method that has been developed in one or more competent laboratories and has been

TABLE 38. PAINT SPECIFICATIONS

1.	Paint Type	Enamel
2.	Resin Type	Polyester
3.	Manufacturer	PPG
4.	Manufacturer's Paint ID No.	W45458
5.	Lot No.	--
6.	Color	Tan
7.	Recommended Cure Schedule	10 min @ 350 °F
8.	Viscosity (uncut) (1)	-- Sec.# -- Ford Cup @ °F
9.	Reducing Solvent	Solvesso
10.	Vol. of Solvent Put into Vol. Paint	700 cc (vol) solvent in 1 1/2 (vol) paint
		15 1/2 s Zahn 3
11.	Viscosity - Spray (cut) (1)	28.5 s #4 Ford Cup @ 75°F
12.	wt/gal - Spray	-- lbs/gal
13.	wt. Solids - Spray	%
14.	Resistance	1.7×10^8 MΩ

(1) Use ASTM D-1200-70, "Viscosity of Paints, Varnishes, and Lacquers by Ford Viscosity Cup." Viscosity may also be determined by ASTM D-3794, Part 6 (Zahn Cup method) in addition to the Ford Cup measurements.

subjected to a screening procedure. . .". The third laboratory test was developed to provide the required screening procedure to determine the extent to which previously uncontrolled factors influence the resulting transfer efficiency for the three equipment types previously tested. Variables were selected primarily through an analysis of the differences between Phase I and Phase II test conditions. Unknown or uncontrolled factors were selected for further testing. In addition to these variables, the Steering Committee suggested other parameters for screening testing. The following parameters were selected for screening:

AAE

- Booth air rate, fpm
- Paint mass flow, g/s
- Lag discharge distance, ft
- Shaping air
- Atomizing air, psig
- Tip voltage, kV

AAC

- Booth air rate, fpm
- Paint mass flow, g/s
- Lag discharge distance, ft
- Shaping air
- Atomizing air, psig

HSB

- Booth air rate, fpm
- Paint mass flow, g/s
- Log discharge distance, ft
- Shaping air
- Bell rpms
- Tip voltage, kV

When the results of two or more factors are to be studied, a factorial design is usually the most efficient method to use. The basic idea of factorial design is to alter several aspects of a procedure at a time, but in such a way that the effects of individual alterations may be determined. Fractional factorial designs sacrifice the ability to test for some or all interactions but are able to test for a number of main effects very efficiently.

For TE screening testing, the effect of five or six parameters needed to be evaluated. The Association of Official Analytical Chemists (AOAC) design (the 1/16 fraction of a 2^7 factorial) for examining the effects of seven variables in eight trials was selected for the third TE test, and is presented in Table 39. One or two "dummy" variables were added to complete the AOAC matrix for TE testing. (Dummy variables introduce a meaningless action, such as checking your watch prior to a test run, into the matrix. If this action is later demonstrated to be significant, it points to other difficulties with the procedure that must be addressed.)

TABLE 39. AOAC[1] SCREENING TEST DESIGN

Eight combinations of seven factors used to test the ruggedness of an analytical method

	Combination or Detn No.							
Factor Value	1	2	3	4	5	6	7	8
A or a	A	A	A	A	a	a	a	a
B or b	B	B	b	b	B	B	b	b
C or c	C	c	C	c	C	c	C	c
D or d	D	D	d	d	d	d	D	D
E or e	E	e	E	e	e	E	e	E
F or f	F	f	f	F	F	f	f	F
G or g	G	g	g	G	g	G	G	g
Observed result	s	t	u	v	w	x	y	z

A, B, C, D, E, F, G = nominal values for 7 different factors that might influence the result if their nominal values are slightly changed.

a, b, c, d, e, f, g = the alternative value of A, B, C, D, E, F, G

(1) Youden, W. J. and E. H. Steiner, "Statistical Manual of the Association of Official Analytical Chemists," AAOC, Arlington, VA, 1975.

Note: This test design does not address the interactions of the main effects to each other. For example, paint flow, although not sugnificant at the 90and 95 percent confidence level is confounded with the interactions of voltage and atomizing air or lag distance is confounded with the interactions of voltage and booth air and others.

From Table 39 it is evident that each factor can be evaluated by some combination of the eight determinations. More is presented on the data analysis later in this section.

Following the AOAC design, a test matrix was developed for each equipment type. These matrices are presented in Tables 40, 41, and 42. The performance order for each set of eight runs (for each equipment type) was randomized. This randomized set was then assigned sequential run numbers to identify the prescribed order of testing. Tables 40 through 42 show the actual values of each factor attained during the testing, as well as the resulting values of transfer efficiency for each equipment configuration.

TEST PARAMETERS

Each equipment type, HSB, AAC, and AAE, was tested according to the AOAC test design. The equipment specifications (with the exception of intentionally varied factors) are presented in Tables 43 through 49.

TEST SEQUENCE[1]

The actual test sequence was:

Monday (6/27/83)
- o Obtained platform scale
- o Set up HSB
- o Assembled targets
- o Cut and weighed foils for HSB runs
- o Set conveyor speed
- o Fabricated scavengers

Tuesday (6/28/83)
- o Completed HSB set up
- o Cut paint and documented
- o Conducted trial mass flow and spray pattern runs
- o Conducted dummy run
- o Conducted HSB 5-8

Wednesday (6/29/83)
- o Performed HSB 1-4
- o Performed AAE 1-8

Thursday (6/30/83)
- o Performed AAC 1-8
- o Performed blank/solvent run
- o Completed all weighing
- o Clean up

(1) See Table 7 for nomenclature.

TABLE 40. AIR ATOMIZED ELECTROSTATIC TEST MATRIX AND RESULTS (NORDSON)

FLAT PANEL

Factor Value	Combination No. 1	2	3	4	5	6	7	8
A = Voltage at tip, kV	60	60	60	60	45	45	45	45
B = Atomizing air, psig	50	50	30	30	50	50	30	30
C = Booth air at target, fpm	65	45	65	45	65	45	65	45
D = Paint mass flow, g/s	3.8	3.7	3.0	2.9	2.9	2.4	3.7	3.8
E = Lag discharge distance, ft	3	0	3	0	0	3	0	3
F = Shaping air, high=1, Low=0	1	0	0	1	1	0	0	1
G = Dummy one, Yes=1, No=0	1	0	0	1	0	1	1	0
TE	83.9	91.8	89.0	90.4	80.5	87.5	89.2	88.3

VERTICAL CYLINDER

Factor Value	Combination No. 1	2	3	4	5	6	7	8
A = Voltage at tip, kV	60	60	60	60	45	45	45	45
B = Atomizing air, psig	50	50	30	30	50	50	30	30
C = Booth air at target, fpm	65	45	65	45	65	45	65	45
D = Paint mass flow, g/s	3.8	3.7	3.0	2.9	2.9	2.4	3.7	3.8
E = Lag discharge distance, ft	3	0	3	0	0	3	0	3
F = Shaping air, high=1, Low=0	1	0	0	1	1	0	0	1
G = Dummy one, Yes=1, No=0	1	0	0	1	0	1	1	0
TE	21.4	23.9	28.3	36.7	21.1	17.8	26.8	30.6

TABLE 41. HIGH SPEED BELL TEST MATRIX AND RESULTS (NORDSON)

FLAT PANEL

Factor Value	Combination No. 1	2	3	4	5	6	7	8
A = Shaping air, psig at gun	40	40	40	40	30	30	30	30
B = Voltage at tip, kV	90	90	72	72	90	90	72	72
C = Paint mass flow, g/s	6.5	3.8	6.5	3.6	6.4	3.4	7.0	3.6
D = Lag discharge distance, ft	3	3	0	0	0	0	3	3
E = Booth air at target, fpm	105	80	80	50	65	105	65	67
F = Thousand rpms	11	9.3	9.2	11	11	9.3	9.3	11
G = Dummy one, Yes=1, No=0	1	0	0	1	0	1	1	0
TE	96.4	104.4	91.1	97.6	101.1	101.3	107.1	100.5

VERTICAL CYLINDER

Factor Value	Combination No. 1	2	3	4	5	6	7	8
A = Shaping air, psig at gun	40	40	40	40	30	30	30	30
B = Voltage at tip, kV	90	90	72	72	90	90	72	72
C = Paint mass flow, g/s	6.5	3.8	6.5	3.6	6.4	3.4	7.0	3.6
D = Lag discharge distance, ft	3	3	0	0	0	0	3	3
E = Booth air at target, fpm	105	80	80	50	65	105	65	67
F = Thousand rpms	11	9.3	9.2	11	11	9.3	9.3	11
G = Dummy one, Yes=1, No=0	1	0	0	1	0	1	1	0
TE	97.8	103.1	92.7	98.6	109.7	103.4	107	101.2

TABLE 42. AIR ATOMIZED CONVENTIONAL TEST MATRIX AND RESULTS (NORDSON)

FLAT PANEL

Factor Value	Combination No. 1	2	3	4	5	6	7	8
A = Atomizing Air, psig	50	50	50	50	30	30	30	30
B = Paint mass flow, g/s	6.2	6.2	1.8	2.4	6.3	6.4	3.0	2.6
C = Booth air at target, fpm	75	40	75	40	75	40	75	40
D = Lag discharge distance, ft	3	3	0	0	0	0	3	3
E = Shaping air, High=1, Low=0	1	0	1	0	0	1	0	1
F = Dummy one, Yes=1, No=0	1	0	0	1	1	0	0	1
G = Dummy two, Yes=1, No=0	1	0	0	1	0	1	1	0
TE	76.6	90.3	70.1	85.0	86.9	86.0	85.4	79.9

VERTICAL CYLINDER

Factor Value	Combination No. 1	2	3	4	5	6	7	8
A = Atomizing Air, psig	50	50	50	50	30	30	30	30
B = Paint mass flow, g/s	6.2	6.2	1.8	2.4	6.3	6.4	3.0	2.6
C = Booth air at target, fpm	75	40	75	40	75	40	75	40
D = Lag discharge distance, ft	3	3	0	0	0	0	3	3
E = Shaping air, High=1, Low=0	1	0	1	0	0	1	0	1
F = Dummy one, Yes=1, No=0	1	0	0	1	1	0	0	1
G = Dummy two, Yes=1, No=0	1	0	0	1	0	1	1	0
TE	14.7	17.4	13.3	15.3	18.3	17.2	15.9	14.8

TABLE 43. NORDSON TEST EQUIPMENT SPECIFICATIONS

A. Weight Percent Solids Measurement Equipment	
1. Laboratory Scales	
a. Manufacturer	Mettler
b. Model No.	H78AR
c. Serial No.	623434
d. Capacity, g	160
e. Rated accuracy, g	
2. Foil Dishes	
a. Type	2" dia. aluminum
b. Size	2" dia.
3. Syringe	
a. Type	Plastic
b. Capacity, ml	10
4. Solvent Type	Solvesso (paint)
B. Conveyor Speed Measurement Equipment	
1. Rule	
a. Type	NA
b. Graduations	NA
2. Electronic Timer	
a. Type	Autotron Electronic
b. Manufacturer	Autotron
c. Model No. Countomatic (Digital Display)	A579SA
d. Serial No.	364
e. Rated accuracy, s	0.01
C. Mass Flow Measurement Equipment	
1. Platform Scales	
a. Manufacturer Metrodyne (Platform)	Filina Scales-Consolidated Controls
b. Model No. SS-100	UMC2000 AAAA
c. Serial No. 100#	5521
d. Capacity, kg	45
e. Rated Accuracy, g	5
2. Stopwatch	
a. Manufacturer	Marcel & Cie
b. Model No.	--
c. Serial No.	--
d. Rated Accuracy, s	1/5
D. Target Foil	
1. Type	
2. Nominal Thickness, mils	1.5
3. Temper	Med
E. Wet Film Measurement Equipment	
a. Manufacturer	--
b. Model No.	--
F. Voltage Measuring Equipment Electrostatic	System Analyzer
a. Manufacturer	Nordson
b. Model No.	P160102B
G. Linear Air Velocity Measurement	
a. Anemometer Mfg.	Alnor
b. Model No.	8500 +1 fpm

TABLE 44. AAE PAINT SPRAY AND PERIPHERAL EQUIPMENT SPECIFICATIONS (NORDSON)

A. Paint Supply Tank	
1. Type	Pressure Pot
2. Manufacturer	Binks
3. Model No.	--
4. Serial No.	--
5. Rated Capacity, gallons	2 gal
B. Paint Spray Equipment	
1. Type	Conventional Nordson Electrostatic
2. Manufacturer	Nordson
3. Model No.	AN8A 246502B
4. Serial No.	A2K01472
5. Rated Capacity, cc/min	--
6. Air Cap	245-987
7. Fluid Tip	228(59/1000)
8. Needle	--
C. Paint Spray Booth	
1. Type	Open 10X17 ft
2. Manufacturer	--
3. Model No.	--
4. Serial No.	--
5. Rated Capacity, cfm	--
D. Conveyor	
1. Type	Overhead
2. Manufacturer	Unibuilt
3. Model No.	--
4. Serial No.	--
E. Forced Draft Oven	
1. Type	2 door 8'X10'
2. Manufacturer	Grieve Co.
3. Model No.	SC550
4. Serial No.	49037
F. Paint Heaters	
1. Type	NA
2. Manufacturer	NA
3. Model No.	NA
4. Serial No.	NA

TABLE 45. AAE EQUIPMENT OPERATING CONDITIONS (NORDSON)

A. Paint Spray Equipment	
1. Paint Pressure at Paint Pot, psig	12
2. Paint Pressure at Spray Gun, psig	--
3. Atomizing/Turbine Air Pressure at Spray Gun, psig	50
4. Operating Voltage, kV	60
5. Disk or Bell Speed, rpm	--
a. With Paint Applied	--
b. Without Paint Applied	--
6. Horn Air for Bell, psig	
7. Paint Temperature at Paint Pot, °F	74
8. Gun to Target Distance, cm	12"
9. Pump Setting	--
B. Paint Spray Booth	
1. Ambient Temperature, °F	74
2. Relative Humidity, %	61%
3. Air Flow Velocity, fpm, at plane of target	30-60 fpm
4. Air Flow, fpm, measured 4 ft in front of fan	--
5. Air Flow Direction	Normal
C. Target Parameters	
1. Average Wet Film Thickness, mils	100 microns
2. Average Dry Film Thickness	--
3. Vertical Paint Coverage, cm (in)	15"
4. Target Height, cm (in)	30"
5. % Vertical Coverage	50%
6. Resistance to Ground, Ohm	24
D. Forced Draft Oven (1)	
1. Cure Time, minutes	
a. Foil Dish (sample)	10
b. Target Foil	10
2. Cure Temperature, °F	
a. Foil Dish (sample)	350
b. Target Foil	350
E. Paint Heaters	
1. Temperature In, °F	NA
2. Temperature Out, °F	NA
F. Conveyor Speed Setpoint, fpm (cm/s)	NA

(1) Same cure schedule as foils.

TABLE 46. HSB EQUIPMENT OPERATING CONDITIONS (NORDSON)

A. Paint Spray Equipment	
1. Paint Pressure at Paint Pot, psig	--
2. Paint Pressure at Spray Gun, psig	--
3. Atomizing/Turbine Air Pressure at Spray Gun, psig	20.5
4. Operating Voltage, kV	90
5. Disk or Bell Speed, rpm	--
a. With Paint Applied	9300
b. Without Paint Applied	12700
6. Shaping Air for Bell, psig	40
7. Paint Temperature at Paint Pot, °F	74
8. Gun to Target Distance, cm	12"
9. Pump Setting	.062
B. Paint Spray Booth	
1. Ambient Temperature, °F	74
2. Relative Humidity, %	61%
3. Air Flow Velocity, fpm, at plane of target	--
4. Air Flow, fpm, measured 4 ft in front of fan	--
5. Air Flow Direction	Normal
C. Target Parameters	
1. Average Wet Film Thickness, mils	20 microns
2. Average Dry Film Thickness	--
3. Vertical Paint Coverage, cm (in)	30
4. Target Height, cm (in)	60
5. % Vertical Coverage	50%
6. Resistance to Ground, Ohm	P.452
D. Forced Draft Oven (1)	
1. Cure Time, minutes	
a. Foil Dish (sample)	10
b. Target Foil	10
2. Cure Temperature, °F	
a. Foil Dish (sample)	350
b. Target Foil	350
E. Paint Heaters	
1. Temperature In, °F	NA
2. Temperature Out, °F	NA
F. Conveyor Speed Setpoint, fpm (cm/s)	NA

(1) Same cure schedule as foils.

TABLE 47. HSB PAINT SPRAY AND PERIPHERAL EQUIPMENT SPECIFICATIONS (NORDSON)

A. Paint Supply Tank	
1. Type	2 gal STD
2. Manufacturer	Binks
3. Model No.	--
4. Serial No.	--
5. Rated Capacity, gal	2 gal
B. Paint Spray Equipment	
1. Type	Turbobell
2. Manufacturer	Ransburg
3. Model No.	--
4. Serial No.	3655 01
5. Rated Capacity, cc/min	--
6. Air Cap	20074- 12 head
7. Fluid Tip	--
8. Needle	--
C. Paint Spray Booth	
1. Type	Open Room 10X17 ft
2. Manufacturer	--
3. Model No.	--
4. Serial No.	--
5. Rated Capacity, cfm	50-80 fpm at plane of tgt.
D. Conveyor	
1. Type	Overhead-square run
2. Manufacturer	Unibuilt
3. Model No.	--
4. Serial No.	--
E. Forced Draft Oven	
1. Type	2 door 8'X10'
2. Manufacturer	Grieve Co.
3. Model No.	SC550
4. Serial No.	49037
F. Paint Heaters	
1. Type	NA
2. Manufacturer	NA
3. Model No.	NA
4. Serial No.	NA

TABLE 48. AAC EQUIPMENT OPERATING CONDITIONS (NORDSON)

A. Paint Spray Equipment	
1. Paint Pressure at Paint Pot, psig	9
2. Paint Pressure at Spray Gun, psig	--
3. Atomizing/Turbine Air Pressure at Spray Gun, psig	50
4. Operating Voltage, kV	--
5. Disk or Bell Speed, rpm	--
a. With Paint Applied	--
b. Without Paint Applied	--
6. Horn Air for Bell, psig	
7. Paint Temperature at Paint Pot, °F	85
8. Gun to Target Distance, cm	12"
9. Pump Setting	--
B. Paint Spray Booth	
1. Ambient Temperature, °F	85
2. Relative Humidity, %	65%
3. Air Flow Velocity, fpm, at plane of target	30-50
4. Air Flow, fpm, measured 4 ft in front of fan	--
5. Air Flow Direction	Normal
C. Target Parameters	
1. Average Wet Film Thickness, mils	350 microns
2. Average Dry Film Thickness	--
3. Vertical Paint Coverage, cm (in)	8
4. Target Height, cm (in)	30
5. % Vertical Coverage	--
6. Resistance to Ground, Ohm	--
D. Forced Draft Oven (1)	
1. Cure Time, minutes	
a. Foil Dish (sample)	10
b. Target Foil	10
2. Cure Temperature, °F	
a. Foil Dish (sample)	350
b. Target Foil	350
E. Paint Heaters	
1. Temperature In, °F	NA
2. Temperature Out, °F	NA
F. Conveyor Speed Setpoint, fpm (cm/s)	NA

(1) Same cure schedule as foils.

TABLE 49. AAC PAINT SPRAY AND PERIPHERAL EQUIPMENT SPECIFICATIONS (NORDSON)

A. Paint Supply Tank	
1. Type	Pressurized Std
2. Manufacturer	Binks
3. Model No.	--
4. Serial No.	--
5. Rated Capacity, gal	2 gal
B. Paint Spray Equipment	
1. Type	Air Atom.Conventional
2. Manufacturer	Binks
3. Model No.	610
4. Serial No.	56789
5. Rated Capacity, cc/min	--
6. Air Cap	63P3 or 63PB
7. Fluid Tip (Had to change fluid tip)	--
8. Needle	--
C. Paint Spray Booth	
1. Type	Open 10X17 ft
2. Manufacturer	--
3. Model No.	--
4. Serial No.	--
5. Rated Capacity, cfm	--
D. Conveyor	
1. Type	Overhead
2. Manufacturer	Unibuilt
3. Model No.	--
4. Serial No.	--
E. Forced Draft Oven	
1. Type	8'X10' Conventional
2. Manufacturer	Grieve Co.
3. Model No.	SC550
4. Serial No.	49037
F. Paint Heaters	
1. Type	NA
2. Manufacturer	NA
3. Model No.	NA
4. Serial No.	NA

Friday (7/1/83)

- o Completed clean up
- o Prepared test materials for shipment

SOLVENT-ONLY RUN

A test run was conducted using Solvesso (no paint) as the spray in order to determine if the solvent or tape were contributing any weight gain to the foils. The foils averaged a 0.001-g weight gain. This weight gain is undetectable in reported TE's calculated to tenths.

DATA ANALYSIS

During the data analysis an error was found in the recorded cured foil weights for AAE runs E and F, which happened to have been run consecutively in the randomized order. It was discovered that the cured foil weights for runs E and F were inadvertently recorded on the incorrect sheets. The following data analysis is based on the corrected weights.

Table 50 presents the analysis of the experiment. The computer printout gives the contrasts and variances associated with each factor. The contrast is the difference between the mean transfer efficiency values obtained when each factor is at its high and low values.

The variance associated with the dummy variable or variables is small in each case, as is to be expected. At least one other factor exhibits a variance similar to that exhibited by the dummy variable(s) for each experiment. Such variances were pooled with the dummy variance(s) to get an estimate of error for each experimental configuration.

Table 51 presents the results of an analysis of variance based on the variances from Table 50. The degrees of freedom associated with the error term is noted in each case. Those factors found to be significant at the 0.1 level are marked with an asterisk.

A regression equation may be written to show the manner in which transfer efficiency varies with each factor over the range tested. Regressions for each experimental configuration with the factors found to be significant as independent variables are presented in Table 52. The coefficients are simply the contrasts (1) from Table 50.

---

(1) Myers, Raymond H., Response Surface Methodology pp 47-48, 1976.

TABLE 50. SCREENING EXPERIMENT ANALYSIS
TABULATED VALUES OF VARIANCE AND
CONTRASTS

Factor	AAC -VC Variance	HSB -VC Variance	AAE -VC Variance
C	0.78125	0.10125	16.245
B	8.61125	26.28125	182.405
F	0.06125	0.15125	21.125
A	3.78125	105.85125	24.5
E	5.95125	67.86125	13.52
D	0.21125	2.76125	0.13
G	0.06125	0.00125	0.18
	Contrast	Contrast	Contrast
C	0.625	-0.225	2.85
B	-2.075	-3.625	9.55
F	-0.175	0.275	3.25
A	1.375	7.275	-3.5
E	-1.725	-5.825	-2.6
D	-0.325	1.175	-0.3
G	0.175	-0.025	0.3
	AAC -FP Variance	HSB -FP Variance	AAE -FP Variance
C	61.605	8.20125	29.645
B	47.045	5.95125	21.78
F	1.445	8.61125	25.92
A	32.805	52.53125	11.52
E	153.125	54.60125	1.28
D	2.205	37.41125	4.205
G	4.205	3.51125	0.245
	Contrast	Contrast	Contrast
C	5.55	2.025	3.85
B	-4.85	-1.725	3.3
F	-0.85	-2.075	-3.6
A	4.05	5.125	-2.4
E	-8.75	-5.225	-0.9
D	1.05	4.325	1.45
g	-1.45	-1.325	-0.35

TABLE 51. ANOVA RESULTS FOR SCREENING TEST

Source	SS	DF	MS	F
AAC-VC				
Regression				
on mean	2012.9512	1		
on A	3.78125	1	3.78125	33.99*
on B	8.61125	1	8.61125	77.40*
on C	.78125	1	.78125	7.02*
on E	5.95125	1	5.75125	53.49*
error	.33375	3	.11125	
Total	2032.41	8		
AAC-FP				
Regression				
on mean	54483.005	1		
on A	32.805	1	32.805	12.53*
on B	47.045	1	47.045	17.97*
on C	61.605	1	61.605	23.53*
on E	153.125	1	153.125	58.48*
error	7.855	3	2.618	
Total	54785.44	8		
HSB-VC				
Regression				
on mean	82722.781	1		
on A	105.85125	1	105.85125	3724.8*
on B	26.28125	1	26.28125	924.8*
on D	2.76125	1	2.76125	97.2*
on E	67.86125	1	67.86125	2388.0*
error	.25375	3	.085	
Total	82925.789	8		
HSB-FP				
Regression				
on mean	79900.031	1		
on A	52.53125	1	52.53125	8.00*
on D	37.41125	1	37.41125	5.69*
on E	54.60125	1	54.60725	8.31*
error	26.275	4	6.56875	
Total	80070.849	8		

TABLE 51. (Continued)

Source	SS	DF	MS	F
		AAE-VC		
Regression				
on mean	5335.445	1		
on A	24.5	1	24.5	136.1*
on B	182.405	1	182.405	1013.4*
on C	16.245	1	16.245	90.3*
on E	13.52	1	13.52	75.1*
on F	21.125	1	21.125	117.4*
error	.36	2	.18	
Total	5593.6	8		
		AAE-FP		
Regression				
on mean	61355.045	1		
on A	11.52	1	11.52	15.1*
on B	21.78	1	21.78	28.6*
on C	29.645	1	29.645	38.9*
on D	4.205	1	4.205	5.5
on F	25.92	1	25.92	33.9*
error	1.525	2	.7625	
Total	61449.64	8		

*Significant at .10 level

TABLE 52. REGRESSION MODELS DERIVED FROM THE SCREENING TESTS

AAC-VC

$$TE = 15.862 - \frac{1.375}{2} A + \frac{2.075}{2} B - \frac{.625}{2} C - \frac{1.725}{2} E$$

AAC-FP

$$TE = 82.525 - \frac{4.05}{2} A + \frac{4.85}{2} B - \frac{5.55}{2} C - \frac{8.75}{2} E$$

A = Atomizing air	+1 = 50 psig	-1 = 30 psig
B = Paint mass flow	+1 = 6.275	-1 = 2.45
C = Booth air at target	+1 = 75 fpm	-1 = 40 fpm
E = Shaping air	+1 = high	-1 = low

HSB-VC

$$TE = 101.6875 - \frac{7.275}{2} A + \frac{3.625}{2} B + \frac{1.175}{2} D - \frac{5.825}{2} E$$

HSB-FP

$$TE = 99.9375 - \frac{5.125}{2} A + \frac{4.325}{2} D - \frac{5.225}{2} E$$

A = Shaping air, psig at gun	+1 = 40	-1 = 30
B = Voltage at tip, kV	+1 = 90	-1 = 72
D = Lag disch. dist., ft	+1 = 3	-1 = 0
E = Air rate at target, fpm	+1 = 89.25	-1 = 65

AAE-VC

$$TE = 25.825 + \frac{3.5}{2} A - \frac{9.55}{2} B - \frac{2.85}{2} C - \frac{2.6}{2} E + \frac{3.25}{2} F$$

AAE-FP

$$TE = 87.575 + \frac{2.4}{2} A - \frac{3.3}{2} B - \frac{3.85}{2} C - \frac{3.6}{2} F$$

A = Voltage at tip, kV	+1 = 60	-1 = 45
B = Atomizing air, psig	+1 = 50	-1 = 30
C = Booth air at target, fpm	+1 = 65	-1 = 45
E = Lag disch. dist., ft	+1 = 3	-1 = 0
F = Shaping air	+1 = high	-1 = low

The differences observed between transfer efficiency results at PPG and at Ransburg for the same test configurations can now be seen to be explained by the uncontrolled variables. Table 53 presents, for each configuration, two sets of test conditions which, according to the appropriate regression, would result in transfer efficiency values similar to those actually observed at each laboratory. The values of each variable utilized in construction of Table 53 are the actual experimental values for those variables for which data was recorded.

The predicted transfer efficiency values shown in Table 53 are similar to those actually obtained during the Phase I and Phase II testing. In general, they are within one standard deviation of the observed values, where the precision of the test method has been specified as a standard deviation of 2.0.

Appendix B presents the results of a multiple linear regression computer analysis of the screening experiment, utilizing as independent variables for each regression the factors found to be significant by ANOVA (see Table 51). Actual experimental values of each factor for each experiment were used in Appendix B rather than the mean of each high and low setting as was done here.

TABLE 53. PREDICTED TRANSFER EFFICIENCY RESULTS (PPG AND RANSBURG)

	PPG	Ransburg
Air Atomized Conventional		
Independent Variable		
A - atomizing air, psig	50	51
B - paint mass flow, g/s	3.04	2.76
C - booth air at target, fpm	100	50
E - shaping air	2	0
Predicted TE		
Vertical cylinder	11.97	14.37
Flat panel	63.33	79.45
High Speed Bell		
Independent Variable		
A - shaping air, psig	35	45
B - voltage at tip, kV	80	80
D - lag distance, ft	0	5
E - booth air at target, fpm	100	50
Predicted TE		
Vertical cylinder	95.4	102.1
Flat panel	92.8	105.7
Air Atomized Electrostatic		
Independent Variable		
A - voltage at tip, kV	47	63
B - atomizing air, psig	30	10
C - booth air at target, fpm	100	50
E - lag distance, ft	0	5
F - shaping air	0	4
Predicted TE		
Vertical cylinder	24.2	46.8
Flat panel	79.7	88.0

SECTION 9

CONCLUSIONS AND RECOMMENDATIONS

The results of Phase I and Phase II testing demonstrated the viability of the draft spray painting TE method. While these tests exhibited good precision, they produced clearly different TE results. Subsequently, a third test was performed to define the factors contributing to the differences between Phase I and II results.

The following factors were determined to have a significant impact on TE for at least one type of spray equipment tested:

- Booth air rate at target, fpm
- Shaping air
- Atomizing air, psig
- Voltage at tip, kV (for electrostatic equipment)
- Paint discharge technique (lag discharge distance)
- Paint mass flow, g/s

A complete TE method must specifically address control of these factors (in addition to those already controlled) to avoid introduction of significant errors. The draft test method presented in Section 4 incorporates these findings as summarized below:

- The booth air rate at the targets should be controlled. While a certain air rate may be specified in the TE method, most laboratories do not have the capability to adjust air rates. A conservative alternative would be to set a minimum acceptable air rate for all tests.

- Shaping air pressure must be controlled. Generally shaping air is adjusted to provide a properly shaped spray. The adjustment is qualitative.

- Atomizing air pressure must be controlled.

- Tip voltage must be controlled; an adjustable power supply is strongly recommended.

- The paint discharge technique must be standardized to provide identical opportunity for paint to adhere for each run.

- The paint mass flow rate must be controlled for air atomized equipment.

The following changes are also recommended in the draft TE procedure to provide a more precise, simpler test performance:

- The test panels and cylinders can be mounted in a less complex manner, provided dimensions and materials are consistent with the original targets.

- A single source of paint should be used for each series of tests.

- The same oven and timer should be used for all curing.

- Plastic syringes are acceptable for use in weight percent solids determination.

- All pressure gages should be calibrated before performing tests.

It is essential to control all previously listed factors to the same level for verification testing of the draft TE method.

The draft test method arrived at through development and screening tests as described in this report is now ready to be subjected to a systematic program of interlaboratory testing. Such a program will enable the determination of the reproducibility component of precision. It is recommended that an interlaboratory test program including from 6 to 10 laboratories be undertaken, using as a basis the draft test method developed here.

BIBLIOGRAPHY

Air Pollution Control Board of the State of Indiana, VOC Regulations-General Provisions, Section 325 IAC 8-1.1.

Aldorfer, D.M. A Report on Transfer Efficiency of Waterborne Enamel, Preliminary Results. Warren, Michigan: General Motors Technical Center, Fisher Body Division, April 24, 1979.

Antonelli, J. A. "Liquid High Solids-Organic Coatings," Society of Manufacturing Engineers, 1974 Technical Paper FC74-654.

Brewer, G.E.F. "Calculations of Painting Wasteloads Associated with Metal Finishing," for Industrial Environmental Research Laboratory, Cincinnati, EPA-600/2-80-144, June 1980.

Brewer, G.E.F. "Mathematics of Emissions and Transfer Efficiency," U. S. Environmental Protection Agency Seminar on Volatile Organic Compound Control in Surface Coating Industries. Brighton, Michigan: George E.F. Brewer Coating Consultants, 1979.

Bublick, Timothy "Robots for Spray Finishing," Plating and Surface Finishing, November 1980, V. 67, No. 11, PSFMDH 67.

Chapman, G.R. "High Solids Coatings," 1982 Products Finishing Directory, September 1981, V. 45, No. 12A.

DeVilbiss Company, "The ABC's of Spray Equipment," Third Edition, Toledo, Ohio., 1954.

Drum, E.W. Letter to Dave Salman, U. S. Environmental Protection Agency, Research Triangle Park, N.C.. Indianapolis: Ransburg Electrostatic Equipment, A Division of Ransburg Corporation, October 31, 1978.

Farrell, Ron "Powder Coatings," 1982 Products Finishing Directory, September 1981, V. 45, No. 12A.

General Motors Corporation. GMAD Oklahoma City, Oklahoma Transfer Efficiency Experiments. Warren, Michigan: General Motors Technical Center, Fisher Body Division, December 13, 1979.

-----. Baseline Transfer Efficiency of Waterborne Enamel Topcoat, Warren, Michigan: General Motors Technical Center, Fisher Body Division, October 1, 1979.

Godovoy, A. "Deposition Efficiency in Electrostatic Spraying of Powder Coating." Journal of Paint Technology, Vol. 15 No. 580. May 1973.

Gunsel, S.J. Letter (SG-51) to Central Docket Section (A-130), U. S. Environmental Protection Agency, Washington, DC. Amherst, Ohio: Nordson Corporation, February 19, 1981.

Harding, S.K. Trip Report--April 19-21, 1982. Ft. Lauderdale, Florida: CENTEC Corporation.

Health and Human Services, U. S. Department of. An Evaluation of Engineering Control Technology for Spray Painting, NIOSH Technical Report, Publication No. 81-121. Washington, DC: U. S. Government Printing Office, June 1981.

Hungerford, A.O. Transfer Efficiencies of Painting Method, A Case History. Galesburg, Illinois: Butler Manufacturing Company, March 1, 1982.

Industrial Finishing, October 1978, Part Two.

Industrial Finishing, August 1982, page 43.

Industrial Finishing, February 1982, pages 9, 10, 16.

McCrodden, B.J. Final Trip Report -- Ransburg Corporation. Research Triangle Park, N.C.: Research Triangle Institute, June 19, 1980.

Metal Finishing, January 1980, page 112.

Metal Finishing Annual Review Issue, February 1981, February 1982, and April 1982.

Miller, E.P. "Powder Coating Compared with Other Techniques Available for Meeting OSHA and EPA Regulations," Society of Manufacturing Engineers, 1973 Technical Paper, FC73-553.

Myers, Raymond H. Response Surface Methodology, 1976.

Nickerson, R.S. "Applying High Solids Coatings," Products Finishing, November 1981, pages 81-88.

Plating and Surface Finishing, "EPA Reveals New Policy on Hydrocarbon Emissions," No date.

Powell, G. and Bussjaeger, S. "Water-bourne Coatings," 1982 Products Finishing Directory, September 1981, V. 45, No. 12A.

Product Source Listings, 1982 Product Finishing Directory, September 1981, V. 45, No. 12A.

Roobol, N.R. "Focus on Automotive Coatings," Metal Finishing, September 1980, pages 31-35.

Scarbrough, D. "Electrostatic Spray Coating . . . Focus on Profitability," Finishers' Management, March 1981.

Sloan, E.M. Trip Report -- GMAD - Fremont, California Transfer Efficiency Experiments. Warren, Michigan: General Motors Technical Center, Fisher Body Division, April, 1980.

-----. Vehicle Paint Transfer Efficiency Test -- A New Tool to Compare Solvent Emissions (GMMD - 79-065), SME Paper No. FC80-610. Dearborn, Michigan: Association for Finishing Processes, Society of Manufacturing Engineers, 1980.

Tanable, Y. Feasibility Study for Base Coat/Clear Coat Painting System Using New High Solid Paints. Marysville, Ohio: Honda of America Manufacturing, Inc., n.d.

U. S. Department of Health and Human Services, "An Evaluation of Engineering Control Technology for Spray Painting," June 1981.

U. S. Environmental Protection Agency, "Industrial Surface Coating Appliances-Background Information for Proposed Standards," Office of Air Quality Planning and Standards, November 1980, EPA-450/3-80-037a (NTIS PB 82-152174).

U. S. Environmental Protection Agency, "Standards of Performance for New Stationary Sources: Industrial Surface Coating: Appliances," Proposed Rule and Notice of Public Hearing, Federal Register, V. 45, No. 249, December 24, 1980.

U. S. Environmental Protection Agency, "Standards of Performance for New Stationary Sources: Industrial Surface Coating: Appliances," Correction, Federal Register, V. 46, No. 18, January 28, 1981.

U. S. Environmental Protection Agency, "Standards of Performance for New Stationary Sources: Industrial Surface Coating: Appliances, Correction," Federal Register, V. 46, No. 107, June 4, 1981.

U. S. Environmental Protection Agency, "Measurement of Volatile Organic Compounds," Office of Air Quality Planning and Standards 1979, EPA-450/2-78-041 (NTIS PB80-221674).

Walberg, A.C. "Painting Efficiency of Automatic Electrostatic Systems," A paper presented at Chemical Coaters Association Meeting, June 12-14, 1979.

Welch, R.A. "Cyrogenic Paint Stripping," Industrial Finishing, May 1984.

Youden, W.J. and E.H. Steiner. "Statistical Manual of the Association of Official Analytical Chemists," AAOC, Arlington, VA, 1975.

Ziegeweid, J.E. "Applying Organic Coatings, Tools of the Trade," Metal Finishing, October 1980, pages 57-61.

Ziegeweid, J.E. "Applying Organic Coatings -- Airless Comes of Age," Metal Finishing, June 1981, pages 37-41.

APPENDIX A

WORTH ASSESSMENT MODEL OF TE TEST METHODS

Nine TE test methods were evaluated according to the following criteria:

1. How representative is the test method expected to be of actual line TE's?

   1.0 Identical
   0.8 Very close
   0.5 Defines range of TE's
   0.3 Poor
   0.0 Very poor

2. How complex will the procedure be to perform?

   1.0 Easy
   0.8 Fairly easy
   0.5 Moderate
   0.3 Fairly difficult
   0.0 Difficult

3. How precise is the method expected to be?

   1.0 Excellent
   0.8 Very good
   0.5 Fair
   0.3 Poor
   0.0 Very poor

4. How expensive will the method be to perform?

   1.0 Little expense involved
   0.8 Operating expense only
   0.5 Little operating and capital expense
   0.3 Moderate capital and operating expense
   0.0 Substantial capital and operating expense

5. Does the method bias against certain equipment manufacturers?

   1.0 None
   0.8 Little
   0.5 Moderate
   0.3 Substantial
   0.0 Severe

6. Does the method bias against certain target geometries?

   1.0 None
   0.8 Little
   0.5 Moderate
   0.3 Substantial
   0.0 Severe

7. How well developed is the method? (How much more work will be required for a final method?)

   1.0 Ready for use
   0.8 Ready for verification testing
   0.5 Needs some development
   0.3 Needs much development
   0.0 Develop from scratch

8. How much process modification is required to use the method?

   1.0 None
   0.8 Little
   0.5 Moderate
   0.3 Substantial
   0.0 Severe

9. Are there special limitations or restrictions to the method which must be considered?

   1.0 None
   0.8 Little
   0.5 Moderate
   0.3 Substantial
   0.0 Severe

Each criteria was weighed according to its relative importance as shown:

Criteria	Weighting
1 Representation	0.20
2 Complexity	0.09
3 Precision	0.15
4 Expense	0.08
5 Mfg. Bias	0.12
6 Tgt. Bias	0.11
7 Level of Dev.	0.07
8 Process Mod.	0.08
9 Restrictions	0.10

Each TE test method is described by a three section descriptor:

AAA/BBB/CCC

where

AAA = plant method or laboratory method

BBB = target type; actual workpiece (opr) target, standardized targets, or shim

CCC = test parameters; actual operating (line) conditions, standardized spray conditions

The relative rankings of the methods are shown in Table A-1.

The individual components of the assessment follow in computer print-out form.

Table A-1

TEST METHOD ALTERNATIVES

METHOD TYPE	TARGET TYPE	TEST PARAMETERS	SCORE
PLANT	WORKPIECE	ACTUAL OPERATING	72.5
LAB	WORKPIECE	ACTUAL OPERATING	71.5
LAB	STANDARD	ACTUAL OPERATING	67.3
LAB	STANDARD	STANDARD	61.8
LAB	WORKPIECE	STANDARD	60.8
PLANT	STANDARD	ACTUAL OPERATING	60.3
LAB	SHIM	ACTUAL OPERATING	58.0
LAB	SHIM	STANDARD	53.0
PLANT	SHIM	ACTUAL OPERATING	48.3

8	PLANT/OPR TGT/OPR COND	.725
3	LAB/OPR TGT/OPR COND	.715
2	LAB/STD TGT/OPR COND	.6725
1	LAB/STD TGT/STD COND	.6175
5	LAB/OPR TGT/STD COND	.6075
7	PLAN/STD TGTS/OPR COND	.6025
4	LAB/SHIM/OPR COND	.58
6	LAB/SHIM/STD COND	.58
9	PLANT/SHIM/OPR COND	.4825

(1) LAB/STD TGT/STD COND

#	FACTOR NAME	VALUE	SELECTION DESCRIPTION	WEIGHT	Y/N	# VALUE
1	REPRESENTATION	0.3	POOR	0.200	YES	0.05000
2	COMPLEXITY	0.8	FAIRLY EASY	0.090	YES	0.06750
3	PRECISION	1.0	EXCELLENT	0.150	YES	0.15000
4	EXPENSE	0.8	OPR ONLY	0.080	YES	0.06000
5	MFG BIAS	0.3	SUBSTANTIAL	0.120	YES	0.03000
6	TGT BIAS	0.3	SUBSTANTIAL	0.110	YES	0.02750
7	LEVEL OF DEV	0.8	READY FOR VERIF	0.070	YES	0.05250
8	PROCESS MOD	1.0	NONE	0.080	YES	0.08000
9	RESTRICTIONS	1.0	NONE	0.100	YES	0.10000
TOTAL						0.61750

(2) LAB/STD TGT/OPR COND

#	FACTOR NAME	VALUE	SELECTION DESCRIPTION	WEIGHT	Y/N	# VALUE
1	REPRESENTATION	0.5	DEFINES RANGE	0.200	YES	0.10000
2	COMPLEXITY	0.8	FAIRLY EASY	0.090	YES	0.06750
3	PRECISION	1.0	EXCELLENT	0.150	YES	0.15000
4	EXPENSE	0.8	OPR ONLY	0.080	YES	0.06000
5	MFG BIAS	0.5	MODERATE	0.120	YES	0.06000
6	TGT BIAS	0.3	SUBSTANTIAL	0.110	YES	0.02750
7	LEVEL OF DEV	0.8	READY FOR VERIF	0.070	YES	0.05250
8	PROCESS MOD	1.0	NONE	0.080	YES	0.08000
9	RESTRICTIONS	0.8	LITTLE	0.100	YES	0.07500
TOTAL						0.67250

(3) LAB/OPR TGT/OPR COND

#	FACTOR NAME	VALUE	SELECTION DESCRIPTION	WEIGHT	Y/N	# VALUE
1	REPRESENTATION	0.8	VERY CLOSE	0.200	YES	0.15000
2	COMPLEXITY	0.8	FAIRLY EASY	0.090	YES	0.06750
3	PRECISION	0.5	FAIR	0.150	YES	0.07500
4	EXPENSE	0.8	OPR ONLY	0.080	YES	0.06000
5	MFG BIAS	0.8	LITTLE	0.120	YES	0.09000
6	TGT BIAS	0.8	LITTLE	0.110	YES	0.08250
7	LEVEL OF DEV	0.5	NEEDS DEV	0.070	YES	0.03500
8	PROCESS MOD	1.0	NONE	0.080	YES	0.08000
9	RESTRICTIONS	0.8	LITTLE	0.100	YES	0.07500
TOTAL						0.71500

(4) LAB/SHIM/OPR COND

#	FACTOR NAME	VALUE	SELECTION DESCRIPTION	WEIGHT	Y/N	# VALUE
1	REPRESENTATION	0.5	DEFINES RANGE	0.200	YES	0.10000
2	COMPLEXITY	0.8	FAIRLY EASY	0.090	YES	0.06750
3	PRECISION	0.5	FAIR	0.150	YES	0.07500
4	EXPENSE	0.8	OPR ONLY	0.080	YES	0.06000
5	MFG BIAS	0.5	MODERATE	0.120	YES	0.06000
6	TGT BIAS	0.3	SUBSTANTIAL	0.110	YES	0.02750
7	LEVEL OF DEV	0.5	NEEDS DEV	0.070	YES	0.03500
8	PROCESS MOD	1.0	NONE	0.080	YES	0.08000
9	RESTRICTIONS	0.8	LITTLE	0.100	YES	0.07500
TOTAL						0.58000

(5) LAB/OPR TGT/STD COND

#	FACTOR NAME	VALUE	SELECTION DESCRIPTION	WEIGHT	Y/N	# VALUE
1	REPRESENTATION	0.5	DEFINES RANGE	0.200	YES	0.10000
2	COMPLEXITY	0.8	FAIRLY EASY	0.090	YES	0.06750
3	PRECISION	0.5	FAIR	0.150	YES	0.07500
4	EXPENSE	0.8	OPR ONLY	0.080	YES	0.06000
5	MFG BIAS	0.5	MODERATE	0.120	YES	0.06000
6	TGT BIAS	0.5	MODERATE	0.110	YES	0.05500
7	LEVEL OF DEV	0.5	NEEDS DEV	0.070	YES	0.03500
8	PROCESS MOD	1.0	NONE	0.080	YES	0.08000
9	RESTRICTIONS	0.8	LITTLE	0.100	YES	0.07500
TOTAL						0.60750

(6) LAB/SHIM/STD COND

#	FACTOR NAME	VALUE	SELECTION DESCRIPTION	WEIGHT	Y/N	# VALUE
1	REPRESENTATION	0.5	POOR	0.200	YES	0.05000
2	COMPLEXITY	0.8	FAIRLY EASY	0.090	YES	0.06750
3	PRECISION	0.5	FAIR	0.150	YES	0.07500
4	EXPENSE	0.8	OPR ONLY	0.080	YES	0.06000
5	MFG BIAS	0.5	MODERATE	0.120	YES	0.06000
6	TGT BIAS	0.3	SUBSTANTIAL	0.110	YES	0.02750
7	LEVEL OF DEV	0.5	NEEDS DEV	0.070	YES	0.03500
8	PROCESS MOD	1.0	NONE	0.080	YES	0.08000
9	RESTRICTIONS	0.8	LITTLE	0.100	YES	0.07500
TOTAL						0.53000

(7) PLANT/STD TGTS/OPR COND

#	FACTOR NAME	VALUE	SELECTION DESCRIPTION	WEIGHT	Y/N	# VALUE
1	REPRESENTATION	0 5	DEFINES RANGE	0 200	YES	0 10000
2	COMPLEXITY	0 8	FAIRLY EASY	0 090	YES	0 06750
3	PRECISION	1 0	EXCELLENT	0.150	YES	0 15000
4	EXPENSE	0.5	LITTLE CAP&OPR	0 080	YES	0 04000
5	MFG BIAS	0.5	MODERATE	0 120	YES	0 06000
6	TGT BIAS	0 5	MODERATE	0 110	YES	0 05500
7	LEVEL OF DEV	0.5	NEEDS DEV	0 070	YES	0 03500
8	PROCESS MOD	0.3	SUBSTANTIAL	0.080	YES	0 02000
9	RESTRICTIONS	0.8	LITTLE	0 100	YES	0 07500
TOTAL						0 60250

(8) PLANT/OPR TGT/OPR COND

#	FACTOR NAME	VALUE	SELECTION DESCRIPTION	WEIGHT	Y/N	# VALUE
1	REPRESENTATION	1 0	IDENTICAL	0 200	YES	0 20000
2	COMPLEXITY	0.8	FAIRLY EASY	0 090	YES	0 06750
3	PRECISION	0.5	FAIR	0 150	YES	0 07500
4	EXPENSE	0 5	LITTLE CAP&OPR	0 080	YES	0 04000
5	MFG BIAS	1.0	NONE	0 120	YES	0 12000
6	TGT BIAS	1 0	NONE	0.110	YES	0 11000
7	LEVEL OF DEV	0 3	NEEDS MUCH DEV	0.070	YES	0 01750
8	PROCESS MOD	0.3	SUBSTANTIAL	0.080	YES	0 02000
9	RESTRICTIONS	0.8	LITTLE	0.100	YES	0 07500
TOTAL						0 72500

(9) PLANT/SHIM/OPR COND

#	FACTOR NAME	VALUE	SELECTION DESCRIPTION	WEIGHT	Y/N	# VALUE
1	REPRESENTATION	0 5	DEFINES RANGE	0 200	YES	0 10000
2	COMPLEXITY	0 8	FAIRLY EASY	0.090	YES	0.06750
3	PRECISION	0.5	FAIR	0 150	YES	0 07500
4	EXPENSE	0 5	LITTLE CAP&OPR	0 080	YES	0 04000
5	MFG BIAS	0 5	MODERATE	0.120	YES	0.06000
6	TGT BIAS	0.3	SUBSTANTIAL	0.110	YES	0 02750
7	LEVEL OF DEV	0.3	NEEDS MUCH DEV	0 070	YES	0.01750
8	PROCESS MOD	0.3	SUBSTANTIAL	0 080	YES	0 02000
9	RESTRICTIONS	0 8	LITTLE	0.100	YES	0 07500
TOTAL						0 48250

APPENDIX B

SCREENING PROCEDURE
MULTIPLE LINEAR REGRESSION FOR TRANSFER EFFICIENCY

The regressions presented in Section 8 of this report were derived from the contrasts associated with the independent variables. Only those independent variables found to be significant based on an analysis of variance were included. The resulting regression coefficients were based on normalized values of the experimental factor levels, 1 = the high value and -1 = the low value.

This appendix presents nearly equivalent regression expressions derived from a conventional multiple linear regression program. Again, only independent variables found to be significant by ANOVA are included. Whereas the Section 8 analysis considered each factor to have taken on only two values (the mean of the four actual high values and the mean of the four actual low values), the analysis presented here used the actual experimental data in every case. Differences are slight because, for the most part, the planned high and low values of each factor were actually achieved.

Results are presented in Table B-1.

Table B-1

SCREENING PROCEDURE--MULTIPLE LINEAR REGRESSION

Air Atomized Electrostatic

	Vertical Cylinder		Flat Plate	
Means	52.5	xA		
	40.0	xB		
	55.	xC		
	1.5	xE	52.5	xA
	0.5	xF	40.	xB
Standard Deviations	6.072831771	SO	55.	xC
	.5345224838	S5	0.5	xF
	1.603567451	S4	3.676080988	SO
	10.69044968	S3	.5345224889	S4
	10.69044968	S2	10.69044968	S3
	8.017837257	S1	10.69044968	S2
Correlation Coefficients	.3080652921	RO1	8.017837257	S1
	-.8405781542	RO2	.3489732586	RO1
	-.2508531664	RO3	-.4798382306	RO2
	-.2288485027	RO4	-0.559811269	RO3
	.2860606284	RO5	-.5234598879	RO4
Determinant of the Correlation Matrix Inverse	1.		1.	
Beta Coefficients	.3080652921	B1	.3489732586	B1
	-.8405781542	B2	-.4798382306	B2
	-.2508531664	B3	-0.559811269	B3
	-.2288485027	B4	-.5234598879	B4
	.2860606284	B5		
			0.16	B1
Regression Coefficients	.2333333333	B1	-0.165	B2
	-0.4775	B2	-0.1925	B3
	-0.1425	B3	-3.6	B4
	-.8666666667	B4	98.1625	BO
	3.25	B5		
Intercept	40.1875	BO		
			2.455893648	T1
			-3.376853767	T2
t Statistic	11.66666666	T1	-3.939662728	T3
	-31.83333331	T2	-3.683840473	T4
	-9.499999992	T3	20.37178647	TO
	-8.666666659	T4		
	10.83333332	T5		
	27.02921615	TO	.9394259739	R3
			1.382027496	SE
	.9986054889	R2		
Standard Error	.4242640691	SE		

0 = Transfer Efficiency
1 = A Voltage
2 = B Atomizing Air
3 = C Booth Air
4 = E Lag Distance
5 = F Shaping Air

0 = Transfer Efficiency
1 = A Voltage
2 = B Atomizing Air
3 = C Booth Air
4 = F Shaping Air

Table B-1 (continued)

Air Atomized Conventional

	Vertical Cylinder		Flat Plate	
Means	40.	xA	40.	xA
	4.3625	xB	4.3625	xB
	57.5	xC	57.5	xC
	0.5	xE	0.5	xE
Standard Deviations	1.667279649	S0	6.573051042	S0
	.5345224838	S4	.5345224838	S4
	18.70828693	S3	18.70828693	S3
	2.071533249	S2	2.071533249	S2
	10.69044968	S1	10.69044968	S1
Correlation Coefficients	-.4408189206	RO1	-.3293472157	RO1
	.7291604789	RO2	.4894084014	RO2
	-.2003722366	RO3	-0.451327666	RO3
	-.5530273731	RO4	-.7115526266	RO4
Determinant of the Correlation Matrix Inverse	.9842287046		.9842287046	
Beta Coefficients	-.3689709194	B1	-.2844171654	B1
	.6551665119	B2	.4097074919	B2
	-.1876931776	B3	-.4433988336	B3
	-0.514990196	B4	-.6877661293	B4
Regression Coefficients	-.0575446051	B1	-.1748746406	B1
	.5273127008	B2	1.300016912	B2
	-.0167271871	B3	-0.155785678	B3
	-1.606354642	B4	-8.457496195	B4
Intercept	17.62887312	B0	97.03508643	B0
t Statistic	-3.292647716	T1	-3.833560108	T1
	5.835660816	T2	5.511954203	T2
	-1.684830484	T3	-6.011676679	T3
	-4.615799271	T4	-9.310694592	T4
	16.72299965	T0	35.26575728	T0
	0.962783067	R^3	.9836862467	R^3
Standard Error	.4913230418	SE	1.282426085	SE

0 = Transfer Efficiency
1 = A Atomizing Air
2 = B Paint Mass Flow
3 = C Booth Air
4 = E Shaping Air

TECHNICAL REPORT DATA
(Please read Instructions on the reverse before completing)

1. REPORT NO. EPA-600/2-88-026a	2.	3. RECIPIENT'S ACCESSION NO.
4. TITLE AND SUBTITLE Development of Proposed Standard Test Method for Spray Painting Transfer Efficiency; Volume I. Laboratory Development		5. REPORT DATE April 1988
		6. PERFORMING ORGANIZATION CODE
7. AUTHOR(S) K. C. Kennedy		8. PERFORMING ORGANIZATION REPORT NO.
9. PERFORMING ORGANIZATION NAME AND ADDRESS Centec Corporation, 11260 Roger Bacon Drive, Reston, Virginia 22090		10. PROGRAM ELEMENT NO.
		11. CONTRACT/GRANT NO. 68-03-1721, Task 2
12. SPONSORING AGENCY NAME AND ADDRESS EPA, Office of Research and Development, Air and Energy Engineering Research Laboratory, Research Triangle Park, NC 27711		13. TYPE OF REPORT AND PERIOD COVERED Final; 1/82 - 1/87
		14. SPONSORING AGENCY CODE EPA/600/13

15. SUPPLEMENTARY NOTES AEERL project officer is Charles H. Darvin, Mail Drop 62b, 919/541-7633. Volume II describes the verification program.

16. ABSTRACT

The two-volume report gives results of a program to develop and verify a standardized spray-painting transfer-efficiency test method. Both review of the literature and laboratory research were conducted. Transfer efficiency measurement methods presently used by industry were evaluated and compared. The best characteristics of these methods were incorporated into the final proposed standard method. The resulting method was determined to be viable for laboratory evaluations. It still awaits adaptation and verification for production line applications.

17. KEY WORDS AND DOCUMENT ANALYSIS

a. DESCRIPTORS	b. IDENTIFIERS/OPEN ENDED TERMS	c. COSATI Field/Group
Pollution	Pollution Control	13B
Spray Painting	Stationary Sources	13H
Tests	Transfer Efficiency	14B

18. DISTRIBUTION STATEMENT Release to Public	19. SECURITY CLASS (This Report) Unclassified	21. NO. OF PAGES 150
	20. SECURITY CLASS (This page) Unclassified	22. PRICE

EPA Form 2220-1 (9-73)