EPA-460/3-74-011A

October 1975

A STUDY OF STRATIFIED CHARGE FOR LIGHT DUTY POWER PLANTS

Volume 2

U.S. ENVIRONMENTAL PROTECTION AGENCY
Office of Air and Waste Management
Office of Mobile Source Air Pollution Control
Emission Control Technology Division
Ann Arbor, Michigan 48105

This report is issued by the Environmental Protection Agency to report technical data of interest to a limited number of readers. Copies are available free of charge to Federal employees, current contractors and grantees, and non-profit organizations - as supplies permit - from the Air Pollution Technical Information Center, Environmental Protection Agency, Research Triangle Park, North Carolina 27711; or, for a fee, from the National Technical Information Service, 5285 Port Royal Road, Springfield, Virginia 22151.

This report was furnished to the Environmental Protection Agency by Ricardo and Company Engineers (1927) Ltd., in fulfilment of Contract No. 68-03-0375. The contents of this report are reproduced herein as received from Ricardo and Company Engineers (1927) Ltd. The opinions, findings, and conclusions expressed are those of the authors and not necessarily those of the Environmental Protection Agency. Mention of company or product names is not to be considered as an endorsement by the Environmental Protection Agency.

Publication No. EPA-460/3-74-011

EPA-460/374-011A

A STUDY OF STRATIFIED CHARGE FOR LIGHT DUTY POWER PLANTS

VOLUME 2

by

RICARDO AND COMPANY ENGINEERS (1927) LTD
BRIDGE WORKS,
SHOREHAM-BY-SEA, SUSSEX, BN4 5FG

CONTRACT NO. 68-03-0375

EPA PROJECT OFFICES

T.C. AUSTIN AND J.J. MCFADDEN

PREPARED FOR

U.S. ENVIRONMENTAL PROTECTION AGENCY
OFFICE OF AIR AND WASTE MANAGEMENT
OFFICE OF MOBILE SOURCE AIR POLLUTION CONTROL
EMISSION CONTROL TECHNOLOGY DIVISION
ANN ARBOR, MICHIGAN 48105

October 1975

ABSTRACT

The objectives of this project were to determine the acceptability of various types of stratified charge engines as potential power plants for light duty vehicles and motorcycles in America. The light duty vehicle considered was a 4/5 seat compact sedan with good acceleration capabilities and exhaust emissions below a primary target of 0.41 g/mile HC, 3.4 g/mile CO, 1.5 g/mile NO_x. A secondary target of 0.41 g/mile HC, 3.4 g/mile CO and 0.4 g/mile NO_x was also considered.

A literature survey was undertaken, comparing stratified charge engines with examples of good conventional gasoline and diesel engines. While some stratified charge engines had exhaust emission or fuel economy advantages, there were always sacrifices in other areas.

Eleven engines were configured, four of which were specifically directed towards the secondary emission targets. A method of rating the engines was derived, and the design concepts were compared with two gasoline engines by a jury panel. The overall result was that the Ford PROCO and Honda CVCC combustion processes were serious contenders to the gasoline engine at the primary emission target, and that both of these systems, together with the VW combustion process, might be suitable at the secondary targets.

This section of the report covers the engine configuration study and power plant rating, as well as the overall conclusions and recommendations from the complete project.

A STUDY OF STRATIFIED CHARGE FOR LIGHT DUTY POWER PLANTS

SECTION G

ENGINE CONFIGURATION STUDY

SUMMARY

This section contains details of the stratified charge gasoline engine configurations which were schemed as potentially viable light duty power plants. Information on two conventional gasoline power plants is also included for comparison.

The stratified charge power plants were all designed to propel the target vehicle for the study, a 4-5 seat sedan with a maximum curb weight of 1600 kg (3500 lb) capable of 0-96 km/h (0-60 mph) in 13.5 s and 40-112 km/h (25-75 mph) in 15 s. Computer calculations indicated that a bare engine power of about 96 KW (128 bhp) was required if a conventional 3-speed automatic transmission was used.

The range of engine configurations presented for each of the seven stratified charge categories was largely dictated by the combustion limitations of each category. In general, the configurations were schemed using combustion layouts which have been proven and for which published performance results could be used, in order that the performance of the proposed power plants could be predicted.

The following engines were configurated, in order to achieve the primary emission target (HC 0.41 g/mile, CO 3.4 g/mile, NO_x 1.5 g/mile) and also the secondary emission target (HC 0.41 g/mile, CO 3.4 g/mile, NO_x 0.4 g/mile):-

Category 1

Primary Emission Target

(1) V-8, 4.12 l, PROCO combustion system

(2) Inline 6, 4.16 l, PROCO combustion system

Secondary Emission Target

(3) V-8, 5.25 l, PROCO combustion system.

Category 2

Primary Emission Target

(1) V-8, 5.4 l, TCCS combustion system

(2) V-8, 4.16 l, Turbocharged TCCS combustion system

(3) 2 Bank, Rotary, 5.5 l, Curtiss-Wright combustion system

Secondary Emission Target

(4) V-8, 5.87 l, Turbocharged, TCCS combustion system

Category 3

Primary Emission Target

(1) V-7, 5.06 l, MAN-FM combustion system

Category 4

Primary Emission Target

(1) V-8, 3.67 l, VW combustion system

Secondary Emission Target

(2) As above

Category 5

Primary Emission Target

(1) V-8, 4.26 l, CVCC combustion system

Secondary Emission Target

(2) V-8, 5.58 l, CVSS combustion system

Category 6

No configurations

Category 7

No configurations

Drawings and performance curves were prepared for all the above engines, each configuration being schemed in sufficient detail to allow a reliable assessment of its potential. The in-vehicle characteristics of the power plant, i.e. emissions, fuel consumption and noise, were estimated on the basis of previous engine performance in cars and on test beds, of each combustion system.

ENGINE CONFIGURATION STUDY

INTRODUCTION

The literature survey gives a preliminary and overall comparative analysis of the potential of each category of stratified charge engine as a light duty power plant. The aim of this configuration study is to enable a quantitative assessment to be made of all the characteristics of those stratified charge engines which were considered feasible as light duty power plants. This is achieved by scheming the engines specifically for a particular vehicle and emissions environment.

Definition of Vehicle

The vehicle selected for this study was a passenger car (typically a 4/5 seat sedan) with a maximum test inertia of 1600 kg (3500 lb) when loaded and capable of meeting the EPA standard car performance specifications, i.e. 0-97 km/h (0-60 mph) in less than 13.5 s, 40-112 km/h (25-70 mph) in less than 15 s, and capable of overtaking an 80 km/h (50 mph) truck in less than 15 s.

To assist in the definition of the power plant a computer program was written to allow the maximum power output of the engine, the shape of its torque curve and the transmission system necessary to achieve these acceleration capabilities to be calculated.

Use of this program showed that with a three-speed automatic gearbox and with the final drive ratios selected to give approximately 136 km/h (85 mph) at the rated engine speed, a bare engine power of 96 KW (128 bhp) was required to satisfy the acceleration target. This implies that the vehicle has acceleration "in hand" at this rated speed and thus a non-speed limited engine will permit maximum speeds on level roads to be greater than this nominal figure. Various gear ratios and amounts of torque back-up were tried and the minimum power plant requirements were finally selected as:-

Rated Speed	96 KW	128 bhp
.75 Rated Speed	76 KW	102 bhp
.50 Rated Speed	53 KW	71 bhp
.25 Rated Speed	17 KW	22.7 bhp

The detailed shape of the torque curve which is dependent on the particular characteristics of each stratified engine variant is not a critical factor in achieving the above performance requirements.

Target Emissions

For the purposes of this study two target emission levels were envisaged. These were:-

Primary (or short term)

HC	0.41 g/mile
CO	3.4 g/mile
NO_x	1.5 g/mile

Secondary (or long term)

HC	0.41 g/mile
CO	3.4 g/mile
NO_x	0.4 g/mile

The above levels were selected essentially as the proposed 'interim' Federal emissions levels and the statutory 'final' limits as prescribed under the Clean Air Act.

Configuration Notes

Each configured engine is described by a separate specification and performance table followed by notes on

(a) the predicted performance characteristics of the engine, and

(b) design notes which make reference to the performance curves and design schemes included in the text.

At the end of the Configuration Study a Summary Table is shown which allows an overall comparison to be made of all the engine configurations. The Summary Table also includes details of the gasoline and diesel I.D.I. engines.

The following considerations were taken into account when estimating the performance levels of each engine/vehicle:-

(1) Any emission control system should be able to operate for 50,000 miles or at least 25,000 miles with little maintenance in order to warrant practical consideration. Factors such as the physical integrity of the specialised exhaust system, spark plug life, deterioration of the catalysts, thermal reactors and EGR system have been considered when predicting the emission durability of each engine configuration.

(2) In the summary table, the engine baseline HC and CO exhaust emissions are presented as well as controlled levels. Because of the different exhaust flow rates, exhaust temperatures and engine baseline emissions each category of stratified charge engine requires a different method of exhaust oxidation treatment, the severity of which generally increases with the baseline emission level. The baseline HC and CO emissions have included the effects of EGR where fitted, therefore no baseline NO_x emissions are quoted.

Exhaust emissions were estimated by consideration of the performance of each combustion system in vehicles and from test bed results.

(3) In the case of those engines which have a smoke limited performance, the torque curves are restricted to give smoke levels ranging from approximately 7% opacity at low speed to 2½% opacity at the rated speed. It is felt that smoke levels higher than these would be totally unacceptable for a passenger car engine.

(4) Prediction of the fuel consumption on the CVS-CH test cycle for each engine configuration was based on the results from a range of test engines and vehicles uncovered by the literature survey. Published data was usually too sparse to allow a more thorough comparison to be made between the stratified charge variants. However, the CVS-CH test comparison is now accepted as

reflecting the true differences between systems since the cycle simulates typical urban driving conditions. The fuel consumption has been predicted while assuming the vehicle to have automatic transmission without lock-up. With a manual gearbox the fuel consumption will be improved by around 5-6%.

(5) Noise emission predictions were based on a distance of 15 m from the test vehicle during the American drive-by procedure according to SAE J986A. Established formulae were used which are known to be accurate for both diesel and gasoline engines. The method was:-

(a) prediction of the noise level of an equivalent conventional gasoline engine of the same bore

(b) adjustment of this level by a correction factor based on either measured comparative noise emissions or by consideration of the combustion pressure diagram and engine structure.

These noise levels could be reduced by up to 3 dBA by the use of engine shielding.

Design points which are applicable to all the reciprocating engines are as follows:-

(1) Cast iron was universally applied as the cylinder block material for high strength and low cost with integral cylinder bores. Cast iron was also used for all cylinder heads.

(2) The major dimensions, design and rigidity of the crankcase and crankshaft followed conventional gasoline engine practice in the cases when the maximum cylinder pressures were equivalent to those of a gasoline engine. In all cases the piston ring pack was designed for gasoline engine practice with two compression rings and one oil control ring.

(3) Crankshaft bearing loadings were based on the maximum cylinder pressure and taking into account the bearing overlap but without inertia relief. All connecting rods were straight-cut.

(4) The cylinder head combustion gas face was made flat and parallel to the cylinder head deck for simplicity of manufacture in most of the configurations. Exhaust valve seats were also induction hardened to prevent valve seat recession which can occur with unleaded gasoline.

(5) Valve gear generally adopted followed current American gasoline engine practice with pushrod operated valves, pressed steel rockers and hydraulic tappets. On the V-8 configurations a single central camshaft was chosen for compactness and simplicity. Overhead camshafts were not considered to offer any significant advantages for this application and speed ranges although in one case it proved necessary in order to relieve cylinder head congestion.

(6) The choice of a 90° V-angle for all the V-8 configurations was influenced by current American practice. With a cruciform crankshaft complete external balance and equal engine firing intervals are obtained. Complete external balance is also obtained with the in-line 6 configurations together with equal firing intervals.

(7) V-8 balance: There is complete balance of the primary forces, secondary forces and secondary couples. Primary couples are fully balanced by means of suitable crankshaft balance weights.

In-line 6 balance: Complete primary and secondary balance is achieved. The crankshafts are provided with counterweights to relieve inertia loads on end and central main bearings.

(8) For all the V-8 configurations the optimum position for the inlet manifold was found to be between the engine banks. This position was generally determined by the need for a single throttle to be conveniently positioned. Outboard inlet manifolds make for difficult air control. Synchronisation of two throttles, one per bank, would be necessary or alternatively long inlet tracts leading to a single throttle.

(9) In the interests of low noise the use of sound deadened steel material was used for the rocker box covers and oil sump covers on the V-8 configurations and additionally for the tappet inspection covers on the in-line 6 configurations.

(10) V-8 water circuit: The water pump was positioned on the front face of the block, discharging coolant through both cylinder banks and returning via the cylinder heads to a collector with a single outlet.

In-line 6 water circuit: The water pump was positioned on the front face of the block discharging directly into the cylinder block.

(11) The design of the complex fuel injection systems for many of the engines assumed the use of present-day technology in a form that could be developed for production relatively quickly. In all cases this has resulted in a fully mechanical system as in the stratified charge variants covered in the literature survey. It is quite possible that electronic fuel injection systems offer significant advantages, but a longer development time would be necessary before production could begin.

GASOLINE ENGINE

While no engine configuration studies have been carried out on standard gasoline engines, it was necessary to have estimates of performance for comparison with the various stratified charge engines.

Two gasoline engines were studied, the first being a V-8 following current American practice both in design and performance, and the second a 6 cylinder engine more typical of European practice.

Category: Standard Gasoline

V-8, Naturally Aspirated Engine - Primary Emission Target

Bore	97 mm	3.82 in
Stroke	76 mm	3.0 in
Bore/Stroke Ratio	1.28	
Displacement	4.5L	275 in^3
Power	96 kW at 66.7 rev/s	128 bhp at 4000 rev/min
BMEP	6.26 bar	91 lbf/in^2
Max. BMEP	7.9 bar at 41.6 rev/s	115 lbf/in^2 at 2500 rev/min
Max. Torque	285 Nm	210 lbf.ft
Torque Back-up	25%	
Power/Unit Displacement	21.4 kW/L	0.465 bhp/in^3
Max. Piston Speed	10.2 m/s	2000 ft/min
Engine Weight	245 kg	540 lb
Predicted CVS-CH results		
Fuel Economy	16.0 miles/U.S. gallon	
Fuel Consumption	14.6 L/100 km	
HC Baseline/Controlled	1.8/0.2 g/mile	
CO Baseline/Controlled	30/1.0 g/mile	
NO_x Controlled	1.3 g/mile	
Estimated Noise	71 dBA	

Specific Performance and Emissions

Using typical specific performance levels for this type of engine, i.e. 21.0-22.0 kW/L (0.46-0.48 bhp/in^3), the target power output demands a swept volume of 4.5 L (275 in^3). This capacity, in conjunction with a rated speed of 66.7 rev/s

(typical of most standard American engines) produces the target performance levels resulting in satisfactory driving characteristics with a simple three or four speed transmission. The performance curves for this engine can be seen in Figure 1.

The performance levels can be achieved with the engine in low emissions build but external hang on emissions control devices are necessary, their complexity depending on the severity of the emissions target. The primary project targets can be achieved by using close tolerance sophisticated carburettors in conjunction with modulated exhaust gas recycle, air injection into the exhaust and an oxidation catalyst. All these devices can be considered current technology and the various trade offs for low emissions are well known (increased power plant weight, first cost, maintenance cost, a demand for lead-free fuel, and a depreciation in vehicle fuel economy).

A fuel economy of 16.0 miles/U.S. gallon (14.6 L/100 km) has been assumed for the gasoline powered vehicle when in the primary target build. This figure is representative of good gasoline engines of this type. The philosophy adopted in the literature survey of making comparisons with good, rather than average, gasoline engines has been retained for this study. The estimated engine weight was 245 kg (540 lb).

Using established noise prediction formulae, bare engine noise levels on a test bed would be 94 dBA at rated load and speed. This correlates with a drive-by noise level of 71 dBA at 15.23 m under standard American test conditions.

The secondary project emissions objectives of 0.4 g/mile NO_x while maintaining HC and CO levels, demand the additional use of a reducing catalyst and possible further catalytic devices (getter box) to protect the reducing catalyst from oxygen spikes. Due to the need to operate with low oxygen concentration in the exhaust (less than 0.5%) it is necessary to run with a mixture strength approaching stoichiometric conditions with a resultant fuel economy penalty. However, although the secondary target emissions can be reached at zero miles, the present day reducing catalysts have insufficient durability to achieve the secondary target. Therefore no gasoline engines were configured for the secondary target.

Category: Standard Gasoline

In-Line 6, Naturally Aspirated Engine - Primary Emission Target

Bore	88 mm	3.46 in
Stroke	82 mm	3.22 in
Bore/Stroke Ratio	1.08	
Displacement	2.99 L	183 in^3
Power	96 kW at 83.3 rev/s	128 bhp at 5000 rev/min
BMEP	7.6 bar	110 lbf/in^2
Max. BMEP	9.75 bar at 50 rev/s	141 lbf/in^2 at 3000 rev/min
Max. Torque	232 Nm	171 lbf.ft
Torque Back-up	20%	

Power/Unit Displacement	32.1 kW/L	0.7 bhp/in^3
Max. Piston Speed	13.6 m/s	2680 ft/min
Engine Weight	204 kg	450 lb
Predicted CVS-CH Results		
Fuel Economy	17.4 miles/U.S. gallon	
Fuel Consumption	13.5 L/100 km	
HC) Baseline/Controlled	1.8/0.2 g/mile	
CO) Baseline/Controlled	30/1.0 g/mile	
NO_x Controlled	1.3 g/mile	
Estimated Noise	73 dBA	

The first and obvious difference between American and European engines of this power range is that of specific performance. Whereas the American V-8 gasoline engine runs to around 67 rev/s and develops 21 kW/L (0.47 bhp/in^3), the European engine runs to at least 83 rev/s and develops a minimum of 32 kW/L (0.7 bhp/in^3), normally nearer 36 kW/L (0.8 bhp/in^3). The major reason for these vastly differing philosophies is one of economics; mainly because of taxation, European fuel prices have always been high in terms of real spending power with a resultant continuing trend towards small capacity, high economy engines and cars. On the other hand, the price of fuel in America has always been low and fuel consumption has never been a major consideration until recently; engine size has therefore increased over the years to improve driveability and to some extent is a sales feature.

A total power requirement of 96 kW (128 bhp) and a torque back-up of 20% to enable the prototype vehicle to achieve its target performance could be achieved easily with a 3 litre, six cylinder engine running up 83.3 rev/s. A typical oversquare cylinder configuration of 88 mm bore x 82 mm stroke (3.46" x 3.22") has been selected. The use of petrol injection will ensure good distribution between cylinders and should allow the engine to run at generally leaner mixture strength than if carburettors were used. Estimated performance can be seen in Fig. 2.

These performance figures and the project primary emissions targets could be achieved using the same external hang-on control devices as the V-8 gasoline engine, i.e. modulated exhaust gas recycle, air injection and an oxidation catalyst.

Overall economy levels during CVS-CH testing have been predicted at 17.4 miles/U.S. gallon (13.5 L/100 km). This results in a total fuel consumption saving of some 7.5% compared with the V-8 gasoline engine.

From European data, the predicted engine weight is 204 kg (450 lb), a reduction of 41 kg (100 lb) compared with the V-8 engine.

Estimated drive-by noise levels of this engine in the prototype vehicle are 73 dBA at 15 m (50 ft). The reason for the 2 dBA increase in drive-by levels

compared with the V-8 is the higher rotational speed of the 3 litre engine.

As with the V-8 engine, the secondary target could be achieved at low mileage with reducing catalysts but current versions of these catalysts cannot achieve adequate durability and so no configuration is given for the secondary target.

ENGINE CONFIGURATION WITHIN CATEGORY I

The Ford PROCO combustion system was chosen from the various systems within Category I for application to the configuration study because it has already been satisfactorily developed and utilised for automotive purposes. In addition, the hydrocarbon emission levels are tolerable, and can be easily controlled. This system has, therefore, a better known potential compared to the other systems of which only the M.C.P. has been developed to a stage suitable for possible automotive application.

Turbocharged versions were not considered to give any useful advantages to this category of stratified charge engine, and were, therefore, not included. No rotary engines were included since it is believed that an early fuel injection timing would not provide satisfactory charge stratification during the period of time before the ignition point. Furthermore, no experimental evidence could be found to support the feasibility of a rotary version within this category.

Engines included in the configuration study and schemed to meet the primary emission target were:-

(1) V-8, 4.15 L, PROCO engine.

(2) I-L 6, 4.15 L, PROCO engine.

Only one engine configuration was considered feasible to achieve the secondary emission target:-

(3) V-8, 5.25 L, PROCO engine

Category I

(1) V-8 Naturally Aspirated - PROCO Engine - Primary Emission Target

Bore	87 mm	3.43 in
Stroke	87 mm	3.43 in
Bore/Stroke Ratio	1	
Displacement	4.15 L	254 in^3
Compression Ratio	11:1	
Power	96 kW at 66.7 rev/s	128 bhp at 4000 rev/min
BMEP	6.93 bar	100 lbf/in^2
Max. BMEP	8.9 bar at 38 rev/s	129 lbf/in^2 at 2280 rev/min
Max. Torque	292 Nm	215 lbf.ft
Torque Back-up	19%	
Power/Unit Displacement	23.1 kW/L	0.504 bhp/in^3
Max. Piston Speed	11.6 m/s	2280 ft/min
Max. Cylinder Pressure	65.5 bar	950 lbf/in^2

Con-rod

Distance between centres, L	148.6 mm	5.85 in
Ratio of L to crank throw (r), L/r	3.42	

Cylinder bore spacing 1.17 x cylinder bore

Package

Engine length	770 mm	30.3 in
height	597 mm	23.5 in
width	600 mm	23.6 in
box volume	.275 m^3	9.72 ft^3
weight	250 kg	550 lb

Predicted CVS-CH Results

Fuel Economy	18.7 miles/U.S. gallon
Fuel Consumption	12.5 L/100 km
HC) Baseline/Controlled	1.0/0.15 g/mile
CO) Baseline/Controlled	8.0/1.0 g/mile
NO_x Controlled	1.4 g/mile
Estimated noise	71 dBA

Predicted Performance, Economy, Emissions and Noise

A total swept volume of 4.5 litre (254 in^3) was calculated using an estimated bmep of 6.9 bar (100 lbf/in^2) at the rated speed of 66.7 rev/s (4000 rev/min), to yield 96 kw (128 bhp).

The engine bmep curve was estimated by predicting the imep from the volumetric and indicated thermal efficiencies, and taking account of engine friction. Knowledge of the performance of the proposed helical type of inlet ports provided values of volumetric efficiency and indicated thermal efficiencies were obtained from published curves on PROCO engines. The friction (fmep) losses of the Ford 7 litre FCP engine were used for these calculations and the resulting engine bmep is slightly above that for the Ford L141 PROCO engine. The estimated performance curve of this engine is shown in Fig. 3.

To meet the primary NO_x emission level of 1.5 g/mile, an average of 7% of the exhaust gas must be recirculated with proportional modulation, but reduced to zero flow at full load. A large oxidation catalyst will also be required for the vehicle to achieve the primary emission levels of 0.41 g/mile HC and 3.4 g/mile CO. The catalyst position will be underneath the vehicle floor and must be placed as close as possible to the exhaust manifolds. In order to generate high exhaust gas temperatures following a cold start, the exhaust manifolds must have a low

thermal inertia, so that the catalyst may light off.

Fuel consumption and emission estimates were made by careful extrapolation of published data from tests on various PROCO engines. Emissions durability of this vehicle indicated that the primary target emissions should be maintained for at least 25,000 miles. The most critical emissions durability factor is the HC catalyst conversion efficiency required to hold the HC result to below 0.41 g/mile.

The test results recorded on the PROCO Capri by SWRI were taken into account in making the noise estimation.

Design Notes

The choice of a bore/stroke ratio of 1 compared to a bore/stroke ratio of 1.29 on the Ford L141 engine was made because a smaller bore will give better combustion control and combustion efficiency. Moreover, a smaller bore will give lower noise so the bore/stroke ratio of 1 is therefore a compromise with adequate breathing and engine height.

The engine installation drawing (Fig. 4) shows the important engine package dimensions. Cylinder centres at 1.17 x cylinder bore are controlled by the casting core thickness of the water jacket between the bores.

Cylinder head and manifold arrangement

Swirl type inlet ports, fuel injectors and push rods are positioned on the inboard side with the exhaust ports and spark plugs on the outboard side. The cylinder head layout is shown in Fig. 5. Spark plugs and fuel injectors are retained by the use of screwed sleeves.

The exhaust manifolds are placed outboard to give cross-flow porting and the best cylinder head layout with four retaining cylinder head studs surrounding each bore. The manifolds are then turned downwards from the cylinder ports and do not increase the width of the engine significantly.

Combustion system and breathing considerations

The combustion chamber which is concentrically placed in the piston crown is symmetrical about the vertical bore centreline. The piston is designed to have about 60% squish area. Fig. 5 shows the combustion chamber, spark plug and fuel injector layout. The spark plug and injector relative positions are essentially the same as used on the L141 PROCO engine so that the spark plug gap is located just above the conical spray of injected fuel.

In-cylinder air swirl is imparted by means of a helical type of swirl-generating inlet port, as indicated in Fig. 5. The PROCO method of imparting swirl is to use an intake port having a directed intake restriction in the shape of a crescent but helical inlet ports give a superior volumetric efficiency. The in-cylinder swirl is estimated to be 3 times the crankshaft speed.

The inlet valve inner seat diameter is 34.6 mm, about 40% of the bore, which gives a mean inlet gas velocity of about 73.2 m/s (240 ft/sec) at the rated speed.

Fuel injector and control system

The fuel injector is the outwardly opening poppet valve type and is identical

to the one used on the Ford PROCO L141 engine. The poppet valve is designed to vibrate at 2000-4000 Hz during injection to improve the fuel spray quality. The valve opening pressure is 17.24 bar.

A combined injection pump and ignition distributor unit, again identical to that used on the Ford PROCO L141 engine, has been utilised. This unit is positioned in front of and at the same angle to the vertical as the left hand bank (see Fig. 4). Because of the difficulty of positioning this unit with a suitable drive, this was considered to be the best compromise solution to give the shortest length of fuel pipes leading to the inboard injectors. The drive of this unit is by a mitre bevel gear off the front end of the camshaft, for timing accuracy.

Auxiliary Drives

The camshaft, fuel pump/distributor unit and hydraulic pump are driven by an internal gear system. Gear drives give good reliability and accuracy of timing over long periods with low noise.

Twin V-belt drives are used for the alternator and water pump and a single V-belt for the air conditioning unit. A conventional skew gear drive is used for the oil pump.

Category I

(2) In-Line 6, Naturally Aspirated - PROCO Engine - Primary Emission Target

Bore	96 mm	3.78 in
Stroke	96 mm	3.78 in
Bore/Stroke Ratio	1.0	
Displacement	4.15 L	254 in^3
Compression Ratio	11:1	
Power	96.5 kW at 66.7 rev/s	129 bhp at 4000 rev/min
BMEP	6.95 bar	101 lbf/in^2
Max. BMEP	8.8 bar	128 lbf/in^2
Max. Torque	293 Nm	216 lbf.ft
Torque Back-up	26%	
Power/Unit Displacement	23.3 kW/L	0.508 bhp/in^3
Max. Piston Speed	12.8 m/s	2520 ft/min
Max. Cylinder Pressure	65.5 bar	950 lbf/in^2
Con-rod		
Distance between centres, L	152.4 mm	6.0 in
Ratio of L to crank throw (r), L/r	3.17	

Cylinder bore spacing	1.17 x cylinder bore	
Package		
Engine length	995 mm	39.16 in
height	638 mm	25.12 in
width	528 mm	20.8 in
box volume	.335 m^3	11.84 ft^3
weight	263 kg	580 lb

Predicted CVS-CH Results

Fuel Economy	18.4 miles/U.S. gallon
Fuel Consumption	12.74 L/100 km
HC) Baseline/Controlled	1.0/0.15 g/mile
CO) Baseline/Controlled	8.0/0.8 g/mile
NO_x Controlled	1.3 g/mile
Estimated noise	75 dBA

Predicted Performance, Economy, Emissions, and Noise

The specification for a target power output of 96 kW (128 bhp) was met by an in-line 6 cylinder engine of 4.15 litre (254 in^3). The method of performance calculation used for the previous PROCO V-8 configuration was applied and the estimated performance curve of this engine is shown in Fig. 7. Fuel consumption, exhaust emission and noise predictions were also made, using the previous methods.

The same exhaust emission control methods as proposed for the V-8 configuration will be necessary. That is, an average rate of 7% EGR with proportional modulation, reducing to zero flow at full load, plus a single oxidising catalyst fitted into the exhaust system underneath the vehicle floor. Emissions durability should be satisfactory to hold the exhaust emission levels to within the primary target for at least 25,000 miles.

Design Notes (Figs. 8, 9)

The bore/stroke ratio of 1 was chosen, common to the V-8 configuration and for the same reasons.

The engine installation drawing (Fig. 8) shows the important engine package dimensions and a cross-sectional arrangement of this engine is shown in Fig. 9. Cylinder centres at 1.17 x cylinder bore controlled by casting core thickness of the water jacket between bores.

Cylinder Head and Manifold Arrangement

Cylinder head layout as for previous V-8 configuration. Cross-flow porting gives more latitude to the porting, spark plug and injector layout than a uni-sided

port arrangement. An air throttle is used to control the inlet air quantity during part load operation.

Combustion system and breathing considerations

The layout of the injector, spark plug and valves in relation to the combustion chamber is practically identical to the previous V-8 configuration. Helical inlet ports are used to impart the in-cylinder air swirl.

The inlet valve inner seat diameter is 39.8 mm, 41.5% of the bore, which gives a mean inlet gas velocity of 80 m/s at the rated speed. Although this high velocity penalises the breathing at high speeds, the target power is met and torque back-up is excellent.

Fuel Injector and Control System

The same fuel injector and a similar fuel pump/distributor unit as described for the previous V-8 configuration has been schemed for this engine. The fuel pump/distributor unit is mounted in a vertical position at the front of the engine and driven by a mitre bevel gear from the end of the camshaft for accuracy of timing.

Auxiliary Drives

An internal gear system is used to drive the camshaft, fuel pump/distributor unit and hydraulic pump. Twin V-belt drives are used for the alternator and water pump and a single V-belt drive for the air conditioning unit. All the above auxiliaries are mounted on the front of the engine as indicated in Fig. 8

Category 1

(3) V-8 Naturally Aspirated - PROCO Engine - Secondary Emission Target

Bore	94 mm	3.7 in
Stroke	94 mm	3.7 in
Bore/Stroke Ratio	1.0	
Displacement	5.25 L	320 in^3
Compression Ratio	11:1	
Power	122 kW at 66.7 rev/s	163 bhp at 4000 rev/min
BMEP	7 bar	101 5 lbf/in^2
Max. BMEP	8.8 bar	128 lbf/in^2
Max. Torque	365 Nm	270 lbf.ft
Torque Back-up	13%	
Power/Unit Displacement	23.4 kW/L	0.509 bhp/in^3
Max. Piston Speed	12.6 m/s	2470 ft/min

Max. Cylinder Pressure	65.5 bar	950 lbf/in^2
Con-rod		
Distance between centres, L	162.6 mm	6.4 in
Ratio of L to crank throw (r), L/r	3.45	
Cylinder bore spacing	1.17 x cylinder bore	
Package		
Engine length	800 mm	31.5 in
height	609 mm	24 in
width	622 mm	24.5 in
box volume	0.303 m^3	10.7 ft^3
weight	259 kg	570 lb

Predicted CVS-CH Results

Fuel Economy	16.5 miles/U.S. gallon
Fuel Consumption	14.2 L/100 km
HC) Baseline/Controlled	2.5/0.25 g/mile
CO)	12.0/0.8 g/mile
NO_x Controlled	0.37 g/mile
Estimated Noise	72.5 dBA

Predicted Performance, Economy, Emissions and Noise

In order to offset the power loss due to the extra EGR quantities and so maintain satisfactory vehicle propulsion during the CVS-CH driving cycle, an increased engine swept volume over that proposed for the primary emission target engines will be required. Computer calculations indicated that an engine swept volume of 5.25 litre (320 in^3) would be sufficient for this purpose.

The BMEP developed by the engine when operating with the high EGR rates during the CVS-CH driving cycle was assumed to be between 4.8 and 5.8 bar (70-85 lbf/in^2) depending on speed, based on Ford's published figures from their L141 PROCO engine. The engine capacity of 5.25 litre ensures that the maximum BMEP of 5.8 bar should not be exceeded during the CVS-CH driving cycle. Predictions of the engine full throttle performance were made using the same method as described for the V-8 primary emission target engine and the estimated performance curve is shown in Fig. 10. It is clear that since the EGR is modulated to zero rate at full load, the maximum power is well above the target of 96 kW, at 125 kW and therefore road performance will be more than adequate.

To meet the stringent secondary NO_x emission target of 0.4 g/mile higher EGR

rates of about 20-25% at light loads modulated to 15% at the maximum CVS test loads. These EGR rates will increase the engine HC emissions such that a single catalyst would not give a satisfactory durability.

Two oxidation catalysts, fitted in series, underneath the vehicle floor, is considered to be the most convenient method to control the HC and CO emissions. Low thermal inertia exhaust manifolds will also be necessary. Emission durability to meet the secondary emission target levels of 25,000 miles driving, cannot be assured at the present moment, but should be possible after further catalyst and engine development.

Design Notes

The necessary engine swept volume of 5.25 litre was best met with a V-8 engine configuration.

The same reasoning was used in the determination of a bore/stroke ratio of unity as was applied to the earlier configurations within this category. In other words, the minimum bore size compatible with the combustion system was chosen to give good combustion control.

The cylinder head and general engine layout is basically identical but proportionally increased in size to that used for the V-8 configuration schemed to meet the primary emission target. For this reason only the installation drawing, Fig. 11, has been included to allow an assessment of the engine configuration.

Auxiliary drive systems and installation positions also follow those proposed for the previous V-8 configuration.

ENGINE CONFIGURATIONS WITHIN CATEGORY 2

The Texaco TCCS has undergone a considerable development programme for automotive applications and was therefore chosen for this configuration study. Deutz have a system with a similar arrangement to Texaco but not developed so extensively, whilst Curtiss-Wright have applied their system to a rotary engine. A rotary engine with the Curtiss-Wright system has also been configurated.

To meet the primary emission target, three engine builds have been schemed:-

(1) V-8, 5.4 L Naturally Aspirated, TCCS engine.

(2) 1-L 6, 4.16 L, Turbocharged, TCCS engine.

(3) Rotary, 2 bank, 5.5 L, Curtiss-Wright engine.

Only one engine has been schemed to meet the secondary emission target:-

(4) V-8, 5.87 L, Turbocharged, TCCS engine.

Category 2

(1) V-8 Naturally Aspirated - TCCS Engine - Primary Emission Target

Bore	95 mm	3.74 in
Stroke	95 mm	3.74 in
Bore/Stroke Ratio	1.0	
Displacement	5.4 L	330 in^3
Compression Ratio	10:1	
Power	96 kW at 66.7 rev/s	128 bhp at 4000 rev/min
BMEP	5.3 bar	77 lbf/in^2
Max. BMEP	6.5 bar at 29 rev/s	94 lbf/in^2 at 1740 rev/min
Max. Torque	280 Nm	206 lbf.ft
Torque Back-up	23%	
Power/Unit Displacement	17.8 kW/L	0.388 bhp/in^3
Max. Piston Speed	12.7 m/s	2500 ft/min
Max. Cylinder Pressure	51.4 bar	745 lbf/in^2
Con-rod		
Distance between centres, L	162.6 mm	6.4 in
Ratio of L to crank throw (r) L/r	3.41	
Cylinder bore spacing	1.23 x cylinder bore	

Package

Engine length	823 mm	32.4 in
height	658 mm	25.9 in
width	622 mm	24.5 in
box volume	0.337 m^3	11.9 ft^3
weight	273 kg	600 lb

Predicted CVS-CH Results

Fuel Economy	17 miles/U.S. gallon
Fuel Consumption	13.8 L/100 km
HC)) Baseline/Controlled	2.5/0.3 g/mile
CO)	10/1.5 g/mile
NO_x Controlled	0.8 g/mile
Estimated Noise	70.5 dBA

Predicted Performance, Economy, Emissions and Noise

The relatively low bmep characteristic of this engine required a large engine swept volume of 5.4 litre (330 in^3) in order to achieve the target power output, 96 kW (128 bhp) at 67 rev/s (4000 rev/min). An in-line 6, naturally aspirated version was not considered to be attractive, due to high piston speeds.

Performance calculations were made using the following method. The maximum power air/fuel ratio and indicated specific fuel consumption for the TCCS process had first to be established. Since the TCCS process is smoke limited, the maximum power air/fuel ratio is a function of the engine smoke level. Information extracted from reports by Texaco and Toyota on the L141 engine is shown in Fig. 12. Apparently, the Toyota engine reached a Bosch No. 4 smoke limit at a leaner air/fuel ratio than the Texaco engine. Therefore, the power output was lower. At a Bosch smoke number of 2-2½, which is realistic for automotive applications, the power output of the Texaco engine was reduced by about 10%. Presumably the performance of the Toyota engine would be compromised by a similar factor at this smoke level. However, it was decided that the more optimistic Texaco results should be used for this prediction

Indicated specific air consumption was calculated from air/fuel ratios multiplied by indicated specific fuel consumption, Fig. 13, and extrapolated to 1000 and 4000 rev/min. The volumetric efficiency was estimated by calculation of the gulp factor. Unity gulp factor was found to be at 5000 rev/min. A correlation exists in Taylor and Taylor (The Internal Combustion Engine, publisher International Textbook Company) between gulp factor and volumetric efficiency, so these values were extracted and increased by 2%. The values in Taylor and Taylor refer to a gasoline engine, and if fuel is absent from the induced air, the volume occupied by the fuel vapour can be replaced by air. Engine power was then calculated from:-

$$IMEP = \frac{\text{Volumetric efficiency}}{\text{Indicated specific air consumption}}$$

Next, the friction levels of three L141 engines were inspected, Fig. 14. At 2500 rev/min and 3000 rev/min the FMEP was lower than for a typical European 4 cylinder gasoline engine. This was surprising, in view of the additional motoring loss of the fuel injection equipment. However, the late closing of the inlet valve of the L141 and the low volumetric efficiency at higher speeds may result in a lower effective compression ratio. This would reduce the compression expansion motoring loss. In the predicted engine, the inlet valve opening period has been reduced, so one would expect the friction levels to be similar to the typical 4 cylinder engine. Thus, the BMEP of the predicted engine was calculated from the IMEP above, and the average friction levels of the L141 engines.

The resulting performance curves for this engine are shown in Fig. 15, and the target power of 96 kW (128 bhp) is reached at 66.7 rev/s. It is clear that the specific power output of this engine is low at 17.8 kW/litre (.39 bhp/in^3) due to the lean operating air/fuel ratio, at the smoke limit of Bosch No. $2\frac{1}{2}$-$1\frac{1}{2}$.

This category of stratified charge engine inherently gives high baseline HC emissions and for this reason there will be a high dependence on oxidising catalysts in order to achieve the HC primary emission target of 0.41 g/mile. It is considered that for all engine configurations within this category, two catalysts, connected in series, will be necessary to control the HC emissions. This catalyst arrangement will automatically control the CO emissions satisfactorily. Ricardo did not propose a thermal reactor plus an oxidising catalyst, as Texaco have done to achieve the secondary target, since it is considered less economic to produce two different exhaust control components.

The exhaust pipe from each engine bank will require it to be joined as close to the engine as is conveniently possible to allow an early entry into the first catalyst. Low thermal inertia exhaust manifolds, preferably insulated, will also be necessary to avoid exhaust gas temperature losses.

A level of about 10% EGR modulated during the light to medium loads of the CVS-CH driving cycle is recommended. This relatively high EGR rate will reduce the NO_x emission more than necessary but is considered as the best method of increasing the exhaust gas temperature for catalyst operation. EGR should be modulated to zero rate at full load.

It is thought that there may be problems in maintaining the HC levels to within the primary target of 0.41 g/mile. However, with the large volume of two catalysts the target emission levels should be held for a period of 25,000 miles. A good NO_x emission durability should result and no problems in meeting the NO_x emission target for 50,000 mile periods are envisaged.

Design Notes (Figs. 16, 17, 18)

This engine was designed in a conservative manner following many stipulated procedures set down by Texaco for guidance related to engines having the TCCS combustion system.

Having calculated the engine swept volume of 5.4 litre (330 in^3), the mathematical procedures prescribed by Texaco were employed to optimise the bore/stroke ratio to 1 and compression ratio to 10:1.

The cylinder centres at 1.23 x cylinder bore are wider than standard American gasoline engine practice. The wide cylinder spacing was found necessary in order to allow sufficient space for the necessary porting and combustion system layout. A penalty in extra engine length results.

The engine installation drawing, Fig. 16, shows the important engine package dimensions. Fig. 17 shows the cylinder head layout and Fig. 18 is a cross-sectional arrangement.

Cylinder Head and Manifold Arrangement

The porting layout of the TCCS combustion system employing high swirl inlet ports was best achieved with a cross-flow arrangement.

Five retaining cylinder head studs surrounding each bore were found to give the greatest design scope for the porting layout. Fuel injectors and spark plugs were on the outboard (exhaust) side and pushrods on the inboard side.

Combustion System and Breathing Considerations

The TCCS combustion system was employed which comprises a toroidal type, deep bowl combustion chamber in the piston. The piston bowl diameter, being 58% of the bore, was designed to give Texaco swirl levels of 3.5 x engine speed and 7.5 x engine speed at the end of induction and at t.d.c. respectively.

The fuel injector and spark plug positions follow closely those recommended by Texaco such that the spark plug gap is on the edge of the fuel spray, as can be seen in Fig. 17. A special ignition system, the Texaco Transistorised Ignition system, provides a high energy and long duration spark. Furthermore, the spark plug is sleeve mounted into the cylinder head at a pre-determined radial position to ensure that its earth electrode does not interfere with the fuel spray directed towards the ignition source.

High swirl inlet ports specially developed by Ricardo have been utilised in place of the inlet ports stipulated by Texaco. The Ricardo inlet ports should give improved volumetric efficiency and performance, in particular at high speeds. In other respects the Texaco recommendations on inlet valve dimensions and timing were follows.

Valve lift/inner seat diameter	28%
Inner seat diameter/cylinder bore	38.5%
Inlet valve opening period	232°

The inlet valve inner seat diameter of 36.6 mm gives a mean inlet gas speed of 68.8 m/s (226 ft/sec) at the rated speed of 67 rev/s. A high valve offset of 13 mm from the cylinder bore centre has been employed in order to make space for the spark plug and fuel injector layout.

Fuel Injector and Control System

The fuel injector is of the inward opening pintle type but with a flat pintle sealing face as developed specifically for the TCCS system by Texaco. A distributor type of fuel injection pump, again as used by Texaco, has been mounted between the cylinder banks and is gear driven from the front of the crankshaft.

The fuel pipes are unavoidably long due to the position of the outboard injectors.

Auxiliary Drives

The camshaft, fuel injection pump and ignition distributor are gear driven from the front of the crankshaft, the ignition distributor having a separate skew gear drive from the gear on the camshaft nose. Gear drives were chosen for accuracy of timing over long periods combined with reliability and low noise. A conventional skew gear driven oil pump is used.

Twin V-belts drive the alternator, water pump and hydraulic pump and a single V-belt drives the air conditioning unit. Fig. 16 shows the installation layout of the above auxiliaries.

Category 2

(2) In-Line 6, Turbocharged - TCCS Engine - Primary Emissions Target

Bore	96 mm	3.78 in
Stroke	96 mm	3.78 in
Bore/Stroke Ratio	1.0	
Displacement	4.16 L	254 in^3
Compression Ratio	9:1	
Power	96 kW at 66.7 rev/s	128 bhp at 4000 rev/min
BMEP	6.9 bar	100 lbf/in^2
Max. BMEP	9.0 bar at 42 rev/s	130 lbf/in^2 at 2500 rev/min
Max. Torque	298 Nm	210 lbf.ft
Torque Back-up	15.4%	
Power/Unit Displacement	23.1 kW/L	0.504 bhp/in^3
Max. Piston Speed	2520 m/s	12.8 ft/min
Max. Cylinder Pressure	71 bar	1030 lbf/in^2
Con-rod		
Distance between centres, L	151.1 mm	5.95 in
Ratio of L to crank throw (r), L/r	3.15	
Cylinder bore spacing	1.16 x cylinder bore	
Package		
Engine length	981 mm	38.62 in

height	610 mm	24.0 in
width	578 mm	22.76 in
box volume	0.346 m^3	12.2 ft^3
weight	260 kg	572 lb

Predicted CVS-CH Results

Fuel Economy	17 miles/U.S. gallon
Fuel Consumption	13.8 L/100 km
HC) Baseline/Controlled	2.0/0.22 g/mile
CO) Baseline/Controlled	10/1.5 g/mile
NO_x Controlled	0.8 g/mile
Estimated Noise	71 dBA

Predicted Performance, Economy, Emissions and Noise

This turbocharged engine was schemed to evaluate a power plant with a higher specific power output than the previous naturally aspirated version. As a result of turbocharging the engine swept volume required to achieve the same target performance level is reduced from 5.4 litre (330 in^3) for the NA version to 4.16 litre (254 in^3).

A target of 8.95 bar BMEP at 2000 rev/min was adopted as the starting point from which performance calculations were made. This condition implies a boost density ratio of 1.27. A typical compressor curve was obtained from a turbocharger manufacturer, and an empirical Ricardo relationship between boost pressure and engine speed used to predict the boost density ratio over the remainder of the engine speed range, Fig. 19.

The fuel pump discharge characteristics had to be tailored to prevent overloading the engine structure. A simple formula was derived for the maximum cylinder pressure based on the constant volume cycle, where the values of the ratio of specific heats for the gas were based on polynomials of gas temperature and mixture strength. Air/fuel ratios were calculated for each engine speed above 2000 rev/min (also shown in Fig. 19), assuming that the maximum cylinder pressure did not exceed that at 2000 rev/min. These calculations indicated that the fuel delivery per injection should decrease by 33% in a linear manner between 2000 and 4000 rev/min. Fuel injection pumps do not follow this trend naturally, so a speed modulated cut-off device would be required. An air/fuel ratio of 19:1 at 2000 rev/min, corresponding to Bosch smoke No. 2, was maintained. During engine accelerations, the finite response time of the turbocharger could cause the air/fuel ratio to drop below 19:1, and the engine would emit a higher smoke level.

L141 engine results were cross-plotted as indicated specific fuel consumption against air/fuel ratio, and this relationship was assumed to be applicable to the turbocharged version, see Fig. 20. Next, the appropriate fuel consumption was obtained at the air/fuel ratio corresponding to each engine speed. Finally, IMEP was calculated by the following formula:-

$$IMEP = \frac{\text{Density Ratio x Volumetric Efficiency}}{\text{Air Fuel Ratio x Indicated Specific Fuel Consumption}}$$

The friction levels of a typical European gasoline engine were used to calculate the brake performance curves shown in Fig. 21. This was an optimistic friction figure, since the maximum cylinder pressures were calculated to be about 15% above standard European gasoline engine practice, and about 30% above U.S. gasoline engine practice.

Specific engine power at 23.6 kW/litre (.515 bhp/in^3) is significantly improved by comparison to the previous naturally aspirated engine together with a lower estimated engine weight of 260 kg (572 lb).

There is a high dependence on oxidising catalysts to reduce the HC emissions to the primary target of 0.41 g/mile. Two catalysts fitted in series, downstream of the turbocharger, will be necessary. The exhaust manifold is recommended to be of fairly large volume, insulated and with a low thermal inertia. This type of exhaust manifold should reduce exhaust gas heat losses and so assist the catalyst oxidation efficiency. The CO emissions should be automatically controlled with the above exhaust system.

A 10% rate of EGR is recommended during the light to medium loads encountered during the CVS-CH test cycle in order to maintain sufficiently high exhaust temperatures for catalyst operation, the EGR rate being modulated to zero rate at full load. The NO_x emissions should be adequately low with these EGR rates.

The catalytic problem of maintaining the HC emissions to within the primary target will be the critical emission durability factor, as for the previous configuration. However, there should be no problems in maintaining the CO and NO_x emission to within the respective target levels for a 25,000 mile period.

Design Notes (Figs. 22, 23, 24)

This engine was designed to be highly boosted by turbocharging, resulting in higher cylinder pressures than normally associated with gasoline engines and the crankshaft was therefore made more rigid to cope with the higher loadings. Cylinder spacing at 1.16 x cylinder bore was controlled by the casting core thickness of the water jacket between bores.

It should be noted that the air filter has not been included in the engine package size since in this case it would be more conveniently mounted on the vehicle than on the engine. Fig. 22 shows the important engine package dimensions.

Cylinder Head and Manifold Arrangement

The fitting of a turbocharger made a uni-sided porting arrangement the most convenient. High swirl (helical) inlet ports are employed with a four stud cylinder head pattern as the best solution for the porting layout. This also allows more compact cylinder spacing than the previous TCCS V-8. Pushrods are on the manifold side and spark plugs plus injectors on the other side. The injectors are mounted with single bolt clamps and the spark plugs with screwed sleeves.

Combustion System and Breathing Considerations

The TCCS combustion system was employed as shown in Fig. 23. Combustion chamber and valve proportions are substantially the same as recommended for the

naturally aspirated engine, as is the ignition system. The fuel injector and spark plug specification and relative positions are also the same.

The compression ratio is reduced from the naturally aspirated version to 9:1. The high swirl inlet ports might increase the swirl levels with pressure boosting but these should still lie within the swirl levels stipulated by Texaco of 7 to 10 times engine speed at t.d.c. An alternative to this approach would be to reduce the inlet valve diameter and increase the exhaust valve diameter. The swirl level would be reduced to about 7, but additional turbine boost could be achieved from the higher kinetic energy of the exhaust gas. This approach could improve the transient characteristics of the turbocharger, but involves a difficult matching operation and exhaust manifold layout.

Fuel Injector and Control System

Fuel injectors were identical to those for the naturally aspirated engine. A 6-cylinder version of the distributor type fuel injection pump is mounted horizontally on the opposite side to the manifolds in a position to give the shortest possible fuel pipe lengths.

Auxiliary Drives

An internal gear drive system is used to drive the camshaft, fuel injection pump and hydraulic pump. Conventional skew gear drives are used for the ignition distributor and oil pump. Vee-belt drives are used for the alternator, water pump and air conditioning unit. Fig. 22 shows the installation layout of the above auxiliaries.

Category 2

(3) Rotary, 2 Bank - Curtiss-Wright Engine - Primary Emission Target

Generating Radius	122 mm	4.8 in
Rotor Width	79 mm	3.11 in
Eccentricity	18.4 mm	0.724 in
Displacement	5.5 L	336 in^3
Compression Ratio	8.5:1	
Power	97 kW at 83 rev/s	130 bhp at 5000 rev/min
BMEP	6.3 bar	91.5 lbf/in^2
Max. BMEP	7.4 bar at 56 rev/s	107 lbf/in^2 at 3360 rev/min
Max. Torque	214 Nm	158 lbf.ft.
Torque Back-up	17.4%	
Power/Unit Displacement	17.6 kW/L	0.387 bhp/in^3
Max. Cylinder Pressure	42 bar	609 lbf/in^2

Package

Engine length	523 mm	20.6 in
height	660 mm	26.0 in
width	695 mm	27.35 in
box volume	0.24 m^3	8.5 ft^3
weight	150 kg	330 lb

Predicted CVS-CH Results

Fuel Economy	14.0 miles/U.S. gallon
Fuel Consumption	16.74 L/100 km
HC)) Baseline/Controlled	3.0/0.3 g/mile
CO)	15.0/0.8 g/mile
NO_x Controlled	1.0 g/mile
Estimated noise	71.0 dBA

Predicted Performance, Economy, Emissions and Noise

Performance calculations were based on results obtained by Curtiss-Wright to predict that a swept volume of 5.5 litre (336 in^3), the swept volume being a total of all rotor lobes, would be required in order to achieve the required target performance.

The brake performance of this engine is ultimately limited by smoke emission, however, Curtiss-Wright have not included smoke levels with their published power curves. For this reason Ricardo limited the maximum bhp at each engine speed to the smoke limits of Bosch No. 2.5 at 25 rev/s (1500 rev/min) to Bosch No. 1.5 at the rated speed of 83 rev/s (5000 rev/min). To make these calculations possible, the ratio of smoke limited bhp divided by the bhp at the maximum economy point as calculated for I.D.I. diesel engines, was assumed to hold true for this engine. Applying the smoke performance controlling factor to the published power output, throughout the engine speed range of the Curtiss-Wright RC2-60U10 engine, enabled the performance prediction to be made directly, see Fig. 25.

The engine specific power output, in terms of engine weight, is excellent compared with the naturally aspirated V-8 TCCS engine since the engine weight is estimated at just 150 kg (330 lb). Package size is also relatively small in terms of volume.

It is worth noting that if the lobe sealing technology can be improved, a better economy than that estimated could be achieved.

This engine version will produce higher baseline HC emissions, than the previous TCCS configurations considered within category 2 and because of the low exhaust gas temperatures it will be difficult to control both the HC and CO emissions using catalysts without a specialised exhaust manifolding from the engine.

The exhaust manifold must have a low thermal inertia and also be very well insulated throughout its length in order to maintain the exhaust temperature high enough for catalyst operation. The compact exhaust porting and close fitted manifold and also the inherent inefficiency (i.e. internal EGR due to seal leakages) will help in this respect. Two oxidation catalysts will be needed, fitted in series and as close as possible to the exit from the exhaust manifold.

There is a high dependence on the catalysts to reduce the HC and CO emissions, particularly the former emission, and maintaining the primary emission target for a 25,000 mile period may prove difficult. No problems are envisaged in keeping to within the NO_x target of 1.5 g/mile and the addition of EGR is not necessary.

Design Notes

Design features follow conventional 4-stroke form having two-lobe epitrochoid chambers and three-lobe rotors. The basic engine construction was based on Wankel rotary combustion engine practice.

The installation drawing, Fig. 26 indicates the important engine package dimensions and the Cross and Longitudinal sectional drawings on Fig. 27 show details of the engine construction and combustion system layout.

Manifold Arrangement

The exhaust manifold is bolted directly to the rotor housing, has low thermal inertia and is well insulated to maintain high exhaust gas temperatures. The inlet manifold is mounted directly above the exhaust manifold to suit peripheral (radial) ports.

Combustion System and Breathing Considerations

The shape of the combustion chamber recess within each rotor flank follows closely that proposed by Curtiss-Wright. In plan view the recess is asymmetrical, there being a leading edge pocket on each side of the rotor. This type of recess is known as a "beetle" type. In a section view the leading pockets of the recess are deeper than at the trailing edge in order to achieve the required time distribution of air mass past the fixed fuel spray envelope.

Two pairs of closely coupled spark plugs and fuel injectors per rotor are recommended. This arrangement should give thorough mixing and consistent firing properties which will result in the best possible air utilisation. This is normally the critical aspect of the stratified charge rotary engine.

The location of the injector/spark plug intersection point is 16.5° to the epitrochoid minor axis in the opposite direction to rotor rotation. The included angle between each injector and spark plug is 40° with injectors in the trailing position.

The spark plugs have a high heat range and conventional Wankel type electrodes. They are sleeve mounted into the rotor housing. The ignition system produces long duration and high energy sparks and the distributor contains two rotors, each rotor supplying the pair of spark plugs for a rotor bank.

The cavity into which both the electrodes and nozzle tip protrude has been designed for minimum lost volume. Furthermore, the combined width of two cavities per rotor has been kept small to prevent excessive by-pass leakage around the apex seals.

Peripheral (radial) inlet ports were preferred to side (axial) inlet ports due to the comparative gains in volumetric efficiency. Performance will not be lost at low speed/low power conditions by the normal effects of valve overlap since fuel injection occurs after the intake port closes.

The intake port was designed to close at 80° BTDC (rotor) and exhaust port to open at 72° ATDC (rotor). These timings were fixed as design parameters for satisfactory running. The other end timings were arranged for a minimum valve overlap period by making the ports narrow in the rotational sense.

Intake and exhaust ports are split into two passages within the rotor housing by a bridge piece giving column strength to the rotor housing. Each individual port passage within the housing also reduces in area by about 20% in a direction towards the engine in the interests of stable flow characteristics.

Fuel Injector and Control System

The fuel injector nozzles are flush mounted, the injection spray pattern having multi sprays with a restricted angle (shower head type) to prevent spray interference between the two adjacent injectors. A distributor type of injection pump injects into two fuel lines, each line is then divided for connection to the two injectors per bank.

Dual injectors per rotor bank were chosen so as to ensure satisfactory torque output through the speed range.

Auxiliary Drives

Fig. 26 shows the installation layout of the auxiliaries. Fuel injection pump and ignition distributor are conveniently positioned close to the combustion chamber. Both these units are driven by a toothed belt tensioned by a jockey pulley. Toothed belts are light, inexpensive, accurate and quiet.

The alternator and water pump are driven by twin V belts and the air conditioning unit by a single V belt. All the above drive systems are taken from the front of the engine.

The oil pump is driven by an internal gear system, the final drive also used to drive the hydraulic pump which is external to the engine.

Detail Points

Eccentric Shaft Bearings - Bearing loadings were calculated to cover gas loads only. The loading of the bearing at the eccentric shaft/end rotor housing was calculated at 373 bar (5400 lbs/in^2) as being equivalent to the maximum loading with one bank firing neglecting the small effect of the second non-firing bank. Bearing pressure of the eccentric shaft/rotor was 248 bar (3600 lbs/in^2).

Conventional thin-walled bearing liners are proposed for the latter bearings. An intermediate bearing within the dividing rotor housing was considered unnecessary because of the high stiffness of the eccentric shaft.

Rotor - Material: cast iron for good hot strength and low thermal expansion. I-beam type internal structure with thin internal ribs gives only a small sacrifice of weight in comparison to aluminium. Oil cooled.

Apex seals - Designed like an I-beam (material containing about 50% C and 50% Al) so gases can activate the seal laterally instantaneously and so reduce the time lag for good sealing. There is normally a time lag between the increase in the combustion chamber gas pressure and the gas pressure under the apex seal. It is thought that this will result in less 'chatter', higher combustion pressures, lower fuel consumption and lower emissions than the conventional design of seals.

Oil is metered into the combustion chambers, to aid sealing, by its addition into the gasoline at the fuel injection pump. This oil should be ash-free to prevent catalyst poisoning and minimise engine deposits.

Rotor Housing - Aluminium casting with chromium plated epitrochoid surfaces for optimum wear and sealing properties with apex seals.

Rotor housing assembly is rigidly constrained by 15 through bolts. Rotor end housings are also aluminium castings.

Water Circuit

The Water pump is mounted on the front rotor housing discharging coolant into the multi-pass axial flow coolant system. The multi-pass forced coolant flow is matched to the circumferential variation of heat input, the initial cold water passes are adjacent to the hottest regions, i.e. coincident to the firing/expansion rotor position.

The internal ribbing structure of the rotor housings through which the coolant flows, i.e. the ties between the inner and outer shells, are also multi-directional to reduce thermal distortions and over-stressing of the trochoid surface.

Category 2

(4) V-8, Turbocharged - TCCS Engine - Secondary Emission Target

Bore	101 mm	3.96 in
Stroke	92 mm	3.64 in
Bore/Stroke Ratio	1.087	
Displacement	5.87 L	358 in^3
Compression Ratio	9:1	
Power	135 kW at 66.7 rev/s	181 bhp at 4000 rev/min
BMEP	6.9 bar	100 lbf/in
Max. BMEP	9.0 bar at 41 rev/s	131 lbf/in^2 at 2450 rev/min
Max. Torque	423 Nm	312 lbf.ft
Torque Back-up	19%	
Power/Unit Displacement	23.0 kW/L	0.506 bhp/in^3
Max. Piston Speed	12.3 m/s	2430 ft/min

Max. Cylinder Pressure	71 bar	1030 lbf/in^2
Con-rod		
Distance between centres, L	152.4 mm	6 in
Ratio of L to crank throw (r), L/r	3.3	
Cylinder bore spacing	1.2 x cylinder bore	
Package		
Engine length	845	33.3 in
height	645 mm	25.4 in
width	630 mm	24.8 in
box volume	0.343 m^3	12.1 ft^3
weight	286 kg	630 lb

Predicted CVS-CH Results

Fuel Economy	14 miles/U.S. gallon
Fuel Consumption	16.74 L/100 km
HC) Baseline/Controlled	4.5/0.25 g/mile
CO)	12.0/1.0 g/mile
NO_x Controlled	0.33 g/mile
Estimated Noise	72.5 dBA

Predicted Performance, Economy, Emissions and Noise

If a naturally aspirated TCCS engine were to meet the secondary NO_x emission target of 0.4 g/mile with EGR and combustion retard, then an engine swept volume greater than 7.4 litre (450 in^3) would be required. An engine of this size would be unacceptable on the grounds of weight and size. A turbocharged TCCS engine of 5.87 litre capacity was considered to be a more promising approach.

Exhaust gases cannot be re-cycled from or to any points between the engine and turbocharger without affecting the mass flow and efficiency of the turbocharger. The gases must be extracted downstream of the turbine and re-cycled upstream of the compressor such that the compressor passes a mixture of exhaust gas and air, whose properties are not significantly different from those of air alone. Therefore, the standard procedures for estimating turbocharger engine performance were applied and the calculated boost density variation throughout the engine speed range is shown in Fig. 28.

Since a gulp factor of unity occurs at the same engine speed as in the previous turbocharged in-line 6 TCCS engine, the volumetric efficiency will be the same. In addition, assuming that the ISFC and smoke limited air/fuel ratio

are not affected by engine size, and that the turbocharger can be linearly scaled to a larger engine, specific performance will be identical with the previous turbocharged engine at its optimum settings.

One final problem remained, that of estimating the performance reduction due to EGR and combustion retard. The only available data published by Texaco concerns rear wheel torque at one engine speed. For a naturally aspirated sub-compact car, rear wheel torque was reduced by 31% as the engine was de-tuned from maximum economy to 0.4 g/mile NO_x. In a similar exercise, a turbocharged L141 engine in a jeep suffered a 29% loss in torque. In the light of this information, it was assumed that the turbocharged engine would experience a 31% torque loss over the complete speed range, due to EGR and retard. Engine swept volume was increased by 41% over the primary target engine, to compensate for this torque loss, resulting in an engine size of 5.87 litre (358 in^3).

A further requirement for this engine is that it should be capable of following the CVS-CH driving cycle in the test car with the EGR operating. Calculations showed that for typical vehicle gearing, the car required 36.4 kW (49 bhp) at 22.5 rev/s (1350 rev/min) to meet the maximum acceleration rate of the CVS trace (at the 193 second point), within the specified tolerance. The predicted engine met this requirement, Fig. 29. It is clear that road performance at full throttle, when the EGR is modulated to zero rate, will be more than adequate.

Two catalysts fitted in series are recommended to control the HC and CO emissions. High rates of EGR will be required probably in the region of 25% over much of the engine load/speed range, reducing to about 11% EGR during the maximum acceleration conditions met during the CVS-CH test. EGR will be modulated to zero rate at full load.

The high rates of EGR will increase the engine HC emissions but this increase will be offset by the higher exhaust gas temperatures to give extra manifold oxidation plus improved catalyst efficiency. It is possible that the higher exhaust gas temperatures could make a thermal reactor a feasible solution together with a single catalyst. However, the lower cost of having two common exhaust system components, i.e. two catalysts, has been preferred.

Catalyst efficiency and its durability factor should be satisfactory for 25,000 mile periods with a reasonable safety margin.

The NO_x emission control by EGR to achieve 0.40 g/mile is the most critical aspect since the flame formed NO_x is not significantly reduced by EGR (Ref. G1 Blumberg). There is therefore a certain minimum NO_x mass emission which increases with engine capacity, and also the mass flow of air through the engine. This point is particularly critical for unthrottled engines.

Design Notes

Fig. 30 shows the installation drawing which is similar, apart from increases in size and the addition of the turbocharger, to that of the naturally aspirated V-8 TCCS engine.

The five cylinder head stud pattern was adopted as for the latter V-8, which when combined with the proposed inlet ports gave cylinder centres at 1.2 x cylinder bore.

Manifold Arrangement

Cross flow porting was arranged as for the previous V-8 TCCS configuration with inboard inlet manifolds and outboard exhaust manifolds. The best solution for turbocharging was thought to be with a single turbocharger mounted at the rear of the engine banks with the compressor outlet discharging directly into the centrally placed plenum chamber. Several other arrangements involving both single and dual turbochargers were considered, but all had disadvantages.

Combustion System and Breathing Considerations

Most of the non-dimensional valve and camshaft dimensions were retained from the previous engines, but the piston cup diameter was reduced to 50% of the bore. This was considered to be justifiable because of the slightly larger bore size of this engine. It was found that the previously proposed Ricardo helical port for the TCCS engine then gave a higher swirl level than that which was strictly necessary. However, average diesel helical ports would not give sufficient swirl performance. Using rig swirl measurements from each of these port types, a hypothetical port was derived with a performance mid-way between these types. This port not only met the swirl requirements; but also allowed some latitude for shorter stroke engines, which improved the volumetric efficiency. The important engine breathing parameters were:-

Valve lift/inner seat diameter	28%
Inner seat diameter/cylinder bore	38.5%
Inlet valve opening period	232°
Average co-efficient of flow for hypothetical port (Texaco definition)	0.259
Average non-dimensional rig swirl (Texaco definition)	0.225
Swirl at end of induction	3.2 x engine speed
Swirl at TDC	8.0 x engine speed
Unity gulp factor	5000 rev/min

Fuel Injector and Control System

As for previous V-8 TCCS engine configuration

Auxiliary Drives

Follow those proposed for previous V-8 TCCS engine.

ENGINE CONFIGURATIONS WITHIN CATEGORY 3

The MAN-FM combustion system was chosen for application to the configuration study in view of its economy potential combined with low exhaust emissions. Even so, this system has not yet been developed for automotive applications.

One engine build, a V-8, 5.05 L, has been schemed to meet the primary emission target but no engines were schemed for the secondary emission target. To achieve the secondary emission target EGR would be necessary and insufficient published data was available to establish the effectiveness of applying EGR, or the penalties involved.

Category 3

V-8, Naturally Aspirated - MAN-FM Engine - Primary Emission Target

Bore	93 mm	3.66 in
Stroke	93 mm	3.66 in
Bore/Stroke Ratio	1.0	
Displacement	5.05 L	309 in^3
Compression Ratio	15:1	
Power	96 kW at 66.7 rev/s	128 bhp at 4000 rev/min
BMEP	5.7 bar	82.5 lbf/in^2
Max. BMEP	7.4 bar at 33 rev/s	107 lbf/in^2 at 1980 rev/min
Max. Torque	298 Nm	219 lbf.ft
Torque Back-up	24.6%	
Power/Unit Displacement	19.0 kW/L	0.414 bhp/in^3
Max. Piston Speed	12.4 m/s	2440 ft/min
Max. Cylinder Pressure	70 bar	1015 lbf/in^2
Con-rod		
Distance between centres, L	156 mm	6.14 in
Ratio of L to crank throw (r), L/r	3.36	
Cylinder bore spacing	1.2 x cylinder bore	
Package		
Engine length	745 mm	29.3 in
height	643 mm	25.3 in
width	640 mm	25.2 in

box volume	0.307 m^3	10.8 ft^3
weight	300 kg	660 lb

Predicted CVS-CH Results

Fuel Economy	19.0 miles/U.S. gallon
Fuel Consumption	12.3 L/100 km
HC)) Baseline/Controlled	0.8/0.3 g/mile
CO)	8.0/0.8 g/mile
NO_x Controlled	1.0 g/mile
Estimated Noise	72 dBA

Predicted Performance, Economy, Emissions and Noise

The engine swept volume was calculated to be 5.05L (309 in^3) to achieve the target performance. Performance predictions were based on extrapolation of the MAN published data on FM engines operating on gasoline.

Insufficient data was available to indicate the smoke limited performance throughout the engine speed range and the full throttle air/fuel ratio was therefore limited to 18.7 throughout the speed range; this corresponds to Bosch No. 1 to No. 1.5. The published values of indicated specific fuel consumption, based on the results from several FM engines, were therefore adjusted to give the indicated specific air consumption when smoke limited.

The prediction of volumetric efficiency was not possible from published FM data and had to be made by extrapolation of Ricardo 'in house' information on the performance of high swirl inlet ports in larger bore (truck size) engines. Imep was calculated from the indicated specific air consumption and volumetric efficiency, then brake performance was obtained by taking the friction levels shown in Fig. 3.10 into account.

The estimated performance curve for this engine is shown in Fig. 31. Analysis of typical FM test bed bsfc curves indicates that the estimated fuel consumption of the test vehicle should be excellent during the CVS-CH emission test cycle. The moderate CR of 15 also contributes to good economy.

A single oxidising catalyst must be fitted underneath the vehicle floor and as close to the engine as possible. Low thermal inertia exhaust manifolds are also recommended. Catalyst durability should not be problematic for a period of 25,000 miles since the uncontrolled engine emissions of HC will be comparatively low at about 0.8 g/mile. Furthermore there should not be a durability problem in holding the NO_x emission to within the primary emission target since no EGR is necessary.

Design Notes (Figs. 32, 33, 34)

The choice of a bore/stroke ratio of 1 was made in the interests of compactness since this was the highest bore/stroke ratio recommended by MAN. Furthermore, from the design point of view it gave a compromise between noise,

breathing and engine height.

The major dimensions, design and rigidity of the crankcase and crankshaft lie between conventional gasoline and diesel engine practice since the maximum cylinder pressures are higher than for gasoline engines but not quite at diesel engine levels. Cylinder centres resulted at 1.2 x cylinder bore.

An overhead camshaft arrangement was considered to offer considerable advantages over a pushrod design in terms of cylinder head simplicity and available space within the head for locating the high swirl inlet port required for this combustion system. The resulting complexity of the front end timing and auxiliary equipment drives, together with the engine length penalties incurred, were however considered unsuitable features for passenger car application. A single camshaft and pushrod design was therefore adopted.

Cylinder Head and Manifold Arrangement

This was Cross-flow porting with an inboard inlet manifold and employing high swirl type inlet ports. A four cylinder head stud pattern was considered to give the best head layout.

Fuel injectors are placed on the inboard side together with pushrods and inlet ports. Spark plugs and exhaust ports are placed on the outboard side. The spark plugs are retained by the use of screwed sleeves and the injectors via clamps.

Combustion System and Breathing Considerations

The combustion chamber bowl is located within the piston crown and is offset from the bore centre by 4.5 mm (equivalent to 0.0458 x cylinder bore). The relative positions of the injector and spark plug are essentially to MAN requirements on opposite sides of the piston bowl, see Fig. 33. Conventional ignition equipment and long electrode spark plugs are used.

The inlet valve inner seat diameter is 38.5 mm, about 41.4% of the bore, which gives a mean inlet gas velocity of about 72 m/s (236 ft/sec) at the rated speed.

Fuel Injector and Control System

The fuel injector is a single hole type which is similar to that fitted to direct injection diesel engines. It has a single offset spray directed at the adjacent wall of the piston cavity. Ricardo have installed the nozzle into an injector body of 17 mm diameter as in some recent diesel engine design practice.

A gear driven rotary injection pump is positioned between the engine banks at the front.

Auxiliary Drives

The camshaft, fuel injection pump and hydraulic pump are driven by an internal gear system. Gear drives give good reliability and accuracy of timing over long periods with low noise. The distributor is skew-gear driven off the camshaft and is mounted in the vee at the rear of the engine.

Twin V-belt drives are used for the alternator and water pump and a single

V-belt for the air conditioning unit. A conventional skew gear drive is used for the oil pump.

ENGINE CONFIGURATIONS WITHIN CATEGORY 4

The VW combustion system was chosen for application to the configuration study since, at the time of writing, it was the only one which had been tested in multi-cylinder form and for which performance results were available. More recently the Porsche system has been tested in multi-cylinder form, however performance data is still not sufficient to warrant a configuration study.

The same engine V-8 configuration of 3.67L was schemed to achieve both the primary and secondary emission targets. Low NO_x emissions were achieved from the secondary engine by applying EGR.

Category 4

(1) V-8, Naturally Aspirated - VW Engine - Primary Emission Target

Bore	86 mm	3.39 in
Stroke	79 mm	3.11 in
Bore/Stroke Ratio	1.1	
Displacement	3.67 L	224 in^3
Compression Ratio	8.5:1	
Power	96.5 kW at 75 rev/s	129 bhp at 4500 rev/min
BMEP	7.1 bar	103 lbf/in^2
Max. BMEP	7.8 bar at 66 rev/s	113 lbf/in^2 at 3960 rev/min
Max. Torque	228 Nm	168 lbf.ft
Torque Back-up	9.8%	
Power/Unit Displacement	26.3 kW/L	0.576 bhp/in^3
Max. Piston Speed	11.8 m/s	2330 ft/min
Max. Cylinder Pressure	58.6 bar	850 lbf/in^2
Con-rod		
Distance between centres, L	148.8 mm	5.7 in
Ratio of L to crank throw (r), L/r	3.67	
Cylinder bore spacing	1.17 x cylinder bore	
Package		
Engine length	763 mm	30.05 in
height	610 mm	24.0 in
width	610 mm	24.0 in

box volume	0.284 m^3	10.0 ft^3
weight	250 kg	550 lb

Predicted CVS-CH Results

Fuel Economy	16.5 miles/U.S. gallon
Fuel Consumption	14.2 L/100 km
HC) Baseline/Controlled	1.8/0.23 g/mile
CO) Baseline/Controlled	8.0/0.8 g/mile
NO_x Controlled	1.0 g/mile
Estimated Noise	73 dBA

Predicted Performance, Economy, Emissions and Noise

The engine swept volume necessary to achieve the target vehicle performance was calculated to be 3.67L (224 in^3). Performance prediction for the configurated engine was made by extrapolation of the published data from the 4 cylinder VW stratified charge engine.

The method adopted for the extrapolation of data from the original VW engine, was first to determine the gulp factor and volumetric efficiency. Then the friction losses (assumed to be equivalent to a standard gasoline engine) were added to the published bmep in order to obtain the imep. Finally, the ratio of imep divided by volumetric efficiency was plotted against engine speed.

The proposed bore/stroke ratio of 1.1 is lower than the original VW engine which has a bore/stroke ratio of 1.24, therefore the proposed engine bmep could not be the same as for the original VW engine. In this case Ricardo assumed that the variation of the ratio imep/volumetric efficiency was the same for both engines throughout the speed range. The proposed engine imep was then calculated, having first predicted the volumetric efficiency by the gulp factor procedure. Brake performance was finally obtained by subtracting the standard gasoline engine friction losses. In order to arrive at the correct engine capacity and performance, a step by step procedure had to be adopted, making, as the first step an approximation of the capacity, then reiterating the calculation until the target horse-power was achieved.

The estimated performance curve of this engine is shown in Fig. 35. It can be seen that peak torque is developed at a high engine speed, however in practice this is not significant since the torque curve is virtually flat between 40 rev/s and 67 rev/s.

To control the engine HC and CO emissions, a large oxidising catalyst is recommended, so that a durability of at least 25,000 miles can be achieved. Low thermal inertia exhaust manifolds are also recommended, leading to the catalyst underneath the vehicle floor.

The engine emissions of NO_x will be within the primary target without EGR. No special durability problems of NO_x control are envisaged.

Design Notes (Figs. 36, 37, 38)

The choice of a bore/stroke ratio of 1.1 instead of the standard VW bore/stroke ratio of 1.24 was made because the smaller bore should give better combustion (lower emissions) and adequate breathing without increasing engine height significantly. Furthermore engine noise will be lower. A C.R. of 8.5:1 was used, common to VW.

The engine lower end follows conventional gasoline engine practice as does the cylinder bore spacing at 1.17 x cylinder bore which was controlled by the casting core thickness of the water jacket between bores.

Cylinder Head and Manifold Arrangement

The inboard inlet manifold and outboard exhaust manifold give cross-flow porting with a single throttle as for all previous V-8 configurations. To give satisfactory spark plug and fuel injector accessibility, the pre-chamber had to be positioned on the outboard side and not inboard where otherwise it would be preferred. The ports pre-chamber and pushrods could not all be accommodated on one side. The fuel lines and spark plug wires are therefore unavoidably long and also the fuel injectors determine the engine width, Fig. 38. The exhaust ports were unswept in order to reduce pre-heat to the fuel injectors, see Fig. 37.

A four cylinder head stud pattern and conventional rocker gear have been used. The cylinder head has been designed to employ the minimum number of machining operations commensurate with the complexity of the VW system.

Combustion System and Breathing Considerations

The combustion system is based on the VW system with a pre-chamber volume of about 20% of the total clearance volume. The throat area was calculated from the relationship (see Part 2 of Report).

$$\frac{\text{vol. pre-chamber}}{\text{area throat}} = \frac{(1 - F)}{(CR)^{\gamma-1}} = 7 \text{ cm}$$

$$\text{where } F = \frac{\text{vol. pre-chamber}}{\text{clearance volume}}$$

The transverse plane on the cylinder bore centre runs through the centre of the pre-chamber and its throat. Fig. 37 shows the combustion chamber, spark plug and injector layout and relative positions which are identical to the VW system. The pre-chamber injector and spark plug are arranged in sequence in the flow direction so that the spark plug receives a pre-prepared mixture.

In order not to overcool the combustion faces of the pre-chamber (critical for HC emissions), a controlled amount of air cooling by means of fins has been used in preference to water cooling.

The inlet valve inner seat diameter is 34.1 mm or 39.6% of the bore. This gives a mean inlet gas velocity at maximum speed (74.5 rev/s) of 76 m/s.

Fuel Injector and Control System

A fully mechanical injection pump supplies the fuelling necessary to both the pre-chamber and inlet port injectors. A camshaft operates the injection plungers

and is gear driven from the camshaft. The injection pump is based on the system by Schäfer fitted to the VW pre-chamber engine. It contains 12 cams operating 16 injector plungers and uses components from standard fuel injection equipment. The pump shown is basically an in-line pump but with offset injection lines to give short length. A 90° V12 pump layout for even shorter length was investigated but could not be installed because of interference with the front of the inlet manifolds.

Injectors for the pre-chamber are controlled separately, one per cam (8 cams in total), whereas those for the intake port are supplied in pairs from a single cam (4 cams in total).

Pre-chamber injection quantities are fixed at 2 mm^3/stroke with an optimum end of injection stroke of 70 deg crank angle b.t.d.c. The fuel delivery into the intake port is varied by a spatial cam having a pre-determined contour with the parameters speed and load. A control box containing the spatial cam is fitted adjacent to the front four intake port injection lines on the injection pump and the fuelling delivery is varied by means of the conventional helix 'cut off'/rack method. The spatial cam is positioned by engine speed and intake manifold depression.

The nozzle is a single hole type with an opening pressure of 25 bar, and injects a spray with about 20° offset. Port injectors have the same opening pressure and spray a cone envelope of fuel directly onto the back of the inlet valve. A secondary injector is included in the intake manifold for cold starts.

Auxiliary Drives (Fig. 36)

Camshaft, fuel injection pump and hydraulic pump are gear driven from the front of the crankshaft. Twin V-belt drives are used for the alternator and water pump and a single V-belt for the air-conditioning unit. A conventional skew gear drive is used for the oil pump and the distributor is skew gear driven from a gear on the camshaft nose.

Category 4

(2) V-8, Naturally Aspirated - VW Engine - Secondary Emission Target

Engine Specification Identical To Previous VW Engine

Predicted CVS-CH Results

Fuel Economy	15.5 miles/U.S. gallon
Fuel Consumption	15.13 L/100 km
HC)) Baseline/Controlled	2.5/0.28 g/mile
CO)	12.0/1.0 g/mile
NO_x Controlled	0.35 g/mile
Estimated Noise	73 dBA

Predicted Performance, Economy, Emissions and Noise

The performance prediction was identical to that used for the previous VW engine and the same engine build is proposed. Because this stratified charge engine inherently gives low NO_x emissions, it is unnecessary to penalise the engine performance by the addition of EGR at the maximum loads of the CVS test. The EGR is only used at part load conditions. The estimated performance curve is shown in Fig. 35 as all the performance specifications are identical to the previous configuration.

Two oxidising catalysts fitted in series will be necessary to control the HC and CO emissions and EGR to control the NO_x emissions. Emission control durability should be satisfactory for intervals of at least 25,000 miles. The addition of EGR causes a small penalty in Fuel consumption.

Since VW have not attempted to meet the secondary target with this combustion system, the proposition that performance will not deteriorate is speculative.

Design Notes

Identical to previous VW V-8 configuration shown in Figs. 36, 37 and 38.

ENGINE CONFIGURATIONS WITHIN CATEGORY 5

The most developed variant of the 3-valve stratified charge engine is the Honda CVCC. It is the only system in volume production for automotive applications and was therefore the obvious choice for the configuration study. One engine build has been schemed to meet the primary emission target:-

(1) V-8, 4.28L, CVCC engine

Also, one engine build has been schemed to meet the secondary emission target:-

(2) V-8, 5.58L, CVCC engine

Category 5

(1) V-8, Naturally Aspirated - CVCC Engine - Primary Emission Target

Bore	88 mm	3.46 in
Stroke	88 mm	3.46 in
Bore/Stroke Ratio	1.0	
Displacement	4.28 L	260 in^3
Compression Ratio	7.9:1	
Power	97.5 kW at 73.5 rev/s	130.5 bhp at 4400 rev/min
BMEP	6.25 bar	90.5 lbf/in^2
Max. BMEP	7.9 bar at 35 rev/s	115 lbf/in^2 at 2100 rev/min
Max. Torque	268 Nm	197 lbf.ft
Torque Back-up	26.4%	
Power/Unit Displacement	22.8 kW/L	0.502 bhp/in^3
Max. Piston Speed	12.9 m/s	2540 ft/min
Max. Cylinder Pressure	58.6 bar	850 lbf/in^2
Con-rod		
Distance between centres, L	148.6 mm	5.85 in
Ratio of L to crank throw (r), L/r	3.38	
Cylinder bore spacing	1.22 x cylinder bore	
Package		
Engine length	761 mm	29.96 in
height	660 mm	25.99 in
width	642 mm	25.28 in

box volume	0.322 m^3	11.4 ft^3
weight	250 kg	550 lb

Predicted CVS-CH Results

Fuel Economy	16.8 miles/U.S. gallon
Fuel Consumption	13.95 L/100 km
HC Controlled	0.2 g/mile
CO Controlled	2.7 g/mile
NO_x Controlled	1.3 g/mile
Estimated Noise	73 dBA

Predicted Performance, Economy, Emissions and Noise

The starting point for performance calculation was to calculate the ratio of imep to volumetric efficiency for the Honda, 1.5L CVCC engine, and a 5.73L CVCC engine. Imep was calculated from the published bmep and an estimated fmep was added. The friction losses of a standard gasoline engine were assumed, with a small addition (.035 bar) for the extra valve gear.

A proposed V-8 engine of 4.26L and bore/stroke ratio of 1 will achieve the target brake performance. In the calculation, the ratio of imep to volumetric efficiency is kept equal to that of the Honda engine at the same piston speeds. Volumetric efficiency of the proposed engine was predicted by the same method as for the Honda engine and thus the imep was estimated. Brake performance was therefore obtained using the same friction losses as above and Fig. 39 shows the resulting power and torque curves.

A thermal reactor has been fitted in between the engine banks to give a compact system which is ideal for exhaust treatment. The lowest exhaust emissions from a V-8 3 valve engine have been obtained with this configuration (see literature survey). Carburettor pre-heating, an inherent requisite of the CVCC engine, is obtained by arrangement of the carburettor to sit on top of the thermal reactor, see Fig. 42. No catalyst or EGR will be necessary for the primary emission target.

Emissions durability of this vehicle should be acceptable for 50,000 miles although it is dependent on the physical integrity of the thermal reactor. Since there is no catalyst, the engine fuel can be either leaded or a leaded gasoline.

Design Notes (Figs. 40, 41, 42)

A bore/stroke ratio of 1 was chosen for the purpose of obtaining adequate breathing without compromising engine height. The Honda CVCC engines use bore/stroke ratio ranging from 0.85 to 1.15. A compression ratio of 7.9:1 is used, common to the Honda engine.

The engine installation drawing, Fig. 40, shows the engine package. Cylinder centres at 1.22 x cylinder bore were controlled by the cylinder head layout to accommodate the extra valve and its rocker gear. An overhead camshaft was also

found to be necessary.

Combustion chamber geometry was based on the Honda conversions of their 1.5L engine and one American V-8 engine, the Impala.

Cylinder Head Layout

A thermal reactor between the engine banks was chosen as the optimum position for the V-8 configuration. This determined that the cylinder head porting should be uni-sided with inboard inlet and exhaust ports and also that the auxiliary valve assembly/pre-chamber should be in the remaining space on the outboard side. A cross drilling is used to supply the mixture charge to the auxiliary chamber, as indicated in Fig. 41.

An overhead camshaft was found to be the best solution to operate the required valve gear of the CVCC system. Insufficient space was available for the conventional inboard push rod arrangement due to the space occupied by having inboard inlet and exhaust ports. Two outboard camshafts with outboard push rods was one alternative but the overhead camshaft was chosen for greater cylinder head simplicity, reduced cylinder head width and with only a marginal sacrifice in engine height.

The camshaft has three cam lobes per cylinder with rocker followers to each of the three valves. The rockers operate on the valves via rollers which give low side thrust, low wear and also lower engine height compared to the standard screw type adjustors. Tappet clearances are adjusted by means of an eccentric adjustment on the bearings of the rollers which can be locked in position.

Exhaust port liners have been fitted into the cylinder head for insulation in the interests of maintaining high exhaust gas temperatures.

Manifold Layout

The exhaust manifold assembly, designed as a thermal reactor, has a cast iron outer shell with a stainless steel fabricated inner construction, as shown in Fig. 42.

There is a split line (now shown) in the cast iron shell to allow for installation of the internal components. Exhaust gas from the engine is diverted into the inner concentric tube, the gases then flow towards the front of the engine, out through an open end and finally are channelled to the rear exit through the circular gap between the inner and outer steel shells.

The volume of the total thermal reactor is greater than the engine displacement and this should result in satisfactory exhaust gas residence time for HC and CO oxidation when combined with the high gas temperatures.

The exhaust gas exit from the rear end of the reactor is angled to direct the exhaust pipe for its passage between the rear of the left hand bank and the vehicle bulkhead. Consideration of space and suitable insulation because of the close proximity to the bulkhead will have to be made to accommodate this proposed position of the exhaust pipe to sweep over the top of the left hand bank rocker cover. Neither of these exhaust pipe arrangements have been indicated in the installation package size.

The carburettor supplies two different mixture charges, one a rich charge to

the pre-chamber and the other a weak charge to the cylinder. A hot spot from the inner concentric shell of the thermal reactor ensures that both charges are vaporised before dividing between the runners. Exhaust gas heats the und rside of the manifold evaporative floor.

Combustion System and Breathing Considerations

The combustion system is based on the Honda CVCC engine. Pre-chamber volume was arranged to be about 9% of the total clearance volume and the ratio of throat area divided by pre-chamber volume was 0.1 cm^{-1}. A thimble type of auxiliary chamber unit is used, the outlet orifice of the thimble being the throat. The spark plug is in a position to avoid direct fuel or charge impingement.

Inlet ports are designed for high volumetric efficiency, there being no necessity for organised swirl. The inlet valve inner seat diameter is 36.1 mm, about 41% of the bore, which gives a mean inlet gas speed of 76.8 m/s at 73.5 rev/s.

Auxiliary Drives (Fig. 40)

Both overhead camshafts are driven by a single toothed belt, the back of which is poly-V form and is used to drive the water pump. The water pump is mounted on adjustable feet to the engine and is used as the tensioner.

A single V-belt drives the air conditioning unit and a twin V-belt drives the alternator and hydraulic pump. A chain from the crankshaft drives an intermediate gear from which a skew driven shaft drives both the distributor and oil pump.

The complexity of the front end drive systems on this overhead camshaft engine is apparent. The proposed arrangement is not definitive since there are several feasible methods. Toothed belts for the camshafts are, however, considered the best solution in comparison to chain or gear driven camshafts.

Category 5

(2) V-8, Naturally Aspirated - CVCC Engine - Secondary Emission Target

Bore	96 mm	3.78 in
Stroke	96 mm	3.78 in
Bore/Stroke Ratio	1.0	
Displacement	5.56 L	340 in^3
Compression Ratio	7.9:1	
Power	121 kW at 66.7 rev/s	162 bhp at 4000 rev/min
BMEP	6.5 bar	94.5 lbf/in^2
Max. BMEP	7.9 bar at 33.5 rev/s	115 lbf/in^2 at 2000 rev/min
Max. Torque	350 Nm	258 lbf.ft
Torque Back-up	21.5%	

Power/Unit Displacement	21.8 kW/L	0.476 bhp/in^3
Max. Piston Speed	12.8 m/s	2520 ft/min
Max. Cylinder Pressure	58.6 bar	850 lbf/in^2
Con-rod		
Distance between centres, L	162.2 mm	6.39 in
Ratio of L to crank throw (r), L/r	3.38	
Cylinder bore spacing	1.22 x cylinder bore	
Package		
Engine length	795 mm	31.3 in
height	675 mm	26.58 in
width	674 mm	26.5 in
box volume	0.362 m^3	12.8 ft^3
weight	273 kg	600 lb

Predicted CVS-CH Results

Fuel Economy	15 miles/U.S. gallon
Fuel Consumption	15.63 L/100 km
HC Controlled	0.37 g/mile
CO Controlled	3.0 g/mile
NO_x Controlled	0.37 g/mile
Estimated Noise	73 dBA

Predicted Performance, Economy, Emissions and Noise

Published data indicate that the amount of EGR necessary to achieve the secondary NO_x target will produce an imep loss of about 15%. In order to offset this torque loss and so maintain the prescribed performance levels, means that the engine capacity must be increased from that used for the primary target to 5.56L (340 in^3), i.e. a capacity increase of about 30%.

Performance predictions were made, assuming the addition of 11% proportional EGR over the engine spectrum and at maximum load of the CVS-CH test, using the same method as described for the primary target CVCC engine. The imep of the Honda engine was first reduced by 15% in order to obtain the new ratio of imep to volumetric efficiency with the addition of EGR. The target power output of 96 kW (128 bhp) was met, with EGR, at 66.7 rev/s.

In practice, EGR will be reduced to zero rate at full throttle and therefore

the true power output will be that calculated without EGR. Performance curves presented in Fig. 43 show both conditions. Obviously the vehicle performance will be more than adequate since the maximum power is 121 kW (162 bhp) at 66.7 rev/s.

Emission control is achieved with an inboard thermal reactor as for the previous CVCC engine. EGR is recycled into the inlet system through a single pipe downstream of the carburettor. The quantity of EGR necessary to achieve 0.41 g/mile of NO_x is estimated to be 11% over the load range up to and including the maximum load condition of the CVS-CH test. EGR can be modulated to zero rate for all load conditions in excess of the latter.

It should be noted that because the HC and CO emissions are only marginally within the secondary target due to the effects of EGR, it may prove necessary, dependent on vehicle tests, for an oxidising catalyst to be fitted. However, no cost allowance has been included in this study to allow for this.

Emission durability of the HC and CO emissions will be difficult for periods in excess of 25,000 miles. Again, like the previous engine, the physical integrity of the thermal reactor is critical.

Design Notes

The design is identical but increased in size to the CVCC engine schemed to meet the primary emission target. Only an installation drawing, Fig. 44, is therefore presented to allow an assessment.

SUMMARY TABLE

			ENGINE SPECIFICATION					PACKAGE						PERFORMANCE			VEHICLE PERFORMANCE						EMISSION CONTROL		
	CATEGORY	EMISSION TARGET	BORE mm	STROKE mm	CONFIG-URATION	DISPLACE-MENT L	C.R.	LENGTH mm	HEIGHT mm	WIDTH mm	BOX VOLUME m^3	WEIGHT kg	COST $	POWER kW at rev/s	TORQUE Nm at rev/s	TORQUE BACKUP %	ECONOMY m/USgal	CONSUMPTION L/100 km	HC CONTROL / HC BASE	CO CONTROL / CO BASE	NOx	NOISE dBA	CATALYST	THERMAL REACTOR	EGR
GASOLINE V8	GASOLINE	PRIMARY	97	76	NA V8	4.5		NOT CONFIGURED				245	595	96 66.7	285 41.6	25	16	14.6	0.2 1.8	1.0 30.0	1.3	71	1 EXH. AIR INJ.		X
GASOLINE IL6	GASOLINE	PRIMARY	88	82	NA IL6	2.99		NOT CONFIGURED				204	598	96 83.0	232 50	20	17.4	13.5	0.2 1.8	1.0 30.0	1.3	73	1 EXH. AIR INJ.		X
PROCO V8	I	PRIMARY	87	87	NA V8	4.15	11.0	770	597	600	.275	250	741	96 66.7	292 38	19	18.7	12.5	0.15 1.0	1.0 8.0	1.4	71	1		X
PROCO IL6	I	PRIMARY	96	96	NA IL6	4.15	11.0	995	638	528	.335	263	664	96.5 66.7	293 37	26	18.4	12.75	0.15 1.0	0.8 8.0	1.3	75	1		X
PROCO V8	I	SECONDARY	94	94	NA V8	5.25	11.0	800	609	622	.303	259	827	122 66.7	365 40	13	16.5	14.2	0.25 2.5	0.8 12	0.37	72.5	2		X
TCCS V8	II	PRIMARY	95	95	NA V8	5.4	10.0	823	658	622	.337	273	811	96 66.7	280 29	23	17.0	13.8	0.3 2.5	1.5 10	0.8	70.5	2		X
TCCS IL6	II	PRIMARY	96	96	TC IL6	4.16	9.0	981	610	578	.346	260	827	96 66.7	298 42	15.4	17.0	13.8	0.22 2.0	1.5 10	0.8	71	2		X
CW ROTARY	II	PRIMARY			2 BANK ROTARY	5.5	8.5	523	660	695	.24	150	667	97 83	214 56	17.4	14.0	16.74	0.3 3.0	0.8 15	1.0	71	2		
TCCS V8	II	SECONDARY	101	92	TC V8	5.87	9.0	845	645	630	.343	286	985	135 66.7	423 41	19.0	14.0	16.74	0.25 4.5	1.0 12.0	0.33	72.5	2		X
MAN FM V8	III	PRIMARY	93	93	NA V8	5.05	15.0	745	643	640	.307	300	756	96 66.7	298 33	24.6	19.0	12.3	0.3 0.8	0.8 8.0	1.0	72	1		
VW V8	IV	PRIMARY	86	79	NA V8	3.67	8.5	763	610	610	.284	250	(EFI 764) 844	96.5 75	228 66	9.8	16.5	14.2	0.23 1.8	0.8 8.0	1.0	73	1		
VW V8	IV	SECONDARY	86	79	NA V8	3.67	8.5	763	610	610	.284	250	(EFI 819) 899	96.5 75	228 66	9.8	15.5	15.13	0.28 2.5	1.0 12.0	0.35	73	2		X
CVCC V8	V	PRIMARY	88	88	NA V8	4.28	7.9	761	660	642	.322	250	600	97.5 73.5	268 35	26.4	16.8	13.95	0.2 -	2.7 -	1.3	73		X	
CVCC V8	V	SECONDARY	96	96	NA V8	5.56	7.9	795	675	674	.362	273	670	121 66.7	350 39.5	21.5	15.0	15.6	0.37 -	3.0 -	0.37	73		X	X
DIESEL V8		PRIMARY	88	98	NA V8	4.78	20	758	604	692	.320	320	701	96 66.7	286 33.4	24.0	21.0	11.0	0.46 -	2.0 -	1.2	74			

RICARDO CONSULTING ENGINEERS

FIG. No. 1
DRG. No. D28875
DATE - 11.9.75

ESTIMATED PERFORMANCE CURVE FOR
Ø 97 x 76 mm V8 GASOLINE ENGINE
FOR PRIMARY EMISSION TARGET

BARE ENGINE A.I.T. 20°C BARO 760 mm Hg

ENGINE BUILD: CLOSE TOLERANCE SOPHISTICATED CARBURETTOR, MODULATED EGR, AIR INJECTION OXIDATION CATALYST

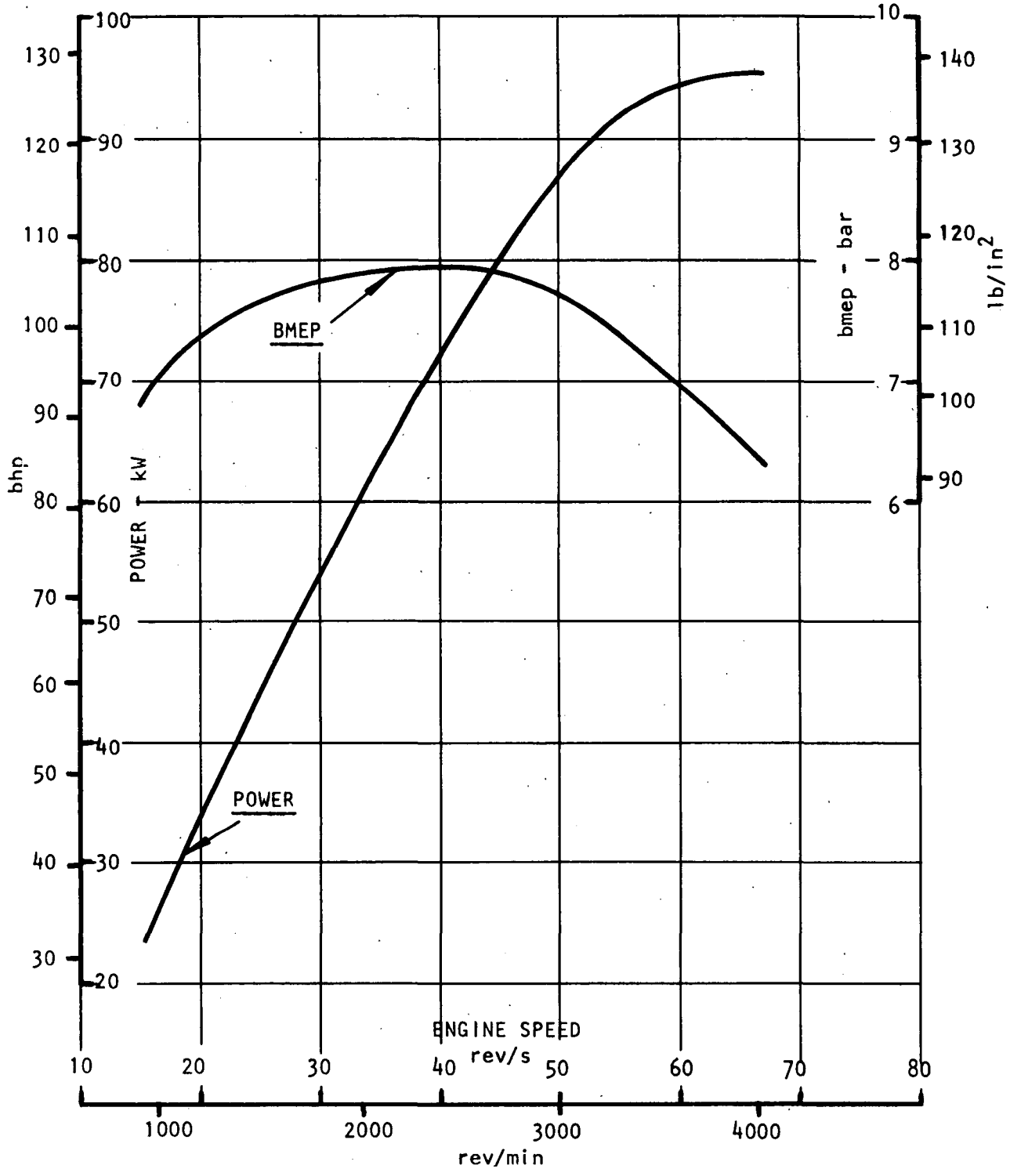

RICARDO CONSULTING ENGINEERS

FIG. No. 2
DRG. No. D28876
DATE :- 11.9.75

ESTIMATED PERFORMANCE CURVE FOR
Ø 88 x 82 mm 6 CYLINDER "EUROPEAN TYPE"
GASOLINE ENGINE FOR PRIMARY EMISSION TARGET

BARE ENGINE A.I.T. 20°C BARO 760 mm Hg

BUILD: PETROL INJECTION, MODULATED EGR, AIR INJECTION, OXIDATION CATALYST

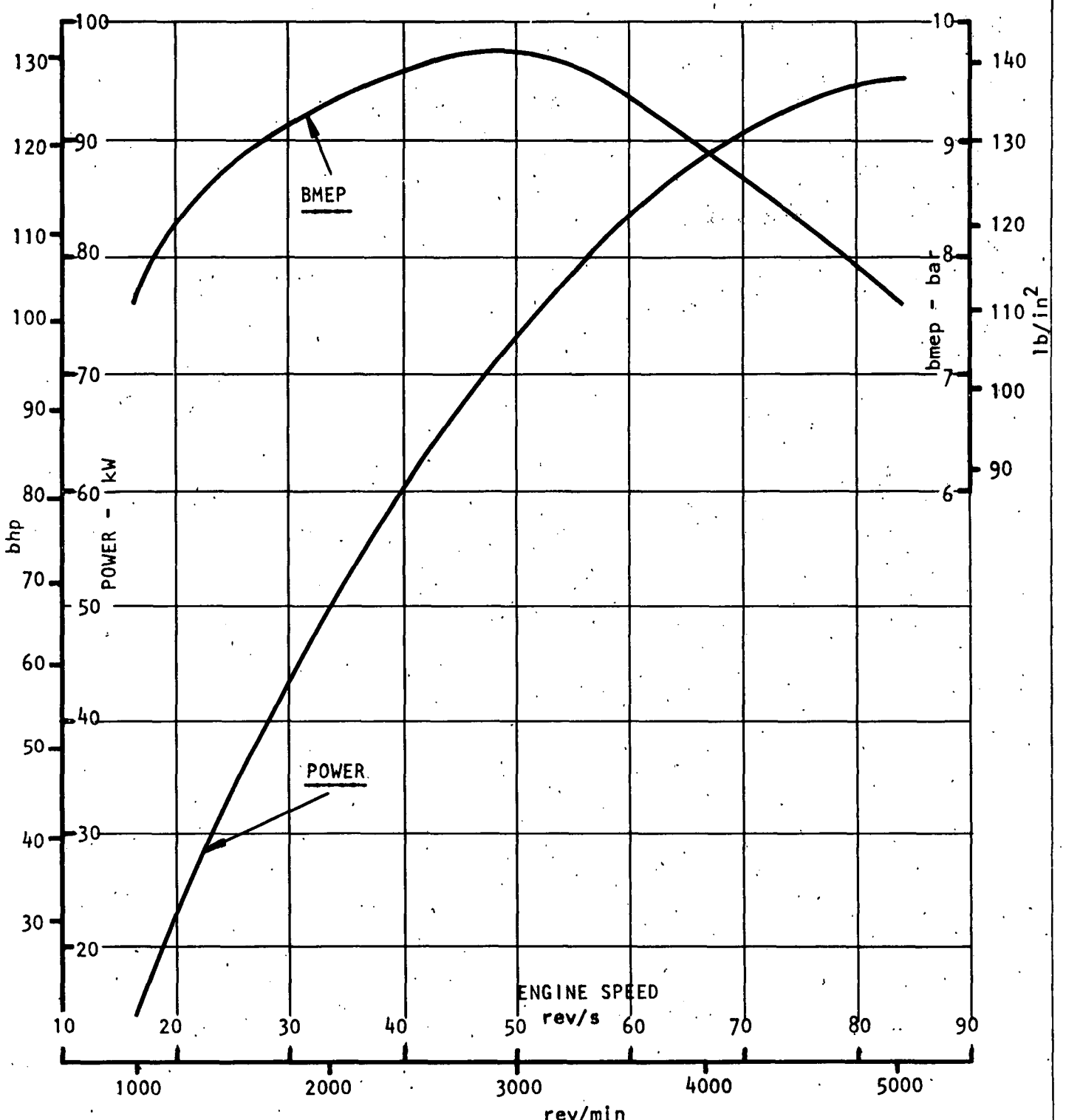

RICARDO CONSULTING ENGINEERS

FIG. No. 3
DRG. No. D28877
DATE :- 11.9.75

ESTIMATED PERFORMANCE CURVE FOR

Ø 87 x 87 mm V8 CONFIGURATION - CATEGORY 1

BARE ENGINE A.I.T. 20°C BARO 760 mm Hg

PRIMARY EMISSION TARGET PROCO COMBUSTION SYSTEM

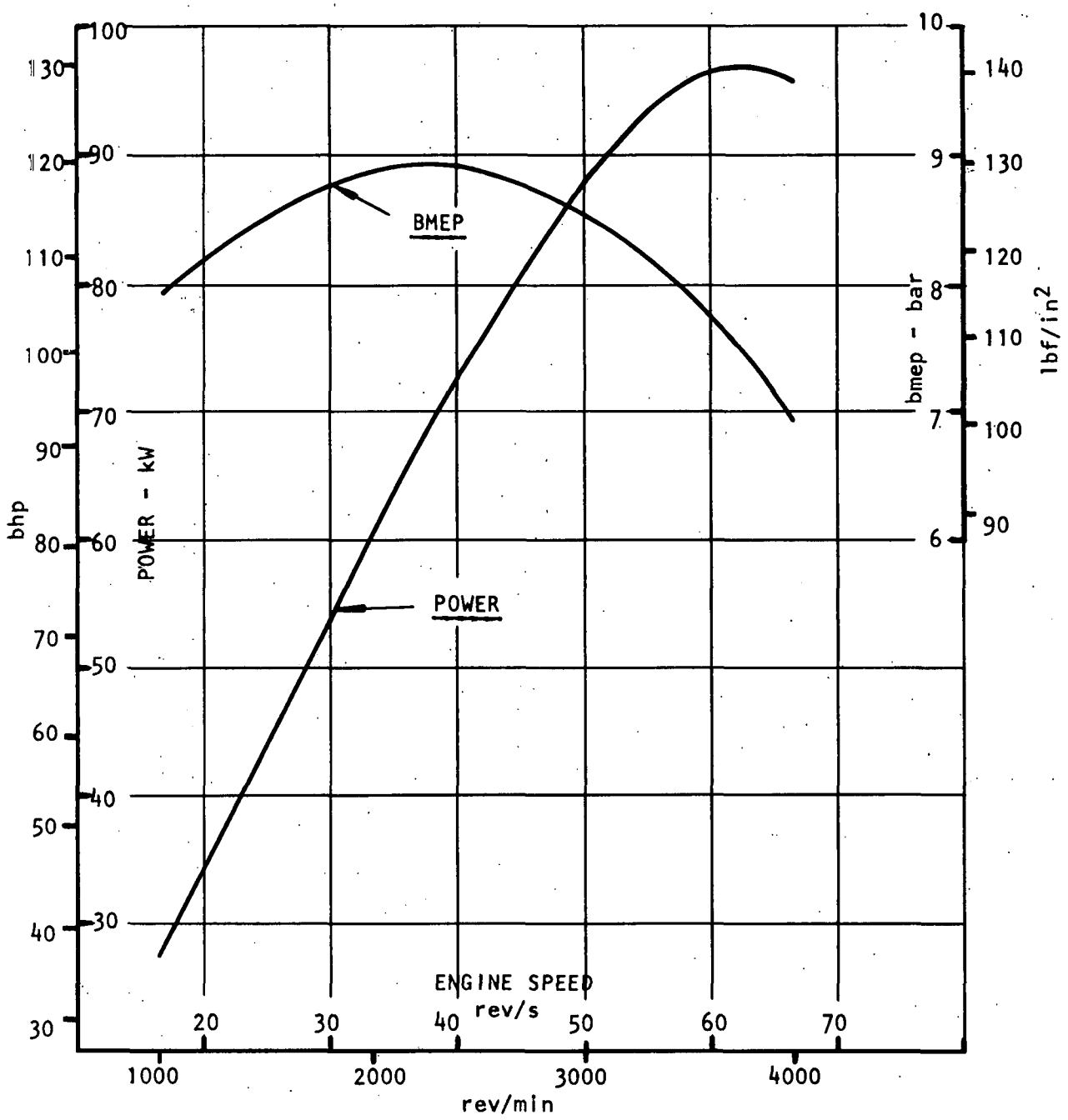

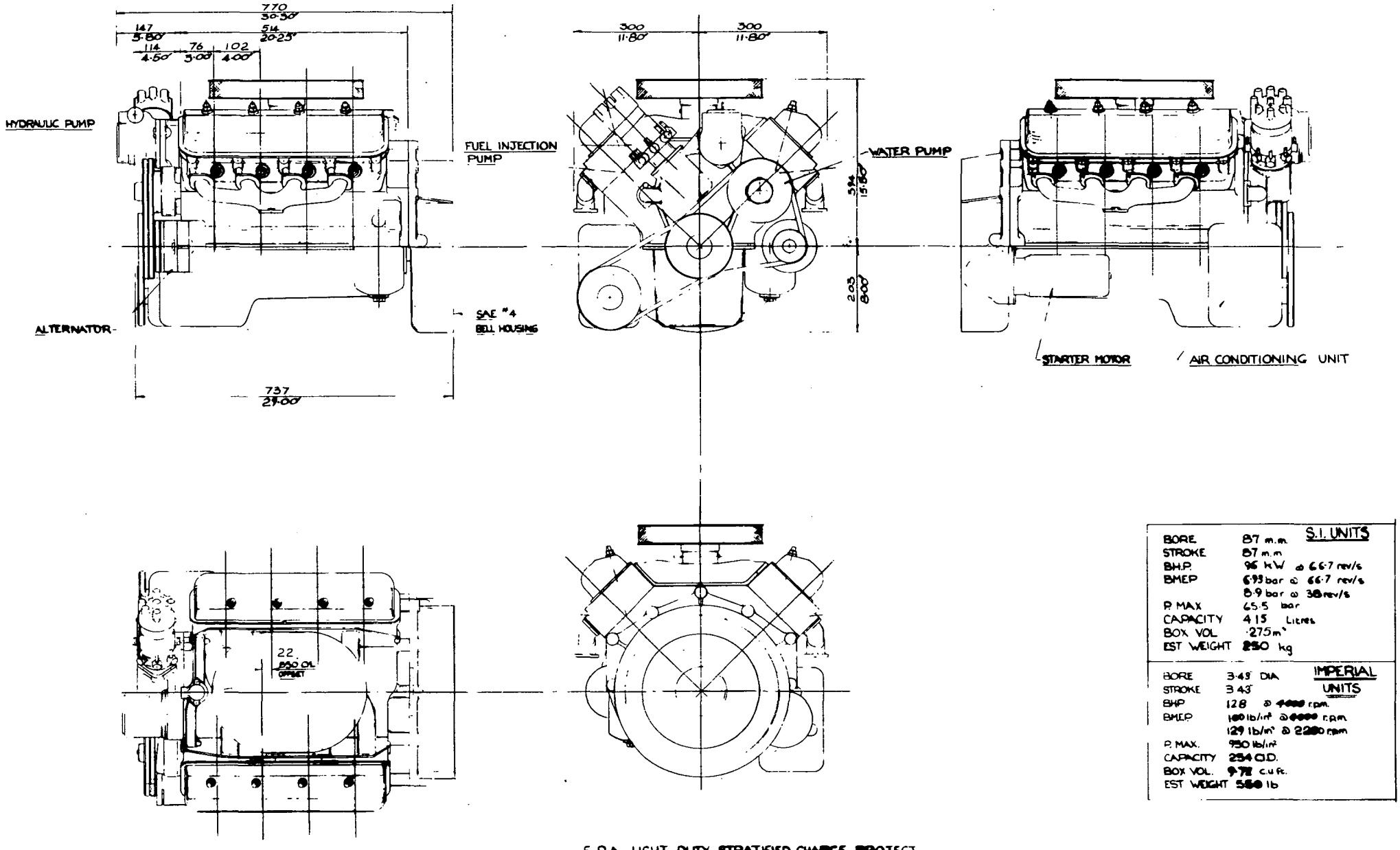

S.I. UNITS	
BORE	87 m.m.
STROKE	87 m.m
BHP	96 kW @ 66·7 rev/s
BMEP	6·93 bar @ 66·7 rev/s
	8·9 bar @ 38 rev/s
P. MAX	65·5 bar
CAPACITY	4·15 Litres
BOX VOL	·275 m³
EST WEIGHT	250 kg

IMPERIAL UNITS	
BORE	3·43" DIA
STROKE	3·43"
BHP	128 @ 4000 rpm
BMEP	100 lb/in² @ 4000 rpm
	129 lb/in² @ 2200 rpm
P. MAX.	950 lb/in²
CAPACITY	254 C.I.D.
BOX VOL.	9·72 cu.ft.
EST WEIGHT	550 lb

E.P.A. LIGHT DUTY STRATIFIED CHARGE PROJECT
TASK II - CONFIGURATION STUDY CATEGORY I
V8 FORD 'PROCO' SYSTEM
INSTALLATION DRG.
PRIMARY EMISSION TARGET

3111/4

FIG. 4.

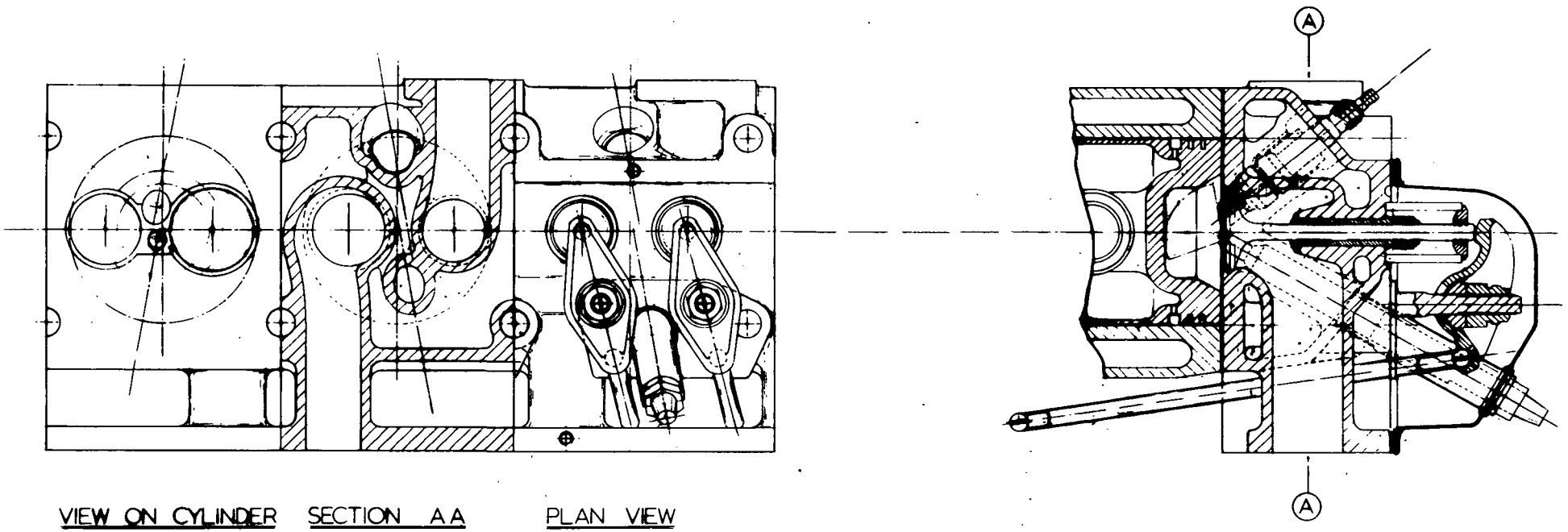

VIEW ON CYLINDER HEAD FACE SECTION AA PLAN VIEW

E.P.A. LIGHT DUTY STRATIFIED CHARGE PROJECT
TASK II CONFIGURATION STUDY CATEGORY II
V8 FORD 'PROCO' SYSTEM
CYLINDER HEAD LAYOUT
PRIMARY EMISSION TARGET

FIG. 5

3111/2

FIG. 6.

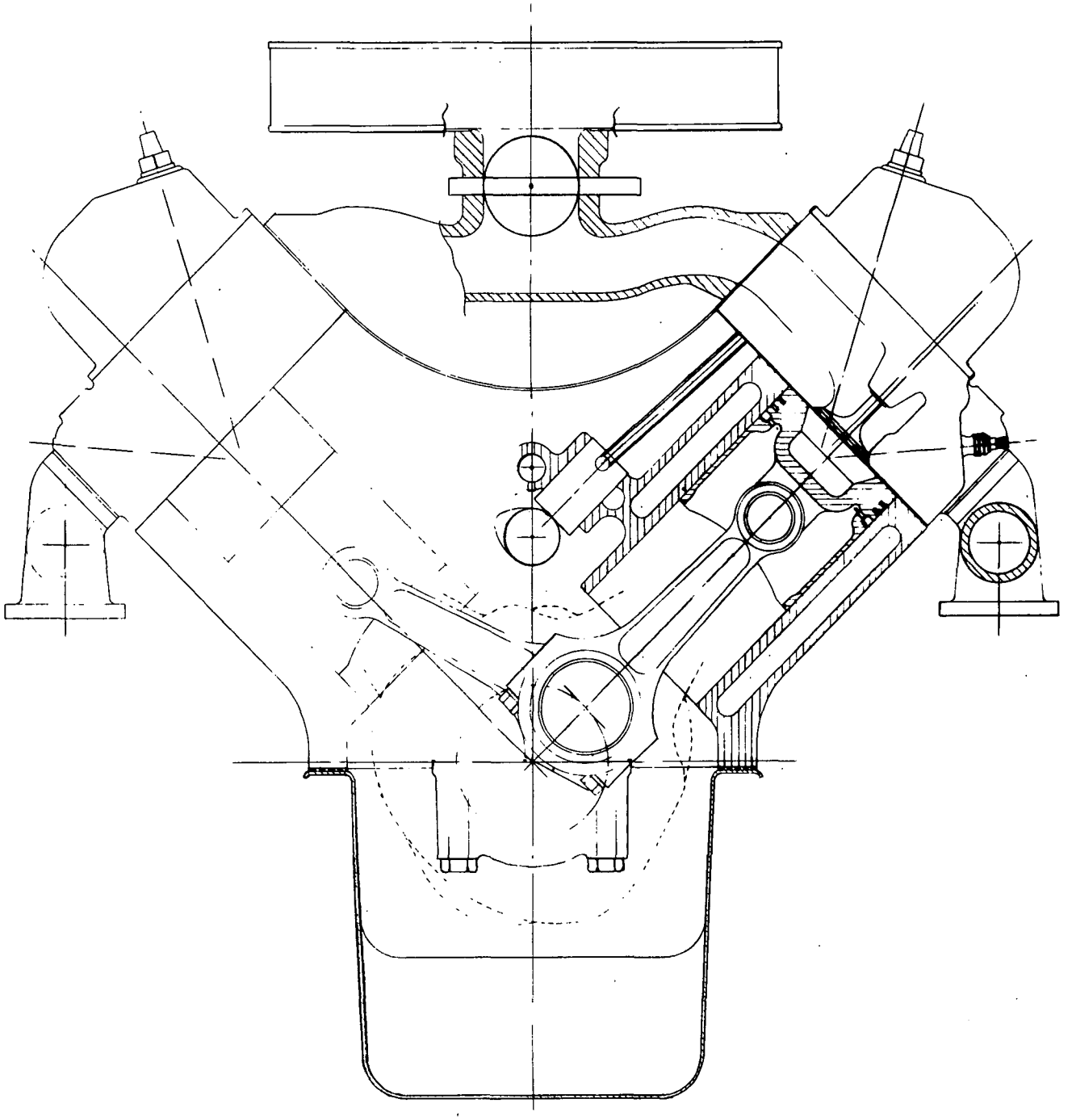

E.P.A. LIGHT DUTY STRATIFIED CHARGE PROJECT
TASK II CONFIGURATION STUDY CATEGORY I
V8 FORD 'PROCO' SYSTEM
CROSS SECTION ARRANGEMENT
PRIMARY EMISSION TARGET.

3111/1

RICARDO CONSULTING ENGINEERS

FIG. No. 7
DRG. No. D28878
DATE :- 11.9.75

ESTIMATED PERFORMANCE CURVE FOR

Ø 96 x 96 mm IN-LINE 6 CONFIGURATION - CATEGORY 1

BARE ENGINE A.I.T. 20°C BARO 760 mm Hg

PRIMARY EMISSION TARGET PROCO COMBUSTION SYSTEM

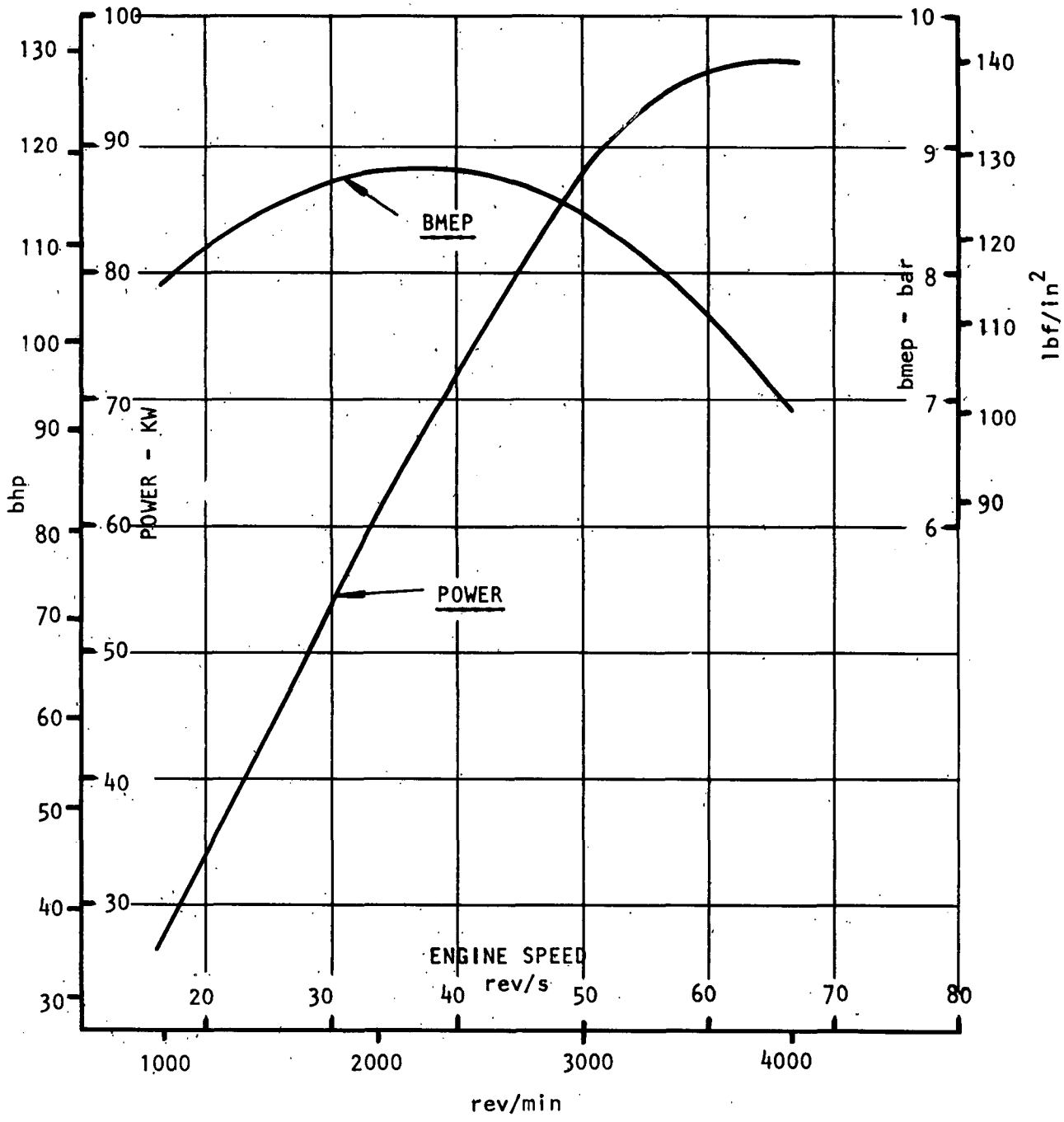

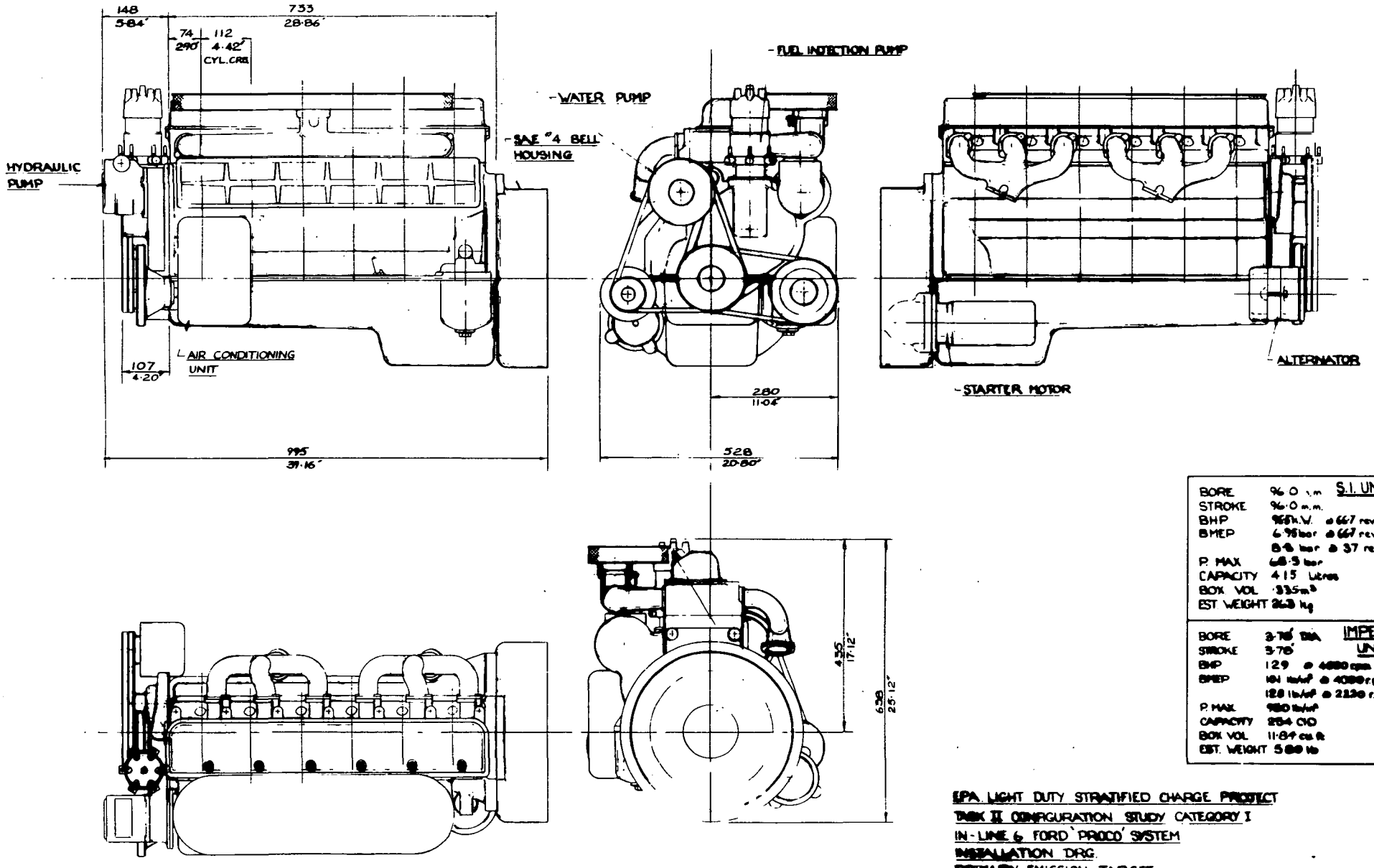

BORE	96·0 m.m.	S.I. UNITS
STROKE	96·0 m.m.	
BHP	958 k.W. @ 66·7 rev/s	
BMEP	6·96 bar @ 66·7 rev/s	
	8·4 bar @ 37 rev/s	
P. MAX	68·5 bar	
CAPACITY	4·15 Litres	
BOX VOL	·335 m³	
EST. WEIGHT	263 kg	

BORE	3·78" DIA.	IMPERIAL UNITS
STROKE	3·78"	
BHP	129 @ 4000 rpm	
BMEP	101 lb/in² @ 4000 rpm	
	128 lb/in² @ 2220 rpm	
P. MAX	980 lb/in²	
CAPACITY	254 CID	
BOX VOL	11·84 cu ft	
EST. WEIGHT	580 lb	

EPA. LIGHT DUTY STRATIFIED CHARGE PROJECT
TASK II CONFIGURATION STUDY CATEGORY I
IN-LINE 6 FORD 'PROCO' SYSTEM
INSTALLATION DRG.
PRIMARY EMISSION TARGET

FIG. 8

3111/7

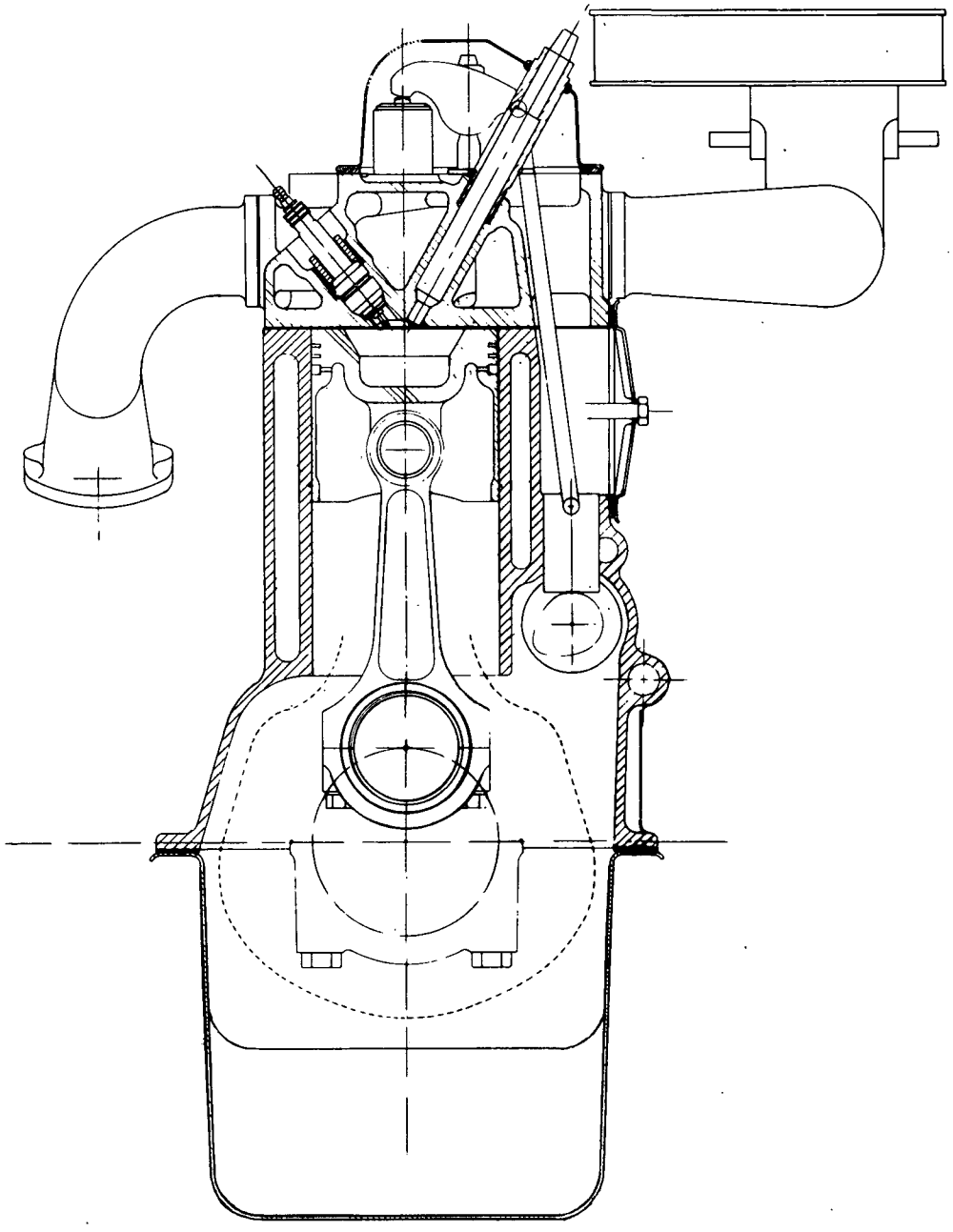

E.P.A. LIGHT DUTY STRATIFIED CHARGE PROJECT
TASK II CONFIGURATION STUDY CATEGORY I
IN-LINE 6 FORD 'PROCO' SYSTEM
CROSS-SECTIONAL ARRANGEMENT
PRIMARY EMISSION TARGET

RICARDO CONSULTING ENGINEERS

FIG. No. 10
DRG. No. D28879
DATE :- 11.9.75

ESTIMATED PERFORMANCE CURVE FOR
Ø 94 x 94 mm V8 CONFIGURATION - CATEGORY 1
BARE ENGINE A.I.T. 20°C BARO 760 mm Hg
SECONDARY EMISSION TARGET PROCO COMBUSTION SYSTEM

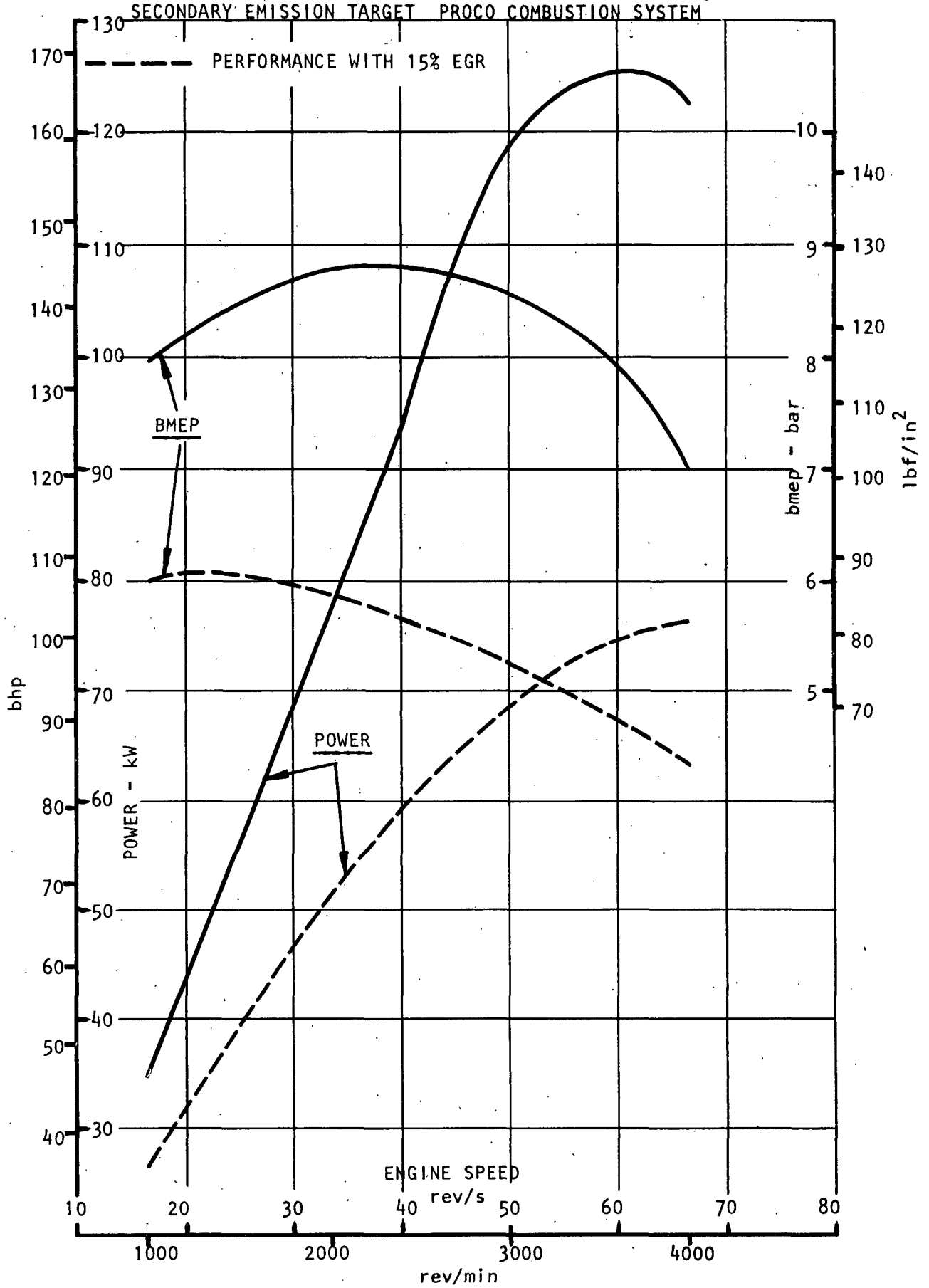

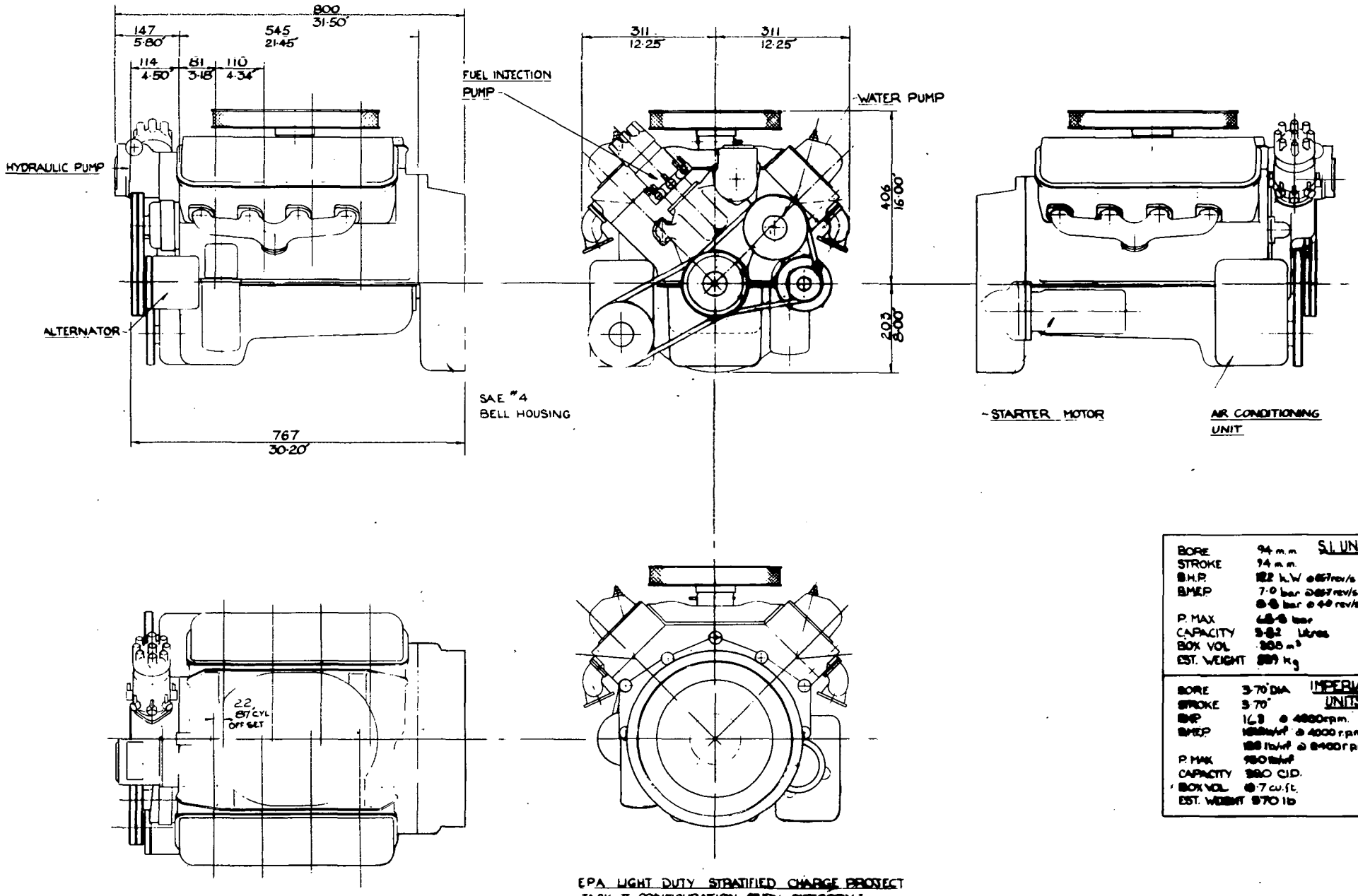

BORE	94 m.m.	S.I. UNITS
STROKE	94 m.m.	
B.H.P.	122 k.W @ 65 rev/s	
B.M.E.P.	7·0 bar @ 65·7 rev/s	
	8·8 bar @ 44 rev/s	
P. MAX	68·8 bar	
CAPACITY	3·82 litres	
BOX VOL	0·05 m³	
EST. WEIGHT	289 kg	

BORE	3·70" DIA.	IMPERIAL UNITS
STROKE	3·70"	
BHP	163 @ 4000 r.p.m.	
BMEP	102 lb/in² @ 4000 r.p.m.	
	128 lb/in² @ 2400 r.p.m.	
P. MAX	980 lb/in²	
CAPACITY	233 C.I.D.	
BOX VOL	1·7 cu.ft.	
EST. WEIGHT	570 lb	

EPA LIGHT DUTY STRATIFIED CHARGE PROJECT
TASK II CONFIGURATION STUDY CATEGORY 1
V8 FORD PROCO SYSTEM
INSTALLATION DRG.
SECONDARY EMISSION TARGET

FIG. 11.

3111/9

RICARDO CONSULTING ENGINEERS

FIG. No. 12
DRG. No. D28880
DATE :- 12.9.75

MAXIMUM POWER OPERATING CONDITIONS FOR
L141 TCCS ENGINES AT TWO SMOKE LEVELS

NATURALLY ASPIRATED

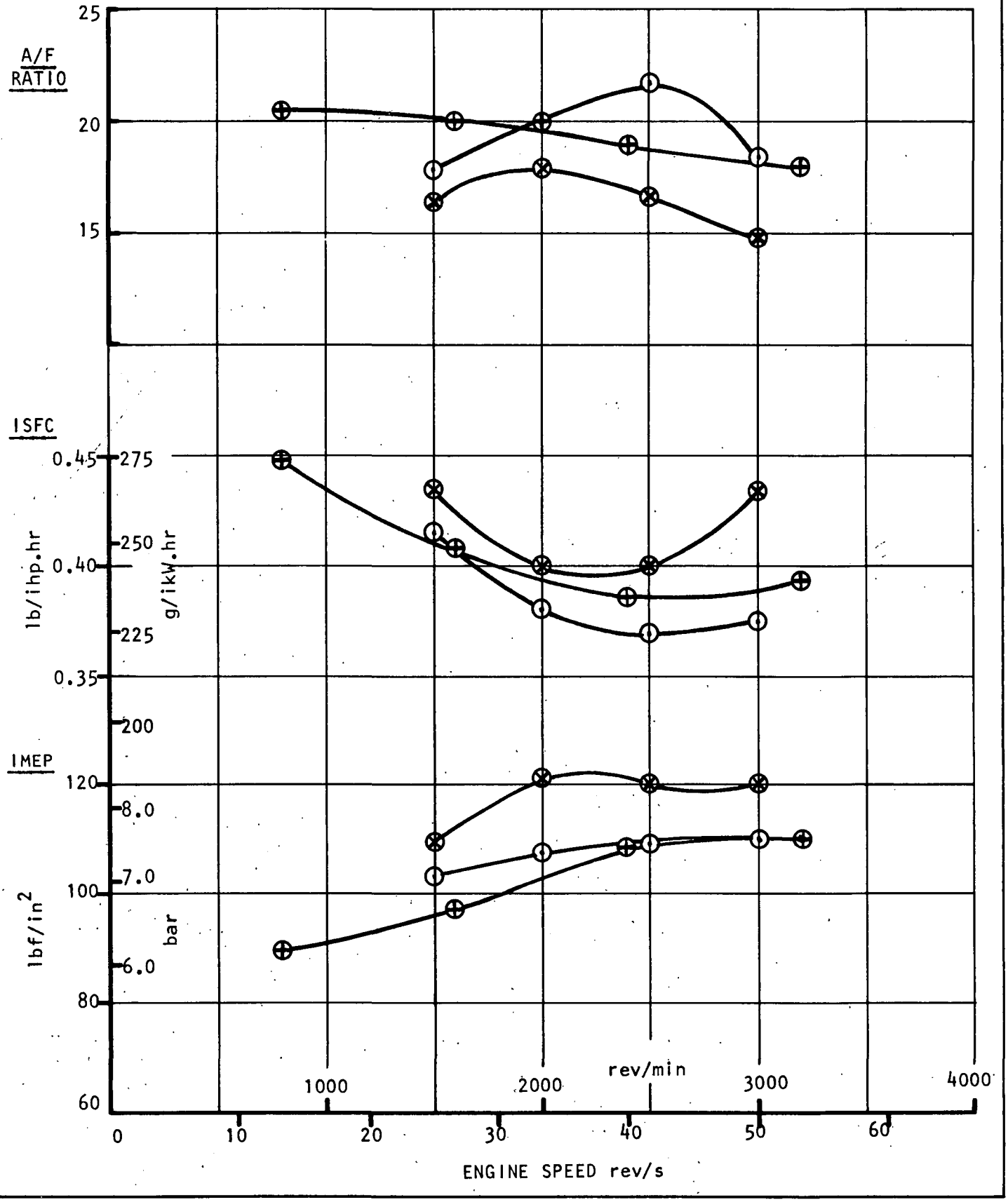

RICARDO CONSULTING ENGINEERS

FIG. No. 13
DRG. No. D28881
DATE :- 12.9.75

INDICATED SPECIFIC AIR CONSUMPTION FOR
L141 TCCS ENGINES AT TWO SMOKE LEVELS
NATURALLY ASPIRATED

⊕ TOYOTA DATA ON L141 BOSCH SMOKE NO. 4
⊗ TEXACO " " " " " NO. 4
⊙ " " " " " " NO. 2½-2

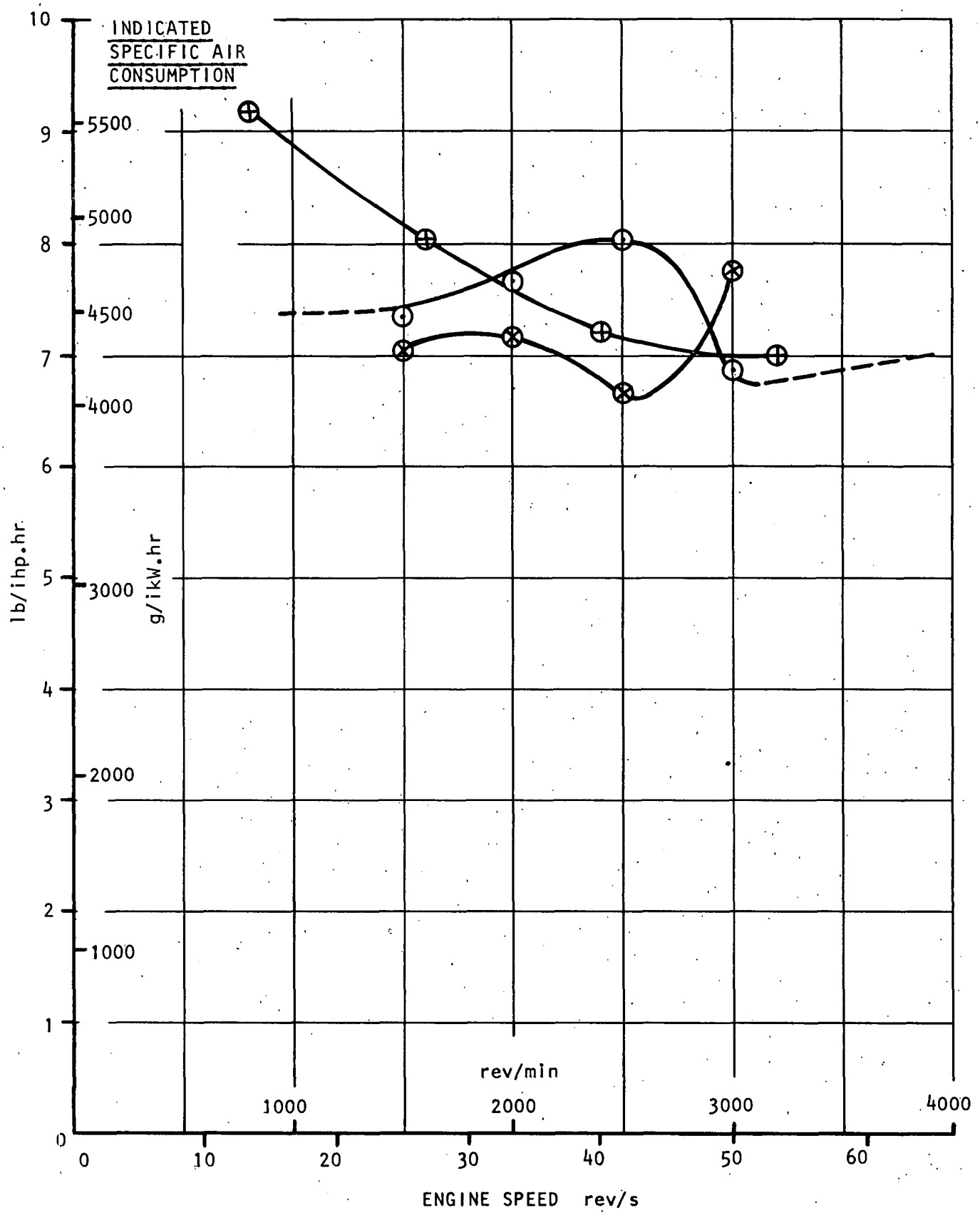

RICARDO CONSULTING ENGINEERS

FIG. No. 14

DRG. No. D28882

DATE :- 15.9.75

MOTORING FRICTION OF L141 TCCS ENGINES

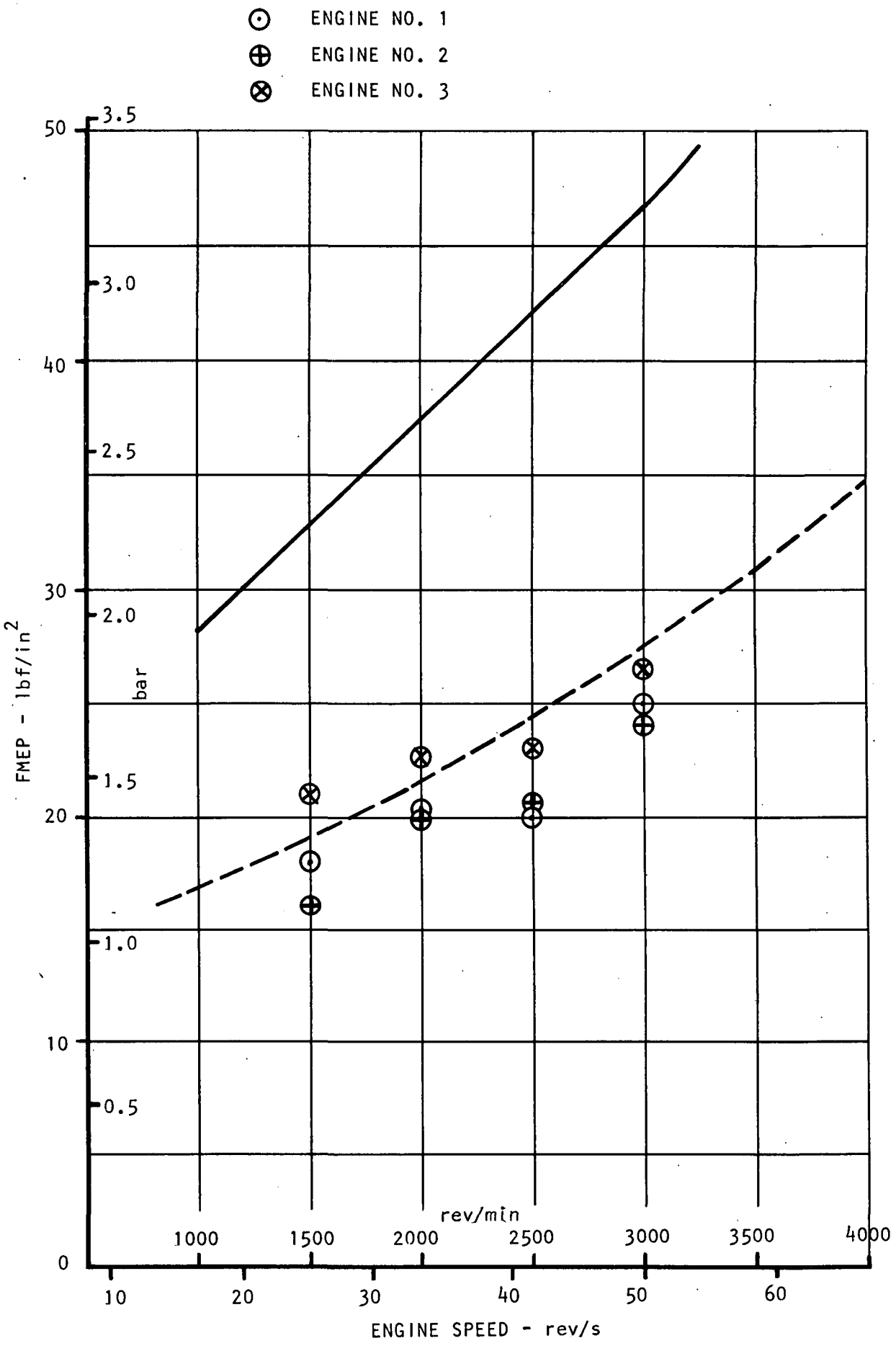

RICARDO CONSULTING ENGINEERS

FIG. No. 15
DRG. No. D28883
DATE :- 11.9.75

ESTIMATED PERFORMANCE CURVE FOR

Ø 95 x 95 mm NATURALLY ASPIRATED V8 CONFIGURATION - CATEGORY 2

BARE ENGINE A.I.T. 20°C BARO 760 mm Hg

PRIMARY EMISSION TARGET TCCS COMBUSTION SYSTEM

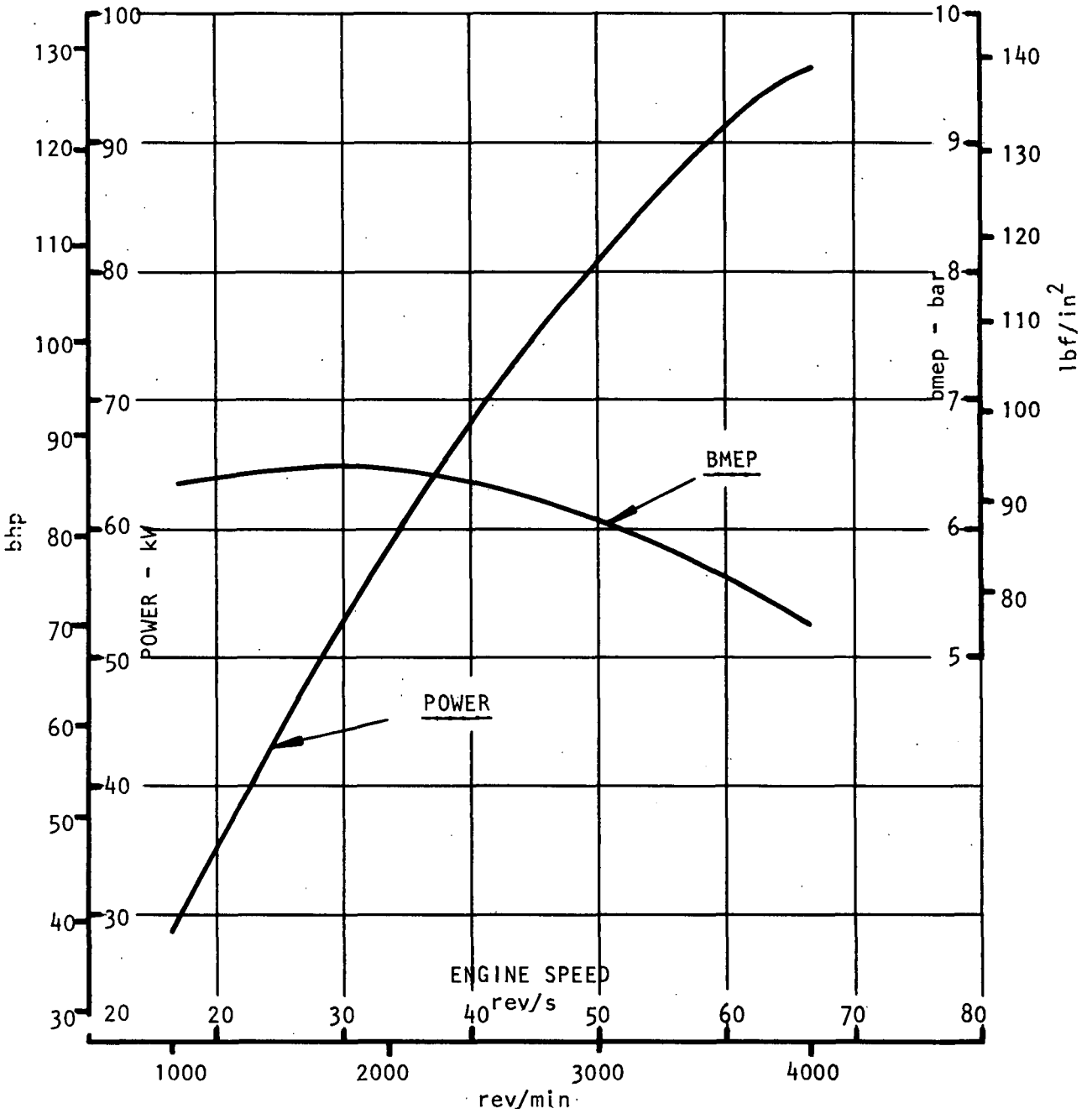

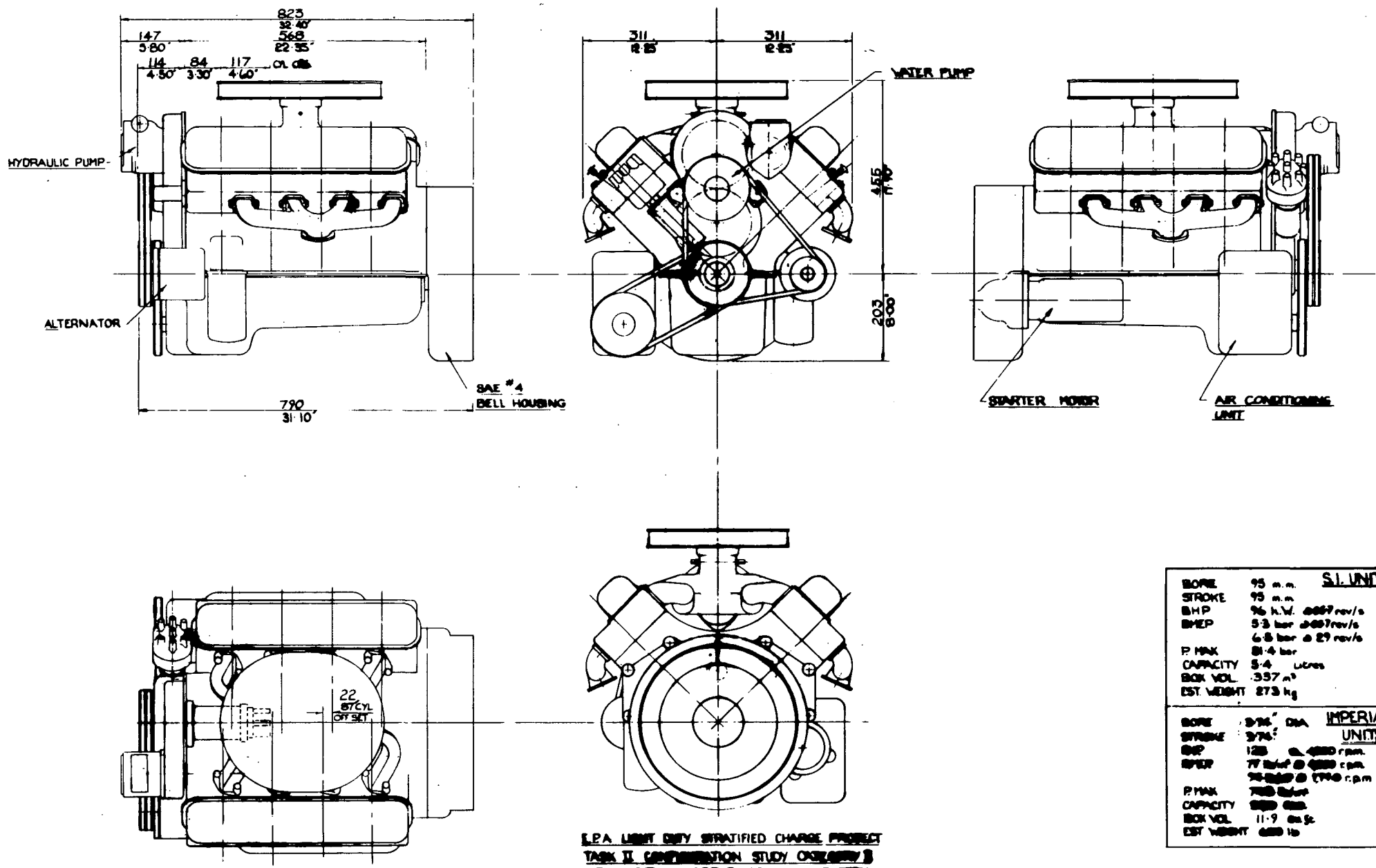

FIG. 16.

3111/12

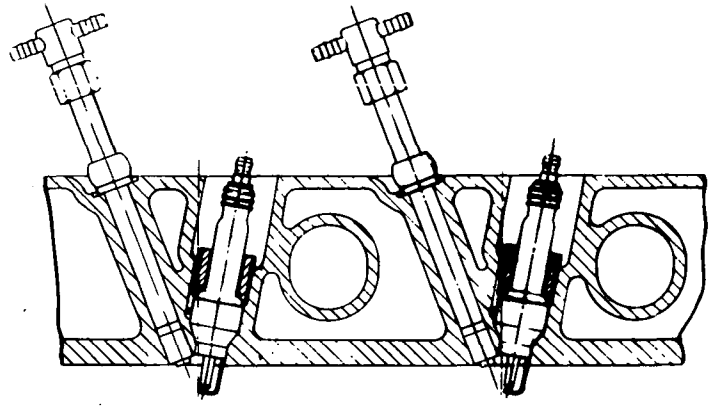

SECTION B-B

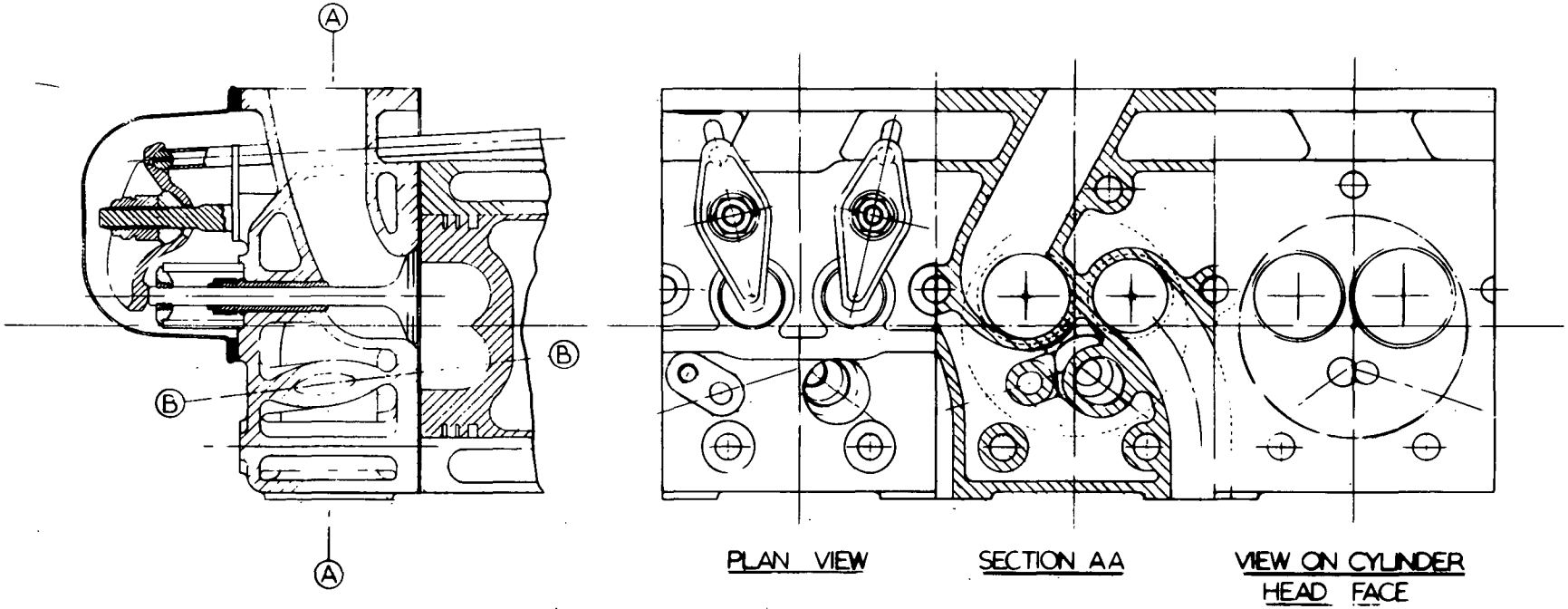

PLAN VIEW SECTION AA VIEW ON CYLINDER HEAD FACE

E.P.A. LIGHT DUTY STRATIFIED CHARGE PROJECT
TASK II CONFIGURATION STUDY CATYGORY I
V8 NATURALLY ASPIRATED TCCS. SYSTEM
CYLINDER HEAD DRG.
PRIMARY EMISSION TARGET

FIG. 1.7

3111/11

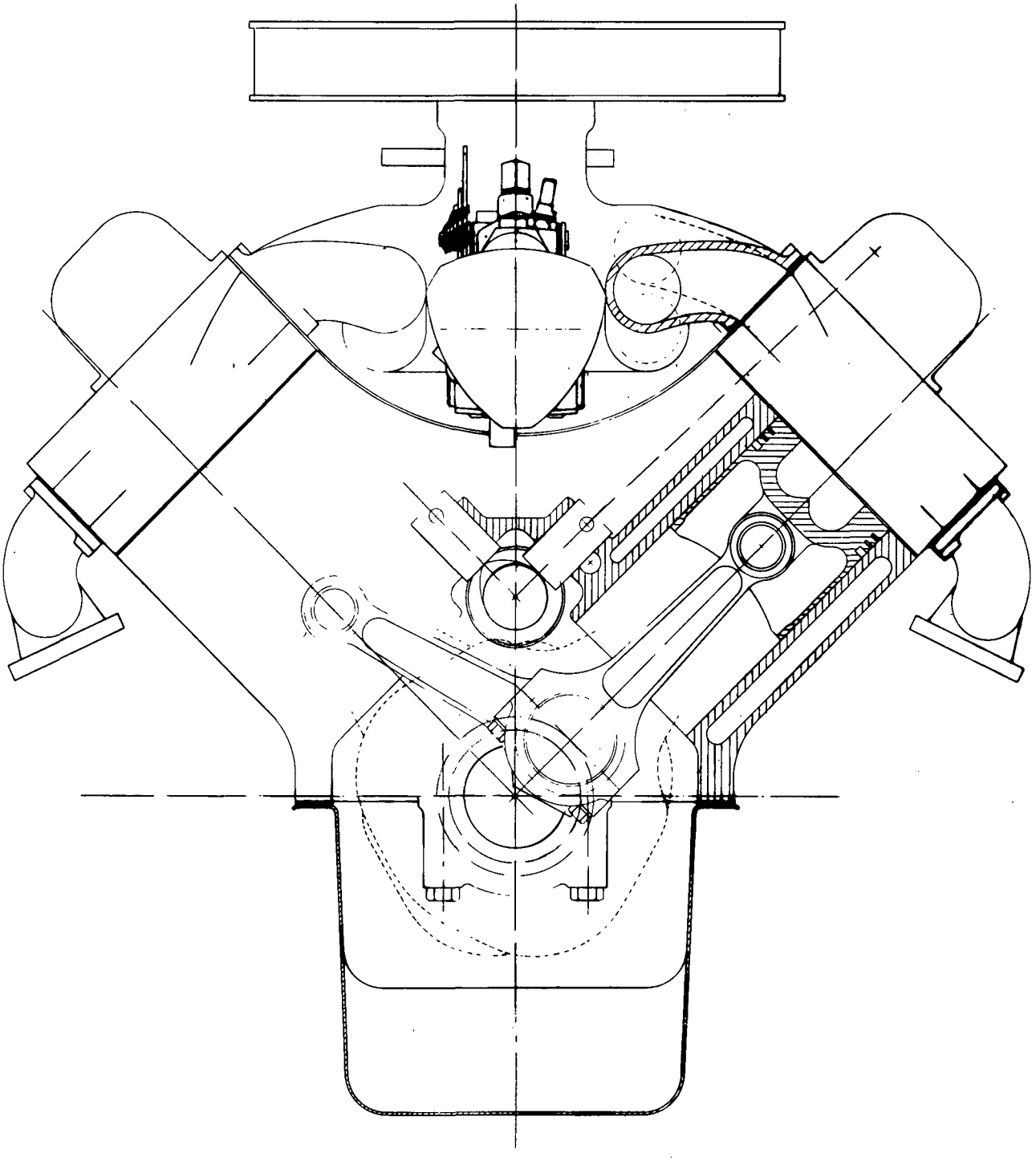

E.P.A. LIGHT DUTY STRATIFIED CHARGE PROJECT
TASK II CONFIGURATION STUDY CATEGORY II
V8 NATURALLY ASPIRATED TEXACO TCCS SYSTEM
PRIMARY EMISSION TARGET
CROSS SECTIONAL ARRANGEMENT

RICARDO CONSULTING ENGINEERS

FIG No 19
DRG. No. D28884
DATE - 15.9.75

CALCULATED VARIATION IN BOOST DENSITY RATIO AND
AIR FUEL RATIO FOR THE CONFIGURATED TURBOCHARGED TCCS ENGINE

PRIMARY EMISSION TARGET

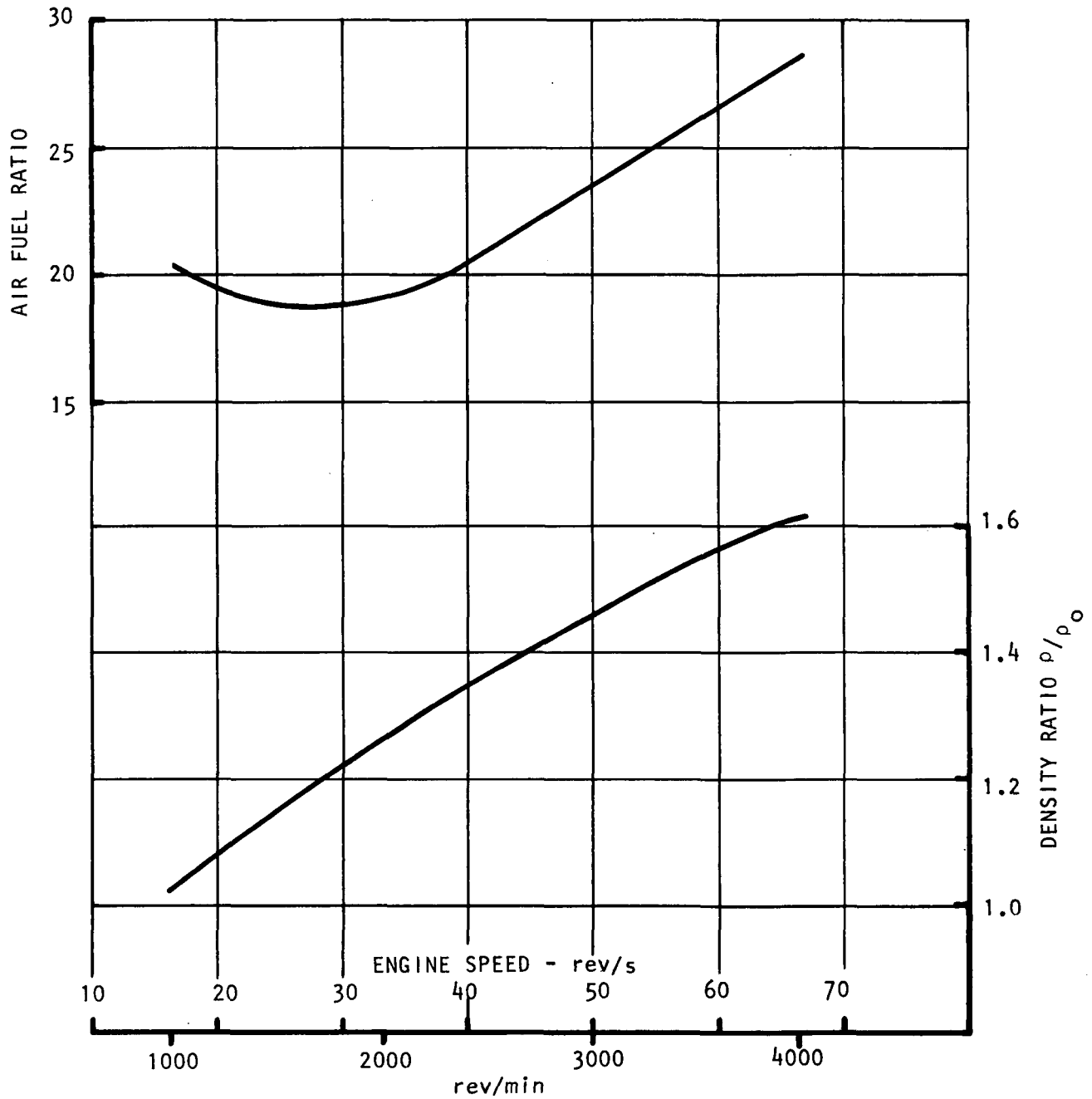

RICARDO CONSULTING ENGINEERS

FIG. No. 20
DRG. No. D28885
DATE :- 15.9.75

RELATIONSHIP BETWEEN INDICATED FUEL CONSUMPTION

AND AIR FUEL RATIO FOR A TCCS ENGINE

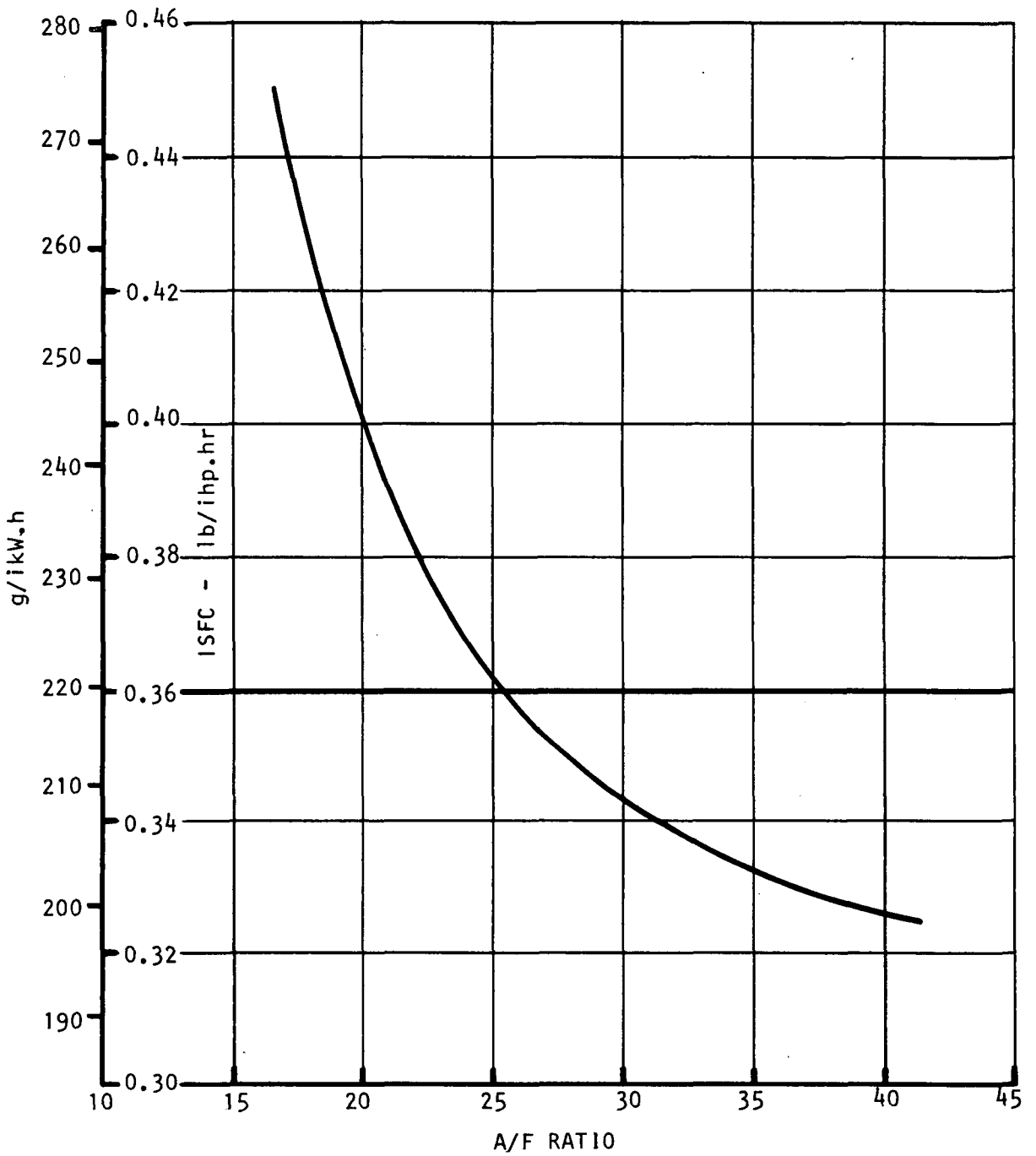

RICARDO CONSULTING ENGINEERS

FIG. No. 21
DRG. No. D28886
DATE :- 15.9.75

ESTIMATED PERFORMANCE CURVE FOR

Ø 96 x 96 mm TURBOCHARGED IN-LINE 6 CONFIGURATION - CATEGORY 2

BARE ENGINE A.I.T. 20°C BARO 760 mm Hg

PRIMARY EMISSION TARGET TCCS COMBUSTION SYSTEM

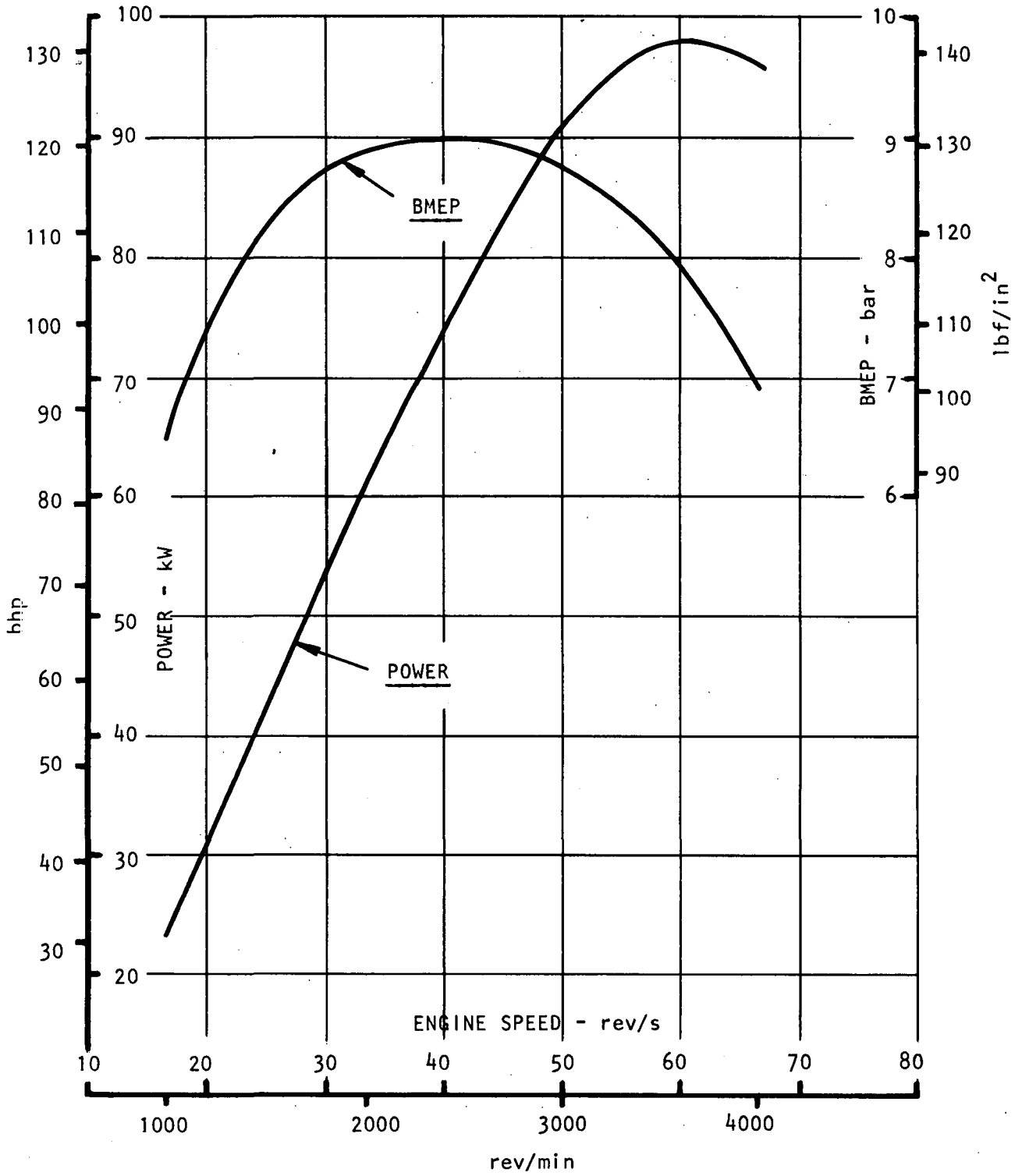

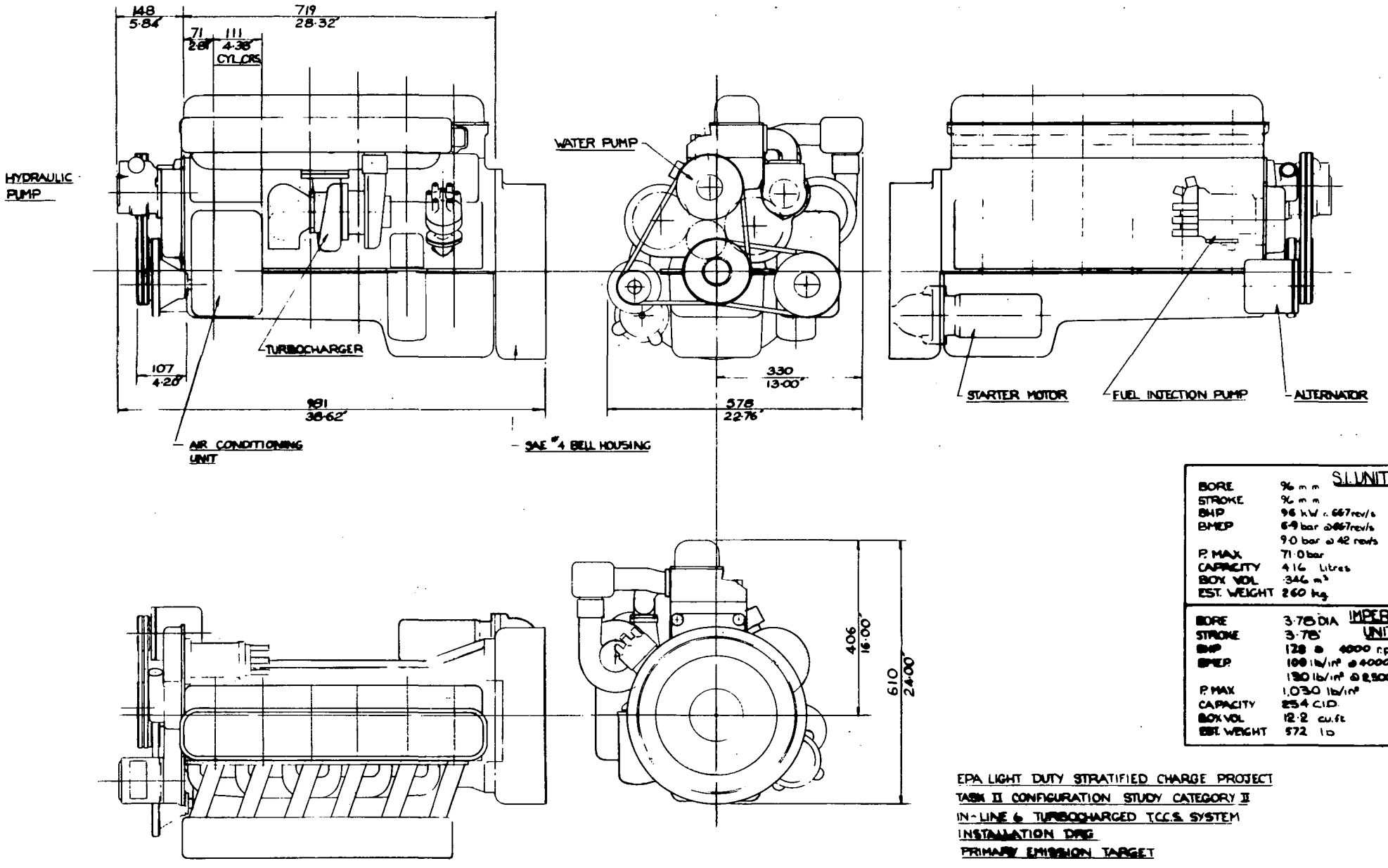

		S.I. UNITS
BORE	96 mm	
STROKE	96 mm	
BHP	96 kW @ 667 rev/s	
BMEP	6·9 bar @ 667 rev/s	
	9·0 bar @ 42 rev/s	
P. MAX.	71·0 bar	
CAPACITY	4·16 Litres	
BOX VOL	·346 m³	
EST. WEIGHT	260 kg	

		IMPERIAL UNITS
BORE	3·78 DIA	
STROKE	3·78"	
BHP	128 @ 4000 r.p.m.	
BMEP	100 lb/in² @ 4000 rpm	
	130 lb/in² @ 2,500 rpm	
P. MAX	1,030 lb/in²	
CAPACITY	254 C.I.D.	
BOX VOL	12·2 cu.ft	
EST. WEIGHT	572 lb	

EPA LIGHT DUTY STRATIFIED CHARGE PROJECT
TASK II CONFIGURATION STUDY CATEGORY II
IN-LINE 6 TURBOCHARGED T.C.C.S. SYSTEM
INSTALLATION DRG
PRIMARY EMISSION TARGET

FIG. 22.

3111/15

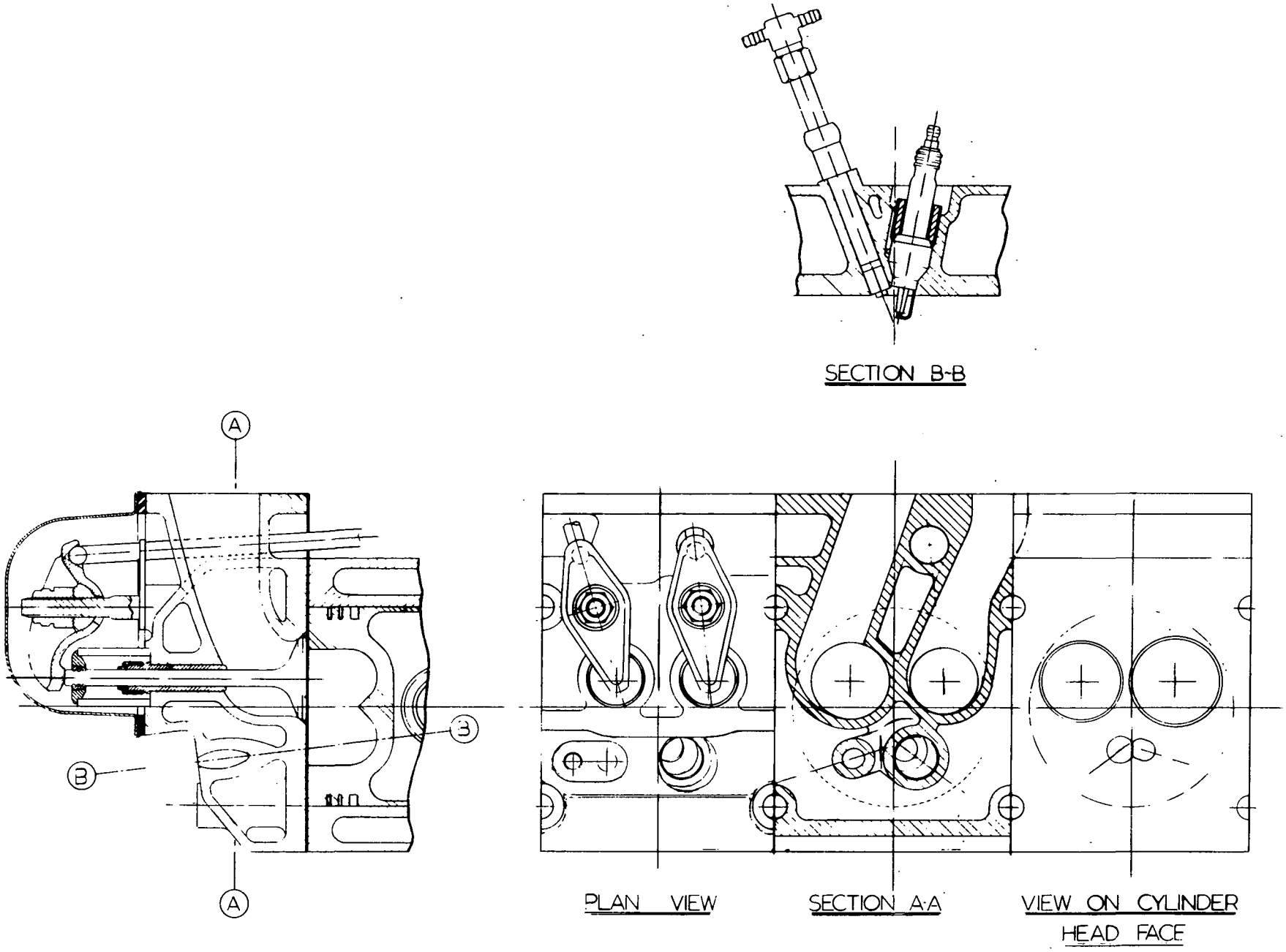

E.P.A. LIGHT DUTY STRATIFIED CHARGE PROJECT
TASK II CONFIGURATION STUDY CATEGORY II
IN-LINE 6 TURBOCHARGED TCCS SYSTEM.
CYLINDER HEAD DRG
PRIMARY EMISSION TARGET

3111/14

FIG. 23

FIG. 24.

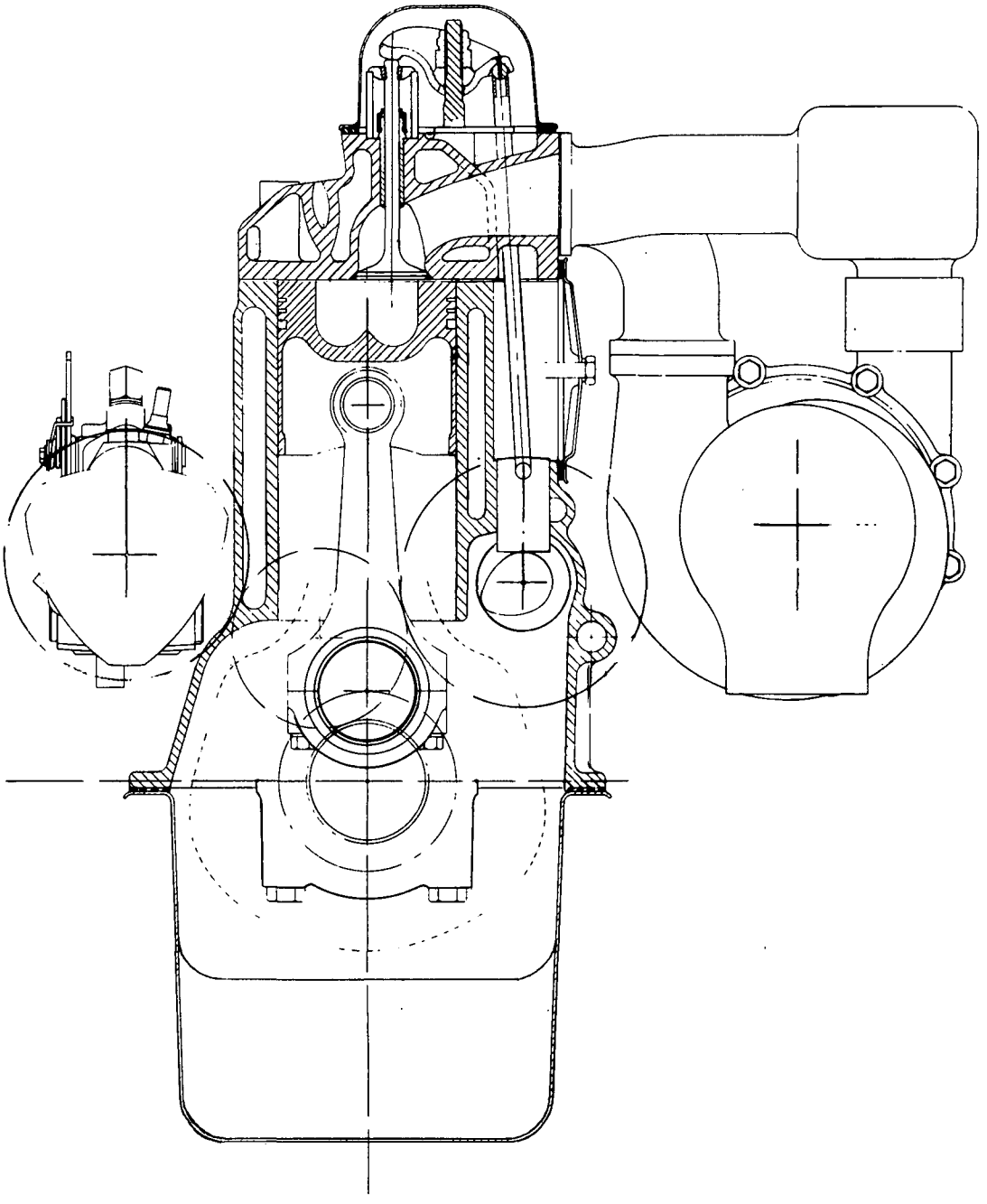

EPA LIGHT DUTY STRATIFIED CHARGE PROJECT.
TASK II CONFIGURATION STUDY CATEGORY II.
IN-LINE 6 TURBOCHARGED TCCS SYSTEM.
CROSS- SECTIONAL ARRANGEMENT.
PRIMARY EMISSION TARGET.

3111/13

RICARDO CONSULTING ENGINEERS

FIG. No. 25
DRG. No. D28887
DATE :- 15.9.75

ESTIMATED PERFORMANCE CURVE FOR
2 BANK ROTARY ENGINE - CATEGORY 2

BARE ENGINE A.I.T. 20°C BARO 760 mm Hg

PRIMARY EMISSION TARGET CURTISS WRIGHT COMBUSTION SYSTEM

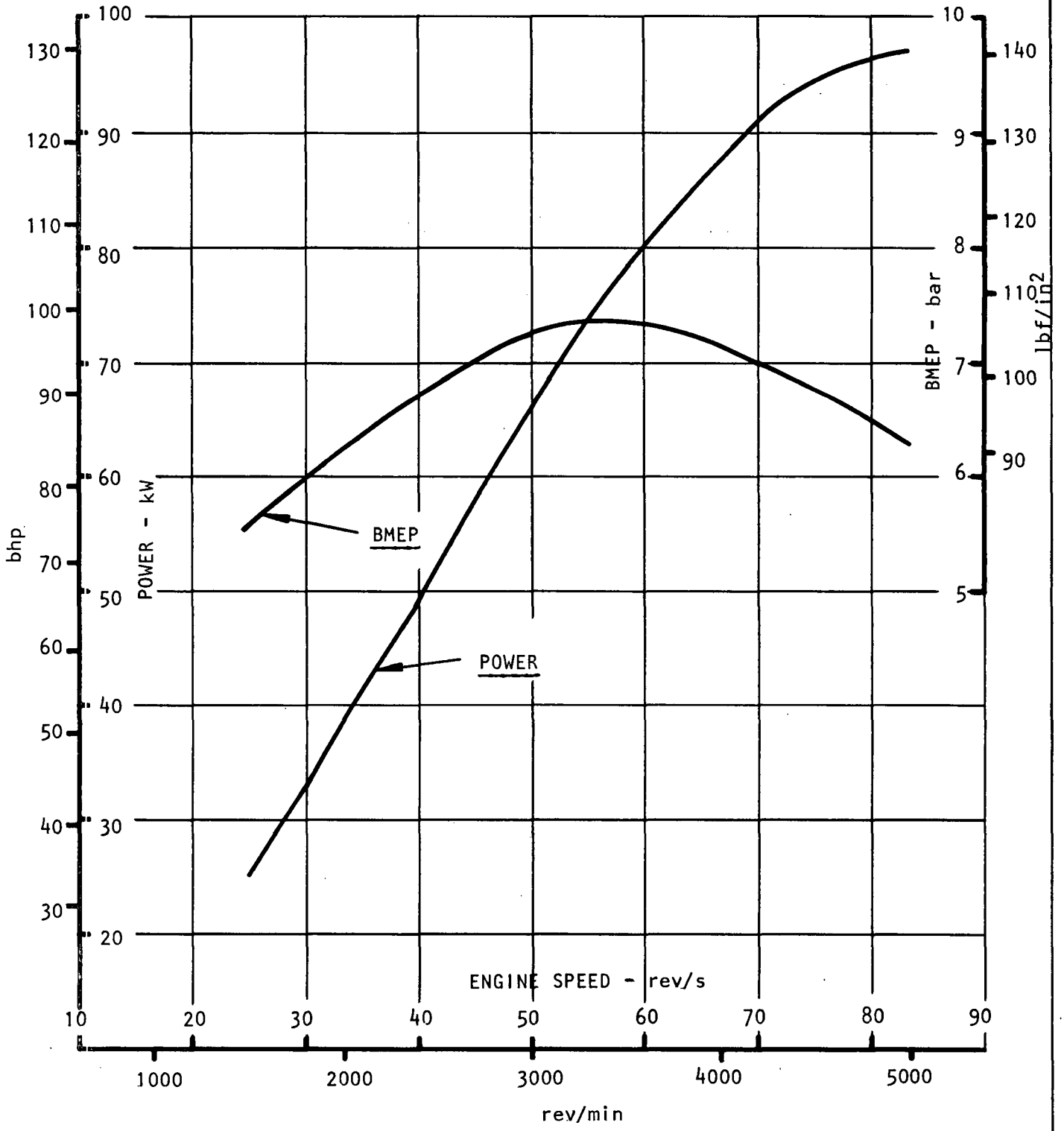

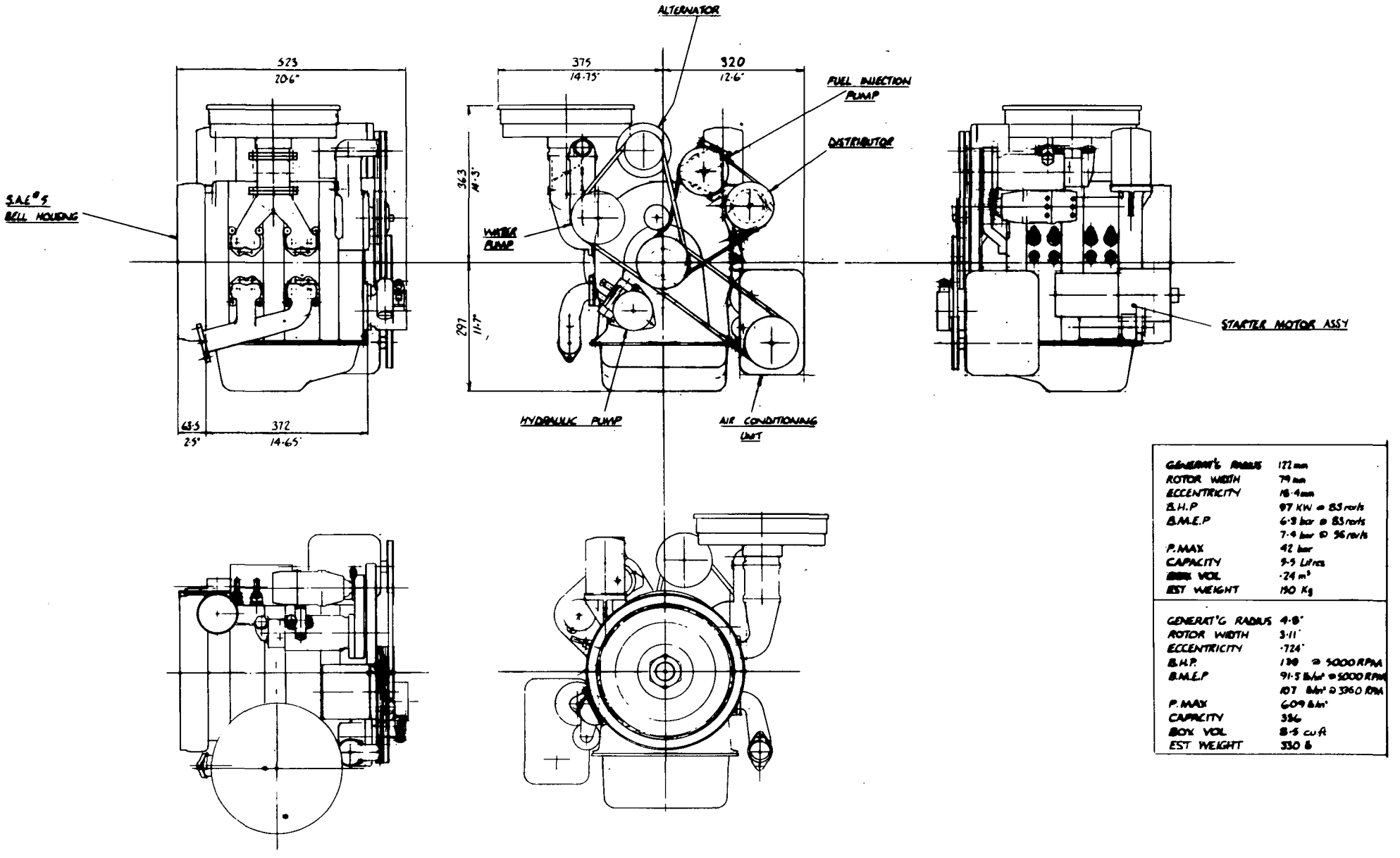

GENERAT'G RADIUS	172 mm
ROTOR WIDTH	79 mm
ECCENTRICITY	18·4 mm
B.H.P	97 KW @ 83 rev/s
B.M.E.P	6·9 bar @ 83 rev/s
	7·4 bar @ 96 rev/s
P.MAX	42 bar
CAPACITY	9·5 Litres
BOX VOL	·24 m³
EST WEIGHT	150 Kg

GENERAT'G RADIUS	4·8"
ROTOR WIDTH	3·11"
ECCENTRICITY	·724"
B.H.P.	130 @ 5000 RPM
B.M.E.P	91·5 lb/in² @ 5000 RPM
	107 lb/in² @ 3360 RPM
P.MAX	609 lb/in²
CAPACITY	336
BOX VOL	8·5 cu ft
EST WEIGHT	330 lb

EPA LIGHT DUTY STRATIFIED CHARGE PROJECT.
TASK II CONFIGURATION STUDY CATEGORY II.
2 BANK ROTARY.
INSTALLATION DRG.
PRIMARY EMISSION TARGET.

3111/20

FIG. 26.

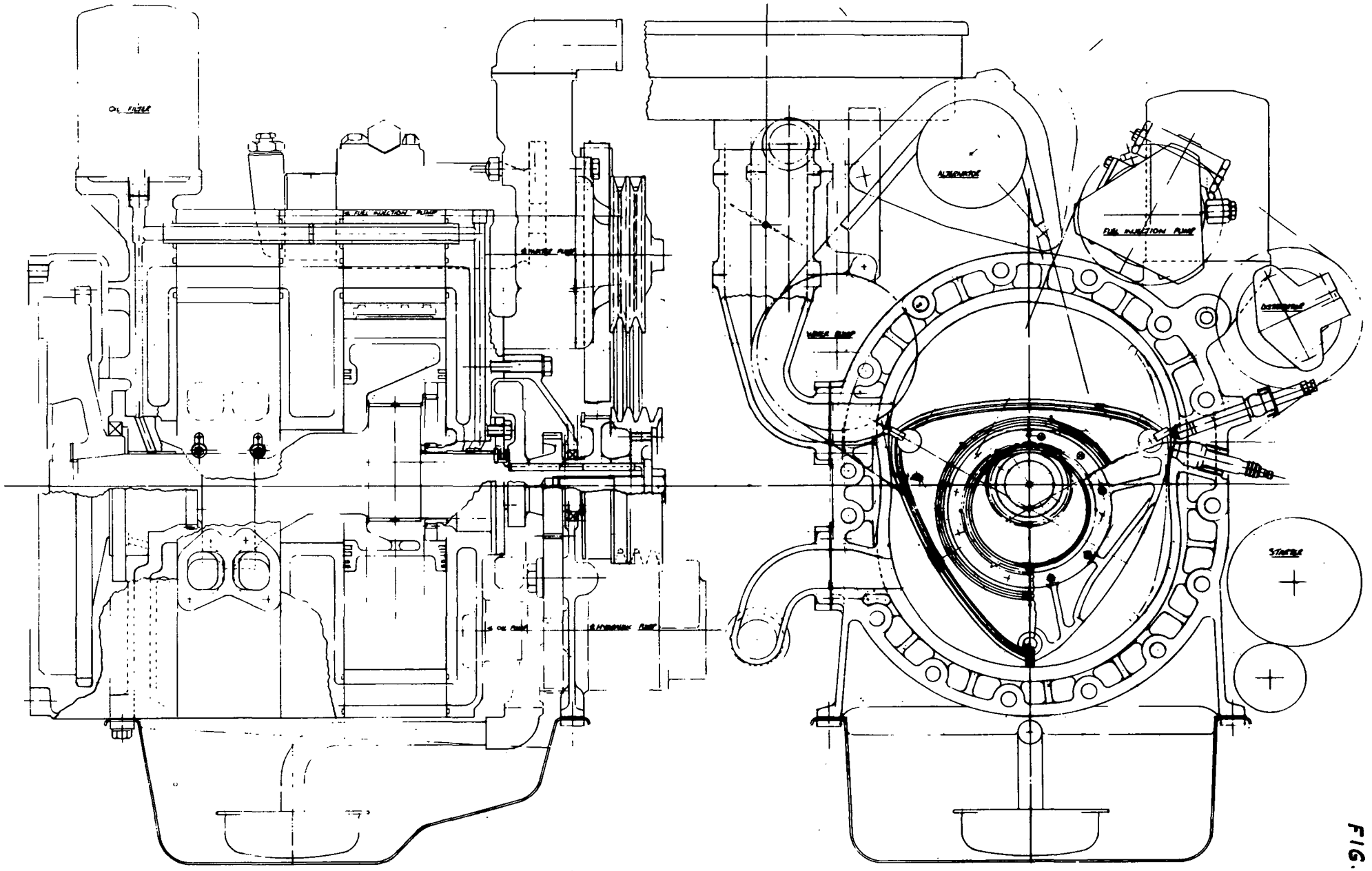

EPA LIGHT DUTY STRATIFIED CHARGE PROJECT.
TASK II CONFIGURATION STUDY CATEGORY II.
2 BANK ROTARY.
CROSS & LONGITUDINAL SECTIONAL ARRANGEMENT.
PRIMARY EMISSION TARGET.

3111/19

FIG. 27

RICARDO CONSULTING ENGINEERS

FIG. No. 28
DRG. No. D28888
DATE :- 15.9.75

CALCULATED VARIATION OF BOOST DENSITY RATIO FOR

CONFIGURATED TURBOCHARGED TCCS ENGINE

SECONDARY EMISSION TARGET

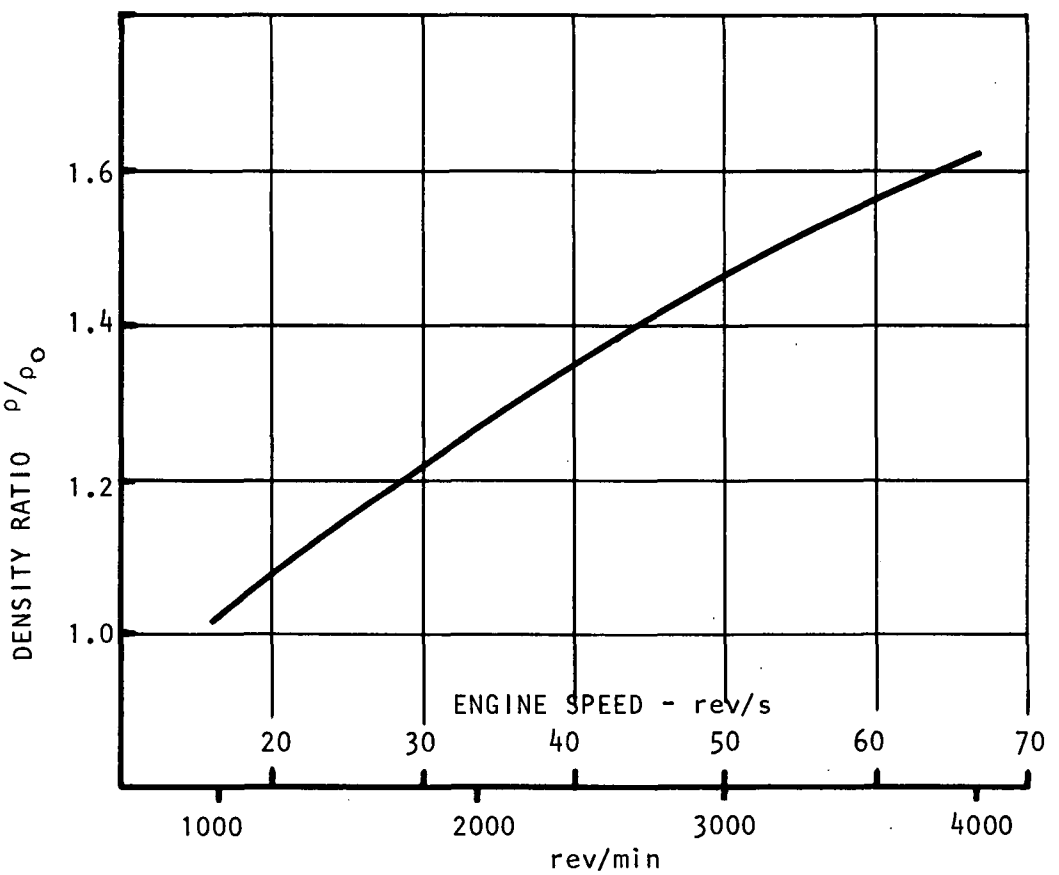

RICARDO CONSULTING ENGINEERS

FIG. No. 29
DRG. No. D28889
DATE :- 15.9.75

ESTIMATED PERFORMANCE CURVE FOR

ø 101 x 92 mm V8 TURBOCHARGED CONFIGURATION - CATEGORY 2

BARE ENGINE A.I.T. 20°C BARO 760 mm Hg

SECONDARY EMISSION TARGET TCCS COMBUSTION SYSTEM

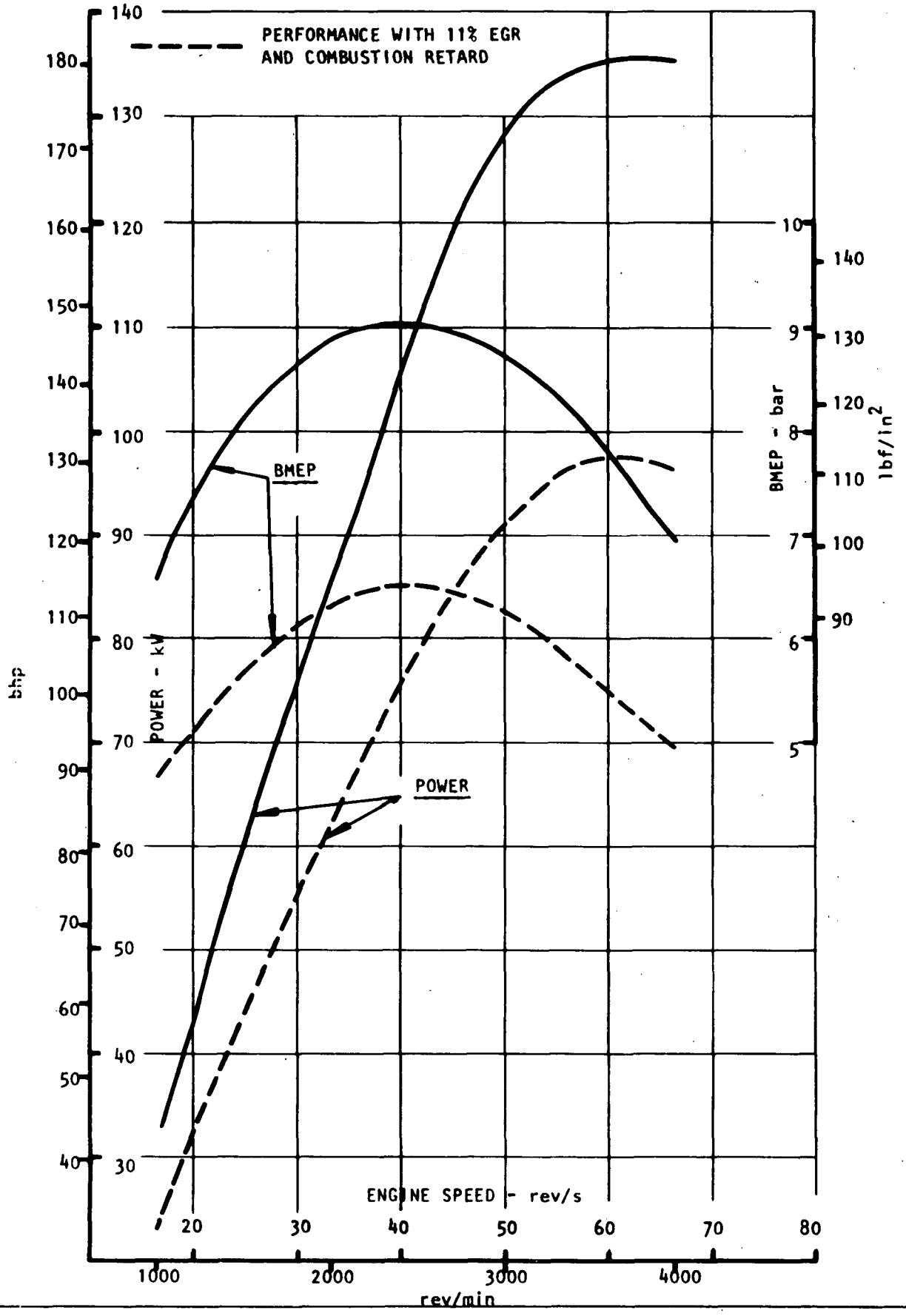

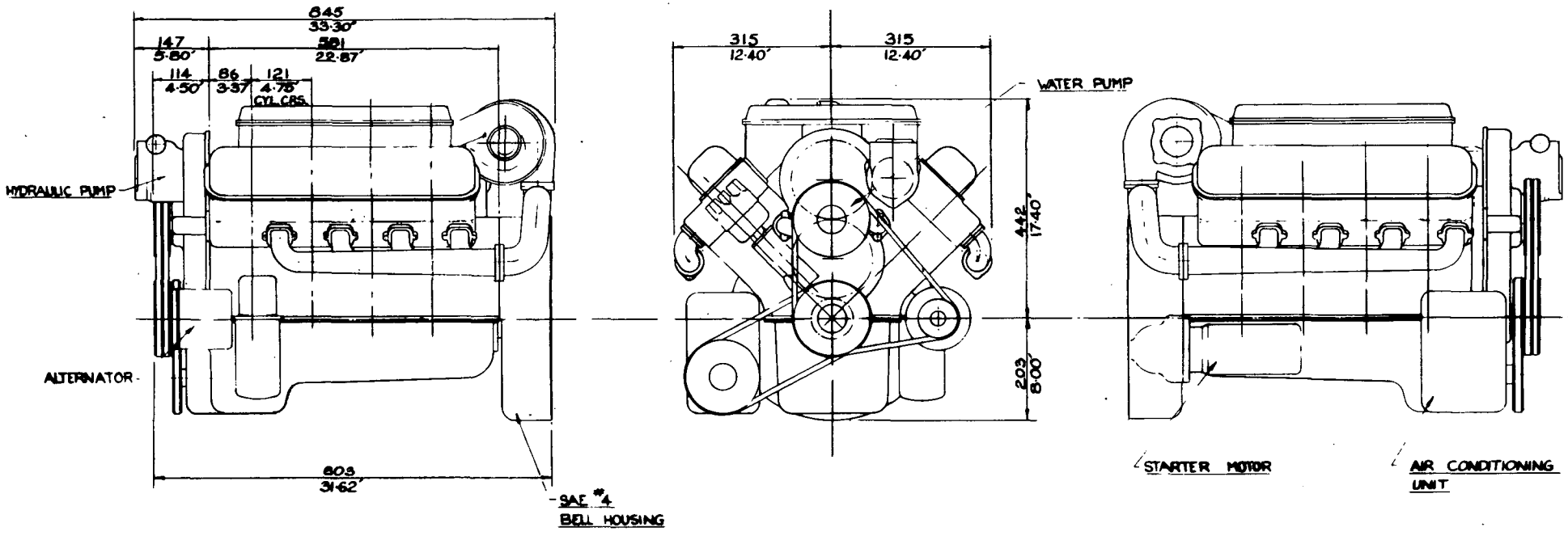

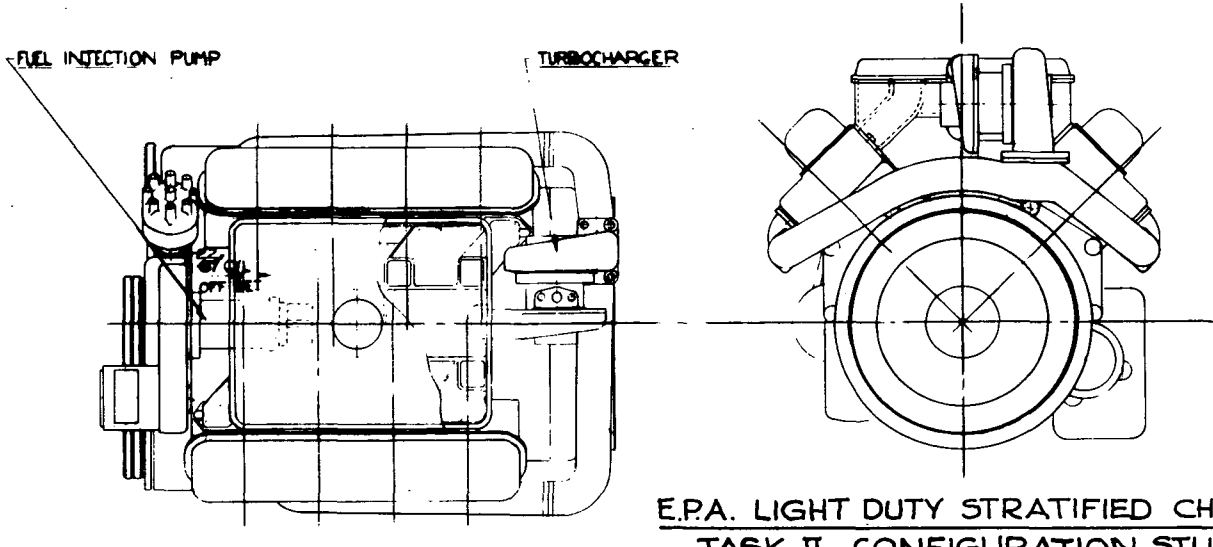

		S.I. UNITS
BORE	101 mm	
STROKE	92 mm	
BHP	135 kW @ 66·7 rev/s	
BMEP	6·9 bar @ 66·7 rev/s	
	9·0 bar @ 41 rev/s	
P MAX	71·0 bar	
CAPACITY	5·87 Litres	
BOX VOL	·343 m³	
EST WEIGHT	286 kg	

		IMPERIAL UNITS
BORE	3·96" DIA	
STROKE	3·64"	
BHP	181 @ 4000 r.p.m.	
BMEP	100 lb/in² @ 4000 r.p.m.	
	130 lb/in² @ 2430 r.p.m.	
P MAX	1030 lb/in²	
CAPACITY	358 C.I.D.	
BOX VOL	12·1 cu ft	
EST WEIGHT	630 lb	

E.P.A. LIGHT DUTY STRATIFIED CHARGE PROJECT
TASK II CONFIGURATION STUDY CATEGORY II
V8 TURBOCHARGED TCCS SYSTEM
INSTALLATION DRG.
SECONDARY EMISSION TARGET

3111/18

FIG. 30

RICARDO CONSULTING ENGINEERS

FIG. No. 31
DRG. No. D28890
DATE :- 15.9.75

ESTIMATED PERFORMANCE CURVE FOR

Ø 93 x 93 mm V8 CONFIGURATION - CATEGORY 3

BARE ENGINE A.I.T. 20°C BARO 760 mm Hg

PRIMARY EMISSION TARGET MAN-FM COMBUSTION SYSTEM

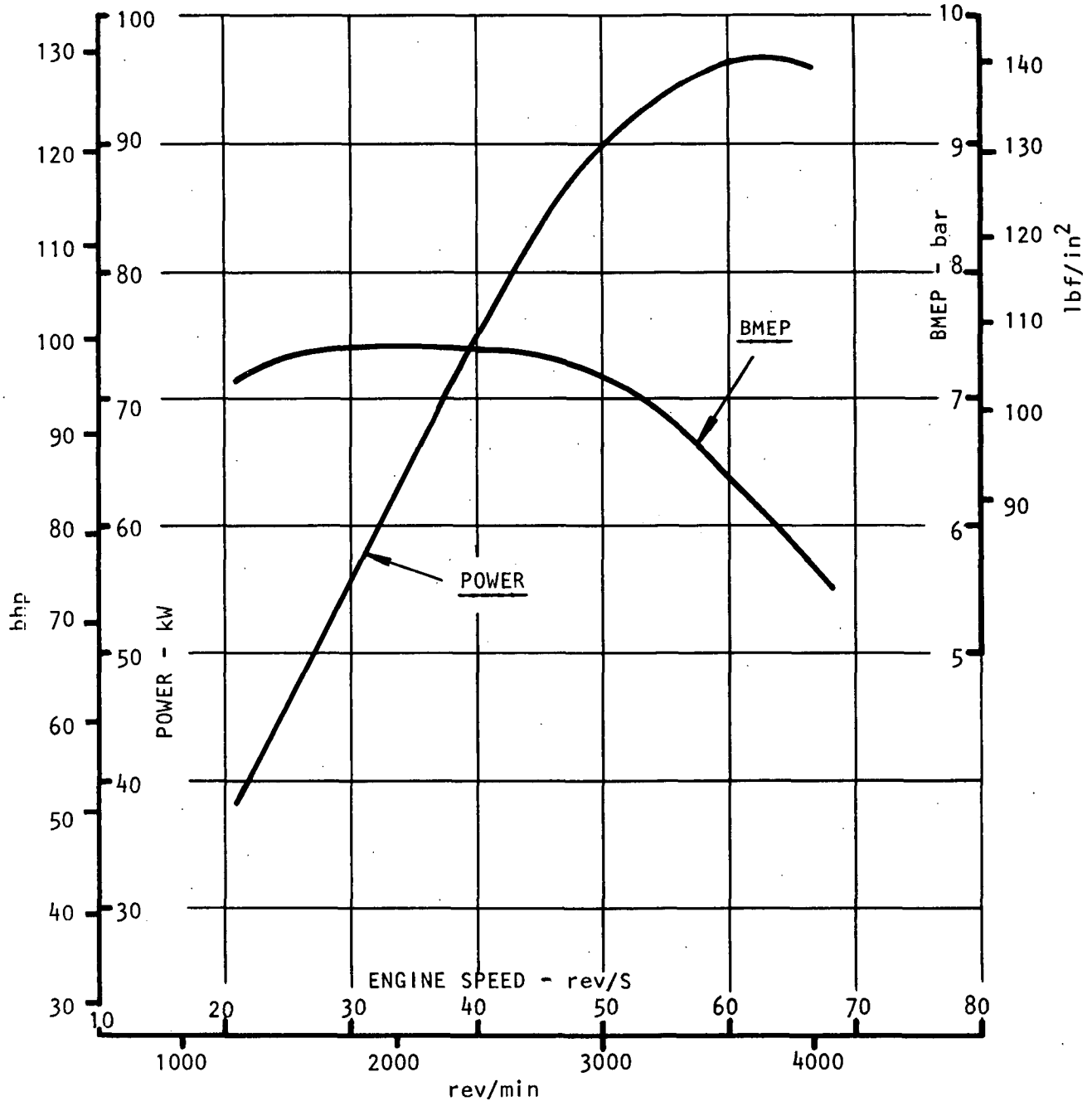

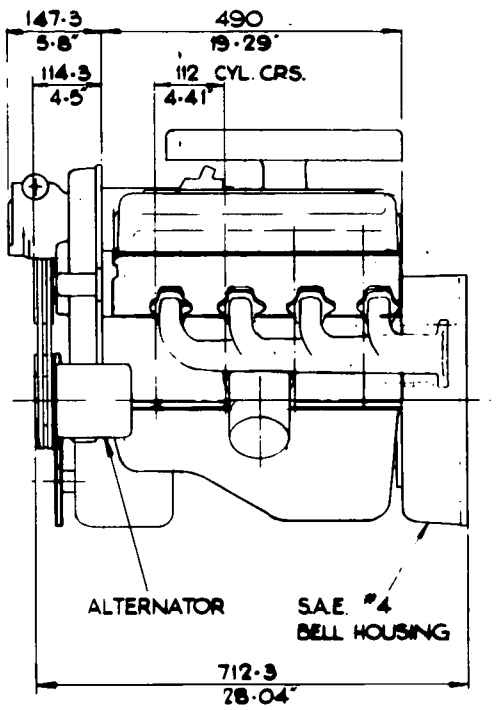

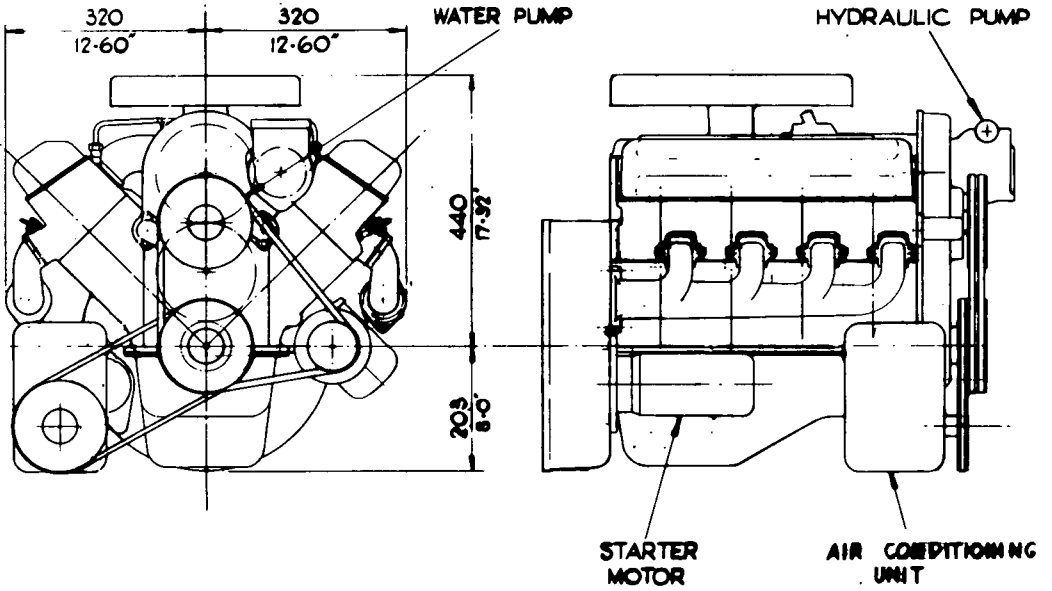

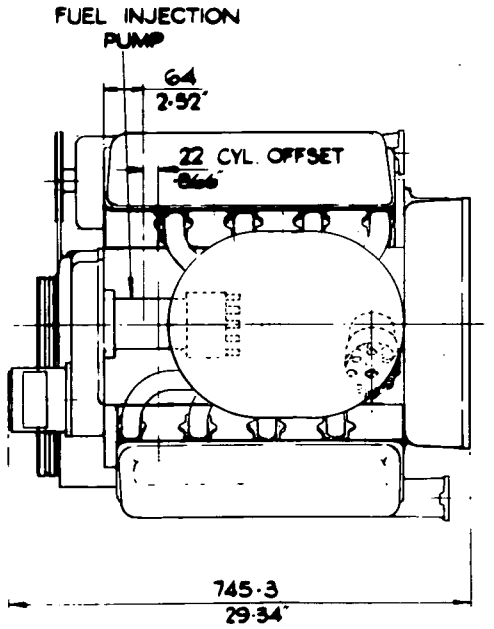

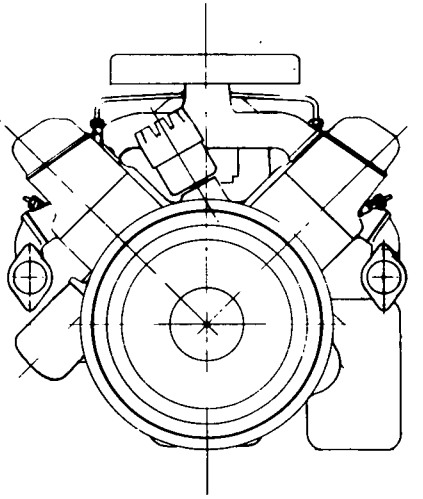

S.I. UNITS	
BORE	93 mm.
STROKE	93 mm.
B.H.P.	96 kW @ 66·7 rev/s.
B.M.E.P.	5·7 bar @ 66·7 rev/s.
	7·4 bar @ 33 rev/s.
P. MAX.	70 bar
CAPACITY	5·05 Litres
BOX VOL.	0·307 m³
EST. WEIGHT	300 kg.

IMPERIAL UNITS	
BORE	3·66 in.
STROKE	3·66 in.
B.H.P.	128 @ 4000 rpm
B.M.E.P.	82·5 lbf/in² @ 4000 rpm
	107 lbf/in² @ 1980 rpm
P. MAX.	1015 lbf/in²
CAPACITY	309 C.I.D.
BOX VOL.	10·8 cu. ft.
EST. WEIGHT	660 lb.

E.P.A. LIGHT DUTY STRATIFIED CHARGE PROJECT
TASK II CONFIGURATION STUDY CATEGORY III
V8 N/A - M.A.N. FM SYSTEM
INSTALLATION DRG.
PRIMARY EMISSION TARGET

3111/22

FIG. 32

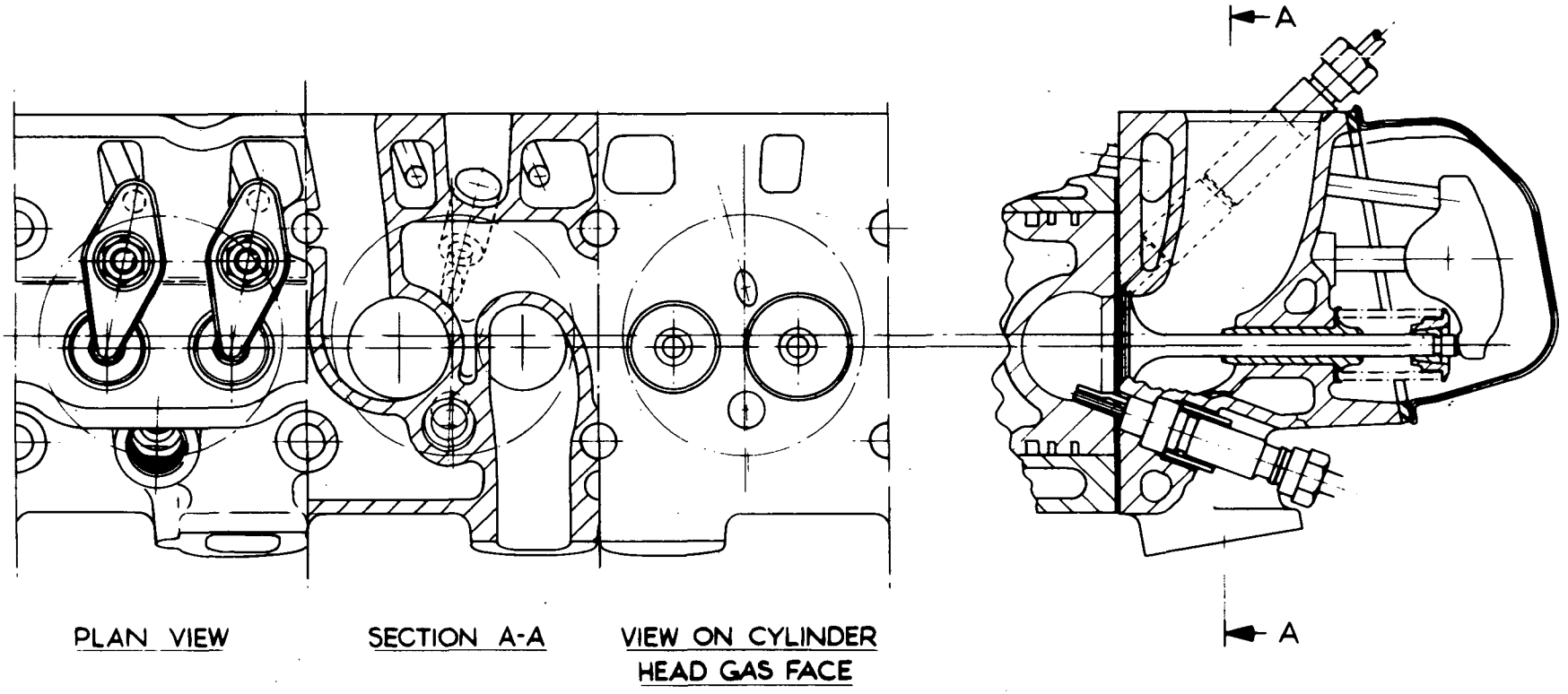

E.P.A. LIGHT DUTY STRATIFIED CHARGE PROJECT
TASK II CONFIGURATION STUDY CATEGORY III
V8 NATURALLY ASPIRATED M.A.N. FM SYSTEM
PRIMARY EMISSION TARGET
CYLINDER HEAD DRG.

FIG. 33

3111/30

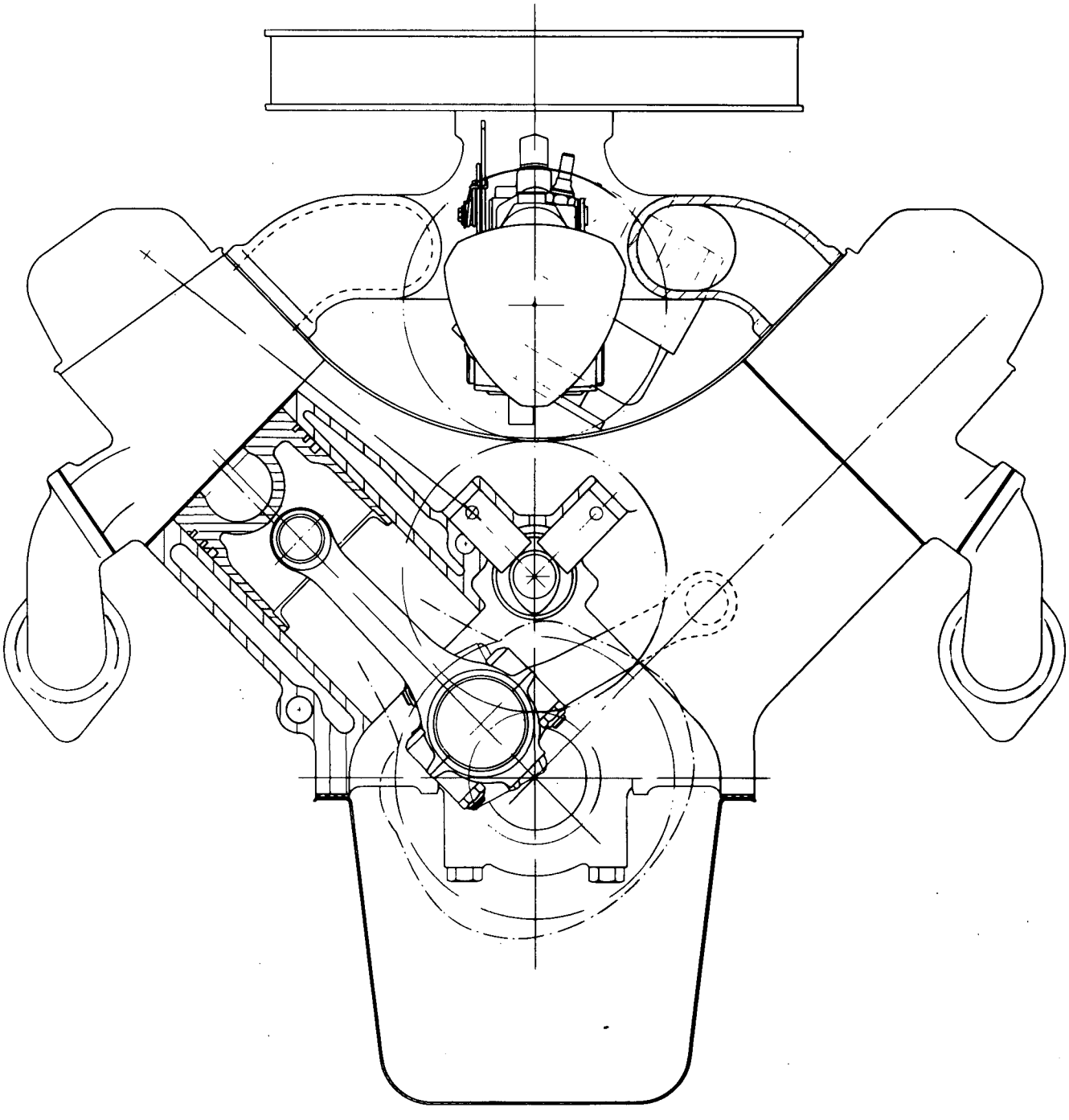

E.P.A. LIGHT DUTY STRATIFIED CHARGE PROJECT
TASK II CONFIGURATION STUDY CATEGORY III
V8 NATURALLY ASPIRATED M.A.N. FM SYSTEM
PRIMARY EMISSION TARGET
CROSS SECTIONAL ARRANGEMENT

RICARDO CONSULTING ENGINEERS

FIG. No. 35
DRG. No. D28891
DATE :- 15.9.75

ESTIMATED PERFORMANCE CURVE FOR

Ø 86 x 79 mm NATURALLY ASPIRATED V8 CONFIGURATION - CATEGORY 4

BARE ENGINE A.I.T. 20°C BARO 760 mm Hg

PRIMARY AND SECONDARY EMISSION TARGET VW COMBUSTION SYSTEM

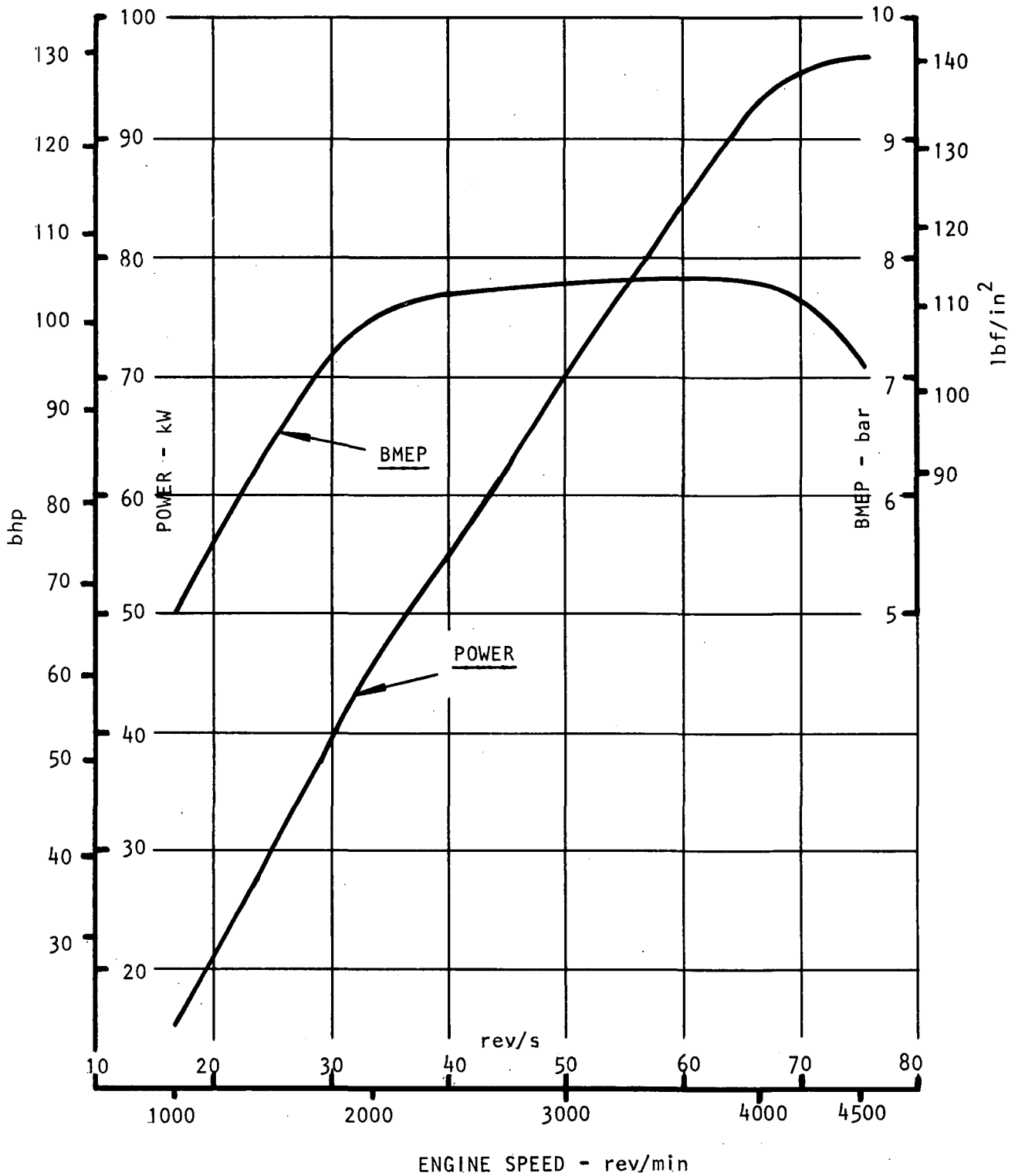

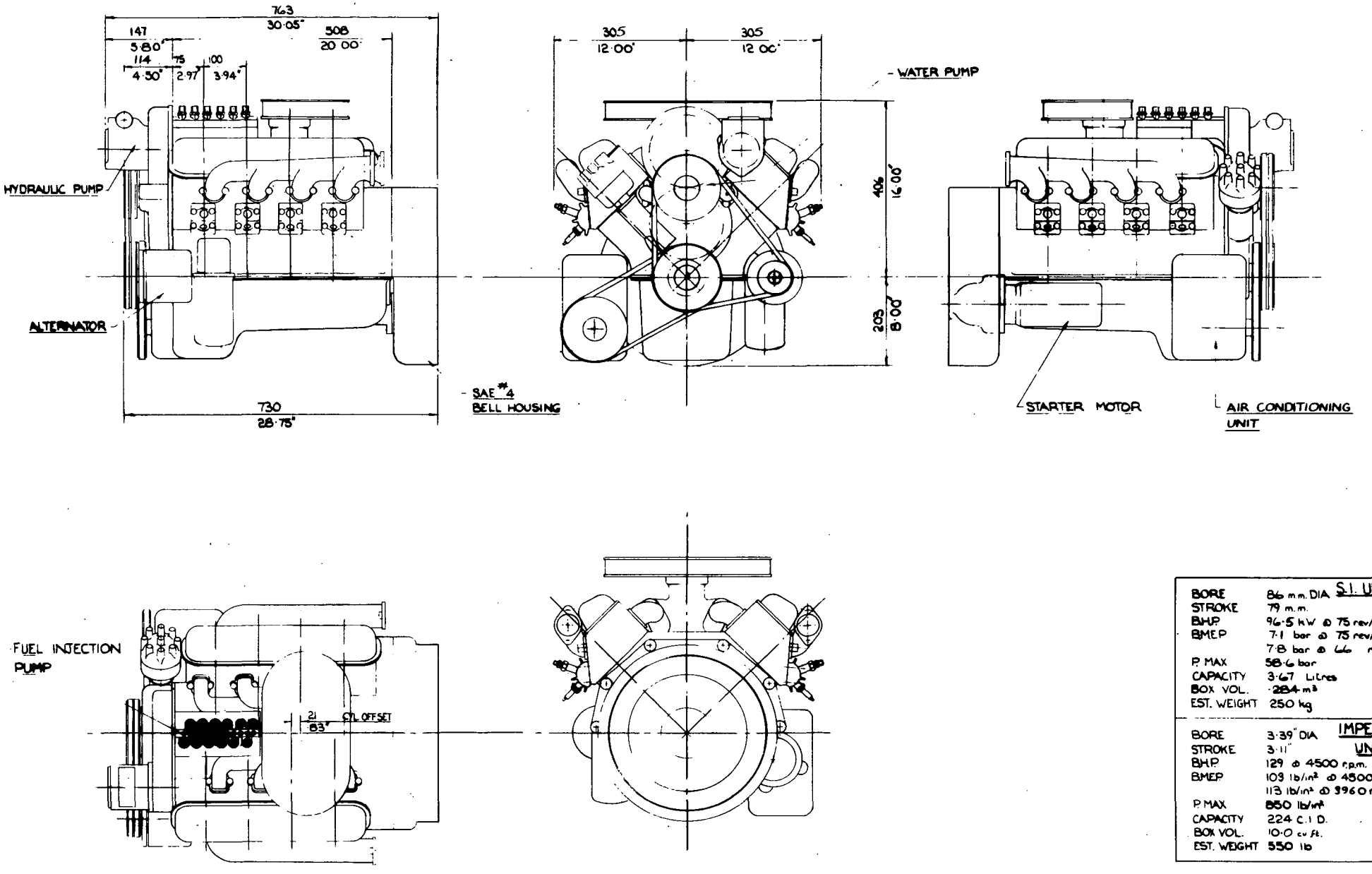

BORE	86 m.m. DIA	S.I. UNITS
STROKE	79 m.m.	
B.H.P.	96·5 kW @ 75 rev/s	
B.M.E.P.	7·1 bar @ 75 rev/s	
	7·8 bar @ 66 rev/s	
P. MAX	58·6 bar	
CAPACITY	3·67 Litres	
BOX VOL.	·284 m³	
EST. WEIGHT	250 kg	
BORE	3·39" DIA	IMPERIAL UNITS
STROKE	3·11"	
B.H.P.	129 @ 4500 r.p.m.	
B.M.E.P.	103 lb/in² @ 4500 r.p.m.	
	113 lb/in² @ 3960 r.p.m.	
P. MAX	850 lb/in²	
CAPACITY	224 C.I.D.	
BOX VOL.	10·0 cu ft.	
EST. WEIGHT	550 lb	

EPA LIGHT DUTY STRATIFIED CHARGE PROJECT.
TASK II CONFIGURATION STUDY CATEGORY IV.
V8. V.W. SYSTEM.
INSTALLATION DRG.
PRIMARY AND SECONDARY EMISSION TARGET.

3111/25

FIG. 36.

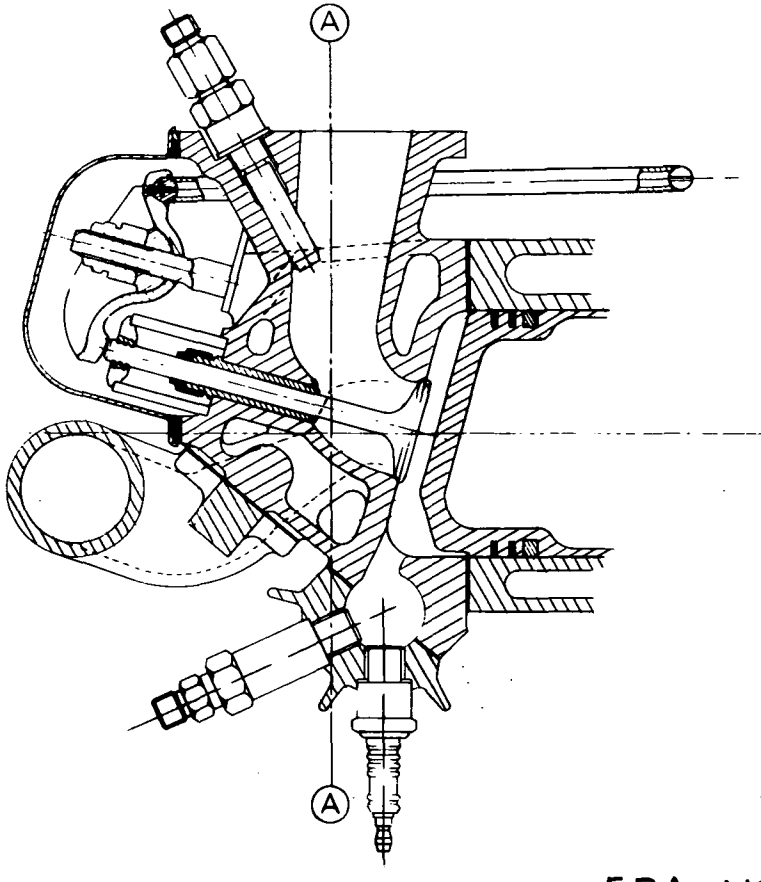

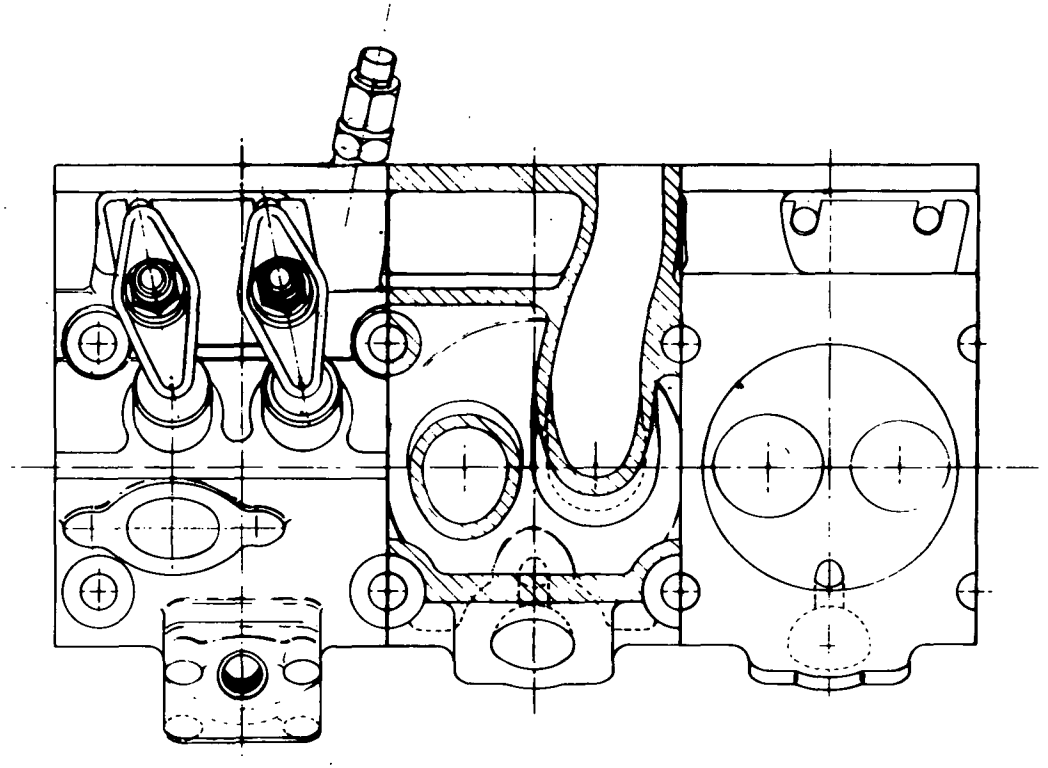

PLAN VIEW SECTION AA VIEW ON CYLINDER HEAD FACE

E.P.A. LIGHT DUTY STRATIFIED CHARGE PROJECT
TASK II CONFIGURATION STUDY CATEGORY IV
V8 VW SYSTEM
CYLINDER HEAD DRG.
PRIMARY AND SECONDARY EMISSION TARGET

FIG. 37.

3111/24

FIG. 38.

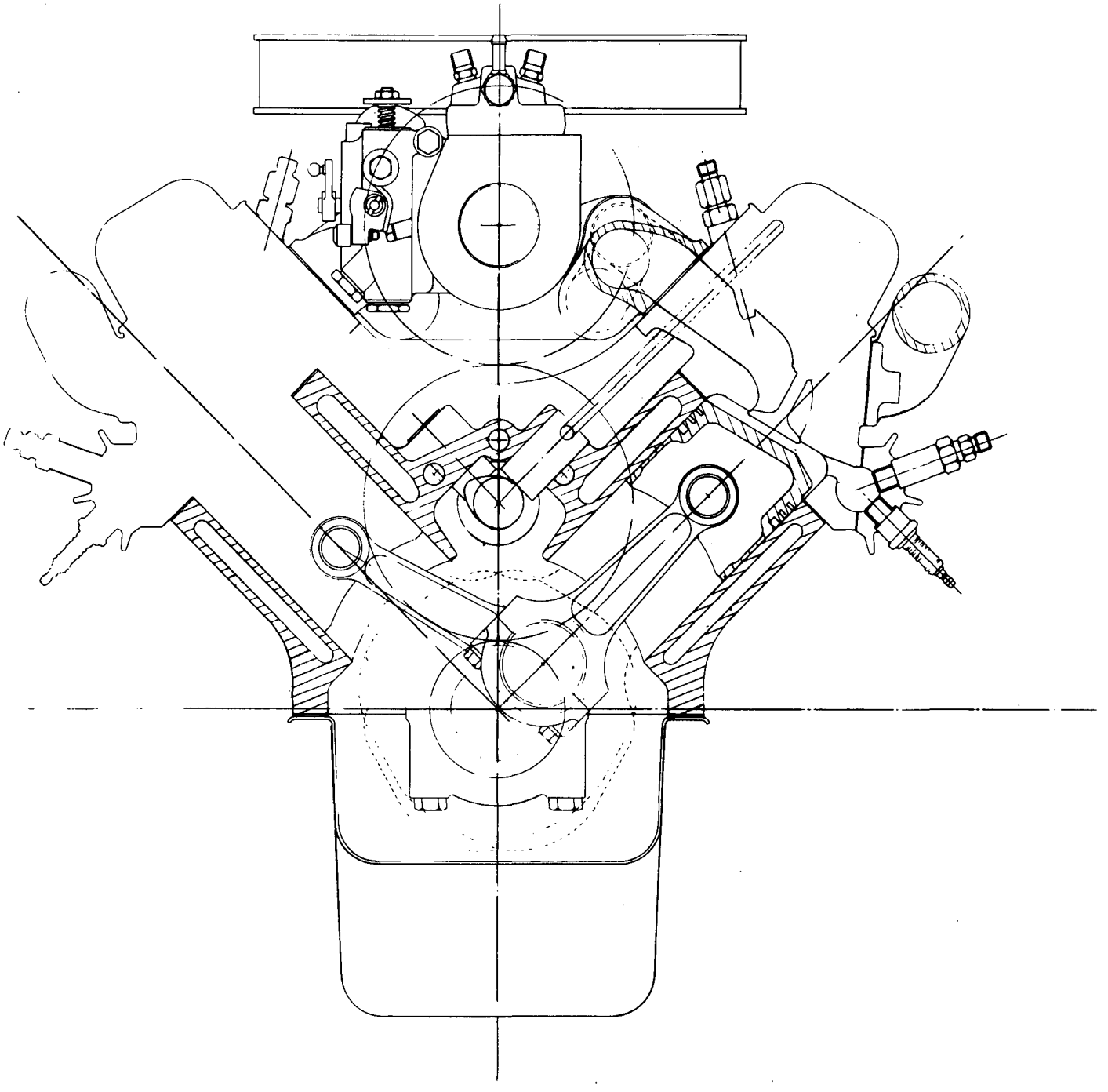

EPA LIGHT DUTY STRATIFIED CHARGE PROJECT.
TASK II CONFIGURATION STUDY CATEGORY IV.
V8. V.W. SYSTEM.
CROSS-SECTIONAL ARRANGEMENT.
PRIMARY AND SECONDARY EMISSION TARGET.

3111/23

RICARDO CONSULTING ENGINEERS

FIG. No. 39
DRG. No. D28892
DATE :- 15.9.75

ESTIMATED PERFORMANCE CURVE FOR
Ø 88 x 88 mm V8 CONFIGURATION - CATEGORY 5

BARE ENGINE A.I.T. 20°C BARO 760 mm Hg

PRIMARY EMISSION TARGET HONDA CVCC COMBUSTION SYSTEM

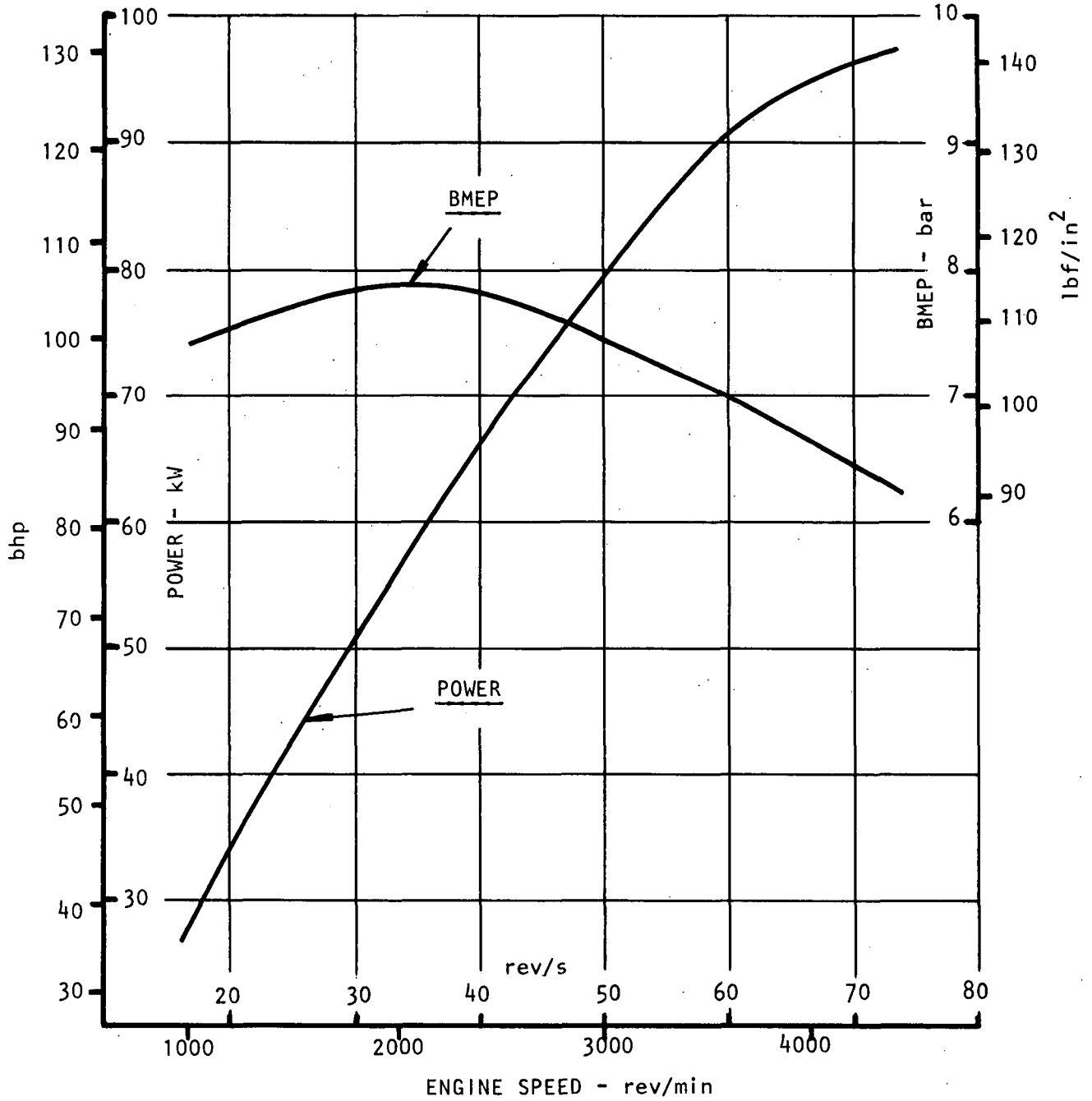

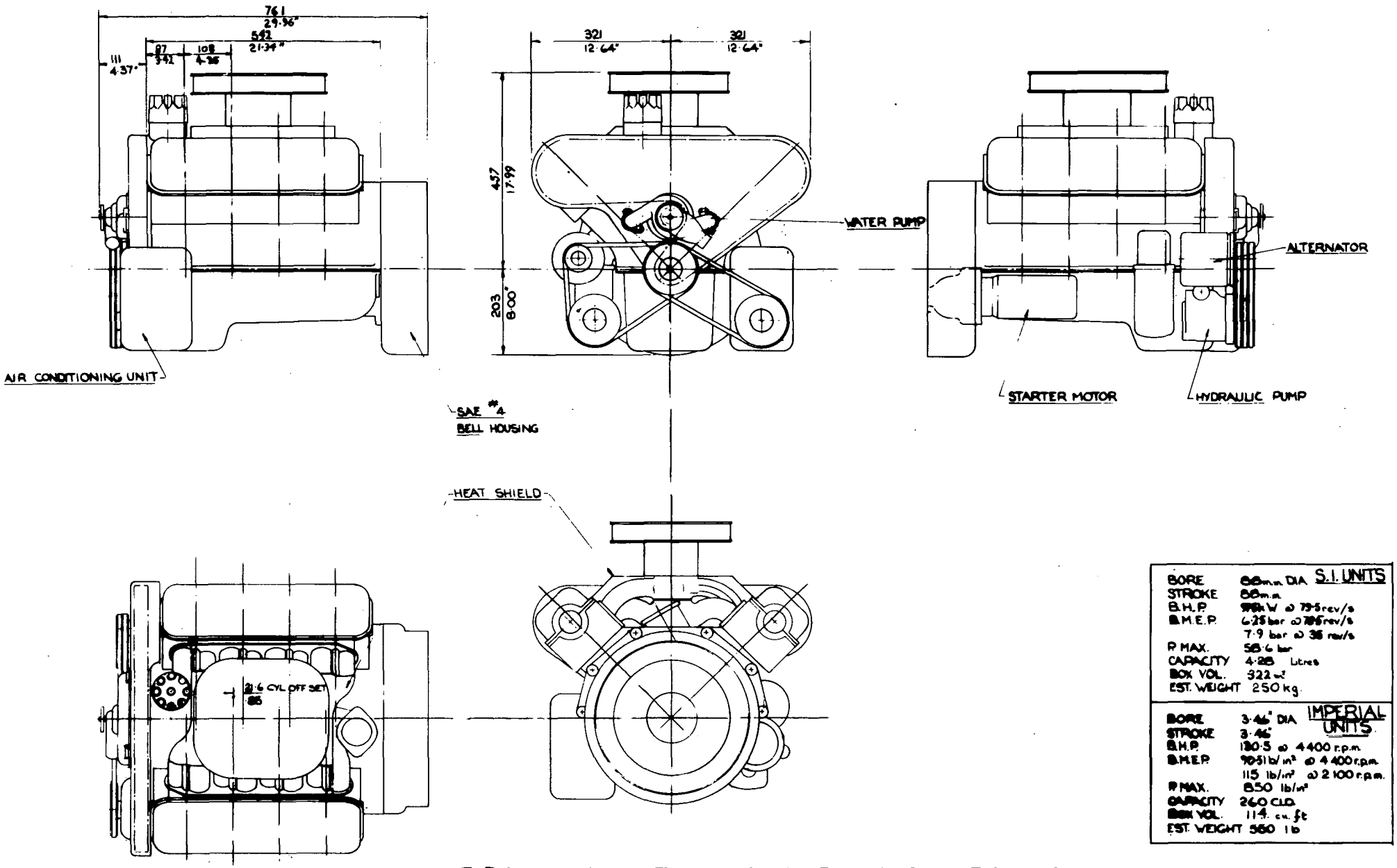

BORE	88 m.m. DIA	S.I. UNITS
STROKE	88 m.m.	
B.H.P.	99 kW @ 73.5 rev/s	
B.M.E.P.	6.25 bar @ 73.5 rev/s	
	7.9 bar @ 36 rev/s	
P MAX.	58.6 bar	
CAPACITY	4.28 Litres	
BOX VOL.	.322 m³	
EST. WEIGHT	250 kg.	

BORE	3.46" DIA	IMPERIAL UNITS
STROKE	3.46"	
B.H.P.	130.5 @ 4400 r.p.m.	
B.M.E.P.	90.51 lb/in² @ 4400 r.p.m.	
	115 lb/in² @ 2100 r.p.m.	
P MAX.	850 lb/in²	
CAPACITY	260 C.I.D.	
BOX VOL.	11.4 cu. ft	
EST. WEIGHT	550 lb	

E.P.A. LIGHT DUTY STRATIFIED CHARGE PROJECT
TASK II CONFIGURATION STUDY CATEGORY V
V8 CVCC SYSTEM
INSTALLATION DRG.
PRIMARY EMISSION TARGET.

3111/28

FIG. 40

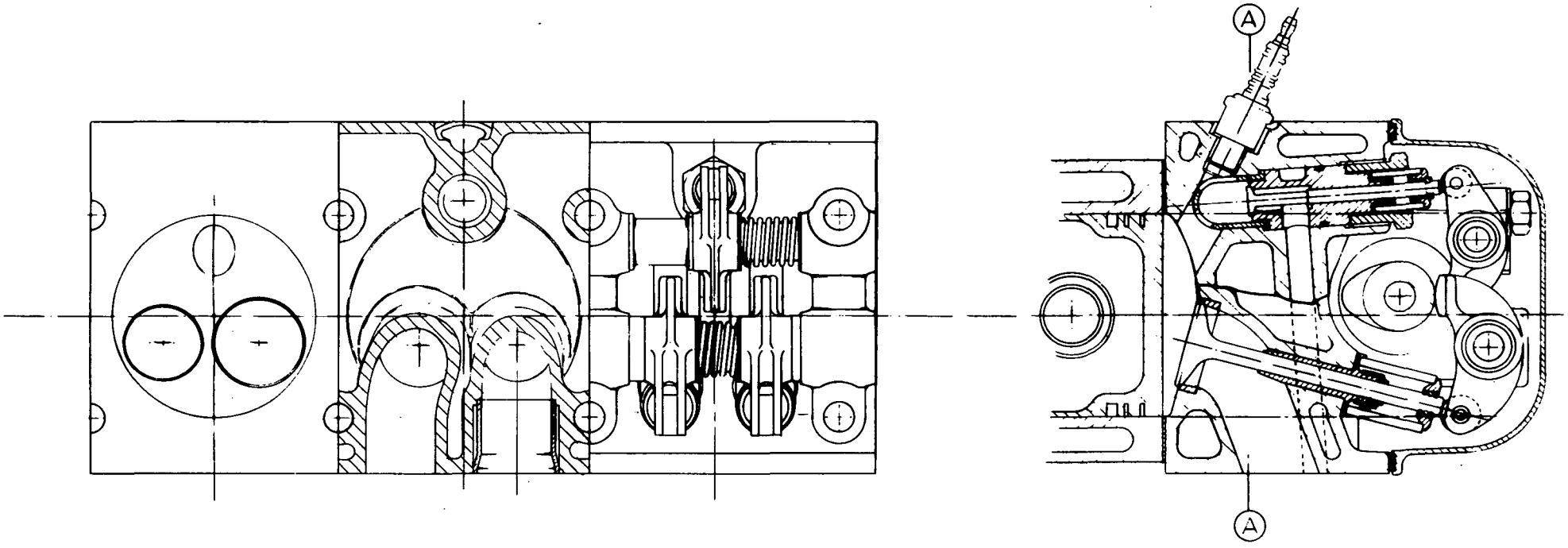

VIEW ON CYLINDER HEAD FACE

SECTION A A

PLAN VIEW

EPA LIGHT DUTY STRATIFIED CHARGE PROJECT.
TASK II CONFIGURATION STUDY CATEGORY V
V8. C.V.C.C. SYSTEM.
CYLINDER HEAD LAYOUT.
PRIMARY EMISSION TARGET.

FIG. 41

3111/27

FIG. 42.

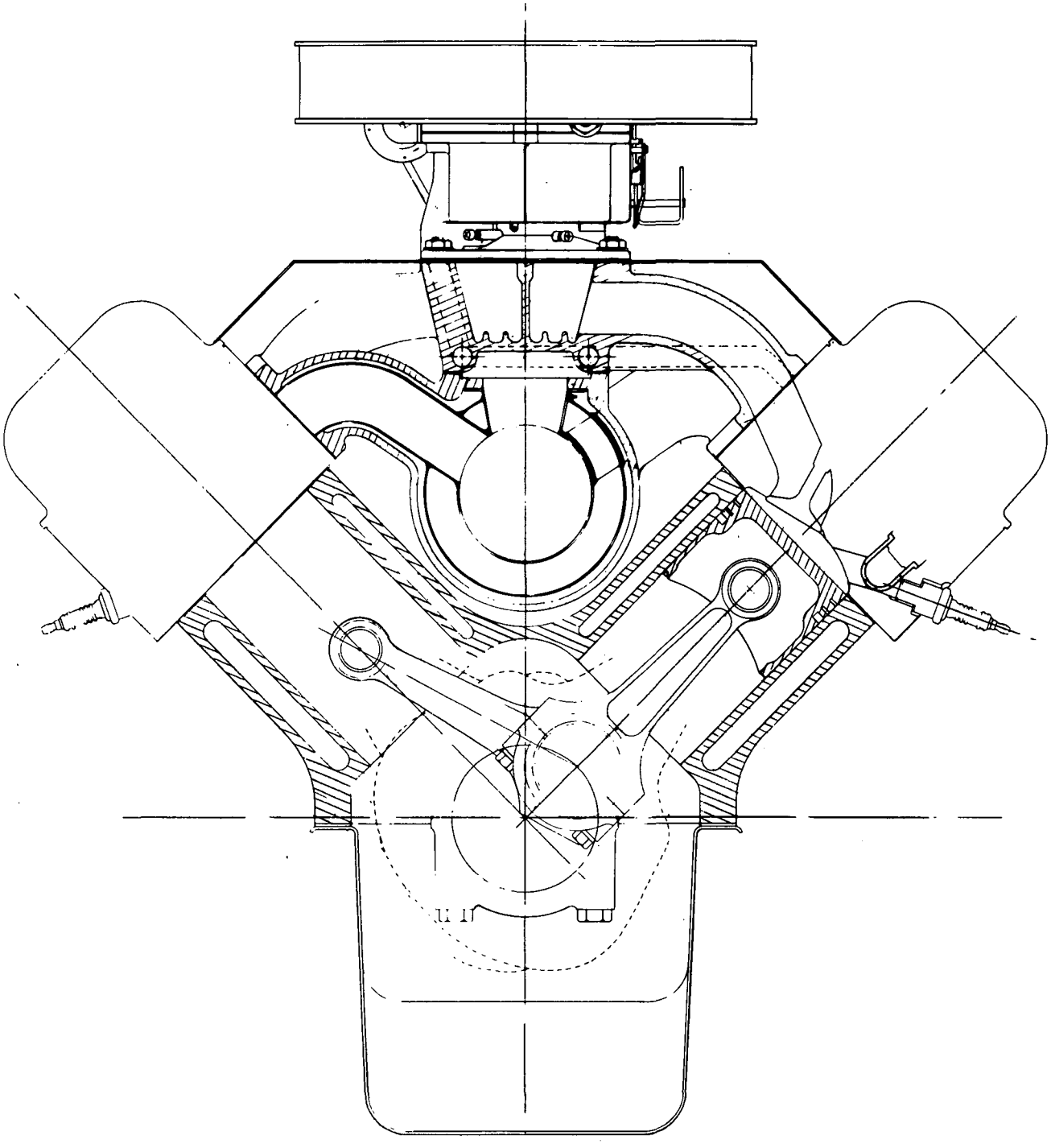

EPA LIGHT DUTY STRATIFIED CHARGE PROJECT.
TASK II CONFIGURATION STUDY CATEGORY V.
V8. C.V.C.C. SYSTEM.
CROSS-SECTIONAL ARRANGEMENT.
PRIMARY EMISSION TARGET.

3111/26

RICARDO CONSULTING ENGINEERS

FIG No 43
DRG No. D28893
DATE - 11.9.75

ESTIMATED PERFORMANCE CURVE FOR

Ø 96 x 96 mm V8 CONFIGURATION - CATEGORY 5

BARE ENGINE A.I.T. 20°C BARO 760 mm Hg

SECONDARY EMISSION TARGET HONDA CVCC COMBUSTION SYSTEM

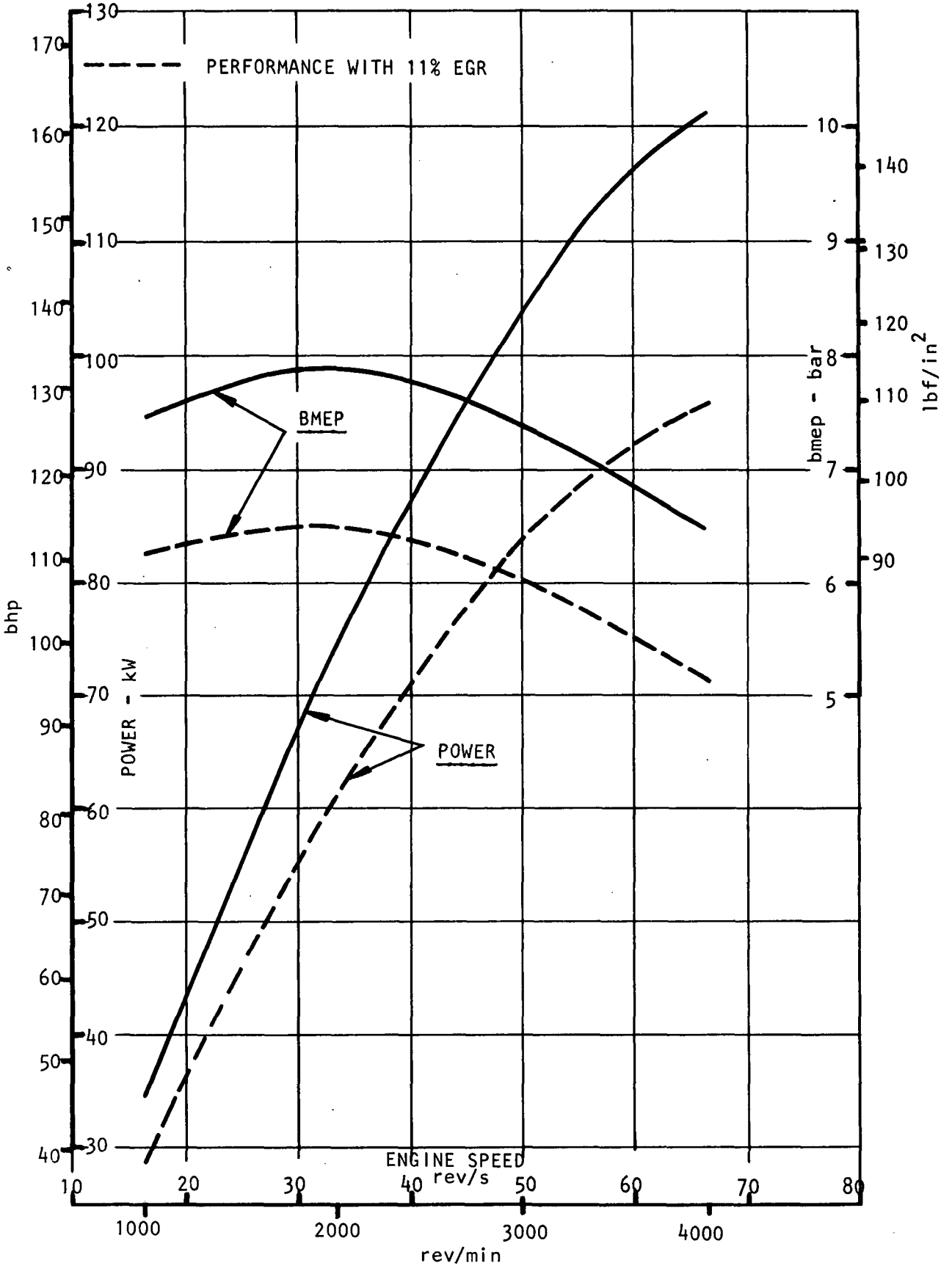

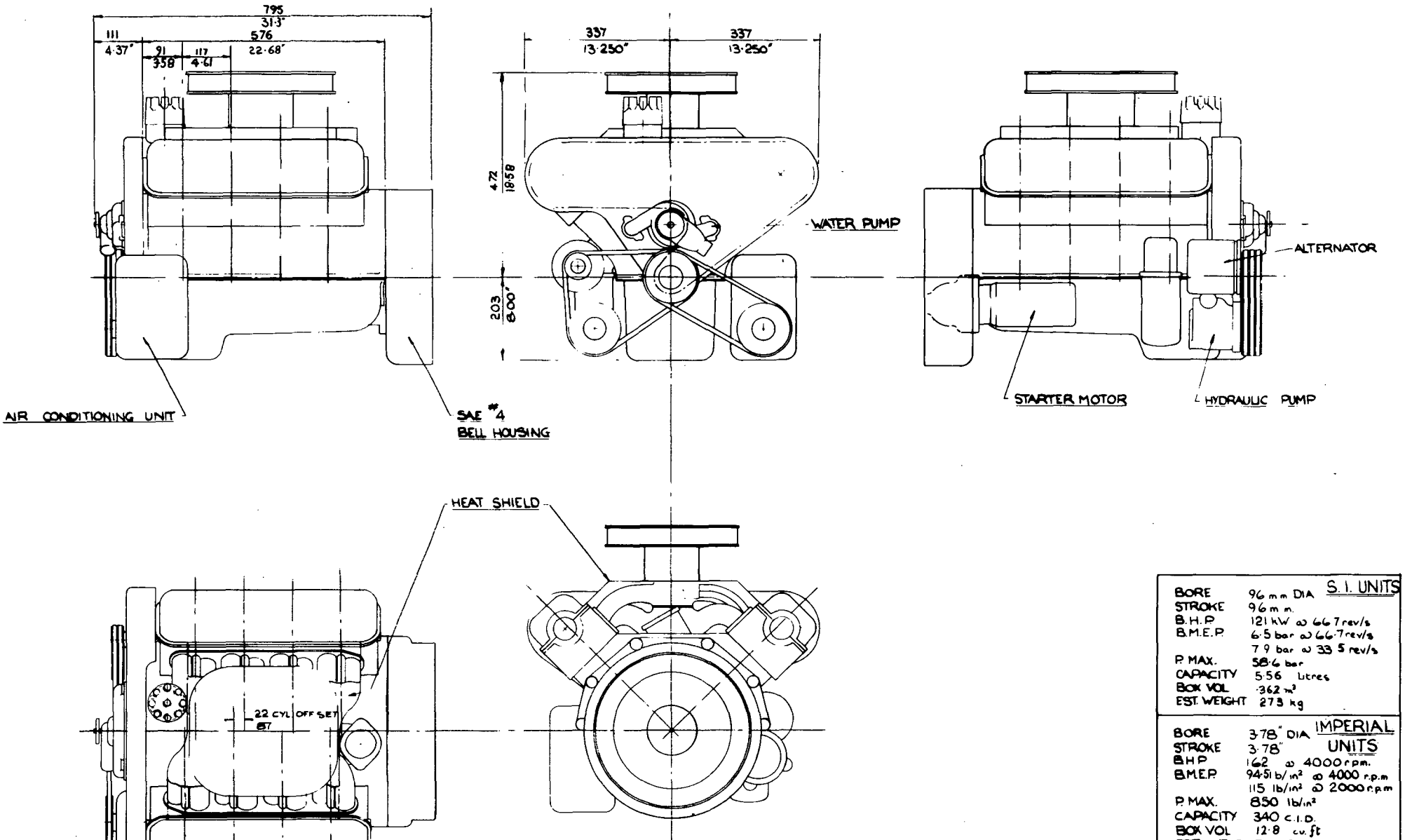

S. I. UNITS	
BORE	96 mm DIA
STROKE	96 mm.
B.H.P	121 kW @ 66·7 rev/s
B.M.E.P	6·5 bar @ 66·7 rev/s
	7·9 bar @ 33·5 rev/s
P. MAX.	58·6 bar
CAPACITY	5·56 litres
BOX VOL	·362 m³
EST. WEIGHT	273 kg

IMPERIAL UNITS	
BORE	3·78" DIA
STROKE	3·78"
B.H.P	162 @ 4000 r.p.m.
B.M.E.P	94·51 lb/in² @ 4000 r.p.m
	115 lb/in² @ 2000 r.p.m
P. MAX.	850 lb/in²
CAPACITY	340 c.i.d.
BOX VOL	12·8 cu ft
EST. WEIGHT	600 lb

E.P.A. LIGHT DUTY STRATIFIED CHARGE PROJECT
TASK II CONFIGURATION STUDY CATEGORY V
V8 C.V.C.C. SYSTEM
INSTALLATION DRG.
SECONDARY EMISSION TARGET

3111/29

FIG. 44.

A STUDY OF STRATIFIED CHARGE FOR LIGHT DUTY POWER PLANTS

SECTION H

COST STUDY

COST ANALYSIS

Since the literature survey contained little information on production costs for the various stratified charge engine, an in-house cost estimate was made for each of the engines designed in the configuration study. The input information for the analysis was obtained from two principle sources.

1. Information supplied to Ricardo on a confidential basis by a number of European manufacturers of automotive vehicles and associated components including fuel injection equipment, carburettors etc. This information was broken down into costs of major engine mechanical components such as block pistons, crankshaft, flywheels, cylinder heads etc.

2. Information contained in two surveys by NAS in May, 1973 and September, 1974 (Ref. 6.32) covering the cost of emission control components. In some cases, the figures from these two references were adjusted to take account of inflation.

In deriving the engine costs, no attempt was made to adjust the figures from projected sales. It was simply assumed that equal numbers of the alternative engines were being produced, and that the rate of production was of the order of 50,000 units/year.

The reasons behind the choice of the individual figures are given below.

1. Item 1 - 4. The cost of the engine assembly was basically determined by the engine size, although additions were added to the CVCC engine to account for the extra valve gear and camshafts.

2. Item 14 and 5. For many of the engines, the fuelling equipment is a major item. The injection pump for each of the engines was considered to have equal production costs, with a small reduction for 6 cylinder engines, and an increase for boost control on the turbocharged engines. The injection equipment cost of the VW engine was particularly high due to the 12 plunger layout and 16 injectors. Some allowance was made for an alternative arrangement using a completely electronic system. The carburettors of the CVCC engine were considered to be 30% more expensive than those of the gasoline engine, and the IL-6 gasoline engine was fitted with electronic fuel injection.

3. An allowance was also made for control equipment on the throttled fuel injected engines, since the throttle must be linked with the fuel injection pump, as well as a signal for engine speed, from the distributor. In many cases, these items must also be linked to the EGR valve.

4. Item 8. Since direct injection stratified charge engines appear to function better with long duration, or multi-strike sparks, an allowance was included for transistorised ignition on these engines.

5. Item 6. The cost of exhaust catalysts was determined by the amount of control required e.g. the cost of catalysts for the secondary target TCCS engine was twice as high as that for the primary target MAN-FM, reflecting the large difference in baseline HC emissions. Surprisingly, the cost of the thermal reactor for the CVCC engines emerged as more expensive than a catalyst.

6. Item 9. At the secondary emission target the exhaust gas recirculated to the inlet of the engines, must be modulated according to the engine air flow, and often it must also be cooled, to reduce the air displacement and heating effects in the engine.

7. Item 10. Other emission control items such as evaporative controls, PCV valves, intake heaters, dieseling solenoids etc., were costed separately and added together. The fuel injected engines had considerable advantages in this area.

8. Item 11. An air pump was included on the gasoline engine.

9. Item 13. A turbocharger was included on two TCCS engines.

Four of the engines considered were similar to those costed by NAS in their January, 1973 report. The comparison of results is:-

	Ricardo Estimate 1975 $	NAS Estimate 1972 $	Ratio
Gasoline V-8	595	320	1.86
Primary CVCC	600	300	2.0
IDI Diesel	701	343	2.04
Rotary	667 (with carburettor 560)	274	2.42 (2.04)

The rotary engine estimates were not directly comparable, as the Ricardo configuration had fuel injection. The figure in brackets is an alteration to include a carburettor rather than fuel injection for comparison purposes.

The ratio of estimates is consistent among the different engines, but the ratio of 2 between the two estimates is rather high. Some of the difference can be accounted to inflation, and the remainder is due to the higher Ricardo estimate for the basic engine assembly.

STRATIFIED CHARGE ENGINE - FEASIBILITY STUDY

BAR CHART SHOWING ESTIMATED MANUFACTURING COST BREAKDOWN FOR THE VARIOUS POWER PLANTS - U.S. DOLLARS

1. CYLINDER BLOCK
2. CON-RODS, CRANKSHAFT, VALVE GEAR, FLYW HEEL, ETC.
3. PISTONS
4. CYLINDER HEAD(S)
5. CONTROL GEAR BETWEEN EGR, THROTTLE, DISTRIBUTOR AND INJECTION PUMP
6. MANIFOLDS & HEATING PIPEWORK EFE.
7. EXHAUST REACTOR AND/OR CATALYST
8. IGNITION DISTRIBUTOR, COIL, PLUGS
9. EGR VALVE AND PIPEWORK
10. OTHER EMISSION CONTROL GEAR: EVAP CONTROL, P.C.V. INTAKE HEATER, TRANSMISSION CONTROLLED SPARK, SPARK ADVANCE CONTROL, ANTI DIESELING SOLENOID, ETC. ETC.
11. AIR PUMP
12. STARTER MOTOR, ALTERNATOR VACUUM PUMP, HYDRAULIC PUMP
13. TURBOCHARGER
14. CARBURETTOR AND/OR INJECTION PUMP, PRIMARY INJECTORS, SECONDARY INJECTORS

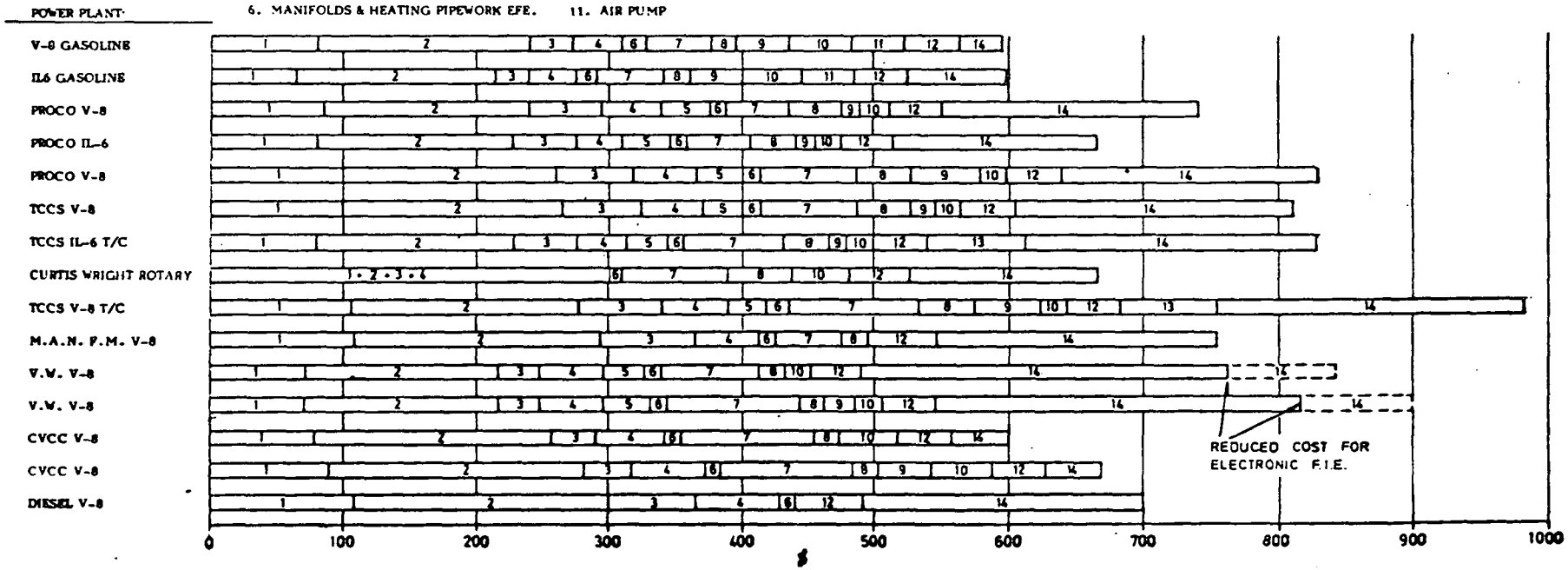

A STUDY OF STRATIFIED CHARGE FOR LIGHT DUTY POWER PLANTS

SECTION I

POWER PLANT RATING

POWER PLANT RATING

SUMMARY

The quantitative comparison of different power plants was one of the major aims of the study. This section describes the rating methodology which was developed, how it was applied to the potentially viable power plants and the results of that application.

The rating methodology involves the identification of performance aspects or requirements for a power plant. Each aspect is given a weighting indicating its relative importance. Each power plant is then given a 'rating' indicating how well it met the requirements of each performance aspect. Multiplication of each 'rating' by the appropriate 'weighting' and summation of the products then gives a numerical 'overall rating'. Comparison of the 'overall ratings' allows the power plants to be compared on a numerical basis.

The individual ratings for each performance aspect for each power plant are listed and the reasons for these ratings are discussed.

The 'overall ratings' indicate that the rating achieved by the conventional gasoline engines at primary emission levels can be closely approached by two stratified charge systems (PROCO and CVCC). The remaining contenders can be considered contenders all achieving varying degrees of viability.

Of the engines configured for the secondary emissions targets, the Honda CVCC combustion system emerged as the best, closely followed by Ford PROCO and VW.

POWER PLANT RATING

INTRODUCTION

In order to provide a quantitative assessment of the relative merits of the various power plants selected, the major aim of the study was to rate the performance aspects of each power plant. The methodology already developed for the light duty diesel engine study was considered suitable for this application. By the use of the existing methodology a direct comparison between the assessment of the existing power plants and those rated in the earlier survey was possible. Those aspects which render a particular power plant viable or not for a light duty application were also identified and quantified. Furthermore the methodology allows an assessment of changes in a particular area as well as highlighting areas worthy of effort to make a particular configuration more suitable for use in a given environment.

Approach of Rating System

The fitness of any power plant for a given duty is a combination of the excellence with which it meets various performance aspects or requirements and the relative importance of those individual aspects. The application of any rating system must thus involve five stages:-

(1) Identification of performance aspects.

(2) Estimation of relative importance of those aspects.

(3) Estimation of how well a particular power plant meets a performance aspect.

(4) Assessment of overall merit of that power plant.

(5) Comparison with overall merit of other power plants.

Performance Aspects

The methodology employed in the light duty diesel engine study established twenty-six performance aspects by which each power plant was rated. Each of these performance aspects was individually weighted as a measure of its relative importance; the final score being the product of the rating and the weighting. For the current study the same performance aspects and weightings were employed

The performance aspects are listed in the following table together with the weighting factors.

	Aspect	Weighting
1	Smoke	4.48
2	Particulates	2.14
3	Odour	4.48
4	NO_x	3.92
5	HC	3.99
6	CO	3.61

	Aspect	Weighting
7	SO_2	3.48
8	HC reactivity	1.83
9	Evaporative Emissions	1.60
10	Miscellaneous Emissions	0.98
11	Noise (Drive-by)	6.32
12	Package volume	2.61
13	Package weight	2.59
14	Fuel economy	12.20
15	Fuel cost	5.40
16	Vehicle first cost	4.65
17	Maintenance cost	4.35
18	Startability	4.85
19	Hot driveability	4.48
20	Cold driveability	3.52
21	Torque rise	1.98
22	Durability	4.80
23	Heat loss	2.18
24	Fire risk	3.55
25	Idling noise	3.83
26	Vibration and torque recoil	2.18

In some of these areas, estimates on the performance of the various engines had been made in the configuration study, and the results are summarised in the summary table of that section.

How Well a Performance Aspect or Requirement is Met

It is necessary that a rating scale be devised so that a quantitative assessment of how well a particular power plant meets a given performance aspect can be made. The above list of performance aspects shows that although some aspects could be quickly assessed in a numerical fashion, many others are essentially qualitative and any rating scale should be able to cover all aspects.

As expected, some difficulty was experienced in relating a purely subjective impression to a linear quantitative scale, but after some consideration the

following system was adopted as giving the numerical scale easily relatable subjective key points. The numbers without definition are an interpolation of the surrounding merit definitions.

Merit Rating Scale

0	Totally unacceptable
1	
2	Bad
3	
4	Poor
5	Acceptable
6	
7	Good
8	
9	Best practical
10	Perfect

Assessment of Overall Merit of the Power Plant

The rating system evolved allows an immediate quantitative assessment of the overall merit of the power plant and this is accomplished by multiplying each aspect 'rating' by its appropriate 'weighting' and summing all the products. With a total weighting of 100 and a merit scale of 0-10 as above the maximum possible is 1000.

The relative merit of various power plants can be assessed immediately by comparing their total scores, the power plant with the highest score being the best. An idea of the absolute merit of the power plants can also be obtained if the score is divided by 100 and the quotient related to the above rating scale, e.g. a score of 1000/100 = 10 is a 'perfect' power plant. A score of 500/100 = 5 is an 'acceptable' power plant.

Use of the Rating System in the Study

In order to apply the rating system to the power plants considered in this study a committee was used to assess the various ratings. The committee consisted of four experienced members of Ricardo staff and great care was taken to ensure that the committee had no bias to either diesel, gasoline or any of the stratified charge configurations considered in this study. The power plants considered were those described in the 'engine configuration' section of the report with the addition of the two gasoline engines and the IDI diesel engine described briefly in that section. The engines considered are listed below, together with the categories in which they are divided and their respective emission targets:-

	Engine	Category	Emission Target
1	V-8 'American' Gasoline	-	primary
2	IL-6 'European' Gasoline	-	primary
3	PROCO V-8	I	primary
4	PROCO IL-6	I	primary
5	PROCO V-8	I	secondary

	Engine	Category	Emission Target
6	TCCS V-8	II	primary
7	TCCS IL-6 T/C	II	primary
8	Curtiss-Wright Rotary	II	primary
9	TCCS V-8 T/C	II	secondary
10	MAN-FM V-8	III	primary
11	VW V-8	IV	primary
12	VW V-8	IV	secondary
13	CVCC V-8	V	primary
14	CVCC V-8	V	secondary
15	IDI Diesel V-8	-	primary

Each of the power plants above were considered for the emission targets shown and in some cases the secondary target was also considered. The quantity of exhaust pollutants for the two target levels are shown below measured according to the CVS-CH test procedure:-

Primary Targets

HC	0.41 g/mile
CO	3.4 g/mile
NO_x	1.5 g/mile

Secondary Targets

HC	0.41 g/mile
CO	3.4 g/mile
NO_x	0.4 g/mile

Results of Rating Assessment

The following rating assessment is sub-divided into 26 sections each corresponding to the 26 performance aspects of the rating system. The score allocated to each of the 15 power plants is shown in a summary table in each section together with the weighted rating.

Each section also contains brief notes on the derivation of the various scores. A complete score table is shown at the end of this section.

1. Smoke (Weighting 4.48)

Engine	Emission Target	Score	Rating
V-8 GASOLINE	Primary	9	40.32
IL-6 GASOLINE	Primary	9	40.32
PROCO V-8	Primary	8.5	38.08
PROCO IL-6	Primary	8.5	38.08
PROCO V-8	Secondary	8.5	38.08
TCCS V-8	Primary	6	26.88
TCCS IL-6 T/C	Primary	5.5	24.62
CURTISS-WRIGHT ROTARY	Primary	6	26.88
TCCS V-8 T/C	Secondary	5.5	24.64
MAN-FM V-8	Primary	6	26.88
VW V-8	Primary	8.5	38.08
VW V-8	Secondary	8.5	38.08
CVCC V-8	Primary	9	40.32
CVCC V-8	Secondary	9	40.32
DIESEL V-8	Primary	6	26.88

The absolute smoke limit at which an engine is limited varies considerably from country to country and even between manufacturers, some simply complying with legislative requirements and others aiming for significantly lower levels. For passenger car use, maximum smoke levels must be selected on an aesthetic basis in order to avoid public criticism. From European experience, Ricardo would recommend that maximum steady state smoke levels of 5-8% opacity should be aimed for. The combination of these low smoke levels with the high power/weight ratio of the vehicle should result in the exhaust being at least acceptable from the candidate power plants. However, the stratified charge engines vary from category to category in their smoke limited performance.

In rating the conventional gasoline engines with a score of 9 (the best practical), it was considered that no significant quantity of smoke was emitted: this also being applicable to the CVCC engines in category V, where the fuel supply is carburetted. The PROCO engines have low smoke levels due to the early fuel injection (Score 8.5). Similarly the VW engines were rated good (8.5). The TCCS, MAN-FM and Rotary engines were considered to have similar smoke characteristics to the diesel engine and were rated accordingly; the two turbocharged TCCS engines being down graded ½ a point due to the need to employ boost controlled fuel injection pumps.

2. Particulates (Weighting 2.14)

Engine	Emission Target	Score	Rating
V-8 GASOLINE	Primary	7	14.98
IL-6 GASOLINE	Primary	7	14.98
PROCO V-8	Primary	6.5	13.91
PROCO IL-6	Primary	6.5	13.91
PROCO V-8	Secondary	6.5	13.91
TCCS V-8	Primary	3	6.42
TCCS IL-6 T/C	Primary	3	6.42
CURTISS-WRIGHT ROTARY	Primary	3	6.42
TCCS V-8 T/C	Secondary	3	6.42
MAN-FM V-8	Primary	3	6.42
VW V-8	Primary	7	14.98

Engine	Emission Target	Score	Rating
VW V-8	Secondary	7	14.98
CVCC V-8	Primary	7	14.98
CVCC V-8	Secondary	7	14.98
DIESEL V-8	Primary	2	4.28

Current data is still insufficient to come to a final conclusion concerning this topic. With a lack of standards to judge by the conventional gasoline engine running on lead free fuel must be considered good; worthy of seven points, and the diesel, with levels of 10 times as high, was considered bad, with a score of two points. With the limited data available, Ricardo feel confident to predict the stratified charge engine particulate levels in terms of those already known. It was considered therefore that the VW and CVCC engines would have similar levels to those of the conventional gasoline engines as they have similar combustion characteristics (Score 7), and the TCCS, MAN-FM and Rotary engines approach the level of the diesel (Score 3). There is some evidence to indicate that the PROCO particulate levels may be twice that of the conventional gasoline engine; but still good (Score 6.5).

If particulate levels are to be the subject of legislation, the lower rated engines would need after treatment in the form of particulate filters and in this area further work would have to be carried out.

3. Odour (Weighting 4.48)

Engine	Emission Target	Score	Rating
V-8 GASOLINE	Primary	6	26.88
IL-6 GASOLINE	Primary	6	26.88
PROCO V-8	Primary	6	26.88
PROCO IL-6	Primary	6	26.88
PROCO V-8	Secondary	6	26.88
TCCS V-8	Primary	4.5	20.16
TCCS IL-6 T/C	Primary	4.5	20.16
CURTISS-WRIGHT ROTARY	Primary	4.0	17.92
TCCS V-8 T/C	Secondary	4.5	20.16
MAN-FM V-8	Primary	3.0	13.44
VW V-8	Primary	5.0	22.4
VW V-8	Secondary	5.0	22.4
CVCC V-8	Primary	6.0	26.88
CVCC V-8	Secondary	6.0	26.88
DIESEL V-8	Primary	4.0	17.92

It was generally agreed that the conventional gasoline power plants are good from the point of view of odour but were down graded 1 point to 6 on the grounds that with a cold engine and using catalyst, some problems arose. The PROCO engines were reported to be good on odour and were awarded the same score as were the CVCC engines. The diesel engine is known to be relatively poor in this respect and was awarded 4 points. The MAN-FM power plant, known to have an odour problem, was awarded 3 points. The VW engines were considered to be acceptable (5 points) although little data was available and the TCCS were rated marginally better than the diesel at 4.5 points. The Rotary engine is also known to have an odour problem (awarded 4 points) due to poor scavenging of end spaces and poor surface to volume ratio.

4. NO_x (Weighting 3.92)

Engine	Emission Target	Score	Rating
V-8 GASOLINE	Primary	5	19.6
IL-6 GASOLINE	Primary	5	19.6
PROCO V-8	Primary	5	19.6
PROCO IL-6	Primary	5	19.6
PROCO V-8	Secondary	5	19.6
TCCS V-8	Primary	6	23.52
TCCS IL-6 T/C	Primary	6	23.52
CURTISS-WRIGHT ROTARY	Primary	7	27.44
TCCS V-8 T/C	Secondary	5	19.60
MAN-FM V-8	Primary	7	27.44
VW V-8	Primary	7	27.44
VW V-8	Secondary	5	19.6
CVCC V-8	Primary	5	19.6
CVCC V-8	Secondary	5	19.6
DIESEL V-8	Primary	5	19.6

With this performance aspect and with all the others involving legislative requirements it was assumed that all the power plants selected for rating could at least achieve the levels required by such legislation. Where the legal requirements were just met, with or without treatment, an acceptable rating was scored and if any margin was available, with or without aid, an additional one or two points were awarded. Thus the score table shows the majority of the power plants being able to achieve the 1.5 g/mile NO_x level during the CVS-CH cycle with a score of 5 points, the remainder of the engines having a better score. All the power plants entered for the secondary level of NO_x (.4 g/mile) achieved a merit rating of 5 points.

5. HC (Weighting 3.99)

Engine	Emission Target	Score	Rating
V-8 GASOLINE	Primary	5	19.95
IL-6 GASOLINE	Primary	5	19.95
PROCO V-8	Primary	5	19.95
PROCO IL-6	Primary	5	19.95
PROCO V-8	Secondary	5	19.95
TCCS V-8	Primary	5	19.95
TCCS IL-6 T/C	Primary	5	19.95
CURTISS-WRIGHT ROTARY	Primary	5	19.95
TCCS V-8 T/C	Secondary	5	19.95
MAN-FM V-8	Primary	5	19.95
VW V-8	Primary	5	19.95
VW V-8	Secondary	5	19.95
CVCC V-8	Primary	5	19.95
CVCC V-8	Secondary	5	19.95
DIESEL V-8	Primary	5	19.95

In this performance aspect all the power plants were considered capable of achieving an acceptable level of HC during the CVS-CH cycle. No particular engine stood out as superior to the rest so all achieved a merit rating of 5 points.

6. CO (Weighting 3.61)

Engine	Emission Target	Score	Rating
V-8 GASOLINE	Primary	5	18.05
IL-6 GASOLINE	Primary	5	18.05
PROCO V-8	Primary	5	18.05
PROCO IL-6	Primary	5	18.05
PROCO V-8	Secondary	5	18.05
TCCS V-8	Primary	5	18.05
TCCS IL-6 T/C	Primary	5	18.05
CURTISS-WRIGHT ROTARY	Primary	5	18.05
TCCS V-8 T/C	Secondary	5	18.05
MAN-FM V-8	Primary	5	18.05
VW V-8	Primary	5	18.05
VW V-8	Secondary	5	18.05
CVCC V-8	Primary	5	18.05
CVCC V-8	Secondary	5	18.05
DIESEL V-8	Primary	6	21.66

Here again all the engines were expected to achieve an acceptable level of CO with the diesel awarded an extra point because of its ability to achieve low levels without treatment

7. SO_2 (Weighting 3.48)

Engine	Emission Target	Score	Rating
V-8 GASOLINE	Primary	5	17.4
IL-6 GASOLINE	Primary	5	17.4
PROCO V-8	Primary	5	17.4
PROCO IL-6	Primary	5	17.4
PROCO V-8	Secondary	5	17.4
TCCS V-8	Primary	5	17.4
TCCS IL-6 T/C	Primary	5	17.4
CURTISS-WRIGHT ROTARY	Primary	5	17.4
TCCS V-8 T/C	Secondary	5	17.4
MAN-FM V-8	Primary	5	17.4
VW V-8	Primary	5	17.4
VW V-8	Secondary	5	17.4
CVCC V-8	Primary	5	17.4
CVCC V-8	Secondary	5	17.4
Diesel V-8	Primary	2	6.96

This pollutant is totally dependent on the sulphur content of the fuel and the amount of fuel being burnt. In assessing the diesel for SO_2 it was assumed that the sulphur content of U.S. light distillate (DF 1) is similar to that found in Europe (i.e. 0.2 - 0.5%). In theory the sulphur can be completely extracted from the fuel but economic considerations have ruled this out to date. The sulphur content of gasoline is very low ($<0.1\%$) and as no legislation exists all the gasoline powered engines were rated as acceptable (5 points) and the diesel rated as bad (2 points).

8. HC Reactivity (Weighting 1.83)

Engine	Emission Target	Score	Rating
V-8 GASOLINE	Primary	5	9.15
IL-6 GASOLINE	Primary	5	9.15
PROCO V-8	Primary	7	12.81
PROCO IL-6	Primary	7	12.81
PROCO V-8	Secondary	7	12.81
TCCS V-8	Primary	7	12.81
TCCS IL-6 T/C	Primary	7	12.81
CURTISS-WRIGHT ROTARY	Primary	7	12.81
TCCS V-8 T/C	Secondary	7	12.81
MAN-FM V-8	Primary	7	12.81
VW V-8	Primary	5	9.15
VW V-8	Secondary	5	9.15
CVCC V-8	Primary	5	9.15
CVCC V-8	Secondary	5	9.15
DIESEL V-8	Primary	7	12.81

This subject is an important aspect of HC emissions and it has been demonstrated that HC reactivity from the conventional gasoline engine is 10 times higher than from the diesel. Thus it was assumed that all the power plants with gasoline engine characteristics, i.e. VW, CVCC and the two conventional engines should be awarded 5 points as acceptable and the remainder having diesel combustion characteristics to some degree should merit an award of 7 points.

9. Evaporative Emissions (Weighting 1.60)

Engine	Emission Target	Score	Rating
V-8 Gasoline	Primary	5.0	8.00
IL-6 Gasoline	Primary	5.5	8.80
PROCO V-8	Primary	5.5	8.80
PROCO IL-6	Primary	5.5	8.80
PROCO V-8	Secondary	5.5	8.80
TCCS V-8	Primary	5.5	8.80
TCCS IL-6 T/C	Primary	5.5	8.80
CURTISS-WRIGHT ROTARY	Primary	5.5	8.80
TCCS V-8 T/C	Secondary	5.5	8.80
MAN-FM V-8	Primary	5.5	8.80
VW V-8	Primary	5.5	8.80
VW V-8	Secondary	5.5	8.80
CVCC V-8	Primary	5.0	8.00
CVCC V-8	Secondary	5.0	8.00
DIESEL V-8	Primary	7.0	11.2

With modern control systems using carbon filter/storage canisters, gasoline is an acceptable and practical fuel, which when considered in relation to the power plants having carburettors warrants them 5 points. The power plants using gasoline injection, i.e. all but the CVCC and V-8 conventional gasoline, were each awarded an extra ½ point as it was considered an injection system could achieve a slightly lower evaporation loss level.

Mid distillates such as used in high speed diesel engines would suffer only marginal evaporative losses and must merit a good rating (Score 7).

10. Miscellaneous Emissions (Weighting 0.98)

Engine	Emission Target	Score	Rating
V-8 GASOLINE	Primary	5	4.9
IL-6 GASOLINE	Primary	5	4.9
PROCO V-8	Primary	5	4.9
PROCO IL-6	Primary	5	4.9
PROCO V-8	Secondary	5	4.9
TCCS V-8	Primary	5	4.9
TCCS IL-6 T/C	Primary	5	4.9
CURTISS-WRIGHT ROTARY	Primary	5	4.9
TCCS V-8 T/C	Secondary	5	4.9
MAN-FM V-8	Primary	5	4.9
VW V-8	Primary	5	4.9
VW V-8	Secondary	5	4.9
CVCC V-8	Primary	5	4.9
CVCC V-8	Secondary	5	4.9
DIESEL V-8	Primary	5	4.9

At the time of writing of the study none of the power plants was regarded as producing major quantities of any pollutants other than those already considered so that all were rated as equal and acceptable.

11. Noise (Drive-by) (Weighting 6.32)

The noise level of a particular engine is largely dependent on the cylinder bore size, the rotational speed and the rate of cylinder pressure rise. A 1590 kg passenger car powered by a conventional V-8 gasoline engine can achieve a drive-by noise level of 71 dB(A) measured at 50 ft. This level was rated good and awarded seven merit points. The table below shows predicted noise levels for a similar vehicle powered by the remaining power plants, assessed in relation to the above parameters together with the merit rating and weighted score.

Engine	Emission Target	Predicted Vehicle Noise dBA	Score	Rating
V-8 GASOLINE	Primary	71	7	44.24
IL-6 GASOLINE	Primary	73	6.5	41.08
PROCO V-8	Primary	71	7	44.24
PROCO IL-6	Primary	75	5	31.60
PROCO V-8	Secondary	72.5	6.5	41.08
TCCS V-8	Primary	70.5	7.5	47.4
TCCS IL-6 T/C	Primary	71	7	44.24
CURTISS-WRIGHT ROTARY	Primary	71	7	44.24
TCCS V-8 T/C	Secondary	72.5	6.5	41.08
MAN-FM V-8	Primary	72	7	44.24
VW V-8	Primary	73	6.5	41.08
VW V-8	Secondary	73	6.5	41.08
CVCC V-8	Primary	73	6.5	41.08
CVCC V-8	Secondary	73	6.5	41.08
DIESEL V-8	Primary	74	5.5	34.76

Changes to engine configuration such as more advanced crank-case design may modify these predictions and the power plants having the most severe noise problem are likely to benefit most from such modification.

12. Package Volume (Weighting 2.61)

Engine	Emission Target	Score	Rating
V-8 GASOLINE	Primary	7	18.27
IL-6 GASOLINE	Primary	7	18.27
PROCO V-8	Primary	7	18.27
PROCO IL-6	Primary	5	13.05
PROCO V-8	Secondary	6	15.66
TCCS V-8	Primary	5	13.05
TCCS IL-6 T/C	Primary	4	10.44
CURTISS-WRIGHT ROTARY	Primary	9	23.49
TCCS V-8 T/C	Secondary	4.5	11.75
MAN-FM V-8	Primary	6	15.66
VW V-8	Primary	7	18.27
VW V-8	Secondary	7	18.27
CVCC V-8	Primary	6	15.66
CVCC V-8	Secondary	4.5	11.75
DIESEL V-8	Primary	5.5	14.36

Box volumes as calculated during the configuration phase of the study are listed below:-

Engine	Emission Target	ft^3	m^3
PROCO V-8	Primary	9.7	.275
PROCO IL-6	Primary	11.9	.337
PROCO V-8	Secondary	10.7	.303
TCCS V-8	Primary	11.9	.337
TCCS IL-6 T/C	Primary	12.2	.346
CURTISS-WRIGHT ROTARY	Primary	8.5	.24
TCCS V-8 T/C	Secondary	12.1	.343
MAN-FM V-8	Primary	10.83	.307
VW V-8	Primary	10.0	.284
VW V-8	Secondary	10.0	.284
CVCC V-8	Primary	11.4	.322
CVCC V-8	Secondary	12.8	.362
DIESEL V-8	Primary	11.3	.320

All are given merit ratings according to their calculated box volumes based on a rating of good for the conventional gasoline engines. Taken into account in the rating was the length of the six cylinder in-line engines as this was believed to be important to safety regulations.

13. Package Weight (Weighting 2.59)

Engine	Emission Target	Score	Rating
V-8 GASOLINE	Primary	6	15.54
IL-6 GASOLINE	Primary	7	18.13
PROCO V-8	Primary	6	15.54
PROCO IL-6	Primary	6	15.54
PROCO V-8	Secondary	6	15.54
TCCS V-8	Primary	5.5	14.25
TCCS IL-6 T/C	Primary	6	15.54
CURTISS-WRIGHT ROTARY	Primary	8	20.72

Engine	Emission Target	Score	Rating
TCCS V-8 T/C	Secondary	5	12.95
MAN-FM V-8	Primary	5	12.95
VW V-8	Primary	6	15.54
VW V-8	Secondary	6	15.54
CVCC V-8	Primary	6	15.54
CVCC V-8	Secondary	5.5	14.25
DIESEL V-8	Primary	4.5	11.66

The following table shows the estimated weight for each of the power plants considered in this study. If the six-cylinder European type gasoline engine is considered to have a rating of good (Score 7) all the remainder, apart from the rotary engine, bear a weight penalty and were thus accorded lower scores.

	lb.	kg.
V-8 GASOLINE	540	245
IL-6 GASOLINE	450	204
PROCO V-8	551	250
PROCO IL-6	580	263
PROCO V-8 Secondary	571	259
TCCS V-8	602	273
TCCS IL-6 T/C	573	260
ROTARY	330	150
TCCS V-8 T/C Secondary	631	286
MAN-FM V-8	662	300
VW V-8	550	250
VW V-8 Secondary	550	250
CVCC V-8	550	250
CVCC V-8 Secondary	602	273
DIESEL	700	320

14. Fuel Economy (Weighting 12.2)

Engine	Emission Target	Score	Rating
V-8 GASOLINE	Primary	6.5	79.3
IL-6 GASOLINE	Primary	7	85.4
PROCO V-8	Primary	7.5	91.5
PROCO IL-6	Primary	7.5	91.5
PROCO V-8	Secondary	6.5	79.3
TCCS V-8	Primary	7.0	85.4
TCCS IL-6 T/C	Primary	7.0	85.4
CURTISS-WRIGHT ROTARY	Primary	5.5	67.1
TCCS V-8 T/C	Secondary	5.5	67.1
MAN-FM V-8	Primary	7.5	91.5
VW V-8	Primary	6.5	79.3
VW V-8	Secondary	6.0	73.2
CVCC V-8	Primary	6.5	79.3
CVCC V-8	Secondary	6.0	73.2
DIESEL V-8	Primary	8.5	103.7

This section was considered the most important and was awarded the highest weighting factor. The definitions of the various fuel consumption ratings were changed from the previous diesel survey to the scale shown below as it was con-

sidered that 25 mpg, rated 9 points in the earlier study, was impossible to achieve, with gasoline as the fuel.

Fuel Economy mpg.	1/100 km	Rating
		0 (totally unacceptable)
5.25	44.81	1
		2 (bad)
8.75	26.89	3
		4 (poor)
13.125	17.92	5 (acceptable)
		6
17.5	13.44	7 (good)
		8
21.87	10.76	9 (best practical)
		10 (perfect)

Predicted fuel economy levels for a 1590 kg passenger car were based on estimated and measured fuel consumptions from each of the power plants. The six cylinder European gasoline engine, with injected fuel, was given a good rating (7 points) and several of the stratified charge systems were rated as good or better. The diesel was considered to be almost 'best practical' and awarded 8½ points. Of course, the diesel engine had an advantage in this respect since the fuel economies are rated on a volumetric basis, and diesel fuel has a higher specific gravity. A full list of the estimated fuel consumption and economy levels obtainable during the CVS-CH test cycle are as follows:-

	1/100 km	mpg
V-8 GASOLINE	14.6	16
IL-6 GASOLINE	13.5	17.4
PROCO V-8	12.5	18.7
PROCO IL-6	12.75	18.4
PROCO V-8 Secondary	14.2	16.5
TCCS V-8	13.8	17.0
TCCS IL-6 T/C	13.8	17.0
ROTARY	16.75	14.0
TCCS V-8 T/C Secondary	16.75	14.0
MAN-FM V-8	12.3	19.0
VW V-8	14.2	16.5
VW V-8 Secondary	15.13	15.5
CVCC V-8	13.95	16.8
CVCC V-8 Secondary	15.6	15.0
DIESEL V-8	11.0	21.0

15. Fuel Cost (Weighting 5.40)

Engine	Emission Target	Score	Rating
V-8 GASOLINE	Primary	5	27.0
IL-6 GASOLINE	Primary	5	27.0
PROCO V-8	Primary	5	27.0
PROCO IL-6	Primary	5	27.0
PROCO V-8	Secondary	5	27.0
TCCS V-8	Primary	5	27.0
TCCS IL-6 T/C	Primary	5	27.0

Engine	Emission Target	Score	Rating
CURTISS-WRIGHT ROTARY	Primary	5	27.0
TCCS V-8 T/C	Secondary	5	27.0
MAN-FM V-8	Primary	5	27.0
VW V-8	Primary	5	27.0
VW V-8	Secondary	5	27.0
CVCC V-8	Primary	5	27.0
CVCC V-8	Secondary	5	27.0
DIESEL V-8	Primary	6	32.4

In spite of the trend towards higher fuel costs it was assumed that the situation for all the power plants employing gasoline as fuel must rate as acceptable. All these engines were required to run on lead free fuel to preserve catalyst life, with the exception of the CVCC engine which, having thermal reactors, could tolerate leaded fuel. This factor however, was not considered to constitute a measurable advantage to the CVCC power plants. The diesel engine was awarded 1 extra point (Score 6) as the light distillate fuel (DF 1) has a currently lower price at the pump although this may always be subject to artificial manipulation by taxation.

16. Vehicle First Cost(Weighting 4.65)

Engine	Emission Target	Score	Rating
V-8 GASOLINE	Primary	6	27.9
IL-6 GASOLINE	Primary	6	27.9
PROCO V-8	Primary	4.5	20.93
PROCO IL-6	Primary	5.5	25.57
PROCO V-8	Secondary	4.0	18.6
TCCS V-8	Primary	4.0	18.6
TCCS IL-6 T/C	Primary	4.0	18.6
CURTISS-WRIGHT ROTARY	Primary	5.0	23.25
TCCS V-8 T/C	Secondary	2.5	11.63
MAN-FM V-8	Primary	4.5	20.93
VW V-8	Primary	3.5	16.28
VW V-8	Secondary	3.0	13.95
CVCC V-8	Primary	6.0	27.90
CVCC V-8	Secondary	5.0	23.25
DIESEL V-8	Primary	5.0	23.25

It is estimated that for a conventional V-8 powered passenger car the power plant is responsible for 25% of the total vehicle cost and the first cost of such a vehicle was rated as better than acceptable (Score 6). For this aspect the manufacturing cost of each power plant was estimated and rated accordingly. The following table shows the cost estimates for each engine and it can be seen that apart from the primary target of the CVCC all the power plants incur a cost penalty in relation to the conventional gasoline engines; the TCCS secondary engine and the two VW engines being between 40 and 65% more expensive.

	Manufacturing Cost
V-8 GASOLINE	$ 595
IL-6 GASOLINE	598
PROCO V-8	741
PROCO IL-6	664

	Manufacturing Cost
PROCO V-8 Secondary	$ 827
TCCS V-8	811
TCCS IL-6 T/C	827
ROTARY	667
TCCS V-8 T/C Secondary	985
MAN-FM V-8	756
VW V-8	844 *
VW V-8 Secondary	899 *
CVCC V-8	600
CVCC V-8 Secondary	670
DIESEL V-8	701

* Deduct approx. $ 80 for electronic fuel injection.

The merit rating for costs was based on the following:-

Cost $	Score	
	0	
	1	
1000	2	(bad)
900	3	
800	4	(poor)
700	5	(acceptable)
600	6	
500	7	(good)
400	8	
	9	
	10	

17. Maintenance Cost(Weighting 4.35)

Engine	Emission Target	Score	Rating
V-8 GASOLINE	Primary	5	21.75
IL-6 GASOLINE	Primary	5	21.75
PROCO V-8	Primary	4.5	19.57
PROCO IL-6	Primary	4.5	19.57
PROCO V-8	Secondary	3.0	13.05
TCCS V-8	Primary	3.0	13.05
TCCS IL-6 T/C	Primary	3.0	13.05
CURTISS-WRIGHT ROTARY	Primary	2.5	10.88
TCCS V-8 T/C	Secondary	3.0	13.05
MAN-FM V-8	Primary	4.0	17.40
VW V-8	Primary	4.0	17.40
VW V-8	Secondary	3.0	13.05
CVCC V-8	Primary	6.0	26.10
CVCC V-8	Secondary	5.5	23.93
DIESEL V-8	Primary	6.0	26.10

Maintenance costs for conventional gasoline engines are regarded as satisfactory and experience suggests that the diesel should be better and was rated one point higher (Score 6). The remaining stratified charge engines were rated less than acceptable mainly because of the high cost of catalytic exhaust systems, the

exceptions being the CVCC engines which were rated as better than the conventional gasoline.

The rotary engine was rated particularly lowly (2.5 points) because apart from catalysts it was considered the engine may require more than average mechanical attention.

18. Startability(Weighting 4.85)

Engine	Emission Target	Score	Rating
V-8 GASOLINE	Primary	7	33.95
IL-6 GASOLINE	Primary	7	33.95
PROCO V-8	Primary	7	33.95
PROCO IL-6	Primary	7	33.95
PROCO V-8	Secondary	7	33.95
TCCS V-8	Primary	8	38.80
TCCS IL-6 T/C	Primary	8	38.80
CURTISS-WRIGHT ROTARY	Primary	5	24.25
TCCS V-8 T/C	Secondary	8	38.80
MAN-FM V-8	Primary	7	33.95
VW V-8	Primary	6	29.10
VW V-8	Secondary	6	29.10
CVCC V-8	Primary	6.5	31.53
CVCC V-8	Secondary	6.5	31.53
DIESEL V-8	Primary	5	24.25

With the ability to start instantaneously under most environmental conditions experienced in America the conventional gasoline engines should merit a very high rating but the hot starting of low emissions vehicles can be poor, and is not likely to improve substantially beyond today's levels. However both versions of the conventional engines were rated good and awarded seven points. At the other end of the range the diesel was rated only as acceptable, largely due to the delay in cold starting due to the heater plug lead time required, and the rotary engine, known to be a sometimes doubtful starter, was also rated acceptable. VW and CVCC engines were rated just below the conventional engines and the TCCS engines were rated very good (Score 8).

19. Hot Driveability(Weighting 4.48)

Engine	Emission Target	Score	Rating
V-8 GASOLINE	Primary	8	35.84
IL-6 GASOLINE	Primary	8	35.84
PROCO V-8	Primary	8	35.84
PROCO IL-6	Primary	8	35.84
PROCO V-8	Secondary	8	35.84
TCCS V-8	Primary	8	35.84
TCCS IL-6 T/C	Primary	7	31.36
CURTISS-WRIGHT ROTARY	Primary	7	31.36
TCCS V-8 T/C	Secondary	7	31.36
MAN-FM V-8	Primary	8	35.84
VW V-8	Primary	8	35.84
VW V-8	Secondary	8	35.84
CVCC V-8	Primary	7	31.36
CVCC V-8	Secondary	5	22.40
DIESEL V-8	Primary	7	31.36

Hot driveability of the conventional gasoline engines was rated at 8 points; better than good, almost best practical, and all but one of the remaining power plants was rated as good or better. The exception was the CVCC secondary emissions target engine which, because of a high degree of EGR required, was considered to be just acceptable (Score 5).

20. Cold Driveability (Weighting 3.52)

Engine	Emission Target	Score	Rating
V-8 GASOLINE	Primary	4	14.08
IL-6 GASOLINE	Primary	6	21.12
PROCO V-8	Primary	7	24.64
PROCO IL-6	Primary	7	24.64
PROCO V-8	Secondary	7	24.64
TCCS V-8	Primary	7	24.64
TCCS IL-6 T/C	Primary	6	21.12
CURTISS-WRIGHT ROTARY	Primary	6	21.12
TCCS V-8 T/C	Secondary	6	21.12
MAN-FM V-8	Primary	7	24.64
VW V-8	Primary	7	24.64
VW V-8	Secondary	7	24.64
CVCC V-8	Primary	4	14.08
CVCC V-8	Secondary	4	14.08
DIESEL V-8	Primary	7	24.64

With flat spots due to carburation problems at cold temperatures the V-8 conventional gasoline engine was regarded as poor (4 points). With gasoline injection the remaining power plants were rated up to good (scoring 6 or 7) with a rating of good for the diesel engine. The two CVCC candidates, being carburetted, were rated as poor for the same reasons as the conventional gasoline engine.

21. Torque Back-up (Weighting 1.98)

Engine	Emission Target	Score	Rating
V-8 GASOLINE	Primary	7	13.86
IL-6 GASOLINE	Primary	6.5	12.87
PROCO V-8	Primary	6.5	12.87
PROCO IL-6	Primary	7	13.86
PROCO V-8	Secondary	5	9.90
TCCS V-8	Primary	7	13.86
TCCS IL-6 T/C	Primary	5.5	10.89
CURTISS-WRIGHT ROTARY	Primary	6	11.88
TCCS V-8 T/C	Secondary	6.5	12.87
MAN-FM V-8	Primary	7	13.86
VW V-8	Primary	4	7.92
VW V-8	Secondary	4	7.92
CVCC V-8	Primary	7	13.86
CVCC V-8	Secondary	6.5	12.87
DIESEL V-8	Primary	7	13.86

All the power plants varied in the amount of torque back-up available. Those considered good (7 points) having 25% torque back-up, were the V-8 conventional gasoline engine, the PROCO IL-6, TCCS and CVCC primary V-8 engines, the MAN-FM and the diesel engine. Marginally inferior were the IL-6 gasoline, PROCO V-8 primary;

TCCS and CVCC secondary engines each having about 20% torque back-up (Score 6.5). The remainder were satisfactory or better with the exception of the VW engines which have a curious torque curve with less than 10% back-up and were consequently rated poor with a score of 4.

22. Durability (Weighting 4.80)

Engine	Emission Target	Score	Rating
V-8 GASOLINE	Primary	5	24.0
IL-6 GASOLINE	Primary	5	24.0
PROCO V-8	Primary	4.5	21.60
PROCO IL-6	Primary	4.5	21.60
PROCO V-8	Secondary	3	14.40
TCCS V-8	Primary	3	14.40
TCCS IL-6 T/C	Primary	3	14.40
CURTISS-WRIGHT ROTARY	Primary	2.5	12.00
TCCS V-8 T/C	Secondary	2.5	12.00
MAN-FM V-8	Primary	4.5	21.60
VW V-8	Primary	4	19.20
VW V-8	Secondary	3	14.40
CVCC V-8	Primary	7	33.60
CVCC V-8	Secondary	6.5	31.20
DIESEL V-8	Primary	7	33.60

Apart from reservations concerning the Rotary engine it was considered that all the power plants could achieve 100,000 miles mechanically without difficulty. However, the limitation was expected to be in the catalytic exhaust systems. Although attempts to improve catalyst life have so far not been particularly successful the durability of the conventional gasoline engines was considered to be acceptable. On this basis the remaining engines were judged with the diesel and CVCC power plants achieving the highest rating as no catalysts are involved. The remaining power plants all received lower than acceptable ratings, according to the severity of the demand on the catalysts. The TCCS secondary emissions engine and the Rotary engine only rated a score of 2.5 points due to mechanical as well as other doubts.

23. Heat Loss (Weighting 2.18)

Engine	Emission Target	Score	Rating
V-8 GASOLINE	Primary	7	15.26
IL-6 GASOLINE	Primary	7	15.26
PROCO V-8	Primary	7	15.26
PROCO IL-6	Primary	7	15.26
PROCO V-8	Secondary	7	15.26
TCCS V-8	Primary	5	10.90
TCCS IL-6 T/C	Primary	5	10.90
CURTISS-WRIGHT ROTARY	Primary	6	13.08
TCCS V-8 T/C	Secondary	7	15.26
MAN-FM V-8	Primary	5	10.90
VW V-8	Primary	7	15.26
VW V-8	Secondary	7	15.26
CVCC V-8	Primary	6	13.08
CVCC V-8	Secondary	6	13.08
DIESEL V-8	Primary	5	10.90

For this aspect, the vehicle configuration for the various power plants was assumed to contain an adequate cooling system allowing for the increased coolant heat losses for some of the engines at full load. It is know, for instance, that the diesel engine may reject 25% more heat to the radiator than the equivalent gasoline engine and that some of the stratified charge engines will also have a higher full load heat rejection than conventional gasoline engines. The rating in this section, therefore, was mainly concerned with light load and idle heat rejection to enable the vehicle interior heating to be accomplished satisfactorily.

In this respect all the power plants were awarded 'good' ratings except for the diesel, the two primary TCCS engine and the MAN-FM engine, all known to have low heat losses at idle. These latter engines were however considered satisfactory and awarded 5 points.

24. Fire Risk (Weighting 3.55)

Engine	Emission Target	Score	Rating
V-8 GASOLINE	Primary	5	17.75
IL-6 GASOLINE	Primary	5	17.75
PROCO V-8	Primary	5	17.75
PROCO IL-6	Primary	5	17.75
PROCO V-8	Secondary	5	17.75
TCCS V-8	Primary	5	17.75
TCCS IL-6 T/C	Primary	5	17.75
CURTISS-WRIGHT ROTARY	Primary	5	17.75
TCCS V-8 T/C	Secondary	5	17.75
MAN-FM V-8	Primary	5	17.75
VW V-8	Primary	5	17.75
VW V-8	Secondary	5	17.75
CVCC V-8	Primary	4.5	15.98
CVCC V-8	Secondary	4.5	15.98
DIESEL V-8	Primary	6	21.30

Apart from the diesel engine all the power plants considered in this survey use gasoline fuel which, due to its high volatility, can contribute to fire risk. It was assumed for the purposes of this rating system that most of these gasoline powered vehicles would rate as acceptable. However, the CVCC engines, with their high heat capacity thermal reactors might contribute a marginally higher risk and were therefore down-graded ½ a point to 4.5. The diesel engine was given one more point (Score 6) as the relatively low volatility of the fuel was considered to contain a lower degree of risk.

25. Idling Noise (Weighting 3.83)

Engine	Emission Target	Score	Rating
V-8 GASOLINE	Primary	8	30.64
IL-6 GASOLINE	Primary	8	30.64
PROCO V-8	Primary	5.5	21.07
PROCO IL-6	Primary	5	19.15
PROCO V-8	Secondary	5	19.15
TCCS V-8	Primary	5	19.15
TCCS IL-6 T/C	Primary	5	19.15
CURTISS-WRIGHT ROTARY	Primary	7	26.81
TCCS V-8 T/C	Secondary	4.5	17.24

Engine	Emission Target	Score	Rating
MAN-FM V-8	Primary	5	19.15
VW V-8	Primary	6	22.98
VW V-8	Secondary	6	22.98
CVCC V-8	Primary	8	30.64
CVCC V-8	Secondary	8	30.64
DIESEL V-8	Primary	4	15.32

Idle noise of the conventional gasoline engine is low in terms of both objectionability and overall noise level and must approach the best practical level that a power plant can achieve. The CVCC engine, having similar combustion characteristics at idle, must also rate highly. All score 8 points. At the other end of the scale, the diesel, although not excessively high in noise level, produces a harsh unpleasant sound and was rated 'poor' at 4 points.

The stratified charge engines employing direct injection (PROCO, TCCS and MAN-FM) were all rated more or less acceptable. Although the combustion characteristics were considered similar to the diesel a combination of lower pressures and smoother cylinder pressure diagrams generally allowed ½ to 1½ points higher rating.

Of the remaining power plants the rotary was considered good (Score 7) and the VW engines less than good (6 points).

26. Vibration and Torque Recoil (Weighting 2.18)

Engine	Emission Target	Score	Rating
V-8 GASOLINE	Primary	8	17.44
IL-6 GASOLINE	Primary	7.5	16.35
PROCO V-8	Primary	6.5	14.17
PROCO IL-6	Primary	6	13.08
PROCO V-8	Secondary	6.5	14.17
TCCS V-8	Primary	6	13.08
TCCS IL-6 T/C	Primary	5.5	11.99
CURTISS-WRIGHT ROTARY	Primary	7.5	16.35
TCCS V-8 T/C	Secondary	6	13.08
MAN-FM V-8	Primary	5	10.9
VW V-8	Primary	8	17.44
VW V-8	Secondary	8	17.44
CVCC V-8	Primary	8	17.44
CVCC V-8	Secondary	8	17.44
DIESEL V-8	Primary	6	13.08

The aspect of vibration and torque recoil is undoubtedly a major contributor to the feel or refinement of a vehicle.

A V-8 power plant having similar combustion characteristics to a conventional gasoline engine should be quiet enough as to make the user unaware of any reciprocating motion. In this respect it was considered that the VW and CVCC power plants were equal to the conventional V-8 gasoline engine and rated at 8 points being almost the best practical. Only marginally inferior (Score 7.5) were the IL-6 gasoline and Rotary engines.

The direct injection engines, including the diesel, were all rated lower,

but better than acceptable, due to running unthrottled and having slightly rougher torque characteristics.

	V-8 Gasoline	IL-6 Gasoline	PROCO V-8 Primary	PROCO IL-6 Primary	PROCO V-8 Secondary	TCCS V-8 Primary	TCCS IL-6 T/C Primary	Curtiss-Wright Primary	TCCS V-8 T/C Secondary	MAN-FM Primary	VW V-8 Primary	VW V-8 Secondary	CVCC V-8 Primary	CVCC V-8 Secondary	Diesel V-8 Primary
1. Smoke	9	9	8.5	8.5	8.5	6	5.5	6	5.5	6	8.5	8.5	9	9	6
2. Particulates	7	7	6.5	6.5	6.5	3	3	3	3	3	7	7	7	7	2
3. Odour	6	6	6	6	6	4.5	4.5	4	4.5	3	5	5	6	6	4
4. NO	5	5	5	5	5	6	6	7	5	7	7	5	5	5	5
5. HC	5	5	5	5	5	5	5	5	5	5	5	5	5	5	5
6. CO	5	5	5	5	5	5	5	5	5	5	5	5	5	5	6
7. SO	5	5	5	5	5	5	5	5	5	5	5	5	5	5	2
8. HC Reactivity	5	5	7	7	7	7	7	7	7	7	5	5	5	5	7
9. Evap. Emissions	5	5.5	5.5	5.5	5.5	5.5	5.5	5.5	5.5	5.5	5.5	5.5	5	5	7
10. Misc. Emissions	5	5	5	5	5	5	5	5	5	5	5	5	5	5	5
11. Noise (Drive-by)	7	6.5	7	5	6.5	7.5	7	7	6.5	7	6.5	6.5	6.5	6.5	5.5
12. Package Volume	7	7	7	5	6	5	4	9	4.5	6	7	7	6	4.5	5.5
13. Package Weight	6	7	6	6	6	5.5	6	8	5	5	6	6	6	5.5	4.5
14. Fuel Economy	6.5	7	7.5	6.5	7	7	5.5	5.5	7.5	6.5	6	6.5	6	8.5	
15. Fuel Cost	5	5	5	5	5	5	5	5	5	5	5	5	5	5	6
16. Vehicle First Cost	6	6	4.5	5.5	4	4	4	5	2.5	4.5	3.5	3	6	5	5
17. Maintenance Cost	5	5	4.5	4.5	3	3	3	2.5	3	4	4	3	6	5.5	6
18. Startability	7	7	7	7	7	8	8	5	8	7	6	6	6.5	6.5	5
19. Hot Driveability	8	8	8	8	8	8	7	7	7	8	8	8	7	5	7
20. Cold Driveability	4	6	7	7	7	7	6	6	6	7	7	7	4	4	7
21. Torque Back-up	7	6.5	6.5	7	5	7	5.5	6	6.5	7	4	4	7	6.5	7
22. Durability	5	5	4.5	4.5	3	3	3	2.5	2.5	4.5	4	3	7	6.5	7
23. Heat Loss	7	7	7	7	7	5	5	6	7	5	7	7	6	6	5
24. Fire Risk	5	5	5	5	5	5	5	5	5	5	5	5	4.5	4.5	6
25. Idling Noise	8	8	5.5	5	5	5	5	7	4.5	5	6	6	8	8	4
26. Torque Recoil	8	7.5	6.5	6	6.5	6	5.5	7.5	6	5	8	8	8	8	6

FINAL RATINGS FOR EACH ASPECT

RESULTS

The product of the rating and the weighting for each performance aspect was summed for each power plant and the results are shown in the table below:-

Engine	Final Score (to nearest whole number)	Primary Target Position	Secondary Target Position
V-8 GASOLINE	616	2	
IL-6 GASOLINE	627	1	
PROCO V-8	615	3	
PROCO IL-6	599	5	
PROCO V-8	576		2
TCCS V-8	566	9	
TCCS IL-6 T/C	547	11	
CURTISS-WRIGHT ROTARY	552	10	
TCCS V-8 T/C	517		4
MAN-FM V-8	574	8	
VW V-8	586	6	
VW V-8	561		3
CVCC V-8	613	4	
CVCC V-8	583		1
DIESEL V-8	581	7 *	

* Not strictly comparable due to different fuel.

These results are revealing in that they indicate how small the relative differences are between the power plants. With the rating methodology employed a power plant rated as acceptable in each of the performance aspects would achieve a score of 500 but if a zero were to occur in any score, that power plant must be rejected whatever its final total. As none of the candidates rate zero in any of the performance aspects and all achieved a total score in excess of 500, all must be considered as viable alternatives.

The highest scoring power plant, the conventional European type IL-6 gasoline engine scored approximately 20% more points than the lowest, the TCCS secondary emissions engine. Of particular interest is the score attained by the PROCO primary emissions engine which attained a similar rating to the conventional V-8 gasoline engine. With a slightly lower total score than the PROCO V-8 engine, came the CVCC primary engine followed by the PROCO IL-6. The position of the IDI diesel in the table is not directly comparable with the other power plants since the fuel is different from the other power plants, but was included in the rating, so that a comparison could be made with the previous diesel survey.

Of the candidates for the secondary emissions target (0.4 g/mile NO_x) the CVCC and PROCO engines were awarded greatest merit. However, by the definition of this methodology, none of the other combustion systems could be completely ruled out.

CONCLUSIONS

The rating methodology evolved has allowed the different power plants to be compared on a numerical basis. Its application to the fifteen candidate power plants selected for appraisal has resulted in them all being proved viable for the proposed 3500 lb vehicle to some degree.

The most suitable engines, those with the highest total score, were the conventional gasoline engines and the PROCO V-8 primary emissions stratified charge engine, which came second to the IL-6 gasoline engine.

For the secondary emissions target the CVCC secondary engine achieved the highest score followed by the PROCO secondary engine.

A STUDY OF STRATIFIED CHARGE FOR LIGHT DUTY POWER PLANTS

SECTION J

DISCUSSION, CONCLUSIONS AND RECOMMENDATIONS FOR FUTURE WORK

DISCUSSIONS AND RECOMMENDATIONS

GENERAL DISCUSSION

The unthrottled stratified charge engine has been sought throughout this century as the epitome for fuel economy. The advent of exhaust emission legislation increased the fervour of the search and, indeed, improvements in economy with unthrottled engines have been demonstrated. Conversely, the exhaust emission legislation has also condemned the unthrottled stratified charge engine, due to its inherent characteristics of emitting high HC emissions in spite of the low CO and NO emissions. This survey has indicated that the hydrocarbon emissions at low loads cannot be avoided, due to the quenching of some of the air and fuel mixture by the cylinder walls and the low gas temperatures during combustion. A catalyst is needed to remove the emissions in the exhaust system, but even here there are problems. Since the exhaust temperature is low, the catalyst efficiency is lower than in a conventional gasoline engine.

The only practical approach to reducing HC emissions from stratified charge engines is to throttle the induced air, so that the mixture in the cylinder has an air fuel ratio of around 17 to 20. In this region, in-cylinder formation of HC emissions is reduced to a minimum, exhaust temperatures are relatively high, and there is sufficient oxygen in the exhaust gas so that further oxidation of the HC can be completed in the exhaust system. This approach has been followed in Ford PROCO, Honda CVCC, VW and Porsche engines. The only exception among the principal stratified charge developments has been Texaco TCCS and MAN-FM, where unthrottled operation has been maintained under most conditions. The TCCS engines have high HC emissions and the high degree of exhaust treatment which is required to meet emission targets is a direct result of this decision. HC emissions of the MAN-FM are good, but this engine has not reached the stage of an automotive application.

The direct injection stratified charge engines such as PROCO, TCCS and MAN-FM appear to have the greatest potential for low fuel consumption. The higher gas velocities which occur during the combustion in divided chamber engines (CVCC, VW, Porsche, etc.) lead to higher heat transfer and some loss in fuel economy. The need to throttle most of the engines for HC control has also involved an economy sacrifice. The end result is that the fuel economy advantage of the best D.I. engine (i.e. PROCO) over the good gasoline engines is relatively small. The TCCS engines do not emerge as the best in fuel economy due to various trade-offs in meeting the HC standard. Exhaust gas recirculation is used, partially to reduce NO and partially to increase exhaust temperatures and aid in HC control. The divided chamber engines have fuel economies similar, or slightly worse than the best conventional gasoline engines. Category IV engines (e.g. VW and Porsche) are at a relatively early stage of development, and some small increase in economy may still be possible. However, category V engines (e.g. Honda CVCC) are unlikely to improve on the economy of good gasoline engines if thermal reactors are used to control HC and CO. It is important to realise that the energy in the fuel can only be used once, either as output work due to better fuel economy, or else as exhaust energy to help control HC and CO emissions, BUT NOT BOTH. If a stratified charge engine emerges in the future, which can give better economy than a good gasoline engine, then it will almost certainly not use a thermal reactor for exhaust control, and a catalyst is the only alternative. This is disappointing, as the durability of thermal reactors is better than that of catalysts, and likely to remain so.

The question must inevitably be raised: Can any stratified charge engine meet 0.41 g/mile HC without catalytic reactors, while improving on the economy of the existing good gasoline engines? The answer which emerges from this survey is : No, and there does not appear to be any likelihood of such an engine emerging if it is

based on an a spark ignition combustion process. As compression ratio increases, and moves towards compression ignition, the HC problem does reduce to some extent, but the level of 0.41 g/mile HC is still unattainable. The good results from MAN-FM in this respect are probably related to the higher CR compared to all the other engines surveyed.

The nitrogen oxide emissions of stratified charge engines are universally lower than for conventional gasoline engines. The divided chamber engines in categories IV and V can often achieve the primary targets (i.e. 1.5 g/mile) without EGR. The direct injection engines have varied performance in this respect, TCCS and MAN-FM having low NO_x, but PROCO being substantially higher. The particularly attractive feature of stratified charge engines is their ability to meet the secondary emission target of 0.4 g/mile NO_x. PROCO, TCCS and Honda CVCC have all demonstrated this ability in a vehicle, but the quantities of EGR required have involved considerable losses in performance and driveability, and in the case of TCCS and CVCC, an additional large economy sacrifice. The PROCO, due to its inherent fast burning, has only a small loss in economy at the secondary target. Perhaps the most significant conclusion to emerge from this survey is the practical and theoretical advantages of Category IV engines (e.g. VW and Porsch) at low NO_x levels. VW and Porsche have both demonstrated NO_x levels below 1 gm/mile without EGR. The secondary targets could probably be achieved with lower penalties in performance and driveability than engines in other categories. At the moment, the greatest problem of the VW and Porsche engines is mechanical complexity, due to the requirement for two injection systems, one for port injection and the other for pre-chamber injection. However, this survey has revealed certain alternatives which, with development, might reduce the injection system cost, such as the Schlamann rubber pump and the Bonner pumpless injector. Meeting the secondary emission targets will almost certainly lead to further reliance on catalysts to remove HC and CO.

Some of the stratified charge engines reviewed bear similar characteristics to the diesel, particularly those in categories II and III (TCCS and MAN-FM) and some in category IV. The full load performance of these engines is limited by the onset of smoke, and the difference with the diesel engine is principally in the ability to operate on gasoline as a fuel. Particulate emissions from these engines are higher than the conventional gasoline engines.

Some types of stratified charge engines have high noise levels, but this problem may occur in different regions of the power spectrum. If the charge stratification is arranged by air motion, i.e. by directed ports such as PROCO, or medium sized swirl chambers, then full load noise is usually relatively high. The air motion causes higher turbulence levels than in the gasoline engine, and the mixture burns at an excessive speed. The TCCS and MAN-FM engines are an exception to this rule, as the combustion rate is controlled, either directly or indirectly by the rate of fuel injection. Engines with small pre-chambers (around 10%) such as Porsche and Honda have lower full load noise levels, as the gas velocities and turbulence at the beginning of combustion are little greater than in the conventional gasoline engine. While the unthrottled engines such as MAN-FM and TCCS have low noise levels at full load, idling noise is usually higher than the gasoline engine. This may mean that idling noise is controlled mainly by maximum cylinder pressure rather than rate of pressure rise. Typical maximum cylinder pressures would be 20 bar for an unthrottled engine and only 7 bar for an engine throttled to an air fuel ratio of 15. Noise from injection equipment may also be significant during idling.

Alternative Engines

Two-stroke stratified charge engines have been studied under Category VII, and though some have made distinct improvements in emissions with respect to the conventional 2 stroke, they still do not equal their 4 stroke counterparts. Many of these studies have centred on the piston ported engine, where the control of the air movement is difficult. A more promising arrangement is one similar to Heintz using uniflow 2 stroke, with a poppet valve as one port, and the piston controlling the ports in the liner, as the other. Arranging charge stratification within this type of engine is less difficult, although the basic problem of high HC, associated with stratified charge engines is still not solved. In addition, the mechanical complexity of the engine is increased. The only advantage compared to a 4 stroke engine is a reduction in overall engine size.

The two piston Kushul engine is an interesting development, and the reported fuel consumption results are exceptionally good. This area might warrant further study.

In view of the fundamental problem of HC emissions with stratified charge engines, uncovered by this survey, some alternative to stratified charge should be sought. The source of the HC formation is linked with spark ignition of the mixture in the cylinder. The flame initiated at the plug is easily doused by very lean mixtures, leaving the unburnt fuels to be released as HC. Therefore combustion which is controlled by a flame front must be avoided. The only two recognised methods of causing combustion in engines are by a compression or spark ignition, and the problem associated with compression ignition are well known. The clear indication from this survey is that other methods of causing combustion in engines should be studied. The most obvious alternative would be to catalyse the air fuel mixture. If the mixture were passed through a catalyst during combustion, then HC emissions would be completely removed. At the end of the compression stroke the gas pressure and temperature are more favourable for oxidation than in an exhaust system. Furthermore, stratification would not be required as a homogeneous lean mixture of any mixture strength could be oxidised. The engine load could be simply regulated by the amount of fuel admitted to the engine. A possible arrangement for catalysed combustion is shown in Fig. D1. The induced air has an imparted swirl of 2 times engine speed. This swirl level is accelerated into the piston cup at tdc. The top of the cup is enclosed by a catalysed wire mesh with a further surface bisecting the cup. At tdc, fuel is injected through a two hole nozzle into the swirling air below the wire mesh, and is then swept through the bisecting mesh and burnt. During the expansion and exhaust strokes the burnt mixture coming from the cup into the remainder of the cylinder must pass through the mesh on the top of the piston. Therefore HC emissions are controlled. The mesh might also need to be pre-heated before starting the engine. This idea has not received a detailed feasibility study, and is simply included here in an attempt to promote ideas for alternatives to spark ignition.

Other Results of Survey

Some general comments can be made regarding the review of mathematical models in each category. While the number of models was large, the actual experimental data on which the models were based was extremely limited. The most critical area in this respect was heat transfer to the cylinder walls. This has a fundamental effect on fuel consumption, performance and NO_x emissions. Many of the models completely ignored heat transfer, while others used the empirical relations established by Woschni, Annand and Eichelberg on diesel and gasoline engines. It is very doubtful if these relations can be applied, in view of the different gas

densities, compositions, and velocities in stratified charge engines. It is suggested that further combustion photography work and instantaneous heat transfer experiments should be conducted so that reliable empirical results can be established and so justify the complexity of the computer simulations which are already developed. Droplet formation and evaporation from injectors is another area where experimental data is missing.

Discussion on Application to Motorcycles

Existing two stroke motorcycle engines will experience great difficulty in achieving the target emission levels. At present many four stroke engines are also outside the target, although this is the result of over-enrichment of the carburettor, to give good performance and driveability. If a small loss in acceleration is accepted, the carburettor mixture strength of the motorcycle engine can be set leaner, and the emission targets can be achieved with ease. Ricardo tests have shown that this approach can also increase fuel economy by up to 50%. Therefore, it is not practical to consider stratified charge versions of motorcycle engines at these emission targets, since the extra mechanical complexity is not justified. The four stroke motorcycle engine must work through the same evolutionary process as that of the car engine in the period of the later 1960's and early 1970's, i.e. better manufacturing tolerances on carburettor settings and ignition timings, resulting in engine operation at higher air/fuel ratios. Eventually, as motorcycle emission levels become more severe, stratified charge engines must be considered. The only practical arrangements would be the Honda CVCC process for cylinder sizes greater than 200 cc and the Kushul process for the flat four arrangement (probably above 750 cc).

Results of Rating Methodology

The stratified charge combustion systems which were considered to be viable power plants were configured, and the various aspects of the performance were estimated. Finally, the engines were rated by a scoring technique based on all aspects of the engine and vehicle performance. The results are shown below:-

Engine		Points	Position	
			Primary	Secondary
GASOLINE V-8		616	2	
GASOLINE IL-6		627	1	
PROCO V-8	Primary target	615	3	
PROCO IL-6	Primary target	599	5	
PROCO V-8	Secondary target	576		2
TCCS V-8	Primary target	566	9	
TCCS IL-6	Primary target	547	10	
TCCS V-8	Secondary target	552		4
CURTISS-WRIGHT	Primary target	517	11	
MAN-FM V-8	Primary target	574	8	
VW V-8	Primary target	586	6	
VW V-8	Secondary target	561		3
CVCC V-8	Primary target	613	4	
CVCC V-8	Secondary target	583		1
DIESEL	Primary target	581	7	

The results from the first 4 engines were very close, and raised many questions, particularly with regard to the weighting of each aspect of vehicle performance.

Any alterations of the weighting can significantly affect the overall result. A number of comments are listed below.

1. Each of the components of the legislated exhaust emissions (i.e. HC, CO, NO_x) were marked either 5 or 6 (i.e. acceptable) as the configurated engine was estimated to meet the target at low mileage. In addition, the weighting of each of the exhaust emission components was 3.99, 3.61, 3.92 respectively. However, the durability of the emission control equipment and the engine was only given a total weighting of 4.80. Since the durability of catalysts is the critical factor in many of the configurated engines, an increase in the weighting of this aspect would significantly improve the position of the CVCC engines.

2. The engines configured are at various stages of development. The complex mechanical fuel injection equipment of the VW engine might be considerably simplified in the future.

3. The weighting figures generally display a concern with environmental issues such as exhaust emissions and energy utilisation, with a relatively lower weighting on vehicle first cost. Automotive manufacturers would probably consider vehicle first cost to be of critical importance.

4. Market penetration and amortization of production plant costs have not been considered in the engine cost analysis. Such an approach would probably give the conventional gasoline engine an advantage over alternatives.

GENERAL CONCLUSIONS

1. This survey has revealed a basic limitation of unthrottled stratified charge engines, in that hydrocarbon emission levels are always very high. These levels can be reduced by throttling the engine, but they are usually still greater than the conventional gasoline engine. There are two primary methods for HC control. Fuel economy can be sacrificed to increase the exhaust temperature and aid HC oxidation in the exhaust. Alternatively, reliance can be placed on catalytic reactors, although even here there will be some economy penalty.

2. A new method of engine combustion is needed, besides spark or compression ignition, which will be satisfactory in oxidising lean air fuel mixtures, and will avoid the formation of unburnt hydrocarbons.

3. Carbon monoxide emissions from stratified charge engines are universally low, although in CVS tests they are usually above the primary target of 3.4 g/mile.

4. NO emissions vary, depending on the stratification.

   (NO emissions at an air fuel ratio of 16)

Rating of Categories

	Example	
Homogeneous charge gasoline engine		Highest
Category 6	IFP	↓
Category 1	PROCO	↓
Category 2 and 3	TCCS	↓
Category 5	CVCC	↓
Category 4	VW	Lowest

Exhaust diluent engines may give even lower levels of NO, but at the expense of economy.,

5. The best possible fuel economy from a reciprocating i.c. engine is attained by completely unthrottled operation and control of engine power by fuel flow alone. None of the engines reviewed has reached the fuel economy levels which are theoretically attainable, due to high heat transfer losses caused by charge agitation and movement during combustion, and matching problems of air swirl and fuel injection over the speed and load range. Furthermore, the best economy figures attained have been further compromised by modifications of the engine operating parameters such as the introduction of throttling to reduce HC emissions. The fuel economy figures reviewed in this survey have been relatively disappointing. Only the direct injection engines have shown any improvement over baseline conventional gasoline engines. These baseline engines were chosen to be representative of good current engines, rather than average examples.

6. The specific torque output (i.e. BMEP) of a naturally aspirated stratified charge engine at the primary emission target will always be lower than conventional gasoline engines, unless the stratified charge engine is fitted with an air pump and exhaust oxidation device. Without exception air pumps are avoided on stratified charge engines, and the minimum air fuel ratio of

the engines is arranged to be leaner than stoichiometric. The maximum specific torques recorded from the naturally aspirated engine in this survey was around 8.5 bar. Many engines could not attain this figure, particularly those where fuel injection was occurring in the region of 50 - 0° BTDC at full load. Under these conditions, the maximum specific torque of the engine is limited by the onset of smoke. The actual smoke characteristics depend on the combustion principle. These engines also have higher particulate emissions than conventional gasoline engines.

7. A multi-fuel capability is usually displayed by stratified charge engines which resemble the diesel, and where the combustion is being controlled mainly by the rate of fuel injection. Carburetted stratified charge engines have no multi-fuel capability in the accepted sense.

8. The mechanical complexity and cost of a stratified charge engine is completely governed by the combustion principle. In general these engines are more expensive than the gasoline engine even when meeting the same emission targets. The production costs of stratified charge engines may vary from a few percent to twice the level of the gasoline engine.

9. Engine size and weight is influenced by the combustion system. The only rotary stratified charge engine reviewed, i.e. Curtiss-Wright, had a considerable advantage in this respect. However, the rotary stratified charge engine, at its present stage of development, suffers from all the same problems as the rotary gasoline engine, i.e. poor fuel consumption and very high HC emissions.

10. Full load noise is governed by the maximum rate of pressure rise, the actual shape of the pressure diagram and the maximum cylinder pressure.

    Generally the actual noise level is governed by the category:-

Full Load Noise Levels in Comparison to the Gasoline Engine

Category	Noise
1	Higher
2	Similar
3	Similar
4	Higher if pre-chamber size above 10% of clearance volume. Otherwise similar
5	Similar if stratification maintained at full load. If mixture enriched combustion becomes harsher.
6	Similar
7	Depends on type

11. Noise under idling and low load conditions is highest with unthrottled engines.

12. Startability of most of the engines reviewed was good, although some of the engines with in-cylinder injection alone, required the addition of fuel into the

main induction system during starting at very low temperatures.

13. When the coolant is cold, driveability of engines with in-cylinder fuel injection is better than with carburetted engines.

14. Turbocharging is only attractive for unthrottled engines.

15. Stratified charge versions of motorcycle engines are not economically attractive at the motorcycle emission target, but the Honda and Kushul processes may be practical for lower emission levels.

16. Engines from categories 1 to 5 were configured and rated by a jury under 26 topic areas. The overall result of the rating was that the Ford PROCO and Honda CVCC engines were possible alternatives to the gasoline engine at the primary emission target, and that these engines, together with the VW engine, were viable power plants at the secondary target. However, in achieving the secondary targets there will almost always be severe sacrifices in specific power output, driveability and fuel economy. Only the Ford PROCO system could meet the secondary target without a significant reduction in fuel economy. The performance of the VW system at the secondary targets is not proven.

GENERAL RECOMMENDATIONS

1. The scavenged pre-chamber engine (e.g. Honda CVCC) should continue to receive study as an interim measure to achieve the primary emission target. Although it has demonstrated the ability to meet the secondary target, it may not prove to be a satisfactory power plant in the long term, due to poor fuel economy and driveability. This process may also be practical for motorcycles with cylinder sizes above 200 cc.

2. The Ford PROCO emerged high in the rating study and although catalyst durability, first cost and noise problems exist, it has some attractive features. Notably the secondary emission targets have been demonstrated with virtually no loss in fuel economy compared to existing gasoline engines. Therefore, continuity of production could be achieved as the emission levels were reduced.

3. As the engine with the lowest exhaust emissions and best test bed fuel consumption of any reviewed in this survey, the MAN-FM should be applied to an automotive vehicle, so that a direct comparison can be made with other stratified charge engines. The multi-fuel capability of this engine may also prove useful in other applications.

4. The Porsche and VW engines should receive further study as configurations most likely to achieve the secondary emission targets without sacrifice in durability or engine performance.

5. Further investigation of the Kushul engine is recommended.

6. Research groups should be encouraged to study alternative methods for initiating combustion, besides compression and spark ignition. The basic premise that unthrottled engines, operating at moderate compression ratios could give better utilisation of energy than existing i.c. engines, is sound. The exhaust emission limitations associated with existing stratified charge engines is related to the method of combustion, i.e. initiating the combustion with a spark and relying on flame propagation to oxidise all the fuel.

7. In the event that alternative methods of initiating and controlling combustion are not successful, the problem of HC formation in spark ignited stratified charge engines should receive a fundamental study. This should include the source of HC emissions, and possible methods of control, both in-cylinder and in the exhaust system. It may be that the formation mechanism in single chamber and divided chamber engines will be different.

8. Understanding of combustion and heat transfer in stratified charge engines is rather limited. Further experimental studies by combustion photography, instantaneous heat transfer measurements and fuel injection droplet characteristics would establish empirical relations, and help in the formulation of complex mathematical models. Existing models are of limited use, due to out-moded and non-applicable empirical relations.

ACKNOWLEDGEMENTS

Ricardo would like to acknowledge the assistance and information given in the preparation of this report, by the following Companies:

Ford

Texaco

Curtiss-Wright

MAN

British Leyland

RICARDO CONSULTING ENGINEERS

S. 6220
12 Sept '75
FIG. D1

PROPOSED ALTERNATIVE APPROACH FOR COMBUSTION INITIATION IN RECIROCATING INTERNAL COMBUSTION ENGINE

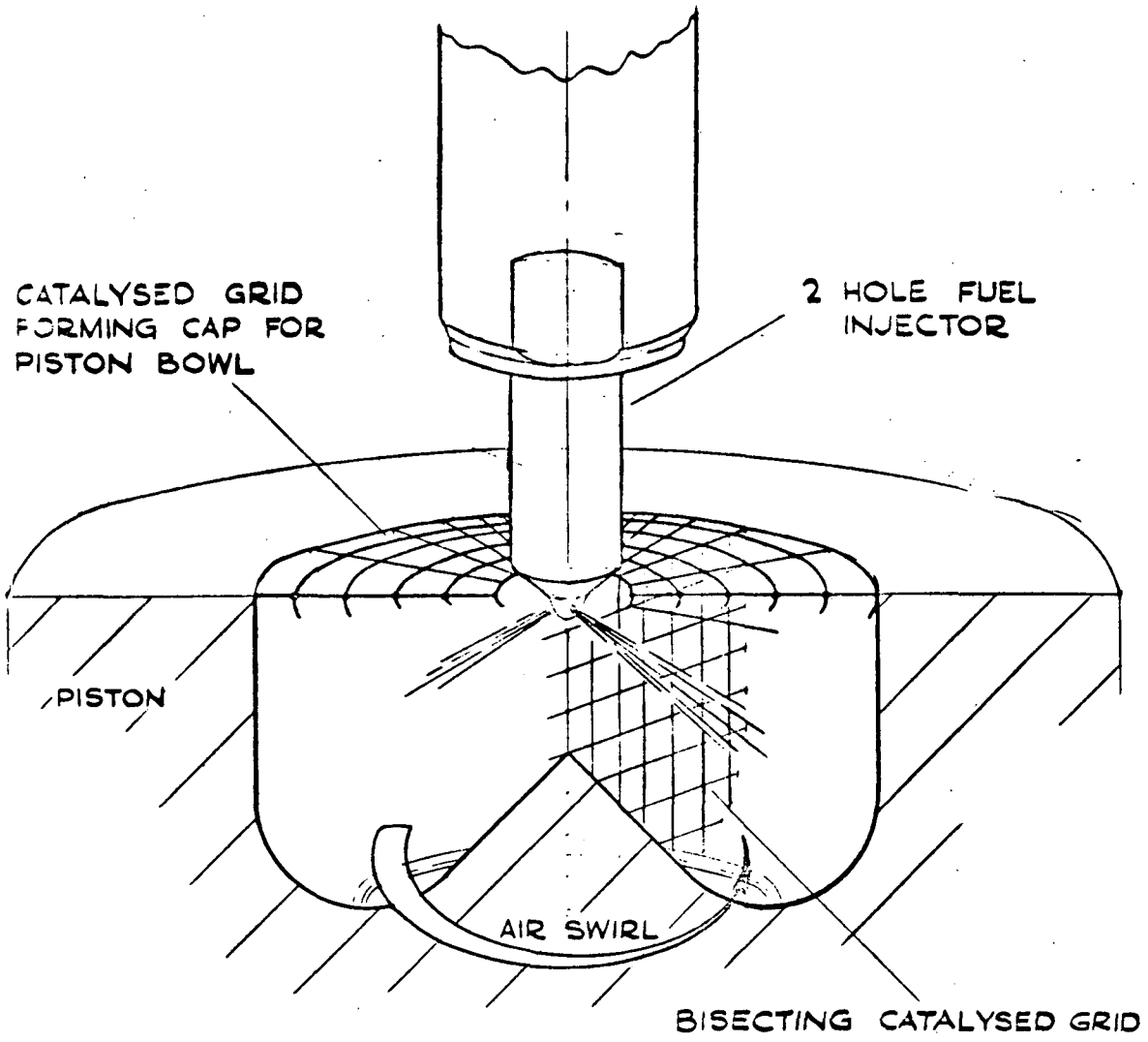

A STUDY OF STRATIFIED CHARGE FOR LIGHT DUTY POWER PLANTS

SECTION K

GLOSSARY OF TERMS

Some of the terms mentioned in the text of this report may not be familiar to the reader, so the following glossary has been compiled.

CVS-CH	1975 cold/hot start Federal test procedure using CVS equipment.
DI	Direct injection
EFI	Electronic fuel injection
EGR	Exhaust gas recirculation
IDI	Indirect injection (i.e. into a pre-chamber)
mbt	Ignition spark at minimum advance for best torque
mpg	Fuel economy in miles per U.S. gallon
NA	Naturally aspirated
RON	Fuel Research octane number
T/C	Turbocharged

TECHNICAL REPORT DATA
(Please read Instructions on the reverse before completing)

1. REPORT NO. EPA-460/3-74-011A	2.	3. RECIPIENT'S ACCESSION NO.
4. TITLE AND SUBTITLE A STUDY OF STRATIFIED CHARGE FOR LIGHT DUTY POWER PLANTS		5. REPORT DATE OCTOBER 1975
		6. PERFORMING ORGANIZATION CODE
7. AUTHOR(S) RICARDO & CO.		8. PERFORMING ORGANIZATION REPORT NO. DP
9. PERFORMING ORGANIZATION NAME AND ADDRESS RICARDO & CO. ENGINEERS (1927) LTD., BRIDGE WORKS, SHOREHAM-BY-SEA, SUSSEX, BN4 5FG. ENGLAND.		10. PROGRAM ELEMENT NO.
		11. CONTRACT/GRANT NO. 68-03-0375
12. SPONSORING AGENCY NAME AND ADDRESS ENVIRONMENTAL PROTECTION AGENCY, OFFICE OR AIR & WATER PROGRAMS, OFFICE OF MOBILE SOURCE AIR POLLUTION CONTROL, EMISSION CONTROL TECHNOLOGY DIVISION, ANN ARBOR, MICHIGAN 48105		13. TYPE OF REPORT AND PERIOD COVERED FINAL REPORT
		14. SPONSORING AGENCY CODE

15. SUPPLEMENTARY NOTES

16. ABSTRACT

The objectives of this project were to determine the acceptability of various types of stratified charge engines as potential power plants for light duty vehicles and motorcycles in America. The light duty vehicle considered was a 4/5 seat compact sedan with good acceleration capabilities and exhaust emissions below a primary target of 0.41 g/mile HC, 3.4 g/mile CO, 1.5 g/mile NO_x. A secondary target of 0.41 g/mile HC, 3.4 g/mile CO and 0.4 g/mile NO_x was also considered.

A literature survey was undertaken, comparing stratified charge engines with examples of good conventional gasoline and diesel engines. While some stratified charge engines had exhaust emission or fuel economy advantages, there were always sacrifices in other areas.

Eleven engines were configured, four of which were specifically directed towards the secondary emission targets. A method of rating the engines was derived, and the design concepts were compared with two gasoline engines by a jury panel. The overall result was that the Ford PROCO and Honda CVCC combustion processes were serious contenders to the gasoline engine at the primary emission target, and that both of these systems, together with the VW combustion process, might be suitable at the secondary targets.

17. KEY WORDS AND DOCUMENT ANALYSIS

a. DESCRIPTORS	b. IDENTIFIERS/OPEN ENDED TERMS	c. COSATI Field/Group
EXHAUST EMISSIONS STRATIFIED CHARGE ENGINES POWER PLANT RATING METHODOLOGY ENGINE DESIGN LITERATURE REVIEW	LIGHT DUTY VEHICLES LIGHT DUTY ENGINE GASOLINE/STRATIFIED CHARGE COMPARISON EMISSION CONTROLS FUEL ECONOMY	

18. DISTRIBUTION STATEMENT RELEASE UNLIMITED	19. SECURITY CLASS *(This Report)* UNCLASSIFIED	21. NO. OF PAGES
	20. SECURITY CLASS *(This page)* UNCLASSIFIED	22. PRICE

EPA Form 2220-1 (9-73)