Environmental Monitoring Series

Automated Water Monitoring Instrument for Phosphorus Contents

Office of Research and Monitoring
U.S. Environmental Protection Agency
Washington, D.C. 20460

RESEARCH REPORTING SERIES

Research reports of the Office of Research and Monitoring, Environmental Protection Agency, have been grouped into five series. These five broad categories were established to facilitate further development and application of environmental technology. Elimination of traditional grouping was consciously planned to foster technology transfer and a maximum interface in related fields. The five series are:

1. Environmental Health Effects Research
2. Environmental Protection Technology
3. Ecological Research
4. Environmental Monitoring
5. Socioeconomic Environmental Studies

This report has been assigned to the ENVIRONMENTAL PROTECTION TECHNOLOGY series. This series describes research performed to develop and demonstrate instrumentation, equipment and methodology to repair or prevent environmental degradation from point and non-point sources of pollution. This work provides the new or improved technology required for the control and treatment of pollution sources to meet environmental quality standards.

EPA Review Notice

This report has been reviewed by the Office of Research and Monitoring, EPA, and approved for publication. Approval does not signify that the contents necessarily reflect the views and policies of the Environmental Protection Agency, nor does mention of trade names or commercial products constitute endorsement or recommendation for use.

EPA-R4-73-026

June, 1973

Automated Water Monitoring Instrument For Phosphorus Contents

by

Manfred J. Prager

Contract No. 68-01-0111

Project 16020-GSB

Program Element 1B1027

Project Officer

Dr. Thomas B. Hoover
Southeast Environmental Research Laboratory
College Station Road
Athens, Georgia 30601

Prepared for

Office of Research and Monitoring
U.S. Environmental Protection Agency
Washington, D. C. 20460

For sale by the Superintendent of Documents, U.S. Government Printing Office, Washington, D.C. 20402
Price 50 cents domestic postpaid or 35 cents GPO Bookstore

ABSTRACT

A prototype instrument was developed by NUCOR Corporation, Denville, New Jersey, for automatically monitoring total phosphorus in water. The analytical principle employed was flame emission photometry. Phosphorus compounds burned in a hydrogen flame emit at about 525 millimicrons.

Conditions were established for the sensitive measurement of phosphorus in water. Operating parameters investigated included fuel and air flow rates, burner configuration, operating temperature, method of sample aerosolization, etc.

Using an ultrasonic nebulizer to aerosolize samples of triethylphosphate in water, it was possible to detect phosphorus at a concentration of less than 2 parts per billion. A procedure was worked out for distinguishing between organic and inorganic phosphorus with ion exchange resins. In measurements designed to determine interference by sodium and calcium, it was observed that the method is about 1000 times more sensitive towards phosphorus than towards sodium and 5000 times more sensitive towards phosphorus than towards calcium.

A prototype instrument was designed, fabricated, tested, and delivered to EPA, Southeast Environmental Research Laboratory.

This report was submitted in fulfillment of Contract No. 68-01-0111 under the sponsorship of the Environmental Protection Agency. Work was completed as of March, 1973.

CONTENTS

Section		Page
I	Conclusions	1.
II	Recommendations	2.
III	Introduction	3.
IV	Experimental	6.
V	Discussion	24.
VI	Acknowledgements	25.
VII	References	26.

FIGURES

		Page
1.	Schematic, Hydrogen Flame Emission Water Monitor	4.
2.	Response to Phosphorus Compound Vapors in Air	10.
3.	Response to 0.1 ppm TEP in Water	15.
4.	Response - Concentration Relationship for TEP in Water	17.
5.	Block Diagram - Electronic Circuitry	21.
6.	Instrument Wiring Diagram	22.

SECTION I

CONCLUSIONS

1. Flame emission photometry is a suitable method for monitoring phosphorus in water.

2. The method can be adapted to automated instrumentation.

3. It is possible to detect less than 2 parts per billion of phosphorus in water.

4. By the use of an ion exchange pretreatment, it is possible to separately determine inorganic and organic phosphorus.

5. The method is about 1000 times more sensitive towards phosphorus than towards sodium and 5000 times more sensitive towards phosphorus than towards calcium.

SECTION II

RECOMMENDATIONS

Additional work is recommended to more fully investigate the method, to improve the accuracy and reproducibility of the principle and to improve the design and the reliability of the instrument.

Specifically the following work is recommended:

1. Determine response for a variety of phosphorus compounds to determine whether response depends only on phosphorus content or is affected by compound structure.

2. Determine possible interference from a variety of elements at concentrations encountered in the field.

3. Determine approximate size and concentration range of particulate matter that can be tolerated in the water sample.

4. Provide for direct introduction of a water sample of 10 ml or less.

5. Improve response by achieving more reproducible background signals or background cancellation.

III. INTRODUCTION

The purpose of this project, performed by NUCOR Corporation, Denville, New Jersey, was to develop and fabricate a prototype, automated water monitor for trace quantities of phosphorus compounds, based on hydrogen flame emission spectroscopy.

Measurement of phosphorus compounds in water is of interest since pollution of water by such substances can readily occur from a variety of sources. These include leaching from ores, decomposition of organic matter, industrial wastes, detergents, pesticides, and others. The phosphorus may be present in inorganic and/or organic form. Undesirable effects in water can be attributed to various phosphorus compounds: many organic phosphorus compounds are toxic and persistent, polyphosphates interfere with coagulation, phosphates promote growth of algae, etc. It is desirable, therefore, to detect, measure, and identify phosphorus compounds in water in order to ascertain the need for and to evaluate the effectiveness of, control measures.

In view of the potential hazards due to the presence of phosphorus compounds in the environment, considerable effort has been devoted to the development of automated monitoring instrumentation for the measurement of phosphorus compounds, both in air and water. One of the most attractive analytical principles for this application is flame emission spectroscopy, because it is highly sensitive and selective and relatively easy to adapt to automated instrumentation. The method was used for this work.

This principle, the instrumentation required, and application to pollution monitoring have been described.[1] Briefly, when phosphorus compounds are introduced into a cool, fuel-rich hydrogen flame, POH radicals are formed. These produce a green emission in a region that extends beyond the flame. The spectral band, with peak emission at about 526 nm, may be isolated with an interference filter and measured with a photomultiplier tube. The presence of phosphorus in a sample can be detected by monitoring the emission at 526 nm, and the phosphorus concentration in the sample can be determined by measuring the intensity of this emission.

One apparatus suitable for such measurements is shown in Fig. 1. Hydrogen fuel from a cylinder is fed into a burner through a capillary tube and burns at the tip of this tube. An interference filter is mounted next to the burner, opposite the emission region and the photomultiplier tube is in back of the filter. Combustion air and sample are introduced into the

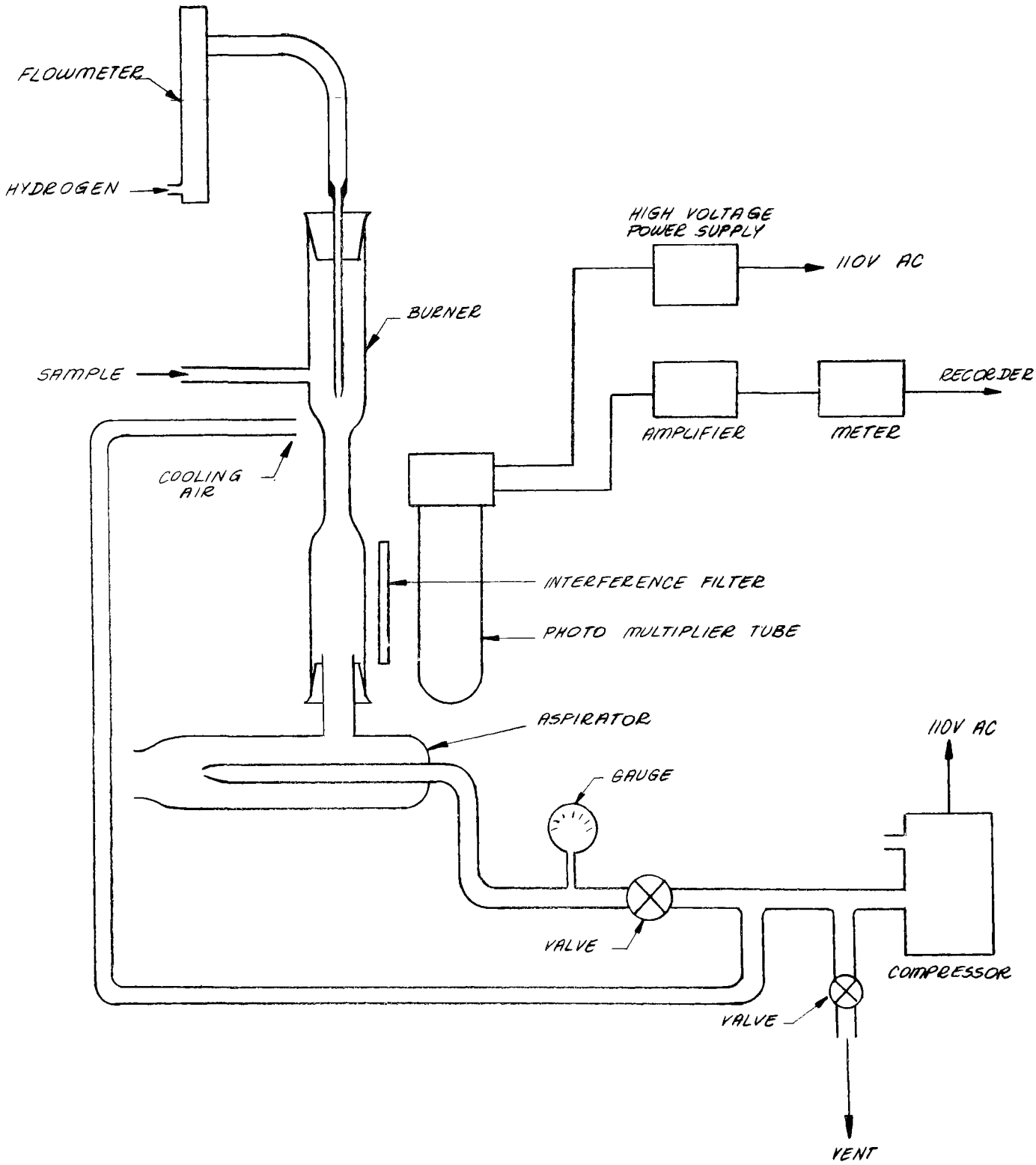

HYDROGEN FLAME EMISSION WATER MONITOR

FIGURE 1

burner in the vicinity of the flame. In the particular arrangement shown, the burner is attached to the side arm of an air driven aspirator. The sample inlet is, therefore, at a pressure somewhat below ambient, so that the combustion air and sample are sucked into the burner. A compressor supplies air, part of which is fed to the aspirator and another portion is used to cool the burner. A high voltage DC power supply furnishes the voltage required to operate the photomultiplier tube. The photomultiplier tube current is amplified and the signal is displayed on a meter and may also be recorded.

Continuous, automated flame emission air monitors for phosphorus have been under development in this country by various DOD agencies for more than ten years. Instruments with different interference filters to permit emission measurements at about 390 nm are in use to monitor air for sulfur compounds. Using an instrument developed by the Navy for air monitoring for phosphorus, some work was earlier done to investigate the feasibility of detecting phosphorus compounds in water.[2] The development of an automated water monitor for phosphorus compounds which is suitable for field use has not yet been reported in the literature.

It is the purpose of this work to develop such an instrument. Specifically, it was desired to:

1. Develop a burner capable of operating effectively during exposure to water samples.

2. Develop a sample introduction system to achieve high sensitivity and reliable burner operation.

3. Develop the necessary optical and electronic components and fabricate a working prototype instrument.

4. Evaluate the instrument in the laboratory and determine:

    a. Precision and limits of phosphorus measurement.

    b. Discrimination between organic and inorganic phosphorus compounds.

    c. Determine possible interferences, especially sodium and calcium and the feasibility of using the instrument for measuring phosphorus in sea or estuarine water.

IV. EXPERIMENTAL

Laboratory Study Instruments

The laboratory investigations prior to prototype fabrication, were performed with two instruments based on the schematic shown in Fig. 1. One was a stainless steel housing in which were mounted the burner, aspirator, interference filter, and photomultiplier tube. A second instrument employed an aluminum cabinent which contained the same components plus ignitor circuit, air control valve, plus additional electrical connectors and pneumatic fittings and lines. Because of difficulties in properly aligning the burner and air inlet fittings in this second instrument, the former one was used in most of the studies.

The burner, aspirator, and housings were designed and fabricated at NUCOR. Major commercial components included:

Interference filter: Baird - Atomic Inc., Catalog #11-92-2 with peak wavelength at 5250 Angstroms, transmittance at peak wavelength 50-70 percent and bandwidth at half peak transmittance 150 Angstroms.

Photomultiplier tube: RCA #1P21.

Photomultiplier tube power supply: John Fluke Mfg. Co., Model 412A variable high voltage DC supply.

Electrometer: Keithley Instruments, Inc., Model 610C.

Compressor: Gast Mfg. Corp., Model 1531-107-G288.

Recorder: Hewlett Packard, Model 680 5-in. strip chart recorder.

Ignitor circuit: Ignition was achieved with a high voltage spark using a circuit obtained from Ridge Electronics Corp. West Millington, N.J.

Compressed hydrogen gas was used as the fuel. Ambient air was used to support combustion and the sample was fed into this air stream and carried by it to the burner. Air was sucked into the burner because of a slight negative pressure at the air inlet created by the air driven aspirator. The aspirator was heated with a cartridge heater to prevent water condensation.

The metal burner consisted of two chambers - the flame chamber and the emission chamber. A 1/4 in. o.d. brass tube was

screwed into the flame chamber and served as the air and sample inlet. A piece of teflon rod with a hole drilled into it to accommodate a length of 17 gauge hypodermic needle tubing was also inserted into the flame chamber. The hydrogen was introduced into the burner through the hypodermic needle and burned at the end of the capillary. Flame ignition was achieved by sparking between the hypodermic tubing and the burner housing.

Since the emission is formed beyond the flame, the flame itself was not viewed in order to reduce the background signal. Coloration of the flame by extraneous substances as well as flame flicker would contribute to the background and lower the signal to noise ratio if viewed by the photomultiplier tube. To eliminate the flame from view, the flame and emission chambers were separated by 0.040 inch orifice through which the gases, but not the flame, could penetrate. A Pyrex glass tube was fitted into the emission chamber housing. The green phosphorus emission was visible in this chamber and was viewed by the photomultiplier tube through the interference filter. The emission chamber was connected to the aspirator through which the gases were exhausted.

A portion of the air from the compressor was passed over the exterior of the burner in order to cool the burner. If this is not done, phosphorus sensitivity is decreased.

Generation of Phosphorus Containing Vapors.

Initial evaluation of burner, optics, electronic and pneumatic components was performed with samples of phosphorus compounds in air rather than in water. This permitted measurement of phosphorus emission signals uncomplicated by background noise and fluctuations due to the presence of, and cooling by, water. On the basis of available vapor pressure data, triethylphosphate (TEP) appeared suitable for the generation of useful concentrations of phosphorus in air. By appropriate control of temperature and flow rates, it was possible to obtain with TEP convenient phosphorus concentrations that ranged from 10 ppm to 1.0 ppb in air.

Using TEP vapor pressure data from the literature, vapor pressure-temperature relationships and the ideal gas equation one calculates the following phosphorus concentrations in air, expressed in micrograms per liter of the saturated vapor:

°C	ug/l
22	508
24	583
25	624
26	666
28	761

By air dilution of the saturated vapor desired phosphorus concentrations in air were generated.

A length of filter paper was loosely supported in a 10 cm length of 6 mm Pyrex tubing. The paper was then saturated with triethylphosphate. One end of this tube was connected to a compressed air cylinder to provide a regulated flow of saturated TEP vapor. To the other end of the Pyrex tube was connected a hypodermic needle. The tip of the needle was inserted into the instrument air inlet. From measurements of the ambient temperature, saturated vapor flow rate and diluent air flow rate at the instrument inlet the phosphorus concentrations fed to the burner could be calculated. Triethylphosphate was added occasionally to the filter paper to assure that the air from the cylinder was saturated with TEP vapor prior to dilution at the instrument air inlet.

Initial Instrument Evaluation with Air Samples.

To evaluate burner performance, triethylphosphate vapors were added to the combustion air to give a phosphorus concentration of about 9 ppm. The effect of hydrogen and air flow rates on phosphorus response and background current were measured.

The data obtained were not sufficiently reproducible so that individual emission values could be assigned to each set of experimental conditions, nevertheless, the trend of the data allowed useful conclusions to be drawn. At a constant air flow of 200 ml/min a hydrogen flow of at least 200 ml/min was required for high sensitivity. Background response was independent of hydrogen flow.

Hydrogen Flow (ml/min)	Number of Measurements	Background (amps)	Signal (amps)
150	4	$1.0\text{-}2.3\times10^{-8}$	$2.5\text{-}4.7\times10^{-6}$
170	3	$0.7\text{-}3.6\times10^{-8}$	$1.0\text{-}2.1\times10^{-6}$
200	8	$0.8\text{-}2.4\times10^{-8}$	$1.3\text{-}10\times10^{-6}$
275	3	$1.6\text{-}3.8\times10^{-8}$	$4.8\text{-}11\times10^{-6}$
320	3	$1.3\text{-}3.5\times10^{-8}$	$5.7\text{-}13\times10^{-6}$
440	3	$0.8\text{-}2.9\times10^{-8}$	$4.4\text{-}12\times10^{-6}$

At a constant hydrogen flow of 200 ml/min, variation in the air flow between 150 to 300 ml/min showed the signal to be independent of air flow, but the background to increase with increased air flow. Measurements of the temperature of the external surface of the burner near the flame showed that the temperature also increased with increasing air flow. It is desirable to keep burner temperature low since this will keep photomultiplier tube temperature low and, therefore, its sensitivity high. In order to keep background and noise levels low and also to conserve fuel gases, hydrogen and air flow rates were maintained just high enough to achieve good sensitivity.

Using hydrogen and air flow rates of 200 ml/min, the effect of phosphorus concentration on response was determined. The data for concentrations between 9 and 0.0009 ppm were plotted on log-log paper and fell on a straight line except for the point at the highest concentration, as shown in Fig. 2. These experiments also showed that it is possible to detect less than 1 ppb of phosphorus in air. Sensitivity was judged to be satisfactory and subsequent response measurements were made with samples of phosphorus compounds in water.

Measurement of Burner Temperature.

Attempts were made to measure the external burner surface temperature. There are several reasons for performing such measurements.

1. For good performance the burner must be maintained at a relatively low temperature. If the temperature is permitted to rise too much, sensitivity to phosphorus decreases for reasons already mentioned.

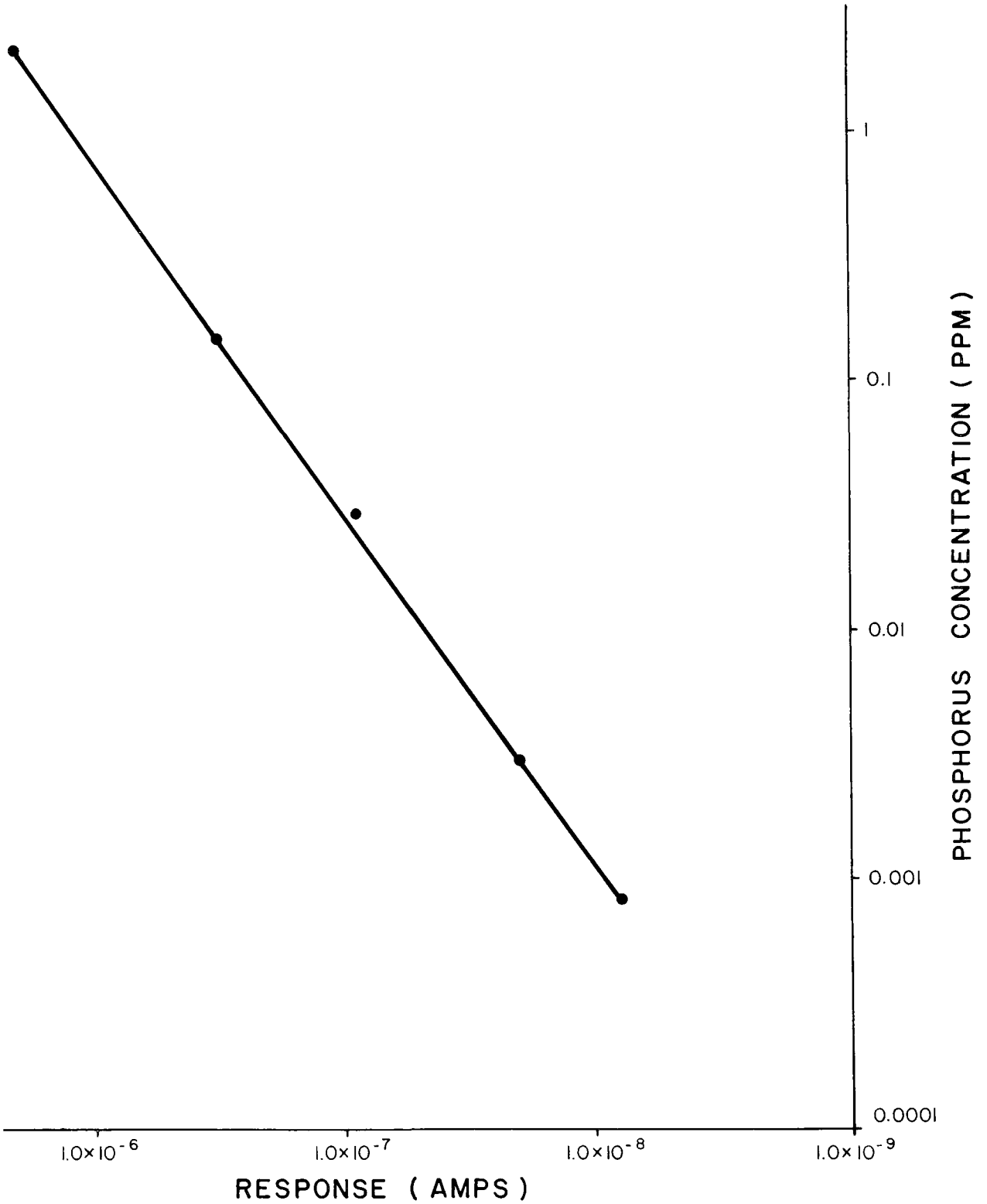

FIGURE 2

RESPONSE TO PHOSPHORUS COMPOUND VAPORS IN AIR

2. For reasons of safety, it is desirable to know that the flame is burning and that the fuel is being combusted and not escaping into the surrounding atmosphere and presenting an explosion hazard. One way to determine that the flame is on is to measure the burner temperature.

3. A high voltage spark is used to ignite the flame. The ignitor is turned off after ignition since continued sparking would be detected by the photomultiplier tube and interfere with the phosphorus measurement process. Also, in case of a flame-out, for reasons of safety, as already mentioned, the flame should be relit if the hydrogen flow is continued. It is possible to employ an automatic ignition circuit which incorporates a temperature sensor and functions when the burner temperature is below the operating temperature and shuts off when the operating temperature is reached.

4. During use of the instrument, it is important to know that the flame is on so that measurements can be made. One way to check on the instrument status is to monitor the burner temperature.

Measurements were made of the temperature of the external surface of the burner. This was done by clamping a thermocouple to the burner with the bi-metallic junction as close to the flame as possible. In 12 experiments in which the burner operated at hydrogen and air flow rates of 200 ml/min each, the burner temperature ranged from 162 to 180°F. This temperature was attained in about 20 minutes after ignition and could thereafter be maintained within 3°F. On extinguishing the flame, the burner temperature dropped more than 20°F in the first minute.

On the basis of these results, an automatic ignition circuit was designed. It consisted of a miniature thermostat that activated and deactivated the spark ignitor previously described and a light indicated ignitor status. The thermostat which incorporated a bimetal actuated contact was mounted on the exterior of the burner close to the flame. The thermostat was in series with the spark ignitor and light. The thermostat was closed during ignition and opened when the burner temperature reached 150°F. The light and spark ignitor were then deactivated. In case of a flame-out the thermostat closed when the burner temperature dropped to 145°F and reignition occurred. In practice, it was observed that the ignitor stopped sparking 7-11 minutes after the instrument was turned on and also within about 7 minutes following a flame-out.

This thermostat flame-out sensor operated satisfactorily for about two months until it burned out during an electrical short. It was not replaced since flame status could be monitored simply by noting the photomultiplier current indicated by the electrometer.

The current observed when the flame was on and there was no phosphorus in the flame (flame background) was about an order of magnitude higher than when the flame was out (dark current). The flame background was usually $1-3 \times 10^{-8}$ amps, while the dark current was usually $2-3 \times 10^{-9}$ amps. This method of monitoring flame status has the advantage that a meter indication can be obtained in a few seconds, but the disadvantage that ignition had to be performed manually. If a flame out occurred while the instrument was left unattended for extended periods, appreciable quantities of unburned hydrogen could escape. It became evident during the course of the work that it was possible to design a nebulizer-burner system that resulted in only very few flame-outs. It is desirable, however, to incorporate into a flame emission monitor a flame out sensor, with an automatic ignitor or alternatively automatic shut-off of hydrogen flow.

Measurement of Response to Phosphorus in Water.

After establishing satisfactory operation of the laboratory instrument with air samples containing phosphorus, measurements were made of the instrument response to phosphorus in water. Triethylphosphate was used for these experiemtns also. Samples were made up in tap water and also in distilled water to determine the effect on response of impurities in the water. It was anticipated that the sensitivity attainable would depend largely on the nebulization step. It was reasoned that good performance would require that the sample must reach the flame in the form of exceedingly fine droplets that could be vaporized during the short period that they were in the flame. It was further thought that the finer the aerosol particles, the better the chance of reaching the flame without dropping out, the smaller the effect on flame temperature, and the less chance of extinguishing the flame. Liquid samples in flame emission and absorption spectroscopy are commonly aerosolized with pneumatically driven nebulizers. Since finer droplets can apparently be obtained with ultrasonic nebulizers, it was thought that these may provide better performance. Some studies described in the literature indicate that atomic absorption intensities are greater usually by factors of 2 to 5, if samples are aerosolized ultrasonically rather than pneumatically.

It was decided to compare performance obtainable with both types of nebulizers. Most of the work employing pneumatic

aerolization was performed with the nebulizer used in the Jarrell-Ash flame emission/atomic absorption spectrophotometer. The ultrasonic nebulizer used was the Mistogen Equipment Company, Model EN142B electronic nebulizer. This unit is used primarily in hospitals and homes to produce finely atomized medications for inhalation therapy.

To the exit nozzle of the aerosol breathing tube of the ultrasonic nebulizer was attached a hose nipple in order to funnel the aerosol into a narrower stream for impingement on the instrument's sample inlet. The nipple was maintained about 2 inches from the sample inlet. The pneumatically nebulized aerosol stream was fed either directly into the burner's sample inlet or alternatively was first fed at right angles to the instrument through an atomizer flask to remove large droplets and prevent these from entering into the burner. Various configurations of atomizer flasks were used.

The burner was operated initially with water samples under conditions which had previously resulted in excellent sensitivity toward phosphorus in air. However, when water samples were sprayed into the burner with a pneumatic atomizer, only those containing as much as one part per thousand of triethylphosphate could be detected, whether the spray was aimed directly at the burner or whether an atomization flask intervened. The measured emission from samples of phosphorus in water was, therefore, much less than from air samples containing the same weight of phosphorus. Possible causes for the poor sensitivity were thought to be: (1) too little of the aerosol reached the flame (2) too little of the aerosol was vaporized in the flame because (a) droplets were too large (b) residence time was too short (c) flame was too cool.

It was occasionally observed that on shutting off the nebulizer air supply the signal would decrease for a few seconds, then suddenly rise to a larger value than was observed during aerosolization and afterwards decrease to the background level. One possible explanation for this phenomenon is that after aerosol generation was stopped, there remained suspended in the air near the burner inlet a relatively large proportion of the smaller droplets which were more easily vaporized in the burner and more sensitively detected than the larger ones. Alternatively, perhaps the signal increased as the cooling of the flame by water lessened.

A tee was inserted between the atomization flask and the burner inlet through which larger water droplets not eliminated in the atomization flask might be drained and prevented from entering the burner. This modification improved per-

formance and resulted in a detectability of 10 ppm triethylphosphate. It was observed that the burner's sample inlet remained much drier after insertion of the tee. Samples containing 1 ppm TEP could be detected only occasionally.

The burner used was originally designed to measure phosphorus or sulfur in air. To achieve a rapid response and to keep hydrogen consumption low the combustion chamber volume, sample inlet and hydrogen jet, which affects flame size, were kept quite small. It was thought that an increase in the sample inlet crossectional area would allow more liquid aerosol to reach the flame and that a larger hydrogen jet would increase the size of the flame and also its temperature and would permit more droplets to vaporize and be measured. These modifications were made and resulted in improved sensitivity and samples containing 1 ppm TEP could be detected consistently. In some experiments, the sample inlet tube was heated electrically. At times it seemed that this pre-volatilization step improved the phosphorus response. Since the benefit was not always obtainable this procedure was abandoned. If additional sensitivity is desired pre-heating of the sample should be further investigated.

On substituting the ultrasonic nebulizer for the pneumatic one, performance was significantly improved. It became possible to detect 0.01 ppm TEP. With the pneumatic nebulizer 1 ppm TEP was the lowest concentration that could be measured. In addition, flame outs were practically eliminated. With the ultrasonic nebulizer, the aerosol particles are produced at a lower pressure, essentially ambient, compared to at least 6 psi when using the pneumatic device. Further, fewer large droplets and less liquid condensation were observed. It is believed that operation at ambient pressure and/or elimination of many of the large droplets greatly reduced the number of flame-outs encountered. Improved sensitivity is also attributed to the smaller aerosol particle size.

The instrument response to 0.1 ppm TEP in water aerosolized ultrasonically is shown in Fig. 3. The response to water is shown also for comparison. The two spikes observable in the TEP response tracing are believed to be caused by water droplets in the instrument disturbing the air flow pattern. Such spikes are more frequently encountered when the aspirator is not heated. It is believed that raising the pneumatic system to a higher temperature by heating the aspirator or not cooling the burner to avoid water condensation will eliminate the spikes. The initial response could be observed in about 3 seconds and the response was 90 percent complete in about 15 seconds.

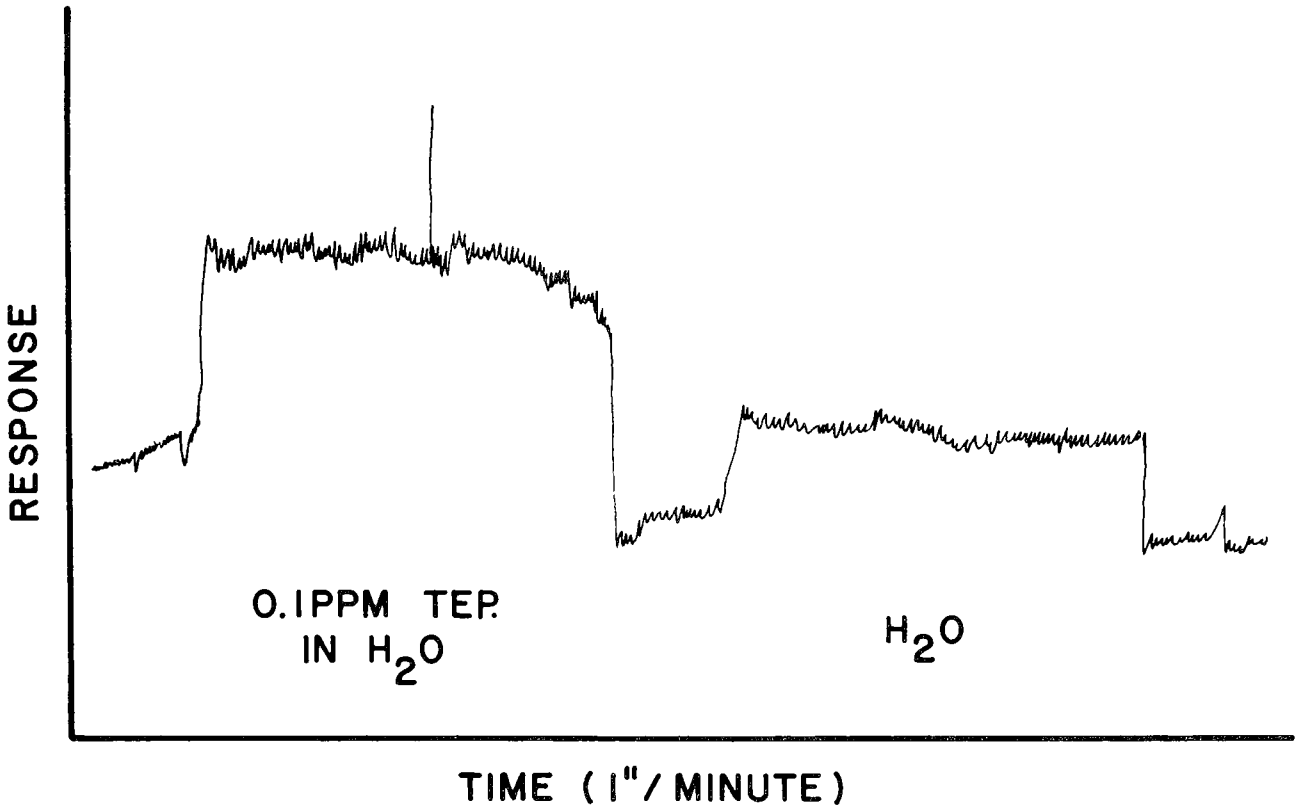

FIGURE 3

RESPONSE TO 0.1PPM TEP. IN H_2O

In Figure 4 is shown the effect of concentration on response. When plotted on graph paper a linear relationship was observed between the net signal (instrument response to sample-instrument response to water blank) and the phosphorus concentration in the sample.

As part of a study to determine the feasibility of distinguishing between organic and inorganic phosphorus compounds, some measurements were made with ammonium phosphate. A smaller response was obtained with dibasic ammonium phosphate than with triethylphosphate. Using solutions containing 0.18 parts per million of phosphorus each, the average ratio of the responses obtained with triethylphosphate and water was 1.7 while the average ratio of responses with ammonium phosphate and water was 1.25. No attempts were made to ascertain the reason for this difference in response between the two phosphorus compounds, but it may be that the inorganic phosphorus compound is not as readily broken down as the organic one at the relatively low flame temperature used.

Distinction Between Inorganic and Organic Phosphorus Compounds.

One of the purposes of the research was to determine the feasibility of obtaining measurements of both the organic and the inorganic phosphorus content of the water. Since the flame emission determination of phosphorus at the analytical wavelength of 525 nm depends on the excitation of the POH radicals, the instrument should respond to the total phosphorus content of the sample, both inorganic and organically bound. A separation of the two types of phosphorus compounds was, therefore, required in order to obtain measurements of inorganic and organic phosphorus in the water. The use of ion exchange resins for this purpose was studied.

Satisfactory results were achieved with a mixed ion exchange resin, Rohm and Haas Amberlite Monobed MB-1 resin. A one foot long bed of the resin was used and samples were passed only one time through the bed. For these experiments diammonium hydrogen phosphate was used as the inorganic and triethylphosphate as the organic phosphorus compound. In order to avoid interaction of the ion exchange resin with elements other than phosphorus, solutions were prepared with water that was previously passed through the ion exchange resin bed. Typical results from flame emission measurements are shown in the table below:

Sample	Current (amps)
1 ppm TEP in deionized H_2O	4.1×10^{-8}
1 ppm TEP in deionized H_2O after passage through resin bed.	3.9×10^{-8}

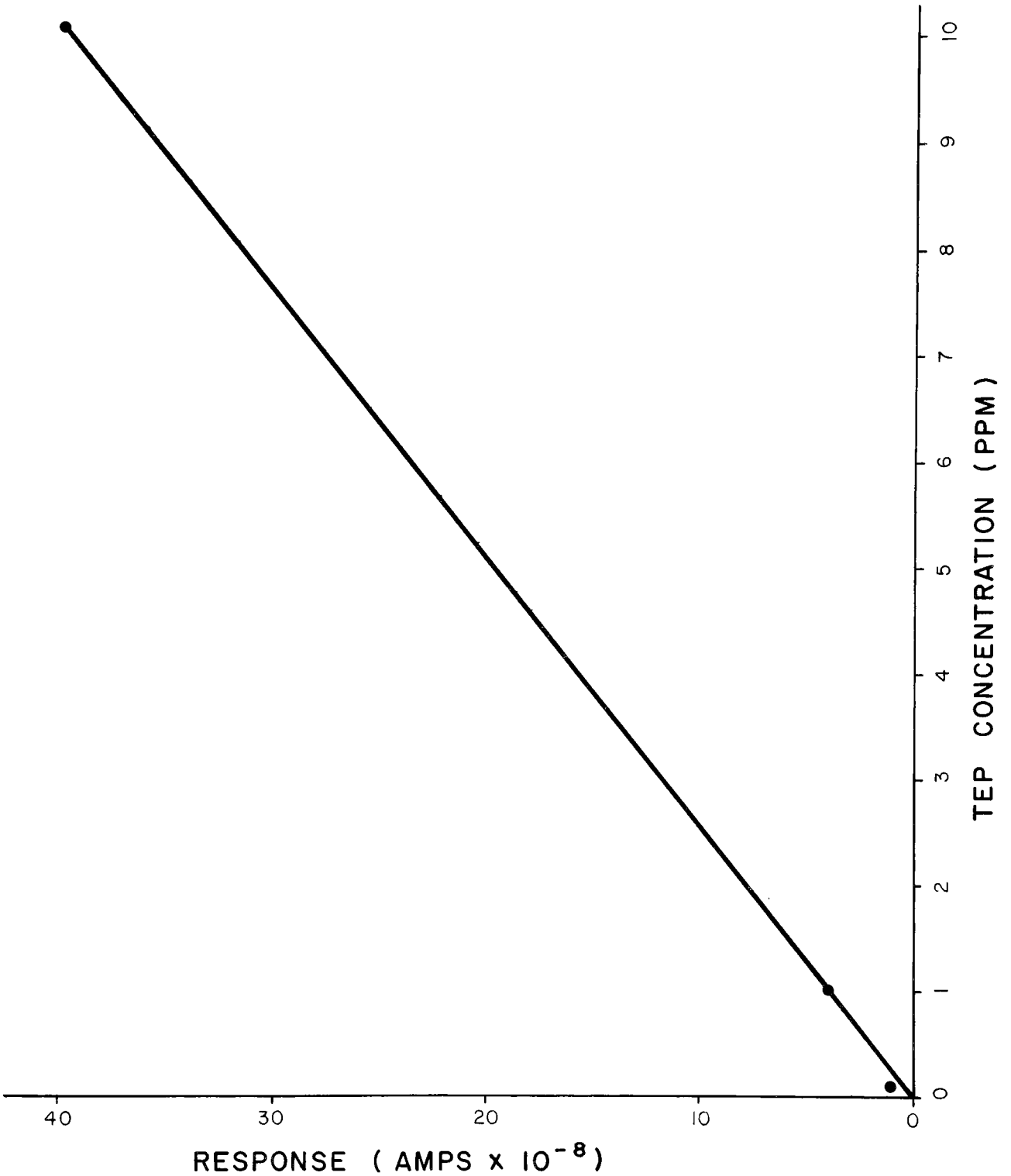

FIGURE 4

RESPONSE - CONCENTRATION RELATIONSHIP FOR TEP IN WATER

Sample	Current (amps)
3 ppm $(NH_4)_2HPO_4$ in deionized H_2O	3.7×10^{-8}
3 ppm $(NH_4)_2HPO_4$ in deionized H_2O after passage through resin bed	2.9×10^{-8}
deionized H_2O	2.8×10^{-8}

The data showed that removal of inorganic phosphorus by the ion exchange resin was practically complete after a single passage through the ion exchange resin bed. The organic phosphorus compound, on the other hand, was not removed by the ion exchange resin.

To distinguish between inorganic and organic phosphorus one would perform two measurements. One sample would be measured directly for total phosphorus content. A second sample would be passed through a mixed ion exchange resin bed for removal of inorganic phosphorus and a flame emission measurement of the effluent from the ion exchange resin bed gives a measure of the organic phosphorus content. The difference between the two measurements represents the inorganic phosphorus. This scheme requires that only phosphorus gives a measureable response or alternatively compensation for, or prior removal of interfering substances.

It should be possible to get a measurement of inorganic and organic phosphorus in the presence of interfering cation concentrations by the use of two ion exchange columns. The sample would be passed through a cation exchange column to replace cations in the sample by hydrogen ions. A determination on part of the resultant solution would give a measure of total phosphorus. Another portion of the solution would be passed through a second column containing an anion exchange resin to remove inorganic phosphorus. A measurement on the solution obtained from this second exchange procedure would provide the organic phosphorus content. As before, the difference between the two measurements would give the inorganic phosphorus content.

This hypothesis was tested with two different cation exchange resins, J. T. Baker No. 4622 and Rohm and Haas IR-120 used in conjunction with J. T. Baker anion resin No. 4606. It was observed that a solution of dibasic ammonium phosphate containing 0.5 ppm phosphorus gave the same response whether passed through the cation exchange columns or not. (The solution was prepared with water that had previously been passed through a cation exchange column.) When subsequently

passed through an anion exchange resin bed, the resultant solution gave the same emission response as water passed through an anion exchange resin bed. These data show that the cation exchange resin does not affect inorganic phosphorus, and that the anion exchange bed removes the inorganic phosphorus.

One unexpected result was obtained. Tap water gave an emission response of lower intensity than water that was passed through either of the two cation exchange columns. (Identical signals were obtained from tap water and water passed through the anion exchange resin bed.) It seems that on passage through the cation exchange columns, something was introduced into the sample that gives a response. It is believed that the response is not due to hydrogen ions obtained in the exchange reaction, but due to some other material introduced from the cation exchange resin bed. Contact with Rohm and Haas indicates that this is possible and that conditioning of the column prior to use is recommended.

Potential Interferences.

Work done prior to this study with a number of inorganic compounds showed that under the experimental conditions used at that time, of those cations and anions tested, only sodium and magnesium gave a measureable response. The concentrations used corresponded to the mean concentration found in potable water supplies of the 50 largest U.S. cities, as published by the U.S. Geological Survey.

During this study, only the responses from calcium and sodium compounds were measured. Solutions of calcium chloride and sodium nitrate were prepared with water that was previously passed through the mixed ion exchange resin bed. Chloride and nitrate ions are known not to respond at the concentrations used. Measurements were made with solutions containing up to 170 ppm calcium. The lowest calcium concentration that was reliably detected was 32 ppm which gave a signal corresponding to about 3 ppb of phosphorus. In the concentration range of 50 to 170 ppm calcium, the method was found to be about 5000 times more sensitive towards phosphorus than towards calcium.

Sensitivity of the instrument towards sodium was considerably greater than towards calcium. Measurements performed with sodium concentrations between 7 and 112 ppm, indicated a minimum detectability of 3 ppm of sodium. The signal from this concentration was equivalent to that from about 4 ppb of phosphorus. Over the concentration range measured instrument sensitivity was 750 to 1000 times greater toward phosphorus than towards sodium.

The possibility of removing interfering concentrations of sodium and calcium by ion exchange was also studied. Solutions containing 169 ppm calcium or 112 ppm sodium were passed through a one foot bed of Rohm and Haas Amberlite Monobed ion exchange resin MB-1, a mixed resin. Flame emission measurements were then made. In both cases, the emission intensities were identical to those obtained with deionized water, indicating complete removal of detectable sodium or calcium in one pass through the ion exchange column. For analysis of samples containing inorganic phosphorus, a cation exchanger should be used.

Design of Prototype Instrument.

On the basis of the experimental work described above, the prototype instrument to be delivered to EPA was designed. The performance achieved in the experimental investigations was judged to be satisfactory and the optical filter, photomultiplier tube, ignitor and with minor modification the burner and pneumatic system were considered suitable for use in the prototype. Since a laboratory variable power supply for the photomultiplier tube and Keithley electrometer for measuring the response were used in the investigative phase appropriate substitutes were sought for incorporation into the prototype. A power supply and an amplifier were selected that NUCOR has used previously in radiation monitors.

A portable cabinet, 12" x 14-1/8" x 18" with removable front panel was selected. It was decided to mount all pneumatic components needed to operate the instrument on the front panel except for the compressor used to supply the air required by the instrument. Power supply and electrometer were mounted on a base inside the cabinet. Any sample preparation, e.g., aerosolization, ion exchange separation, etc. would also be performed externally.

The burner, filter, and photomultiplier tube are mounted on the bottom plate of a light tight housing. A Baird-Atomic Inc. one-inch diameter filter with peak wavelength at 525 nm (catalog number 11-97-2) and an RCA 1P21 photomultiplier tube are used. A 1-1/2" long, 1/4" i.d. stainless steel tube, threaded into the burner, extends through the burner housing and front panel and serves as the inlet for the combustion air and the sample. The ignitor is mounted on the outside of the burner housing.

Air from a compressor, external to the instrument is supplied through a fitting in the front panel. A Gast Manufacturing Co., Model 1531 oilless compressor is furnished. Part of the air from the compressor is vented before entering the instru-

ment. In the instrument the air stream is split. A portion regulated with a Hoke "Milli-Mite" metering valve with micrometer provides the driving air for the aspirator which is mounted on the bottom of the burner housing. The rest of the air is passed through a Dwyer Instruments, Inc., Model VFB 4 inch flowmeter to the outside of the burner near the flame and serves to cool the burner. The aspirator, heated with a Chromalox cartridge heater to prevent water condensation, attached to the exit of the burner creates a slight negative pressure at the sample inlet. This allows combustion air and sample to be sucked into the burner. The combustion air flow rate is adjustable by means of the Hoke valve. Air flow control valve and flowmeter are mounted on the front panel. Metered hydrogen fuel from a cylinder is supplied by means of a fitting on the instrument panel.

Electronic Design.

The electrical design of the equipment consists primarily of a photomultiplier detector operated in the d-c mode operating into a d-c electrometer amplifier with ameter readout. The circuitry in block diagram form is shown below, Figure 5. The instrument wiring diagram is Figure 6.

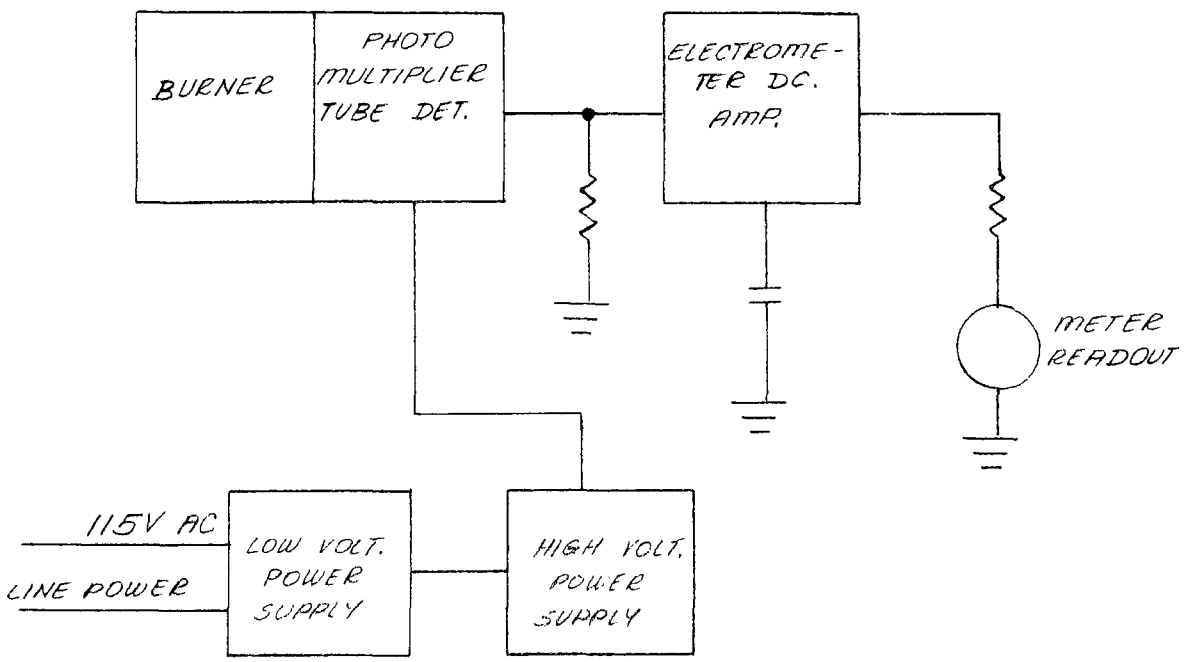

FIGURE 5.

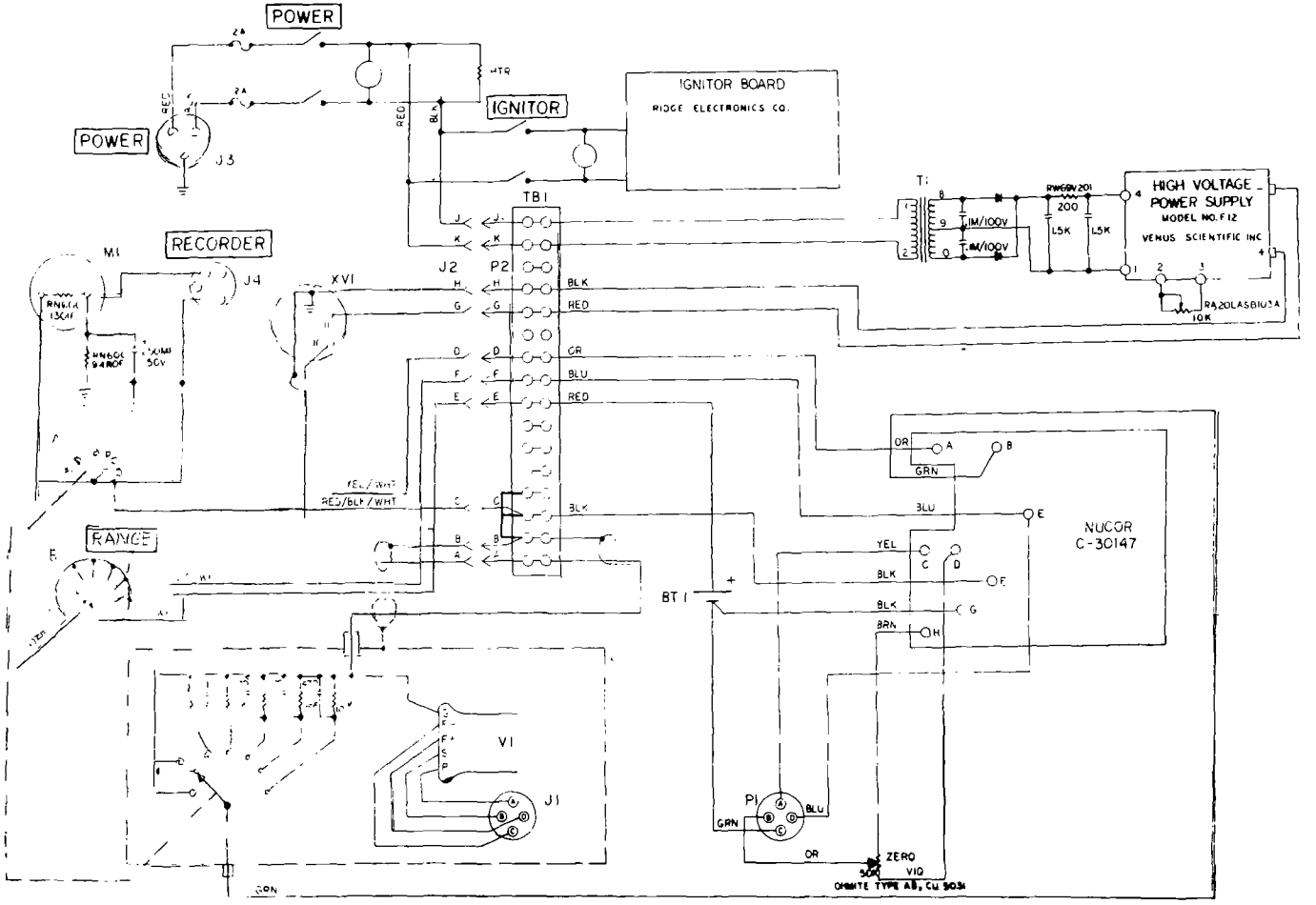

FIGURE 6: INSTRUMENT WIRING DIAGRAM

D 9/350

The photomultiplier tube is operated at approximately 800 volts d-c as supplied by the H.V. power supply. The output of the photo tube is inserted directly to a high impedance electrometer employing negative feedback for stability. The photomultiplier tube produces an electrical signal commensurate with the quantity of light which strikes the photo cathode. The electrical signal, approximately 10^{-6} to 10^{-10} amperes depending on the light level is measured and indicated by means of a hybrid-tube-transistor electrometer amplifier employing negative feedback. The electrometer operates from a self-contained battery powered power converter. The output of the electrometer is displayed on a 4-1/2" panel meter.

The photomultiplier tube operates on 800 volts derived from a sealed H.V. power supply module. The high voltage power supply is operated via a low voltage power supply operating from normal line power.

SECTION V.

DISCUSSION

Comparison of the data obtained with phosphorus in air and phosphorus in water samples (Figures 2 and 4) indicates that different phenomena control the emission response. With phosphorus in air samples, the response varies linearly with concentration when plotted on log-log paper. With phosphorus in water samples, the response-concentration relationship is linear. Further, the response to phosphorus in air is much larger than that to phosphorus in water.

For example, a net response of $1x10^{-7}$ amps was obtained with 0.03 ug/l phosphorus in air and with 2.5 ppm TEP (or 0.4 ppm phosphorus) in water. In the case of air samples, about 0.02 ug/min of phosphorus was introduced into the instrument and except for small amounts (losses on sample inlet wall, etc.) was probably almost entirely detected. Water was aerosolized at a rate of about 3 cc/min. and phosphorus at a rate of 1.2 ug/min. Phosphorus in air was supplied through a hypodermic needle inserted into the instrument's sample inlet tube. Consequently, phosphorus losses prior to reaching the instrument were minimal. The nebulizer hose, which supplied the aerosol sample, was mounted about 3 inches from the instrument sample inlet in order to minimize flame outs through introduction of excessive amounts of water. Significant amounts of aerosol emitted by the hose never entered the instrument. In addition, considerable quantities of liquid that were aerosolized in the nebulizer chamber condensed in the 2 feet long sample hose. Assuming that 25 percent of the aerosolized sample reached the burner, phosphorus in water passing through the burner at a rate of 0.3 ug/min. gave a response equal to that from phosphorus in air passing through the burner at a rate of only 0.021 ug/min. Phosphorus in water is therefore detected much less sensitively than in air. It is believed that the poorer sensitivity with water samples may be attributed to (a) the need to volatilize the phosphorus prior to excitation during the short residence time in the flame, and (b) cooling of the flame by water. In separate experiments, it was observed that on cooling the burner, phosphorus in air is measured at reduced sensitivity. Preheating of the aerosol or reducing air flow rate to increase residence time in the flame may improve further the sensitivity to phosphorus in water.

SECTION VI

ACKNOWLEDGEMENTS

The NUCOR Project Manager was Mr. H. J. Cooley. Dr. M. J. Prager was Principal Investigator. Mr. Cooley and Mr. F. Riggin developed the electronic circuitry. Mr. E. Weirich assisted in the mechanical design of the instrument.

EPA Project Officer was Dr. T. B. Hoover, Southeast Environmental Research Laboratory.

SECTION VII

REFERENCES

1. Prager, M. J. "Pollution Monitoring by Flame Emission Spectroscopy", Optical Spectra, 5, No. 8, p. 28 (1971).

2. Prager, M. J., Deblinger, B., and Kalinsky, J. L. "Water Monitoring for Trace Quantities of Organophosphorus Compounds with a Hydrogen Flame Emission Detector" presented at the 159th Meeting, American Chemical Society, Houston, Texas, February, 1970.

☆ U. S. GOVERNMENT PRINTING OFFICE : 1973—514-156/359

SELECTED WATER RESOURCES ABSTRACTS

INPUT TRANSACTION FORM

1. Report No.

2.

3. Accession No.

W

4. Title: Automated Water Monitoring Instrument for Phosphorus Contents

5. Report Date

6.

8. Performing Organization Report No.

7. Author(s): Prager, Manfred J.

10. Project No.: 16020-GSB

9. Organization: NUCOR Corporation, Nuclear Division
2 Richwood Place, Denville, N.J. 07834

11. Contract/Grant No.: 68-01-0111

13. Type of Report and Period Covered

12. Sponsoring Organization

15. Supplementary Notes

Environmental Protection Agency Report No. EPA-R4-73-026, June 1973

16. Abstract A prototype instrument was developed by NUCOR Corporation, Denville, N.J., for automatically monitoring total phosphorus in water. The analytical principle employed was flame emission photometry. Phosphorus compounds burned in a hydrogen flame emit at about 525 millimicrons. Conditions were established for the sensitive measurement of phosphorus in water. Operating parameters investigated included fuel and air flow rates burner configuration, operating temperature, method of sample aerosolization, etc. Using an ultrasonic nebulizer to aerosolize samples of triethylphosphate in water, it was possible to detect phosphorus at a concentration of less than 2 parts per billion. A procedure was worked out for distinguishing between organic and inorganic phosphorus with ion exchange resins. In measurements designed to determine interference by sodium and calcium, it was observed that the method is about 1000 times more sensitive towards phosphorus than towards sodium and 5000 times more sensitive towards phosphorus than towards calcium. A prototype instrument was designed, fabricated, tested, and delivered to EPA, Southeast Environmental Research Laboratory.

17a. Descriptors

17b. Identifiers

17c. COWRR Field & Group

18. Availability

19. Security Class. (Report)

20. Security Class. (Page)

21. No. of Pages

22. Price

Send To:

WATER RESOURCES SCIENTIFIC INFORMATION CENTER
U.S. DEPARTMENT OF THE INTERIOR
WASHINGTON, D. C. 20240

Abstractor

Institution