EPA-460/3-77-004
August 1977

STUDY OF EMISSIONS FROM 1966 THROUGH 1976 MODEL YEAR LIGHT-DUTY VEHICLES IN LOS ANGELES, ST. LOUIS, AND WASHINGTON, D.C.

U.S. ENVIRONMENTAL PROTECTION AGENCY
Office of Air and Waste Management
Office of Mobile Source Air Pollution Control
Emission Control Technology Division
Ann Arbor, Michigan 48105

EPA-460/3-77-004

STUDY OF EMISSIONS FROM 1966 THROUGH 1976 MODEL YEAR LIGHT-DUTY VEHICLES IN LOS ANGELES, ST. LOUIS, AND WASHINGTON, D.C.

by

Richard Carlson

Olson Laboratories, Inc.
421 E. Cerritos Avenue
Anaheim, California 92805

Contract No. 68-03-2379

EPA Project Officer: Thomas C. Bejma

Prepared for

ENVIRONMENTAL PROTECTION AGENCY
Office of Air and Waste Management
Office of Mobile Source Air Pollution Control
Emission Control Technology Division
Ann Arbor, Michigan 48105

August 1977

This report is issued by the Environmental Protection Agency to report technical data of interest to a limited number of readers. Copies are available free of charge to Federal employees, current contractors and grantees, and nonprofit organizations - in limited quantities - from the Library Services Office (MD-35), Research Triangle Park, North Carolina 27711; or, for a fee, from the National Technical Information Service, 5285 Port Royal Road, Springfield, Virginia 22161.

This report was furnished to the Environmental Protection Agency by Olson Laboratories, Inc., 421 E. Cerritos Avenue, Anaheim, California 92805, in fulfillment of Contract No. 68-03-2379. The contents of this report are reproduced herein as received from Olson Laboratories, Inc. The opinions, findings, and conclusions expressed are those of the author and not necessarily those of the Environmental Protection Agency. Mention of company or product names is not to be considered as an endorsement by the Environmental Protection Agency.

Publication No. EPA-460/3-77-004

FOREWORD

Average emission factors are used in assessing the degree to which in-use vehicles comply with applicable standards, developing emissions and transportation control strategies, and forecasting ambient air quality. This emission factor program was initiated to provided updated light-duty vehicle emissions data for use in analyzing various mobile source control strategies, to assess the impact of mobile sources with advanced emission systems on air quality, and to provide data to assess the effectiveness of inspection/maintenance programs in reducing mobile source contributions to air quality. This information will be useful in providing states, municipalities, and other agencies with data relative to the contribution of automobiles to emission inventories.

ABSTRACT

A study of exhaust emissions from consumer-owned light-duty vehicles and light-duty trucks was performed in the Los Angeles, California; St. Louis, Missouri; and Washington, D.C. areas to determine the emission characteristics of 1965 through 1976 vehicles.

Olson Laboratories, Inc., performed exhaust emission tests on 200 vehicles in Los Angeles, California; 506 vehicles in St. Louis, Missouri; and 133 vehicles in Washington, D.C. All vehicles were tested using the 1975 Federal Test Procedure. Sulfate tests were performed on 82 vehicles in St. Louis. Evaporative emission tests were performed on 20 vehicles in Los Angeles. Additional emission tests were conducted on particular vehicles including Highway Fuel Economy Tests, modal tests, and a series of five short-cycle tests.

CONTENTS

Foreword		iii
Abstract		iv
Figures		vi
Tables		vii
Acknowledgements		viii
1	Introduction	1
2	Conclusions	2
2.1	Program Objectives	2
2.2	Program Design	2
2.3	Test Vehicle Procurement	3
2.3.1	Test Vehicle Selection	3
2.3.2	Incentives	4
2.3.2	Test Vehicle Handling	4
2.4	Facilities and Equipment	4
2.4.1	Test Locations	4
2.4.2	Constant Volume Samplers	5
2.4.3	Emission Analysis Consoles	5
2.4.4	Laboratory Standard Calibration Gases	6
2.4.5	Chassis Dynamometer	6
2.4.6	Sealed Housing For Evaporative Determination (SHED)	6
2.4.7	Sulfate Tunnel	6
2.4.8	Miscellaneous Equipment	6
2.5	Equipment Qualification, Calibration, and Cross-Check	7
2.5.1	Constant Volume Sampler (CVS)	8
2.5.2	Emission Analysis Console	8
2.5.3	Chassis Dynamometer	9
2.5.4	Sealed Housing For Evaporative Determination (SHED)	9
2.5.5	Sulfate Determination	9
2.6	Test Procedures	9
2.6.1	Vehicle Preparation	9
2.6.2	Equipment Preparation	10
2.6.3	Sulfate Emission Test Procedure	10
2.6.4	Federal Exhaust Emission Test Procedure	11
2.6.5	Evaporative Emission Test Procedure	11
2.6.6	Highway Fuel Economy Test Procedure	11
2.6.7	Modal Exhaust Emission Test Procedure	11
2.6.8	Federal Short-Cycle Test Procedure	14
2.6.9	New York/New Jersey Acid Test Procedure	14
2.6.10	Clayton Key-Mode Emission Test Procedure	14
2.6.11	Two-Speed Idle Test Procedure	15
2.6.12	Federal Three-Mode Test Procedure	15
2.6.13	Daily Test Schedule	16
2.7	Data Handling	16
2.7.1	Data Collection	16
2.7.2	Data Processing	24
2.7.3	Quality Control	24
2.7.4	Calculation of Results	24
3	Discussion of Test Results	28
3.1	Federal Test Procedure Emission and Fuel Economy	28
3.2	Modal Emissions and Fuel Economy	53

CONTENTS (Continued)

3.3	Sulfate Emissions	52
3.4	Evaporative Emissions	52
3.5	Highway Fuel Economy	52
3.6	Federal Short-Cycle Emissions	52
3.7	New York/New Jersey Short-Cycle Emissions	52
3.8	Clayton-Key Mode Emissions	52
3.9	Two-Speed Idle Test Emissions	52
3.10	Federal Three-Mode Emissions	52

Appendices

A	Listing of Vehicle and Test Parameters	57
B	Listing of Vehicle Use Data	79
C	Listing of Test Vehicle Maintenance Data	101
D	Listing of Sulfate Test Procedure Results on Individual Vehicles	123
E	Listing of Federal Test Procedure Results on Individual Vehicles	129
F	Listing of Evaporative Emission Results on Individual Vehicles	307
G	Listing of Highway Fuel Economy and Emission Result On Individual Vehicles	313
H	Listing of Modal Results on Individual Vehicles	321
I	Listing of Federal Short-Cycle Emission Results on Individual Vehicles	543
J	Listing of New York/New Jersy Short-Cycle Emission Results on Individual Vehicles	557
K	Listing of Clayton Key-Modes Emission Results on Individual Vehicles	571
L	Listing Two-Speed Idle Emission Results on Individual Vehicles	585
M	Listing of Federal Three-Mode Emission Results on Individual Vehicles	599

FIGURES

Number		Page
1	Dilution Tunnel	12
2	Los Angeles and Washington Basic Testing Sequence	17
3	St. Louis Basic Testing Sequence	18
4	Los Angeles 1976 Vehicles (24) Without Evaporative Emissions	19
5	Evaporative Test on 20 1976 Vehicles in Los Angeles	20
6	17 1975/1976 Light-Duty Truck Testing Sequence	22
7	St. Louis 44 Vehicles (1976) Testing Sequence	23

TABLES

Number		Page
1	Summary of Vehicle Makes.	29
2	Summary of Test Vehicle Characteristics by Model-Year . .	33
3	Exhaust Emission Test Results by Model-Year for Passenger Cars	35
4	Exhaust Emission Test Results for Light-Duty Trucks . . .	38
5	Passenger Cars Meeting Federal Standards.	41
6	1975 Light-Duty Trucks Meeting Federal Standards.	44
7	1976 Passenger Cars Meeting 1976 Federal Standards. . . .	47
8	Summary of Modal Emission Results on 2,000 Vehicles . . .	50
9	Summary of Sulfate Measurements	54
10	Summary of Evaporative Emission Measurements.	55
11	Summary of Short-Cycle Emission Measurements.	56

ACKNOWLEDGEMENTS

A special thanks to Thomas Bejma, Project Officer, John T. White, and Tom Tupaj for providing counsel, technical guidance, and understanding throughout the program.

Section 1

INTRODUCTION

One of the provisions of the Clean Air Act passed by Congress in 1963 and Clean Air Act Amendments of 1970, was the control of exhaust emissions from new motor vehicles. Administrative responsibility for setting and enforcing emission standards resides in the Environmental Protection Agency (EPA). Other provisions of the Clean Air Act require states and municipalities to establish air quality implementation plans including vehicle inspection and maintenance programs.

In order to provide states, municipalities and other agencies with data relative to the contribution of automobiles to emission inventories, the EPA initiated work to characterize the emissions of in-use light-duty vehicles in selected regions throughout the country. These data are forwarded to the Emission Factor Unit of the National Air Data Branch (NADB) and the Office of Transportation Land Use Policy (OTLUP) for their use in calculating and projecting nationwide and metropolitan area motor-vehicle emission factors for light-duty vehicles. These average emission factors are also used in assessing the degree to which in-use vehicles comply with applicable standards, developing emissions and transportation control strategies, and forecasting ambient air quality.

The FY71 Program, the EPA's first major surveillance program using the CVS technique, measured exhaust emissions from 1957 to 1971 light-duty vehicles. Similar work on 1966 to 1972 model-year vehicles was completed in the FY72 program. The FY73 and FY74 programs were initiated to study emissions from 1966 to 1974 and 1975 light-duty vehicles, respectively. The FY75 program was initiated to update the emission factors on 1965 to 1976 light-duty vehicles and trucks.

This report describes the program conducted by Olson Laboratories, Inc., in three metropolitan areas; Los Angeles, St. Louis and Washington, D.C.

Section 2

TECHNICAL DISCUSSION

2.1 PROGRAM OBJECTIVES

The primary objectives of the emission factor program are to provide updated light-duty vehicle emission data for use in analyzing various mobile source control strategies, to assess the impact of mobile sources with advanced emission systems on air quality and to provide data to assess the effectiveness of inspection/maintenance programs in reducing mobile source contributions to air quality.

The objective of the Olson contract in the three metropolitan areas was to collect exhaust emission data for the national mobile source data bank.

2.2 PROGRAM DESIGN

The program was designed to obtain basic exhaust emission data using the Federal Test Procedure (FTP) for all vehicles. The program was also designed to obtain certain other data in each location as described below.

The 506 vehicles tested in St. Louis were also subjected to a series of five short tests. These short tests included the Clayton Key-Mode Test, the New York/New Jersey ACID Test, the Two-Speed Idle Test, the Federal Short-Cycle Test and the Federal Three-Mode Test. Additionally, 34 1976 light-duty vehicles were also subjected to Highway Fuel Economy Tests (HFET), 156 vehicles were subjected to modal and steady-state tests, and 82 vehicles were subjected to sulfate tests. Ten light-duty trucks received the same series of short tests along with modal tests and the HFET.

A total of 200 vehicles were tested in the Los Angeles area. Of those vehicles, 34 1976 light-duty vehicles and 10 light-duty trucks received the Highway Fuel Economy tests. All vehicles received FTP and modal and steady-state tests.

A total of 133 vehicles were tested in Washington, D.C. Of these vehicles, 34 light-duty vehicles received the HFET. Seventeen light-duty trucks were tested, of which ten received the HFET and the modal tests. All vehicles received the 1975 FTP.

Other elements in the design of the program were structured to obtain specific data concerning each individual vehicle's configuration and condition, quality control of test procedures, data reduction and vehicle procurement. These elements are described in detail in following sections of this report.

2.3 TEST VEHICLE PROCUREMENT

The EPA provided a test vehicle listing for each test site which included model-year, make, displacement, vehicle size, transmission type and number of carburetor venturis. The listing defined by vehicle number all of the above descriptors, precisely defining which vehicles should be tested. Vehicles were selected by the EPA on a vehicle miles traveled basis between model-years and sales weighted within each model-year. The list also identified which vehicles should be tested with an additional 10 percent road-load horsepower to simulate air conditioning.

The contract also required that test vehicles be obtained not more than 15 miles (25 km) outside the city limits of the specified city. Other requirements applicable to test vehicle procurement were as follows:

- 100 percent of sample to be the listed make and model-year.
- 90 percent of sample to be the listed make, model-year and engine displacement.
- 70 percent of sample to be an exact match to the EPA-supplied vehicle list.

In addition, for any one model-year, the use of rental or leased vehicles was limited to 10 percent of the vehicles to be tested at each location. For any one model-year, the number of vehicles procured from members of civic, fraternal or religious organizations was limited to 50 percent of those vehicles to be tested in each test location. In practice, however, Olson did not utilize vehicles obtained from organizations. Groups of test vehicles were not obtained from automotively-oriented organizations; e.g., sportscar clubs.

2.3.1 Test Vehicle Selection

The fleet of test vehicles was procured primarily by obtaining registration lists and making direct mailings to prospective test vehicle owners, and by contacting participants of previous programs. A few rental vehicles were also used. The direct mailing included a description of the program, program incentives and a postage-paid return card for those owners who desired to participate. The cards were designed so that vehicle identification information, such as engine size, transmission type, etc., could be filled in by the vehicle owner. Upon receipt of returned cards, this information was used in the selection of test vehicles in accordance with the match requirements. Owners of suitable vehicles were then contacted by telephone and scheduled for test.

In St. Louis, because of State law, vehicle registration lists were not available. The methods for obtaining vehicles in St. Louis were the use of television, radio, newspaper ads, write-ups in local company papers and posters placed in cooperative business establishments. Thus, the majority of vehicles were obtained from volunteers who called the facility. Some of the same techniques were used in obtaining 1975 and 1976 vehicles in the Los Angeles and Washington, D.C. areas.

2.3.2 Incentives

The incentives permitted by the contract were a $50.00 savings bond, a full tank of fuel when returned to the owner and the use of a late-model, fully-insured loan vehicle during the time the test vehicle was in the possession of the laboratory. These incentives were used for all privately-owned vehicles. In the case of the few rental vehicles allowed by the contract, no incentives other than normal rental costs were given.

2.3.3 Test Vehicle Handling

A file containing the owner and vehicle information was established and utilized to schedule vehicles for testing. Owners were contacted by telephone. At this time, information submitted on the data card was confirmed and any missing information was obtained. Vehicles which met with program design requirements, or approved substitute vehicles, were then scheduled for testing.

Upon delivery at the test site, each vehicle was initially inspected to confirm compliance with sample requirements. In a few cases, vehicles were rejected at this point because of improper engine or carburetor identification by the owners. In other situations, vehicles were rejected for exhaust system leakage or safety reasons. After preliminary inspections indicated a vehicle to be acceptable, loan vehicle agreement forms were completed, an EPA-designed questionnaire on vehicle use and maintenance was filled out by the owner and checked for completeness. The vehicle was then placed on the test schedule board, which established the pre-test operations to be performed and the vehicle test time slot.

2.4 FACILITIES AND EQUIPMENT

2.4.1 Test Locations

Olson Laboratories, Inc., operates a permanent facility in the Los Angeles metropolitan area. Testing for this contract was performed in this facility. A semi-permanent facility was established in the St. Louis area using a mobile laboratory. A temporary location was set up in Washington, D.C. using the St. Louis personnel and equipment. The location of the three facilities are listed below:

Los Angeles Area

421 East Cerritos Avenue
Anaheim, California 92805

St. Louis Area

5511 Phantom Drive
Hazelwood, Missouri 63042

Washington, D.C. Area

4805 Frolich Lane
Tuxedo, Maryland 20781

The Los Angeles facility contained approximately 26,000 square feet of laboratory/office space. The St. Louis facility contained approximately 11,000 square feet of laboratory/office space. The Washington, D.C. facility contained approximately 10,000 square feet. Both the Los Angeles and St. Louis/Washington, D.C., facilities provided one emission test cell.

2.4.2 Constant Volume Samplers

Two Olson six-bag CVS systems with gas-to-water heat exchangers were used. Sample and background bag selection was automatically controlled by computer to select the proper bag set for each phase of the 1975 FTP, high-speed and low-speed driving cycles. The computer also selected the bag set for the surveillance driving cycle, highway fuel economy cycle, and the short cycles.

2.4.3 Emission Analysis Consoles

Two complete emission analysis consoles were designed and built by Olson. Each console has push-button selection of zero, span and sample for each range of each instrument. The consoles have built-in CL converter efficiency test units and automatic sample line purge as required by the contract. The consoles are essentially identical, in that each console contains the same instrument types and models as shown below:

Analyzer	Ranges
Bendix Model 8501-5C (CO)	0-100, 0-500ppm
Beckman 315B NDIR (CO)	0-.3%, 0-3%, 0-5%
Beckman 315B NDIR (CO_2)	0-4%, 0-8%
Teco 10A Chemiluminescent (NO_x)	0-100, 0-250, 0-1,000, 0-2,500ppm
Two Beckman 400 FID (HC)	0-50, 0-100 0-300, 0-1,000 0-3,000, 0-10,000ppm
Horiba GSM 300 (Raw HC)	0-400, 0-2,000ppm Hexane Equivalent
(Raw CO)	0-2%, 0-10%
Horiba MEXA 300A (Raw HC)	0-200, 0-1,000ppm Hexane Equivalent
(Raw CO)	0-0.5%, 0-5%

2.4.4 Laboratory Standard Calibration Gases

Laboratory standard calibration gases were either sent to the EPA where concentrations were assigned to them or they were directly traceable to NBS prime standards. Each laboratory used the standard set of gases for defining instrument calibration curves and assigning concentration values for the working gases. Each cylinder of standard gas and each working gas was equipped with a dedicated pressure regulator as specified by the contract. All gases were permanently plumbed to a quick-disconnect panel for ease in selecting the gas desired during calibration and testing.

2.4.5 Chassis Dynamometer

Each facility had a Clayton ECE-50 direct-drive variable inertia dynamometer permanently mounted in the floor. Each dynamometer met the requirements of the contract to have 250-pound increments and 500-pound increments in the required inertia ranges. The ECE-50 had 17-1/4-inch roll spacing and 8-5/8-inch diameter rolls in compliance with the contract.

2.4.6 Sealed Housing For Evaporative Determination (SHED)

A Horiba Instruments' model EPS-76 Sealed Housing for Evaporative Determination (SHED) was installed at the Los Angeles facility. This SHED consisted of hydraulically operated door, purge and circulating fans, and probes for hydrocarbon and temperature measurements.

2.4.7 Sulfate Tunnel

An exhaust dilution tunnel with particulate sampling probe was constructed at the St. Louis facility according to the specifications of Enclosure 6 of the contract. Pumps, probe diameter, and flow meters were selected so as to provide isokinetic flow at about 1 CFM. Millipore "Fluoropore" 47 mm diameter filters were used to collect the sulfate samples. A dry gas meter was used to measure total flow through the probe.

2.4.8 Miscellaneous Equipment

Miscellaneous equipment used in conjunction with the major items of equipment included the following:

- Two Texas Instrument Servowriter II Recorders were used with each analytical console at each location.
- One Hewlett-Packard 2114A Mini Computer was used to generate all driver traces at each location.
- One Hewlett-Packard Model 7128-A-02-04-08-24-105-141-144 Driver's Aid at each location.
- One Teco Model 100 NO_x Generator at each location.
- One Sargeant Welch Continuous Flow Psychrometer, Model No. 542610 with continuous recording of wet/dry bulb temperatures by a dual-channel Rustrac Recorder Model No. 2163E at each location.

- Hartzell Model No. N-24-DUW cooling fan placed in front of the vehicle for cooling during testing at each location.

- One Taylor Instrument Company Model No. 2314, 7-day continuous recording barometer at each location.

- One Autoscan Model No. 4000 Engine Analyzer at each location.

- One Rustrac Model No. 2163B continuous recording temperature recorder for soak area temperature at each location.

- One Nova Mercurial Barometer (California location).

- One Meriam 50 MC2-4(F) Laminar Flow Element for CVS calibration (California location).

- One Meriam 50 MC-2-65F Laminar Flow Element at St. Louis.

- One Mettler Model 1200 Balance used for weighing the propane cylinders for propane recovery tests at each location.

- One Strobotach for dynamometer coastdown calibrations at each location.

- Additional fans for catalyst and rear wheel cooling were Hartzell Model No. N-24-DUW, and Dayton Models 2C-631 and 6K-230.

- One Hewlett-Packard Model 9821A Programmable Calculator with a Model 9864A Digitizer was used to calculate the integrated concentrations of each mode of the surveillance driving cycle from continuous strip chart records of the analyzer output during the test cycle.

- Wet/dry Bulb Recording Systems - Periodic checks using a sling psychrometer as a reference were made to verify calibration and accuracy.

- Miscellaneous Recorders - Other recorders were periodically checked for mechanical zero, Rustrac Recorders were checked against precision thermometers.

- Other auxiliary equipment was calibrated in accordance with manufacturer's procedures.

- One Altex Model 400 Liquid Chromatograph was used for sulfate determinations.

2.5 EQUIPMENT QUALIFICATION, CALIBRATION, AND CROSS-CHECK

This section describes the qualification, calibration, and cross-check procedures utilized by Olson and verified by the EPA technical personnel to provide continuous verification that valid test data were generated throughout the time frame of the test program. Initial qualification included complete

demonstration of individual instrument calibration, stability, response time, modal transport time, zero air and nitrogen purity, CVS calibration, dynamometer calibration, and inspection of all daily, weekly and monthly log records.

Prior to the initial EPA inspection, Olson performed a qualification checkout which was defined in an eight-page Emission Laboratory Evaluation Criteria Document. The completed document and all related data were submitted to the EPA Project Officer. After review of the Olson qualification documentation, the Project Officer witnessed a verification of the qualification procedures prior to initiation of testing.

2.5.1 Constant Volume Sampler (CVS)

Each of Olson's CVS units were calibrated with the laminar flow elements (see Section 2.4.8) by the basic procedures specified in the Federal Register. A copy of the calibration data was provided to the EPA Project Officer as a part of the qualification data package. Propane recovery tests were made after the calibration to confirm proper calibration. Propane recovery tests were also made each day of testing to confirm continued calibration of the CVS system. The measured propane mass recovered by the CVS had to be within ±2.0 percent of the injected mass as determined gravimetrically.

2.5.2 Emission Analysis Console

Calibration and qualification of the emission analysis console was performed as stipulated in the Federal Register and the Emission Laboratory Evaluation Criteria. A summary of the daily qualification checks which were made is as follows:

- Leak check of each instrument as well as the system.
- Zero, gain, tune as applicable to each instrument.
- Hang-up and leak checks for background and sample bags and sample line.
- Dilution air HC/CO concentration.
- Chemiluminescence vacuum, bag concentration with known concentration input, converter efficiency.
- FID fuel, air, sample pressures.
- Propane recovery test result.
- Working gas log, cylinder number, concentration, deflections, cylinder pressure.

In addition to the above daily checks, weekly checks were:

- Calibration check of each range of each instrument.
- CO instrument response to wet CO_2.

Appropriate calibrations, leak checks, etc., were also made whenever maintenance was performed which could change instrument or system operation.

2.5.3 Chassis Dynamometer

The Clayton ECE-50 dynamometers were initially calibrated by a Clayton representative using manufacturer's equipment and procedures to calibrate the speed and horsepower meters. Coast-down techniques specified in the Federal Register were used to develop actual versus indicated horsepower curves for each inertia weight setting (1,750 through 5,500). Special coast-down calibrations were performed in St. Louis at 30 mph and 50 mph for the Federal Three-Mode Test. The calibration curves of the dynamometer were confirmed monthly or after any maintenance which might affect the curves. The speed meter was also checked using a strobotach on the dynamometer rolls during the monthly coast-down checks. A log of all maintenance and calibration actions was maintained throughout the program.

2.5.4 Sealed Housing For Evaporative Determination (SHED)

The SHED was initially checked out by performing a leak down test over a 4-hour period. This check was repeated during the testing period as part of the monthly calibration check. The FID calibration curves were checked weekly along those of with the exhaust emission analysis consoles.

2.5.5 Sulfate Determination

Sulfate samples were analyzed by the EPA manual Barium Chloranilate method. The precision of this analysis was verified by performing a ±5 percent recovery of a gravimetrically determined test sample. The sulfate samples were also validated by two correlation vehicles supplied by EPA.

2.6 TEST PROCEDURES

2.6.1 Vehicle Preparation

All vehicles tested in this program were inspected upon receipt from the owner for the following:

- Those items required to determine the match requirements such as make, model-year, transmission type, engine size, number of carburetor venturis, air conditioning and certain emission controls.
- A physical inspection of the vehicle's interior and exterior for damage when received.
- An inspection to verify the vehicle was safe for operation and the exhaust system was not leaking or could be readily repaired.

Following the vehicle inspection, the owner completed the questionnaire specified by the EPA, other documentation and the agreement for loan vehicle usage, bond application, etc.

After completion of the sulfate test, if performed, fuel was drained and the tank was filled to 40 percent volume with test fuel. Indolene 30 was used for all noncatalyst vehicles and Indolene Clear was used for all catalyst-equipped vehicles. After the vehicle was filled with test fuel, it was scheduled for a 10-minute preconditioning drive over a street route prior to being placed into pretest soak. The soak period was a minimum of 12 hours and a maximum of 20 hours from key-off to key-on. In practice, at both facilities, the goal was to maintain the temperature of the soak area between 68°F and 86°F at all times. A continuous record of the soak area temperature was maintained 24 hours per day to verify that the soak temperature limits applicable to each vehicle were met. Vehicles for which the soak temperature limits were violated were given another 10-minute preconditioning drive and placed back into soak.

2.6.2 Equipment Preparation

Emission test equipment was checked daily prior to the performance of emission tests. The analysis system was checked for leaks, zero and gain settings when appropriate for each instrument, CVS inlet and outlet pressures as well as Delta P. Additional checks included background and sample bag leak checks and hydrocarbon hang-up, converter efficiency and CVS calibration by propane recovery tests. In addition, the driver's aid and computer-generated driving trace were calibrated prior to and checked after each test. The dynamometer was warmed up using a nontest vehicle if it had not been used in the previous 2-hour period. During this warm-up period, the dynamometer speed indicator was checked against the driver's trace to ensure that both speed indications were identical.

The continuous wet/dry bulb system was checked on a periodic basis against a sling psychrometer to verify proper calibration.

The emission analysis console was left in the operating mode. All instruments were placed in the sample mode position with continuous purge of filtered background air. Thus, the instrument console was at all times warmed up and ready for calibration and test. In the event that instrument maintenance required instrument shut off, a warm-up time of a minimum of 1 hour was used. In practice, the warm-up time was in excess of 1 hour since calibration checks were routinely performed after maintenance.

The CVS was normally not turned off during nontest hours. The blower was left in speed #1 and the temperature controller was normally left on. Prior to the propane recovery test, the CVS was used to exhaust the nontest vehicle used for dynamometer warm-up, and was thus at operating temperature for the propane recovery test and subsequent emission tests.

2.6.3 Sulfate Emission Test Procedure

Sulfate Emission Tests (SETs) were performed in accordance with Enclosure 6 of the Contract. Owners of vehicles requiring the SET were asked to add sufficient fuel far enough in advance of delivering their vehicle so that at least 100 miles of operation was on the tank fuel. Furthermore, these owners were also requested to deliver their vehicles to the test site with approximately one-half tank of fuel.

Upon delivery, the vehicle was preconditioned, using the as-received fuel, on the first 505 seconds of the LA-4 cycle. The vehicle then idled for 2± 0.5 minutes with one additional 5,300 cfm fan placed at the side of the vehicle opposite the tail pipe. At the end of this idle, the vehicle was subjected to the Congested Freeway Driving Schedule (CFDS). A CVS bag sample was used to gather the dilute exhaust for the purpose of emission and fuel economy calculations. Two filter samples for sulfate emissions were taken using the dilution tunnel illustrated in Figure 1.

The filters were ammoniated and then placed in polypropylene bottles and mailed to Olson's Anaheim laboratory where they were analyzed using the BCA method.

2.6.4 Federal Exhaust Emission Test Procedure

All vehicles received one 1975 FTP performed in accordance with the requirements and procedures specified in Sections 85.076-14 through 85.075-24 of Federal Register Vol. 37, No. 221, November 15, 1975, 38 Federal Register 124, 38 Federal Register 209, 39 Federal Register 101 and EPA Guidelines defined by contract. The sample collection for each set of bags was controlled by the computer. At the completion of the test, the computer printed out crank time and total test time for the cold start and hot start portions of the test.

2.6.5 Evaporative Emission Test Procedure

Evaporative emissions were performed on 20 vehicles in Los Angeles in accordance with Enclosure 5 of the Contract. Each vehicle was tested twice, once using test fuel (Indolene Clear) and once using a single batch of commercial unleaded. Fuel temperatures during the diurnal heat build and the hot soak portions of each test were measured using Type J thermocouples inserted through the fuel cap. The detailed test procedures used were specified in Recommended Practice for Determination of Evaporative Emissions from Light-Duty Vehicles dated April 1976.

2.6.6 Highway Fuel Economy Test Procedure

The EPA HFET was performed on ten light-duty trucks and 34 passenger vehicles in each city. The tests were run in accordance with the contract requirements stated in Enclosure 1 of the Contract.

Starting with each vehicle in a warmed-up condition (at least 7.5 miles of cyclic operation having occurred within the previous 35 minutes), each vehicle was operated on the dynamometer at 50-mph for a period of 3 minutes. Within 1 minute of the end of the 50-mph cruise period, the vehicle commenced operation over the 10.2 mile, 765-second driving schedule. A CVS bag sample was used to gather the dilute exhaust for the purpose of emission and fuel economy calculations. The engine was already running at the beginning of the sampling period. The tolerances for this driving schedule were identical to those used for the FTP.

2.6.7 Modal Exhaust Emission Test Procedure

The modal exhaust emission tests were conducted on the same 10 light-duty trucks and 34 light-duty vehicles which received HFETs. Measurement of

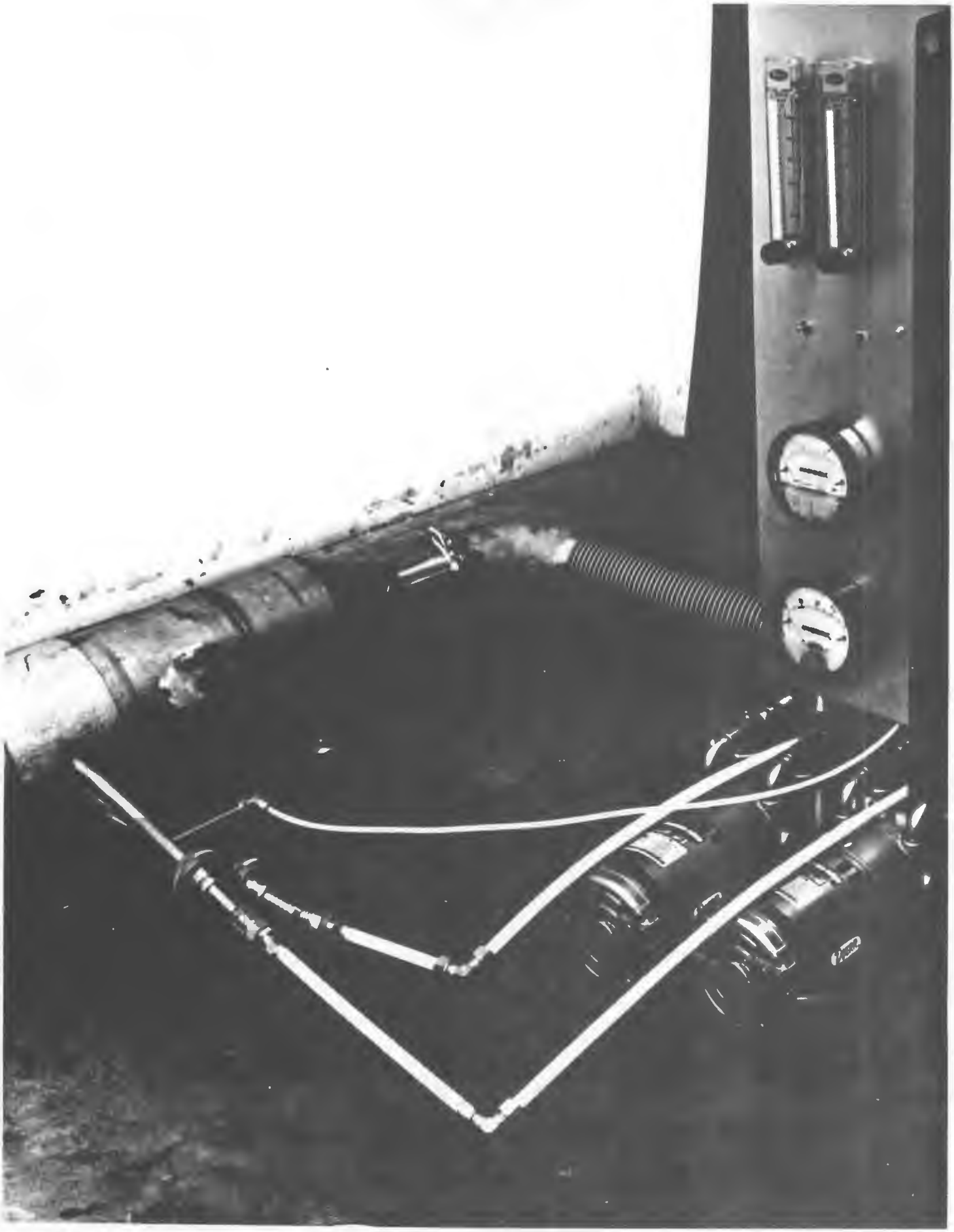

Figure 1. DILUTION TUNNEL

the modal exhaust emissions followed the HFETs. Modal tests consisted of two separate tests; steady-state modes and the Surveillance Driving Sequence. The modal tests were performed in accordance with Enclosure 2 of the Contract.

Each test was preceded by a soak period no longer than 20 minutes from the last sustained vehicle operation. At the end of the soak period, the vehicle was operated on a chassis dynamometer at 50 mph for a period of 3 minutes. During this time, the dynamometer speed and horsepower settings were checked and adjusted if necessary. Within 1 minute after the end of the 50-mph cruise period, the vehicle was returned to idle and the test begun.

Steady-state exhaust emissions were measured using the CVS dilute bag collection technique in the same manner as in the FTP. Measurements were taken at each speed successively from idle (0 mph) through 5, 10, 15, 30, 45 and 60 mph. The exhaust emissions were continuously monitored and recorded on a strip chart recorder. For continuous sampling, the analytical system was equipped with sample bypass to decrease delay time. Delay time from engine to all analyzer outputs was less than 10 seconds. At each speed, equilibrium of speed and all analyzer traces was maintained for at least 30 seconds before sampling was started. A minimum sample volume of 2 cubic feet and a minimum sample time of 3 minutes were required. Recorder chart speed was 3 inches per minute.

The Surveillance Driving Sequence portion of the modal test was started within 20 minutes after the end of the steady-state tests.

After the soak and 3-minute 50-mph cruise, the vehicle was operated at idle for 1 minute before the Surveillance Driving Sequence began. No sampling was done during the first 30 seconds. For the remainder of the minute, dilute exhaust was directed through the sampling and analytical system. This dilute sample from the CVS was continuously recorded on strip chart recorders while the vehicle was driven through the driving sequence on the chassis dynamometer. At the start of the Surveillance Driving Sequence, CVS dilute bag sampling was begun.

The Surveillance Driving Sequence consisted of 32 acceleration and deceleration modes and 33 constant speed modes. These modes were combined into a 1,054-second driving sequence. Vehicle operation and CVS bag and continuous sampling continued to the end of the schedule, at which point bag sampling was terminated. Continuous sampling was maintained with the engine at idle for an additional 10 seconds.

Immediately upon completion of the test, with the sample pumps and recorders running, the sample line from the probe was purged with air to establish the hydrocarbon "hang-up" levels. The allowable hang-up level for a valid test was 5 percent of full-scale maximum within 10 seconds and 3 percent of full-scale within 3 minutes after completion of sampling. An additional requirement for a valid test was that the span and zero points on all emission analyzers be within ±2 percent of full-scale from test pre-calibration to test post-calibration. The bag samples were compared to the integrated continuous traces. The integrated continuous results had to agree within ±10 percent of the bag results to be considered valid.

2.6.8 Federal Short-Cycle Test Procedure

The Federal Short Cycle, 125 seconds in duration and .7536 mile in length, consisted of the following nine modes:

MODE	TIME IN MODE
0-16 mph	6
16-29 mph	23
29 mph cruise	10
29-37 mph	18
37-42 mph	4.5
42-37 mph	2.5
37-20 mph	32
20-9 mph	7.5
idle	21.5
Total Seconds	= 125.0

The dynamometer loadings and transmission shift points followed the procedures as required for the FTP. Mass emissions and fuel economy were calculated in the same manner as for the HFET.

2.6.9 New York/New Jersey Acid Test Procedure

This cycle, 75 seconds in duration and .2792 mile in length, consisted of six modes as follows:

MODE	TIME IN MODE
Idle	22
0-30 mph	15
30 mph cruise	15
30-10 mph	12
10 mph cruise	7
10-0 mph	4
Total Seconds	= 75

All vehicles were tested at an inertia weight of 3,000 pounds and 3.5 indicated hp at 30 mph. Transmission shift points for manual transmissions occurred at the same speeds as on the FTP. A minimum of 2 cubic feet in the sample bag was collected. Mass emissions and fuel economy were calculated in the same manner as for the HFET.

2.6.10 Clayton Key-Mode Emission Test Procedure

This short test consists of three steady-state operating conditions during which undiluted exhaust samples were taken using a Horiba GSM 300 exhaust analyzer.

Clayton key-mode tests were preceeded by a soak period no longer than 20 minutes from the last sustained period of vehicle operation. At the end of the soak period, the vehicle was operated for a maximum of 3 minutes at

the Clayton key-mode specified speed with the hood open and the cooling fan on. The inertia weight was the same as for the Federal tests. During this stabilization period, the specified dynamometer load horsepower was set. The test was performed in the order of high cruise, low cruise and idle. At each speed, equilibrium of vehicle speed and the CO and HC analyzer meters was maintained for 30 seconds before the readings were recorded in percent CO and ppm/Hexane, respectively.

Class of Vehicle by Weight (NADA)	Transmission Range/ Gear	Meter Dyno. Load hp @ mph	High Speed Cruise (mph)	Low Speed Cruise (mph)	Idle
2000 to 2774 lb	Drive or Third Gear	15 @ 38	36 to 38	22 to 25	Manual Transmission in neutral
2775 to 3774 lb	Drive or High Gear	24 @ 46	44 to 46	29 to 32	
3775 lb and up	Drive or High Gear	30 @ 50	48 to 50	32 to 35	Automatic Transmission in Drive

2.6.11 Two-Speed Idle Test Procedure

This short test consisted of volumetric sampling of undiluted exhaust emissions during two steady operating conditions with the hood open and the cooling fan turned on. The first operating mode was at 2,250 engine rpm, and the second at normal idle. For both modes the transmission was in neutral.

Two-Speed idle tests were preceeded by a soak period no longer than 20 minutes from the last sustained period of vehicle operation. The vehicle was then operated for a maximum of 3 minutes at 2,250 rpm and then for a maximum of 3 minutes at idle. CO, HC and NO_x were reported in percent CO, ppm Hexane and ppm NO_x, respectively.

2.6.12 Federal Three-Mode Test Procedure

This short test consisted of three steady-state operating modes (similar to Clayton key-modes) with the dynamometer loads simulating the average power which occurs at the appropriate speed on the FTP, and with all light-duty vehicles being grouped into four weight classes. Emissions were measured by the volumetric procedure for each mode.

Vehicle Weight Class	Transmission Range	High Speed Mode Speed mph	High Speed Mode Load ahp	Low Speed Mode Speed mph	Low Speed Mode Load ahp	Idle Mode
Up to 2500 lb.	In lower gear for 30 mph test (3rd gear)	50	21	30	9	Automatic Transmission in Neutral

Vehicle Weight Class	Trans-mission Range	High Speed Mode Speed mph	High Speed Mode Load ahp	Low Speed Mode Speed mph	Low Speed Mode Load ahp	Idle Mode
2501 to 3500 lb.	Drive or high gear	50	26	30	12	
3501 to 4500 lb.	Drive or high gear	50	31	30	15	
Above 4500 lb.	Drive or high gear	50	36	30	18	

2.6.13 Daily Test Schedule

The daily test schedules in the St. Louis and California laboratories were similar, in that multiple shifts were employed at both locations. In general, the night shift performed weekly and monthly calibrations on Sunday nights, and also performed the daily start-up checks including propane recovery tests on a daily basis. Vehicle preparation and preparation for return to the owner was performed on both shifts. Again, in general, the fuel draining and addition of test fuel was done on the day shift, but preconditioning was accomplished by both shifts in order to meet the 12- to 20-hour soak limit requirements. Flowcharts which show the test sequences are given in Figures 2 through 7.

2.7 DATA HANDLING

2.7.1 Data Collection

Olson developed keypunch-compatible forms for each test procedure required for this contract. Numerous other forms were developed and used for system quality control, working gas inventory control, etc. These forms included daily start-up checks and tests, working gas pressure log, weekly instrument calibration data forms, propane recovery data forms, NO_x converter efficiency checks, dynamometer coast-down data forms and equipment maintenance logs.

Olson used a packet of file folders for each vehicle tested. This system placed all data pertaining to any one vehicle in a single filing source to provide for rapid review of pertinent data, particularly for those vehicles which were subjected to multiple types of tests. Copies of pertinent data were retained in each test site with the original copy sent to Anaheim for processing. Each test packet contained the following:

1. Vehicle information sheet
2. Bond application card
3. Loan vehicle and test agreement forms
4. Owner questionnaire
5. Test data sheets for each type of test required
6. All raw test data such as analyzer recorder strip charts, temperature strip charts, driver's aid charts and all other raw test data applicable to each specific vehicle.

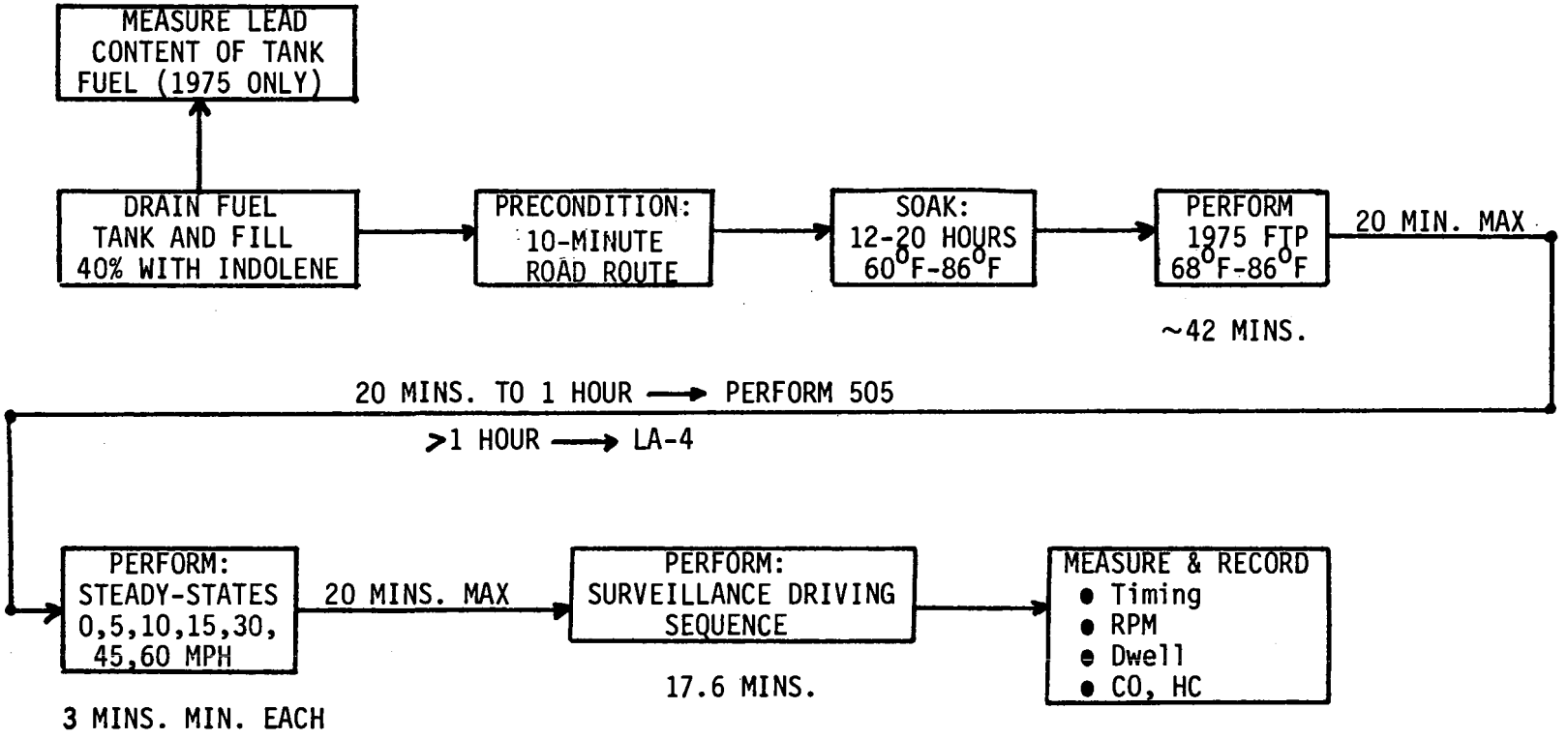

Figure 2. LOS ANGELES AND WASHINGTON BASIC TESTING SEQUENCE
(1975 FY Emission Factor Program)

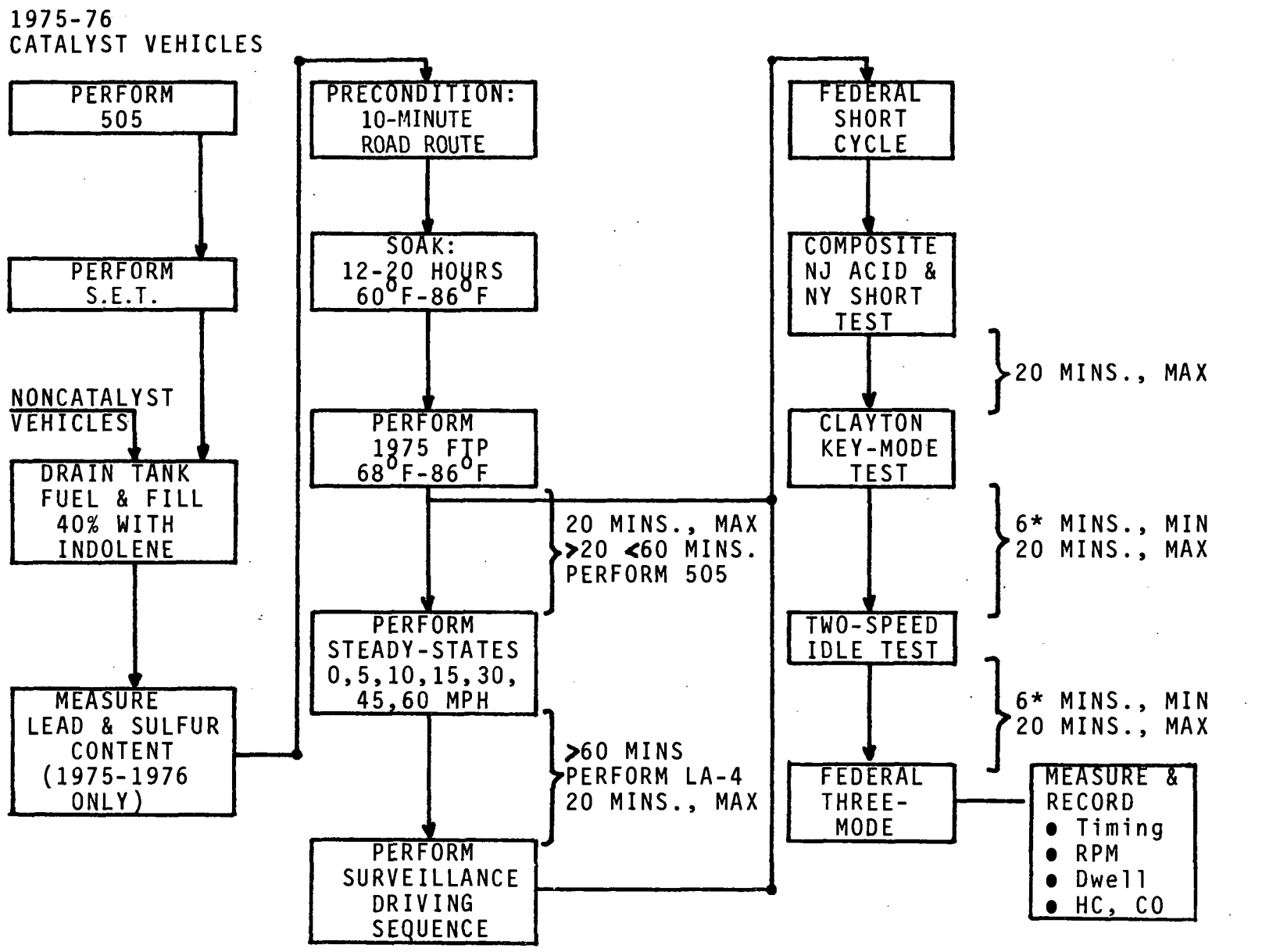

*NOTE: Not in contract

Figure 3. ST. LOUIS BASIC TESTING SEQUENCE
(1975 FY Emission Factor Program)

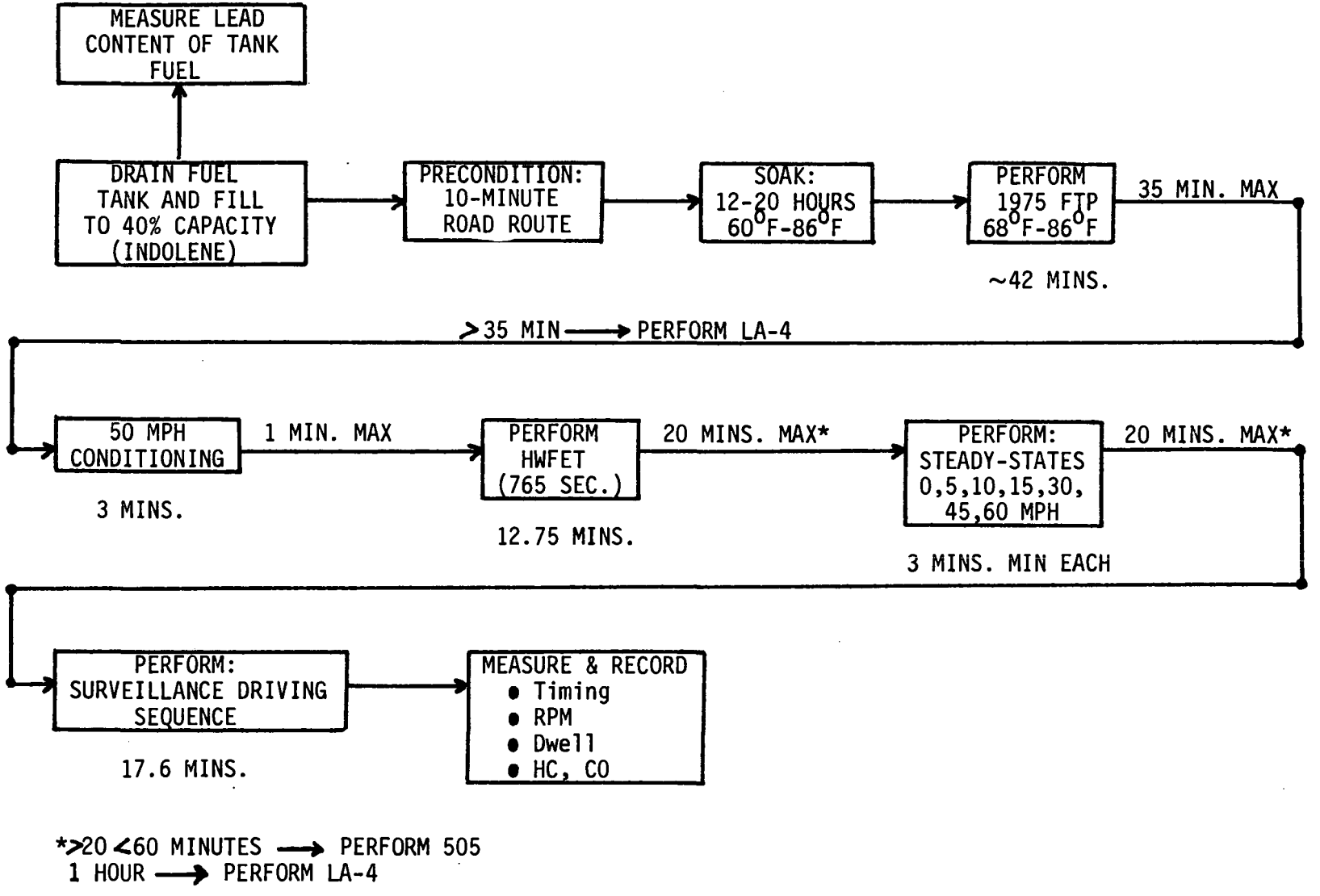

Figure 4. LOS ANGELES 1976 VEHICLES (24) WITHOUT EVAPORATIVE EMISSIONS (1975 FY Emission Factor Program)

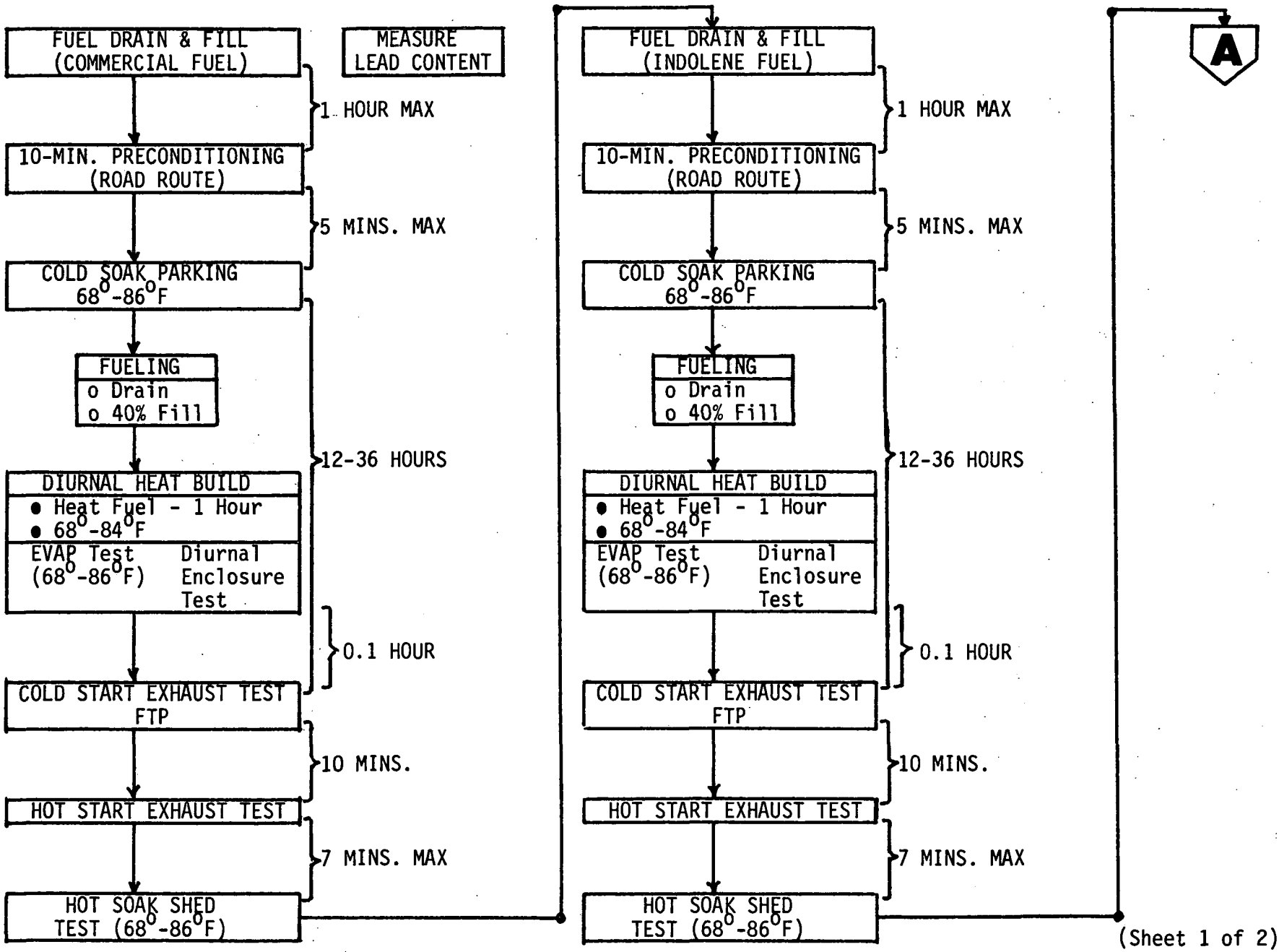

Figure 5. EVAP. TESTS ON 20 1976 VEHICLES IN LOS ANGELES* (1975 FY Emission Factor Program)

*NOTE: On two of the EVAP. vehicles, repeat EVAP. FTPs only. Only one HWFET & Modal required.

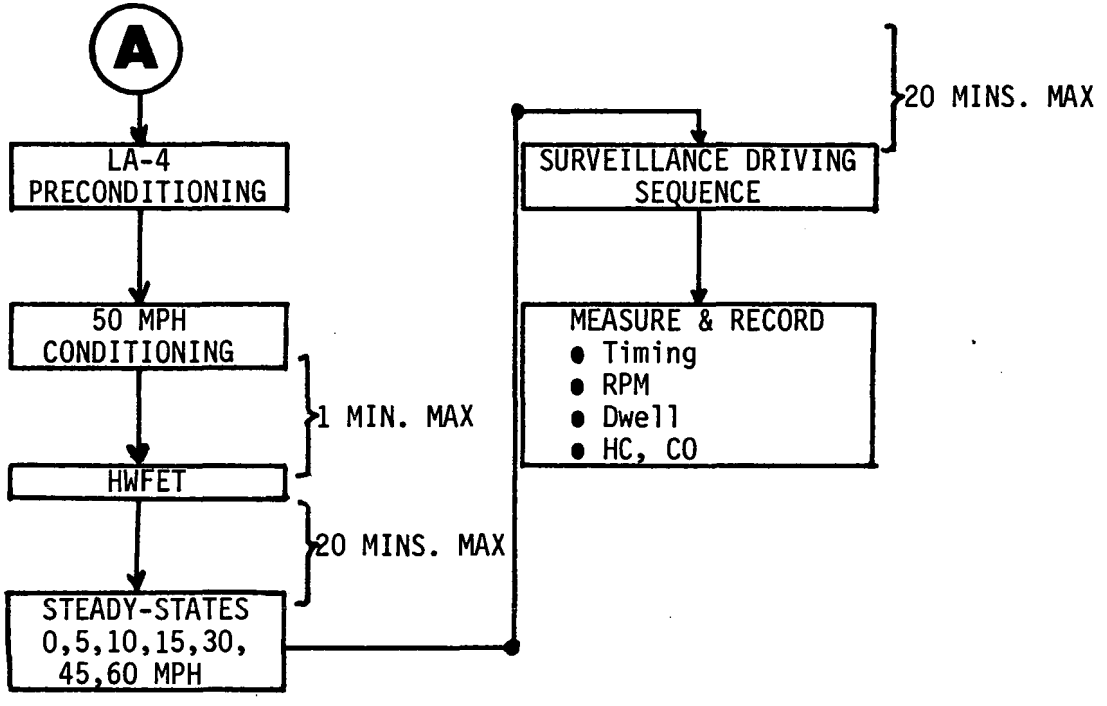

(Sheet 2 of 2)

Figure 5. EVAP. TESTS ON 20 1976 VEHICLES IN LOS ANGELES* (1975 FY Emission Factor Program) (Cont'd)

*NOTE: On two of the EVAP. vehicles, repeat EVAP. FTPs only. Only one HWFET & Modal required.

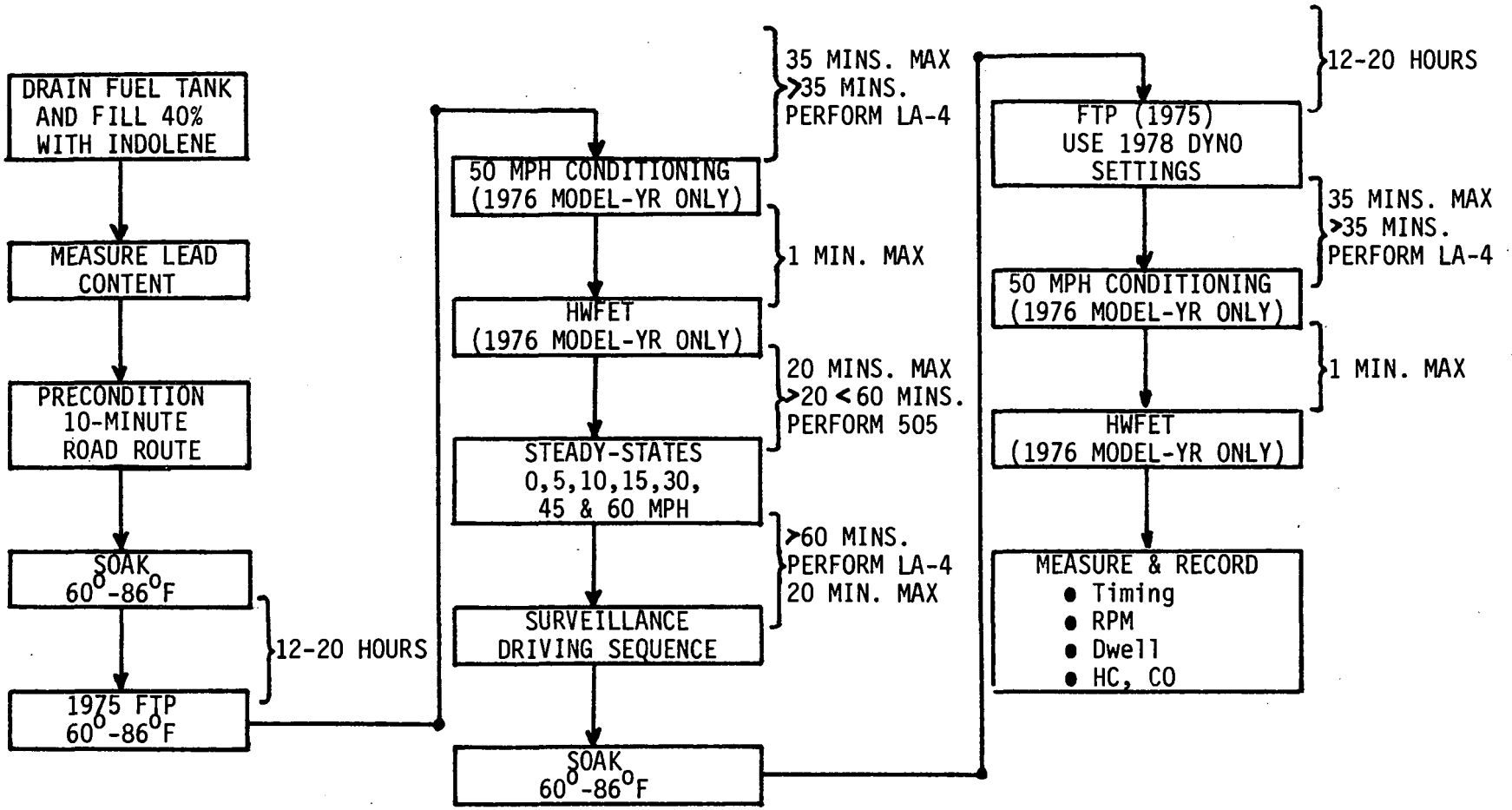

Figure 6. 17 1975/1976 LIGHT-DUTY TRUCK TESTING SEQUENCE (1975 FY Emission Factor Program)

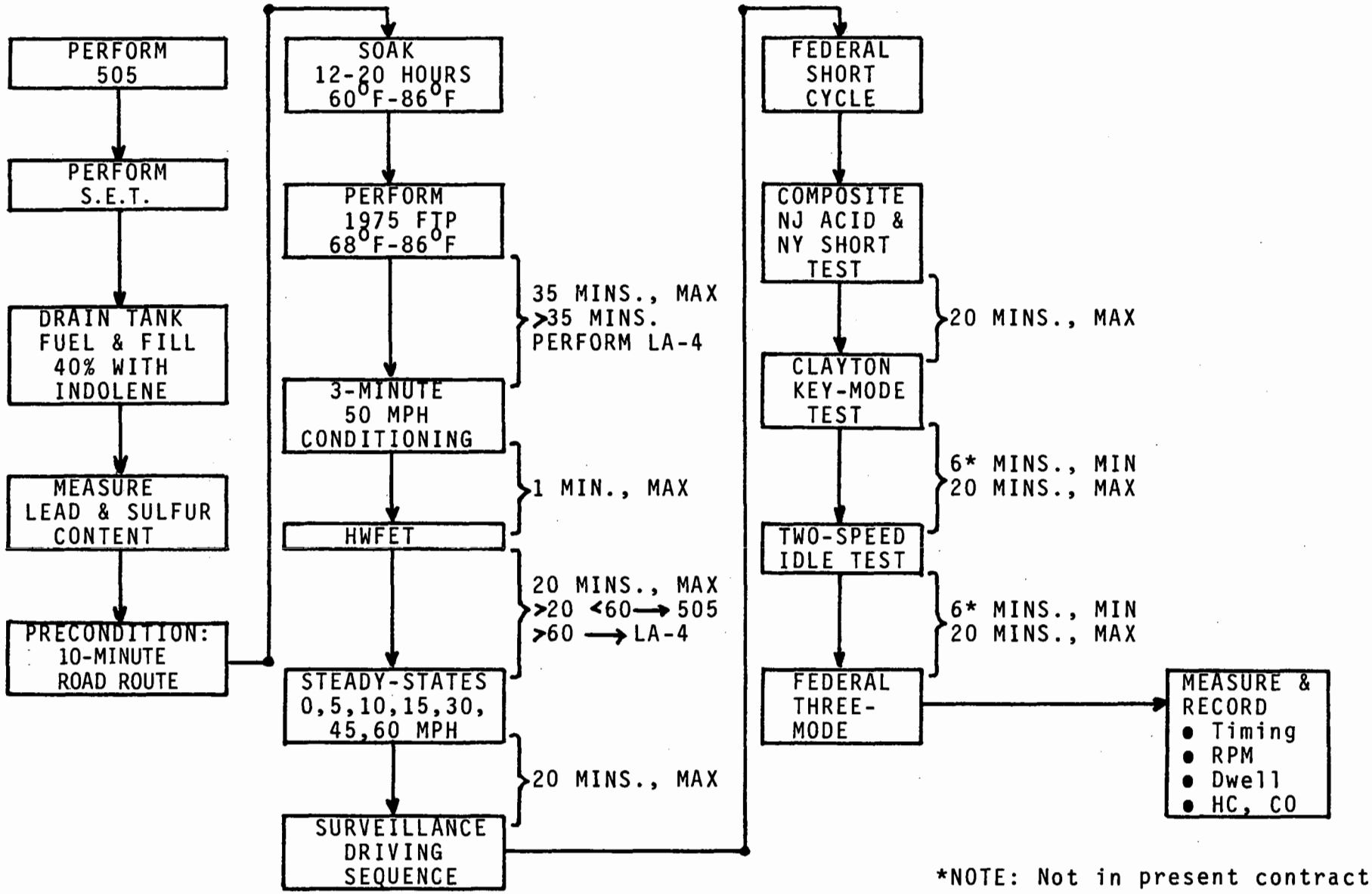

Figure 7. ST. LOUIS 44 VEHICLE (1976) TESTING SEQUENCE
(1975 FY Emission Factor Program)

2.7.2 Data Processing

Vehicle information, results of vehicle inspection and emission test data were turned over to the Quality Assurance section in Anaheim. The data required to be transmitted to the Project Officer or included in this final report were verified prior to keypunch for processing on either an IBM 360 computer or a CDC 6600 computer. All exhaust emission and fuel economy calculations were made on either an IBM 360 computer or a CDC 6600 computer. An intermediate step between final calculations was required for the modal test. The continuous dilute sample strip charts were integrated using a Hewlett-Packard 9821A desk-top computer and a 9864A digitizer to obtain the integrated concentration value for each of the acceleration/deceleration and steady-state modes. This data was then keypunched and processed to provide mode-by-mode emissions in grams per mile and fuel economy in miles per gallon.

2.7.3 Quality Control

Review of test data indicated that test errors generally were associated with mass emission testing. Predominant errors included driver trace violations, incorrect span points, and operating vehicles at incorrect dynamometer settings, (i.e., inertia weight, horsepower, or shift points).

Since Olson processed data off-line, keypunch errors also occurred, due in part to poor handwriting by the test personnel. A two-step audit procedure was implemented which consisted of listing the punched cards and reviewing the listed data for completeness and accuracy. After required corrections were made, the punched cards were computer processed to obtain mass emission data and correctly formatted output cards.

2.7.4 Calculation of Results

Mass emission test results were calculated off-line in accordance with procedures specified in the Federal Register and the contract.

2.7.4.1 Sulfate Emissions

Sulfate emissions were calculated in accordance with Enclosure 6 of Olson's 1975 FY Emission Factor Program Contract. These calculations included correction for fuel sulfur concentration determined by analysis of a fuel sample from each vehicle and conversion of sulfate to sulfuric acid emissions. Mass emissions were computed from the following equations:

$$CM_{H_2SO_4} = \frac{1.021Vmix}{D \times 10^3} \times \frac{S_c}{V_c} \times \frac{0.030}{WS}$$

Where:

$CM_{H_2SO_4}$ is the mass emissions of H_2SO_4 corrected to 0.030 weight percent sulfur in the fuel.

Vmix = total dilute exhaust volume in cubic feet per test corrected to standard conditions (528^oR and 760mm Hg).

$1.021 = MW_{H_2SO_4}/MW_{SO_4^=} = 98.08/96.06$

D = measured number of miles of CFDS (cycle distance is 13.5 miles but vehicle distance may be different).

10^3 = conversion from micrograms to milligrams.

S_c = mass of $SO_4^=$ in the filter sample as determined by analytical procedure, micrograms.

V_c = total volume of the filter sample, standard cubic feet.

$$Vc = \frac{Km \times Va \times (Pb + Pi) \times 528}{Ti \times 760}$$

and

Pb = Barometric pressure, mm Hg.

Pi = Pressure elevation above ambient measured at the inlet to the gas meter, mm Hg. For most gas meters with unrestricted discharge Pi is negligible and was assumed = 0.

Ti = average temperature of the sample at the inlet to the gas meter, R.

2.7.4.2 Exhaust Emissions (Federal Test Procedure)

Emission results were calculated for the 1975 FTP in accordance with the Federal Register including provisions for the dilution factor, humidity correction factor for NO_x, and separate barometer, wet bulb and dry bulb temperature data for each phase of the 1975 FTP. Fuel economy was calculated from the composite HC, CO, and CO_2 mass emission data using the carbon balance method.

2.7.4.3 Evaporative Emissions

Evaporative emissions were calculated in accordance with Enclosure 5 of the Contract. These emissions were based on the initial and final hydrocarbon concentrations, SHED temperatures, barometric pressure, and the geometry of the SHED. Evaporative emissions were reported for diurnal and hot soak phases of the evaporative test and for the composite (sum) in grams per test. Data were also reported at 10-minute intervals during each phase of the SHED test. Evaporative emissions were computed using the following equation for each phase:

$$M_{hc} = kV_n \times 10^{-4} \left[\frac{C_{hcf} P_{bf}}{T_f} \quad \frac{C_{hci} P_{bi}}{T_i} \right]$$

Where:

M_{hc} = hydrocarbon mass, g.

C_{hc} = hydrocarbon concentration as ppm carbon.

V_n = net enclosure volume, ft^3 as determined by subtracting 50 ft^3 (volume of vehicle with trunk and windows open) from the enclosure volume.

P_b = barometric pressure, in. Hg (kPa).

T = enclosure ambient temperature, R (k).

k = .208 (12 + H/C) for SI units, k = 1.2 (12 + H/C).

Where:

H/C = Hydrogen-carbon ratio.
= 2.33 for diurnal emissions.
= 2.2 for hot soak emissions.
i = indicates initial reading.
f = indicates final reading.

2.7.4.4 Highway Fuel Economy Test

Highway fuel economy was calculated using the carbon balance method and mass emissions measured during the 765 second, 10.2-mile highway fuel economy driving schedule. Mass emissions were computed from the following general equation:

$$M = V \frac{dc}{a}$$

Where:

M = mass in grams per mile
V = volume of exhaust sample in standard cubic feet (528°R and 760mm Hg)
d = density of pollutant in grams per cubic foot
c = concentration of pollutant in ppm or percent
a = cycle length in miles

2.7.4.5 Modal Emissions

The steady-state emission results were calculated in accordance with Federal Register basic procedures used for mass flow rate, sample bag concentration and distance traveled during bag sample collection. Emissions were calculated in grams/mile (grams/minute for idle mode conditions), and fuel economy was calculated in miles per gallon (gallons/minute) for idle mode conditions.

The Surveillance Driving Sequence (SDS) emissions were calculated two ways. The CVS bag results were calculated in accordance with standard CVS procedures using a distance traveled of 9.080 miles for the cycle. In addition, each mode of the surveillance driving cycle was calculated using integrated diluted concentration levels per individual mode and the miles traveled for each mode. This data was derived from the continuous strip chart recordings of each pollutant during the SDS cycle.

2.7.4.6 Federal Short-Cycle

The Federal Short-Cycle mass emissions and fuel economy were calculated in the same manner as for the Highway Fuel Economy Test, except that a driving distance of 0.7536 miles was used.

2.7.4.7 New York/New Jersey Composite Test

Mass emissions and fuel economy were calculated in the same manner as for the Highway Fuel Economy Test except that a driving distance of 0.2792 miles was used.

2.7.4.8 Clayton Key-Mode Emissions

Clayton Key-Mode Emissions were reported as raw concentrations of HC and NO_x in ppm and CO in percent. Hydrocarbon concentrations were reported in ppm Hexane.

2.7.4.9 Two-Speed Idle Test

The Two-Speed Idle Test results were reported in raw concentrations as ppm Hexane for HC, ppm for NO_x and percent for CO.

2.7.4.10 Federal Three-Mode Test

The emission results for the Federal Three-Mode Test were reported in raw concentrations as ppm Hexane for HC, ppm for NO_x and percent for CO.

Section 3

DISCUSSION OF TEST RESULTS

This section summarizes the test data obtained in the three locations in which Olson performed testing under the 1975 FY Emission Factor Program. Summary results are presented in this section. Listings of supporting data for Los Angeles, St. Louis, and Washington, D.C. are presented in the Appendices. Data for each test location are presented in separate tables identified by the name of the site.

Table 1 summarizes the make and model-year of the vehicles tested at each site. Table 2 summarizes the test vehicle characteristics by model-year and by test location.

3.1 FEDERAL TEST PROCEDURE EMISSIONS AND FUEL ECONOMY

Composite 1975 FTP emissions and fuel economy data are presented in Tables 3 through 7 for each test location. These tables contain the following data relative to emissions and fuel economy.

Table 3 - Exhaust Emission Test Results by Model Year for Passenger Cars.

Table 4 - Exhaust Emission Test Results for 1975 and 1976 Light-Duty Trucks.

Table 5 - Passenger Cars Meeting 1975/1976 Federal Standards.

Table 6 - 1975 and 1976 Light-Duty Trucks Meeting Federal Standards.

Table 7 - 1976 Passenger Cars Meeting 1976 Federal Standards.

Supporting data on test parameters during the 1975 FTP tests are presented in Appendix A. The results of the Owner's Questionnaire are presented in Appendices B and C for test vehicle use data and maintenance data, respectively. Appendix E presents detailed emission and fuel economy data for each phase and for the composite 1975 FTP by vehicle number.

3.2 MODAL EMISSIONS AND FUEL ECONOMY

Average modal emission and fuel economy data for all vehicles tested in each location are presented in Table 8. Table 8 shows the average calculated mass emissions and fuel economy for each of the individual modes of the surveillance driving schedule, the calculated composite, and the simultaneously collected bag composite. Table 8 also summarizes data for the seven steady-states performed as part of the modal tests. Supporting data are presented in the same format in Appendix H for individual vehicles.

TABLE 1

SUMMARY OF VEHICLE MAKES

CALIFORNIA

	1966, 1967, 1968	1969	1970	1971	1972	1973	1974	1975	1976	TOTAL
LIGHT-DUTY TRUCKS										
CHEVROLET	0	0	0	0	0	0	0	3	4	7
DODGE	0	0	0	0	0	0	0	1	2	3
FORD	0	0	0	0	0	0	0	3	3	6
GMC	0	0	0	0	0	0	0	0	0	0
FOREIGN	0	0	0	0	0	0	0	0	1	1
DOMESTICS										
AMC	0	0	1	0	1	1	1	1	1	6
BUICK	0	0	1	2	1	2	1	2	2	11
CADILLAC	0	0	0	0	1	1	1	1	1	5
CHEVROLET	0	0	5	5	6	5	6	5	7	39
CHRYSLER	0	0	0	1	0	0	1	1	0	3
DODGE	0	0	1	1	1	1	1	1	2	8
FORD	0	0	4	5	5	5	5	5	6	35
LINCOLN	0	0	0	0	0	0	0	0	0	0
MERCURY	0	0	1	1	1	1	1	1	2	8
OLDSMOBILE	0	0	1	1	1	2	2	2	3	12
PLYMOUTH	0	0	2	1	2	2	2	2	2	13
PONTIAC	0	0	1	2	2	2	1	2	2	12
IMPORTS										
CAPRI	0	0	0	0	0	0	0	0	0	0
COLT	0	0	0	0	0	0	0	0	0	0
DATSUN	0	0	1	1	1	1	1	1	2	8
FIAT	0	0	0	0	0	0	0	0	0	0
HONDA	0	0	0	0	0	0	0	0	0	0
MAZDA	0	0	0	0	0	0	0	0	0	0
OPEL	0	0	0	0	0	1	0	0	0	1
TOYOTA	0	0	1	1	1	1	2	2	2	10
VW	0	0	1	1	2	2	2	2	2	12
VOLVO	0	0	0	0	0	0	0	0	0	0
TOTALS	0	0	20	22	25	27	27	35	44	200

TABLE 1 (Continued)

SUMMARY OF VEHICLE MAKES

ST. LOUIS

	1966. 1967. 1968	1969	1970	1971	1972	1973	1974	1975	1976	TOTAL
LIGHT-DUTY TRUCKS										
CHEVROLET	0	0	0	0	0	0	0	3	2	5
DODGE	0	0	0	0	0	0	0	1	1	2
FORD	0	0	0	0	0	0	0	3	2	5
GMC	0	0	0	0	0	0	0	0	0	0
FOREIGN	0	0	0	0	0	0	0	0	1	1
DOMESTICS										
AMC	3	1	1	1	1	1	2	2	5	17
BUICK	3	2	3	3	3	4	3	3	9	33
CADILLAC	1	1	1	1	1	1	1	1	4	12
CHEVROLET	12	7	8	9	11	11	11	10	29	108
CHRYSLER	1	1	1	1	1	1	1	1	2	10
DODGE	3	1	2	2	2	3	3	2	8	26
FORD	11	6	7	8	9	9	9	8	27	94
LINCOLN	1	0	0	0	1	0	1	1	1	5
MERCURY	1	1	1	2	2	2	2	2	7	20
OLDSMOBILE	3	2	2	3	3	4	3	4	11	35
PLYMOUTH	4	2	3	3	3	3	3	3	9	33
PONTIAC	5	3	2	3	3	4	3	3	10	36
IMPORTS										
CAPRI	0	0	0	0	1	1	1	0	1	4
COLT	0	0	0	0	0	0	0	0	1	1
DATSUN	0	0	1	1	1	1	2	2	5	13
FIAT	0	0	0	0	0	0	0	1	2	3
HONDA	0	0	0	0	0	0	0	1	2	3
MAZDA	0	0	0	0	0	1	1	1	1	4
OPEL	0	0	0	0	0	1	0	0	0	1
TOYOTA	0	1	0	1	1	1	2	2	6	14
VW	2	2	2	2	2	2	2	1	5	20
VOLVO	0	0	0	0	0	0	0	0	1	1
TOTALS	50	30	34	40	45	50	50	55	152	506

TABLE 1 (Continued)

SUMMARY OF VEHICLE MAKES

WASHINGTON D.C.

	1966, 1967, 1968	1969	1970	1971	1972	1973	1974	1975	1976	TOTAL
LIGHT-DUTY TRUCKS										
CHEVROLET	0	0	0	0	0	0	0	3	4	7
DODGE	0	0	0	0	0	0	0	1	2	3
FORD	0	0	0	0	0	0	0	3	3	6
GMC	0	0	0	0	0	0	0	0	0	0
FOREIGN	0	0	0	0	0	0	0	0	1	1
DOMESTICS										
AMC	0	0	0	0	0	1	1	1	1	4
BUICK	0	0	0	0	0	2	1	2	2	7
CADILLAC	0	0	0	0	0	1	1	1	1	4
CHEVROLET	0	0	0	0	0	5	6	5	7	23
CHRYSLER	0	0	0	0	0	0	1	1	0	2
DODGE	0	0	0	0	0	1	1	1	2	5
FORD	0	0	0	0	0	5	5	5	6	21
LINCOLN	0	0	0	0	0	0	0	0	0	0
MERCURY	0	0	0	0	0	1	1	1	2	5
OLDSMOBILE	0	0	0	0	0	2	2	2	3	9
PLYMOUTH	0	0	0	0	0	2	2	2	2	8
PONTIAC	0	0	0	0	0	2	1	2	2	7
IMPORTS										
CAPRI	0	0	0	0	0	0	0	0	0	0
COLT	0	0	0	0	0	0	0	0	0	0
DATSUN	0	0	0	0	0	1	1	1	2	5
FIAT	0	0	0	0	0	0	0	0	0	0
HONDA	0	0	0	0	0	0	0	0	0	0
MAZDA	0	0	0	0	0	0	0	0	0	0
OPEL	0	0	0	0	0	1	0	0	0	1
TOYOTA	0	0	0	0	0	1	2	2	2	7
VW	0	0	0	0	0	2	2	2	2	8
VOLVO	0	0	0	0	0	0	0	0	0	0
TOTALS	0	0	0	0	0	27	27	35	44	133

TABLE 2

SUMMARY OF TEST VEHICLE CHARACTERISTICS BY MODEL YEAR

CALIFORNIA

	1966, 1967, 1968	1969	1970	1971	1972	1973	1974	1975	1976	1975 (TRUCKS)	1976 (TRUCKS)	TOTALS
INERTIA WEIGHTS (LBS)												
1750	0	0	0	0	0	0	0	0	0	0	0	0
2000	0	0	0	0	1	0	1	1	1	0	0	4
2250	0	0	0	1	2	3	1	2	3	0	0	12
2500	0	0	2	4	2	3	1	1	1	0	0	14
2750	0	0	2	0	2	1	4	1	3	0	1	14
3000	0	0	6	2	2	5	2	2	2	0	0	21
3500	0	0	2	8	3	1	3	6	8	1	1	33
4000	0	0	4	3	5	6	4	3	8	6	8	47
4500	0	0	4	2	5	5	9	9	5	0	0	39
5000	0	0	0	2	3	2	2	1	2	0	0	12
5500	0	0	0	0	0	1	0	2	1	0	0	4
ENGINE DISPLACEMENT (CI)												
UNDER 251	0	0	8	8	9	10	10	10	15	0	6	76
251 - 330	0	0	5	4	3	2	3	3	6	2	3	31
331 - 399	0	0	3	8	5	8	9	9	8	5	1	56
OVER 399	0	0	4	2	8	7	5	6	5	0	0	37
NUMBER OF ENGINE CYLINDERS												
4	0	0	3	5	6	7	8	7	10	0	1	47
6	0	0	5	3	3	4	2	4	6	1	7	35
8	0	0	12	14	16	16	17	17	18	6	2	118
ROTARY	0	0	0	0	0	0	0	0	0	0	0	0

TABLE 2 (Continued)

SUMMARY OF TEST VEHICLE CHARACTERISTICS BY MODEL YEAR

ST. LOUIS

	1966, 1967, 1968	1969	1970	1971	1972	1973	1974	1975	1976	1975 (TRUCKS)	1976 (TRUCKS)	TOTALS
INERTIA WEIGHTS (LBS)												
1750	0	0	0	0	0	0	0	0	0	0	0	0
2000	1	2	2	2	2	1	0	1	6	0	0	17
2250	1	0	1	2	1	1	4	2	8	0	0	20
2500	0	1	0	2	6	7	1	1	5	0	0	23
2750	0	0	1	1	1	2	6	5	6	0	1	23
3000	5	4	4	3	2	2	3	5	15	0	0	43
3500	16	9	8	11	11	6	6	8	26	0	0	101
4000	18	8	11	8	6	13	14	9	34	6	2	129
4500	6	4	5	10	10	8	9	12	30	1	3	98
5000	2	2	2	1	5	10	4	2	10	0	0	38
5500	1	0	0	0	1	0	3	3	6	0	0	14
ENGINE DISPLACEMENT (CI)												
UNDER 251	8	6	7	10	13	14	16	16	62	0	1	153
251 - 330	22	7	7	5	6	6	6	9	22	3	2	95
331 - 399	13	11	16	20	13	16	16	13	39	4	3	164
OVER 399	7	6	4	5	13	14	12	10	23	0	0	94
NUMBER OF ENGINE CYLINDERS												
4	2	3	3	6	9	10	13	11	34	0	1	92
6	6	3	4	4	5	3	4	5	30	1	0	65
8	42	24	27	30	31	36	33	31	82	6	5	347
ROTARY	0	0	0	0	0	1	0	1	0	0	0	2

TABLE 2 (Continued)

SUMMARY OF TEST VEHICLE CHARACTERISTICS BY MODEL YEAR

WASHINGTON D.C.

	1966, 1967, 1968	1969	1970	1971	1972	1973	1974	1975	1976	1975 (TRUCKS)	1976 (TRUCKS)	TOTALS
INERTIA WEIGHTS (LBS)												
1750	0	0	0	0	0	0	0	0	0	0	0	0
2000	0	0	0	0	0	1	0	2	2	0	0	5
2250	0	0	0	0	0	1	3	1	2	0	0	7
2500	0	0	0	0	0	2	1	1	1	0	1	6
2750	0	0	0	0	0	2	3	2	2	0	0	9
3000	0	0	0	0	0	5	1	2	3	0	0	11
3500	0	0	0	0	0	2	6	4	7	1	2	22
4000	0	0	0	0	0	6	6	4	9	6	7	38
4500	0	0	0	0	0	5	4	6	4	0	0	19
5000	0	0	0	0	0	2	1	3	3	0	0	9
5500	0	0	0	0	0	1	2	3	1	0	0	7
ENGINE DISPLACEMENT (CI)												
UNDER 251	0	0	0	0	0	10	11	11	14	0	2	48
251 - 330	0	0	0	0	0	2	3	3	8	3	2	21
331 - 399	0	0	0	0	0	9	8	6	6	4	6	39
OVER 399	0	0	0	0	0	6	5	8	6	0	0	25
NUMBER OF ENGINE CYLINDERS												
4	0	0	0	0	0	7	7	7	9	0	1	31
6	0	0	0	0	0	3	4	5	6	1	2	21
8	0	0	0	0	0	17	16	16	19	6	7	81
ROTARY	0	0	0	0	0	0	0	0	0	0	0	0

TABLE 3

EXHAUST EMISSION TEST RESULTS BY MODEL YEAR FOR PASSENGER CARS

CALIFORNIA

1975 FEDERAL TEST PROCEDURE

	N	AVERAGE MILEAGE	HC	CO	CO2	NOXC	FUEL ECONOMY FTP	HFET
1966	0.	0.	0.00	0.00	0.00	0.00	0.00	
1967	0.	0.	0.00	0.00	0.00	0.00	0.00	
1968	0.	0.	0.00	0.00	0.00	0.00	0.00	
1969	0.	0.	0.00	0.00	0.00	0.00	0.00	
1970	20.	75873.	5.59	53.84	497.17	4.46	15.63	
1971	22.	68891.	8.88	75.75	534.54	3.67	14.41	
1972	25.	58727.	3.16	42.21	607.31	3.30	14.18	
1973	27.	47521.	4.38	48.61	588.88	3.26	14.36	
1974	27.	32018.	4.84	41.19	633.25	2.20	13.42	
1975(CARS ONLY)	28.	16199.	.68	7.89	665.70	1.99	14.33	
1976(CARS ONLY)	34.	8670.	.72	7.95	618.41	1.57	14.96	21.08
TOTALS	183.	40421.	3.71	36.69	598.63	2.78	14.45	

EMISSION RESULTS IN GRAMS PER MILE
FUEL ECONOMY IN MILES PER GALLON

TABLE 3 (Continued)

EXHAUST EMISSION TEST RESULTS BY MODEL YEAR FOR PASSENGER CARS

ST. LOUIS

1975 FEDERAL TEST PROCEDURE

	N	AVERAGE MILEAGE	HC	CO	CO2	NOXC	FUEL ECONOMY FTP	FUEL ECONOMY HFET
1966	9.	91208.	13.44	141.61	418.81	2.37	14.13	
1967	16.	79736.	9.06	135.34	427.47	2.91	14.02	
1968	25.	85886.	7.82	91.37	513.84	4.36	13.39	
1969	30.	80973.	5.98	71.63	519.52	4.24	14.17	
1970	34.	65468.	6.15	82.06	511.99	3.77	14.07	
1971	40.	66264.	5.80	66.87	534.43	4.01	14.34	
1972	45.	58544.	4.28	57.23	546.32	4.79	14.68	
1973	50.	45331.	3.58	51.34	597.79	3.38	13.81	
1974	50.	35773.	4.25	60.49	568.70	3.08	14.17	
1975(CARS ONLY)	48.	23945.	1.83	34.40	601.34	2.67	14.40	
1976(CARS ONLY)	146.	16142.	1.52	21.59	564.91	2.63	15.52	18.77
TOTALS	493.	44108.	4.01	53.36	551.88	3.33	14.56	

EMISSION RESULTS IN GRAMS PER MILE
FUEL ECONOMY IN MILES PER GALLON

TABLE 3 (Continued)

EXHAUST EMISSION TEST RESULTS BY MODEL YEAR FOR PASSENGER CARS

WASHINGTON D.C.

1975 FEDERAL TEST PROCEDURE

	N	AVERAGE MILEAGE	HC	CO	CO2	NOXC	FUEL ECONOMY FTP	HFET
1966	0.	0.	0.00	0.00	0.00	0.00	0.00	
1967	0.	0.	0.00	0.00	0.00	0.00	0.00	
1968	0.	0.	0.00	0.00	0.00	0.00	0.00	
1969	0.	0.	0.00	0.00	0.00	0.00	0.00	
1970	0.	0.	0.00	0.00	0.00	0.00	0.00	
1971	0.	0.	0.00	0.00	0.00	0.00	0.00	
1972	0.	0.	0.00	0.00	0.00	0.00	0.00	
1973	27.	46568.	3.14	48.56	609.11	3.12	13.64	
1974	27.	28765.	3.23	41.59	580.73	3.13	14.65	
1975(CARS ONLY)	28.	19221.	1.60	23.47	595.75	2.72	14.79	
1976(CARS ONLY)	34.	4800.	.94	11.69	567.59	2.73	15.85	22.72
TOTALS	116.	23581.	2.14	30.07	587.11	2.91	14.80	

EMISSION RESULTS IN GRAMS PER MILE
FUEL ECONOMY IN MILES PER GALLON

TABLE 4

EXHAUST EMISSION TEST RESULTS FOR LIGHT-DUTY TRUCKS

CALIFORNIA

1975 FEDERAL TEST PROCEDURE

	N	AVERAGE MILEAGE	HC	CO	CO2	NOXC	FUEL ECONOMY FTP	HFET
1975	7.	20077.	1.34	19.41	667.09	1.88	12.86	
1976	10.	9867.	1.01	18.29	606.98	1.97	14.17	19.77

EMISSION RESULTS IN GRAMS PER MILE
FUEL ECONOMY IN MILES PER GALLON

TABLE 4 (Continued)

EXHAUST EMISSION TEST RESULTS FOR LIGHT-DUTY TRUCKS

ST. LOUIS

1975 FEDERAL TEST PROCEDURE

	N	AVERAGE MILEAGE	HC	CO	CO2	NOXC	FUEL ECONOMY FTP	FUEL ECONOMY HFET
1975	7.	20612.	1.54	31.59	670.16	2.21	12.44	
1976	6.	8551.	2.08	35.26	613.01	2.83	13.31	18.39

EMISSION RESULTS IN GRAMS PER MILE
FUEL ECONOMY IN MILES PER GALLON

TABLE 4 (Continued)

EXHAUST EMISSION TEST RESULTS FOR LIGHT-DUTY TRUCKS

WASHINGTON D.C.

1975 FEDERAL TEST PROCEDURE

	N	AVERAGE MILEAGE	HC	CO	CO2	NOXC	FUEL ECONOMY FTP	FUEL ECONOMY HFET
1975	7.	15023.	1.09	14.00	662.23	2.20	13.28	
1976	10.	5511.	.98	13.64	630.35	2.58	13.80	19.45

EMISSION RESULTS IN GRAMS PER MILE
FUEL ECONOMY IN MILES PER GALLON

TABLE 5

PASSENGER CARS MEETING FEDERAL STANDARDS

CALIFORNIA

1975/1976 FEDERAL STANDARDS

		HC 1.5 GM/MI		CO 15 GM/MI		NOXC 3.1 GM/MI		PASSED ALL THREE	
	N	NO.	PCT	NO.	PCT	NO.	PCT	NO.	PCT
1966	0.	0.	0.00	0.	0.00	0.	0.00	0.	0.00
1967	0.	0.	0.00	0.	0.00	0.	0.00	0.	0.00
1968	0.	0.	0.00	0.	0.00	0.	0.00	0.	0.00
1969	0.	0.	0.00	0.	0.00	0.	0.00	0.	0.00
1970	20.	0.	0.00	1.	5.00	3.	15.00	0.	0.00
1971	22.	0.	0.00	3.	13.64	10.	45.45	0.	0.00
1972	25.	2.	8.00	2.	8.00	13.	52.00	1.	4.00
1973	27.	1.	3.70	1.	3.70	18.	66.67	0.	0.00
1974	27.	3.	11.11	2.	7.41	22.	81.48	1.	3.70
1975	28.	28.	100.00	24.	85.71	25.	89.29	21.	75.00
1976	34.	33.	97.06	31.	91.18	32.	94.12	29.	85.29
TOTALS	183.	67.	36.61	64.	34.97	123.	67.21	52.	28.42

TABLE 5 (Continued)

PASSENGER CARS MEETING FEDERAL STANDARDS

ST. LOUIS

1975/1976 FEDERAL STANDARDS

		HC 1.5 GM/MI		CO 15 GM/MI		NOXC 3.1 GM/MI		PASSED ALL THREE	
	N	NO.	PCT	NO.	PCT	NO.	PCT	NO.	PCT
1966	9.	0.	0.00	0.	0.00	7.	77.78	0.	0.00
1967	16.	0.	0.00	0.	0.00	11.	68.75	0.	0.00
1968	25.	0.	0.00	0.	0.00	8.	32.00	0.	0.00
1969	30.	0.	0.00	0.	0.00	11.	36.67	0.	0.00
1970	34.	0.	0.00	0.	0.00	11.	32.35	0.	0.00
1971	40.	1.	2.50	1.	2.50	11.	27.50	1.	2.50
1972	45.	0.	0.00	2.	4.44	10.	22.22	0.	0.00
1973	50.	0.	0.00	3.	6.00	25.	50.00	0.	0.00
1974	50.	0.	0.00	2.	4.00	30.	60.00	0.	0.00
1975	48.	27.	56.25	19.	39.58	32.	66.67	11.	22.92
1976	146.	91.	62.33	73.	50.00	117.	80.14	55.	37.67
TOTALS	493.	119.	24.14	100.	20.28	273.	55.38	67.	13.59

TABLE 5 (Continued)

PASSENGER CARS MEETING FEDERAL STANDARDS

WASHINGTON D.C.

1975/1976 FEDERAL STANDARDS

	N	HC 1.5 GM/MI NO.	HC 1.5 GM/MI PCT	CO 15 GM/MI NO.	CO 15 GM/MI PCT	NOXC 3.1 GM/MI NO.	NOXC 3.1 GM/MI PCT	PASSED ALL THREE NO.	PASSED ALL THREE PCT
1966	0.	0.	0.00	0.	0.00	0.	0.00	0.	0.00
1967	0.	0.	0.00	0.	0.00	0.	0.00	0.	0.00
1968	0.	0.	0.00	0.	0.00	0.	0.00	0.	0.00
1969	0.	0.	0.00	0.	0.00	0.	0.00	0.	0.00
1970	0.	0.	0.00	0.	0.00	0.	0.00	0.	0.00
1971	0.	0.	0.00	0.	0.00	0.	0.00	0.	0.00
1972	0.	0.	0.00	0.	0.00	0.	0.00	0.	0.00
1973	27.	2.	7.41	3.	11.11	15.	55.56	1.	3.70
1974	27.	0.	0.00	2.	7.41	15.	55.56	0.	0.00
1975	28.	19.	67.86	13.	46.43	23.	82.14	10.	35.71
1976	34.	29.	85.29	28.	82.35	24.	70.59	20.	58.82
TOTALS	116.	50.	43.10	46.	39.66	77.	66.38	31.	26.72

TABLE 6

1975 LIGHT-DUTY TRUCKS MEETING FEDERAL STANDARDS

CALIFORNIA

	N	HC 2.0 GM/MI NO.	HC 2.0 GM/MI PCT	CO 20 GM/MI NO.	CO 20 GM/MI PCT	NOXC 3.1 GM/MI NO.	NOXC 3.1 GM/MI PCT	PASSED ALL THREE NO.	PASSED ALL THREE PCT
CHEVROLET	3.	3.	100.00	3.	100.00	3.	100.00	3.	100.00
DODGE	1.	1.	100.00	1.	100.00	1.	100.00	1.	100.00
FORD	3.	2.	66.67	2.	66.67	2.	66.67	1.	33.33
GMC	0.	0.	0.00	0.	0.00	0.	0.00	0.	0.00
FOREIGN	0.	0.	0.00	0.	0.00	0.	0.00	0.	0.00
TOTALS	7.	6.	85.71	6.	85.71	6.	85.71	5.	71.43

1976 LIGHT-DUTY TRUCKS MEETING FEDERAL STANDARDS

CALIFORNIA

	N	HC 2.0 GM/MI NO.	HC 2.0 GM/MI PCT	CO 20 GM/MI NO.	CO 20 GM/MI PCT	NOXC 3.1 GM/MI NO.	NOXC 3.1 GM/MI PCT	PASSED ALL THREE NO.	PASSED ALL THREE PCT
CHEVROLET	4.	4.	100.00	3.	75.00	2.	50.00	1.	25.00
DODGE	2.	2.	100.00	2.	100.00	2.	100.00	2.	100.00
FORD	3.	2.	66.67	2.	66.67	3.	100.00	2.	66.67
GMC	0.	0.	0.00	0.	0.00	0.	0.00	0.	0.00
FOREIGN	1.	1.	100.00	1.	100.00	1.	100.00	1.	100.00
TOTALS	10.	9.	90.00	8.	80.00	8.	80.00	6.	60.00

TABLE 6 (Continued)

1975 LIGHT-DUTY TRUCKS MEETING FEDERAL STANDARDS

ST. LOUIS

	N	HC 2.0 GM/MI NO.	HC 2.0 GM/MI PCT	CO 20 GM/MI NO.	CO 20 GM/MI PCT	NOXC 3.1 GM/MI NO.	NOXC 3.1 GM/MI PCT	PASSED ALL THREE NO.	PASSED ALL THREE PCT
CHEVROLET	3.	1.	33.33	1.	33.33	3.	100.00	1.	33.33
DODGE	1.	1.	100.00	0.	0.00	0.	0.00	0.	0.00
FORD	3.	3.	100.00	2.	66.67	3.	100.00	2.	66.67
GMC	0.	0.	0.00	0.	0.00	0.	0.00	0.	0.00
FOREIGN	0.	0.	0.00	0.	0.00	0.	0.00	0.	0.00
TOTALS	7.	5.	71.43	3.	42.86	6.	85.71	3.	42.86

1976 LIGHT-DUTY TRUCKS MEETING FEDERAL STANDARDS

ST. LOUIS

	N	HC 2.0 GM/MI NO.	HC 2.0 GM/MI PCT	CO 20 GM/MI NO.	CO 20 GM/MI PCT	NOXC 3.1 GM/MI NO.	NOXC 3.1 GM/MI PCT	PASSED ALL THREE NO.	PASSED ALL THREE PCT
CHEVROLET	2.	1.	50.00	1.	50.00	2.	100.00	1.	50.00
DODGE	1.	1.	100.00	1.	100.00	1.	100.00	1.	100.00
FORD	2.	0.	0.00	0.	0.00	1.	50.00	0.	0.00
GMC	0.	0.	0.00	0.	0.00	0.	0.00	0.	0.00
FOREIGN	1.	1.	100.00	1.	100.00	1.	100.00	1.	100.00
TOTALS	6.	3.	50.00	3.	50.00	5.	83.33	3.	50.00

TABLE 6 (Continued)

1975 LIGHT-DUTY TRUCKS MEETING FEDERAL STANDARDS

WASHINGTON D.C.

		HC 2.0 GM/MI		CO 20 GM/MI		NOXC 3.1 GM/MI		PASSED ALL THREE	
	N	NO.	PCT	NO.	PCT	NO.	PCT	NO.	PCT
CHEVROLET	3.	3.	100.00	3.	100.00	3.	100.00	3.	100.00
DODGE	1.	1.	100.00	0.	0.00	1.	100.00	0.	0.00
FORD	3.	1.	33.33	2.	66.67	3.	100.00	1.	33.33
GMC	0.	0.	0.00	0.	0.00	0.	0.00	0.	0.00
FOREIGN	0.	0.	0.00	0.	0.00	0.	0.00	0.	0.00
TOTALS	7.	5.	71.43	5.	71.43	7.	100.00	4.	57.14

1976 LIGHT-DUTY TRUCKS MEETING FEDERAL STANDARDS

WASHINGTON D.C.

		HC 2.0 GM/MI		CO 20 GM/MI		NOXC 3.1 GM/MI		PASSED ALL THREE	
	N	NO.	PCT	NO.	PCT	NO.	PCT	NO.	PCT
CHEVROLET	4.	3.	75.00	3.	75.00	4.	100.00	3.	75.00
DODGE	2.	2.	100.00	2.	100.00	2.	100.00	2.	100.00
FORD	3.	2.	66.67	3.	100.00	2.	66.67	2.	66.67
GMC	0.	0.	0.00	0.	0.00	0.	0.00	0.	0.00
FOREIGN	1.	1.	100.00	1.	100.00	0.	0.00	0.	0.00
TOTALS	10.	8.	80.00	9.	90.00	8.	80.00	7.	70.00

TABLE 7

1976 PASSENGER CARS MEETING 1976 FEDERAL STANDARDS

CALIFORNIA

FEDERAL TEST PROCEDURE

	N	HC 1.5 GM/MI NO.	HC 1.5 GM/MI PCT	CO 15 GM/MI NO.	CO 15 GM/MI PCT	NOXC 3.1 GM/MI NO.	NOXC 3.1 GM/MI PCT	PASSED ALL THREE NO.	PASSED ALL THREE PCT
DOMESTICS									
AMC	1.	1.	100.00	1.	100.00	1.	100.00	1.	100.00
BUICK	2.	2.	100.00	2.	100.00	1.	50.00	1.	50.00
CADILLAC	1.	1.	100.00	1.	100.00	1.	100.00	1.	100.00
CHEVROLET	7.	7.	100.00	6.	85.71	7.	100.00	6.	85.71
CHRYSLER	0.	0.	0.00	0.	0.00	0.	0.00	0.	0.00
DODGE	2.	2.	100.00	2.	100.00	2.	100.00	2.	100.00
FORD	6.	6.	100.00	6.	100.00	5.	83.33	5.	83.33
LINCOLN	0.	0.	0.00	0.	0.00	0.	0.00	0.	0.00
MERCURY	2.	2.	100.00	2.	100.00	2.	100.00	2.	100.00
OLDSMOBILE	3.	3.	100.00	3.	100.00	3.	100.00	3.	100.00
PLYMOUTH	2.	1.	50.00	1.	50.00	2.	100.00	1.	50.00
PONTIAC	2.	2.	100.00	2.	100.00	2.	100.00	2.	100.00
IMPORTS									
CAPRI	0.	0.	0.00	0.	0.00	0.	0.00	0.	0.00
COLT	0.	0.	0.00	0.	0.00	0.	0.00	0.	0.00
DATSUN	2.	2.	100.00	2.	100.00	2.	100.00	2.	100.00
FIAT	0.	0.	0.00	0.	0.00	0.	0.00	0.	0.00
HONDA	0.	0.	0.00	0.	0.00	0.	0.00	0.	0.00
MAZDA	0.	0.	0.00	0.	0.00	0.	0.00	0.	0.00
OPEL	0.	0.	0.00	0.	0.00	0.	0.00	0.	0.00
TOYOTA	2.	2.	100.00	2.	100.00	2.	100.00	2.	100.00
VW	2.	2.	100.00	1.	50.00	2.	100.00	1.	50.00
VOLVO	0.	0.	0.00	0.	0.00	0.	0.00	0.	0.00
TOTALS	34.	33.	97.06	31.	91.18	32.	94.12	29.	85.29

TABLE 7 (Continued)

1976 PASSENGER CARS MEETING 1976 FEDERAL STANDARDS

ST. LOUIS

FEDERAL TEST PROCEDURE

	N	HC 1.5 GM/MI NO.	HC 1.5 GM/MI PCT	CO 15 GM/MI NO.	CO 15 GM/MI PCT	NOXC 3.1 GM/MI NO.	NOXC 3.1 GM/MI PCT	PASSED ALL THREE NO.	PASSED ALL THREE PCT
DOMESTICS									
AMC	5.	4.	80.00	4.	80.00	3.	60.00	3.	60.00
BUICK	9.	7.	77.78	5.	55.56	7.	77.78	4.	44.44
CADILLAC	4.	3.	75.00	2.	50.00	4.	100.00	2.	50.00
CHEVROLET	29.	17.	58.62	12.	41.38	24.	82.76	10.	34.48
CHRYSLER	2.	0.	0.00	0.	0.00	0.	0.00	0.	0.00
DODGE	8.	3.	37.50	3.	37.50	7.	87.50	2.	25.00
FORD	27.	21.	77.78	21.	77.78	22.	81.48	16.	59.26
LINCOLN	1.	1.	100.00	0.	0.00	1.	100.00	0.	0.00
MERCURY	7.	5.	71.43	5.	71.43	7.	100.00	5.	71.43
OLDSMOBILE	11.	4.	36.36	3.	27.27	9.	81.82	3.	27.27
PLYMOUTH	9.	2.	22.22	2.	22.22	8.	88.89	1.	11.11
PONTIAC	10.	6.	60.00	3.	30.00	5.	50.00	0.	0.00
IMPORTS									
CAPRI	1.	1.	100.00	0.	0.00	1.	100.00	0.	0.00
COLT	1.	1.	100.00	0.	0.00	1.	100.00	0.	0.00
DATSUN	5.	2.	40.00	4.	80.00	4.	80.00	2.	40.00
FIAT	2.	2.	100.00	1.	50.00	2.	100.00	1.	50.00
HONDA	2.	2.	100.00	1.	50.00	2.	100.00	1.	50.00
MAZDA	1.	1.	100.00	1.	100.00	1.	100.00	1.	100.00
OPEL	0.	0.	0.00	0.	0.00	0.	0.00	0.	0.00
TOYOTA	6.	6.	100.00	3.	50.00	3.	50.00	1.	16.67
VW	5.	3.	60.00	3.	60.00	5.	100.00	3.	60.00
VOLVO	1.	0.	0.00	0.	0.00	1.	100.00	0.	0.00
TOTALS	146.	91.	62.33	73.	50.00	117.	80.14	55.	37.67

TABLE 7 (Continued)

1976 PASSENGER CARS MEETING 1976 FEDERAL STANDARDS

WASHINGTON D.C.

FEDERAL TEST PROCEDURE

		HC 1.5 GM/MI		CO 15 GM/MI		NOXC 3.1 GM/MI		PASSED ALL THREE	
	N	NO.	PCT	NO.	PCT	NO.	PCT	NO.	PCT
DOMESTICS									
AMC	1.	1.	100.00	1.	100.00	0.	0.00	0.	0.00
BUICK	2.	1.	50.00	1.	50.00	2.	100.00	1.	50.00
CADILLAC	1.	1.	100.00	1.	100.00	1.	100.00	1.	100.00
CHEVROLET	7.	5.	71.43	5.	71.43	4.	57.14	3.	42.86
CHRYSLER	0.	0.	0.00	0.	0.00	0.	0.00	0.	0.00
DODGE	2.	2.	100.00	2.	100.00	1.	50.00	1.	50.00
FORD	6.	5.	83.33	5.	83.33	6.	100.00	5.	83.33
LINCOLN	0.	0.	0.00	0.	0.00	0.	0.00	0.	0.00
MERCURY	2.	2.	100.00	2.	100.00	1.	50.00	1.	50.00
OLDSMOBILE	3.	3.	100.00	3.	100.00	3.	100.00	3.	100.00
PLYMOUTH	2.	1.	50.00	1.	50.00	0.	0.00	0.	0.00
PONTIAC	2.	2.	100.00	2.	100.00	2.	100.00	2.	100.00
IMPORTS									
CAPRI	0.	0.	0.00	0.	0.00	0.	0.00	0.	0.00
COLT	0.	0.	0.00	0.	0.00	0.	0.00	0.	0.00
DATSUN	2.	2.	100.00	1.	50.00	1.	50.00	0.	0.00
FIAT	0.	0.	0.00	0.	0.00	0.	0.00	0.	0.00
HONDA	0.	0.	0.00	0.	0.00	0.	0.00	0.	0.00
MAZDA	0.	0.	0.00	0.	0.00	0.	0.00	0.	0.00
OPEL	0.	0.	0.00	0.	0.00	0.	0.00	0.	0.00
TOYOTA	2.	2.	100.00	2.	100.00	1.	50.00	1.	50.00
VW	2.	2.	100.00	2.	100.00	2.	100.00	2.	100.00
VOLVO	0.	0.	0.00	0.	0.00	0.	0.00	0.	0.00
TOTALS	34.	29.	85.29	28.	82.35	24.	70.59	20.	58.82

TABLE 8

SUMMARY OF MODAL EMISSION RESULTS ON 200 VEHICLES

CALIFORNIA

MODE NUMBER	FROM-TO (MPH)	DISTANCE (MILES)	TIME IN MODE (SEC)	HC	CO	CO2	NOX	FUEL ECON
1	0 - 30	.0601	12	5.34	58.05	1112.9	7.52	8.14
2	30 - 0	.0741	16	1.91	21.55	399.6	.80	22.38
3	0 - 15	.0201	8	6.10	80.41	1230.1	3.44	7.32
4	15 - 30	.0705	11	2.82	26.48	771.6	4.32	11.99
5	30 - 45	.1360	13	2.15	16.59	644.5	5.69	14.35
6	45 - 30	.1268	12	1.55	7.32	276.9	1.34	33.35
7	30 - 60	.2163	17	3.44	84.22	755.3	6.91	11.47
8	60 - 45	.1767	12	1.64	8.01	322.0	2.47	28.87
9	45 - 60	.2043	14	1.88	24.86	636.0	6.95	14.41
10	60 - 15	.3367	30	1.96	9.62	284.4	1.71	31.63
11	15 - 60	.3136	26	3.36	58.36	802.0	8.12	10.86
12	60 - 0	.1974	21	2.57	12.35	308.3	1.90	29.50
13	0 - 60	.3399	32	3.07	49.08	806.7	7.98	10.94
14	60 - 30	.2994	23	1.81	8.91	317.8	2.25	28.70
15	30 - 15	.0579	9	1.42	13.82	358.4	.93	25.87
16	15 - 0	.0174	8	3.31	55.71	762.3	.79	11.55
17	0 - 45	.1763	22	3.39	39.15	823.8	7.04	10.92
18	45 - 15	.1392	16	1.80	10.88	323.6	1.46	28.38
19	15 - 45	.1528	18	2.64	31.67	719.1	5.88	12.71
20	45 - 0	.1304	19	2.23	14.59	372.8	1.58	24.57
21	0 - 60	.2658	25	3.84	91.23	843.3	7.57	10.05
22	60 - 0	.2635	28	2.36	12.81	351.1	2.22	25.76
23	0 - 30	.0739	15	3.82	43.56	900.7	5.31	10.13
24	30 - 60	.3135	25	1.86	23.72	587.7	5.78	15.44
25	60 - 30	.2362	18	1.67	9.11	372.9	3.04	25.16
26	30 - 0	.0444	10	2.08	20.38	531.0	1.47	17.56
27	0 - 60	.4009	38	2.45	30.67	699.2	6.88	12.92
28	60 - 0	.3293	35	2.17	12.58	375.7	2.45	24.22
29	0 - 30	.0887	18	3.48	38.48	763.1	3.93	11.90
30	30 - 60	.2641	21	2.23	36.60	599.9	5.70	14.95
31	60 - 30	.1813	14	1.69	10.29	405.0	3.47	23.42
32	30 - 0	.0596	13	2.14	21.80	481.9	1.22	19.10
TOTAL CALCULATED RESULTS				2.23	25.53	534.2	4.28	16.54
TOTAL BAG RESULTS				2.26	25.45	531.7	4.10	16.65
33	IDLE			.55	7.66	84.0	.07	106.37
34	5 MPH STEADY STATE			6.25	85.91	1040.1	.74	8.42
35	10 MPH STEADY STATE			3.06	36.39	671.3	.88	12.92
36	15 MPH STEADY STATE			1.86	20.56	496.2	.54	17.97
37	30 MPH STEADY STATE			1.19	9.45	384.9	1.19	23.69
38	45 MPH STEADY STATE			1.11	6.03	398.9	2.62	23.36
39	60 MPH STEADY STATE			1.12	8.50	462.3	4.95	19.87

EMISSION RESULTS IN GRAMS PER MILE (PER MINUTE FOR IDLE)
FUEL ECONOMY IN MILES PER GALLON (MINUTES PER GALLON FOR IDLE)

TABLE 8 (Continued)

SUMMARY OF MODAL EMISSION RESULTS ON 193 VEHICLES

ST. LOUIS

MODE NUMBER	FROM-TO (MPH)	DISTANCE (MILES)	TIME IN MODE (SEC)	HC	CO	CO2	NOX	FUEL ECON
1	0 - 30	.0601	12	5.13	73.64	1007.9	7.70	8.56
2	30 - 0	.0741	16	2.15	30.07	373.8	.94	22.55
3	0 - 15	.0201	8	6.21	116.27	1050.6	2.50	7.81
4	15 - 30	.0705	11	2.64	34.51	690.7	4.12	12.95
5	30 - 45	.1360	13	1.97	16.94	592.7	6.03	15.46
6	45 - 30	.1268	12	1.50	9.63	255.5	1.69	34.76
7	30 - 60	.2163	17	3.41	80.25	735.9	8.27	11.64
8	60 - 45	.1767	12	1.72	9.49	291.6	3.21	30.76
9	45 - 60	.2043	14	1.74	16.82	607.5	8.21	15.17
10	60 - 15	.3367	30	2.37	13.34	259.9	2.07	32.94
11	15 - 60	.3136	26	2.97	53.46	771.5	10.16	11.19
12	60 - 0	.1974	21	3.20	17.00	278.1	2.53	30.42
13	0 - 60	.3399	32	3.00	46.98	771.5	9.75	11.29
14	60 - 30	.2994	23	2.05	12.09	294.0	2.81	29.82
15	30 - 15	.0579	9	1.50	20.84	331.7	.96	26.46
16	15 - 0	.0174	8	4.21	89.89	695.7	.72	11.80
17	0 - 45	.1763	22	3.28	45.28	766.5	8.16	11.39
18	45 - 15	.1392	16	1.90	15.85	305.3	1.84	28.64
19	15 - 45	.1528	18	2.57	36.61	668.7	6.36	13.32
20	45 - 0	.1304	19	2.55	21.88	348.3	2.00	24.62
21	0 - 60	.2658	25	4.15	101.23	800.7	8.72	10.15
22	60 - 0	.2635	28	2.95	18.30	323.9	2.80	26.36
23	0 - 30	.0739	15	4.01	62.56	804.2	5.47	10.65
24	30 - 60	.3135	25	1.82	21.30	552.8	6.57	16.31
25	60 - 30	.2362	18	1.80	12.69	350.9	3.89	25.44
26	30 - 0	.0444	10	2.35	32.08	501.3	1.45	17.45
27	0 - 60	.4009	38	2.42	31.77	658.7	8.22	13.42
28	60 - 0	.3293	35	2.68	18.82	349.7	3.03	24.56
29	0 - 30	.0887	18	3.54	57.39	662.1	3.72	12.77
30	30 - 60	.2641	21	2.08	32.37	556.3	6.28	15.90
31	60 - 30	.1813	14	1.79	14.06	375.7	4.37	23.76
32	30 - 0	.0596	13	2.39	34.07	450.0	1.26	18.90
TOTAL CALCULATED RESULTS				2.42	29.76	500.9	5.19	17.12
TOTAL BAG RESULTS				2.51	29.96	491.8	5.29	17.38
33	IDLE			.70	13.03	75.4	.07	104.68
34	5 MPH STEADY STATE			7.89	143.45	954.3	.80	8.37
35	10 MPH STEADY STATE			3.93	63.01	610.3	.59	13.27
36	15 MPH STEADY STATE			2.32	37.12	460.6	.53	18.29
37	30 MPH STEADY STATE			1.33	11.85	351.1	1.14	25.35
38	45 MPH STEADY STATE			1.08	7.31	370.3	2.85	24.76
39	60 MPH STEADY STATE			1.15	9.81	429.2	5.61	21.17

EMISSION RESULTS IN GRAMS PER MILE (PER MINUTE FOR IDLE)
FUEL ECONOMY IN MILES PER GALLON (MINUTES PER GALLON FOR IDLE)

TABLE 8 (Continued)

SUMMARY OF MODAL EMISSION RESULTS ON 44 VEHICLES

WASHINGTON D.C.

MODE NUMBER	FROM-TO (MPH)	DISTANCE (MILES)	TIME IN MODE (SEC)	HC	CO	CO2	NOX	FUEL ECON
1	0 - 30	.0601	12	1.33	22.72	920.2	6.67	10.43
2	30 - 0	.0741	16	.38	5.35	424.4	1.03	21.58
3	0 - 15	.0201	8	1.50	38.21	966.5	3.54	9.36
4	15 - 30	.0705	11	.58	8.22	614.8	3.67	15.49
5	30 - 45	.1360	13	.41	3.70	541.9	4.62	17.54
6	45 - 30	.1268	12	.27	1.71	303.1	.89	30.29
7	30 - 60	.2163	17	1.09	45.81	679.4	6.11	13.32
8	60 - 45	.1767	12	.25	1.99	354.2	1.86	25.98
9	45 - 60	.2043	14	.43	11.96	551.3	5.72	17.11
10	60 - 15	.3367	30	.49	2.66	307.5	1.21	29.63
11	15 - 60	.3136	26	1.00	45.43	741.0	6.75	11.93
12	60 - 0	.1974	21	.61	3.33	347.6	1.50	26.08
13	0 - 60	.3399	32	.88	34.08	741.9	7.05	12.11
14	60 - 30	.2994	23	.33	2.01	338.4	1.59	27.05
15	30 - 15	.0579	9	.22	3.63	379.4	1.21	24.08
16	15 - 0	.0174	8	.74	23.98	792.2	1.37	11.23
17	0 - 45	.1763	22	.86	18.59	728.1	5.86	12.67
18	45 - 15	.1392	16	.33	2.81	348.9	.99	26.33
19	15 - 45	.1528	18	.64	14.01	589.8	4.82	15.91
20	45 - 0	.1304	19	.51	4.34	409.1	1.10	22.42
21	0 - 60	.2658	25	1.55	65.21	768.7	6.31	11.21
22	60 - 0	.2635	28	.58	3.78	384.1	1.67	23.73
23	0 - 30	.0739	15	.85	18.61	708.4	4.78	13.22
24	30 - 60	.3135	25	.43	9.91	519.0	4.79	18.01
25	60 - 30	.2362	18	.22	2.40	401.7	2.10	23.04
26	30 - 0	.0444	10	.34	5.33	570.3	1.96	16.01
27	0 - 60	.4009	38	.63	16.07	632.0	5.76	14.47
28	60 - 0	.3293	35	.55	3.42	402.9	1.76	22.78
29	0 - 30	.0887	18	.85	18.60	605.8	3.66	14.93
30	30 - 60	.2641	21	.58	17.43	509.2	4.58	17.96
31	60 - 30	.1813	14	.22	3.28	439.4	2.39	21.02
32	30 - 0	.0596	13	.37	6.33	518.6	1.69	17.56
TOTAL CALCULATED RESULTS				.57	13.71	517.7	3.57	17.30
TOTAL BAG RESULTS				.61	13.56	513.9	3.60	17.44
33	IDLE			.17	2.95	86.7	.17	106.58
34	5 MPH STEADY STATE			2.21	36.42	1051.2	1.57	8.64
35	10 MPH STEADY STATE			.99	12.20	644.5	.93	13.87
36	15 MPH STEADY STATE			.58	6.44	464.9	.78	19.37
37	30 MPH STEADY STATE			.30	.91	371.0	1.36	24.67
38	45 MPH STEADY STATE			.19	.82	384.4	1.63	24.43
39	60 MPH STEADY STATE			.17	1.39	441.1	3.48	21.10

EMISSION RESULTS IN GRAMS PER MILE (PER MINUTE FOR IDLE)
FUEL ECONOMY IN MILES PER GALLON (MINUTES PER GALLON FOR IDLE)

3.3 SULFATE EMISSIONS

Average sulfate emissions for 1975 and 1976 vehicles tested in St. Louis are presented in Table 9. Supporting data on each vehicle are presented in Appendix D, including the tests conducted on the two correlation vehicles.

3.4 EVAPORATIVE EMISSIONS

Table 10 summarizes the evaporative emissions performed in California using Indolene test fuel. Supporting data for individual vehicles are presented in Appendix F for both Indolene and commercial fuel.

3.5 HIGHWAY FUEL ECONOMY

Detailed emissions and fuel economy data from the Highway Fuel Economy Test (HFET) are presented in Appendix G. As mentioned before, summary data for HFET fuel economy are presented in Table 3 for passenger cars and in Table 4 for light-duty trucks.

3.6 FEDERAL SHORT-CYCLE EMISSIONS

Summary data on Federal Short Cycle Emissions are presented in Table 11. Detailed supporting data for individual vehicles are presented in Appendix I.

3.7 NEW YORK/NEW JERSEY SHORT-CYCLE EMISSIONS

Summary data on N.Y./N.J. Short-Cycle Emissions are presented in Table 11. Detailed data for individual vehicles are presented in Appendix J.

3.8 CLAYTON KEY-MODE EMISSIONS

Summary data on Clayton Key-Mode Emissions are presented in Table 11. Detailed data for individual vehicles are presented in Appendix K.

3.9 TWO-SPEED IDLE TEST EMISSIONS

Summary data on Two-Speed Idle Test Emissions are presented in Table 11. Detailed data for individual vehicles are presented in Appendix L.

3.10 FEDERAL THREE-MODE EMISSIONS

Summary data on Federal Three-Mode Emissions are presented in Table 11. Detailed data for individual vehicles are presented in Appendix M.

TABLE 9

SUMMARY OF SULFATE MEASUREMENTS

ST. LOUIS

	NO. OF VEHICLES	HC	CO	CO2	NOXC	FUEL ECONOMY	H2SO4 (CORRECTED)
LIGHT-DUTY TRUCKS							
1975	3.	.42	5.36	490.5	2.61	18.16	1.31
1976	2.	.54	18.88	531.2	2.59	15.98	.53
TOTAL	5.	.47	10.77	506.8	2.60	17.29	1.00
PASSENGER CARS							
1975	28.	1.06	17.42	462.3	3.33	18.59	1.21
1976	49.	.93	18.24	444.4	3.46	19.22	.81
TOTAL	77.	.98	17.94	450.9	3.42	18.99	.95

EMISSION RESULTS IN GRAMS PER MILE
FUEL ECONOMY IN MILES PER GALLON
SULFATE RESULTS IN MILLIGRAMS PER MILE

TABLE 10

SUMMARY OF EVAPORATIVE EMISSION MEASUREMENTS

CALIFORNIA

NO. OF VEHICLES	FUEL	TEST	HC, GRAMS
22.	INDOLENE	DIURNAL	7.15
		HOT SOAK	5.18
		TOTAL	12.32
	COMMERCIAL	DIURNAL	2.91
		HOT SOAK	2.96
		TOTAL	5.88

TABLE 11

SUMMARY OF SHORT CYCLE EMISSIONS MEASUREMENTS

ST. LOUIS

	NO. OF VEHICLES	HC	CO	CO2	NOXC	FUEL ECONOMY
FED SHORT CYCLE	506.	3.03	32.60	453.3	2.46	18.34
NY/NJ SHORT CYCLE	506.	4.54	54.37	599.6	2.64	13.32

		MODE	HC	CO	NO
KEY MODE	506.	HI SPEED	137.	.38	1496.
		LO SPEED	115.	.50	733.
		IDLE	177.	1.75	80.
TWO-SPEED IDLE	506.	2250 RPM	122.	.54	175.
		IDLE	178.	1.60	46.
FED THREE-MODE	506.	HI SPEED	91.	.39	1618.
		LO SPEED	115.	.45	1069.
		IDLE DR.	155.	1.56	80.
		IDLE NEU.	187.	1.71	48.

Appendix A

LISTING OF VEHICLE AND TEST PARAMETERS

LEGEND

VEH - Vehicle Number

RUN - Run Number

DATE - Date of Test (month, day, year)

YR - Model Year

MAKE - Vehicle Make

MODL - Vehicle Model

C - Number of Cylinders and Rotors

CID - Engine Displacement in Cubic Inches

V - Number of Carburetor Venturis (0: fuel injection)

T - Type of Transmission (1: automatic; 2: semi-automatic; 3: 3-speed manual; 4: 4-speed manual; 5: 5-speed manual)

A - Air Conditioning? (1: Yes; 2: No)

FT - Fuel Tank Capacity in Gallons

IRPM - Idle RPM

IRPMS - Idle RPM Spec.

P - PCV System Operational (1: Yes; 2: No)

DW - Ignition Point Dwell in Degrees, actual (99: electronic ignition)

DWS - Ignition Point Dwell in Degrees, specs. (99: electronic ignition)

IGN - Ignition Timing in Degrees, actual (+ indicates before top dead center; - indicates after top dead center; 000 indicates top dead center)

IGNS - Ignition Timing in Degrees, Manufacturer's Specification (+ indicates before top dead center; - indicates after top dead center; 000 indicates top dead center)

INRT - Dynamometer Inertia Weight Setting

RLHP - Road Load Horsepower Setting

L - Was 10% RLPH added to simulate air conditioner (1: Yes; 2: No)

DB - Dry Bulb Temperature (degrees Fahrenheit)

WB - Wet Bulb Temperature (degrees Fahrenheit)

BAROM - Barometric Pressure (inches Hg)

APPENDIX A

LISTING OF VEHICLE AND TEST PARAMETERS

CALIFORNIA

VEH	RUN	DATE	YR	MAKE	MODL	C	CID	V	T	FAM	A	FT	IRPM	IRPMS	DW	DWS	IGN	IGNS	INRT	RLHP	L	DB	WB	BAROM
7001	0336	110876	76	CHEV	G10V	6	250	1	3	GM12F1U	1	21	1025	600	99	99	+06	+06	4000	12.0	2	74	63	29.96
7002	0389	120176	76	CHEV	C10	6	250	1	3	GM12F1U	2	20	1000	600	99	99	+18	+06	4000	13.2	1	74	59	30.04
7003	0407	120976	76	CHEV	C10	6	250	1	3	GM12F1U	1	21	890	600	99	99	+30	+06	4000	12.0	2	72	58	30.01
7004	0414	121076	76	CHEV	SCOT	6	250	1	1	GM12F1U	2	22	775	600	99	99	+03	+04	4000	13.2	1	77	63	29.98
7005	0404	120676	76	DODG	B100	6	225	1	3	TD22515S	2	26	775	750	99	99	+02	000	3500	11.2	2	72	61	29.96
7006	0377	112976	76	DODG	CUST	8	318	2	3	TD318255	1	20	840	750	99	99	+02	+02	4000	13.2	1	77	65	30.14
7007	0278	101976	76	FORD	E100	6	300	2	3	300	2	18	1050	550	99	99	+06	+06	4000	12.0	2	74	63	29.87
7008	0317	102876	76	FORD	F100	8	360	2	1	360/390	1	19	725	650	99	99	+12	+12	4000	12.0	2	77	65	29.93
7009	0448	011777	76	FORD	E100	6	300	1	3	3001CMF	1	20	1000	750	99	99	000	+06	4000	13.2	1	73	59	29.99
7010	0288	102276	76	TOYO	SR5	4	133	2	5	20R	2	12	700	850	50	52	+05	+08	2750	9.9	2	71	59	30.04
7011	0271	101376	75	CHEV	G10V	8	350	2	3	GM12J43A	1	21	625	600	99	99	+06	+06	4000	12.0	2	71	61	29.93
7012	0450	012577	75	CHEV	C10	8	350	4	1	GM12J43A	2	20	500	600	99	99	+08	+06	4000	12.0	2	74	61	29.94
7013	0231	100576	75	CHEV	G10V	8	350	4	1	GM12J43A	1	21	600	600	99	99	+06	+06	4000	13.2	1	73	61	29.85
7014	0142	080676	75	DODG	TRAD	8	318	2	1	LA2	2	23	750	750	99	99	000	000	3500	11.2	2	71	61	29.88
7015	0441	011377	75	FORD	F100	6	300	1	3	300 1CMF	2	19	780	700	99	99	+12	+12	4000	12.0	2	78	63	30.01
7016	0434	010677	75	FORD	F100	8	360	2	1	360 1CEF	1	22	625	500	99	99	+08	+06	4000	19.4	2	71	58	30.08
7017	0254	101276	75	FORD	E100	8	351	2	1	351W1CEF	2	22	760	600	99	99	+14	+14	4000	13.2	1	73	63	29.94
6018	0270	101576	76	AMC	PACE	6	258	1	1	IC	1	22	925	700	99	99	+08	+08	3500	11.2	2	74	65	29.86
6019	0253	101376	76	BUIC	REGA	8	350	4	1	GM41J4	1	26	600	600	99	99	+14	+12	4500	14.0	1	73	62	29.82
6020	0446	011077	76	BUIC	REGA	8	350	4	1	GM41J4	1	26	550	600	99	99	+14	+12	4000	13.2	1	76	61	29.93
6021	0249	101176	76	CADI	COUP	8	500	4	1	GM61V4	1	27	725	600	99	99	+06	+06	5500	15.3	1	73	62	29.86
6022	0197	092276	76	CHEV	MONT	8	350	4	1	GM11K4	1	22	725	600	99	99	+03	+06	4000	13.2	1	77	64	29.84
6023	0097	070276	76	CHEV	MONT	8	350	2	1	GM11K4	1	22	650	600	99	99	+05	+06	4000	13.2	1	75	64	29.86
6024	0305	102776	76	CHEV	VEGA	4	140	2	1	GM11C2	2	15	830	600	99	99	+12	+12	2750	10.9	1	76	64	29.93
6025	0297	102676	76	CHEV	CAPR	8	400	4	1	GM11K4	1	26	750	600	99	99	+06	+06	4500	14.0	1	72	58	29.94
6026	0362	111176	76	CHEV	CAMA	8	305	2	1	GM11G2	1	21	800	600	99	99	+10	000	4000	13.2	1	71	60	29.84
6027	0292	102276	76	CHEV	NOVA	6	250	1	1	GM11F1	1	21	675	600	99	99	+25	+10	3500	11.2	2	71	60	29.85
6028	0237	093076	76	CHEV	CHEV	4	85	1	4	GM11W1V	2	13	900	1000	99	99	+08	+08	2250	8.8	2	75	65	29.85
6029	0429	122776	76	DODG	ASPE	8	318	2	1	CD3182P5	1	18	800	750	99	99	+04	000	3500	12.3	1	73	62	29.89
6030	0319	110176	76	DODG	ASPE	6	225	1	1	CD255	1	18	875	750	99	99	+03	+02	4000	12.0	2	75	67	29.91
6031	0212	092776	76	FORD	PINT	4	140	2	1	2.3 1CEF	2	13	725	750	99	99	+21	+20	2750	9.9	2	72	60	29.74
6032	0236	100676	76	FORD	LTD	8	400	2	1	351M400	1	21	675	650	99	99	+10	+10	5000	14.7	1	75	63	29.88
6033	0424	120276	76	FORD	GRAN	8	302	2	1	302	1	19	500	500	99	99	+04	+08	3500	12.3	1	72	60	30.00
6034	0165	080576	76	FORD	GRAN	6	250	1	1	250 1CEF	1	19	670	600	99	99	+10	+10	3500	12.3	1	74	65	29.77
6035	0155	081676	76	FORD	GRAN	8	302	2	1	302 2CEF	1	19	800	700	99	99	+08	+08	3500	12.3	1	75	63	29.86
6036	0096	070876	76	FORD	ELIT	8	351	2	1	351M/400	1	27	550	650	99	99	+08	+08	4500	14.0	1	70	60	29.82
6037	0420	121476	76	MERC	MONG	8	351	2	1	351	1	21	700	650	99	99	+07	+08	5000	14.7	1	73	61	29.79
6038	0444	011277	76	MERC	BOBC	4	140	1	5	2.3 1CEF	2	14	650	550	99	99	+04	+06	3000	11.3	1	76	59	30.03
6039	0332	110376	76	OLDS	OMEG	6	250	2	1	GM30H2J	1	21	700	600	99	99	+23	+10	3500	12.3	1	75	63	29.91
6040	0427	122776	76	OLDS	CUTL	8	350	4	1	GM31J4	1	22	650	600	99	99	+18	+20	4000	13.2	1	71	60	29.94
6041	0435	010577	76	OLDS	VIST	8	455	4	1	GM31S4	1	22	925	600	99	99	+21	+20	4500	14.0	1	70	59	29.92
6042	0277	101976	76	PLYM	VOLA	6	225	1	1	CD225	1	18	975	750	99	99	+02	+02	3500	11.2	2	75	64	29.84
6043	0356	111576	76	PLYM	VOLA	8	318	2	1	CD318	1	18	750	750	99	99	000	000	4000	13.2	1	74	61	29.85
6044	0323	110176	76	PONT	FIRE	8	350	4	1	GM21K4	1	20	660	650	99	99	+14	+16	4000	13.2	1	73	60	29.87
6045	0354	111576	76	PONT	GPNP	8	400	4	1	GM21K4	1	25	625	650	99	99	+15	+16	4500	14.0	1	76	64	29.90
6046	0147	080676	76	DATS	B210	4	85	2	4	N082	2	11	630	700	99	99	+10	+10	2250	8.8	2	74	62	29.96
6047	0364	110876	76	DATS	610	4	119	2	1	N092	1	15	850	650	99	99	+08	+12	2750	10.9	1	74	63	29.99
6048	0188	091376	76	TOYO	CORR	4	97	2	5	2TC	2	16	925	850	53	52	+10	+10	2500	9.4	2	79	64	29.89
6049	0184	090976	76	TOYO	CORO	4	133	2	1	20R	1	16	925	850	54	52	+07	+08	3000	11.3	1	74	63	29.85
6050	0413	120976	76	VOLK	SEDA	4	97	0	4	2	1	11	1050	875	48	50	-05	-05	2000	8.3	2	75	62	29.97

APPENDIX A

LISTING OF VEHICLE AND TEST PARAMETERS

CALIFORNIA

VEH	RUN	DATE	YR	MAKE	MODL	C	CID	V	T	FAM	A	FT	IRPM	IRPMS	DW	DWS	IGN	IGNS	INRT	RLHP	L	DB	WB	BAROM
6051	0431	122976	76	VOLK	SCIR	4	97	0	4	32C	2	11	1050	950	99	99	-03	-03	2250	8.8	2	75	63	29.81
5052	0075	062676	75	AMC	PACE	6	258	1	1	232-258	2	25	540	700	99	99	+07	+03	3500	11.2	2	81	67	29.66
5053	0100	071276	75	BUIC	REGA	8	350	4	1	GM41J430	1	26	650	600	99	99	+16	+12	4500	14.0	1	71	61	29.82
5054	0110	071576	75	BUIC	REGA	8	350	4	1	GM41J430	1	26	550	600	99	99	+10	+12	4500	14.0	1	73	62	29.88
5055	0122	072076	75	CADI	DEVI	8	500	4	1	GM61V43	1	28	550	600	99	99	+04	+06	5500	15.3	1	73	63	29.85
5056	0259	100876	75	CHEV	MONZ	4	140	1	4	GM11C23	2	16	735	700	99	99	+12	+10	3000	10.3	2	75	64	29.87
5057	0124	072676	75	CHEV	MALI	8	350	4	1	GM11K43	1	22	600	600	99	99	+06	+06	4000	13.2	1	74	64	29.83
5058	0252	101276	75	CHEV	IMPA	8	350	4	1	GM11K43	1	22	710	600	99	99	+09	+06	5000	14.7	1	76	65	29.89
5059	0128	072776	75	CHEV	IMPA	8	400	4	1	GM11KA3	1	26	575	600	99	99	+07	+08	4500	14.0	1	74	63	29.89
5060	0229	100476	75	CHEV	NOVA	6	250	1	1	GM11F13A	2	21	625	600	99	99	+13	+10	3500	11.2	2	72	59	29.85
5061	0272	101876	75	CHRY	CORD	8	360	4	1	LA4	1	20	830	750	99	99	+08	+08	4500	14.0	1	72	62	29.97
5062	0206	092476	75	DODG	DART	8	318	2	1	LA2	1	16	750	750	99	99	+02	000	3500	12.3	1	74	62	29.83
5063	0099	071276	75	FORD	PINT	4	140	2	4	2.3 1CEF	2	11	825	850	99	99	+04	+06	2750	9.9	2	72	61	29.78
5064	0284	102076	75	FORD	LTD	8	351	2	1	351M400	1	24	700	700	99	99	+09	+10	4500	14.0	1	74	63	29.85
5065	0072	062376	75	FORD	LTD	8	460	4	1	460 2CMT	1	24	650	650	99	99	+10	+14	4500	14.0	1	73	61	29.78
5066	0131	072976	75	FORD	GRAN	6	250	1	1	250 1CEF	1	19	650	600	99	99	+06	+06	3500	11.2	2	75	64	30.01
5067	0337	110976	75	FORD	GRAN	8	302	2	1	3021CMF	1	19	725	500	99	99	-04	000	3500	11.2	2	72	61	30.01
5068	0201	092376	75	MERC	MONT	8	400	2	1	351M400	1	27	465	650	99	99	+06	+06	4500	14.0	1	74	63	29.92
5069	0181	091076	75	OLDS	CUTL	8	350	4	1	GM31J43	1	22	700	650	99	99	+18	+20	4000	13.2	1	71	60	29.85
5070	0139	080576	75	OLDS	DELT	8	455	4	1	GM31S43F	1	22	575	600	99	99	+20	+16	5500	15.3	1	73	62	29.86
5071	0334	110476	75	PLYM	DUST	6	225	1	1	RG	1	16	830	750	99	99	000	000	3500	11.2	2	72	59	29.89
5072	0378	112976	75	PLYM	STAW	8	360	2	1	CLA4CAP	1	20	975	750	99	99	+06	+06	4500	14.0	1	72	59	30.06
5073	0379	113076	75	PONT	CATA	8	400	4	1	GM21K43F	1	26	650	600	99	99	+10	+12	4500	14.0	1	72	56	30.09
5074	0402	120176	75	PONT	LEMA	8	350	4	1	GM21K43F	1	21	675	650	99	99	+12	+12	4000	13.2	1	77	66	29.84
5075	0134	073076	75	DATS	B210	4	85	2	1	N081	2	12	720	650	99	99	+10	+10	2250	8.8	2	80	66	29.95
5076	0091	060976	75	TOYO	CORO	4	133	2	5	20R	2	16	750	850	48	52	+08	+08	3000	11.3	1	72	61	29.68
5077	0328	110176	75	TOYO	CORO	4	97	2	4	2TC	2	12	1000	850	54	52	+07	+10	2500	9.4	2	80	66	29.82
5078	0084	062876	75	VOLK	SEDA	4	97	0	4	2	2	11	850	950	50	48	+02	-05	2250	8.8	2	73	63	29.77
5079	0273	101576	75	VOLK	RABB	4	90	2	1	32	2	11	750	950	40	47	-04	-03	2000	8.3	2	77	66	29.86
4080	0200	092376	74	AMC	MATA	8	304	2	1	304	1	25	575	700	30	30	+03	+03	4000	13.2	1	74	63	29.89
4081	0113	071976	74	BUIC	LESA	8	455	4	1	GM402-4	1	25	500	650	27	30	000	+04	4500	14.0	1	75	64	29.91
4082	0195	091676	74	CADI	COUP	8	472	4	1	GM501	1	28	630	600	30	30	+10	+10	5000	14.7	1	71	60	29.83
4083	0136	080276	74	CHEV	VEGA	4	140	1	1	GM101-1	2	16	750	750	29	32	+14	+12	2750	9.9	2	72	62	29.87
4084	0260	101476	74	CHEV	MONT	8	350	4	1	GM104-4	1	21	650	600	28	30	+08	+08	4000	13.2	1	75	64	29.85
4085	0370	111676	74	CHEV	MONT	8	350	4	1	GM104-4	1	26	820	600	55	30	+09	+10	4500	14.0	2	76	66	29.96
4086	0391	120376	74	CHEV	CAPR	8	350	2	1	GM104-4	1	26	675	600	31	30	+10	+06	4500	14.0	2	73	61	30.08
4087	0345	110976	74	CHEV	IMPA	8	350	4	1	GM1042A	1	26	625	650	30	30	+04	+08	4500	14.0	1	74	62	29.73
4088	0118	072276	74	CHEV	CAPR	8	400	4	1	GM104-4	1	26	690	600	32	30	+08	+08	4500	14.0	1	72	62	29.98
4089	0366	111576	74	CHRY	NEWP	8	360	4	1	LA4	1	25	650	750	99	99	+09	+05	4500	14.0	1	73	62	29.86
4090	0286	102176	74	DODG	DART	6	225	1	1	RG	1	16	1025	750	99	99	+06	000	3500	12.3	1	75	64	29.87
4091	0213	092876	74	FORD	PINT	4	140	2	4	2.3	2	13	850	850	38	38	+05	+06	2750	9.9	2	74	62	29.71
4092	0098	070976	74	FORD	MAVE	8	302	2	1	302	1	15	650	650	99	99	+06	+06	3000	11.3	1	73	62	29.80
4093	0340	110976	74	FORD	MUST	4	139	1	1	2.3	2	13	800	750	42	38	+07	+06	3000	10.3	2	74	63	29.91
4094	0126	072676	74	FORD	LTD	8	400	2	1	400	1	22	625	650	99	99	+12	+12	4500	14.0	1	74	63	29.86
4095	0219	100176	74	FORD	LTD	8	351	2	1	351C	1	22	700	650	99	99	+14	+14	4500	14.0	2	74	63	29.90
4096	0193	091376	74	MERC	MONT	8	460	4	1	460A	1	22	700	650	99	99	+14	+14	5000	14.7	1	72	61	29.86
4097	0183	091376	74	OLDS	CUTL	8	350	4	1	GM301-4	1	22	635	650	32	30	+12	+12	4000	13.2	1	74	63	29.87
4098	0386	120176	74	OLDS	CUTL	8	350	4	1	GM301-4	1	22	950	650	30	30	+10	+12	4500	14.0	1	76	63	29.97
4099	0166	090176	74	PLYM	SATE	8	318	2	1	LA2	1	20	775	750	99	99	000	000	4000	13.2	1	73	60	29.78
4100	0239	100776	74	PLYM	DUST	6	225	1	1	RG	1	16	825	750	99	99	000	000	3500	11.2	2	72	60	29.85

APPENDIX A

LISTING OF VEHICLE AND TEST PARAMETERS

CALIFORNIA

VEH	RUN	DATE	YR	MAKE	MODL	C	CID	V	T	FAM	A	FT	IRPM	IRPMS	DW	DWS	IGN	IGNS	INRT	RLHP	L	DB	WB	BAROM
4101	0437	010677	74	PONT	VENT	6	350	2	1	GM201	1	22	725	650	25	30	+12	+10	3500	12.3	1	78	65	29.95
4102	0222	092976	74	DATS	710	4	119	2	4	4	2	13	825	800	52	52	+12	+12	2750	9.9	2	75	62	29.84
4103	0180	090976	74	TOYO	CORO	4	97	2	4	2TC	1	11	975	850	61	52	+07	+10	2500	10.3	2	71	61	29.85
4104	0250	092976	74	TOYO	CELI	4	120	2	5	18RC	1	13	950	650	44	52	+07	+07	2750	10.9	1	77	65	29.88
4105	0198	091576	74	VOLK	SEDA	4	97	1	4	1	2	11	400	850	56	47	-05	-05	2000	9.1	1	71	60	29.83
4106	0245	100676	74	VOLK	SEDA	4	97	1	4	1	2	11	825	850	55	47	-05	-05	2250	8.8	2	80	63	29.85
3107	0301	102776	73	AMC	HORN	6	258	1	1	I	1	16	675	550	30	32	+12	+03	3000	10.3	2	73	60	29.98
3108	0024	052476	73	BUIC	REGA	8	455	4	1	GM402	1	22	670	650	32	30	+08	+04	4000	13.2	1	70	59	29.90
3109	0215	092976	73	BUIC	REGA	8	350	2	1	GM401	1	22	725	650	30	30	+05	+04	4000	13.2	1	74	63	29.74
3110	0355	111576	73	CADI	COUP	8	472	4	1	GM501	1	27	725	600	30	30	+11	+08	5000	14.7	1	75	63	29.99
3111	0240	093076	73	CHEV	VEGA	4	140	1	1	GM101	1	11	825	750	19	32	+11	+12	2500	9.4	2	76	62	29.89
3112	0205	092376	73	CHEV	MONT	8	350	2	1	GM104	1	26	625	600	25	30	+06	+08	4000	13.2	1	74	62	29.88
3113	0204	092376	73	CHEV	NOVA	8	350	2	1	GM104	1	21	690	600	31	30	+06	+08	3500	11.2	2	72	60	29.86
3114	0276	101976	73	CHEV	IMPA	8	350	2	1	GM104	1	26	675	600	30	30	+10	+08	4500	14.0	1	74	63	29.82
3115	0176	090876	73	CHEV	CAPR	8	400	2	1	GM104	1	26	600	600	30	30	+08	+08	4500	14.0	1	74	64	29.63
3116	0381	113076	73	DODG	DART	6	225	1	1	RG	1	16	700	750	99	99	000	000	3000	11.3	1	75	60	30.13
3117	0101	071276	73	FORD	PINT	4	122	2	4	2.0	1	11	750	750	36	40	+06	+06	2750	9.9	2	72	61	29.87
3118	0203	092376	73	FORD	TORI	8	351	2	1	351C	1	23	675	650	33	27	+06	+06	4000	13.2	1	74	63	24.89
3119	0040	060176	73	FORD	MAVE	8	302	2	1	302	1	15	575	650	31	27	+04	+06	3000	10.3	2	72	62	29.79
3120	0285	102176	73	FORD	STAW	8	429	2	1	429-460	1	21	725	650	99	28	+15	+14	5000	14.7	1	72	62	29.87
3121	0105	071576	73	FORD	TORI	8	351	2	1	351W	1	23	510	600	30	28	000	+10	4000	13.2	1	74	62	29.95
3122	0210	092776	73	MERC	MONT	8	400	2	1	400	1	22	775	650	30	30	+13	+06	4500	14.0	1	72	60	29.84
3123	0346	110876	73	OLDS	STAW	8	455	4	1	GM302	1	22	700	650	46	30	+16	+08	5500	15.3	1	73	61	29.71
3124	0255	101276	73	OLDS	CUTL	8	350	4	1	GM301	1	22	670	650	29	30	+14	+12	4000	13.2	1	80	69	29.87
3125	0374	112476	73	PLYM	VALI	6	225	1	1	RG	1	16	700	750	99	99	000	000	3000	11.3	1	76	59	30.11
3126	0094	070276	73	PLYM	DUST	6	225	1	3	RG	2	16	600	750	99	99	+01	000	3000	10.3	2	71	60	29.79
3127	0290	102176	73	PONT	LEMA	8	400	4	1	GM202	1	22	675	650	28	30	+11	+12	4500	14.0	1	71	61	29.90
3128	0185	091476	73	PONT	LEMA	8	350	2	1	GM201	1	22	680	650	29	30	+12	+12	4500	14.0	1	74	62	29.87
3129	0177	082376	73	DATS	1600	4	97	2	4	L16	2	12	875	800	58	52	+08	+08	2500	9.4	2	71	60	29.99
*3130	0333	110576	73	OPEL	MANT	4	116	2	4	GM601	1	12	825	750	52	50	999	999	2500	9.4	2	73	61	29.92
3131	0082	062976	73	TOYO	CORO	4	97	2	4	2TC	2	12	900	750	54	52	+07	+05	2250	8.8	2	76	64	29.78
3132	0160	081176	73	VOLK	SEDA	4	97	1	4	1	2	11	900	900	54	47	-05	-05	2250	8.8	2	70	58	29.93
3133	0121	072276	73	VOLK	SEDA	4	97	1	4	1	2	11	700	950	47	48	+03	-05	2250	8.8	2	73	63	29.82
2134	0035	052776	72	AMC	GREM	6	232	1	1	232-258	2	21	525	600	32	32	+05	+05	2750	09.9	2	76	65	29.87
2135	0070	062276	72	BUIC	SKYL	8	350	2	1	GM401	1	20	550	650	31	30	000	+04	4000	13.2	1	77	64	29.83
2136	0338	110176	72	CADI	FLEE	8	472	4	1	GM501	1	27	920	650	30	30	+03	+08	5000	14.7	1	74	63	29.81
2137	0150	080976	72	CHEV	VEGA	4	140	2	1	GM101	2	11	680	700	24	32	+16	+08	2500	9.4	2	76	62	29.86
2138	0321	102976	72	CHEV	MALI	8	350	2	1	GM104	2	19	680	600	29	30	+08	+06	3500	12.3	1	74	61	29.96
2139	0348	111176	72	CHEV	MONT	8	350	2	1	GM104	1	19	1025	600	30	30	+08	+08	4000	12.0	2	74	63	29.95
2140	0298	102076	72	CHEV	NOVA	8	307	2	3	GM103	2	16	740	900	24	30	+06	+04	3500	11.2	2	77	63	29.88
2141	0326	102976	72	CHEV	IMPA	8	350	2	1	GM104	1	24	750	600	40	30	+08	+06	4500	14.0	1	73	61	29.87
2142	0335	110376	72	CHEV	STAW	8	400	2	1	GM104	1	23	625	600	30	30	+04	+06	5000	14.7	1	73	63	29.97
2143	0109	071676	72	DODG	CORO	8	318	2	1	LA	1	21	825	700	99	99	+02	000	4000	13.2	1	73	60	29.90
2144	0244	100176	72	FORD	PINT	4	122	2	4	2.0	2	11	750	750	36	38	+11	+06	2500	9.4	2	72	66	29.87
2145	0130	072876	72	FORD	TORI	8	302	2	1	302	1	18	575	600	38	28	+06	+06	4000	13.2	1	71	60	29.96
2146	0371	111276	72	FORD	MUST	6	250	1	1	250	2	16	450	600	45	37	+06	+06	3000	10.3	2	73	62	29.98
2147	0421	120676	72	FORD	STAW	8	400	2	1	400	1	20	600	650	27	28	+08	+06	4500	14.0	1	75	64	29.76
2148	0264	101576	72	FORD	STAW	8	400	2	1	400	1	22	600	650	32	28	000	+06	4500	14.0	1	82	71	29.87
2149	0289	102276	72	MERC	MONG	8	400	2	1	400	1	20	700	650	28	28	+06	+06	4000	13.2	1	75	63	30.00
2150	0046	060776	72	OLDS	DELT	8	350	4	1	GM301	1	25	625	600	30	30	+15	+12	4500	14.0	1	77	64	29.84

*NOTE: Vehicle 3130 uses a timing mark for reference; therefore, ignition timing is not reported.

APPENDIX A

LISTING OF VEHICLE AND TEST PARAMETERS

CALIFORNIA

VEH	RUN	DATE	YR	MAKE	MODL	C	CID	V	T	FAM	A	FT	IRPM	IRPMS	DW	DWS	IGN	IGNS	INRT	RLHP	L	DB	WB	BAROM
2151	0077	062876	72	PLYM	DUST	6	225	1	1	RG	1	16	675	700	39	43	+04	+03	3000	10.3	2	74	64	29.78
2152	0372	111076	72	PLYM	SATE	8	400	2	1	400B	1	21	1050	700	43	30	+04	+05	3500	12.3	1	72	60	30.00
2153	0132	072976	72	PONT	CATA	8	400	2	1	GM201	1	23	650	650	30	30	+10	+10	5000	14.7	1	73	62	30.01
2154	0230	093076	72	PONT	BONN	8	455	2	1	GM201	1	25	625	650	99	99	+04	+10	4500	12.7	2	73	62	29.87
2155	0092	062876	72	DATS	510	4	71	2	4	L16	2	12	775	700	50	52	+07	+07	2250	8.8	2	74	63	29.75
2156	0194	091576	72	TOYO	CORO	4	120	2	1	18RC	1	14	975	650	50	52	+10	+07	2750	9.9	2	70	59	29.84
2157	0266	101876	72	VOLK	SEDA	4	97	1	4	1	2	11	1000	850	46	48	+07	-05	2000	8.3	2	73	63	29.87
2158	0341	110976	72	VOLK	SEDA	4	97	1	4	1	2	11	950	900	58	48	-05	-05	2250	8.8	2	75	64	29.87
1159	0296	102676	71	BUIC	LESA	8	455	4	1	GM402	1	25	700	600	31	30	000	+04	4500	14.0	1	75	61	29.91
1160	0182	091076	71	BUIC	SKYL	8	350	2	1	GM401	1	20	525	600	27	30	+10	+10	3500	11.2	2	70	60	29.87
1161	0322	110276	71	CHEV	VEGA	4	140	1	1	GM101	1	11	1050	550	30	32	+14	+06	2500	9.4	2	74	61	29.96
1162	0287	102176	71	CHEV	MONT	8	350	2	1	GM104	1	19	700	550	41	30	+04	+06	4000	13.2	1	75	67	29.85
1163	0304	102676	71	CHEV	CAMA	8	307	2	1	GM104	2	17	650	550	30	30	+06	+08	3500	11.2	2	71	60	29.97
1164	0376	112976	71	CHEV	KING	8	400	2	1	GM104	1	23	600	550	99	99	+05	+08	5000	14.7	1	75	62	30.15
1165	0382	113076	71	CHEV	MALI	8	327	2	1	GM103	1	19	575	550	29	30	+20	+08	3500	11.2	2	76	61	30.16
1166	0438	011077	71	CHRY	STAW	8	383	4	1	LA	1	23	900	800	27	31	+05	+03	5000	14.7	1	79	68	29.99
1167	0295	102176	71	DODG	CHAR	8	283	4	1	LA	1	21	640	700	30	30	+04	+02	3500	12.3	1	75	61	29.87
1168	0312	102876	71	FORD	PINT	4	122	2	1	2.0	2	12	1400	650	44	50	+20	+06	2250	8.8	2	73	60	30.04
1169	0209	092776	71	FORD	TORI	8	302	2	1	302	1	20	650	600	38	28	000	+06	3500	12.3	1	72	61	29.86
1170	0308	102876	71	FORD	MAVE	6	200	1	1	250	1	16	740	600	33	35	+08	+06	3000	10.3	2	78	66	29.95
1171	0137	080276	71	FORD	CUST	8	351	2	1	351	1	23	620	600	31	27	+06	+06	4000	13.2	1	73	62	29.87
1172	0175	090776	71	FORD	RANC	8	351	2	1	351	1	22	630	600	26	27	+06	+06	4500	14.0	1	72	63	29.76
1173	0112	071676	71	MERC	COUG	8	351	2	1	351	1	20	600	650	31	27	+06	+06	3500	12.3	1	73	62	29.86
1174	0416	121476	71	OLDS	CUTL	6	250	1	1	GM102	2	20	500	500	40	33	+08	+04	3500	12.3	1	78	64	29.93
1175	0017	052076	71	PLYM	DUST	6	225	1	1	RG	1	17	775	750	37	43	+03	000	3000	10.3	2	73	62	29.88
1176	0401	120776	71	PONT	LEMA	8	350	2	1	GM201	1	19	650	650	30	30	+10	+12	3500	12.3	1	78	65	29.89
1177	0214	092876	71	PONT	GRNP	8	350	2	1	GM201	1	24	725	700	29	30	+12	+12	4000	13.2	1	78	66	29.71
1178	0001	051076	71	DATS	510	4	97	2	4	L16	2	12	900	700	44	52	+07	+10	2500	9.4	2	74	61	29.77
1179	0313	102976	71	TOYO	CORO	4	113	2	1	18RC	2	13	1200	650	39	52	+26	+10	2500	9.4	2	76	64	29.99
1180	0207	092476	71	VOLK	SQUA	4	97	0	4	1	2	13	1050	850	44	48	000	000	2500	9.4	2	70	60	29.88
0181	0398	120676	70	AMC	GREM	6	232	1	3	J	2	21	600	600	39	35	+03	+03	2750	9.9	2	74	62	29.90
0182	0294	102576	70	BUIC	ELEC	8	455	4	1	GM402	1	25	600	600	46	30	+03	+06	4500	14.0	1	75	61	29.83
0183	0102	071376	70	CHEV	NOVA	6	250	1	1	GM102	1	17	600	600	30	32	+09	+04	3000	10.3	2	75	64	29.87
0184	0224	100176	70	CHEV	CAME	8	307	2	1	GM103	1	18	700	600	16	30	+08	+08	3500	11.2	2	72	65	29.86
0185	0320	102876	70	CHEV	IMPA	8	350	2	1	GM104	1	22	650	600	28	30	+03	+04	4500	12.7	2	74	62	29.95
0186	0281	102076	70	CHEV	IMPA	8	350	2	1	GM104	1	25	630	600	30	30	+06	+04	4000	13.2	1	74	63	29.82
0187	0426	121076	70	CHEV	NOVA	8	307	2	4	GM301	2	18	600	700	30	30	+12	+02	3000	11.3	1	72	58	29.94
0188	0375	111976	70	DODG	DART	6	225	1	1	RG	1	18	645	700	65	45	000	000	3000	10.3	2	73	60	30.12
0189	0327	102876	70	FORD	MAVE	6	200	1	1	170-200	2	14	525	550	35	38	+06	+06	2750	9.9	2	73	61	29.94
0190	0350	110976	70	FORD	GALA	8	302	2	1	302	2	23	750	600	27	28	+06	+06	4000	13.2	1	75	63	29.98
0191	0368	111276	70	FORD	LTD	8	429	4	1	429-460	1	23	900	600	24	28	+04	+04	4000	12.0	2	71	61	29.91
0192	0331	110576	70	FORD	GALA	8	351	2	1	351C2V	1	23	660	600	30	26	+04	+10	4000	13.2	1	75	62	29.98
0193	0397	120276	70	MERC	MARQ	8	429	4	1	429	1	22	590	600	31	27	+04	+04	4500	14.0	1	71	57	29.98
0194	0095	063076	70	OLDS	98	8	455	4	1	GM302	1	24	525	550	30	30	+05	+08	4500	14.0	1	74	63	29.82
0195	0394	120276	70	PLYM	DUST	8	318	2	1	318LA	1	18	700	700	30	32	+02	000	3000	11.3	1	77	62	30.07
0196	0251	101176	70	PLYM	VALI	8	318	2	1	LA	2	18	750	700	32	32	000	000	3000	10.3	2	78	65	29.85
0197	0419	121376	70	PONT	TEMP	6	250	1	1	GM102	2	22	590	600	31	32	+06	+04	3500	12.3	1	75	62	29.83
0198	0135	073076	70	DATS	510	4	097	2	4	L16	2	12	1000	700	56	52	+10	+10	2500	9.4	2	73	62	29.89
0199	0395	120276	70	TOYO	CORO	4	113	2	4	3RC	2	14	650	650	55	52	+04	+05	2500	9.4	2	77	63	29.98
0200	0263	101576	70	VOLK	VAN	4	97	1	4	1	2	16	850	850	46	46	000	000	3000	10.3	2	75	66	29.96

APPENDIX A

LISTING OF VEHICLE AND TEST PARAMETERS

ST. LOUIS

VEH	RUN	DATE	YR	MAKE	MODL	C	CID	V	T	FAM	A	FT	IRPM	IRPMS	DW	DWS	IGN	IGNS	INRT	RLHP	L	DB	WB	BAROM
7002	5749	052677	76	CHEV	C10	8	350	2	1	GM12J2	1	25	600	600	99	99	+06	+06	4500	14.0	1	73	65	29.34
7003	5752	052677	76	CHEV	C10	8	350	2	1	GM12J2	1	20	520	600	99	99	+04	+06	4500	12.7	2	76	64	29.48
7005	5591	041877	76	DODG	B100	8	318	2	1	FD31825S	2	22	680	750	99	99	+01	+02	4000	12.0	2	73	68	29.46
7007	5832	062177	76	FORD	CLUB	8	302	2	1	302H	2	18	710	700	99	99	+10	+10	4500	12.7	2	72	68	29.56
7008	5836	062277	76	FORD	F150	8	360	2	1	360-390	1	19	600	550	99	99	+06	+06	4000	12.0	2	71	67	29.55
7010	5755	052577	76	TOYO	TRUC	4	140	2	5	20R	2	12	850	850	56	52	+08	+08	2750	9.9	2	79	65	29.60
7011	5728	051777	75	CHEV	C10	8	350	2	1	GM12J23	1	20	660	600	99	99	000	+06	4000	12.0	2	73	68	29.63
7012	5692	050977	75	CHEV	TRUC	8	350	2	1	GM12J23	1	18	600	600	99	99	+06	+06	4000	12.0	2	75	68	29.62
7013	5754	053177	75	CHEV	G10V	8	350	4	1	GM12J43A	2	21	600	600	99	99	+06	+06	4500	14.0	1	71	59	29.66
7014	5549	033077	75	DODG	C100	8	318	2	1	TLA2SCII	1	17	910	750	99	99	+02	+02	4000	12.0	2	75	65	29.52
7015	5492	031577	75	FORD	F100	8	302	2	1	302CAT	1	19	680	650	99	99	+12	+12	4000	12.0	2	80	73	29.23
7016	5503	031877	75	FORD	F100	6	300	2	1	300CAT	2	19	520	550	99	99	+12	+12	4000	12.0	2	75	70	29.64
7017	5761	060277	75	FORD	F100	8	360	2	1	360/390	1	19	520	500	99	99	+04	+06	4000	13.2	1	75	67	29.35
6018	5732	051877	76	AMC	HORN	6	258	1	1	I	2	22	600	550	99	99	+09	+08	3500	11.2	2	74	69	29.52
6019	5745	052577	76	BUIC	STAW	8	350	2	1	GM40J4	1	22	640	600	99	99	+12	+12	4500	14.0	1	71	63	29.46
6020	5839	062377	76	BUIC	SKYL	6	231	2	1	GM40E2Z	1	21	630	600	99	99	+12	+12	3500	12.3	1	72	68	29.48
6021	5764	060677	76	CADI	ELDO	8	500	4	1	GM60V4	1	28	600	600	99	99	+07	+06	5500	15.3	1	71	62	29.53
6022	5614	042377	76	CHEV	IMPA	8	350	2	1	GM10J2	1	26	600	600	99	99	+06	+06	4500	14.0	1	74	60	29.49
6023	5737	052377	76	CHEV	MONT	8	350	2	1	GM10J2	1	22	740	600	99	99	+06	+06	4000	13.2	1	72	65	29.37
6024	5644	042977	76	CHEV	VEGA	4	140	2	1	GM10C2	1	16	760	750	99	99	+11	+12	3000	11.3	1	77	69	29.58
6025	5803	061477	76	CHEV	STAW	8	400	4	1	GM10K4J	1	26	660	600	99	99	+08	+08	5500	15.3	1	74	65	29.63
6026	5607	042177	76	CHEV	ELCA	8	305	2	1	GM10G2	1	26	600	600	99	99	+07	+08	4000	13.2	1	77	62	29.58
6027	5561	040477	76	CHEV	NOVA	6	250	1	3	GM10F1	2	21	680	850	99	99	+03	+06	3500	11.2	2	78	65	29.72
6029	5815	061777	76	DODG	STAW	8	318	2	1	FD31825S	2	18	750	750	99	99	+02	+02	4000	13.2	1	74	67	29.37
6030	5710	051877	76	DODG	ASPE	6	225	1	1	FD22515S	1	18	750	750	99	99	+02	+02	3500	11.2	2	75	68	29.64
6031	5680	050677	76	FORD	MUST	4	140	2	1	2.3	1	13	600	750	99	99	+20	+20	3000	10.3	2	78	63	29.68
6032	5708	051077	76	FORD	STAW	8	400	2	1	351M-400	1	21	620	650	99	99	+08	+08	5000	14.7	1	72	69	29.58
6033	5818	061777	76	FORD	STAW	8	351	2	1	351M400	1	21	600	650	99	99	+05	+04	4500	14.0	1	76	70	29.46
6034	5719	051077	76	FORD	GRAN	6	250	1	1	2501CEF	2	19	580	600	99	99	+12	+12	3500	12.3	1	76	68	29.64
6035	5844	062477	76	FORD	GRAN	8	302	2	1	302A	1	19	820	600	99	99	+06	+06	3500	12.3	1	72	68	29.37
6036	5736	052577	76	FORD	TORI	8	351	2	1	351M/400	1	27	500	650	99	99	+03	+04	4500	14.0	1	76	67	29.42
6037	5843	062477	76	MERC	COME	6	250	1	1	250	1	19	600	600	99	99	+12	+12	3500	12.3	1	78	69	29.36
6038	5788	061077	76	MERC	MONA	6	200	1	1	200A	1	19	600	600	99	99	+12	+12	3500	12.3	1	75	66	29.48
6039	5559	040677	76	OLDS	CUTL	8	260	2	1	GM30H2J	1	22	675	650	99	99	+17	+18	4000	13.2	1	74	65	29.77
6040	5713	050677	76	OLDS	CUTL	8	350	4	1	GM30J4	1	22	540	650	99	99	+22	+20	4000	13.2	1	72	67	29.54
6041	5712	051677	76	OLDS	DELT	8	455	4	1	GM30S4	1	26	480	650	99	99	+20	+16	4500	14.0	1	72	67	29.54
6042	5842	062377	76	PLYM	DUST	6	225	2	3	FD22515S	1	16	800	600	99	99	+12	+12	3500	11.2	2	75	69	29.43
6043	5597	041577	76	PLYM	VOLA	8	318	2	1	FD31825S	1	18	750	750	99	99	+23	+02	3500	12.3	1	78	68	29.62
6044	5683	050477	76	PONT	LEMA	8	350	2	1	GM20K2	1	21	500	650	99	99	+18	+18	4000	13.2	1	76	63	29.70
6045	5667	042977	76	PONT	GRNP	8	400	2	1	GM20K2	1	25	520	650	99	99	+16	+16	4500	14.0	1	76	70	29.23
6046	5608	041877	76	DATS	B210	4	85	2	4	N-081	2	12	920	700	52	52	+10	+10	2250	8.8	2	75	58	29.54
6047	5804	061477	76	DATS	B210	4	85	2	1	N-081	1	12	750	650	51	52	+10	+10	2250	9.7	1	73	65	29.55
6048	5653	050277	76	TOYO	CORO	4	97	2	1	2TC	2	13	1120	850	99	99	+18	+10	2500	9.4	2	73	66	29.55
6049	5669	050477	76	TOYO	CELI	4	133	2	5	20R	1	15	840	850	99	99	+08	+08	3000	11.3	1	72	68	29.38
6050	5641	042677	76	VOLK	SEDA	4	97	0	4	1	2	11	700	875	99	99	-03	-05	2000	8.3	2	74	63	29.66
6051	5787	061077	76	VOLK	RABB	4	97	2	4	32FNC	2	12	1000	925	99	99	+14	-03	2000	8.3	2	72	65	29.46
6201	5771	060677	76	AMC	STAW	8	304	2	1	II	1	22	720	700	99	99	+10	+10	3500	11.2	2	77	63	29.43
6202	5639	042777	76	AMC	HORN	6	258	1	1	I	1	22	600	550	99	99	+08	+08	3500	11.2	2	75	63	29.65
6203	5776	060877	76	AMC	MATA	8	304	2	1	II	1	24	700	700	99	99	+10	+10	4000	13.2	1	72	62	29.45
6204	5616	041977	76	AMC	HORN	6	232	1	3	I	1	22	880	850	99	99	+08	+08	3500	11.2	2	79	61	29.44

APPENDIX A

LISTING OF VEHICLE AND TEST PARAMETERS

ST. LOUIS

VEH	RUN	DATE	YR	MAKE	MODL	C	CID	V	T	FAM	A	FT	IRPM	IRPMS	DW	DWS	IGN	IGNS	INRT	RLHP	L	DB	WB	BAROM
6205	5688	050677	76	BUIC	CNTY	6	231	2	1	GM40F2Z	1	22	610	600	99	99	+13	+12	4000	12.0	2	74	63	29.55
6206	5702	051177	76	BUIC	LASA	8	350	4	1	GM40J4	1	26	600	600	99	99	+10	+12	4500	14.0	1	72	68	29.62
6207	5742	052677	76	BUIC	REGA	8	350	4	1	GM40J4	1	26	600	600	99	99	+10	+12	4000	13.2	1	75	65	29.46
6208	5837	062377	76	BUIC	STAW	8	350	4	1	GM40J4	1	22	620	600	99	99	+12	+12	4500	14.0	1	73	68	29.57
6209	5812	061577	76	BUIC	LESA	8	350	4	1	GM40J4	1	26	600	600	99	99	+12	+12	4500	14.0	1	69	65	29.48
6210	5744	052777	76	BUIC	SKYH	6	231	2	1	GM40E2Z	1	19	520	600	99	99	+08	+12	3000	10.3	2	73	64	29.47
6211	5821	061877	76	BUIC	SKYL	6	231	2	1	GM40E2Z	1	21	550	600	99	99	+12	+12	3500	12.3	1	72	67	29.45
6212	5678	050977	76	CADI	SEVI	8	350	0	1	GM60J0	1	21	550	600	99	99	+10	+10	4500	14.0	1	72	60	29.68
6213	5810	061677	76	CADI	FLEE	8	500	4	1	GMKK60V4	1	28	700	600	99	99	+06	+06	5500	15.3	1	79	69	29.43
6215	5829	062177	76	CADI	DEVI	8	500	4	1	GM60V4	1	28	800	600	99	99	000	+06	5500	15.3	1	73	66	29.52
6216	5789	061177	76	CHEV	CHET	4	97	1	4	GM10W1	1	13	600	800	99	99	+06	+08	2250	8.8	2	74	68	29.35
6217	5432	021577	76	CHEV	CAPR	8	350	2	1	GM10J2	1	26	700	600	99	99	+06	+06	4500	14.0	1	76	61	29.15
6218	5828	062077	76	CHEV	MONT	8	350	2	1	GM10J2	1	22	600	600	99	99	+08	+08	4000	13.2	1	75	65	29.58
6219	5633	042677	76	CHEV	STAW	8	350	2	1	GM10J2	1	22	600	600	99	99	+07	+06	4500	12.7	2	77	64	29.66
6220	5550	040177	76	CHEV	CAMA	6	250	1	1	GM10F1	1	21	540	550	99	99	+13	+12	3500	11.2	2	76	66	29.54
6221	5469	021777	76	CHEV	STAW	8	350	2	1	GM10J2	1	22	500	600	99	99	+06	+06	4500	14.0	1	79	71	29.29
6222	5740	052477	76	CHEV	CAMA	8	305	2	1	GM10G2	1	21	600	600	99	99	+09	+08	4000	13.2	1	75	69	29.50
6223	5430	021077	76	CHEV	CAPR	8	454	4	1	GM10R4	1	26	510	550	99	99	+12	+12	4500	14.0	1	76	59	29.04
6224	5620	042577	76	CHEV	MONT	8	350	2	1	GM10J2	1	22	500	600	99	99	+06	+06	4000	13.2	1	71	59	29.43
6225	5841	062377	76	CHEV	IMPA	8	350	2	1	GM10J2	1	26	580	600	99	99	+06	+06	4500	14.0	1	74	68	29.46
6226	5649	050277	76	CHEV	CAMA	8	305	2	1	GM10G2	1	21	590	600	99	99	+08	+08	4000	13.2	1	79	70	29.57
6227	5560	040677	76	CHEV	MONT	8	350	2	1	GM10J2	1	22	580	600	99	99	+08	+06	4000	13.2	1	77	67	29.80
6228	5672	050477	76	CHEV	VEGA	4	140	2	3	GM10C2	2	16	1125	700	99	99	+10	+10	2750	9.9	2	74	69	29.37
6229	5802	061477	76	CHEV	MONZ	4	140	2	4	GM10C2	1	13	650	700	99	99	+10	+10	3000	10.3	2	72	66	29.65
6230	5679	050577	76	CHEV	MONT	8	350	2	1	GM10J2	1	22	600	600	99	99	+06	+06	4000	13.2	1	75	62	29.68
6231	5730	052377	76	CHEV	CAMA	8	350	2	1	GM10J2	1	21	600	600	99	99	+08	+08	4000	13.2	1	79	68	29.60
6232	5786	061077	76	CHEV	CAMA	8	305	2	1	GM10G2	1	21	600	600	99	99	+08	+08	4000	12.0	2	72	65	29.43
6233	5666	050377	76	CHEV	MALI	8	350	2	1	GM10J2	1	22	580	600	99	99	+06	+06	4000	13.2	1	77	71	29.27
6234	5566	040677	76	CHEV	NOVA	8	305	2	1	GM10G2	1	21	580	600	99	99	+06	+08	4000	12.0	2	78	67	29.73
6235	5480	031677	76	CHEV	CHET	4	140	2	1	GM10W1	1	13	1400	950	99	99	+12	+10	2250	8.8	2	72	65	29.68
6236	5705	051677	76	CHEV	IMPA	8	350	2	1	GM10J2	1	26	650	600	99	99	+06	+06	4500	12.7	2	78	71	29.60
6237	5544	032877	76	CHEV	MALI	8	305	2	1	GM10G2	1	22	600	600	99	99	+06	+06	4000	12.0	2	76	66	29.03
6238	5529	032877	76	CHEV	VEGA	4	140	2	1	GM10C2	2	16	730	600	99	99	+15	+12	3000	10.3	2	76	69	29.32
6239	5440	021777	76	CHEV	NOVA	6	250	1	1	GM10F1	1	21	575	550	99	99	+10	+10	3500	11.2	2	74	64	29.57
6240	5488	031677	76	CHRY	CORD	8	318	2	1	FD31825S	1	26	840	750	99	99	000	+02	4500	14.0	1	72	69	28.83
6241	5609	042077	76	CHRY	NEWY	8	400	4	1	FE4004EM	1	27	810	720	99	99	+09	+10	5000	14.7	1	81	61	29.48
6242	5822	061877	76	DODG	CHAR	8	360	2	1	FD36025S	1	26	700	700	99	99	+06	+06	4000	13.2	1	73	68	29.45
6243	5820	061877	76	DODG	MONA	8	400	2	1	FE4004EM	1	27	750	720	99	99	+10	+10	4500	14.0	1	71	65	29.44
6244	5746	052777	76	DODG	ASPE	6	225	1	1	FD22515S	1	18	1040	750	99	99	+04	+03	3500	11.2	2	75	64	29.46
6245	5756	060277	76	DODG	MONA	8	360	2	1	FD36025S	1	27	900	700	99	99	+06	+06	4500	14.0	1	71	63	29.66
6246	5835	062277	76	DODG	STAW	6	225	1	1	FD22515S	1	18	700	750	99	99	000	+02	4000	12.0	2	73	70	29.60
6247	5735	052377	76	DODG	ASPE	6	225	1	1	FD22515S	1	18	780	750	99	99	+02	+02	3500	11.2	2	78	67	29.47
6248	5675	050477	76	FORD	STAW	8	400	2	1	351M/400	1	21	700	650	99	99	+08	+08	5000	14.7	1	77	63	29.66
6249	5684	051077	76	FORD	ELIT	8	351	2	1	351W	1	27	600	650	99	99	+10	+12	4500	14.0	1	70	60	29.71
6250	5790	061177	76	FORD	MAVE	6	200	1	1	200A	2	13	700	650	99	99	+10	+08	3000	11.3	1	73	66	29.44
6251	5734	052377	76	FORD	THUN	8	460	4	1	460A	1	27	710	650	99	99	+07	+08	5000	14.7	1	76	67	29.50
6252	5676	050577	76	FORD	MUST	4	140	2	4	2.3	1	13	660	850	99	99	+08	+06	3000	10.3	2	77	62	29.64
6253	5437	020377	76	FORD	MAVE	6	250	1	1	2501CEF	2	19	680	600	99	99	+12	+12	3000	10.3	2	75	62	29.39
6254	5376	011977	76	FORD	GRAN	8	302	2	1	302A	1	19	750	650	99	99	+08	+08	3500	11.2	2	75	64	29.67
6255	5716	051977	76	FORD	PINT	4	140	2	4	2.3	1	13	840	850	99	99	+04	+06	2750	10.9	1	77	69	29.46

APPENDIX A

LISTING OF VEHICLE AND TEST PARAMETERS

ST. LOUIS

VEH	RUN	DATE	YR	MAKE	MODL	C	CID	V	T	FAM	A	FT	IRPM	IRPMS	DW	DWS	IGN	IGNS	INRT	RLHP	L	DB	WB	BAROM
6256	5690	051077	76	FORD	ELIT	8	351	2	1	351 1CET	1	27	620	650	99	99	+12	+12	4500	12.7	2	74	66	29.54
6257	5817	061777	76	FORD	STAW	4	140	2	1	2.3	2	14	860	750	99	99	+20	+20	3000	11.3	1	73	68	29.43
6258	5590	041477	76	FORD	GRAN	6	250	1	1	250	1	13	600	600	99	99	+10	+12	3500	12.3	1	74	64	29.46
6259	5594	041577	76	FORD	PINT	4	140	2	4	2.3	1	13	750	850	99	99	000	+06	2750	9.9	2	70	67	29.60
6260	5751	053177	76	FORD	STAW	8	400	2	1	351M/400	1	21	650	650	99	99	+08	+08	5000	14.7	1	74	64	29.47
6261	5599	041977	76	FORD	LTD	8	351	2	1	351M/400	1	24	600	650	99	99	+04	+04	4500	14.0	1	75	65	29.66
6262	5805	061577	76	FORD	THUN	8	460	2	1	460CAT	1	26	590	650	99	99	+07	+08	5000	13.4	2	75	70	29.53
6263	5777	060877	76	FORD	MUST	6	171	2	1	2	1	16	720	700	99	99	+12	+12	3000	10.3	2	72	61	29.57
6264	5778	060877	76	FORD	ELIT	8	400	2	1	351M/400	1	26	600	650	99	99	+18	+18	4500	12.7	2	75	60	29.59
6265	5697	051677	76	FORD	ELIT	8	351	2	1	351W-8	1	27	680	650	99	99	+11	+12	4500	12.7	2	73	69	29.60
6266	5374	011977	76	FORD	GRAN	8	302	2	1	302A	1	19	650	650	99	99	+08	+08	3500	11.2	2	74	60	29.38
6267	5455	030177	76	FORD	PINT	4	140	2	1	2.31CEF	1	14	880	750	99	99	+20	+20	3000	10.3	2	75	67	29.41
6268	5750	053177	76	LINC	MRK4	8	460	4	1	460A	1	27	760	650	99	99	+06	+06	5500	15.3	1	71	64	29.43
6270	5694	051277	76	MERC	MONG	8	351	2	1	351 1CET	1	27	550	650	99	99	+12	+12	4500	14.0	1	73	64	29.56
6271	5782	060977	76	MERC	MARQ	8	400	2	1	2	1	24	650	650	99	99	+12	+12	5000	14.7	1	76	64	29.60
6272	5709	051777	76	MERC	COUG	8	351	2	1	351M/400	1	27	600	650	99	99	+06	+04	4500	14.0	1	73	70	29.63
6273	5798	061377	76	MERC	STAW	8	400	2	1	351M/400	1	21	650	650	99	99	+10	+10	5000	14.7	1	72	65	29.68
6274	5797	061377	76	MERC	MONA	8	302	2	1	302	1	19	500	700	99	99	+07	+06	3500	11.2	2	72	65	29.66
6275	5662	050377	76	OLDS	CUTL	8	350	4	1	GM30J4	1	22	600	650	99	99	+21	+22	4000	13.2	1	78	71	29.25
6276	5443	022477	76	OLDS	CUTL	8	350	2	1	GM30H2J	1	22	540	550	99	99	+15	+22	4000	13.2	1	75	64	29.77
6277	5673	050477	76	OLDS	OMEG	6	250	1	1	GM10F1	1	19	540	550	99	99	+10	+12	3500	11.2	2	74	62	29.55
6279	5757	060277	76	OLDS	STAW	8	455	4	1	GM30S4	1	22	680	650	99	99	+14	+16	5500	15.3	1	73	65	29.66
6280	5637	042677	76	OLDS	CUTL	8	350	4	1	GM30J4	1	22	600	650	99	99	+24	+22	4000	13.2	1	75	63	29.67
6281	5401	012677	76	OLDS	CUTL	8	350	4	1	GM30J4	1	22	580	550	99	99	+20	+22	4000	13.2	1	80	67	29.74
6282	5631	042577	76	OLDS	CUTL	8	350	4	1	GM30J4	1	22	680	650	99	99	+18	+22	4000	13.2	1	78	66	29.56
6283	5813	061577	76	OLDS	NINE	8	455	4	1	GM30S4	1	26	650	650	99	99	+17	+18	5000	14.7	1	73	67	29.49
6284	5463	030177	76	PLYM	VOLA	8	318	2	1	FA3182P	1	18	820	750	99	99	+02	+02	4000	12.0	2	74	71	29.25
6285	5715	051977	76	PLYM	STAW	8	318	2	1	FD31825S	1	18	840	750	99	99	+03	+02	4000	13.2	1	76	69	29.48
6286	5840	062477	76	PLYM	FURY	8	318	2	1	FD31825S	2	26	725	750	99	99	+02	+02	4000	13.2	1	71	67	29.49
6287	5577	040777	76	PLYM	VOLA	6	225	1	1	FD22515S	1	18	700	750	99	99	+05	+02	3500	12.3	1	74	64	29.50
6288	5793	061177	76	PLYM	STAW	8	400	2	1	FD40025S	1	27	900	700	99	99	+12	+10	5000	13.4	2	73	66	29.44
6289	5738	052477	76	PLYM	STAW	6	225	1	1	FD22515S	1	18	740	750	99	99	+02	+02	4000	12.0	2	74	65	29.40
6290	5419	020877	76	PLYM	STAW	6	225	1	1	FD225	1	18	780	750	99	99	+02	+02	4000	12.0	2	73	63	29.81
6291	5508	032177	76	PONT	SUNB	6	231	2	1	GM40E21	1	16	600	600	99	99	+12	+12	3000	10.3	2	72	69	29.72
6292	5589	041477	76	PONT	BONN	8	400	2	1	GM2004	1	26	600	650	99	99	+19	+16	4500	14.0	1	74	64	29.43
6293	5706	051177	76	PONT	GRNP	8	350	2	1	GM20K2	1	25	600	650	99	99	+12	+16	4500	14.0	1	76	71	29.57
6294	5525	031777	76	PONT	LEMA	8	260	2	1	GM30H2J	1	21	620	550	99	99	+20	+18	4000	12.0	2	74	69	29.22
6295	5464	020977	76	PONT	CATA	8	455	4	1	GM2004	1	22	550	650	99	99	+17	+16	4500	14.0	1	74	71	29.18
6296	5626	042577	76	PONT	FIRE	8	350	2	1	GM20K2	1	22	620	650	99	99	+16	+16	4000	13.2	1	78	66	29.34
6297	5748	053177	76	PONT	GRNP	8	350	2	1	GM20K2	1	25	640	650	99	99	+17	+16	4500	14.0	1	74	63	29.40
6298	5397	020277	76	PONT	VENT	6	250	1	1	GM10F1	2	19	580	550	99	99	+10	+10	3500	11.2	2	76	64	29.49
6299	5785	060877	76	CAPR	COUP	6	171	2	4	2.8	1	15	700	950	99	99	+08	+08	2750	9.9	2	71	64	29.46
6300	5671	050577	76	DODG	COLT	4	98	2	4	4G3-F	1	14	950	950	99	99	-05	-05	2500	9.4	2	73	68	29.37
6301	5670	050577	76	DATS	B210	4	85	2	4	N-081	1	11	760	700	99	99	+08	+10	2250	8.8	2	73	68	29.37
6302	5825	061877	76	DATS	STAW	4	119	2	4	N-091	1	12	750	750	99	99	+12	+12	2750	9.9	2	75	68	29.46
6303	5718	052077	76	DATS	B210	4	85	2	4	N-081	1	11	700	700	58	52	+10	+10	2250	8.8	2	74	67	29.67
6304	5795	061177	76	FIAT	128	4	79	2	4	128	2	10	850	850	58	55	000	000	2250	8.8	2	73	66	29.58
6305	5824	061777	76	FIAT	131	4	107	2	5	132	2	12	820	850	99	99	+01	000	2750	9.9	2	73	68	29.47
6306	5704	051277	76	HOND	CIVI	4	76	2	4	76EB	2	11	1000	800	52	52	+07	+07	2000	8.3	2	76	70	29.64
6307	5534	033077	76	HOND	ACCO	4	98	1	5	76ED1	2	11	950	800	57	52	+04	+02	2250	8.8	2	76	71	29.76

APPENDIX A

LISTING OF VEHICLE AND TEST PARAMETERS

ST. LOUIS

VEH	RUN	DATE	YR	MAKE	MODL	C	CID	V	T	FAM	A	FT	IRPM	IRPMS	DW	DWS	IGN	IGNS	INRT	RLHP	L	DB	WB	BAROM
6308	5823	061777	76	MAZD	RX4	4	80	4	5	FREP	1	17	925	700	59	58	+19	+20	3000	10.3	2	74	69	29.51
6309	5758	060277	76	TOYO	CORO	4	97	2	4	2T-C	1	13	1400	850	99	99	+12	+10	2500	9.4	2	73	65	29.70
6310	5635	042877	76	TOYO	CORO	4	97	2	1	2T-C	1	13	800	850	99	99	+08	+10	2500	9.4	2	79	66	29.65
6311	5542	040177	76	TOYO	CELI	4	133	2	5	20R	2	15	920	850	99	99	+05	+08	3000	10.3	2	72	63	28.95
6312	5661	050377	76	TOYO	CORO	4	97	2	1	2FC	1	13	825	850	99	99	+10	+10	2500	9.4	2	75	70	29.23
6313	5834	062177	76	VOLK	RABB	4	97	2	4	32NC	2	11	1300	925	99	99	+03	+03	2000	8.3	2	74	69	29.60
6314	5627	042577	76	VOLK	RABB	4	97	2	1	32F	1	11	860	925	99	99	-03	-03	2000	8.3	2	79	67	29.31
6315	5741	052577	76	VOLK	RABB	4	97	2	4	32F	2	12	1060	925	99	99	000	+03	2000	8.3	2	75	66	29.48
6316	5807	061577	76	VOLV	264G	6	163	0	1	B27FF2	1	16	840	900	99	99	+10	+10	3500	12.3	1	79	69	29.55
5052	5509	032177	75	AMC	GREM	6	258	1	1	I	1	21	700	550	99	99	+05	+03	3000	10.3	2	74	70	29.73
5053	5410	012777	75	BUIC	STAW	8	350	4	1	GM40J43	1	22	600	600	99	99	+10	+12	4500	14.0	1	77	67	29.79
5054	5698	051077	75	BUIC	ELEC	8	455	4	1	GM40S4	1	26	600	600	99	99	+08	+12	5000	14.7	1	75	70	29.59
5055	5779	060777	75	CADI	DEVI	8	500	4	1	GM60V43	1	28	600	600	99	99	+06	+06	5500	15.3	1	76	61	29.59
5056	5632	042177	75	CHEV	MONZ	4	140	1	3	GM10CM	2	16	990	700	99	99	+10	+08	3000	10.3	2	76	65	29.61
5057	5495	031677	75	CHEV	MONT	8	350	2	1	GM10J23	1	22	620	600	99	99	+06	+06	4000	13.2	1	73	68	29.66
5058	5515	031877	75	CHEV	MALI	8	350	2	1	GM10J23	1	22	570	600	99	99	+04	+06	4000	12.0	2	76	70	29.57
5059	5781	060977	75	CHEV	STAW	8	400	4	1	GM10K43A	1	26	650	600	99	99	+09	+08	5500	15.3	1	74	63	29.60
5060	5583	041377	75	CHEV	CAMA	6	250	1	3	GM10F13	2	21	940	850	99	99	+10	+10	3500	11.2	2	75	65	29.55
5061	5763	060377	75	CHRY	CORD	8	360	2	1	FLA2LCII	1	26	980	700	99	99	+08	+06	4500	14.0	1	76	65	29.45
5062	5796	061377	75	DODG	DART	8	318	2	1	FLA2-6C	2	16	650	750	99	99	+04	+02	3500	12.3	1	70	65	29.59
5063	5426	012477	75	FORD	PINT	4	140	2	4	2.3A	2	13	750	750	99	99	+06	+06	2750	9.9	2	75	63	29.01
5064	5543	032577	75	FORD	MAVE	8	302	2	1	302A	1	16	540	650	99	99	+04	+06	3500	12.3	1	73	65	29.02
5065	5826	062077	75	FORD	LTD	8	400	2	1	400	1	24	780	700	99	99	+04	+06	4500	14.0	1	72	63	29.62
5066	5496	031577	75	FORD	GRAN	6	250	1	1	250CAT	1	19	600	600	99	99	+06	+06	3500	11.2	2	76	69	29.74
5067	5442	021777	75	FORD	GRAN	8	302	2	1	3021CMF	1	19	690	650	99	99	+07	+08	3500	11.2	2	73	63	29.78
5068	5452	022877	75	MERC	MONG	8	351	2	1	351W1CET	1	27	720	650	99	99	+02	+06	4500	14.0	1	74	66	29.18
5069	5478	030977	75	OLDS	CUTL	8	350	4	1	GM30J43	1	22	550	650	99	99	+19	+20	4000	13.2	1	78	68	29.80
5070	5460	022877	75	OLDS	98	8	455	4	1	GM30S43	1	22	600	650	99	99	+15	+16	5000	14.7	1	75	68	29.43
5071	5733	052077	75	PLYM	VALI	6	225	1	1	FRG5SS	2	16	920	750	99	99	000	000	3500	11.2	2	70	67	29.50
5072	5689	050977	75	PLYM	VALI	8	318	2	1	F-LA2P-C	1	16	720	750	99	99	+02	+02	3500	11.2	2	72	64	29.55
5073	5540	033077	75	PONT	CATA	8	400	2	1	GM20K23	1	26	700	650	99	99	+08	+16	4500	14.0	1	76	67	29.37
5074	5528	032877	75	PONT	FIRE	8	350	2	1	GM20K23	1	20	520	600	99	99	+19	+16	4000	13.2	1	70	69	29.15
5075	5800	061477	75	DATS	B210	4	85	2	1	N-081	2	12	650	650	99	99	+10	+10	2250	8.8	2	74	65	29.63
5076	5611	041977	75	TOYO	CELI	4	133	2	5	20R	2	13	860	850	99	99	+08	+08	2750	10.9	1	76	60	29.49
5077	5461	021677	75	TOYO	CORO	4	97	2	4	2T-C	1	10	850	850	99	99	+10	+12	2500	9.4	2	73	68	29.33
5078	5665	050277	75	VOLK	SCIR	4	90	1	4	32	1	12	1000	950	50	47	000	-03	2250	8.8	2	76	69	29.26
5317	5617	041977	75	AMC	MATA	8	304	2	1	304	1	25	560	700	99	99	+05	+05	4000	13.2	1	77	61	29.46
5318	5431	021577	75	BUIC	SKYH	6	231	2	4	GM40E23	1	19	1100	800	99	99	+12	+12	3000	10.3	2	75	59	29.11
5320	5610	042377	75	CHEV	MONZ	4	140	1	3	GM10C11	2	16	850	700	99	99	+07	+08	3000	10.3	2	77	60	29.48
5321	5640	042877	75	CHEV	IMPA	8	350	2	1	GM10J23	1	22	775	600	99	99	+16	+06	4500	14.0	1	74	63	29.64
5322	5827	062077	75	CHEV	STAW	8	350	2	1	GM10J23	1	18	675	600	99	99	+04	+06	4500	12.7	2	74	64	29.59
5323	5504	032177	75	CHEV	CAMA	8	350	2	1	GM10J23	1	21	600	600	99	99	+07	+06	4000	13.2	1	73	70	29.69
5324	5831	062177	75	CHEV	IMPA	8	400	4	1	GM10K43A	1	26	500	600	99	99	+10	+08	4500	14.0	1	71	66	29.50
5325	5524	032377	75	DODG	DART	8	318	2	1	FLA2PC	1	16	720	750	99	99	+03	+02	3500	11.2	2	73	71	29.18
5326	5814	061677	75	FORD	MUST	4	140	2	1	2.3A	2	13	650	750	99	99	+05	+08	3000	11.3	1	77	69	29.48
5327	5598	041877	75	FORD	LTD	8	400	2	1	351M400E	1	24	740	700	99	99	+06	+06	4500	14.0	1	72	65	29.64
5328	5703	051677	75	FORD	LTD	8	351	2	1	351M/400	1	24	690	650	99	99	+06	+08	4500	12.7	2	75	70	29.66
5329	5762	060377	75	LINC	MRK4	8	460	4	1	460-1CET	1	24	660	650	99	99	+12	+14	5500	15.3	1	73	64	29.37
5330	5392	012577	75	MERC	COUG	8	351	2	1	351W	1	27	690	650	99	99	+06	+06	4500	14.0	1	71	60	29.31
5331	5420	020977	75	OLDS	CUTL	8	260	2	1	GM30H23E	1	22	430	650	99	99	+14	+18	4000	12.0	2	75	59	28.94

APPENDIX A

LISTING OF VEHICLE AND TEST PARAMETERS

ST. LOUIS

VEH	RUN	DATE	YR	MAKE	MODL	C	CID	V	T	FAM	A	FT	IRPM	IRPMS	DW	DWS	IGN	IGNS	INRT	RLHP	L	DB	WB	BAROM
5332	5457	030877	75	OLDS	CUTL	8	350	4	1	GM30J43	1	22	580	650	99	99	+20	+20	4000	13.2	1	72	67	29.04
5333	5510	032177	75	PLYM	FURY	8	318	2	1	FLA26C	1	25	900	750	99	99	+08	+02	4000	13.2	1	78	72	29.60
5334	5714	051977	75	PONT	GRNP	8	400	2	1	GM20K43	1	25	820	650	99	99	+16	+16	4500	14.0	1	74	67	29.48
5335	5579	041377	75	DATS	710	4	119	2	4	N091	1	13	950	750	99	99	+12	+12	2750	9.9	2	72	63	29.51
5336	5625	042677	75	FIAT	131	4	107	2	1	132	1	12	700	750	58	55	-05	000	2750	9.9	2	78	65	29.37
5337	5538	032977	75	HOND	CVCC	4	91	3	5	ED-1	2	11	1040	850	55	52	-04	000	2000	8.3	2	75	71	29.61
5338	5551	032977	75	MAZD	STAW	1	70	4	4	REPL	1	14	1000	850	60	58	+12	+15	2750	10.9	1	75	66	29.75
4080	5182	102976	74	AMC	AMBA	8	360	2	1	II	1	25	600	700	30	30	+03	+05	4000	13.2	1	74	66	29.30
4081	5556	040577	74	BUIC	CNTY	8	350	4	1	GM4014A	1	22	550	650	20	30	+11	+04	4000	13.2	1	79	67	29.71
4082	5365	011277	74	CADI	DEVI	8	472	4	1	GM501	1	28	680	600	32	30	+08	+10	5500	15.3	1	73	68	29.66
4083	5154	101276	74	CHEV	VEGA	4	140	1	1	GM101-2	1	16	850	800	27	32	+21	+12	2750	99.9	2	72	62	29.54
4084	5109	092976	74	CHEV	CHEL	8	350	2	1	GM104	1	22	500	600	27	30	+08	+08	4000	13.2	1	73	68	29.40
4085	5093	092276	74	CHEV	NOVA	6	250	1	1	GM102	2	21	520	600	30	33	+10	+06	3500	11.2	2	72	64	29.50
4086	5168	101976	74	CHEV	NOVA	8	350	2	1	GM104	1	21	650	600	28	30	+05	+08	3500	11.2	2	74	65	29.75
4087	5269	112276	74	CHEV	CHEL	8	350	2	1	GM104-2	1	22	660	600	32	30	+06	+08	4000	12.0	2	76	69	29.53
4088	5364	011077	74	CHEV	STAW	8	400	4	1	GM104	1	26	725	600	27	30	+04	+08	5000	14.7	1	74	69	29.89
4089	5311	121476	74	CHRY	NEWP	8	400	2	1	B	1	27	800	750	99	99	+07	+10	4500	14.0	1	74	68	29.71
4090	5634	042777	74	DODG	CHAR	8	318	2	1	LA-2	1	20	700	750	99	99	000	000	4000	13.2	1	77	64	29.69
4091	5343	122976	74	FORD	PINT	4	122	2	4	2.0	2	13	1010	750	41	38	+12	+06	2750	9.9	2	75	69	29.66
4092	5328	121076	74	FORD	TORI	8	302	2	1	302	1	27	520	650	32	27	+04	+10	4000	13.2	1	74	67	29.27
4093	5575	041277	74	FORD	PINT	4	140	2	1	2.3	2	13	760	800	47	38	+05	+06	2750	9.9	2	71	64	29.56
4094	5354	010677	74	FORD	STAW	8	400	2	1	400	1	22	660	625	99	99	+10	+12	5000	14.7	1	76	71	29.52
4095	5163	101476	74	FORD	STAW	8	351	2	1	351C	1	21	540	650	25	27	+10	+14	4500	14.0	1	76	65	29.50
4096	5811	061677	74	MERC	MONT	8	302	2	1	302	1	27	400	650	99	99	+06	+10	4500	14.0	1	73	67	29.48
4097	5035	090776	74	OLDS	CUTL	8	350	4	1	GM301-4	1	22	650	650	32	30	+08	+12	4000	13.2	1	74	62	29.57
4098	5188	110176	74	OLDS	STAW	8	455	4	1	GM302	1	22	675	650	27	30	+18	+08	5500	15.3	1	75	65	29.64
4099	5039	090776	74	PLYM	SCAM	8	318	2	1	LA2	1	20	700	750	99	99	000	000	3500	12.3	1	76	66	29.70
4100	5760	060377	74	PLYM	DUST	6	225	1	1	RG	2	20	675	750	99	99	+02	000	3500	11.2	2	77	69	29.55
4101	5407	013177	74	PONT	GRNP	8	400	4	1	GM202	1	25	800	650	27	30	+13	+12	4500	14.0	1	78	65	29.66
4102	5571	040877	74	DATS	710	4	119	2	1	6	1	12	650	650	50	52	+12	+12	2750	9.9	2	71	62	29.70
4103	5353	010677	74	TOYO	CORO	4	97	2	4	2T-C	1	14	1000	750	57	52	+05	+05	2250	8.8	2	77	71	29.58
4104	5341	010377	74	TOYO	STAW	4	120	2	1	18R-C	1	12	600	800	58	99	+07	+07	2750	10.9	1	75	69	29.36
4105	5149	101376	74	VOLK	SEDA	4	97	1	4	1	2	10	1025	850	48	47	+07	+08	2250	9.7	1	75	65	29.26
4106	5282	120776	74	VOLK	SEDA	4	97	2	4	1	2	11	1050	850	50	50	000	-05	2250	8.8	2	80	72	29.57
4339	5021	081976	74	AMC	HORN	6	258	1	1	I-A	1	16	840	550	22	32	+14	+03	3000	10.3	2	77	67	29.55
4340	5349	010577	74	BUIC	REGA	8	350	2	1	GM401	1	20	600	650	33	30	000	+04	4000	12.0	2	75	70	29.39
4341	5784	060977	74	BUIC	RIVI	8	455	4	1	GM402-4	1	26	500	650	30	30	+04	+04	5000	14.7	1	72	64	29.46
4342	5010	082076	74	CHEV	CHEL	8	350	2	1	GM104-2	2	27	625	600	30	30	+08	+08	4000	12.0	2	75	67	29.38
4343	5004	081976	74	CHEV	MONT	8	350	2	1	GM104-2	2	22	625	600	12	30	+22	+08	4000	12.0	2	74	65	29.47
4344	5142	101276	74	CHEV	CHEL	8	350	2	1	GM104-2	1	22	600	600	26	30	+08	+08	4000	13.2	1	79	67	29.55
4345	5007	082076	74	CHEV	STAW	8	400	2	1	GM104-2	1	26	610	600	28	30	+08	+10	5000	14.7	1	74	67	29.46
4346	5302	121576	74	CHEV	VEGA	4	140	2	1	GM101	1	16	920	500	32	32	+15	+12	2750	9.9	2	74	67	29.39
4347	5106	092476	74	DODG	DART	6	225	1	1	RG	2	16	725	750	99	99	+27	000	3500	11.2	2	76	67	29.38
4348	5013	081976	74	DODG	DART	8	318	2	1	LA2	1	16	615	750	99	99	+02	000	3500	12.3	1	75	66	29.54
4349	5009	081976	74	FORD	TORI	8	351	2	1	351W	1	27	600	600	99	99	+03	+06	4000	12.0	2	76	67	29.40
4350	5016	082776	74	FORD	GALA	8	400	2	1	400	1	22	650	625	99	99	+10	+12	4500	14.0	1	75	67	29.58
4351	5027	090376	74	FORD	LTD	8	400	2	1	400	1	22	610	625	99	99	+14	+12	4500	14.0	1	75	69	29.45
4352	5138	100776	74	FORD	MUST	4	140	2	1	2.3	2	13	875	750	37	38	+08	+06	3000	10.3	2	80	68	29.45
4353	5707	051677	74	LINC	MRK4	8	460	4	1	460	1	27	600	650	99	99	+13	+14	5500	15.3	1	72	68	29.56
4354	5115	100476	74	MERC	MONG	8	351	2	1	351C	1	27	650	650	99	99	+12	+14	4500	14.0	1	69	64	29.32

APPENDIX A

LISTING OF VEHICLE AND TEST PARAMETERS

ST. LOUIS

VEH	RUN	DATE	YR	MAKE	MODL	C	CID	V	T	FAM	A	FT	IRPM	IRPMS	DW	DWS	IGN	IGNS	INRT	RLHP	L	DB	WB	BAROM
4355	5008	081976	74	OLDS	CUTL	8	350	4	1	GM301-4	1	22	525	650	28	30	+07	+12	4000	13.2	1	75	67	29.42
4356	5037	090776	74	PLYM	FRY3	8	360	2	1	LA2	1	25	850	750	99	99	+05	+05	4500	14.0	1	76	62	29.54
4357	5005	082076	74	PONT	BONN	8	400	2	1	GM201	1	26	625	650	30	30	+13	+12	4500	14.0	1	74	65	29.41
4358	5231	111576	74	PONT	LEMA	8	350	2	1	GM201	1	22	640	650	30	30	+12	+12	4000	13.2	1	75	67	29.64
4359	5636	042877	74	CAPR	SPOR	4	122	2	4	2.0L	2	12	750	750	41	39	+08	+06	2500	9.4	2	77	64	29.66
4360	5024	082776	74	DATS	B210	4	79	2	4	5	2	12	950	800	49	52	+08	+05	2250	8.8	2	76	66	29.52
4361	5773	060677	74	MAZD	STAW	4	70	4	1	TOYO-4	1	17	1400	1000	60	58	-07	-05	3000	10.3	2	76	65	29.35
3107	5204	110476	73	AMC	GREM	6	232	1	3	232-258	1	21	500	700	32	33	+04	+03	3000	10.3	2	75	65	29.58
3108	5213	110876	73	BUIC	CNTR	8	455	4	1	GM402	1	26	675	650	25	30	+08	+04	4500	14.0	1	74	65	29.40
3109	5250	112376	73	BUIC	CNTY	8	350	2	1	GM401	1	22	585	650	23	30	+02	+04	4000	13.2	1	76	69	29.60
3110	5312	121576	73	CADI	DEVI	8	472	4	1	GM501	1	28	780	600	32	30	+07	+08	5000	14.7	1	75	66	29.90
3111	5422	012877	73	CHEV	VEGA	4	140	1	4	GM101	1	11	1100	850	38	34	+08	+08	2500	9.4	2	75	66	29.80
3112	5130	100676	73	CHEV	MONT	8	350	2	1	GM104	1	22	525	600	19	30	+08	+08	4000	13.2	1	73	62	29.66
3113	5123	100476	73	CHEV	CAMA	8	350	2	1	GM104	1	18	625	600	25	30	+09	+08	3500	11.2	2	72	61	29.70
3114	5190	110176	73	CHEV	IMPA	8	350	2	1	GM104	1	26	545	600	32	30	+06	+08	4500	14.0	1	74	66	29.63
3115	5214	110576	73	CHEV	IMPA	8	350	2	1	GM104	1	26	500	600	99	30	+02	+08	4500	14.0	1	75	66	29.30
3116	5220	110876	73	DODG	DART	6	225	1	1	RG	1	16	650	750	99	44	+02	000	3000	11.3	1	75	65	29.71
3117	5558	040677	73	FORD	PINT	4	122	2	1	2.0L	2	11	640	650	40	37	+10	+09	2750	9.9	2	81	71	29.64
3118	5137	101176	73	FORD	TORI	8	351	2	1	351C	1	20	575	625	26	28	+05	+08	4000	13.2	1	76	66	29.54
3119	5139	100776	73	FORD	MUST	8	302	2	1	302	1	20	625	650	30	28	+06	+06	3500	11.2	2	74	64	29.46
3120	5248	111976	73	FORD	TORI	8	351	2	1	351C	1	23	575	600	28	28	-05	+06	4000	13.2	1	75	69	29.72
3121	5244	111876	73	FORD	STAW	8	400	2	1	400	1	21	760	625	28	26	+08	+06	5000	14.7	1	74	67	29.48
3122	5257	112476	73	MERC	MONG	8	400	2	1	400	1	23	500	600	30	28	000	+06	4000	13.2	1	76	68	29.78
3123	5355	010777	73	OLDS	TORO	8	455	4	1	GM302	1	26	565	650	33	30	+04	+08	5000	14.7	1	77	72	29.49
3124	5098	092476	73	OLDS	CUTL	8	350	4	1	GM301	1	22	550	650	28	30	+15	+12	4000	13.2	1	72	65	29.46
3125	5118	100576	73	PLYM	SATE	8	318	2	1	LA	1	20	725	700	33	32	000	000	4000	13.2	1	70	60	29.53
3126	5729	052077	73	PLYM	VALI	8	318	2	1	LA	1	16	700	700	99	99	000	000	3500	11.2	2	74	67	29.64
3127	5308	121576	73	PONT	GRNV	8	400	2	1	GM202	1	25	650	650	31	30	+10	+12	4500	14.0	1	73	67	29.59
3128	5232	111576	73	PONT	LEMA	8	350	2	1	GM201	1	22	750	650	26	30	+12	+12	4000	13.2	1	75	67	29.77
3129	5324	121476	73	DATS	STAW	4	97	2	4	L16	1	10	920	800	59	52	+05	+08	2750	9.9	2	76	69	29.15
3130	5691	051077	73	OPEL	STAW	4	116	2	1	GM-601	2	12	960	825	47	50	-03	-03	2500	9.4	2	74	67	29.56
3131	5385	012477	73	TOYO	CARI	4	97	2	1	2T-C	2	12	720	650	60	52	+09	+05	2500	9.4	2	73	63	29.37
3132	5630	042677	73	VOLK	SEDA	4	103	2	4	2	2	11	800	850	52	47	-05	-05	2000	8.3	2	79	69	29.33
3133	5256	112376	73	VOLK	SEDA	4	97	1	4	1	2	11	1020	850	40	50	+05	+05	2250	8.8	2	77	68	29.77
3362	5254	112376	73	BUIC	CNTY	8	350	2	1	GM401	1	22	650	650	31	30	+04	+04	4000	13.2	1	74	67	29.75
3363	5170	102276	73	BUIC	RIVE	8	455	4	1	GM402	1	26	650	650	32	30	+01	+04	5000	14.7	1	75	65	29.94
3364	5014	082376	73	CHEV	STAW	8	400	2	1	GM104	1	26	675	600	28	30	+15	+06	5000	14.7	1	76	66	29.47
3365	5019	082376	73	CHEV	VEGA	4	140	2	1	GM101	2	11	750	700	30	32	+14	+12	2500	9.4	2	75	66	29.59
3366	5209	110476	73	CHEV	NOVA	6	250	1	1	GM102	2	21	650	600	32	33	+09	+06	3500	11.2	2	76	66	29.51
3367	5183	102776	73	CHEV	IMPA	8	350	2	1	GM104	1	26	600	600	28	30	+08	+08	4500	14.0	1	74	64	29.78
3368	5400	012877	73	CHEV	CAMA	8	307	2	1	GM103	1	18	580	600	27	30	+10	+08	3500	12.3	1	77	64	29.76
3369	5012	082376	73	CHEV	STAW	8	454	4	1	GM105	1	26	630	600	25	30	+14	+10	5000	14.7	1	73	67	29.43
3370	5148	100676	73	CHRY	NEWP	8	400	4	1	B	1	27	600	700	99	99	+06	+08	4500	14.0	1	77	66	29.25
3371	5023	082776	73	DODG	CHAR	8	318	2	1	LA	1	20	630	700	99	99	-01	000	4000	12.0	2	76	69	29.57
3372	5747	052577	73	DODG	STAW	8	360	2	1	LA	1	23	580	750	99	99	-02	000	5000	14.7	1	74	63	29.43
3373	5301	121376	73	FORD	PINT	4	122	2	4	2.0	2	11	760	750	37	39	+10	+06	2500	9.4	2	74	67	29.44
3374	5180	102176	73	FORD	TORI	8	351	2	1	351C	1	23	685	700	24	28	+09	+10	4000	13.2	1	74	64	29.65
3375	5436	021677	73	FORD	STAW	8	400	2	1	400	1	22	520	625	28	27	+10	+12	5000	14.7	1	76	62	29.35
3376	5660	050377	73	FORD	STAW	8	400	2	1	400	1	22	625	625	26	28	+07	+06	5000	14.7	1	73	67	29.27
3377	5040	090476	73	MERC	MONG	8	302	2	1	302	1	23	680	650	29	27	+10	+06	4000	12.0	2	76	66	29.64

APPENDIX A

LISTING OF VEHICLE AND TEST PARAMETERS

ST. LOUIS

VEH	RUN	DATE	YR	MAKE	MODL	C	CID	V	T	FAM	A	FT	IRPM	IRPMS	DW	DWS	IGN	IGNS	INRT	RLHP	L	DB	WB	BAROM
3378	5285	121076	73	OLDS	DELT	8	350	2	1	GM301	1	26	680	700	29	30	+14	+12	4500	14.0	1	78	71	29.90
3379	5047	091376	73	OLDS	NNTY	8	455	4	1	GM302	1	26	600	650	29	30	+09	+08	5000	14.7	1	74	65	29.58
3380	5227	111176	73	PLYM	FRY3	8	360	2	1	LA360	1	23	610	750	99	99	+02	+05	4000	13.2	1	75	67	29.99
3381	5017	082776	73	PONT	VENT	8	350	2	1	GM201	1	22	600	650	30	30	+13	+12	3500	11.2	2	74	66	29.55
3382	5067	091576	73	PONT	GRNV	8	455	4	1	GM202	1	25	580	650	33	30	+12	+12	4500	14.0	1	76	62	29.38
3383	5121	100576	73	MERC	CAPR	4	122	2	4	2.0	2	12	875	750	39	41	+07	+06	2500	9.4	2	75	63	29.56
3384	5206	110376	73	MAZD	RX3	2	70	4	4	TOY03	1	14	910	1000	52	99	000	000	2500	9.4	2	76	67	29.55
2134	5438	012777	72	AMC	MATA	6	258	1	1	I	1	20	600	600	26	32	+06	+05	3500	11.2	2	71	63	29.68
2135	5313	121776	72	BUIC	ELEC	8	455	4	1	GM402	1	25	690	650	24	30	+06	+04	5000	14.7	1	75	67	29.84
2136	5048	091376	72	CADI	CALA	8	472	4	1	GM501	1	28	600	600	27	30	+09	+08	5000	14.7	1	74	64	29.59
2137	5306	121076	72	CHEV	VEGA	4	140	2	3	GM101	2	11	800	850	31	33	+05	+06	2500	9.4	2	74	67	29.49
2138	5097	092776	72	CHEV	STAW	8	350	4	1	GM104	1	18	575	600	29	30	+07	+06	4000	13.2	1	72	66	29.42
2139	5404	012877	72	CHEV	CHEL	8	350	2	1	GM104	1	19	480	600	26	30	+09	+06	3500	11.2	2	79	66	29.67
2140	5187	102976	72	CHEV	CHEL	8	307	2	1	GM103	1	19	510	600	29	30	+05	+08	3500	11.2	2	74	65	29.68
2141	5112	092976	72	CHEV	STAW	8	350	2	1	GM104	1	23	560	600	30	30	+07	+06	5000	14.7	1	72	70	29.33
2142	5049	091476	72	CHEV	CAPR	8	400	2	1	GM104	1	23	620	600	28	30	-01	+06	4500	14.0	1	74	67	29.59
2143	5360	010777	72	DODG	CHAR	8	318	2	1	LA	1	21	680	750	46	32	-02	000	3500	12.3	1	74	69	29.87
2144	5352	010377	72	FORD	PINT	4	122	2	4	2.0	2	11	1040	750	40	40	+07	+06	2500	9.4	2	73	67	29.64
2145	5217	110976	72	FORD	TORI	8	351	2	1	351C-2V	1	23	420	575	29	28	+03	+06	4000	13.2	1	74	66	29.54
2146	5368	011177	72	FORD	MAVE	6	200	1	1	170-200	2	15	550	550	35	37	+06	+06	2750	9.9	2	75	70	29.46
2147	5166	101376	72	FORD	STAW	8	400	2	1	351C	1	22	635	625	34	28	+06	+08	4500	14.0	1	75	66	29.56
2148	5162	101576	72	FORD	LTD	8	400	2	1	400	1	22	625	625	29	28	000	+08	4500	14.0	1	76	66	29.47
2149	5284	120976	72	MERC	MONR	8	400	2	1	400	1	22	760	625	22	28	+15	+08	4500	14.0	1	76	68	30.02
2150	5283	120976	72	OLDS	CUTL	8	350	4	1	GM301	1	25	610	600	30	30	+02	+12	3500	12.3	1	77	70	29.56
2151	5169	101476	72	PLYM	DUST	6	225	1	1	RG	1	16	675	750	46	44	+04	000	3000	10.3	2	74	65	29.98
2152	5132	100576	72	PLYM	FRY3	8	360	2	1	LA	1	23	480	750	99	99	-01	000	4000	13.2	1	75	63	29.48
2153	5299	121476	72	PONT	GRNV	8	400	2	1	GM201	1	25	760	625	27	30	+10	+15	4500	14.0	1	73	65	29.52
2154	5061	091676	72	PONT	FIRE	8	350	2	1	GM201	1	20	775	625	31	30	+09	+10	3500	11.2	2	73	64	29.55
2155	5356	010577	72	DATS	510	4	97	2	4	L16	2	12	1100	700	57	52	+08	+07	2250	8.8	2	72	67	29.64
2156	5280	120776	72	TOYO	CELI	4	120	2	4	8R-C	2	14	910	650	40	52	+16	+10	2500	9.4	2	74	68	29.82
2157	5239	111676	72	VOLK	SEDA	4	97	1	4	1	2	10	820	850	53	50	000	+05	2000	8.3	2	77	70	29.43
2158	5557	040577	72	VOLK	SEDA	4	97	2	4	1	2	11	1080	850	56	50	+05	+05	2000	8.3	2	75	67	29.64
2385	5318	122076	72	BUIC	STAW	8	350	2	1	GM-401	1	25	740	650	24	30	+05	+04	4500	12.7	2	80	71	28.90
2386	5278	120776	72	BUIC	LESA	8	350	2	1	GM401	1	25	550	650	31	30	+04	+04	4500	14.0	1	77	70	29.83
2387	5146	101276	72	CHEV	VEGA	4	140	2	1	GM101	2	11	550	700	33	33	+19	+06	2500	9.4	2	78	66	29.34
2388	5108	093076	72	CHEV	NOVA	6	250	1	1	GM102	2	16	650	600	38	33	+05	+04	3500	11.2	2	71	66	29.40
2389	5029	090376	72	CHEV	MALI	8	350	2	1	GM104	1	19	560	600	32	30	+04	+06	3500	11.2	2	77	63	29.67
2390	5052	091376	72	CHEV	IMPA	8	350	2	1	GM104	1	18	715	600	26	30	+06	+06	4500	14.0	1	73	64	29.60
2391	5155	101576	72	CHEV	IMPA	8	400	2	1	GM104	1	23	650	600	32	30	-01	+06	4500	14.0	1	73	62	29.75
2392	5379	010777	72	CHRY	NEWP	8	400	2	1	B	1	23	800	700	43	31	+04	+08	4500	14.0	1	78	65	29.93
2393	5359	010677	72	DODG	DEMO	6	225	1	1	RG	1	16	660	750	40	44	000	000	3000	10.3	2	74	69	29.87
2394	5018	082776	72	FORD	PINT	4	122	2	1	2.0	1	11	1200	650	31	38	+28	+06	2500	9.4	2	74	66	29.66
2395	5276	120776	72	FORD	TORI	8	302	2	1	302	1	23	425	600	31	28	000	+06	4000	13.2	1	73	66	29.61
2396	5129	100676	72	FORD	MUST	8	351	2	1	351C	1	22	520	575	33	28	-14	+06	3500	12.3	1	73	61	29.70
2397	5201	110376	72	FORD	GALA	8	429	4	1	429-460	1	22	530	600	99	99	+08	+10	4000	13.2	1	73	64	29.73
2398	5339	010377	72	LINC	MRK4	8	460	4	1	429-460	1	23	680	550	30	28	000	+06	5000	14.7	1	73	67	29.35
2399	5345	010477	72	MERC	MONG	8	302	2	1	302	1	22	660	600	30	28	+04	+06	4000	13.2	1	74	69	29.70
2400	5124	100676	72	OLDS	CUTL	8	350	4	1	GM301-4	1	20	625	600	30	30	+08	+12	3500	12.3	1	76	64	29.69
2401	5095	092876	72	OLDS	STAW	8	455	4	1	GM402	1	23	625	650	28	30	+08	+08	5500	15.3	1	72	65	29.49
2402	5228	111276	72	PLYM	SATE	8	318	2	1	LA	1	21	925	750	99	99	+03	000	3500	12.3	1	76	67	30.04

APPENDIX A

LISTING OF VEHICLE AND TEST PARAMETERS

ST. LOUIS

VEH	RUN	DATE	YR	MAKE	MODL	C	CID	V	T	FAM	A	FT	IRPM	IRPMS	DW	DWS	IGN	IGNS	INRT	RLHP	L	DB	WB	BAROM
2403	5164	101976	72	PONT	STAW	8	400	2	1	GM201	1	26	550	625	18	30	+12	+10	5000	14.7	1	72	63	29.48
2404	5279	110676	72	CAPP	COUP	4	122	2	4	2.0	2	12	740	750	35	38	-01	+06	2500	9.4	2	75	69	29.83
1159	5346	010477	71	BUIC	RIVE	8	455	4	1	GM402	1	25	600	600	33	30	000	+04	4500	14.0	1	75	70	29.71
1160	5304	121676	71	BUIC	SKYL	8	350	2	1	GM401	1	20	660	600	30	30	+10	+10	4000	12.0	2	75	68	29.45
1161	5031	090376	71	CHEV	VEGA	4	140	1	1	GM101	2	11	720	550	32	32	+06	+06	2500	9.4	2	72	60	29.73
1162	5042	090776	71	CHEV	CHEL	8	350	2	1	GM104	1	19	675	550	29	30	+08	+06	3500	12.3	1	73	64	29.65
1163	5315	122076	71	CHEV	NOVA	6	250	1	1	GM102	2	16	600	500	34	33	+02	+04	3500	11.2	2	76	67	29.49
1164	5234	111676	71	CHEV	IMPA	8	350	2	1	GM104	1	24	560	550	28	30	+05	+06	4000	13.2	1	75	67	29.72
1165	5541	032577	71	CHEV	IMPA	8	350	2	1	GM-104	1	18	580	550	24	30	+06	+06	4500	12.7	2	72	68	28.98
1166	5711	051777	71	CHRY	NEWP	8	383	4	1	LA	1	23	940	800	27	30	+04	+03	4500	14.0	1	76	68	29.52
1167	5253	111776	71	DODG	CHAR	8	318	2	1	1	1	21	640	700	32	32	000	000	3500	12.3	1	78	70	29.74
1168	5225	110976	71	FORD	PINT	4	122	2	4	2.0	2	11	750	750	41	40	+01	+06	2250	8.8	2	75	67	29.94
1169	5194	110276	71	FORD	TORI	8	302	2	1	302	1	20	580	600	32	27	+02	+06	3500	12.3	1	73	64	29.55
1170	5069	092076	71	FORD	MAVE	6	200	1	1	170-200	1	15	690	600	32	33	+08	+06	2750	9.9	2	74	61	29.44
1171	5243	111776	71	FORD	GALA	8	351	2	1	351W	1	23	575	575	28	27	+07	+06	4000	13.2	1	75	67	29.30
1172	5171	102176	71	FORD	STAW	8	400	2	1	400	1	22	650	625	30	28	+06	+06	4500	14.0	1	74	65	29.98
1173	5141	101276	71	MERC	COUG	8	351	2	1	351C	1	20	550	600	29	27	+07	+06	3500	12.3	1	73	64	29.54
1174	5240	111676	71	OLDS	CUTL	8	350	4	1	GM301	1	20	600	600	30	30	+10	+12	4000	13.2	1	73	66	29.48
1175	5658	050277	71	PLYM	DUST	6	225	1	1	RG	1	17	780	750	33	44	-05	000	3000	10.3	2	74	67	29.41
1176	5277	120376	71	PONT	CATA	8	350	2	1	GM201	1	24	600	650	32	30	+08	+12	4500	14.0	1	75	68	29.83
1177	5064	091776	71	PONT	LEMA	8	350	2	1	GM201	1	19	680	650	28	30	+10	+12	4000	13.2	1	73	62	29.38
1178	5838	062277	71	DATS	B110	4	97	2	4	A-12	2	12	700	700	54	53	+10	+05	2000	8.3	2	74	68	29.54
1179	5274	120276	71	TOYO	CORO	4	71	2	1	2T-C	1	12	660	650	47	52	-02	+10	2500	9.4	2	75	68	29.57
1180	5271	120276	71	VOLK	SEDA	4	97	1	4	1	1	10	960	850	44	50	+02	-05	2250	8.8	2	73	67	29.53
1405	5119	100176	71	AMC	MATA	8	360	2	1	III	1	20	700	650	30	30	+03	+02	3500	12.3	1	72	60	29.55
1406	5358	011077	71	BUIC	ELEC	8	455	4	1	GM402	1	25	580	600	33	30	000	+04	4500	14.0	1	75	70	29.86
1407	5020	082876	71	CADI	DEVI	8	472	4	1	GM501	1	28	550	600	34	30	+10	+08	5000	14.7	1	75	67	29.56
1408	5184	102876	71	CHEV	MONT	8	350	2	1	GM104	1	19	550	550	29	30	+08	+06	4000	13.2	1	75	66	29.73
1409	5165	101876	71	CHEV	CHEL	8	307	2	1	GM103	1	19	575	550	27	30	+06	+08	3500	11.2	2	75	66	29.52
1410	5259	111976	71	CHEV	CHEL	8	350	2	1	GM104	1	19	540	550	25	30	+08	+06	3500	12.3	1	77	69	29.62
1411	5260	112276	71	CHEV	IMPA	8	350	2	1	GM104	1	18	510	550	35	30	+14	+06	4000	13.2	1	76	68	29.62
1412	5110	100276	71	DODG	DART	6	225	1	1	RG	2	17	470	750	35	44	+01	000	3000	10.3	2	73	67	29.33
1413	5310	121776	71	FORD	MUST	8	302	2	1	302	2	20	600	575	28	27	+05	+06	3500	11.2	2	77	69	29.66
1414	5125	100576	71	FORD	TORI	8	351	2	1	351C	1	20	490	600	34	27	+06	+06	3500	11.2	2	75	63	29.68
1415	5153	101376	71	FORD	LTD	8	351	2	1	351W	1	22	525	575	35	27	+15	+06	4500	14.0	1	73	62	29.46
1416	5065	091576	71	MERC	MONR	8	400	2	1	400	1	23	550	600	30	28	+08	+10	4500	14.0	1	78	64	29.37
1417	5126	100676	71	OLDS	CUTL	8	350	2	1	GM301	1	20	635	600	31	30	+04	+10	4000	12.0	2	74	62	29.66
1418	5073	092076	71	OLDS	CUTL	8	350	2	1	GM301	1	20	675	750	29	30	+27	+12	3500	12.3	1	72	61	29.33
1419	5043	090376	71	PLYM	DUST	8	318	2	1	LA	1	16	725	700	99	99	+02	000	3000	10.3	2	72	65	29.69
1420	5294	121376	71	PLYM	STAW	8	360	2	1	LA	1	23	1000	700	30	32	+13	+03	4500	14.0	1	75	67	29.55
1421	5252	111776	71	PONT	CATA	8	350	2	1	GM201	1	24	600	650	29	30	+08	+12	4500	12.7	2	74	67	29.46
1422	5332	122976	71	VOLK	SEDA	4	97	1	4	1	2	11	780	850	60	50	000	+05	2000	8.3	2	77	70	29.60
0181	5122	100176	70	AMC	JAVE	6	232	1	3	I	2	19	900	600	22	32	+04	+03	3000	10.3	2	73	61	29.59
0182	5226	111076	70	BUIC	LESA	8	455	4	1	GM402	1	25	425	600	27	30	+06	+06	4500	14.0	1	76	67	29.94
0183	5465	030477	70	CHEV	NOVA	6	250	1	1	GM102	2	18	700	600	33	33	+03	+04	3000	10.3	2	72	71	29.10
0184	5102	092876	70	CHEV	CHEL	8	307	2	1	GM103	1	20	410	600	27	30	+16	+08	3500	11.2	2	73	64	29.38
0185	5321	121676	70	CHEV	CHEL	8	350	2	1	GM104	1	20	600	600	29	30	+04	+04	3500	11.2	2	74	66	29.29
0186	5229	111176	70	CHEV	IMPA	8	350	2	1	GM104	1	25	520	600	30	30	000	+04	4000	13.2	1	76	68	29.62
0187	5089	092376	70	CHEV	IMPA	8	350	2	1	GM104	1	20	620	600	23	30	+08	+04	4000	13.2	1	73	65	29.60
0188	5783	060977	70	DODG	CORO	6	225	1	1	RG	1	19	620	650	99	99	000	000	3500	11.2	2	79	67	29.53

APPENDIX A

LISTING OF VEHICLE AND TEST PARAMETERS

ST. LOUIS

VEH	RUN	DATE	YR	MAKE	MODL	C	CID	V	T	FAM	A	FT	IRPM	IRPMS	DW	DWS	IGN	IGNS	INRT	RLHP	L	DB	WB	BAROM
0189	5233	111576	70	FORD	MUST	8	302	2	1	302	2	22	585	575	30	27	+06	+06	3000	10.3	2	75	68	29.60
0190	5074	091676	70	FORD	STAW	8	302	2	1	302	1	20	475	600	31	27	+03	+06	4000	13.2	1	74	63	29.35
0191	5173	101976	70	FORD	LTD	8	351	2	1	351W	1	25	550	600	29	27	+10	+10	4000	12.0	2	75	65	30.00
0192	5329	123076	70	FORD	LTD	8	351	2	1	351W	1	25	450	600	38	27	+09	+08	4000	13.2	1	77	68	29.28
0193	5695	051377	70	MERC	MARQ	8	390	2	1		1	25	580	590	36	27	+04	+04	4500	14.0	1	71	67	29.54
0194	5377	011477	70	OLDS	STAW	8	350	4	1	GM301	1	23	450	575	36	30	+08	+10	4000	13.2	1	76	62	29.77
0195	5357	010777	70	PLYM	STAW	8	383	2	1	LA	1	23	670	650	99	30	+04	+03	4500	14.0	1	77	72	29.95
0196	5333	122076	70	PLYM	DUST	8	318	2	1	LA	1	18	920	700	30	32	+19	000	3000	10.3	2	78	71	29.53
0197	5375	011477	70	PONT	LEMA	8	350	2	1	GM201	1	20	520	650	31	30	+09	+09	4000	13.2	1	77	63	29.64
0198	5297	112376	70	DATS	510	4	97	2	4	L16	2	12	1010	700	47	99	+14	+10	2250	8.8	2	74	67	29.44
0200	5314	121076	70	VOLK	SEDA	4	97	1	4	1	2	10	1325	850	59	50	+15	000	2000	8.3	2	74	67	29.73
0423	5034	090376	70	BUIC	SKYL	8	350	2	1	GM401	1	20	600	600	28	30	+08	+06	3500	12.3	1	75	62	29.56
0424	5281	120876	70	BUIC	SKYL	8	350	2	1	GM401	1	25	420	600	29	30	+06	+06	3500	12.3	1	76	69	29.74
0425	5806	061577	70	CADI	DEVI	8	472	4	1	GM501	1	26	440	600	32	30	+07	+08	5000	14.7	1	76	69	29.54
0426	5513	032377	70	CHEV	CAMA	8	307	2	1	GM103	1	19	600	600	28	30	+14	+08	3500	11.2	2	74	69	29.63
0427	5319	122076	70	CHEV	STAW	8	350	2	1	GM104	1	18	510	600	30	30	+09	+04	4500	14.0	1	76	69	28.92
0428	5090	092476	70	CHEV	IMPA	8	400	2	1	GM104	1	25	675	600	25	30	+10	+08	4000	13.2	1	77	68	29.54
0429	5091	092376	70	CHRY	STAW	8	383	2	1	LA	1	23	625	650	27	30	+04	+03	5000	14.7	1	78	67	29.51
0430	5222	110976	70	DODG	CHAR	8	318	2	1	LA	1	19	1475	700	31	32	+21	000	3500	12.3	1	76	67	29.72
0431	5305	121476	70	FORD	MAVE	6	200	1	1	170-200	2	16	600	550	45	38	+01	+06	2750	9.9	2	75	68	29.47
0432	5526	032577	70	FORD	GALA	8	351	2	1	351-C	1	25	510	600	43	29	+12	+06	4000	13.2	1	75	70	29.19
0433	5086	092576	70	FORD	LTD	8	390	2	1	360-390	1	25	625	600	30	31	-04	+06	4000	13.2	1	76	67	29.46
0434	5045	091076	70	OLDS	DELT	8	350	2	1	GM301	1	25	560	675	28	30	+35	+08	4500	12.7	2	77	67	29.62
0435	5133	100776	70	PLYM	SATE	8	318	2	1	LA	1	19	720	700	29	32	000	000	3500	11.2	2	73	62	29.48
0436	5099	092776	70	PONT	GRNP	8	400	4	1	GM202	1	24	550	650	32	30	+08	+09	4000	12.0	2	77	67	29.40
0437	5241	111676	70	VOLK	SEDA	4	97	1	4	1	2	10	950	850	55	50	000	000	2000	8.3	2	76	69	29.32
9438	5654	050277	69	AMC	RAMB	6	199	1	3		2	16	800	600	33	33	+03	000	3000	11.3	1	76	69	29.49
9439	5255	112376	69	BUIC	WILD	8	430	4	1		1	25	600	600	29	30	-01	000	4500	14.0	1	76	68	29.77
9440	5131	100776	69	BUIC	SPEC	8	350	2	1	GM301	1	20	420	600	28	30	+05	+05	3500	12.3	1	72	61	29.53
9441	5242	111776	69	CADI	DEVI	8	472	4	1	GM501	1	26	525	550	28	30	+08	+05	5000	14.7	1	75	68	29.29
9442	5215	110976	69	CHEV	NOVA	8	307	2	1	GM103	1	18	560	600	30	30	+11	+02	3500	11.2	2	73	65	29.41
9443	5245	111876	69	CHEV	IMPA	8	350	2	1	GM104	1	24	490	600	25	30	+05	+04	4000	12.0	2	74	67	29.44
9444	5236	111576	69	CHEV	CAMA	8	307	2	3	GM103	2	18	840	700	27	30	+09	+02	3500	11.2	2	77	70	29.43
9445	5041	082876	69	CHEV	IMPA	8	327	2	1		1	24	600	600	29	30	+02	+02	4000	12.0	2	77	65	29.62
9446	5249	112276	69	CHEV	ELCA	8	350	2	1	GM104	1	20	525	600	28	30	+18	000	3500	11.2	2	76	69	29.63
9447	5288	121076	69	CHEV	NOVA	6	250	1	3		1	18	840	700	35	32	+05	000	3000	10.3	2	75	69	29.82
9448	5307	121676	69	CHEV	BELA	8	350	4	1		2	24	640	600	34	30	+04	+04	4000	13.2	1	76	69	29.51
9449	5216	110876	69	CHRY	NEWP	8	383	2	1		1	24	525	600	32	33	+02	+08	4000	13.2	1	74	65	29.53
9450	5334	277676	69	DODG	POLA	8	318	2	1		1	19	620	650	23	33	000	+03	4000	12.0	2	74	68	29.52
9451	5568	040877	69	FORD	LTD	8	390	2	1		1	25	520	550	32	29	+04	+06	4000	12.0	2	74	65	29.71
9452	5101	092976	69	FORD	FALC	8	302	2	1	302	1	16	550	550	23	29	-03	+06	3000	10.3	2	74	63	29.38
9453	5210	110576	69	FORD	GALA	8	351	2	1	351	1	24	500	550	30	29	-03	+06	4000	12.0	2	77	66	29.50
9454	5147	101276	69	FORD	LTD	8	390	2	1	390	1	25	635	550	30	29	+05	+06	4000	13.2	1	79	67	29.28
9455	5120	100576	69	FORD	FAIR	8	302	2	1	302	1	20	650	550	29	27	+05	+06	3500	11.2	2	77	64	29.54
9456	5105	093076	69	FORD	THUN	8	429	4	1	429-460	1	25	625	550	29	29	+08	+06	4500	14.0	1	74	65	29.36
9457	5693	051277	69	MERC	MONG	8	351	2	1	351	1	20	550	550	29	28	+06	+06	3500	12.3	1	78	69	29.56
9458	5425	021677	69	OLDS	98	8	455	4	1	GM302	1	25	600	575	30	30	+08	+10	4500	14.0	1	75	62	29.03
9459	5295	121376	69	OLDS	CUTL	8	350	4	1		1	20	760	575	26	30	+16	+06	3500	12.3	1	75	67	29.50
9460	5799	061377	69	PLYM	SATE	8	318	2	1		1	19	550	650	35	35	000	000	3500	12.3	1	72	65	29.66
9461	5185	101976	69	PLYM	VALI	6	225	1	1		1	18	1075	650	44	44	+16	000	3000	10.3	2	76	66	29.69

APPENDIX A

LISTING OF VEHICLE AND TEST PARAMETERS

ST. LOUIS

VEH	RUN	DATE	YR	MAKE	MODL	C	CID	V	T	FAM	A	FT	IRPM	IRPMS	DW	DWS	IGN	IGNS	INRT	RLHP	L	DB	WB	BAROM
9462	5362	011077	69	PONT	LEMA	8	350	2	1	GM201	1	22	640	650	34	30	+11	+09	3500	11.2	2	77	71	30.00
9463	5390	012577	69	PONT	CATA	8	400	2	1	GM201	1	22	650	650	29	30	+12	+12	4500	14.0	1	72	62	29.23
9464	5700	051077	69	PONT	STAW	8	400	2	1		1	22	530	650	32	30	+04	+09	5000	13.4	2	72	67	29.54
9465	5347	122876	69	TOYO	CORO	4	116	2	4	3K-C	1	10	740	650	51	52	000	+05	2500	9.4	2	74	69	29.62
9466	5287	120976	69	VOLK	SEDA	4	91	1	4		2	11	1010	550	45	50	+03	+08	2000	8.3	2	77	71	29.86
9467	5237	111676	69	VOLK	SEDA	4	91	1	4		2	11	1250	850	50	50	-02	000	2000	8.3	2	76	69	29.40
8468	5079	092276	66	AMC	STAW	6	199	1	1		2	16	575	550	57	33	+02	000	3000	10.3	2	76	64	29.64
8469	5331	122876	68	AMC	RAMB	6	232	1	1		2	16	600	525	30	33	+01	000	3000	10.3	2	75	67	29.50
8470	5159	101476	67	AMC	REBE	8	290	2	1		2	22	600	550	30	30	000	000	3500	12.3	1	77	67	29.78
8471	6559	050377	68	BUIC	WILD	8	430	4	1		1	25	550	550	41	30	+02	000	4500	12.7	2	78	71	29.31
8472	5473	031077	68	BUIC	ELEC	8	430	4	1		1	25	620	550	34	30	+06	000	4500	14.0	1	75	67	29.30
8473	5096	092776	68	BUIC	LESA	8	350	4	1		1	25	570	550	28	30	000	000	4000	13.2	1	77	68	29.43
8474	5080	092476	66	CADI	DEVI	8	429	4	1		1	26	575	500	23	28	+09	+05	5000	14.7	1	72	66	29.51
8475	5092	092476	68	CHEV	CHEL	6	230	1	1		2	20	630	500	24	32	+15	+04	3500	11.2	2	73	65	29.49
8476	5202	110476	67	CHEV	CHEL	8	283	2	1		1	20	545	500	21	30	+12	+04	3500	11.2	2	75	65	29.65
8477	5071	091676	67	CHEV	IMPA	8	283	2	1		1	24	600	500	29	30	+05	+04	4000	12.0	2	74	62	29.34
8478	5186	102676	68	CHEV	IMPA	8	327	4	1		1	24	525	600	28	30	+11	+04	4000	12.0	2	75	65	29.68
8479	5572	041277	66	CHEV	IMPA	8	327	4	1		1	21	900	500	30	30	+04	+08	4000	13.2	1	79	67	29.68
8480	5038	090476	68	CHEV	IMPA	8	396	4	1		1	24	695	600	31	30	+04	+04	4000	13.2	1	77	62	29.49
8481	5230	111576	66	CHEV	CHEL	8	283	2	1		1	20	525	500	23	30	+09	+04	3500	11.2	2	75	67	29.62
8482	5262	112476	67	CHEV	CAMA	6	250	1	1		2	18	500	500	40	33	000	+04	3000	10.3	2	76	69	29.56
8483	5136	101176	68	CHEV	CHEL	8	307	2	1	GM103	1	20	550	600	18	30	+17	+02	3500	11.2	2	74	64	29.50
8484	5218	111076	68	CHEV	CHEL	8	318	2	1		2	20	500	600	27	31	+04	+02	3500	12.3	1	75	67	29.58
8485	5111	093076	68	CHEV	IMPA	8	327	4	1	GM327	1	24	600	600	30	30	+08	+04	4000	12.0	2	70	67	29.33
8486	5265	120176	68	CHEV	IMPA	8	302	2	1		1	24	400	600	34	31	+04	+02	4000	13.2	1	77	70	29.68
8487	5189	102176	68	CHRY	NEWP	8	383	2	1		1	24	875	600	32	31	+04	+07	4000	13.2	1	75	66	29.61
8488	5046	090776	67	DODG	DART	6	225	1	1		1	18	575	550	44	43	+02	+05	3000	10.3	2	78	67	29.58
8489	5350	010577	68	DODG	CORO	8	318	2	1		1	19	520	600	28	30	-05	-03	3500	11.2	2	75	69	29.34
8490	5267	120376	68	DODG	MONA	8	383	2	1		1	24	700	650	28	31	000	+05	4000	13.2	1	75	68	29.84
8491	5221	111076	67	FORD	MUST	8	289	2	1		1	16	475	500	27	29	+05	+06	3500	11.2	2	77	67	29.72
8492	5133	100876	67	FORD	FAIR	8	289	2	1		1	20	625	500	29	29	-02	+06	3500	11.2	2	73	63	29.49
8493	5258	112276	66	FORD	FAIR	8	289	2	1		2	16	700	500	28	28	+04	+06	3500	11.2	2	77	69	29.67
8494	5322	122276	68	FORD	GALA	8	302	2	1		2	25	560	550	27	27	000	+06	4000	13.2	1	75	67	29.25
8495	5268	120376	68	FORD	TORI	8	302	2	1		1	20	750	550	28	29	+08	+06	3500	11.2	2	76	69	29.83
8496	5167	101976	68	FORD	GALA	8	390	2	1		1	25	570	550	32	28	+06	+06	4000	13.2	1	75	65	29.71
8497	5172	101276	67	FORD	MUST	6	200	1	1		2	16	675	500	43	39	+10	+12	3000	10.3	2	75	65	30.01
8498	5051	091476	67	FORD	GALA	8	289	2	1		1	25	690	550	32	27	000	+06	4000	12.0	2	71	63	29.66
8499	5191	110276	67	FORD	MUST	8	289	2	1		1	16	645	500	29	25	+07	+06	3500	11.2	2	74	65	29.69
8500	5114	100476	66	FORD	GALA	8	390	4	1	390	1	25	585	550	30	27	+23	+06	4000	13.2	1	71	67	29.35
8501	5104	092876	68	FORD	STAW	8	390	2	1		1	20	550	550	30	27	+08	+06	4500	14.0	1	74	65	29.38
8502	5330	122876	67	LINC	CONT	8	462	4	1		1	25	460	475	32	29	+04	+10	5500	15.3	1	77	69	29.42
8503	5196	110376	67	MERC	COUG	8	289	2	1		2	17	550	500	27	29	+06	+06	3500	11.2	2	75	65	29.65
8504	5309	121776	67	OLDS	CUTL	8	330	2	1		2	20	480	575	24	30	+10	+08	3500	11.2	2	78	69	29.64
8505	5286	120976	67	OLDS	98	8	425	2	1		1	25	480	500	30	30	+20	+08	4500	14.0	1	78	71	29.88
8506	5044	090876	68	OLDS	CUTL	8	350	2	1		1	20	575	575	23	30	+07	+07	3500	12.3	1	74	65	29.70
8507	5300	121576	68	PLYM	FRY3	8	318	2	1		1	24	700	600	29	31	000	-03	4000	12.0	2	75	67	29.44
8508	5140	101276	68	PLYM	FRY3	8	318	2	1	LA	1	24	600	600	27	30	-01	-03	4000	12.0	2	73	64	29.48
8509	5246	111776	68	PLYM	SATE	8	383	2	1		1	19	800	650	29	30	+10	+13	3500	12.3	1	76	69	29.43
8510	5340	010477	66	PLYM	FRY3	8	383	2	1		1	25	740	600	31	31	000	+08	4000	13.2	1	74	69	29.35
8511	5055	091476	68	PONT	BONN	8	400	4	1		1	27	675	650	29	30	+25	+09	4500	12.7	2	70	62	29.60

APPENDIX A

LISTING OF VEHICLE AND TEST PARAMETERS

ST. LOUIS

VEH	RUN	DATE	YR	MAKE	MODL	C	CID	V	T	FAM	A	FT	IRPM	IRPMS	DW	DWS	IGN	IGNS	INRT	RLHP	L	DB	WB	BAROM
8512	5208	110576	66	PONT	CATA	8	389	2	1		1	27	575	575	28	30	+04	+06	4000	13.2	1	77	67	29.63
8513	5198	110276	68	PONT	TEMP	8	350	2	1		2	22	575	600	24	30	+12	+09	4000	12.0	2	75	65	29.69
8514	5157	101476	67	PONT	STAW	8	400	2	1		1	27	600	600	27	30	+06	+06	4500	14.0	1	75	65	29.70
8515	5378	011777	68	PONT	STAW	8	389	4	1		1	27	760	650	21	30	+07	+09	5000	14.7	1	77	66	29.80
8516	5251	111976	67	VOLK	SEDA	4	91	1	4		2	10	1080	850	53	50	+15	000	2000	8.3	2	75	69	29.48
8517	5338	010377	66	VOLK	SEDA	4	97	1	4		2	11	940	750	50	50	+03	+08	2250	8.8	2	76	70	29.40

APPENDIX A

LISTING OF VEHICLE AND TEST PARAMETERS

WASHINGTON D.C.

VEH	RUN	DATE	YR	MAKE	MODL	C	CID	V	T	FAM	A	FT	IRPM	IRPMS	DW	DWS	IGN	IGNS	INRT	RLHP	L	DB	WB	BAROM
7001	6176	061576	76	CHEV	G10	8	350	4	1	GM12J4B	2	21	625	600	99	99	+08	+08	4000	12.0	2	81	67	29.98
7002	6164	060876	76	CHEV	G10	8	350	4	1	GM12J4B	1	21	590	600	99	99	+08	+08	4000	13.2	1	80	64	29.89
7003	6140	052476	76	CHEV	G10	8	350	4	1	GM12J4B	2	21	650	600	99	99	+09	+08	4000	12.0	2	72	61	29.81
7004	6131	051976	76	CHEV	G10	8	350	4	1	GM12J4B	2	21	550	600	99	99	+09	+08	4000	13.2	1	74	60	29.80
7005	6175	061576	76	DODG	B100	8	318	2	1	TD31825S	2	23	650	750	99	99	+02	+02	3500	11.2	2	79	65	30.06
7006	6177	061676	76	DODG	B100	6	225	1	1	TD22515S	2	23	575	750	99	99	+03	+02	3500	12.3	1	78	64	29.98
7007	6066	050476	76	FORD	E100	6	300	1	1	3001CMF	2	18	975	550	99	99	+14	+12	4000	12.0	2	74	62	30.20
7008	6142	052576	76	FORD	E100	8	351	2	1	351W	2	18	525	650	99	99	+08	+08	4000	12.0	2	74	63	29.88
7009	6167	060976	76	FORD	F100	8	360	2	1	360/390	1	22	625	650	99	99	+05	+06	4000	13.2	1	81	66	30.00
7010	6094	051276	76	DATS	620	4	119	2	4	N-101	2	12	750	750	99	99	+12	+12	2500	9.4	2	72	61	29.96
7011	6160	060776	75	CHEV	C10	8	350	4	3	GM12J43A	2	20	700	800	99	99	+09	+06	4000	12.0	2	77	62	30.07
7012	6025	042776	75	CHEV	C10	8	350	2	1	GM12J23	2	17	0650	600	99	99	+07	+06	4000	12.0	2	73	57	30.06
7013	6061	050476	75	CHEV	G10V	8	350	4	1	GM12J43A	2	21	770	600	99	99	+07	+06	4000	13.2	1	77	61	30.24
7014	6042	043076	75	DODG	B100	8	318	2	1	T-LA2S-C	2	36	825	750	99	99	+12	+02	3500	11.2	2	77	59	30.07
7015	6095	051276	75	FORD	F100	8	302	2	3	302D	2	19	500	550	99	99	+05	+06	4000	12.0	2	74	61	30.00
7016	6181	061776	75	FORD	F100	6	300	1	3	300	2	19	700	700	99	99	+16	+12	4000	12.0	2	79	65	30.07
7017	6132	051976	75	FORD	F100	8	360	2	1	360/390E	1	19	525	650	99	99	+10	+06	4000	13.2	1	76	61	29.83
6018	6136	052076	76	AMC	PACE	6	258	1	1	I-2	1	22	625	550	99	99	+08	+08	3500	11.2	2	75	62	29.95
6019	6116	051776	76	BUIC	REGA	8	350	4	1	GM40J4	1	22	580	600	99	99	+12	+12	4000	13.2	1	72	67	29.87
6020	6111	051576	76	BUIC	ELEC	8	455	4	1	GM40S4	1	26	625	600	99	99	+10	+12	5000	14.7	1	75	68	30.09
6021	6162	060776	76	CADI	DEVI	8	500	4	1	GM60V4	1	28	570	600	99	99	+05	+06	5500	15.3	1	80	64	29.98
6022	6090	051176	76	CHEV	MONT	8	350	2	1	GM10J2	1	22	625	600	99	99	+06	+06	4000	13.2	1	73	65	29.97
6023	6032	042876	76	CHEV	MALI	8	305	2	1	GM10G2	1	22	490	600	99	99	+09	+08	4000	13.2	1	74	59	30.10
6024	6084	050876	76	CHEV	MONZ	4	140	2	4	GM10C2	1	19	790	700	99	99	+08	+10	3000	11.3	1	75	62	30.25
6025	6137	052076	76	CHEV	MALI	8	305	2	1	GM10G2	1	22	650	600	99	99	+06	+08	4000	13.2	1	79	63	29.84
6026	6091	051176	76	CHEV	MONT	8	350	2	1	GM10J2	1	22	525	600	99	99	+05	+06	4000	13.2	1	75	67	29.88
6027	6109	051476	76	CHEV	CAMA	6	250	1	3	GM10F1	1	21	610	850	99	99	+05	+06	3500	11.2	2	80	70	30.04
6028	6071	050576	76	CHEV	CHET	4	85	1	1	GM10W1	1	13	875	800	99	99	+10	+10	2250	8.8	2	79	63	30.09
6029	6141	052476	76	DODG	ASPE	8	318	2	1	FD31825S	1	18	550	750	99	99	+02	+02	3500	12.3	1	76	63	29.75
6030	6078	050676	76	DODG	ASPE	6	225	1	1	FD22515S	1	18	550	750	99	99	+03	+03	4000	12.0	2	76	66	30.03
6031	6102	051376	76	FORD	PINT	4	140	2	4	2.3	2	13	770	850	99	99	-03	+06	2750	9.9	2	74	62	30.23
6032	6182	061876	76	FORD	LTD	8	400	2	1	351M/400	1	21	625	650	99	99	+09	+08	5000	14.7	1	77	64	30.14
6033	6170	060976	76	FORD	TORI	8	351	2	1	351M/400	1	21	460	650	99	99	+02	+12	4500	14.0	1	81	65	29.94
6034	6083	050776	76	FORD	GRAN	6	250	1	1	250	1	19	700	600	99	99	+14	+12	3500	12.3	1	78	70	29.87
6035	6092	051176	76	FORD	GRAN	8	302	2	1	302A	1	19	625	600	99	99	+06	+06	3500	12.3	1	74	67	29.80
6036	6178	061676	76	FORD	GRAN	8	302	2	1	302A	1	19	710	650	99	99	+06	+06	3500	12.3	1	80	65	29.91
6037	6143	052576	76	MERC	MARQ	8	400	2	1	351M/400	1	21	625	650	99	99	+09	+08	5000	14.7	1	74	62	29.93
6038	6180	061776	76	MERC	COME	6	250	1	1	250	1	19	670	600	99	99	+12	+12	3000	11.3	1	78	65	30.10
6039	6043	043076	76	OLDS	CUTL	8	260	2	1	GM30H2J	1	22	525	650	99	99	+18	+18	4000	13.2	1	77	61	30.03
6040	6088	051076	76	OLDS	CUTL	8	350	4	1	GM30J4	1	22	500	550	99	99	+19	+20	4000	13.2	1	77	64	30.10
6041	6138	052176	76	OLDS	DELT	8	455	4	1	GM30S4	1	26	450	550	99	99	+18	+16	4500	14.0	1	75	65	29.85
6042	6157	060376	76	PLYM	VOLA	6	225	1	1	FD22515S	1	18	575	750	99	99	+03	+02	3500	11.2	2	75	61	30.19
6043	6126	051876	76	PLYM	FURY	8	318	2	1	FD31825S	1	21	650	750	99	99	+03	+02	4000	13.2	1	73	64	29.65
6044	6161	060776	76	PONT	GRNP	8	350	2	1	GM20K2	1	25	700	650	99	99	+16	+16	4500	14.0	1	79	62	30.07
6045	6125	051876	76	PONT	CATA	8	400	2	1	GM20K2	1	26	540	650	99	99	+16	+16	4500	14.0	1	74	66	29.62
6046	6101	051376	76	DATS	B210	4	85	2	4	N-081	2	12	825	700	99	99	+10	+10	2250	8.8	2	75	62	30.22
6047	6115	051576	76	DATS	710	4	119	2	4	N-091	1	13	1400	750	99	99	+13	+12	2750	10.9	1	79	69	30.07
6048	6106	051476	76	TOYO	CORO	4	97	2	5	2T-C	1	12	900	850	99	99	+08	+10	2500	9.4	2	76	69	30.14
6049	6153	060376	76	TOYO	CORO	4	133	2	5	20R	1	15	985	850	99	99	+06	+08	3000	11.3	1	76	64	30.18
6050	6144	052576	76	VOLK	RABB	4	97	2	4	32F	2	11	1150	950	47	47	-02	-03	2000	8.3	2	76	62	29.95

APPENDIX A

LISTING OF VEHICLE AND TEST PARAMETERS

WASHINGTON D.C.

VEH	RUN	DATE	YR	MAKE	MODL	C	CID	V	T	FAM	A	FT	IRPM	IRPMS	Dw	DWS	IGN	IGNS	INRT	RLHP	L	DB	WB	BAROM
6051	6155	060376	76	VOLK	RABB	4	97	2	4	32F	2	11	1400	950	99	99	-03	-03	2000	8.3	2	79	65	30.17
5052	6040	042976	75	AMC	PACE	6	258	1	1	I	1	22	725	550	99	99	+05	+03	3500	11.2	2	75	59	30.10
5053	6117	051776	75	BUIC	LESA	8	350	4	1	GM40J43	1	26	615	600	99	99	+16	+12	4500	14.0	1	77	70	29.83
5054	6114	051576	75	BUIC	ELEC	8	455	4	1	GM40S43	1	26	575	600	99	99	+17	+12	5000	14.7	1	77	69	30.10
5055	6124	051876	75	CADI	DEVI	8	500	4	1	GM60V43	1	28	485	600	99	99	+06	+06	5500	15.3	1	74	66	29.63
5056	6055	050376	75	CHEV	VEGA	4	140	2	1	GM10C21	2	16	820	750	99	99	+14	+12	2750	9.9	2	75	61	29.92
5057	6026	042876	75	CHEV	MONT	8	350	2	1	GM10J23	1	22	600	600	99	99	+07	+06	4000	13.2	1	73	57	30.18
5058	6038	042976	75	CHEV	IMPA	8	350	2	1	GM10J23	1	26	650	600	99	99	+06	+06	4500	14.0	1	74	59	30.14
5059	6010	042176	75	CHEV	CAPR	8	400	4	1	GM10K43A	1	22	625	600	99	99	+07	+08	5500	15.3	1	78	71	29.92
5060	6048	050176	75	CHEV	CAMA	6	250	1	1	GM10F13	2	21	1000	550	99	99	+10	+10	3500	11.2	2	73	66	29.71
5061	6003	041676	75	CHRY	NEWY	8	440	4	1	XRB	1	27	650	750	99	99	+08	+08	5000	14.7	1	76	63	30.18
5062	6009	042076	75	DODG	DART	6	225	1	1	RG	2	16	720	750	99	99	000	000	3500	11.2	2	82	72	29.93
5063	6035	042976	75	FORD	MUST	4	140	2	4	2.3A	2	13	735	750	99	99	+08	+06	3000	10.3	2	75	60	30.17
5064	6072	050576	75	FORD	LTD	8	351	2	1	351M/400	1	24	500	650	99	99	+08	+08	4500	14.0	1	76	63	30.09
5065	6149	052776	75	FORD	TORI	8	400	2	1	351M/400	1	27	425	700	99	99	+05	+06	4500	14.0	1	76	63	30.22
5066	6183	062276	75	FORD	MAVE	6	250	1	1	250	1	19	490	500	99	99	+04	+06	3000	10.3	2	79	71	30.15
5067	6089	051176	75	FORD	GRAN	8	302	2	1	302	1	19	500	650	99	99	+09	+08	3500	11.2	2	73	65	29.99
5068	6017	042376	75	MERC	MARQ	8	460	4	1	460	1	24	650	650	99	99	+13	+14	5000	14.7	1	76	63	29.97
5069	6018	042676	75	OLDS	DELT	8	350	4	1	GM30J43	1	26	500	650	99	99	+18	+20	4500	14.0	1	71	59	29.63
5070	6159	060476	75	OLDS	CUST	8	455	4	1	GM30S43	1	22	575	650	99	99	+16	+16	5500	15.3	1	78	64	30.34
5071	6021	042776	75	PLYM	FURY	6	225	1	1	RG	1	26	670	750	99	99	+08	000	4000	12.0	2	73	57	30.13
5072	6096	051276	75	PLYM	FURY	8	318	2	1	LA2	1	26	620	750	99	99	+03	+02	4000	13.2	1	74	61	30.00
5073	6155	060376	75	PONT	CATA	8	400	2	1	GM20K23	1	26	470	650	99	99	+15	+16	4500	14.0	1	77	63	30.17
5074	6169	060976	75	PONT	FIRE	8	350	2	1	GM20K23	1	20	510	600	99	99	+13	+16	4000	13.2	1	81	64	29.94
5075	6004	041676	75	DATS	B210	4	85	2	4	N-081	1	11	775	700	51	51	+10	+10	2250	8.8	2	80	65	30.16
5076	6028	042876	75	TOYO	CORO	4	133	2	4	20R	2	15	780	850	99	99	+08	+08	2750	10.9	1	73	58	30.17
5077	6067	050576	75	TOYO	CORO	4	97	2	4	2T-C	2	11	850	850	99	99	+11	+12	2500	9.4	2	74	62	30.24
5078	6085	051076	75	VOLK	RABB	4	90	2	1	32	2	11	875	950	48	47	+02	-03	2000	8.3	2	75	65	30.17
5079	6019	042676	75	VOLK	RABB	4	90	2	4	32	2	12	1250	950	48	50	-03	-03	2000	9.1	1	72	60	29.69
4080	6013	042276	74	AMC	MATA	8	304	2	1	II	1	20	675	700	30	30	+05	+05	4000	13.2	1	77	67	29.89
4081	6008	042076	74	BUIC	REGA	8	350	2	1	GM401-2	1	22	790	650	22	30	+10	+04	4000	12.0	2	80	71	29.94
4082	6054	050376	74	CADI	DEVI	8	472	4	1	GM501	1	28	670	600	99	99	+10	+10	5500	15.3	1	74	60	29.92
4083	6073	050576	74	CHEV	VEGA	4	140	1	1	GM101-1	2	11	525	750	31	32	+18	+12	2750	9.9	2	76	64	30.10
4084	6006	041676	74	CHEV	MALI	8	350	2	1	GM104-2	1	22	650	600	38	30	+06	+08	4000	13.2	1	80	66	30.14
4085	6012	042176	74	CHEV	NOVA	6	250	1	1	GM102	2	21	550	600	31	33	+07	+06	3500	11.2	2	82	72	29.91
4086	6051	050376	74	CHEV	CAMA	8	350	2	1	GM104-2	1	18	580	600	19	30	+13	+08	4000	12.0	2	71	60	29.84
4087	6128	051876	74	CHEV	NOVA	8	350	2	3	GM104-2	1	21	630	600	29	30	000	000	3500	12.3	1	71	60	29.75
4088	6130	051976	74	CHEV	MALI	8	400	2	1	GM104-2	1	22	625	600	24	30	+10	+08	4500	14.0	1	69	58	29.80
4089	6104	051376	74	CHRY	NEWP	8	400	2	1	B-2V	1	23	660	750	99	99	+08	+08	4500	14.0	1	75	62	30.16
4090	6005	041676	74	DODG	DART	6	225	1	1	RH	1	16	725	750	99	99	000	000	3500	11.2	2	83	67	30.17
4091	6047	050176	74	FORD	PINT	4	122	2	4	2.0	2	11	660	750	45	41	+06	+06	2750	9.9	2	73	66	29.78
4092	6011	042176	74	FORD	TORI	8	302	2	1	302	1	23	530	650	99	99	+03	+10	4000	13.2	1	80	71	29.93
4093	6079	050776	74	FORD	MAVE	6	250	1	1	250	1	15	700	600	35	35	+02	+06	3000	10.3	2	73	68	29.95
4094	6147	052776	74	FORD	STAW	8	400	2	1	400	1	22	500	650	99	99	+18	+12	5000	14.7	1	72	61	30.24
4095	6029	042876	74	FORD	TORI	8	351	2	1	351C	1	21	560	650	24	24	+14	+14	4500	14.0	1	73	58	30.14
4096	6014	042276	74	MERC	COUG	8	351	2	1	351C	1	20	740	650	23	27	+17	+14	4500	14.0	1	78	67	29.88
4097	6046	050176	74	OLDS	CUTL	8	350	4	1	GM301-4	1	22	700	650	29	30	+11	+12	4000	13.2	1	72	66	29.86
4098	6174	061576	74	OLDS	CUST	8	455	4	1	GM302-4	1	22	475	550	28	30	+06	+08	5500	15.3	1	78	65	30.08
4099	6074	050676	74	PLYM	VALI	8	318	2	1	LA2	1	16	680	750	99	99	+05	000	3500	12.3	1	76	66	30.14
4100	6063	050476	74	PLYM	VALI	6	225	1	1	RG	1	16	625	750	99	99	000	000	3500	11.2	2	73	58	30.19

APPENDIX A

LISTING OF VEHICLE AND TEST PARAMETERS

WASHINGTON D.C.

VEH	RUN	DATE	YR	MAKE	MODL	C	CID	V	T	FAM	A	FT	IRPM	IRPMS	DW	DWS	IGN	IGNS	INRT	RLHP	L	DB	WB	BAROM
4101	6037	042976	74	PONT	VENT	8	350	2	1	GM201	1	20	650	650	29	30	+13	+12	3500	12.3	1	75	60	30.18
4102	6015	042376	74	DATS	710	4	108	2	4	4	1	13	800	800	50	50	+10	+12	2500	9.4	2	76	62	29.99
4103	6121	051776	74	TOYO	CORO	4	97	2	4	2T-C	1	11	810	750	60	54	+06	+05	2250	8.8	2	79	70	29.72
4104	6122	051776	74	TOYO	CELI	4	120	2	1	18R-C	1	13	665	800	54	54	+14	+07	2750	10.9	1	77	71	29.71
4105	6022	042776	74	VOLK	SEDA	4	97	1	4	AH-A	2	11	875	850	61	50	+07	+08	2250	9.7	1	73	57	30.10
4106	6069	050576	74	VOLK	SEDA	4	97	1	4	1	2	11	975	850	55	50	+08	+08	2250	8.8	2	75	62	30.21
3107	6057	050376	73	AMC	HORN	6	232	1	1	I	2	16	600	600	32	32	-02	+05	3000	9.9	2	75	61	30.05
3108	6127	051876	73	BUIC	CNTR	8	455	4	1	GM402	1	26	575	650	36	30	+05	+04	4500	14.0	1	72	61	29.77
3109	6020	042776	73	BUIC	LESA	8	350	4	1	GM401	1	26	625	600	30	30	+03	+04	4500	14.0	1	71	55	30.10
3110	6065	050476	73	CADI	DEVI	8	472	4	1	GM501	1	28	450	600	28	30	+06	+08	5500	15.3	1	73	61	30.19
3111	608[illegible]	051076	73	CHEV	VEGA	4	140	2	1	GM101	1	11	875	750	31	31	+08	+12	2500	9.4	2	74	64	30.17
3112	6103	051376	73	CHEV	MONT	8	350	2	1	GM104	1	22	600	600	31	30	+08	+08	4000	13.2	1	74	62	30.16
3113	6173	061476	73	CHEV	CAMA	8	350	2	3	GM104	1	18	850	600	28	30	+08	+08	3500	11.2	2	79	67	30.17
3114	6031	042876	73	CHEV	BELA	8	350	2	1	GM104	1	22	590	600	31	30	+06	+08	5000	14.7	1	75	58	30.11
3115	6118	051776	73	CHEV	NOVA	8	350	2	1	GM104	1	21	560	600	31	30	+09	+08	3500	12.3	1	78	70	29.78
3116	6087	051076	73	DODG	DART	6	225	1	1	RG	2	16	540	750	99	99	000	000	3000	11.3	1	77	63	30.14
3117	6053	050376	73	FORD	PINT	4	122	2	4	2.0	2	11	850	650	53	41	+09	+09	2750	9.9	2	74	61	29.90
3118	6076	050676	73	FORD	TORI	8	351	2	1	351-C	1	23	675	650	25	25	+02	+06	4000	13.2	1	75	66	30.14
3119	6110	051476	73	FORD	MAVE	8	302	2	1	302	1	15	420	650	32	30	000	+06	3000	10.3	2	78	71	30.05
3120	6134	051976	73	FORD	TORI	8	351	2	1	351-C	1	21	525	700	25	25	+06	+06	4500	14.0	1	73	60	29.85
3121	6052	050376	73	FORD	LTD	8	400	2	1	400	1	22	660	650	28	28	+11	+12	4500	14.0	1	75	62	29.88
3122	6129	051976	73	MERC	MONG	8	400	2	1	400	1	23	660	650	30	30	+11	+12	4000	13.2	1	69	58	29.80
3123	6045	050176	73	OLDS	98	8	455	4	1	GM302	1	26	500	650	34	30	+03	+08	5000	14.7	1	73	66	29.91
3124	6064	050476	73	OLDS	CUTL	8	350	4	1	GM301	1	22	610	650	28	30	+14	+12	4000	13.2	1	71	58	30.18
3125	6148	052776	73	PLYM	SATE	8	318	2	1	LA	1	21	625	700	99	99	+03	000	4000	13.2	1	74	62	30.25
3126	6033	042976	73	PLYM	VALI	6	225	1	1	RG	2	16	600	750	99	99	+02	000	3000	10.3	2	71	58	30.16
3127	6049	050176	73	PONT	GRNV	8	455	4	1	GM202	1	26	675	650	30	30	+16	+12	4500	14.0	1	74	67	29.67
3128	6172	061476	73	PONT	LEMA	8	350	2	1	GM201	1	22	500	650	38	30	+02	+12	4000	13.2	1	76	64	30.22
3129	6154	060376	73	DATS	610	4	108	2	4	4	2	15	1600	800	61	55	+08	+05	2500	9.4	2	78	64	30.18
3130	6133	051976	73	OPEL	1900	4	116	2	4	GM601	2	12	620	850	55	50	+01	000	2250	8.8	2	74	60	29.83
3131	6068	050576	73	TOYO	CORO	4	120	2	4	18R-C	2	15	770	650	99	99	+03	+07	2750	9.9	2	76	62	30.24
3132	6041	043076	73	VOLK	TRAN	4	103	2	4	2	2	16	550	900	53	50	-13	-05	3000	10.3	2	76	58	30.12
3133	6075	050676	73	VOLK	SEDA	4	97	1	4	1	1	11	850	850	65	50	-07	+08	2000	8.3	2	74	65	30.14

Appendix B

LISTING OF TEST VEHICLE USE DATA

CALIFORNIA, ST. LOUIS, AND WASHINGTON, D.C.
(Test Location)

COLUMN HEADING	DESCRIPTION	NUMBER OF DIGITS
VEH:	Vehicle Number	4
YR:	Model Year	2
MAKE:	Vehicle Make	4
MODL:	Vehicle Model	4
ODOM:	Odometer Reading	6
N:	New or Used (1 = new, 2 = used)	1
PUR:	Purchase Date (1 = 0-3 mos, 2 = 3-12 mos. 3 = 1-2 yrs., 3 = 1-2 yrs., 4 = over 2 yrs.)	1
YMT:	Yearly Miles Traveled (1 = 0-5, 2 = 5-10, 3 = 10-15, 4 = 15-20, 5 = 20-30, 6 = over 30)	1
F:	City Expressways (1 = Almost All, 2 = Most, 3 = Some, 4 = Little or None)	1
C:	Major City Streets (1 = Almost All, 2 = Most, 3 = Some, 4 = Little or None)	1
O:	Other City Streets (1 = Almost All, 2 = Most, 3 = Some, 4 = Little or None)	1
I:	Rural Expressways (1 = Almost All, 2 = Most, 3 = Some, 4 = Little or None)	1
R:	Other Rural Roads (1 = Almost All, 2 = Most, 3 = Some, 4 = Little or None)	1
W:	To and From Work (1 = Almost All, 2 = Most, 3 = Some, 4 = Little or None)	1
S:	Shopping and Errands (1 = Almost All, 2 = Most, 3 = Some, 4 = Little or None)	1
B:	Business (Not To and From Work) (1 = Almost All, 2 = Most, 3 = Some, 4 = Little or None)	1
V:	Other (Social, Vocations, etc.) (1 = Almost All, 2 = Most, 3 = Some, 4 = Little or None)	1
L:	Trip to the Lab (1 = City Street only, 2 = Some Expressways, 3 = Primarily Expressways)	1

MI:	Approximate Miles	
VEHUSE:	Vehicle Use (1 = Almost All, 2 = Most, 3 = Some, 4 = Little or None) a) Driver only (1, 2, 3, or 4) b) Driver and 1 Passenger (1, 2, 3, or 4) c) Driver and 2 or More Passengers (1, 2, 3, or 4) d) Driver only with Heavy Cargo (1, 2, 3, or 4) e) Driver, Passenger and Cargo (1, 2, 3, or 4) f) Towing a Trailer (1, 2, 3, or 4)	
TR:	Number of Trips made on a Typical Day	1
F:	How Often is Full Throttle Acceleration Used (weekly) (1 = Seldom, 2 = Once or Twice, 3 = 3-6 times, 4 = Every Day)	1
OA:	Fuel Economy Overall	2
HD:	Highway Fuel Economy	2
CD:	City Driving Fuel	2
H:	Hydrogen Sulfide Odor in Exhaust (1 = Never, 2 = Seldom, 3 = Occasionally, 4 = Frequently, 5 = Don't Know)	1
U:	Vehicle Operated Regularly on Unpaved Roads (1 = Yes, 2 = No, 3 = Don't Know)	1
DAMAGE:	Major Damage (1 = Yes, 2 = No) a) Engine (1 or 2) b) Cooling System (1 or 2) c) Fuel System (1 or 2) d) Exhaust System (1 or 2) e) No Damage (1 or 2) f) Don't Know (1 or 2)	6

APPENDIX B

LISTING OF TEST VEHICLE USE DATA

CALIFORNIA

VEH	YR	MAKE	MODL	ODOM	N	PUR	YMT	F	C	O	I	R	W	S	B	V	L	MI	VEHUSE	TR	F	OA	HD	CD	H	U	DAMAGE
7001	76	CHEV	G10V	8772	1	2	3	2	3	4	4	4	2	4	3	4	2	25	234444	02	1			16	1	2	222212
7002	76	CHEV	C10	17415	1	2	5	2	3	4	4	4	2	4	3	4	2	10	234444	15	1	15	17	13	4	2	222212
7003	76	CHEV	C10	7188	1	2	3	2	3	4	4	4	2	4	4	3	1	02	234444	02	1	16	23	12	1	2	222212
7004	76	CHEV	SCOT	4329	1	1	3	2	3	4	4	4	4	2	4	3	3	30	324444	04	1	21	26	17	2	2	222212
7005	76	DODG	B100	7875	1	2	3	2	3	4	4	4	2	4	3	4	3	15	234444	02	1			14	4	2	222212
7006	76	DODG	CUST	6848	1	2	3	2	3	4	4	4	2	3	4	4	3	08	234444	02	3			13	2	2	222212
7007	76	FORD	E100	6611	1	2	3	3	2	4	4	4	2	4	4	4	1	06	234444	05	1				1	2	222212
7008	76	FORD	F100	11792	1	1	5	4	2	3	4	4	2	4	4	3	2	15	234444	02	1			11	1	2	222212
7009	76	FORD	E100	14467	1	2	3	2	3	4	4	4	2	4	3	4	1	03	234444	01	1	10			1	2	222212
7010	76	TOYO	SR5	13373	1	2	4	2	3	4	4	4	2	3	4	4	2	10	234444	02	4	19	20	18	3	2	222212
7011	75	CHEV	G10V	8138	1	3	2	3	2	4	4	4	4	2	4	3	2	07	324444	02	1	12	14	10	1	2	222212
7012	75	CHEV	C10	28698	1	3	4	4	2	3	4	4	3	3	2	4	3	12	244344	10	2	10	12	08	1	2	222212
7013	75	CHEV	G10V	22274	1	3	3	3	3	4	4	4	2	3	4	4	1	02	324444	04	2	12	14	10	1	2	222212
7014	75	DODG	TRAD	27249	1	3	5	3	3	3	4	4	4	4	2	3	1	05	314444	04	1	18	20	18	3	2	222212
7015	75	FORD	F100	9257	1	3	2	2	3	4	4	4	2	3	4	4	3	10	234444	04	1	09	14	11	1	2	222212
7016	75	FORD	F100	25634	1	3	3	2	3	4	4	4	2	4	3	4	3	17	324444	02	1	12	13	10	1	2	222212
7017	75	FORD	E100	19288	1	3	4	4	2	3	4	4	2	3	4	4	1	07	234444	05	1			12	1	2	222212
6018	76	AMC	PACE	22508	1	2	5	2	3	4	4	4	2	4	3	4	2	06	234444	05	1		15		1	2	222212
6019	76	BUIC	REGA	3783	1	2	2	4	2	3	4	4	2	3	4	4	1	20	234444	02	1				1	2	222212
6020	76	BUIC	REGA	25525	1	3	4	2	3	4	4	4	2	3	4	4	3	15	234444	04	1	14	12	10	1	2	222212
6021	76	CADI	COUP	9389	1	2	3	2	3	4	4	4	2	4	4	4	1	02	234444	02	1	12	14	10	1	2	222212
6022	76	CHEV	MONT	5127	1	2	3	2	3	4	4	4	3	3	4	4	2	06	234444	04	1	10	12	08	1	2	222212
6023	76	CHEV	MONT	2054	1	2	3	3	3	3	3	4	3	3	3	3	1	05	333334	02	2				1	2	222212
6024	76	CHEV	VEGA	5090	1	1	3	2	3	4	4	4	2	3	4	4	1	03	234444	04	1				1	2	222212
6025	76	CHEV	CAPR	15516	1	2	3	3	2	4	4	4	2	3	4	4	1	10	243444	02	1	15	18	12	1	2	222212
6026	76	CHEV	CAMA	7660	1	2	3	2	3	4	4	4	2	4	4	3	3	25	234444	02	1		20		1	2	222212
6027	76	CHEV	NOVA	2862	1	2	2	2	3	4	4	4	4	2	4	3	3	05	234444	02	1	17	18	16	2	2	222212
6028	76	CHEV	CHEV	4101	1	2	2	4	2	4	4	4	2	3	4	4	1	08	234444	02	1			22	1	2	222212
6029	76	DODG	ASPE	4023	1	2	2	1	4	4	4	4	4	1	4	4	3	16	414444	02	2	12	13	11	1	2	222212
6030	76	DODG	ASPE	4565	1	2	3	2	3	4	4	4	4	2	4	3	1	06	324444	02	1	20	22	18	1	2	222212
6031	76	FORD	PINT	13506	1	2	2	2	3	4	4	4	3	2	4	4	3	30	234444	04	1				1	2	222212
6032	76	FORD	LTD	1582	1	1	2	4	2	3	4	4	4	2	4	3	1	02	432444	02	2	14	16	12	1	2	222212
6033	76	FORD	GRAN	4793	1	2	3	2	3	4	4	4	2	4	3	4	1	10	234444	05	1	12	14	10	1	2	222212
6034	76	FORD	GRAN	13278	2	1	3	3	2	4	4	4	2	4	3	4	1	15	134444	10	1	15			1	2	222212
6035	76	FORD	GRAN	763	1	1	3	3	3	3	3	4	2	3	4	3	1	02	144444	04	3				1	2	222212
6036	76	FORD	ELIT	10120	1	2	3	1	4	4	4	4	4	3	2	4	3	25	441444	03	1	13			1	2	222212
6037	76	MERC	MONG	5256	1	2	3	3	2	4	4	4	2	3	4	4	1	08	324444	02	1			11	1	2	222212
6038	76	MERC	BOBC	25044	1	3	4	2	3	4	4	4	3	2	4	4	3	25	342444	04	1	30	32	28	2	2	222212
6039	76	OLDS	OMEG	14263	1	2	5	2	3	4	4	4	2	4	3	4	2	25	234444	03	1				1	2	222212
6040	76	OLDS	CUTL	10870	1	2	3	2	3	4	4	4	2	4	3	4	3	14	234444	03	4	16	17	14	4	2	222212
6041	76	OLDS	VIST	17083	1	3	4	2	3	4	4	4	4	2	4	3	2	12	234444	08	1	10	12	09	1	2	222212
6042	76	PLYM	VOLA	2436	1	1	3	2	3	4	4	4	2	3	4	4	1	05	234444	03	2	17	20	15	1	2	222212
6043	76	PLYM	VOLA	9688	1	2	3	3	2	4	4	4	2	3	4	4	3	15	234444	04	2	12	15	10	1	2	222212
6044	76	PONT	FIRE	5892	1	2	4	3	2	4	4	4	2	4	3	4	1	04	234444	25	1				1	2	222212
6045	76	PONT	GRNP	18392	1	3	3	2	3	4	4	4	2	3	4	4	2	12	234444	04	2	12	15	10	1	2	222212
6046	76	DATS	B210	3033	1	1	3	1	3	4	4	4	2	4	4	3	3	18	234444	04	1	27			1	2	222212
6047	76	DATS	610	6638	1	2	4	2	3	4	4	4	2	4	3	4	2	20	234444	08	3	20	22	18	1	2	222212
6048	76	TOYO	CORR	1033	1	1	3	2	3	3	4	4	4	2	4	3	2	06	234444	06	1	24	26	22	1	2	222212
6049	76	TOYO	CORO	12135	1	2	5	2	3	4	4	4	3	3	3	4	2	08	323444	02	1	22			1	2	222212
6050	76	VOLK	SEDA	2193	1	2	1	4	2	3	4	4	4	2	4	3	1	02	324444	02	2			25	1	2	222212

APPENDIX B

LISTING OF TEST VEHICLE USE DATA

CALIFORNIA

VEH	YR	MAKE	MODL	ODOM	N	PUR	YMT	F	C	O	I	R	W	S	B	V	L	MI	VEHUSE	TR	F	OA	HD	CD	H	U	DAMAGE
6051	76	VOLK	SCIR	4570	1	2	1	1	4	4	4	4	1	4	4	4	1	03	233444	05	2	25	35	25	1	2	222212
5052	75	AMC	PACE	15859	1	3	3	3	2	4	4	4	2	3	4	4	2	07	234444	02	2	16	19	15	1	2	222212
5053	75	BUIC	REGA	20125	1	3	3	3	3	2	4	4	3	3	2	4	2	12	134444	02	2	13			1	2	222212
5054	75	BUIC	REGA	28266	1	3	3	1	3	4	4	4	1	4	3	4	2	32	144444	02	1	10	12	08	1	2	222212
5055	75	CADI	DEVI	41780	1	3	4	3	1	4	4	4	3	3	2	4	3	15	134444	30	1	13	16	12	1	2	222212
5056	75	CHEV	MONZ	18750	1	3	4	2	3	4	4	4	2	3	4	4	1	10	234444	06	1	19	20	18	2	2	222212
5057	75	CHEV	MALI	8810	1	3	2	1	3	4	4	4	2	3	4	3	1	12	314444	02	1	16			1	2	222212
5058	75	CHEV	IMPA	16086	2	2	3	3	3	4	4	4	2	3	4	4	3	13	234444	04	1			12	1	2	222212
5059	75	CHEV	IMPA	4872	1	2	3	3	1	4	4	4	1	4	3	4	2	15	314444	08	1				1	2	222212
5060	75	CHEV	NOVA	7781	1	3	2	3	2	4	4	4	2	3	4	4	3	15	432444	03	2				1	2	222212
5061	75	CHRY	CORD	16657	1	3	4	2	3	4	4	4	2	3	4	4	3	15	324444	10	4		17		2	2	222212
5062	75	DODG	DART	17275	1	3	2	3	3	4	4	4	3	3	4	4	2	10	234444	06	1	19	20	18	1	2	222212
5063	75	FORD	PINT	9688	2	1	2	2	3	3	4	4	1	4	4	3	1	05	134444	06	2	18			1	2	222212
5064	75	FORD	LTD	3905	1	2	1	4	2	3	4	4	4	2	4	3	2	10	234444	02	1	10	12	09	1	2	222212
5065	75	FORD	LTD	16173	1	3	3	2	3	3	4	4	2	4	4	3	1	02	243443	04	3	09	12	08	2	2	222212
5066	75	FORD	GRAN	24112	2	2	3	3	2	3	4	4	3	3	3	3	2	07	143444	04	1	14	15	13	1	2	222212
5067	75	FORD	GRAN	24207	1	3	4	2	3	4	4	4	2	3	4	4	2	10	234444	02	1	14	18	11	1	2	222212
5068	75	MERC	MONT	11362	1	3	3	3	3	4	4	4	2	3	4	4	1	05	234444	03	1	12	13	11	1	2	222212
5069	75	OLDS	CUTL	18298	1	3	3	2	3	4	4	4	2	3	4	4	3	06	234444	06	1	11	13	10	1	2	222212
5070	75	OLDS	DELT	12765	1	3	3	3	3	2	4	4	2	3	4	4	1	04	243444	04	3				2	2	222212
5071	75	PLYM	DUST	6957	1	2	2	4	2	3	4	4	2	4	3	4	2	04	234444	04	1	14	16	12	1	2	222212
5072	75	PLYM	STAW	13507	1	3	2	2	3	4	4	4	3	4	2	4	1	05	234444	02	1	12	14	10	1	2	222212
5073	75	PONT	CATA	9635	1	3	2	4	2	3	4	4	4	3	4	2	1	02	234444	02	1				1	2	222212
5074	75	PONT	LEMA	22514	1	3	4	2	3	4	4	4	2	3	4	4	1	02	234444	06	2	14	16	12	1	2	222212
5075	75	DATS	B210	30479	1	2	5	1	4	4	4	4	2	3	4	3	1	05	134444	02	4	28			1	2	222212
5076	75	TOYO	CORO	18381	1	2	4	2	3	3	4	4	4	2	4	3	2	15	332444	08	1	18	24	16	2	2	222212
5077	75	TOYO	CORO	10048	2	2	3	4	2	3	4	4	2	3	4	4	2	05	234444	04	1	20	22	18	1	2	222212
5078	75	VOLK	SEDA	11258	1	2	3	2	3	3	4	4	2	3	4	3	3	13	233444	06	4	25			1	2	222212
5079	75	VOLK	RABB	14026	1	3	3	3	3	4	4	4	2	3	4	4	2	06	234444	04	1	26	27	25	1	2	222212
4080	74	AMC	MATA	54252	1	3	5	3	2	4	4	4	2	3	4	4	1	10	324444	02	4	10			1	2	222212
4081	74	BUIC	LESA	29429	1	4	3	2	3	4	4	4	3	2	4	3	3	12	414444	08	1	12	14	10	1	2	222212
4082	74	CADI	COUP	36948	2	4	2	3	4	4	4	2	3	4	4	3	1	03	334444	04	1	14	12	10	1	2	222212
4083	74	CHEV	VEGA	16616	1	4	2	4	1	4	4	4	2	3	4	4	3	15	144444	04	1				1	2	222212
4084	74	CHEV	MONT	50199	2	3	4	2	3	4	4	4	2	4	3	4	2	52	234444	02	1		13		1	2	222212
4085	74	CHEV	MONT	28761	1	4	2	4	2	3	4	4	2	4	4	3	2	12	234444	02	1	16	18	14	1	2	222212
4086	74	CHEV	CAPR	50491	1	4	5	2	3	4	4	4	2	4	3	4	3	05	234444	06	2				1	2	222212
4087	74	CHEV	IMPA	45186	2	3	5	2	3	4	4	4	2	4	3	4	2	21	234444	04	1	13	14	12	1	2	222212
4088	74	CHEV	CAPR	38378	1	4	3	3	2	3	4	4	4	1	4	3	2	05	134444	04	1				1	2	222212
4089	74	CHRY	NEWP	44213	1	4	4	2	3	4	4	4	2	4	3	4	1	05	234444	10	1				1	2	222212
4090	74	DODG	DART	22419	1	4	3	4	2	3	4	4	2	3	4	4	1	04	234444	02	1	20	17	15	1	2	222212
4091	74	FORD	PINT	22692	1	3	3	2	3	4	4	4	2	3	4	4	2	05	234444	04	1				1	2	222212
4092	74	FORD	MAVE	19324	1	4	2	3	1	4	4	4	3	4	1	4	3	30	134444	20	2	14	16	13	1	2	222212
4093	74	FORD	MUST	23312	1	3	3	4	1	4	4	4	1	4	4	4	1	05	144444	02	1				1	2	222212
4094	74	FORD	LTD	28369	2	2	3	2	3	3	4	4	4	2	3	3	1	13	431444	03	1	09			1	2	222212
4095	74	FORD	LTD	41612	1	4	3	2	3	4	4	4	2	3	4	4	3	10	234444	02	2	13	14	12	1	2	222212
4096	74	MERC	MONT	23247	2	3	3	2	3	4	4	4	3	3	4	4	3	10	234444	06	1	17	10	08	1	2	222212
4097	74	OLDS	CUTL	16540	1	4	3	2	3	4	4	4	3	3	4	4	3	08	334444	04	1				1	2	222212
4098	74	OLDS	CUTL	35069	1	4	3	4	2	3	4	4	2	3	4	4	1	08	234444	02	2	14	16	12	1	2	222212
4099	74	PLYM	SATE	9807	1	3	2	3	2	4	4	4	2	3	4	4	1	05	424444	05	2	16	17	15	1	2	222212
4100	74	PLYM	DUST	39759	1	4	4	2	3	4	4	4	2	3	4	3	3	10	234444	03	1		22	17	1	2	222212

APPENDIX B

LISTING OF TEST VEHICLE USE DATA

CALIFORNIA

VEH	YR	MAKE	MODL	ODOM	N	PUR	YMT	F	C	O	I	R	W	S	B	V	L	MI	VEHUSE	TR	F	OA	HD	CD	H	U	DAMAGE
4101	74	PONT	VENT	20466	2	2	2	2	3	4	4	4	2	3	4	4	1	02	234444	03	1	17	16	14	1	2	222212
4102	74	DATS	710	38582	2	3	4	2	3	4	4	4	2	3	4	4	1	02	234444	02	1				1	2	222212
4103	74	TOYO	CORO	18011	1	4	2	3	2	4	4	4	2	3	4	4	1	06	234444	02	1	23	25	19	1	2	222212
4104	74	TOYO	CELI	30124	1	4	3	2	3	4	4	4	2	3	4	4	1	07	234444	10	1	17	19	15	1	2	222212
4105	74	VOLK	SEDA	51990	1	4	4	1	3	4	4	4	1	4	4	4	1	10	144444	02	4	27	30	26	1	2	222212
4106	74	VOLK	SEDA	28698	1	4	3	2	3	4	4	4	3	2	4	4	3	02	333444	02	4				1	2	222212
3107	73	AMC	HORN	38919	1	4	3	4	2	3	4	4	2	3	4	4	1	10	234444	02	1	18	20	16	1	2	222212
3108	73	BUIC	REGA	31376	2	4	3	3	3	4	3	4	2	3	3	3	1	01	134444	03	1	12	14	10	1	2	222212
3109	73	BUIC	REGA	42235	1	4	3	3	3	4	4	4	2	3	4	4	3	05	424444	04	1	13	15	12	1	2	222212
3110	73	CADI	COUP	63119	2	4	5	2	3	4	4	4	2	4	3	4	3	25	234444	05	1				1	2	222212
3111	73	CHEV	VEGA	19632	1	4	2	2	3	4	4	4	2	3	4	4	3	20	234444	06	1				1	2	222212
3112	73	CHEV	MONT	46758	1	4	3	3	3	4	4	4	2	3	4	4	2	12	234444	02	1			12	1	2	222212
3113	73	CHEV	NOVA	65125	2	4	3	2	3	4	4	4	2	3	4	4	2	05	334444	02	1	14	16	12	1	2	222212
3114	73	CHEV	IMPA	56813	2	3	4	4	2	3	4	4	2	3	4	4	1	06	234444	03	1	14	15	13	1	2	222212
3115	73	CHEV	CAPR	31355	1	4	2	3	3	4	4	4	3	2	4	4	1	20	324444	06	1	11	13	09	1	2	222212
3116	73	DODG	DART	52061	1	4	3	2	3	4	4	4	4	3	4	2	1	04	234444	02	1				1	2	222212
3117	73	FORD	PINT	38924	1	4	2	3	2	4	4	4	4	1	4	4	1	05	332444	02	1		26		1	2	222212
3118	73	FORD	TORI	61985	1	4	3	2	3	4	4	4	2	3	4	4	1	07	324444	03	1	13	14	12	1	2	222212
3119	73	FORD	MAVE	28125	1	4	2	2	3	3	4	4	1	3	3	3	3	15	134444	04	1	13	15	11	1	2	222212
3120	73	FORD	STAW	51215	1	4	3	2	3	4	4	4	2	3	4	4	3	10	334444	02	1	12	14	09	1	2	222212
3121	73	FORD	TORI	40298	2	4	3	2	3	4	4	4	4	1	4	3	3	22	441444	03	1	13	15	11	1	2	222212
3122	73	MERC	MONT	63651	2	2	3	3	2	4	4	4	2	3	4	4	1	15	234444	06	1	16	17	15	1	2	222212
3123	73	OLDS	STAW	24128	1	4	3	4	2	3	4	4	4	2	4	3	2	10	234444	02	1	09	10	08	1	2	222212
3124	73	OLDS	CUTL	63798	2	4	4	2	3	4	4	4	2	4	4	3	1	10	234444	02	1	12	15	12	1	2	222212
3125	73	PLYM	VALI	68853	1	4	3	4	2	3	4	4	2	3	4	4	1	03	234444	04	2	17	19	14	1	2	222212
3126	73	PLYM	DUST	45290	2	3	4	2	3	4	4	4	1	4	3	4	3	40	314444	02	4	18			1	2	222212
3127	73	PONT	LEMA	48665	1	4	4	2	3	4	4	4	4	2	4	3	3	15	234444	06	1				1	2	222212
3128	73	PONT	LEMA	69513	2	2	4	3	2	3	4	4	3	2	4	3	1	07	432444	06	1			12	1	2	222212
3129	73	DATS	1600	50710	1	4	4	2	3	4	4	4	2	4	4	4	1	05	234444	02	4	21	26	19	1	2	222212
3130	73	OPEL	MANT	33970	1	4	3	2	3	4	4	4	2	4	4	3	3	30	234444	02	1		26		1	2	222212
3131	73	TOYO	CORO	55996	1	4	4	3	2	3	4	4	4	2	4	3	2	15	314444	10	1	24	27	19	1	2	222212
3132	73	VOLK	SEDA	59367	1	4	4	1	3	4	4	4	1	3	4	4	1	15	134444	02	1	30			1	2	222212
3133	73	VOLK	SEDA	31181	1	4	3	3	1	4	4	4	1	3	4	4	1	07	134444	10	1	25	25	25	1	2	222212
2134	72	AMC	GREM	63318	2	4	5	2	3	3	4	4	1	3	3	3	1	05	133444	10	3	19	21	19	1	2	222212
2135	72	BUIC	SKYL	38869	2	4	1	3	3	3	3	4	4	1	4	4	2	40	134444	02	2	12	13	11	1	2	222212
2136	72	CADI	FLEE	49186	2	4	1	4	2	3	4	4	4	2	4	3	2	06	234444	02	1			09	1	2	222212
2137	72	CHEV	VEGA	33152	1	4	2	3	2	3	4	4	1	3	4	4	1	12	134444	02	1	14		14	1	2	222212
2138	72	CHEV	MALI	81789	1	4	4	2	3	4	4	4	2	3	4	4	1	11	234444	03	1	12	14	10	1	2	222212
2139	72	CHEV	MONT	57690	1	4	3	3	2	2	4	4	1	3	4	4	2	05	234444	04	1	18	20	15	5	2	222212
2140	72	CHEV	NOVA	53318	2	2	3	2	3	4	4	4	2	3	4	4	1	02	324444	04	1	17	19	15	1	2	222212
2141	72	CHEV	IMPA	50270	1	4	3	3	2	4	4	4	2	3	4	4	1	12	234444	05	2				1	2	222212
2142	72	CHEV	STAW	76936	2	4	4	2	3	4	4	4	2	3	4	4	2	05	234444	02	1	11	12	09	1	2	222212
2143	72	DODG	CORO	74760	1	4	4	2	3	4	4	4	1	4	4	3	2	10	314444	04	1	15			1	2	222212
2144	72	FORD	PINT	46531	2	4	3	2	3	4	4	4	2	3	4	4	3	10	234444	03	1		22		1	2	222212
2145	72	FORD	TORI	41949	2	4	2	3	3	2	4	4	3	2	4	3	1	07	134444	02	2				5	2	222212
2146	72	FORD	MUST	72323	1	4	4	2	3	4	4	4	2	3	4	4	3	15	234444	04	4	18	18		1	2	222212
2147	72	FORD	STAW	68312	2	4	4	2	3	4	4	4	4	2	4	3	3	15	423444	04	1		17	13	1	2	222221
2148	72	FORD	STAW	70324	2	3	4	2	3	4	4	4	2	4	4	3	2	09	234444	04	1	10	11	09	1	2	222212
2149	72	MERC	MONG	46949	1	4	3	4	2	3	4	4	2	3	4	4	2	05	234444	04	1		16		1	2	222212
2150	72	OLDS	DELT	70046	1	4	4	2	3	3	4	4	2	3	4	3	1	07	234444	06	1	15	18	13	1	2	222212

APPENDIX B

LISTING OF TEST VEHICLE USE DATA

CALIFORNIA

VEH	YR	MAKE	MODL	ODOM	N	PUR	YMT	F	C	O	I	R	W	S	B	V	L	MI	VEHUSE	TR	F	OA	HD	CD	H	U	DAMAGE
2151	72	PLYM	DUST	47123	1	4	3	2	3	3	4	4	2	3	4	4	3	20	432444	04	1	20	17	15	1	2	222212
2152	72	PLYM	SATE	39390	2	4	2	3	3	4	4	4	2	3	4	4	1	05	234444	04	1	15	17	13	1	2	222212
2153	72	PONT	CATA	60491	1	4	4	3	1	4	4	4	4	1	4	4	1	10	342444	03	3				1	2	222212
2154	72	PONT	BONN	83103	1	4	3	2	3	4	4	4	2	3	4	4	3	28	234444	03	1	13	14	11	1	2	222212
2155	72	DATS	510	27122	1	4	2	3	2	3	4	4	2	3	4	3	1	06	134444	04	1	18	22	18	1	2	222212
2156	72	TOYO	CORO	58321	2	2	3	2	3	4	4	4	2	3	4	4	1	05	234444	02	2	20	29	19	1	2	222122
2157	72	VOLK	SEDA	105715	2	3	2	2	3	4	4	4	2	3	4	4	3	15	234444	05	1				1	2	222221
2158	72	VOLK	SEDA	51181	2	3	3	4	2	3	4	4	2	3	4	4	1	10	234444	04	1			24	1	2	222212
1159	71	BUIC	LESA	44068	1	4	2	4	2	3	4	4	4	2	4	3	1	05	324444	02	1	14	17	12	1	2	222212
1160	71	BUIC	SKYL	38892	2	4	3	4	2	3	4	4	4	2	4	4	1	10	442444	02	1	15	17	13	1	2	222212
1161	71	CHEV	VEGA	70953	1	4	3	2	3	4	4	4	2	3	4	4	2	04	234444	02	1	24	26	22	1	2	222212
1162	71	CHEV	MONT	114555	2	4	5	2	3	4	4	4	2	4	3	4	3	09	324444	07	1	15	16	14	1	2	222212
1163	71	CHEV	CAMA	37353	2	2	3	3	1	4	4	4	3	2	4	4	2	10	234444	06	4	17	18	16	1	2	222212
1164	71	CHEV	KING	53705	2	3	3	2	3	4	4	4	2	3	4	4	2	05	234444	04	1			12	1	2	122222
1165	71	CHEV	MALI	67091	2	3	2	2	3	4	4	4	2	3	4	4	1	02	234444	03	1				1	2	222212
1166	71	CHRY	STAW	100470	2	1	3	4	2	3	4	4	4	2	4	3	1	02	144444	02	1	14	12	10	1	2	222212
1167	71	DODG	CHAR	45456	1	4	2	2	3	4	4	4	2	4	4	4	1	04	234444	02	1			08	1	2	222212
1168	71	FORD	PINT	112208	2	3	5	4	3	4	2	4	2	4	4	3	3	30	134444	02	2	20			1	2	222212
1169	71	FORD	TORI	58816	1	4	3	2	3	4	4	4	2	3	4	4	3	10	234444	06	1	14	13	15	1	2	222212
1170	71	FORD	MAVE	76420	2	4	3	2	3	4	4	4	4	2	4	3	1	23	234444	04	1			14	1	2	222212
1171	71	FORD	CUST	88404	2	4	3	3	2	3	4	4	1	4	3	4	2	10	134444	04	2	15	17	12	1	2	222212
1172	71	FORD	RANC	85883	2	2	3	2	3	4	4	4	2	3	4	4	1	12	334444	02	1	12	14	10	1	2	222212
1173	71	MERC	COUG	69598	2	2	3	3	2	3	4	4	3	2	4	3	3	17	413444	06	1	13			1	2	222221
1174	71	OLDS	CUTL	45946	2	4	2	4	2	3	4	4	4	2	4	3	1	07	234444	02	1	22	24	18	1	2	222212
1175	71	PLYM	DUST	40508	2	3	4	1	3	4	4	4	4	4	4	1	3	20	234444	10	2	17	18	15	1	2	222212
1176	71	PONT	LEMA	83749	2	4	4	4	2	3	4	4	4	2	4	3	3	16	324444	04	1	14	16	11	1	2	222212
1177	71	PONT	GRNP	45180	1	4	2	3	2	4	4	4	2	3	4	3	2	10	442444	02	3	10	10	10	1	2	122222
1178	71	DATS	510	79084	1	4	3	4	2	4	3	4	2	3	4	3	2	10	234444	04	3	26	28	24	1	2	222212
1179	71	TOYO	CORO	86770	1	4	4	2	3	4	4	4	2	3	4	4	3	10	234444	04	1		24		1	2	222212
1180	71	VOLK	SQUA	70487	2	4	3	3	2	3	4	4	2	3	4	4	2	15	234444	03	4				1	2	222221
0181	70	AMC	GREM	51052	2	2	2	2	3	4	4	4	2	4	4	4	3	10	234444	02	1	16	18	14	1	2	222212
0182	70	BUIC	ELEC	71778	1	4	3	2	3	4	4	4	4	2	4	3	3	10	342444	02	2	14	16	12	1	2	222212
0183	70	CHEV	NOVA	85324	2	4	2	3	2	3	4	4	4	1	4	3	1	12	134444	02	1	13			1	2	222212
0184	70	CHEV	CAME	90107	1	4	5	2	3	4	4	4	2	3	4	4	2	37	234444	05	1	19	20	18	1	2	222212
0185	70	CHEV	IMPA	43998	1	4	2	4	2	3	4	4	4	2	4	3	2	15	234444	04	1				1	2	222212
0186	70	CHEV	IMPA	92710	2	4	4	2	3	4	4	4	2	3	4	4	1	12	234444	02	1	16			1	2	222212
0187	70	CHEV	NOVA	69928	1	4	3	4	2	3	4	4	2	3	4	4	1	06	324444	04	1			16	1	2	222212
0188	70	DODG	DART	54045	1	4	2	4	2	3	4	4	2	4	4	3	2	11	234444	02	1	18	22	15	1	2	222212
0189	70	FORD	MAVE	55014	2	3	2	2	3	4	4	4	2	3	4	4	1	05	234444	04	1				1	2	222212
0190	70	FORD	GALA	40116	1	4	2	4	2	3	4	4	4	2	4	3	2	10	324444	02	1	17	20	15	1	2	222212
0191	70	FORD	LTD	84518	1	4	3	4	2	3	4	4	2	3	4	4	2	10	234444	04	1			11	1	2	222212
0192	70	FORD	GALA	122856	1	4	5	2	3	4	4	4	2	3	4	4	2	35	234444	02	2				1	2	222212
0193	70	MERC	MARQ	87094	1	4	3	3	2	4	4	4	2	3	4	4	2	14	234444	04	1	13	14	11	1	2	222212
0194	70	OLDS	98	60260	2	2	2	2	4	3	4	4	2	4	4	3	1	03	323444	02	3	12	13	11	1	2	222212
0195	70	PLYM	DUST	60733	1	4	3	2	3	4	4	4	3	4	2	4	3	15	234444	06	2	14	16	12	1	2	222212
0196	70	PLYM	VALI	107088	2	1	3	4	2	3	4	4	2	3	4	4	3	10	234444	03	1				1	2	222122
0197	70	PONT	TEMP	51467	1	4	2	4	2	3	4	4	2	3	4	4	1	05	324444	02	1				1	2	222212
0198	70	DATS	510	99356	1	4	4	3	1	4	4	4	2	3	4	3	2	12	243444	14	4	25	30	22	1	2	222122
0199	70	TOYO	CORO	63027	2	4	3	2	4	4	4	4	2	4	3	4	3	07	244444	05	1		22		1	2	222212
0200	70	VOLK	VAN	126996	2	4	5	2	3	4	4	4	2	4	4	3	2	04	243444	04	1	23	25	20	1	2	122222

APPENDIX B

LISTING OF TEST VEHICLE USE DATA

ST. LOUIS

VEH	YR	MAKE	MODL	ODOM	N	PUR	YMT	F	C	O	I	R	W	S	H	V	L	MI	VEHUSE	TR	F	OA	HD	CD	H	U	DAMAGE
7002	76	CHEV	C10	6519	1	2	2	1	4	4	4	4	1	4	4	4	3	15	414444	03	1	11			3	2	222212
7003	76	CHEV	C10	20517	1	3	3	2	3	4	4	4	4	2	4	3	1	10	414444	06	1	10			3	2	222212
7005	76	DODG	B100	5655	1	2	2	4	2	3	3	4	4	2	3	4	3	17	234444	01	1	15	17	13	1	2	222212
7007	76	FORD	CLUB	7722	1	3	2	2	3	4	4	4	4	2	4	3	2	04	441444	02	1		17	13	1	3	223444
7008	76	FORD	F150	5090	1	2	2	4	2	4	4	4	4	4	1	4	1	02	144444	04	1				1	2	222212
7010	76	TOYO	TRUC	5804	1	2	2	4	1	4	4	4	2	3	4	4	3	20	144444	04	1	25			1	2	222212
7011	75	CHEV	C10	27407	1	4	3	3	2	4	4	4	2	3	4	3	1	04	144444	04	1	12			1	2	222212
7012	75	CHEV	TRUC	14716	1	3	3	2	3	4	4	4	4	4	1	4	3	15	144444	01	1	10			4	2	222212
7013	75	CHEV	G10V	28705	1	3	3	2	3	4	4	4	2	3	4	4	1	10	243444	04	1	12			1	2	222212
7014	75	DODG	C100	26222	1	3	3	1	4	4	4	4	1	4	4	4	3	25	144444	05	4	12			4	2	222212
7015	75	FORD	F100	14513	1	4	2	2	3	4	4	4	2	3	4	4	1	05	342444	02	1	10			4	2	222212
7016	75	FORD	F100	25400	2	3	2	2	3	4	4	4	2	3	4	4	3	30	144444	03	1	13	14	11	1	2	222212
7017	75	FORD	F100	7319	2	1	2	2	3	4	4	4	4	2	4	3	3	15	243444	02	1	10			1	2	222212
6018	76	AMC	HORN	9629	1	2	3	1	4	4	4	4	2	3	4	4	3	12	144444	04	1	15			1	2	222212
6019	76	BUIC	STAW	19271	1	2	4	4	1	4	4	4	1	4	4	4	2	30	441444	03	1	11			1	2	222212
6020	76	BUIC	SKYL	19618	1	2	5	2	3	4	4	4	4	4	2	4	3	05	144444	10	1	20			1	2	222212
6021	76	CADI	ELDO	13315	1	3	3	2	3	4	4	4	1	4	4	4	3	10	144444	02	1				1	2	222212
6022	76	CHEV	IMPA	11125	1	2	3	2	3	4	4	4	1	4	4	4	3	06	441444	12	1	14			3	2	222212
6023	76	CHEV	MONT	20979	1	3	4	4	1	4	4	4	1	4	4	4	3	20	144444	03	2	16			1	2	222212
6024	76	CHEV	VEGA	9999	1	2	3	4	1	4	4	4	4	1	4	4	2	25	414444	03	2	22	24		4	2	222212
6025	76	CHEV	STAW	19806	1	2	5	3	2	4	4	4	4	3	2	4	1	14	234444	12	1	10			3	2	222212
6026	76	CHEV	ELCA	18700	1	2	4	2	3	4	4	4	3	4	4	2	3	06	324444	06	1	15	16	13	1	2	222212
6027	76	CHEV	NOVA	20514	1	3	3	4	4	4	1	4	1	4	4	4	3	55	441444	02	1				2	1	222212
6029	76	DODG	STAW	15884	1	3	3	1	4	4	4	4	4	4	4	1	3	40	441444	03	1	22			2	2	222212
6030	76	DODG	ASPE	3880	1	2	2	4	1	4	4	4	4	4	4	1	3	20	414444	02	2	19			4	2	222212
6031	76	FORD	MUST	7905	1	2	2	2	3	4	4	4	2	4	3	4	2	05	144444	03	2	25			1	2	222212
6032	76	FORD	STAW	15100	1	3	3	3	3	3	3	3	3	3	3	3	3	13	333444	02	4	10	12	11	1	2	222212
6033	76	FORD	STAW	20555	1	2	4	1	4	4	4	4	4	4	1	4	1	04	144444	03	1				1	2	222212
6034	76	FORD	GRAN	16280	1	3	3	4	1	4	4	4	2	3	4	4	3	18	234444	03	1	11			1	2	222212
6035	76	FORD	GRAN	9842	2	2	2	1	4	4	4	4	4	4	1	4	2	02	144444	02	1	15			1	2	222212
6036	76	FORD	TORI	7948	1	2	2	3	2	4	4	4	4	2	4	3	3	15	441444	04	1	16		13	2	2	222212
6037	76	MERC	COME	28574	2	2	2	4	1	4	4	4	2	4	4	3	3	18	144444	03	1	14			1	2	222212
6038	76	MERC	MONA	30644	1	3	5	3	2	4	4	4	4	4	1	4	1	15	414444	10	1				1	2	222212
6039	76	OLDS	CUTL	6579	1	2	3	4	1	4	4	4	4	1	4	4	3	30	441444	01	1	16			1	2	222212
6040	76	OLDS	CUTL	27286	1	3	3	2	3	4	4	4	2	4	3	4	3	12	144444	03	2		18		1	2	222212
6041	76	OLDS	DELT	10952	1	3	3	4	1	4	4	4	2	3	4	4	1	02	414444	03	1		17	10	4	2	222212
6042	76	PLYM	DUST	18696	1	2	4	1	4	4	4	4	1	4	4	4	2	18	144444	04	1	27			3	1	222212
6043	76	PLYM	VOLA	20183	1	2	5	4	1	4	4	4	4	4	4	1	3	04	144444	04	4	20	24	18	3	2	222212
6044	76	PONT	LEMA	10129	1	2	3	1	4	4	4	4	1	4	4	4	3	22	144444	04	1	17			3	2	222212
6045	76	PONT	GRNP	18291	1	2	5	1	4	4	4	4	4	4	1	4	3	10	414444	20	1				3	2	222212
6046	76	DATS	B210	46753	1	3	6	2	3	4	4	4	4	3	2	4	3	40	144444	05	1	36			1	2	222212
6047	76	DATS	B210	6963	1	2	2	4	1	4	4	4	2	3	4	4	3	20	144444	05	1		21	17	1	2	222212
6048	76	TOYO	CORO	10634	1	3	3	2	3	4	4	4	4	4	1	4	1	10	414444	10	1	22			1	2	222212
6049	76	TOYO	CELI	18593	1	3	4	1	4	4	4	4	4	4	1	4	3	10	144444	06	2	21			1	2	222212
6050	76	VOLK	SEDA	18493	1	3	3	4	1	4	4	4	4	1	4	4	3	06	144444	04	1	24			1	2	222212
6051	76	VOLK	RABB	18696	1	3	4	4	1	4	4	4	1	4	4	4	3	10	144444	04	1				1	2	222212
6201	76	AMC	STAW	32868	1	3	3	1	4	4	4	4	1	4	4	4	1	16	144444	03	2	18			1	2	222212
6202	76	AMC	HORN	4716	1	2	3	1	4	4	4	4	4	4	1	4	1	16	144444	20	3	14			1	2	222212
6203	76	AMC	MATA	16330	2	1	4	3	2	4	4	4	1	4	4	4	3	08	414444	06	1	15			3	2	222212
6204	76	AMC	HORN	22923	1	3	3	2	3	4	4	4	3	2	4	4	3	18	324444	04	1	18			1	2	222212

APPENDIX B

LISTING OF TEST VEHICLE USE DATA

ST. LOUIS

VEH	YR	MAKE	MODL	ODOM	N	PUR	YMT	F	C	O	I	R	W	S	B	V	L	MI	VEHUSE	TR	F	OA	HD	CD	H	U	DAMAGE
6205	76	BUIC	CNTY	31305	1	3	5	2	3	4	4	4	4	3	4	2	2	17	424444	03	1	19	21	17	1	2	222212
6206	76	BUIC	LASA	28878	1	3	5	4	1	4	4	4	4	4	1	4	3	10	144444	25	1	11			1	2	222212
6207	76	BUIC	REGA	17648	2	2	4	4	1	4	4	4	1	4	4	4	3	15	144444	03	1	15			1	2	222212
6208	76	BUIC	STAW	26007	1	3	5	2	3	4	4	4	4	4	1	4	1	10	144444	15	1			16	1	2	222212
6209	76	BUIC	LESA	13378	1	2	3	1	4	4	4	4	4	4	4	1	3	25	441444	02	1	15			1	2	222212
6210	76	BUIC	SKYH	17902	1	3	3	2	3	4	4	4	4	2	4	3	1	03	144444	03	1	18			2	2	222212
6211	76	BUIC	SKYL	9516	2	2	3	4	1	4	4	4	1	4	4	4	3	20	414444	03	1		24		1	2	222212
6212	76	CADI	SEVI	14469	2	1	3	3	2	4	4	4	4	2	4	4	1	06	144444	03	1	14			1	2	222212
6213	76	CADI	FLEE	9474	1	2	1	3	4	4	2	4	4	4	1	4	1	04	441444	15	2				4	2	222212
6215	76	CADI	DEVI	25807	1	3	4	2	3	4	4	4	4	4	1	4	3	11	414444	15	4	12			1	2	222212
6216	76	CHEV	CHET	36191	1	3	5	1	4	4	4	4	4	4	4	1	3	15	144444	08	1	30			4	2	222212
6217	76	CHEV	CAPR	31958	1	3	5	2	3	4	4	4	4	3	2	4	3	40	234444	02	1	13	15	11	4	2	222212
6218	76	CHEV	MONT	17272	1	3	4	4	1	4	4	4	1	4	4	4	2	03	144444	04	1				1	2	222212
6219	76	CHEV	STAW	16111	1	2	4	2	3	4	4	4	4	1	4	4	3	15	414444	06	1				2	2	222212
6220	76	CHEV	CAMA	19891	1	2	4	1	4	4	4	4	4	4	4	1	3	35	144444	04	4	18			3	2	222212
6221	76	CHEV	STAW	20481	1	2	5	2	3	4	4	4	4	3	2	4	2	15	244444	20	1	11			3	2	222212
6222	76	CHEV	CAMA	25488	1	3	3	1	4	4	4	4	1	4	4	4	3	02	414444	03	1	17			1	2	222212
6223	76	CHEV	CAPR	8777	1	2	3	2	3	4	4	4	4	2	4	3	3	07	342444	02	1	15	16	14	4	2	222212
6224	76	CHEV	MONT	11591	1	3	3	1	4	4	4	4	1	4	4	4	3	15	144444	02	1	28			1	2	222212
6225	76	CHEV	IMPA	46441	1	3	5	4	1	4	4	4	3	4	2	4	2	10	144444	06	1	15			3	2	222212
6226	76	CHEV	CAMA	4588	1	2	1	1	4	4	4	4	1	4	4	4	3	10	144444	02	1	18			1	2	222212
6227	76	CHEV	MONT	14000	1	2	5	4	1	4	4	4	1	4	4	4	2	30	414444	03	1	17			4	2	222212
6228	76	CHEV	VEGA	11561	1	3	2	3	2	4	4	4	2	4	4	4	2	25	144444	02	1	20			2	2	222212
6229	76	CHEV	MONZ	8778	2	2	3	4	1	4	4	4	1	4	4	4	3	30	144444	03	1				3	2	222212
6230	76	CHEV	MONT	13553	1	3	3	2	3	4	4	4	1	4	4	4	3	06	414444	03	1	13	16		2	2	222212
6231	76	CHEV	CAMA	19849	1	2	5	1	4	4	4	4	1	4	4	4	3	20	144444	04	3	16			3	2	222212
6232	76	CHEV	CAMA	13057	2	2	3	4	1	4	4	4	1	4	4	4	3	17	414444	06	2				1	2	222212
6233	76	CHEV	MALI	3879	1	3	1	1	4	4	4	4	1	4	4	4	3	18	144444	06	1				2	2	222212
6234	76	CHEV	NOVA	22089	1	2	5	2	3	4	4	4	2	3	4	4	3	30	144444	02	1				3	2	222212
6235	76	CHEV	CHET	9218	1	2	2	2	3	4	4	4	2	4	4	3	3	17	234444	03	1	22	26	17	1	2	222212
6236	76	CHEV	IMPA	9607	1	3	2	2	3	4	4	4	3	4	4	2	3	05	144444	05	1				1	2	222212
6237	76	CHEV	MALI	38284	1	2	6	1	4	4	4	4	4	4	1	4	2	15	144444	10	1	15			3	2	222212
6238	76	CHEV	VEGA	19792	1	2	5	1	4	4	4	4	1	4	4	4	2	07	414444	02	1	22			2	2	222212
6239	76	CHEV	NOVA	7504	1	2	2	3	2	4	4	4	2	3	4	4	1	03	144444	02	1	13			1	2	222212
6240	76	CHRY	CORD	6798	1	3	1	3	2	4	4	4	2	3	4	4	2	04	144444	05	1				1	2	222212
6241	76	CHRY	NEWY	8575	1	2	3	1	4	4	4	4	4	4	1	4	3	07	144444	16	1		16		1	2	222212
6242	76	DODG	CHAR	17887	2	1	3	4	1	4	4	4	1	4	4	4	1	03	144444	05	1	17			1	2	222212
6243	76	DODG	MONA	21849	1	3	4	2	3	3	4	4	2	4	4	3	3	15	144444	02	2	12			1	2	222212
6244	76	DODG	ASPE	10803	1	3	3	2	3	4	4	4	4	4	4	1	1	05	414444	02	1				1	2	122222
6245	76	DODG	MONA	13000	2	2	5	4	1	4	4	4	2	3	4	4	3	10	414444	03	1	15			3	2	222212
6246	76	DODG	STAW	22144	1	2	5	2	3	4	4	4	4	4	1	4	3	15	144444	04	3	17			1	2	222212
6247	76	DODG	ASPE	12088	1	2	4	4	1	4	4	4	2	3	4	4	3	06	414444	04	3	18			1	2	222212
6248	76	FORD	STAW	8663	2	1	4	1	4	4	4	4	4	4	2	3	3	17	414444	12	2		15	15	1	2	222212
6249	76	FORD	ELIT	11729	1	2	3	1	4	4	4	4	2	3	4	4	3	15	414444	04	2	15			1	2	222212
6250	76	FORD	MAVE	30543	1	3	4	1	4	4	4	4	2	3	4	4	2	10	441444	09	1	26			1	2	222212
6251	76	FORD	THUN	32569	1	3	6	1	4	4	4	4	4	4	1	4	3	20	144444	04	1	13			1	2	222212
6252	76	FORD	MUST	31972	1	3	5	1	4	4	4	4	4	4	1	4	2	20	144444	25	1	35	33	25	1	2	222212
6253	76	FORD	MAVE	3329	1	2	3	3	2	4	4	4	4	3	2	4	1	10	144444	20	2	17			3	2	222212
6254	76	FORD	GRAN	5569	1	2	2	2	3	4	4	4	4	4	2	4	1	03	234444	02	1				1	2	222212
6255	76	FORD	PINT	25649	1	2	5	2	3	4	4	4	4	1	4	4	3	15	234444	03	2	25			1	2	222212

APPENDIX B

LISTING OF TEST VEHICLE USE DATA

ST. LOUIS

VEH	YR	MAKE	MODL	ODOM	N	PUR	YMT	F	C	O	I	R	W	S	B	V	L	MI	VEHUSE	TR	F	OA	HD	CD	H	U	DAMAGE
6256	76	FORD	ELIT	20232	2	2	5	1	4	4	4	4	1	4	4	4	3	10	441444	11	1				1	2	222212
6257	76	FORD	STAW	3894	1	2	2	4	1	4	4	4	4	1	4	4	3	24	414444	04	1	23			1	2	222212
6258	76	FORD	GRAN	4004	1	2	2	3	2	4	4	4	2	3	4	4	1	05	234444	04	1				4	2	222212
6259	76	FORD	PINT	23952	1	3	4	2	3	4	4	4	1	4	4	4	2	30	144444	02	4	28	30	25	4	2	222212
6260	76	FORD	STAW	12621	1	2	3	4	1	4	4	4	4	4	4	1	3	11	144444	06	1	12			4	2	222212
6261	76	FORD	LTD	14150	1	3	3	1	4	4	4	4	2	3	4	4	2	10	144444	02	1	11	12	10	2	2	222212
6262	76	FORD	THUN	10881	1	2	2	4	2	4	4	4	4	2	4	4	1	02	144444	02	1	15			4	2	222212
6263	76	FORD	MUST	7006	1	3	2	1	4	4	4	4	4	1	4	4	1	15	144444	02	1	15			1	2	222212
6264	76	FORD	ELIT	11880	1	3	2	4	1	4	4	4	4	4	4	1	2	12	414444	02	1	11			1	2	222212
6265	76	FORD	ELIT	17132	1	2	4	2	3	4	4	4	2	3	4	4	3	15	414444	04	1	15			1	2	222212
6266	76	FORD	GRAN	6088	1	2	2	2	3	4	4	4	4	4	2	4	1	02	234444	02	1				2	2	222212
6267	76	FORD	PINT	4009	1	2	2	3	2	4	4	4	2	3	4	4	1	02	244444	02	1	17			1	2	222212
6268	76	LINC	MRK4	23485	1	2	5	4	1	4	4	4	4	3	4	2	2	30	414444	06	1	09			1	2	222212
6270	76	MERC	MONG	8054	1	2	4	2	3	4	4	4	1	4	4	4	2	07	144444	02	1	18			1	2	222212
6271	76	MERC	MARQ	23364	1	3	4	2	3	4	4	4	1	4	4	4	1	05	144444	02	1		18		1	2	222212
6272	76	MERC	COUG	21328	1	3	4	2	3	4	4	4	4	4	1	4	1	03	144444	10	1	11	15		1	2	222212
6273	76	MERC	STAW	29718	1	3	5	4	1	4	4	4	4	1	4	4	3	20	441444	04	1	11			1	2	222212
6274	76	MERC	MONA	14542	1	2	4	1	4	4	4	4	1	4	4	4	1	12	342444	06	1				1	2	222212
6275	76	OLDS	CUTL	13158	1	2	3	2	3	4	4	4	4	4	2	4	3	06	144444	04	1	17			3	2	222212
6276	76	OLDS	CUTL	12025	1	2	3	3	2	4	4	4	2	3	4	4	1	04	234444	02	1	15	21	15	1	2	222212
6277	76	OLDS	OMEG	4192	1	2	1	4	1	4	4	4	4	1	4	4	2	10	144444	04	1		17	12	4	2	222212
6279	76	OLDS	STAW	34338	1	2	5	4	1	4	4	4	1	4	4	4	3	18	441444	07	1		14		3	2	222212
6280	76	OLDS	CUTL	7915	1	2	3	2	3	4	4	4	2	3	4	4	3	20	244444	02	1	16			1	2	222212
6281	76	OLDS	CUTL	16780	1	2	4	2	3	4	4	4	2	3	4	4	2	20	144444	03	1	17	20	13	2	2	222212
6282	76	OLDS	CUTL	19743	1	2	4	1	4	4	4	4	1	4	4	4	3	16	414444	02	1				1	2	222212
6283	76	OLDS	NINE	38887	1	3	5	1	4	4	4	4	4	4	1	4	1	08	144444	04	1		15		1	2	222212
6284	76	PLYM	VOLA	14632	2	2	3	2	3	4	4	4	2	4	4	2	17	234444	03	1	18				4	2	222212
6285	76	PLYM	STAW	6466	1	3	2	2	3	4	4	4	4	2	4	3	3	10	414444	02	1		18	13	1	1	222212
6286	76	PLYM	FURY	3838	1	1	3	4	1	4	4	4	2	3	4	4	3	10	414444	07	3				1	2	222212
6287	76	PLYM	VOLA	14604	1	3	4	1	4	4	4	4	4	1	4	4	3	22	144444	08	2	17			4	2	222212
6288	76	PLYM	STAW	17621	1	3	4	4	4	1	4	4	4	1	4	4	1	06	441444	04	1				1	2	222212
6289	76	PLYM	STAW	5239	1	2	4	1	4	4	4	4	1	4	4	4	1	10	414444	04	1	14			1	2	222212
6290	76	PLYM	STAW	11305	2	2	4	2	3	4	4	4	4	3	2	4	3	20	234444	04	2	15			4	2	222212
6291	76	PONT	SUNB	19477	1	3	4	2	3	4	4	4	4	3	2	4	3	05	144444	08	4	17			4	2	222212
6292	76	PONT	BONN	14043	1	3	3	4	1	4	4	4	4	1	4	4	3	30	441444	02	1	13			1	2	222212
6293	76	PONT	GRNP	16866	1	3	4	2	3	4	4	4	2	3	4	4	3	21	144444	04	1	16			4	2	222212
6294	76	PONT	LEMA	13737	1	2	3	4	1	4	4	4	1	4	4	4	3	20	144444	04	1				1	2	222212
6295	76	PONT	CATA	32643	1	3	5	2	3	4	4	4	2	4	4	3	3	15	243444	06	4	14			3	2	222212
6296	76	PONT	FIRE	15317	1	2	4	3	2	4	4	4	4	2	4	3	3	15	144444	03	1	15			4	2	222212
6297	76	PONT	GRNP	17391	2	2	3	4	4	1	4	4	4	1	4	4	3	24	441444	02	1	17			3	2	222212
6298	76	PONT	VENT	12599	1	3	3	3	2	4	4	4	2	3	4	4	2	12	144444	02	1	14	19	16	2	2	222212
6299	76	CAPR	COUP	22107	1	3	4	2	3	4	4	4	4	4	1	4	3	15	144444	04	1	18			1	2	222212
6300	76	DODG	COLT	2076	1	2	2	2	3	4	4	4	2	3	4	4	3	15	414444	02	1				1	2	222212
6301	76	DATS	B210	5759	1	2	3	1	4	4	4	4	2	3	4	4	3	15	414444	04	1	23			1	2	222212
6302	76	DATS	STAW	11706	1	3	2	4	1	4	4	4	4	2	4	3	3	22	234444	03	1	19	23	17	1	2	222212
6303	76	DATS	B210	19818	1	3	4	1	4	4	4	4	1	4	4	4	3	30	234444	10	3	32			1	2	222212
6304	76	FIAT	128	19328	1	3	3	1	4	4	4	4	1	4	4	4	3	12	144444	03	1				1	1	222212
6305	76	FIAT	131	1213	1	2	1	4	1	4	4	4	1	4	4	4	3	25	144444	03	1				1	2	222212
6306	76	HOND	CIVI	8506	1	2	3	1	4	4	4	4	1	4	4	4	3	22	144444	04	1	26			1	2	222212
6307	76	HOND	ACCO	10382	1	2	5	1	4	4	4	4	4	4	1	4	1	15	144444	05	1	31			1	2	222212

APPENDIX B

LISTING OF TEST VEHICLE USE DATA

ST. LOUIS

VEH	YR	MAKE	MODL	ODOM	N	PUR	YMT	F	C	O	I	R	W	S	B	V	L	MI	VEHUSE	TR	F	OA	HD	CD	H	U	DAMAGE
6308	76	MAZD	RX4	19243	1	3	3	2	3	4	4	4	1	4	4	4	3	20	144444	02	1	20			1	2	222212
6309	76	TOYO	CORO	22267	1	3	4	4	1	4	4	4	4	4	4	1	3	25	414444	04	1	25			1	2	222212
6310	76	TOYO	CORO	7142	1	2	3	1	4	4	4	4	1	4	4	4	3	25	144444	06	1	24			1	2	222212
6311	76	TOYO	CELI	17499	1	2	5	1	4	4	4	4	1	4	4	4	3	18	144444	04	1	18			1	2	222212
6312	76	TOYO	CORO	5261	1	3	2	1	4	4	4	4	1	4	4	4	3	27	144444	02	1	18			1	2	222212
6313	76	VOLK	RABB	16374	1	2	3	2	3	4	4	4	1	4	4	4	3	20	414444	06	1	28			1	2	222212
6314	76	VOLK	RABB	10022	1	3	3	4	1	4	4	4	2	4	3	4	2	15	144444	04	1	25			1	2	222212
6315	76	VOLK	RABB	4865	1	3	1	4	4	2	4	4	4	4	2	3	3	17	144444	02	2		35	26	1	2	222212
6316	76	VOLV	264G	17791	1	3	3	1	4	4	4	4	4	4	1	4	3	10	144444	02	1	16			1	2	222212
5052	75	AMC	GREM	23759	1	3	3	3	2	4	4	4	2	3	4	4	1	02	342444	02	1			17	1	2	222212
5053	75	BUIC	STAW	21856	1	3	3	4	2	3	4	4	4	2	4	3	3	15	342444	06	2	13			1	2	222212
5054	75	BUIC	ELEC	20109	1	3	3	1	4	4	4	4	2	4	3	4	3	12	414444	04	2				3	2	222212
5055	75	CADI	DEVI	26650	2	1	3	4	1	4	4	4	4	4	1	4	2	10	144444	10	1	10			1	2	222212
5056	75	CHEV	MONZ	24707	1	3	3	1	4	4	4	4	1	4	4	4	1	07	441444	02	1	21			1	2	222212
5057	75	CHEV	MONT	31904	1	3	3	2	3	4	4	4	4	3	2	4	3	35	234444	25	2	16	20	15	4	2	222212
5058	75	CHEV	MALI	49135	1	4	5	2	3	4	4	4	4	3	2	4	3	05	144444	10	1	15			3	2	222212
5059	75	CHEV	STAW	16329	1	3	2	4	4	1	4	4	4	2	4	3	3	30	414444	02	1	12			1	2	222212
5060	75	CHEV	CAMA	19574	1	3	2	1	4	4	4	4	1	4	4	4	2	25	414444	04	1	15			1	2	222212
5061	75	CHRY	CORD	17233	1	3	3	1	4	4	4	4	1	4	4	4	3	10	144444	04	1	12			1	2	222212
5062	75	DODG	DART	22453	2	2	3	4	1	4	4	4	3	3	3	4	3	20	144444	08	1	20			1	2	222212
5063	75	FORD	PINT	11477	2	2	2	3	2	4	4	4	4	2	4	4	3	25	144444	02	1				1	2	222212
5064	75	FORD	MAVE	14951	1	3	2	4	1	4	4	4	4	2	4	3	2	05	414444	02	2				1	2	222212
5065	75	FORD	LTD	38365	1	4	3	2	3	4	4	4	1	4	4	4	3	08	414444	06	3	14			1	2	222212
5066	75	FORD	GRAN	13109	1	3	2	3	2	4	4	4	4	2	4	3	1	01	234444	02	1	14			1	2	222212
5067	75	FORD	GRAN	17656	1	3	3	2	3	4	4	4	4	2	4	3	3	14	424444	02	1	15	17	13	1	2	222212
5068	75	MERC	MONG	23940	1	3	4	3	3	3	3	4	2	3	4	4	3	16	234444	02	4	15	17	12	5	2	222212
5069	75	OLDS	CUTL	28445	1	4	3	3	2	4	4	4	2	3	4	4	2	09	424444	05	1	08			1	2	222212
5070	75	OLDS	98	20884	1	3	4	3	2	4	4	4	2	3	4	4	1	08	144444	06	1	12			4	2	222212
5071	75	PLYM	VALI	12752	1	3	2	4	1	4	4	4	1	4	4	4	3	03	441444	05	1	16			4	2	222212
5072	75	PLYM	VALI	24141	1	3	3	1	4	4	4	4	4	1	4	4	1	13	414444	10	2	09			1	2	222212
5073	75	PONT	CATA	31782	1	4	3	3	2	4	4	4	4	2	4	4	3	12	424444	05	1	15			1	2	222212
5074	75	PONT	FIRE	22435	1	4	3	1	4	4	4	4	4	4	4	1	3	15	414444	04	1	12			3	2	222212
5075	75	DATS	B210	14689	1	3	2	4	1	4	4	4	1	4	4	4	1	12	144444	02	1	22			1	2	222212
5076	75	TOYO	CELI	33036	1	3	5	2	3	4	4	4	2	4	4	3	2	05	234444	04	2	25	29	22	1	2	222212
5077	75	TOYO	CORO	12099	1	3	2	3	2	3	4	4	2	3	4	3	3	20	324444	02	1	22	25	20	1	2	222212
5078	75	VOLK	SCIR	29360	1	4	3	1	4	4	4	4	1	4	4	4	3	07	144444	03	3	30			1	2	222212
5317	75	AMC	MATA	24433	1	4	3	3	2	4	4	4	2	3	4	4	3	06	144444	03	1	12			1	2	222212
5318	75	BUIC	SKYH	16219	1	3	2	3	2	4	4	4	4	3	2	4	2	12	234444	04	1	19	22	16	4	2	222212
5320	75	CHEV	MONZ	36605	1	3	5	1	4	4	4	4	4	4	1	4	1	07	144444	06	2	25			4	2	222212
5321	75	CHEV	IMPA	25161	2	2	3	1	4	4	4	4	4	1	4	4	3	07	144444	04	1	17			1	2	222212
5322	75	CHEV	STAW	31353	2	2	2	3	2	4	4	4	4	2	4	4	3	20	424444	05	2				1	2	222212
5323	75	CHEV	CAMA	17677	1	3	2	1	4	4	4	4	1	4	4	4	3	30	144444	02	1	14			1	2	222212
5324	75	CHEV	IMPA	25447	2	3	3	2	3	4	4	4	1	4	4	4	2	20	144444	06	1	13			1	2	222212
5325	75	DODG	DART	20382	1	3	3	2	3	4	4	4	1	4	4	4	3	12	144444	02	1	20			3	2	222212
5326	75	FORD	MUST	17833	1	3	4	4	1	4	4	4	4	4	4	1	3	25	144444	04	1			18	1	2	222212
5327	75	FORD	LTD	34765	1	3	4	1	4	4	4	4	1	4	4	4	3	10	414444	02	1				1	2	222212
5328	75	FORD	LTD	25784	1	4	2	3	2	4	4	4	4	2	4	3	3	15	234444	05	2	13			1	2	222212
5329	75	LINC	MRK4	17049	2	2	2	4	1	4	4	4	4	4	1	4	3	05	144444	06	1	07			1	2	222212
5330	75	MERC	COUG	20657	1	3	3	4	1	4	4	4	2	3	4	4	3	10	234444	03	1	28	35	21	2	2	222212
5331	75	OLDS	CUTL	24694	1	3	3	2	3	4	4	4	2	3	4	4	2	20	324444	02	1	19	23	15	1	2	222212

APPENDIX B

LISTING OF TEST VEHICLE USE DATA

ST. LOUIS

VEH	YR	MAKE	MODL	ODOM	N	PUR	YMT	F	C	O	I	R	W	S	H	V	L	MI	VEHUSE	TR	F	OA	HD	CD	H	U	DAMAGE
5332	75	OLDS	CUTL	21847	1	3	3	2	3	4	4	4	1	4	4	4	3	13	144444	04	1	17	18	16	1	2	222212
5333	75	PLYM	FURY	38220	1	3	3	2	3	4	4	4	4	3	2	4	2	15	244444	15	1	19			2	2	222212
5334	75	PONT	GRNP	38333	1	3	4	1	4	4	4	4	4	4	1	4	3	12	234444	03	3	11			4	2	222212
5335	75	DATS	710	23471	1	3	3	4	1	4	4	4	3	4	2	4	1	10	414444	02	3	24			1	2	222212
5336	75	FIAT	131	12215	1	3	3	2	3	4	4	4	3	3	3	4	3	25	144444	03	1	18			1	2	222212
5337	75	HOND	CVCC	25796	1	3	4	4	1	4	4	4	1	4	4	4	3	30	144444	04	3	27			1	2	222212
5338	75	MAZD	STAW	28571	1	3	3	1	4	4	4	4	1	4	4	4	3	17	414444	02	1	17			1	2	222212
4080	74	AMC	AMBA	35134	2	3	5	1	4	4	4	4	4	4	1	4	2	15	234444	10	1	12	15	10	1	2	222212
4081	74	BUIC	CNTY	35535	1	4	3	3	2	4	4	4	1	4	4	4	2	35	144444	06	2	12			1	2	222212
4082	74	CADI	DEVI	47173	2	2	3	3	2	4	4	3	2	4	4	3	3	09	234444	02	1	11	13	10	1	2	222212
4083	74	CHEV	VEGA	42111	1	3	4	3	4	4	2	4	2	3	4	4	2	25	144444	04	1		23		1	2	222212
4084	74	CHEV	CHEL	33271	1	3	3	2	4	4	3	4	4	2	3	4	2	10	414444	02	1	14	15	13	1	2	222212
4085	74	CHEV	NOVA	23082	1	3	2	4	1	4	2	4	2	4	4	3	3	10	314444	04	1	24	24	18	1	2	222212
4086	74	CHEV	NOVA	33558	1	3	3	2	4	4	4	4	1	4	4	3	2	10	144444	02	1		14		1	2	222212
4087	74	CHEV	CHEL	11587	1	3	2	1	4	4	4	4	2	3	4	4	1	01	414444	03	1	13	14	11	1	2	222212
4088	74	CHEV	STAW	41811	2	3	3	2	3	4	4	4	1	4	4	4	2	20	144444	02	1	12	14	10	1	2	222212
4089	74	CHRY	NEWP	56513	1	4	3	3	2	4	4	4	4	3	2	4	3	30	144444	08	2	13	16	10	1	2	222212
4090	74	DODG	CHAR	19117	1	4	2	1	4	4	4	4	1	4	4	4	2	06	144444	04	1	11			1	2	222212
4091	74	FORD	PINT	23573	1	4	2	3	3	4	4	4	4	3	4	3	1	01	414444	06	1	16	19	14	1	2	222212
4092	74	FORD	TORI	50787	1	3	5	2	4	4	3	4	2	3	4	4	2	15	144444	03	1		16		1	2	222212
4093	74	FORD	PINT	32884	2	2	2	1	4	4	4	4	1	4	4	4	3	10	144444	02	1	23			1	2	222212
4094	74	FORD	STAW	29919	1	3	2	4	2	4	4	4	4	2	4	4	1	10	441444	02	1				1	2	222212
4095	74	FORD	STAW	65689	2	2	4	2	3	4	4	4	3	3	3	4	1	03	442444	06	1	15	16	14	1	2	222212
4096	74	MERC	MONT	45802	1	4	3	4	1	4	4	4	1	4	4	4	3	18	414444	03	1	14			1	2	222212
4097	74	OLDS	CUTL	26656	1	4	2	2	3	4	4	4	2	3	4	4	3	30	414444	06	1	12	13	12	1	2	222212
4098	74	OLDS	STAW	37151	1	3	3	2	4	4	4	4	2	3	4	4	1	04	144444	04	1	11	12	09	1	2	222212
4099	74	PLYM	SCAM	37460	1	4	3	2	3	4	4	4	2	3	4	4	1	12	424444	02	1	17	20	15	1	2	222212
4100	74	PLYM	DUST	30579	2	2	2	3	2	4	4	4	2	3	4	4	1	12	324444	02	1	17	20	15	1	2	222212
4101	74	PONT	GRNP	37653	1	3	3	2	3	4	4	4	1	4	4	4	2	25	144444	04	1				1	2	222212
4102	74	DATS	710	56631	1	4	5	4	1	4	4	4	4	4	1	4	3	12	144444	08	1	22			1	2	222212
4103	74	TOYO	CORO	36035	1	3	3	2	3	4	4	4	1	4	4	4	2	15	144444	01	4	26			1	2	222212
4104	74	TOYO	STAW	17805	1	3	2	1	4	4	4	4	4	1	4	4	2	09	414444	02	1	20			1	2	222212
4105	74	VOLK	SEDA	26680	1	3	3	1	3	4	4	4	4	2	4	4	1	19	441444	01	1		25	20	1	2	222212
4106	74	VOLK	SEDA	44344	1	3	3	2	3	4	4	4	2	3	4	4	2	25	234444	02	1	26	28	25	1	2	222212
4339	74	AMC	HORN	43305	1	4	4	2	3	4	4	4	2	4	4	4	2	06	442444	03	1	16	18	12	1	2	222212
4340	74	BUIC	REGA	33133	1	4	3	2	4	4	4	4	1	4	4	4	2	35	144444	04	1				1	2	222212
4341	74	BUIC	RIVI	62718	1	4	4	1	4	4	4	4	4	4	4	1	3	13	144444	05	1	14			1	2	222212
4342	74	CHEV	CHEL	24534	1	4	3	3	2	4	4	4	3	2	4	3	1	03	234444	06	1	12	14	11	1	2	222212
4343	74	CHEV	MONT	29887	2	3	3	4	4	4	2	4	4	4	4	1	3	08	414444	02	1	18			1	2	222212
4344	74	CHEV	CHEL	36865	2	3	3	4	4	2	4	4	2	3	4	4	2	07	424444	04	3	15	16	12	1	2	222212
4345	74	CHEV	STAW	37798	2	3	2	4	4	1	4	4	4	1	4	4	1	05	144444	02	2	12	13	10	1	2	222212
4346	74	CHEV	VEGA	30127	1	3	3	3	2	4	4	4	1	4	4	4	2	23	144444	02	1				1	2	222212
4347	74	DODG	DART	69511	1	3	5	3	4	4	2	4	1	2	4	4	1	01	441444	04	1	15	16	13	1	2	222212
4348	74	DODG	DART	31981	2	3	4	3	4	4	3	4	2	3	4	4	2	09	243444	03	1	15	17	14	1	2	222212
4349	74	FORD	TORI	17967	1	4	2	2	3	4	4	4	2	3	4	4	1	05	414444	05	1	15	17	13	1	2	222212
4350	74	FORD	GALA	36308	1	4	3	3	2	4	4	4	4	3	4	2	2	25	441444	02	1				1	2	222212
4351	74	FORD	LTD	47919	1	3	5	2	3	4	4	4	4	2	4	4	2	12	424444	04	1	14	17	13	1	2	222212
4352	74	FORD	MUST	38135	2	2	2	3	2	4	4	4	2	3	4	4	1	03	244444	04	1	17	20	16	1	2	222212
4353	74	LINC	MRK4	45471	2	2	3	1	4	4	4	4	4	4	4	1	1	09	441444	04	1		14	12	1	2	222212
4354	74	MERC	MONG	23416	1	4	3	3	2	4	4	4	3	4	4	3	1	03	234444	06	2	12	14	10	1	2	222212

APPENDIX B

LISTING OF TEST VEHICLE USE DATA

ST. LOUIS

VEH	YR	MAKE	MODL	ODOM	N	PUR	YMT	F	C	O	I	R	W	S	B	V	L	MI	VEHUSE	TR	F	OA	HD	CD	H	U	DAMAGE
4355	74	OLDS	CUTL	24836	2	1	3	4	2	3	4	4	1	4	4	4	3	05	234444	04	2	10	15	09	1	2	222221
4356	74	PLYM	FRY3	23875	1	4	3	4	4	4	1	4	4	4	4	1	2	30	144444	02	1	18	18		1	2	222212
4357	74	PONT	BONN	17611	1	4	2	2	4	3	4	4	3	3	4	4	1	05	414444	04	2	13	16	11	1	2	222212
4358	74	PONT	LEMA	42699	1	4	4	1	3	4	4	4	2	3	4	4	3	05	414444	02	1	13	14	12	1	2	212222
4359	74	CAPR	SPOR	36726	1	4	3	4	1	4	4	4	1	4	4	4	3	10	144444	04	1	20			1	2	222212
4360	74	DATS	B210	26278	1	3	4	1	4	4	4	4	3	4	4	2	3	35	441444	04	1	32	36	30	1	2	222212
4361	74	MAZD	STAW	29016	1	4	3	4	1	4	4	4	2	3	4	4	1	08	441444	05	1	12			1	2	222212
3107	73	AMC	GREM	45122	1	4	3	3	4	4	4	4	2	3	4	4	3	12	324444	04	2	18	19	16	1	2	212222
3108	73	BUIC	CNTR	50300	1	4	3	2	3	4	4	4	4	2	4	4	1	05	441444	05	2	13	14	12	1	2	222212
3109	73	BUIC	CNTY	58752	1	4	3	1	4	4	4	4	2	3	4	4	1	02	441444	02	1	12	13	10	1	2	222212
3110	73	CADI	DEVI	46391	2	2	3	2	4	4	3	4	2	4	4	3	2	12	424444	06	1		12		1	2	222212
3111	73	CHEV	VEGA	38004	1	4	3	1	4	4	4	4	1	4	4	4	2	20	144444	02	3	22	23	20	1	2	222212
3112	73	CHEV	MONT	48169	2	4	3	1	3	4	4	4	2	3	4	3	2	08	134444	03	2				1	2	222212
3113	73	CHEV	CAMA	55759	1	4	3	4	2	4	3	4	1	4	4	4	1	03	144444	03	2	15	18	13	1	2	222212
3114	73	CHEV	IMPA	52172	2	3	3	3	2	4	4	4	3	2	4	4	1	02	324444	06	1	13	15	17	1	2	222212
3115	73	CHEV	IMPA	39467	1	4	3	3	2	4	4	4	2	3	4	4	2	19	324444	02	3	11	13	09	1	2	222212
3116	73	DODG	DART	11638	1	4	1	3	2	4	4	4	2	3	4	4	1	10	441444	05	3	18	20	16	1	2	222212
3117	73	FORD	PINT	24104	1	4	2	4	4	4	4	1	4	1	4	4	3	40	144444	02	1	14			1	2	222212
3118	73	FORD	TORI	63006	1	4	5	4	2	4	4	4	2	3	4	4	2	10	144444	02	1	14	15	13	1	2	222212
3119	73	FORD	MUST	42851	2	3	3	2	3	4	4	4	3	3	4	4	2	10	243444	02	1		15	12	1	2	222212
3120	73	FORD	TORI	39637	1	4	3	3	2	4	4	4	2	4	4	3	1	20	423444	04	1	12	14	10	1	2	222212
3121	73	FORD	STAW	37396	1	4	2	2	3	4	4	4	4	2	4	4	3	25	324444	02	1				2	1	222212
3122	73	MERC	MONG	52537	2	4	3	3	2	4	4	4	1	4	4	4	1	15	144444	10	3				2	2	222212
3123	73	OLDS	TORO	63523	2	1	3	2	3	4	4	4	2	4	4	3	3	20	424444	04	1	10	12	08	1	2	222212
3124	73	OLDS	CUTL	43162	2	1	3	4	3	4	4	4	2	3	4	3	1	05	424444	04	4				5	2	222221
3125	73	PLYM	SATE	78870	1	4	4	4	4	4	2	4	2	3	4	4	2	05	424444	04	1	14	15	12	1	2	222212
3126	73	PLYM	VALI	59432	1	4	3	2	3	4	4	4	4	4	4	1	2	15	144444	05	1				1	2	222122
3127	73	PONT	GRNV	46129	1	4	4	1	4	4	4	4	1	4	4	4	2	13	243444	03	1	10			1	2	222212
3128	73	PONT	LEMA	42309	2	2	3	1	4	4	4	4	1	4	4	4	2	35	144444	04	1				1	2	222212
3129	73	DATS	STAW	35694	1	4	3	3	2	4	4	4	2	3	4	4	1	12	423444	02	1	25	28	20	1	2	222212
3130	73	OPEL	STAW	34883	2	4	3	1	4	4	4	4	4	2	3	4	3	07	144444	02	2	20			1	2	222212
3131	73	TOYO	CARI	33121	1	4	3	3	2	4	4	4	2	3	4	4	3	15	324444	03	1	28	30	25	1	2	222212
3132	73	VOLK	SEDA	34710	1	4	2	4	1	4	4	4	1	4	4	4	2	17	414444	06	4	20			1	2	222212
3133	73	VOLK	SEDA	31307	2	3	2	3	2	4	4	4	1	4	4	4	2	07	414444	02	3	23	20	25	1	2	222212
3362	73	BUIC	CNTY	30206	1	4	3	4	1	4	4	4	1	4	4	4	1	07	144444	04	1	14	15	12	1	1	222212
3363	73	BUIC	RIVE	34620	2	2	2	2	3	4	4	4	2	3	4	4	2	05	144444	02	3		14	09	1	2	222212
3364	73	CHEV	STAW	45024	2	3	3	3	2	4	4	4	3	2	4	4	2	07	441444	02	4	10	12	08	1	2	222212
3365	73	CHEV	VEGA	30322	1	4	2	3	2	4	4	4	2	3	4	4	2	04	144444	02	1	20	22	17	1	2	222212
3366	73	CHEV	NOVA	41097	1	4	3	2	3	4	4	4	3	4	4	4	2	11	234444	04	1				1	2	222212
3367	73	CHEV	IMPA	43238	2	3	3	4	1	4	4	4	4	1	4	4	3	15	342444	04	1	14	16	13	1	2	222212
3368	73	CHEV	CAMA	57564	2	4	3	3	3	3	4	4	3	4	2	4	2	25	234444	04	4	12	15	10	1	2	222212
3369	73	CHEV	STAW	90075	2	4	5	1	4	4	4	4	4	1	4	2	08	244444	40	1	05	08	05	1	2	222212
3370	73	CHRY	NEWP	53926	1	4	3	2	3	4	4	4	3	3	3	3	2	05	433443	03	1	10	12	08	1	2	222212
3371	73	DODG	CHAR	31799	1	4	3	4	1	4	4	4	2	3	4	4	1	10	414444	02	1	15	18	12	1	2	222212
3372	73	DODG	STAW	54274	1	4	3	1	4	4	4	4	1	4	4	4	3	20	144444	05	1				1	2	222212
3373	73	FORD	PINT	57120	1	4	4	2	3	4	4	4	2	4	4	4	1	04	424444	03	1	20	22	19	1	2	222212
3374	73	FORD	TORI	52235	1	4	4	3	2	4	4	4	3	3	3	3	1	06	234444	12	1	12	14	10	1	2	222212
3375	73	FORD	STAW	58261	2	4	3	2	3	4	4	4	2	4	3	3	05	234444	02	1	12				1	2	222212
3376	73	FORD	STAW	70215	1	4	4	1	4	4	4	4	4	1	4	1	09	144444	20	2	10				1	2	222212
3377	73	MERC	MONG	21781	1	4	2	2	3	4	4	4	4	2	3	4	3	30	442434	02	2	14	16	12	1	2	222212

APPENDIX H

LISTING OF TEST VEHICLE USE DATA

ST. LOUIS

VEH	YR	MAKE	MODL	ODOM	N	PUR	YMT	F	C	O	I	R	W	S	H	V	L	MI	VEHUSE	TR	F	OA	HD	CD	H	U	DAMAGE
3378	73	OLDS	DELT	62288	1	4	4	2	3	4	4	4	3	4	2	4	3	05	442444	02	1	13	15	11	1	2	222212
3379	73	OLDS	NNTY	49321	1	4	3	1	4	4	4	4	2	3	4	4	2	10	144444	02	1	12	14	10	1	2	212222
3380	73	PLYM	FRY3	32694	1	4	3	3	2	4	4	4	2	4	3	4	2	20	234444	04	1	17	19	14	1	2	222212
3381	73	PONT	VENT	10767	1	4	1	2	3	4	4	4	4	1	4	4	1	12	414444	02	1	10	12	10	1	2	222212
3382	73	PONT	GRNV	52422	2	3	3	2	3	4	4	4	1	3	4	4	2	12	342444	02	1				1	2	222212
3383	73	MERC	CAPR	29571	1	4	2	3	2	4	4	4	2	3	4	4	1	05	442444	04	4				1	2	222212
3384	73	MAZD	RX3	49278	2	2	3	1	4	4	4	4	4	1	4	4	2	12	144444	03	1	18	25	14	1	2	222212
2134	72	AMC	MATA	53443	1	4	2	4	2	4	4	4	4	1	4	4	3	12	324444	02	1	19	21	20	1	2	222212
2135	72	BUIC	ELEC	57331	1	4	3	3	3	4	4	4	1	4	4	3	3	18	244444	02	2				1	2	222212
2136	72	CADI	CALA	37824	2	4	2	4	3	4	2	4	4	2	4	3	1	02	144444	01	1	12	15	12	1	2	222212
2137	72	CHEV	VEGA	50114	1	4	3	1	4	4	4	4	2	3	4	4	1	10	234444	02	4	24	25	22	1	2	222212
2138	72	CHEV	STAW	31491	1	4	2	3	2	4	4	4	3	2	4	4	2	15	423444	06	1	12	15	10	1	2	222212
2139	72	CHEV	CHEL	36893	2	3	2	3	2	4	4	4	2	3	4	4	2	01	144444	02	1	12	15	11	1	2	222212
2140	72	CHEV	CHEL	60840	1	4	3	1	4	4	3	4	2	3	4	4	1	01	441444	02	1	17	18	14	1	2	222212
2141	72	CHEV	STAW	43914	2	3	3	2	3	4	4	4	2	3	4	4	3	15	414444	06	1	12			1	2	222212
2142	72	CHEV	CAPR	31724	2	3	2	4	2	3	4	4	2	3	4	4	1	04	143444	01	1				1	2	222212
2143	72	DODG	CHAR	67924	1	4	3	2	3	4	4	4	4	2	4	3	1	03	324444	02	1	15	18	12	1	2	222212
2144	72	FORD	PINT	78681	2	2	3	2	3	4	4	4	1	4	4	4	1	10	144444	03	1	26	30	24	1	2	222212
2145	72	FORD	TORI	72923	2	2	3	1	4	4	4	4	4	4	1	4	2	20	144444	04	1	15	16	13	1	2	222212
2146	72	FORD	MAVE	71783	2	4	3	3	2	4	4	4	3	2	4	4	1	05	324444	04	3	21	22	20	2	1	222212
2147	72	FORD	STAW	45575	1	4	3	3	2	4	4	4	4	2	4	4	2	15	442444	05	2	15	14	11	1	2	222212
2148	72	FORD	LTD	49450	1	4	2	2	3	4	4	4	1	4	3	4	2	17	424444	10	2	16	17	10	1	2	222212
2149	72	MERC	MONR	74906	1	4	4	2	4	3	4	4	2	4	3	4	1	02	414444	04	1	17	19		1	2	222212
2150	72	OLDS	CUTL	54223	1	4	3	3	4	4	3	4	2	3	4	4	2	20	243444	05	1				1	2	222212
2151	72	PLYM	DUST	42635	2	3	4	2	4	4	3	4	2	3	4	4	1	04	134444	04	1	19	18	16	1	2	222212
2152	72	PLYM	FRY3	99388	2	4	6	2	4	4	3	4	3	4	1	4	3	10	442444	02	1		16		1	2	222212
2153	72	PONT	GRNV	33372	2	1	3	2	3	4	4	4	2	3	4	4	1	04	414444	03	1				1	2	222212
2154	72	PONT	FIRE	40006	2	2	3	3	2	4	4	4	2	3	4	3	3	13	244444	04	1	14	16	12	1	2	222212
2155	72	DATS	510	57807	1	4	3	3	2	4	4	4	2	3	4	4	3	20	234444	04	4	28	30	25	1	2	212222
2156	72	TOYO	CELI	93103	1	4	4	4	3	4	2	4	2	4	4	4	1	10	424444	03	1				1	2	222212
2157	72	VOLK	SEDA	59830	1	4	2	2	3	4	4	4	1	4	4	4	1	01	144444	02	4	21	22	20	1	2	222212
2158	72	VOLK	SEDA	74330	1	4	3	1	4	4	4	4	1	4	4	4	3	10	144444	02	1				1	2	222212
2385	72	BUIC	STAW	57443	1	4	3	4	2	3	4	4	4	1	4	4	3	15	433444	02	1	12	13	10	1	2	222212
2386	72	BUIC	LESA	78138	1	4	4	4	2	4	4	4	2	3	4	4	1	01	243444	02	1	13	15	12	1	2	222212
2387	72	CHEV	VEGA	79614	2	3	4	3	4	4	2	4	1	4	4	4	1	05	144444	02	1	25	24	22	1	2	222212
2388	72	CHEV	NOVA	25457	1	4	2	4	2	4	3	4	4	1	4	4	2	16	234444	02	1				1	2	222212
2389	72	CHEV	MALI	38896	2	4	1	3	2	4	4	4	4	1	4	4	1	05	144444	02	1				1	2	222212
2390	72	CHEV	IMPA	65500	1	4	3	1	4	4	4	4	2	3	4	4	2	03	244444	04	2	12	14	10	1	2	222212
2391	72	CHEV	IMPA	75655	2	2	3	3	2	4	4	4	1	3	4	4	1	06	144444	04	1	14	16	12	1	2	222212
2392	72	CHRY	NEWP	24622	1	4	2	3	2	4	4	4	4	2	3	4	3	18	144444	08	1	08	10	06	1	2	222212
2393	72	DODG	DEMO	44170	1	4	2	2	3	4	4	4	2	3	4	3	2	15	144444	02	1				1	2	222212
2394	72	FORD	PINT	57926	1	4	4	1	4	4	4	4	1	4	4	4	3	21	144444	02	4	18	21	15	1	2	222212
2395	72	FORD	TORI	63441	2	4	4	4	4	4	1	4	1	4	4	4	2	05	144444	02	1	12	15	10	1	2	222212
2396	72	FORD	MUST	61933	2	3	3	3	2	4	4	4	2	3	4	4	1	08	233444	06	3	12	14	11	1	2	222212
2397	72	FORD	GALA	73386	1	4	4	2	3	4	4	4	4	2	4	3	2	07	414444	01	1	12	13	10	1	2	222212
2398	72	LINC	MRK4	67544	2	1	3	4	1	4	4	4	1	4	4	4	1	03	144444	10	3	09	10	08	1	2	222221
2399	72	MERC	MONG	67035	2	2	3	4	2	4	4	4	4	1	4	4	1	10	144444	02	1				1	2	222212
2400	72	OLDS	CUTL	72999	1	4	3	1	4	4	3	4	2	3	4	4	2	10	442444	03	1	15	16	12	1	2	222212
2401	72	OLDS	STAW	75322	1	4	4	3	2	4	4	4	4	3	4	2	1	12	423444	04	1	10	13	07	1	2	222212
2402	72	PLYM	SATE	34488	1	4	2	4	1	4	4	4	1	4	4	4	1	08	414444	02	1	17	18	15	1	2	222212

APPENDIX H

LISTING OF TEST VEHICLE USE DATA

ST. LOUIS

VEH	YR	MAKE	MODL	ODOM	N	PUR	YMT	F	C	O	I	R	W	S	B	V	L	MI	VEHUSE	TR	F	OA	HD	CD	H	U	DAMAGE
2403	72	PONT	STAW	86402	1	4	3	2	3	4	4	4	2	4	4	3	2	06	424444	02	1				1	2	222212
2404	72	CAPR	COUP	65012	1	4	4	4	1	3	4	4	4	2	4	3	3	15	234444	06	1	24	28	22	1	2	222212
1159	71	BUIC	RIVE	52953	1	4	3	2	4	4	4	4	4	3	4	2	2	07	144444	02	1		17		1	2	222212
1160	71	BUIC	SKYL	84114	2	3	2	2	3	4	4	4	4	1	4	4	1	05	243444	02	2	14	16	14	1	2	222212
1161	71	CHEV	VEGA	53401	1	4	2	3	2	4	4	4	2	3	4	4	2	07	314444	02	2	32	30	22	1	2	222212
1162	71	CHEV	CHEL	92451	2	3	4	2	3	4	4	4	1	3	4	4	2	15	414444	04	1	16	18	14	1	2	222212
1163	71	CHEV	NOVA	32300	1	4	2	3	2	4	4	4	2	3	4	4	1	02	144444	02	1				1	2	222212
1164	71	CHEV	IMPA	62958	1	4	3	2	3	4	4	4	2	3	4	4	3	07	244444	03	1				1	2	222212
1165	71	CHEV	IMPA	96161	1	4	3	4	1	4	4	4	4	1	4	4	2	60	441444	03	1	12			1	2	222212
1166	71	CHRY	NEWP	107412	2	2	3	4	1	4	4	4	4	1	4	4	3	25	144444	01	1				1	2	222212
1167	71	DODG	CHAR	120246	1	4	5	2	3	4	4	4	2	3	4	4	2	05	432444	02	1	14	17	12	1	2	222212
1168	71	FORD	PINT	28151	1	4	2	1	4	4	4	4	1	4	4	4	2	28	144444	01	4	25	26	22	1	2	222212
1169	71	FORD	TORI	86898	1	4	4	2	3	4	4	4	3	2	4	4	2	25	144444	04	1	16	18	14	1	2	222212
1170	71	FORD	MAVE	51202	2	4	3	4	1	4	4	4	2	3	4	4	3	15	144444	04	1	16	18	15	1	2	222212
1171	71	FORD	GALA	77748	1	4	3	2	3	4	4	4	2	3	4	4	1	02	324444	02	1	15	17	12	1	2	222212
1172	71	FORD	STAW	80292	1	4	4	4	4	4	2	4	4	4	4	1	2	28	442444	02	1			08	1	2	222212
1173	71	MERC	COUG	40017	1	4	2	4	2	4	4	4	2	3	4	4	2	03	442444	02	1	15	16	13	1	2	222212
1174	71	OLDS	CUTL	47678	2	4	2	2	3	4	4	4	4	2	4	3	1	02	244434	02	1	14	16	12	1	2	222212
1175	71	PLYM	DUST	67654	1	4	3	1	4	4	4	4	1	4	4	4	1	15	144444	04	1	18			1	2	222212
1176	71	PONT	CATA	79094	2	3	3	2	3	4	4	4	2	3	4	4	2	08	234444	06	1	12	15	10	1	2	222212
1177	71	PONT	LEMA	67724	2	4	4	2	3	4	4	4	3	3	4	4	3	10	144444	08	2	14	17	12	1	2	222212
1178	71	DATS	B110	58241	2	2	2	3	2	4	4	4	2	3	4	4	2	05	144444	04	3	18			1	2	222221
1179	71	TOYO	CORO	47167	1	4	2	2	3	4	4	4	2	3	4	4	3	12	244444	04	1	19	21	17	1	2	222212
1180	71	VOLK	SEDA	77254	2	2	3	2	3	4	4	4	2	4	4	3	1	09	144444	02	1	26	20	24	2	2	222212
1405	71	AMC	MATA	61811	1	4	2	4	4	4	1	4	4	4	4	1	2	05	441444	06	2	16	18	15	1	2	222212
1406	71	BUIC	ELEC	48881	1	4	2	2	3	4	4	4	2	3	4	4	1	06	414444	03	1	14	16	11	1	2	222212
1407	71	CADI	DEVI	58409	2	3	2	3	2	4	4	4	2	4	4	3	1	05	234444	02	1	13	16	11	1	2	222212
1408	71	CHEV	MONT	59810	2	4	3	2	3	4	4	4	2	4	4	3	2	07	234444	04	1	13	15	10	1	2	222212
1409	71	CHEV	CHEL	38817	2	3	3	3	2	4	4	4	3	2	4	4	2	10	414444	04	1	14	17	11	1	2	222212
1410	71	CHEV	CHEL	61710	1	4	3	1	4	4	4	4	1	4	4	4	1	04	414444	04	1				1	2	222212
1411	71	CHEV	IMPA	58136	2	3	3	3	1	4	4	4	4	1	4	4	1	03	441444	03	1	14	16	12	1	2	222212
1412	71	DODG	DART	79532	2	4	3	2	3	3	4	4	4	2	4	3	3	46	441444	04	1	20	23	17	1	2	222212
1413	71	FORD	MUST	46646	2	4	2	2	3	4	4	4	2	3	4	4	2	15	144444	02	1	17	18	16	1	2	222212
1414	71	FORD	TORI	83354	2	4	3	2	4	4	3	4	2	4	4	4	1	20	144444	03	1	14	15	12	1	2	222212
1415	71	FORD	LTD	60576	2	4	4	2	3	4	4	4	2	4	4	4	2	10	144444	02	1		17	12	1	2	212222
1416	71	MERC	MONR	54320	1	4	2	4	2	4	4	4	4	1	4	4	1	03	134444	01	1	13	14	10	1	2	222212
1417	71	OLDS	CUTL	93427	2	4	3	4	1	4	4	4	1	3	4	4	1	03	134444	02	1	10	18	13	1	2	222212
1418	71	OLDS	CUTL	42210	2	2	3	3	2	3	4	4	4	3	2	4	1	12	234444	06	1	14	17	18	1	2	222212
1419	71	PLYM	DUST	108460	2	4	5	3	3	4	2	4	2	3	3	4	2	08	324444	10	1	15	18	12	1	2	222212
1420	71	PLYM	STAW	64383	1	4	3	4	2	4	3	4	4	1	4	4	2	25	442444	04	1	14	16	12	1	2	222212
1421	71	PONT	CATA	66118	1	4	3	2	3	4	4	4	2	3	4	4	1	10	324444	02	1	12	14	10	1	2	222212
1422	71	VOLK	SEDA	52848	2	4	2	3	2	4	4	4	2	3	4	4	2	10	144444	02	1				1	2	222212
0181	70	AMC	JAVE	94087	1	4	2	4	4	3	2	4	1	3	4	4	2	10	144444	02	1				1	2	222212
0182	70	BUIC	LESA	78111	1	4	3	1	4	4	4	4	1	4	4	4	2	12	144444	01	1				1	2	222212
0183	70	CHEV	NOVA	99110	1	4	3	2	4	4	4	3	2	4	4	4	2	20	144444	03	1				1	2	222122
0184	70	CHEV	CHEL	61644	1	4	3	3	4	2	4	4	2	3	4	4	2	09	144444	04	1	16	20	15	1	2	222212
0185	70	CHEV	CHEL	100814	1	4	3	2	3	4	4	4	4	1	4	4	2	05	441444	03	1		09		1	2	222212
0186	70	CHEV	IMPA	41692	1	4	2	4	1	4	4	4	4	1	4	4	3	20	144444	04	1				1	2	222212
0187	70	CHEV	IMPA	46341	2	3	2	2	4	4	3	4	3	4	4	3	1	02	243444	04	2	12	14	10	1	2	222212
0188	70	DODG	CORO	33940	1	4	1	4	1	4	4	4	4	1	4	4	3	07	414444	02	3				1	2	222212

APPENDIX B

LISTING OF TEST VEHICLE USE DATA

ST. LOUIS

VEH	YR	MAKF	MODL	ODOM	N	PUR	YMT	F	C	O	I	R	W	S	B	V	L	MI	VEHUSE	TR	F	DA	HD	CD	H	U	DAMAGE
0189	70	FORD	MUST	54273	2	4	2	4	1	4	4	4	1	4	4	4	2	10	414444	01	1				1	2	222212
0190	70	FORD	STAW	80675	1	4	3	3	3	4	4	4	2	4	4	3	1	03	324444	04	1	15	17	13	1	2	222212
0191	70	FORD	LTD	21704	1	4	1	2	4	4	3	4	2	3	4	4	1	15	144444	03	1				1	2	222212
0192	70	FORD	LTD	62275	1	4	3	3	2	4	4	4	1	4	4	4	1	02	244444	02	1	14	12	16	1	2	122222
0193	70	MERC	MARQ	32958	2	4	1	1	4	4	4	4	4	1	4	4	3	14	414444	04	1	15			1	2	222212
0194	70	OLDS	STAW	95980	1	4	3	3	2	4	4	4	4	2	3	4	3	10	342444	02	1	14	16	12	1	2	222212
0195	70	PLYM	STAW	65521	1	4	2	4	2	3	4	4	4	2	4	3	1	06	243444	01	1	15	14	12	1	2	222212
0196	70	PLYM	DUST	63153	1	4	3	3	3	4	4	4	2	3	4	4	3	05	144444	02	4	12	16	14	1	2	222212
0197	70	PONT	LEMA	74417	2	3	3	4	1	4	4	4	2	3	4	4	3	30	234444	04	1	15	16	14	1	2	222212
0198	70	DATS	510	88524	2	3	4	2	3	4	4	4	1	4	4	4	3	10	244444	02	1	22	25	20	2	2	222212
0200	70	VOLK	SEDA	84588	2	3	3	3	4	4	2	4	1	4	4	4	3	10	144444	03	1	25		25	1	2	222212
0423	70	BUIC	SKYL	65009	2	2	3	3	2	4	4	4	4	4	2	3	1	15	144444	05	3	16	18	14	1	2	222212
0424	70	BUIC	SKYL	79928	1	4	3	2	3	4	4	4	2	3	4	4	3	05	424444	02	3				1	2	222212
0425	70	CADI	DEVI	73962	2	4	2	4	2	4	4	4	4	2	4	4	3	12	442444	03	1	09			1	2	222212
0426	70	CHEV	CAMA	38110	1	4	2	1	4	4	4	4	2	3	4	4	2	15	144444	03	2				1	2	222212
0427	70	CHEV	STAW	71541	1	4	3	3	2	3	4	4	4	1	4	3	1	05	333444	02	1	14	15	14	1	2	222212
0428	70	CHEV	IMPA	50025	1	4	2	2	3	4	4	4	2	3	4	4	1	12	414444	02	1	10	15	11	1	2	222212
0429	70	CHRY	STAW	50785	2	4	2	3	2	4	4	4	4	2	4	3	3	14	144444	02	1				1	2	222212
0430	70	DODG	CHAR	72146	2	3	2	3	2	4	4	4	2	3	4	4	3	25	144444	02	1				1	2	222221
0431	70	FORD	MAVE	71919	2	4	3	2	3	4	4	4	1	4	4	4	2	08	144444	02	1	18	20	16	1	2	222212
0432	70	FORD	GALA	56375	2	4	2	4	4	3	4	2	4	1	4	3	3	12	414444	04	1				1	2	222212
0433	70	FORD	LTD	95011	1	4	2	1	3	4	4	4	1	4	4	4	3	34	342444	02	1	14	15	12	1	2	222212
0434	70	OLDS	DELT	38399	2	4	2	1	4	3	4	4	2	3	4	4	2	15	144444	02	1	14	16	12	1	2	222212
0435	70	PLYM	SATE	72630	2	4	3	2	3	4	4	4	1	4	4	4	2	15	144444	02	1		19	15	1	2	222212
0436	70	PONT	GRNP	68221	1	4	2	2	3	4	4	4	4	3	4	2	1	02	414444	04	1	15	17	13	1	2	222212
0437	70	VOLK	SEDA	42056	2	2	2	3	3	4	4	4	2	3	4	4	1	04	424444	04	1	31	33	27	1	2	222212
9438	69	AMC	RAMB	82942	2	3	2	4	1	4	4	4	4	1	4	4	3	15	144444	01	1	10			1	2	222212
9439	69	BUIC	WILD	46465	2	4	2	4	1	4	4	4	1	4	4	4	2	10	414444	03	1				1	2	222212
9440	69	BUIC	SPEC	74181	2	4	2	2	3	4	4	4	2	3	4	4	3	09	442444	02	1			15	1	2	222212
9441	69	CADI	DEVI	86541	2	2	3	3	2	4	4	4	4	2	4	4	2	12	342444	03	1	10	12	07	1	2	222212
9442	69	CHEV	NOVA	34739	1	4	1	2	3	4	4	4	3	2	4	4	1	13	144444	03	1	14	16	13	1	2	222212
9443	69	CHEV	IMPA	68294	2	3	2	4	1	4	4	4	1	4	4	4	1	06	144444	03	2	12			1	2	222212
9444	69	CHEV	CAMA	97743	2	1	4	2	3	4	4	4	2	3	4	4	3	20	424444	02	1	17	19	14	2	2	222212
9445	69	CHEV	IMPA	99809	2	3	3	2	3	4	4	4	4	3	2	4	3	05	423444	10	1	14	17	12	1	2	222212
9446	69	CHEV	ELCA	80637	1	4	3	3	1	4	4	4	1	4	4	4	2	30	441444	02	1				1	2	222212
9447	69	CHEV	NOVA	111766	1	4	3	2	3	4	4	4	2	3	4	4	2	08	424444	04	2				1	2	222212
9448	69	CHEV	BELA	84369	2	2	3	2	3	4	4	4	1	4	4	4	3	30	244444	03	1		15		1	2	222212
9449	69	CHRY	NEWP	15683	1	4	3	4	2	3	4	4	2	3	4	3	2	15	424444	03	1	13	15	10	1	2	222212
9450	69	DODG	POLA	96452	2	4	3	3	2	4	4	4	1	4	4	4	2	12	144444	02	1	15	18	13	1	2	222212
9451	69	FORD	LTD	126847	1	4	4	4	1	4	4	4	2	3	4	4	3	25	414444	02	1	15			1	2	222212
9452	69	FORD	FALC	68828	2	1	2	4	2	4	3	4	4	1	4	4	2	35	424444	02	1				1	2	222212
9453	69	FORD	GALA	60470	2	3	3	2	3	4	4	4	2	4	3	4	3	15	234444	06	1	13	15	11	1	2	222212
9454	69	FORD	LTD	77014	2	3	3	2	3	4	4	4	2	3	4	4	3	18	234444	04	1	13	15	11	2	2	222221
9455	69	FORD	FAIR	106012	2	4	2	2	3	4	4	4	1	4	4	3	2	06	144444	02	4				1	2	222212
9456	69	FORD	THUN	62393	2	4	3	2	4	4	3	4	2	3	4	4	1	05	414444	02	1	14	15	09	1	2	222212
9457	69	MERC	MONG	125882	2	4	3	1	4	4	4	4	4	3	2	4	1	04	414444	10	2	14			1	2	222212
9458	69	OLDS	98	110883	2	4	3	3	2	4	3	4	2	4	4	3	1	10	244443	03	3	14	15	12	1	2	222212
9459	69	OLDS	CUTL	109627	2	2	3	2	4	4	4	4	2	3	4	4	2	12	424444	03	1				1	2	222212
9460	69	PLYM	SATE	84651	2	3	4	2	3	4	4	4	1	4	4	4	3	20	144444	04	1	20			1	2	222212
9461	69	PLYM	VALI	95385	1	4	2	4	1	3	4	4	2	3	4	4	3	16	234444	10	2	20	22	16	1	2	222212

APPENDIX B

LISTING OF TEST VEHICLE USE DATA

ST. LOUIS

VEH	YR	MAKE	MODL	ODOM	N	PUR	YMT	F	C	O	I	R	W	S	B	V	L	MI	VEHUSE	TR	F	OA	HD	CD	H	U	DAMAGE
9462	69	PONT	LEMA	46986	2	4	2	2	3	4	4	4	2	3	4	4	2	07	234444	05	3	13	20	15	1	2	222212
9463	69	PONT	CATA	95997	1	4	3	2	3	4	4	4	2	3	4	4	3	04	244444	03	1				1	2	222212
9464	69	PONT	STAW	86879	2	4	3	4	1	4	4	4	2	3	4	4	2	10	441444	05	1				1	2	222212
9465	69	TOYO	CORO	61586	1	4	2	1	4	4	4	4	1	4	4	4	3	06	144444	02	1	24	29	22	1	1	222212
9466	69	VOLK	SEDA	62417	1	4	2	3	2	4	4	4	4	1	4	4	3	04	442444	02	4			25	1	2	222212
9467	69	VOLK	SEDA	67722	2	4	2	4	1	4	4	4	1	4	4	4	1	15	441444	03	1	26	25	22	1	2	222212
8468	66	AMC	STAW	49984	2	3	3	3	1	4	4	4	2	4	4	3	2	15	144444	02	1	20	21	19	1	2	222212
8469	68	AMC	RAMB	31318	2	2	1	2	3	4	4	4	2	3	4	4	1	06	324444	03	1	17	19	13	1	2	222212
8470	67	AMC	REBE	74706	1	4	3	4	2	4	4	4	4	1	4	4	2	20	442444	02	1			10	1	2	222212
8471	68	BUIC	WILD	98236	2	2	3	1	4	4	4	4	4	1	4	4	1	05	144444	04	1	11			1	2	222212
8472	68	BUIC	ELEC	81605	2	4	3	2	3	4	4	4	2	3	4	4	3	30	324444	06	1	12	15	10	1	2	222212
8473	68	BUIC	LESA	59591	2	4	4	1	4	4	4	4	2	3	4	4	3	30	144444	02	1	16	23	12	1	2	222212
8474	66	CADI	DEVI	85355	2	3	3	2	3	4	4	4	2	4	4	3	1	01	314444	04	1	10	12	08	1	2	222212
8475	68	CHEV	CHEL	83503	2	3	2	4	2	3	4	4	2	3	4	4	1	01	424444	04	1	17	21	13	1	2	222212
8476	67	CHEV	CHEL	66775	2	3	1	3	2	4	4	4	4	1	4	4	3	20	342444	02	1	13	15	12	1	2	222212
8477	67	CHEV	IMPA	52876	2	4	2	3	2	4	4	4	2	3	4	4	1	04	423444	02	1	16	18	14	1	2	222212
8478	68	CHEV	IMPA	82507	2	4	3	2	3	4	4	4	4	1	4	4	2	10	441444	05	1	17	18	16	1	2	222212
8479	66	CHEV	IMPA	108439	2	1	2	4	1	4	4	4	1	4	4	4	1	04	424444	05	1				1	2	222212
8480	68	CHEV	IMPA	91469	2	3	2	3	3	3	3	3	2	4	4	4	2	15	144444	08	1	15	17	12	1	2	222212
8481	66	CHEV	CHEL	108001	1	4	4	1	4	4	4	4	1	4	4	4	1	10	424444	03	1				1	2	222212
8482	67	CHEV	CAMA	106229	1	4	3	2	3	4	4	4	2	3	4	4	2	20	441444	01	1	16	18	13	1	2	222212
8483	68	CHEV	CHEL	97578	2	3	3	4	2	3	4	4	2	4	4	4	1	05	414444	03	1		17		1	2	222212
8484	68	CHEV	CHEL	108062	2	3	3	1	4	4	4	4	1	4	4	4	1	02	144444	02	1				1	2	222212
8485	68	CHEV	IMPA	62196	1	4	2	3	4	4	1	4	1	3	4	4	2	33	441444	04	1	14	16	13	1	2	222212
8486	68	CHEV	IMPA	110500	1	4	2	4	2	4	3	4	1	4	4	4	1	10	234444	02	4				1	2	222212
8487	68	CHRY	NEWP	67049	1	4	2	2	3	4	4	4	2	3	4	4	1	17	234444	02	1		16	10	1	2	222212
8488	67	DODG	DART	90157	1	4	3	3	2	4	4	4	4	2	4	4	3	10	233444	06	1	13	15	12	1	2	222212
8489	68	DODG	CORO	124600	1	4	4	4	2	3	4	4	4	2	4	3	2	25	414444	02	1	15	19	12	1	2	222212
8490	68	DODG	MONA	101294	2	4	3	2	3	4	4	4	2	3	4	4	1	03	324444	04	1				1	2	222212
8491	67	FORD	MUST	46321	2	4	3	1	4	4	4	4	2	3	4	4	1	20	144444	03	1				1	2	222212
8492	67	FORD	FAIR	82920	2	4	3	4	2	4	4	4	3	2	4	4	2	30	442444	02	1				1	2	222212
8493	66	FORD	FAIR	64786	2	2	2	3	1	4	4	4	2	3	4	4	3	30	144444	02	1				1	2	222212
8494	68	FORD	GALA	107625	1	4	3	2	3	4	4	4	2	3	4	4	2	05	424444	02	1				1	2	222212
8495	68	FORD	TORI	102268	2	4	4	2	3	4	4	4	2	3	4	4	3	10	234444	02	1				1	2	222212
8496	68	FORD	GALA	54239	2	4	2	4	2	3	4	4	1	3	4	4	2	05	144444	02	1	14	16	14	1	2	222212
8497	67	FORD	MUST	93217	2	2	1	2	3	4	4	4	4	3	4	2	3	10	324444	04	1				1	2	222212
8498	67	FORD	GALA	94411	1	4	3	1	3	4	4	4	1	2	4	4	2	11	144444	03	1	12	17	12	1	2	222212
8499	67	FORD	MUST	41715	1	4	2	3	2	4	4	4	4	2	4	4	3	15	234444	02	3	15	17	12	1	2	222212
8500	66	FORD	GALA	83913	2	4	3	4	3	4	2	4	2	4	4	4	1	15	144444	05	1	16	15	12	1	2	222212
8501	68	FORD	STAW	70631	1	4	2	4	4	4	1	4	1	4	4	4	3	13	414444	01	1	10			1	2	222212
8502	67	LINC	CONT	85469	2	4	3	4	2	3	4	4	4	1	4	4	2	20	423444	01	1				1	2	222212
8503	67	MERC	COUG	63692	2	4	2	4	1	4	4	4	1	4	4	4	1	20	414444	01	2				1	2	222212
8504	67	OLDS	CUTL	81688	2	4	3	2	3	4	4	4	2	3	4	4	2	10	144444	04	1		08		1	2	222212
8505	67	OLDS	98	103683	2	4	4	2	3	4	4	4	1	4	4	4	2	10	234444	04	1				1	2	222212
8506	68	OLDS	CUTL	80822	2	2	3	1	4	4	4	4	2	3	4	4	2	20	144444	09	2	15	17	13	1	2	222212
8507	68	PLYM	FRY3	64820	1	4	2	4	2	3	4	4	4	1	4	4	1	04	144444	01	1	13	14	12	1	2	222212
8508	68	PLYM	FRY3	75835	1	4	3	4	2	3	4	4	2	3	4	4	2	40	144444	02	1	15	16	13	1	2	222212
8509	68	PLYM	SATE	114393	1	4	3	4	1	4	4	4	2	3	4	4	1	08	144444	02	1	16	17	15	1	1	222212
8510	66	PLYM	FRY3	73480	1	4	2	3	2	4	4	4	2	3	4	4	1	08	234444	02	1				1	2	222212
8511	68	PONT	BONN	76372	2	4	3	3	2	4	4	4	2	3	4	4	1	06	342444	04	2	16	18	15	1	2	222212

APPENDIX B

LISTING OF TEST VEHICLE USE DATA

ST. LOUIS

VEH	YR	MAKE	MODL	ODOM	N	PUR	YMT	F	C	O	I	R	W	S	B	V	L	MI	VEHUSE	TR	F	OA	HD	CD	H	U	DAMAGE
8512	66	PONT	CATA	116167	2	4	2	3	2	4	4	4	2	4	4	3	2	08	324444	09	1	14	15	12	1	2	222221
8513	68	PONT	TEMP	122327	2	1	1	4	1	4	4	4	2	3	4	4	2	05	134444	04	3	16	18	14	1	2	222221
8514	67	PONT	STAW	112439	2	4	2	2	3	4	4	4	4	1	4	4	1	05	342444	02	1	16	15	11	1	2	222212
8515	68	PONT	STAW	78318	2	3	2	3	2	4	4	4	2	3	4	4	3	25	144444	02	1	15	14	12	1	2	222212
8516	67	VOLK	SEDA	79471	2	4	3	3	2	4	4	4	2	3	4	4	1	05	442444	03	1				1	2	222212
8517	66	VOLK	SEDA	130750	2	1	3	4	1	4	4	4	2	3	4	4	1	04	243444	02	4				1	2	222212

APPENDIX B

LISTING OF TEST VEHICLE USE DATA

WASHINGTON D.C.

VEH	YR	MAKE	MODL	ODOM	N	PUR	YMT	F	C	O	I	R	W	S	B	V	L	MI	VEHUSE	TR	F	OA	HD	CD	H	U	DAMAGE
7001	76	CHEV	G10	2644	1	1	3	4	1	3	4	4	1	4	4	3	3	25	243434	06	4	12	14	11	1	2	222212
7002	76	CHEV	G10	3438	1	1	3	3	2	3	4	4	2	3	4	4	3	20	314444	06	1			13	1	2	222212
7003	76	CHEV	G10	8196	1	2	3	4	2	2	4	4	3	3	3	3	3	15	233444	08	1	12	13	12	2	2	222212
7004	76	CHEV	G10	7447	1	2	3	3	3	3	3	4	3	3	4	3	1	10	134434	02	1	14	15	12	4	2	222212
7005	76	DODG	B100	1508	1	1	5	1	4	4	3	4	2	4	3	4	1	15	233444	15	3		15	12	1	2	222212
7006	76	DODG	B100	9757	1	2	5	3	3	3	3	4	4	4	1	4	1	00	144444	20	4	10			1	2	222212
7007	76	FORD	E100	2073	1	1	3	2	3	4	2	3	2	3	4	3	3	15	243444	06	1	14	18	10	1	2	222212
7008	76	FORD	E100	11186	1	2	4	3	4	3	2	4	2	3	4	3	2	07	234444	04	1	11	13	10	1	2	222212
7009	76	FORD	F100	6475	1	2	3	3	3	3	3	4	2	3	4	3	3	30	232444	04	3	15	15		1	2	222212
7010	76	DATS	620	2382	1	1	4	1	3	4	3	3	1	3	4	4	2	10	144444	04	4	21			1	2	222212
7011	75	CHEV	C10	6057	1	3	2	3	4	3	3	3	3	2	4	2	3	14	233334	02	1	13	15	12	1	2	222212
7012	75	CHEV	C10	19928	1	2	4	4	3	3	2	3	2	2	3	3	3	26	234434	12	2	14	14	13	4	2	222212
7013	75	CHEV	G10V	6548	1	2	2	4	2	3	3	2	1	3	4	3	2	07	234444	02	1	12	14	10	3	2	222212
7014	75	DODG	B100	21534	1	3	5	2	2	4	4	4	2	4	4	3	3	15	144444	04	3				1	2	222212
7015	75	FORD	F100	17582	1	3	3	3	2	3	4	4	1	3	4	4	1	05	134444	04	4				1	2	222212
7016	75	FORD	F100	12187	1	2	3	4	4	4	2	2	2	2	4	4	3	10	324443	04	1	14	17	12	2	2	222212
7017	75	FORD	F100	21324	1	3	4	3	3	4	2	3	2	4	4	3	3	14	234443	04	1	12	13		1	2	222212
6018	76	AMC	PACE	4344	1	1	3	2	3	4	4	4	1	3	4	3	1	10	134444	03	1				1	2	212222
6019	76	BUIC	REGA	9568	1	2	3	3	3	3	2	2	3	2	4	2	2	08	432444	06	3	16	18		3	2	222212
6020	76	BUIC	ELEC	12641	1	2	5	4	3	3	2	4	4	4	3	1	2	05	233444	06	1	15	15	10	4	2	222212
6021	76	CADI	DEVI	4948	1	2	2	3	2	3	3	3	3	2	3	3	3	15	323444	02	1		15	11	1	2	222212
6022	76	CHEV	MONT	923	1	1	3	3	2	3	3	4	2	3	3	3	3	10	233444	04	1				3	2	222212
6023	76	CHEV	MALI	5234	1	2	3	4	4	1	4	4	1	3	4	4	1	05	314444	02	1				1	2	222212
6024	76	CHEV	MONZ	2312	1	2	3	4	1	4	4	4	3	2	4	4	3	35	441444	02	3			17	3	2	222212
6025	76	CHEV	MALI	15549	1	2	5	3	3	3	4	4	3	3	3	4	3	10	233334	04	1				1	2	222212
6026	76	CHEV	MONT	1374	1	1	2	2	3	3	4	4	2	3	4	4	3	10	243444	02	1				3	2	222212
6027	76	CHEV	CAMA	6103	1	2	5	2	3	3	4	4	1	4	3	4	2	20	133444	02	4	25	29	21	4	2	222212
6028	76	CHEV	CHET	4105	1	2	2	3	2	3	4	4	2	3	4	3	2	07	233444	04	1		35	28	3	2	222212
6029	76	DODG	ASPE	1199	1	1	3	3	3	3	4	4	2	3	4	4	3	20	243444	06	2				1	2	222212
6030	76	DODG	ASPE	1212	1	1	3	4	4	3	3	2	2	3	4	3	2	30	234444	02	1	17			1	2	222212
6031	76	FORD	PINT	3317	1	1	3	4	3	2	4	4	2	2	4	4	3	10	144444	06	1	22		22	1	2	222212
6032	76	FORD	LTD	2856	1	2	3	3	3	3	3	3	3	3	3	3	1	03	333334	04	1				1	2	222212
6033	76	FORD	TORI	5570	1	2	3	3	2	3	3	4	3	3	2	3	3	25	332444	06	1	14	18	12	1	2	222212
6034	76	FORD	GRAN	2791	1	1	3	3	2	2	4	4	3	3	4	3	3	25	233444	02	2				2	2	222212
6035	76	FORD	GRAN	1714	1	1	3	3	3	3	3	3	3	3	3	3	3	05	233444	04	1				1	2	222212
6036	76	FORD	GRAN	3744	1	1	3	3	3	3	3	3	3	3	3	3	3	33	333334	04	1				1	2	222212
6037	76	MERC	MARQ	2421	1	1	5	2	2	3	4	4	2	3	4	3	2	10	233444	12	1				3	2	222212
6038	76	MERC	COME	3400	1	2	3	3	3	3	3	4	3	3	3	3	3	33	333334	04	1				5	2	222212
6039	76	OLDS	CUTL	5545	1	2	3	4	3	3	3	3	2	3	3	3	2	30	233444	04	3	17			1	2	222212
6040	76	OLDS	CUTL	13067	1	2	5	3	3	3	3	4	3	3	2	3	3	10	144444	12	1	12	16	10	3	2	222212
6041	76	OLDS	DELT	669	1	1	1	4	3	3	2	4	4	3	4	2	2	15	144444	02	1				1	2	222212
6042	76	PLYM	VOLA	9549	1	2	5	4	4	4	2	3	3	3	4	3	3	35	233444	03	1	16	22		4	2	222212
6043	76	PLYM	FURY	3697	1	1	4	2	3	3	4	4	3	4	2	3	3	25	134444	04	1	16		14	1	2	222212
6044	76	PONT	GRNP	6948	1	2	4	2	3	3	3	3	4	3	4	2	3	20	323444	04	2	17	21	17	1	2	222212
6045	76	PONT	CATA	6049	1	2	2	3	3	3	4	4	3	3	4	4	2	20	233444	02	1				1	2	222212
6046	76	DATS	B210	5061	1	2	3	2	3	3	4	4	1	3	4	4	3	20	324444	04	1		30	21	1	2	222212
6047	76	DATS	710	3613	1	2	3	3	2	4	4	4	4	2	4	3	3	13	332444	02	1				1	2	222212
6048	76	TOYO	CORO	2857	1	2	5	4	4	3	2	2	3	2	4	2	2	50	334444	06	3	28	32	25	1	2	222212
6049	76	TOYO	CORO	2161	1	1	3	3	3	3	3	4	4	2	3	3	2	09	323434	02	4	22	28	14	1	2	222212
6050	76	VOLK	RABB	1286	1	1	3	3	2	3	4	4	2	3	4	3	1	05	234444	04	3	25			1	2	222212

APPENDIX B

LISTING OF TEST VEHICLE USE DATA

WASHINGTON D.C.

VEH	YR	MAKE	MODL	ODOM	N	PUR	YMT	F	C	O	I	R	W	S	B	V	L	MI	VEHUSE	TR	F	OA	HD	CD	H	U	DAMAGE
6051	76	VOLK	RABB	7358	1	2	3	3	2	4	4	3	2	3	4	4	3	05	234444	03	2	28	28	23	3	2	222212
5052	75	AMC	PACE	8166	1	2	3	3	2	3	3	4	3	4	2	4	2	12	144444	06	1	18	20	16	1	2	122222
5053	75	BUIC	LESA	17667	1	3	4	2	3	3	4	4	4	2	4	3	1	08	234344	06	1		15		1	2	222212
5054	75	BUIC	ELEC	17151	1	3	4	2	3	3	3	4	3	4	3	2	3	10	224444	05	1				1	2	222212
5055	75	CADI	DEVI	26689	1	3	4	2	3	4	4	4	4	2	3	2	3	35	233344	04	3	11	14	10	4	2	222212
5056	75	CHEV	VEGA	28733	1	3	5	1	4	4	3	3	2	3	4	2	3	30	414444	02	3	25			4	2	122222
5057	75	CHEV	MONT	20100	1	3	4	2	3	4	2	4	3	3	3	3	2	10	144444	02	3		18		1	3	222212
5058	75	CHEV	IMPA	20596	1	3	4	3	3	4	3	3	4	3	4	2	1	10	134444	02	1		17	11	4	2	222212
5059	75	CHEV	CAPR	24456	1	3	5	3	3	3	3	4	3	2	3	3	2	10	442444	08	1	12	16	10	1	2	222212
5060	75	CHEV	CAMA	29060	1	3	4	3	4	4	2	3	2	3	3	4	3	20	144444	03	1	16	16		1	2	222212
5061	75	CHRY	NEWY	8379	1	2	2	1	3	3	3	4	1	3	4	3	3	27	134444	04	4				4	2	222212
5062	75	DODG	DART	19791	1	2	3	3	3	3	4	4	4	3	4	2	2	10	441444	04	3	20	22	10	1	2	222212
5063	75	FORD	MUST	27931	1	3	3	2	3	3	4	4	2	2	4	3	3	15	134444	04	1	20	20	18	1	2	222212
5064	75	FORD	LTD	29242	1	3	5	2	3	3	4	4	2	3	4	3	2	08	243444	05	4				1	2	222212
5065	75	FORD	TORI	3006	1	1	4	4	4	4	3	2	3	3	3	3	3	25	233443	15	1	10	14		3	2	222212
5066	75	FORD	MAVE	18814	1	2	4	3	3	3	3	3	3	3	3	3	1	05	233334	06	1				5	2	222212
5067	75	FORD	GRAN	18719	1	3	3	3	3	3	3	4	3	3	3	4	1	05	233444	04	1				1	3	222212
5068	75	MERC	MARQ	29362	1	3	4	4	3	3	2	4	3	3	4	2	1	05	243444	03	2	12	15	10	1	2	222212
5069	75	OLDS	DELT	9252	1	3	2	4	2	3	4	4	4	4	1	4	3	40	233444	06	1	17	15	14	1	2	222212
5070	75	OLDS	CUST	25649	1	3	3	3	3	2	3	4	3	3	2	3	3	10	233444	05	3	11	14	10	1	2	222212
5071	75	PLYM	FURY	31520	1	3	5	3	4	3	2	3	2	3	4	3	3	68	144444	02	4	14	16	13	4	2	222212
5072	75	PLYM	FURY	7125	1	3	2	3	3	2	3	4	4	2	4	2	2	10	223434	02	2	12	14	10	4	2	222212
5073	75	PONT	CATA	21157	1	2	5	3	3	2	3	4	3	2	4	3	1	23	233434	04	3	14	16	13	1	2	222212
5074	75	PONT	FIRE	23658	1	3	4	3	2	3	4	4	2	3	4	3	3	20	233444	04	1	14	18	10	4	2	222212
5075	75	DATS	B210	17229	1	2	4	2	3	3	3	4	3	2	4	3	1	25	432444	02	3	27	35	25	1	2	222212
5076	75	TOYO	CORO	7584	1	2	3	2	2	2	3	4	2	3	3	3	3	15	133444	04	2		26	24	1	2	222212
5077	75	TOYO	CORO	29649	1	2	5	4	4	3	3	3	4	4	1	4	2	50	144444	06	1	25	25	25	1	1	222212
5078	75	VOLK	RABB	818	1	1	3	3	3	3	3	4	2	3	4	4	3	30	423444	04	3				1	1	222212
5079	75	VOLK	RABB	16673	2	2	4	4	4	3	2	3	2	3	3	2	3	45	313444	02	4			26	3	2	222212
4080	74	AMC	MATA	22299	1	4	3	4	4	1	4	4	4	1	4	3	3	45	134444	04	2		17	12	1	2	222212
4081	74	BUIC	REGA	49289	1	4	5	2	3	3	3	4	3	3	2	4	3	40	234444	08	1	14	17	12	1	2	222212
4082	74	CADI	DEVI	23484	1	3	3	1	3	3	4	4	4	3	4	1	2	10	134444	04	1				1	2	222212
4083	74	CHEV	VEGA	23903	1	4	3	3	3	3	2	3	4	3	4	2	3	10	323434	02	1	18	22	15	1	2	222212
4084	74	CHEV	MALI	17375	1	3	2	4	2	3	4	4	2	3	4	3	3	45	234444	02	1	13	15	12	1	2	222212
4085	74	CHEV	NOVA	23147	1	3	3	2	3	4	3	4	2	4	4	4	2	05	134444	02	1	16			1	2	222212
4086	74	CHEV	CAMA	27255	1	4	3	3	3	2	4	4	2	4	4	2	2	05	234444	08	1			12	2	2	222212
4087	74	CHEV	NOVA	12901	1	3	2	3	3	2	4	4	2	3	4	3	2	10	323444	04	1	13	15	10	1	2	222212
4088	74	CHEV	MALI	41831	2	1	4	2	3	4	4	4	3	2	4	3	3	15	332444	02	1	13	15	10	1	2	222212
4089	74	CHRY	NEWP	13733	1	3	3	3	3	3	3	2	2	3	4	3	2	40	313444	10	2				1	2	222212
4090	74	DODG	DART	40758	1	4	4	2	3	3	4	4	2	3	2	3	2	12	134444	04	4	17	23	15	1	2	222212
4091	74	FORD	PINT	22942	1	3	3	3	3	3	4	4	4	3	4	2	3	09	134444	04	1	21	24	20	1	2	222212
4092	74	FORD	TORI	50784	1	3	5	3	2	3	3	4	2	3	2	3	3	05	233344	30	4				1	1	222212
4093	74	FORD	MAVE	42484	2	3	4	3	1	3	4	4	1	4	3	4	3	25	133444	04	1				1	2	222212
4094	74	FORD	STAW	28348	2	2	3	4	2	3	3	3	3	2	4	3	3	15	432434	02	1		13	11	1	2	222212
4095	74	FORD	TORI	30704	1	3	3	3	3	3	3	3	3	3	4	3	3	10	233334	04	1	13	15	12	1	2	222212
4096	74	MERC	COUG	29024	1	3	3	3	2	3	3	4	2	3	4	2	3	20	232444	02	1		16	11	1	2	222212
4097	74	OLDS	CUTL	18474	1	4	2	2	3	3	2	4	2	4	4	3	3	15	244444	04	1	15	20	12	1	2	222212
4098	74	OLDS	CUST	41412	1	4	3	2	3	4	3	4	2	3	4	3	1	05	324444	03	1	10	11	09	1	2	222212
4099	74	PLYM	VALI	24927	2	2	3	3	3	3	3	4	2	3	4	3	2	20	332444	02	1	14			1	2	222212
4100	74	PLYM	VALI	27863	1	4	3	3	2	3	4	4	2	3	4	3	2	10	233444	06	1	16	19	15	1	2	222212

APPENDIX B

LISTING OF TEST VEHICLE USE DATA

WASHINGTON D.C.

VEH	YR	MAKE	MODL	ODOM	N	PUR	YMT	F	C	O	I	R	W	S	B	V	L	MI	VEHUSE	TR	F	OA	HD	CD	H	U	DAMAGE
4101	74	PONT	VENT	16663	1	3	2	3	2	2	4	4	1	4	4	4	3	15	134444	03	1	15			1	2	222212
4102	74	DATS	710	31003	2	3	4	2	4	4	4	4	3	4	2	4	3	45	333444	06	3	22	27	22	1	2	222212
4103	74	TOYO	CORO	21563	1	3	3	3	3	3	2	2	2	2	4	3	3	10	332444	02	1				1	2	222212
4104	74	TOYO	CELI	30995	1	3	4	3	3	3	3	4	2	3	4	3	3	35	243444	02	1	23	25		1	2	222212
4105	74	VOLK	SEDA	38714	1	3	4	3	3	4	4	3	4	3	2	3	1	05	144444	06	4	22	25	19	1	2	222212
4106	74	VOLK	SEDA	24779	1	3	4	2	3	3	4	4	2	3	3	3	3	05	244444	06	1	21	24	18	1	2	222212
3107	73	AMC	HORN	32274	1	4	2	3	3	1	3	4	1	3	4	3	3	18	233444	02	1		20		1	2	222212
3108	73	BUIC	CNTR	34672	2	1	3	2	4	4	3	4	1	3	3	4	1	05	234444	05	1				1	2	222221
3109	73	BUIC	LESA	71235	1	4	5	3	3	4	3	4	4	3	4	1	2	15	323444	08	1	13	15	11	1	2	222212
3110	73	CADI	DEVI	39749	1	4	3	4	4	4	4	4	4	2	4	3	3	25	234444	02	1	15			1	2	222212
3111	73	CHEV	VEGA	71103	1	4	5	2	3	3	2	4	3	4	2	4	3	30	323444	04	3	20	24	17	1	2	222212
3112	73	CHEV	MONT	62850	1	4	4	3	3	3	3	4	2	4	2	4	3	30	224444	08	1	13	16	10	1	2	222212
3113	73	CHEV	CAMA	39422	1	4	3	2	3	3	3	4	2	3	3	4	2	15	134444	03	1	18	18	14	1	2	222212
3114	73	CHEV	BELA	23033	1	4	2	4	1	3	3	4	4	2	4	3	2	06	432444	02	1	11	12	10	1	2	222212
3115	73	CHEV	NOVA	42795	1	4	3	3	4	4	4	2	1	3	4	3	1	20	134444	04	3	15	12		1	2	222212
3116	73	DODG	DART	63968	1	4	5	4	4	3	2	4	2	3	4	4	2	20	323444	04	1	18	21		1	2	222212
3117	73	FORD	PINT	62168	1	4	5	4	3	3	3	4	1	4	4	4	3	21	133444	04	4	21	27	19	1	2	222212
3118	73	FORD	TORI	55204	2	3	4	2	3	4	4	4	1	3	4	4	3	12	224444	04	1	14	16		1	2	222212
3119	73	FORD	MAVE	45721	2	3	2	1	3	3	4	4	2	3	3	4	1	10	134444	10	1	10	12	10	1	2	212222
3120	73	FORD	TORI	63308	1	4	5	3	3	3	3	3	4	3	4	2	3	25	234444	02	4	14	16		1	2	222212
3121	73	FORD	LTD	32453	1	4	3	3	2	3	4	3	4	3	4	2	3	30	413444	02	1	13	17	11	1	2	222212
3122	73	MERC	MONG	43214	1	4	3	2	3	3	3	4	4	2	4	3	2	15	442444	02	1	12	13	09	1	2	222212
3123	73	OLDS	98	40815	1	4	3	2	4	3	4	4	4	2	3	3	3	15	333444	05	1				1	2	222212
3124	73	OLDS	CUTL	34342	2	3	4	3	3	2	3	3	3	2	3	3	3	25	332344	10	1				5	2	222212
3125	73	PLYM	SATE	41771	1	4	3	3	3	3	2	3	4	3	4	2	3	22	324444	02	1	17	18	15	1	2	222212
3126	73	PLYM	VALI	33003	1	4	3	3	1	3	3	3	2	3	3	3	2	40	232444	10	2	18	18	12	1	2	222212
3127	73	PONT	GRNV	29437	1	4	2	3	3	2	4	4	2	3	4	3	2	15	234444	02	1			12	1	2	222212
3128	73	PONT	LEMA	53322	1	4	4	3	3	4	2	3	2	3	4	3	2	12	144444	03	1				1	2	222212
3129	73	DATS	610	36767	2	4	2	3	3	3	3	3	3	2	4	3	3	20	234444	04	2		25	18	1	2	222212
3130	73	OPEL	1900	43967	2	2	3	3	2	3	3	4	2	3	4	3	3	06	233444	03	1	25			1	2	222212
3131	73	TOYO	CORO	27366	1	4	2	3	4	3	4	4	3	2	4	3	3	20	323444	02	2	20	23	18	1	2	222212
3132	73	VOLK	TRAN	61763	1	4	4	2	3	3	3	4	4	3	4	2	2	05	223444	04	3	17	19	15	1	2	222122
3133	73	VOLK	SEDA	71609	2	4	5	3	3	4	2	4	3	4	4	2	2	10	144443	08	3	22	28	21	1	2	122222

Appendix C

LISTING OF TEST VEHICLE MAINTENANCE DATA

CALIFORNIA, ST. LOUIS, AND WASHINGTON, D.C.
(Test Location)

COLUMN HEADING	DESCRIPTION	NUMBER OF DIGITS
VEH:	Vehicle Number	4
YR:	Model Year	2
MAKE:	Vehicle Make	4
MODL:	Vehicle Model	4
VIN:	Vehicle Identification Number	13
PERFORM:	Any Engine Performance Problems (1 = yes, 2 = no) a) Hard Starting (1 or 2) b) Stalling (1 or 2) c) Rough Idle (1 or 2) d) Engine Misfiring (1 or 2) e) Poor Acceleration (1 or 2) f) Stumbling (1 or 2) g) Dieseling (after run) (1 or 2) h) Other (1 or 2) i) No Major Problems (1 or 2)	9
S:	Reasonably Satisfied With Engine Performance (1 = yes, 2 - most of the time, 3 = no)	1
O:	How long ago was the last oil change? (1 = Too new not due, 2 = Due but not done, 3 = 0-6 mos, 4 = 6-12 mos, 5 = over 1 yr., 6 = Don't know)	1
T:	How often is vehicle tuned-up? (1 = No tune up yet, 2 = Per. mfrs. rec., 3 = Every 6 mos, 4 = Every year, 5 = Less often, 6 = Don't know)	1
L:	How long ago was the last tune-up? (1 = too new not due, 2 = due but not done, 3 = 0-6 mos, 4 = 6-12 mos, 5 = over 1 yr., 6 = don't know)	1
U:	Who performed this tune-up? (1 - No tune up, 2 = Dealer, 3 = Independent garage, 4 = Tune-up clinic, 5 = yourself, 6 = Don't know)	1
C:	Approximately how much did the tune-up cost? (Dollars or 001 = No Tune-Up, 002 = Don't know)	3
R:	Would you consider the vehicle has been maintained in accordance with the manufacturer's recommendations? (1 = yes, 2 = no, 3 = not sure, 4 = don't know)	1

W:	How many times has this vehicle been returned for warranty repairs? (1 = no warranty, 2 = never returned, 3 = once, 4 = twice, 5 = 3 or more, 6 = don't know)	1
D:	Was the vehicle returned for the correction of driveability problems? (1 = no warranty, 2 = never returned, 3 = yes, 4 = no)	1
P:	How long ago was it returned for the correction of any driveability problems: (1 = no warranty, 2 = never returned, 3 = 0-6 mos, 4 = 3-6 mos, 5 = over 6 mos, 6 = don't know)	1
V:	Does your vehicle require the use of unleaded fuel? (1 = yes, 2 = no)	1
N:	If your vehicle requires unleaded fuel, how often is leaded fuel used? (1 = not required, 2 = never, 3 = seldom, 4 = occasionally, 5 = frequently, 6 = don't know)	1
PB:	Lead content of owners fuel	
FUEL:	Brand name of fuel normally used	16
MMT:	Manganese additive present (1 = yes, 2 = no) (Phoenix, St. Louis only)	1
M:	Has this vehicle even been modified by the installation of high performance equipment? (1 = yes, 2 = no, 3 = don't know)	1

APPENDIX C

LISTING OF TEST VEHICLE MAINTENANCE DATA

CALIFORNIA

VEH	YR	MAKE	MODL	VIN	PERFORM	S	O	T	L	U	C	R	W	D	P	V	N	PB	FUEL	MMT	M
7001	76	CHEV	G10V	CGD156U158199	222222221	1	3	2	1	1	001	1	2	2	2	1	2	0.111	ARCO UNLD		2
7002	76	CHEV	C10	CCD146Z139642	222222122	3	3	2	1	1	001	1	2	2	2	1	2	0.022	TEXACO UNLD		2
7003	76	CHEV	C10	CGD156U207599	122222222	1	3	1	1	1	001	1	5	4	2	1	2	0.006	TEXACO UNLD		2
7004	76	CHEV	SCOT	CCD146Z145498	222222221	1	3	1	1	1	001	1	2	2	2	1	2	0.014	UNION UNLD		2
7005	76	DODG	B100	B11AB6X115924	221222122	1	3	2	3	2	018	1	4	4	2	1	2	0.012	TEXACO UNLD		2
7006	76	DODG	CUST	D14AE6S247218	222222221	1	3	1	1	1	001	1	5	4	2	1	2	0.023	UNION UNLD		2
7007	76	FORD	E100	E04BHC18859	222222221	1	1	1	1	1	001	1	3	4	2	1	2	0.027	MANN UNLD		2
7008	76	FORD	F100	F10YRA54602	222222221	1	3	2	3	2	002	1	3	4	2	1	2	0.035	ARCO UNLD		2
7009	76	FORD	E100	E04BHB05033	222222221	1	3	2	4	2	002	1	4	3	5	1	2	0.020	SHELL SUPER REG		2
7010	76	TOYO	SR5	RN28021290	222222221	1	4	1	1	1	001	1	2	2	2	1	2	0.027	STANDARD UNLD		2
7011	75	CHEV	G10V	CGY155U174037	222222221	1	1	1	1	1	001	1	5	4	2	1	2	0.002	COINOP UNLD		2
7012	75	CHEV	C10	CCY145Z124087	221221112	3	3	2	3	3	080	1	3	4	2	1	2	0.015	TEXACO UNLD		2
7013	75	CHEV	G10V	CGY155U164199	222222221	2	3	2	1	5	001	1	5	3	5	1	2	0.005	SHELL UNLD		2
7014	75	DODG	TRAD	B11AE5X041503	222222221	1	3	2	3	4	037	1	5	3	3	1	2	0.010	SHELL SUPER REG		2
7015	75	FORD	F100	F10BRV46107	222222221	1	3	2	3	2	053	1	2	2	2	1	2	0.027	UNION UNLD		2
7016	75	FORD	F100	F10YRV20116	222222221	1	3	4	4	2	040	1	3	4	2	1	2	0.023	ARCO UNLD		2
7017	75	FORD	E100	E04HHW82518	222222221	1	3	4	1	1	001	1	2	2	2	1	2	0.010	ARCO UNLD		2
6018	76	AMC	PACE	A6A667A210071	222222221	1	3	3	3	3	010	1	3	4	2	1	2	0.014	MOBIL UNLD		2
6019	76	BUIC	REGA	4J29J62115882	222222221	1	1	1	1	1	001	1	2	2	2	1	2	0.010	SHELL UNLD		2
6020	76	BUIC	REGA	4J57J6Z100356	222222221	1	3	2	3	2	045	1	2	2	2	1	2	0.038	MOBIL UNLD		2
6021	76	CADI	COUP	6D47S60207391	222222221	1	3	4	2	1	001	1	2	2	2	1	2	0.005	TEXACO UNLD		2
6022	76	CHEV	MONT	1H57L62434039	222222221	1	1	1	1	1	001	1	2	2	2	1	2	0.007	MOBIL UNLD		2
6023	76	CHEV	MONT	1H57L6Z434241	222222221	1	1	1	1	1	001	1	2	2	2	1	2	0.010	MOBIL UNLD		2
6024	76	CHEV	VEGA	1V77B6U225606	222222221	1	1	1	1	1	001	1	2	2	2	1	2	0.021	MOBIL UNLD		2
6025	76	CHEV	CAPR	1N69U6J150307	212121222	2	3	3	3	2	050	1	3	4	2	1	2	0.001	TEXACO UNLD		2
6026	76	CHEV	CAMA	1S8706L527516	222222221	1	3	1	1	1	001	1	3	4	2	1	2	0.020	UNION UNLD		2
6027	76	CHEV	NOVA	1X27D6L131653	222222221	1	1	1	1	1	001	1	5	3	3	1	2	0.007	SHELL UNLD		2
6028	76	CHEV	CHEV	1B08E6Y169293	222222221	1	3	1	1	1	001	1	2	2	2	1	2	0.008	SHELL UNLD		2
6029	76	DODG	ASPE	NH29G6B414274	122222222	1	1	3	1	1	001	1	4	3	3	1	2	0.035	SHELL UNLD		2
6030	76	DODG	ASPE	NL45C6B269767	222222221	1	3	2	1	1	001	1	3	4	2	1	2	0.014	SHELL UNLD		2
6031	76	FORD	PINT	6R11Y106313	222222221	1	1	1	1	1	001	1	2	2	2	1	2	0.010	TEXACO UNLD		2
6032	76	FORD	LTD	6J76S174003	222222221	1	1	1	1	1	001	1	3	3	3	1	2	0.013	TEXACO UNLD		2
6033	76	FORD	GRAN	6W82F296163	222222221	2	1	1	1	1	001	1	5	4	2	1	2	0.022	MOBIL UNLD		2
6034	76	FORD	GRAN	6W82L131648	222222221	1	1	1	1	1	001	1	2	2	2	1	2	0.016	SHELL UNLD		2
6035	76	FORD	GRAN	6W82F278230	222222221	1	1	1	1	1	001	1	2	2	2	1	2	0.024	MOBIL UNLD		2
6036	76	FORD	ELIT	6G21H107776	221212222	2	2	1	1	1	001	1	5	3	4	1	2	0.018	STANDARD UNLD		2
6037	76	MERC	MONG	6H08H533228	222222221	1	3	1	1	1	001	1	2	2	2	1	2	0.037	MOBIL UNLD		2
6038	76	MERC	BOBC	6T22Y506713	222222221	1	3	2	3	2	024	1	3	4	2	1	2	0.019	UNION UNLD		2
6039	76	OLDS	OMEG	3E69D6L105863	122222222	1	3	3	3	2	086	1	5	3	3	1	2	0.020	UNION UNLD		2
6040	76	OLDS	CUTL	3K57P6M294246	222221222	1	3	1	1	1	001	1	5	3	5	1	2	0.042	UNION UNLD		2
6041	76	OLDS	VIST	3J35R6R111802	222222221	1	3	2	3	2	065	1	3	3	5	1	2	0.020	STANDARD UNLD		2
6042	76	PLYM	VOLA	HL29C6B366478	222222221	1	1	1	1	1	001	1	2	2	2	1	2	0.125	SHELL UNLD		2
6043	76	PLYM	VOLA	HL45G6B212552	221222222	2	3	1	1	1	001	1	4	3	3	1	2	0.045	UNION UNLD		2
6044	76	PONT	FIRE	2T87P6N593014	222222221	1	3	1	1	1	001	1	4	3	3	1	2	0.013	SHELL UNLD		2
6045	76	PONT	GRNP	2K5726P114971	222222221	1	3	1	2	1	001	1	4	4	2	1	2	0.050	ARCO UNLD		2
6046	76	DATS	B210	HLB210165204	222222221	1	3	1	1	1	001	1	2	2	2	1	2	0.030	SHELL UNLD		2
6047	76	DATS	610	HL610075403	222222221	1	3	1	1	1	001	1	3	3	3	1	2	0.025	ARCO UNLD		2
6048	76	TOYO	CORR	TE51523801	222222221	1	1	1	1	1	001	1	2	2	2	1	2	0.035	SHELL UNLD		2
6049	76	TOYO	CORO	TR105021322	222221222	3	3	3	3	2	040	1	3	3	3	1	2	0.008	UNION 76 UNLD		2
6050	76	VOLK	SEDA	1162159396	222222221	1	3	1	1	1	001	1	2	2	2	1	2	0.054	UNION UNLD		2

APPENDIX C

LISTING OF TEST VEHICLE MAINTENANCE DATA

CALIFORNIA

VEH	YR	MAKE	MODL	VIN	PERFORM	S	O	T	L	U	C	R	W	D	P	V	N	PB	FUEL	MMT	M
6051	76	VOLK	SCIR	5362050781	222222221	1	3	2	3	2	002	1	2	2	2	1	2	0.025	SHELL UNLD		2
5052	75	AMC	PACE	A5A667A277942	222222221	1	3	3	3	2	024	1	2	2	2	1	2	0.012	WORLD UNLD		2
5053	75	BUIC	REGA	4J29J5Z106804	122221222	2	3	2	3	2	050	1	3	3	5	1	2	0.010	UNION UNLD		2
5054	75	BUIC	REGA	4J29J52103257	111111222	3	3	2	3	3	032	1	5	3	3	1	2	0.012	TEXACO UNLD		2
5055	75	CADI	DEVI	6D47S5Q103276	222222221	3	3	2	3	2	100	1	4	3	3	1	2	0.020	SHELL SUPER REG		2
5056	75	CHEV	MONZ	1R07B52172035	222222221	1	3	4	3	2	044	1	2	2	2	1	2	0.013	SHELL UNLD		2
5057	75	CHEV	MALI	1D29L5Z461764	211221122	2	3	2	3	2	040	1	4	3	3	1	2	0.070	SHELL UNLD		2
5058	75	CHEV	IMPA	1K45U5J166586	222222221	1	3	4	3	2	060	1	1	1	1	1	2	0.005	UNION UNLD		2
5059	75	CHEV	IMPA	1L4715J124913	221212222	3	3	1	1	1	001	1	4	3	4	1	2	0.008	ARCO UNLD		2
5060	75	CHEV	NOVA	1X27D5L156594	122222222	1	1	1	1	1	001	1	3	3	3	1	2	0.010	UNION UNLD		2
5061	75	CHRY	CORD	SS22J5R321982	222222221	1	3	4	4	5	010	1	5	3	3	1	2	0.003	MOBIL UNLD		2
5062	75	DODG	DART	LL29G56164353	222222221	1	3	4	3	2	045	1	2	2	2	1	2	0.020	GEMCO UNLD		2
5063	75	FORD	PINT	6R10Y118115	222222221	1	3	2	3	5	015	1	1	1	1	1	2	0.008	MOBIL UNLD		2
5064	75	FORD	LTD	5J6211136803	222222221	1	3	1	1	1	001	1	3	4	2	1	2	0.009	SHELL UNLD		2
5065	75	FORD	LTD	5J68A138379	222222221	1	3	1	2	1	001	3	5	4	2	1	2	0.016	FIRE CHIEF UNLD		2
5066	75	FORD	GRAN	5W81L120055	222222221	1	3	2	3	2	002	1	5	3	3	1	2	0.038	STANDARD UNLD		2
5067	75	FORD	GRAN	5W81F114844	222222221	1	3	2	3	3	045	1	2	2	2	1	2	0.105	TEXACO UNLD		2
5068	75	MERC	MONT	5H11S511117	222222221	2	4	1	1	1	001	1	4	3	5	1	2	0.020	SHELL UNLD		2
5069	75	OLDS	CUTL	3J29K5R156683	222222221	1	3	3	3	2	035	1	2	2	2	1	2	0.024	UNION		2
5070	75	OLDS	DELT	3R4515Y129606	222222221	1	3	2	2	1	001	1	5	3	3	1	2	0.030	ARCO UNLD		2
5071	75	PLYM	DUST	VL29C5G223750	122222222	1	3	2	3	2	002	1	2	2	2	1	2	0.005	UNION UNLD		2
5072	75	PLYM	STAW	RP46J5A137806	222222221	1	3	3	3	3	100	1	5	3	5	1	2	0.014	SHELL UNLD		2
5073	75	PONT	CATA	2L57S5X146745	222222221	1	3	1	1	1	001	3	2	2	2	1	2	0.053	MOBIL UNLD		2
5074	75	PONT	LEMA	2D29E5P114699	222222221	1	3	2	3	2	056	1	2	2	2	1	2		MOBIL UNLD		2
5075	75	DATS	B210	HLB21009030	222212222	2	3	2	3	3	060	1	2	2	2	1	2	0.017	SHELL UNLD		2
5076	75	TOYO	CORO	RT115003004	222222221	1	3	1	1	1	001	1	5	3	5	1	2	0.125	UNION UNLD		2
5077	75	TOYO	CORO	TE31042352	222222221	1	3	2	3	2	002	1	2	2	2	1	2	0.076	TEXACO UNLD		2
5078	75	VOLK	SEDA	1152021821	222222221	2	3	2	1	1	001	1	5	3	3	1	2	0.050	UNION 76 REG UNL		2
5079	75	VOLK	RABB	1753392509	222222221	3	3	4	3	2	002	1	4	4	2	1	2	0.006	MOBIL UNLD		2
4080	74	AMC	MATA	A4A169H229269	222222221	2	3	4	3	5	015	2	5	3	5	2	1		MOBIL REG		2
4081	74	BUIC	LESA	4P57T4X131995	222212212	2	3	4	3	2	040	1	4	4	2	2	1		EXXON REG		2
4082	74	CADI	COUP	6D47R4Q101475	222222221	1	3	3	3	2	002	1	1	1	1	2	1		MOBIL REG		2
4083	74	CHEV	VEGA	1V77A4U272893	222212222	2	3	4	2	3	028	4	3	3	5	2	1		ARCO REG		2
4084	74	CHEV	MONT	1H57L4Z407662	222222221	1	3	4	3	3	045	1	1	1	1	2	1		UNION REG		2
4085	74	CHEV	MONT	1H57Y47473787	222222221	1	3	4	4	3	035	1	2	2	2	2	1		TEXACO REG		2
4086	74	CHEV	CAPR	1N39U4C136733	222222221	1	3	2	3	2	002	3	2	2	2	2	1		MOBIL PREM		2
4087	74	CHEV	IMPA	1L39H4J172316	222222221	1	3	3	3	3	050	1	1	1	1	2	1		TEX OR STAND REG		2
4088	74	CHEV	CAPR	1N47U4C115598	222222221	2	3	3	3	2	150	1	2	2	2	2	1		PENNYS PREM.		2
4089	74	CHRY	NEWP	CL43J4C143614	122222222	1	3	2	3	3	065	1	2	2	2	2	1		UNION PREM		2
4090	74	DODG	DART	LH23C46104041	122222222	3	3	4	4	3	018	1	5	3	5	2	1		SHELL SUPER REG		2
4091	74	FORD	PINT	4R11Y232850	222222221	1	3	3	3	3	030	1	3	4	2	2	1		SHELL REG		2
4092	74	FORD	MAVE	4K91F118175	222222221	1	3	4	4	2	050	1	5	4	2	2	1		SHELL UNLD		2
4093	74	FORD	MUST	4F03Y288603	222222221	1	3	2	3	5	002	1	2	2	2	2	1		TEXACO REG		2
4094	74	FORD	LTD	4J63S128737	222222221	2	3	4	3	3	045	1	1	1	1	2	1		TEXACO REG		2
4095	74	FORD	LTD	4J67H111347	222222221	1	3	4	3	2	032	1	3	2	2	2	1		SHELL REG		2
4096	74	MERC	MONT	4254A541637	222222221	1	3	3	3	2	002	1	2	2	2	2	1		MOBIL		2
4097	74	OLDS	CUTL	3J57K4R139220	222222221	1	4	4	4	2	050	1	2	2	2	2	1		SHELL UNLD		2
4098	74	OLDS	CUTL	3J29K4R102953	222222221	1	3	2	3	2	027	1	3	3	5	2	1		GEMCO REG		2
4099	74	PLYM	SATE	RL21G4G206114	122222222	1	3	2	3	5	020	1	4	3	5	2	1		ARCO		2
4100	74	PLYM	DUST	VL29C4B321940	122222222	1	4	4	4	5	015	1	3	4	2	2	1		UNION REG		2

APPENDIX C

LISTING OF TEST VEHICLE MAINTENANCE DATA

CALIFORNIA

VEH	YR	MAKE	MODL	VIN	PERFORM	S	O	T	L	U	C	R	W	D	P	V	N	PB	FUEL	MMT	M
4101	74	PONT	VENT	2Z27M4L134024	222222221	1	3	2	3	2	045	1	1	1	1	2	1		MOBIL REG		2
4102	74	DATS	710	JHL710805370	222222221	1	3	3	3	3	030	1	1	1	1	2	1		MOBIL REG		2
4103	74	TOYO	CORO	TE28563373	222222221	1	4	4	4	2	060	1	2	2	2	2	1		TEXACO REG		2
4104	74	TOYO	CELI	RA21124417	212222222	1	3	3	3	4	002	1	2	2	2	2	1		MOBIL REG		2
4105	74	VOLK	SEDA	1342381500	222222221	1	3	3	3	5	010	1	5	4	2	2	1		LERNERS REG		2
4106	74	VOLK	SEDA	1342307209	222222221	1	3	2	3	2	035	1	2	2	2	2	1		GEMCO REG.		2
3107	73	AMC	HORN	A3A087A261361	222222221	1	3	4	4	4	030	1	5	4	2	2	1		RENO PREM		2
3108	73	BUIC	REGA	4J57T3Z10720	222212222	1	3	4	3	3	002	1	2	2	2	2	1		TEXACO REG		2
3109	73	BUIC	REGA	4J57J3Z123542	222222221	1	4	4	4	3	002	1	2	2	2	2	1		SHELL REG		1
3110	73	CADI	COUP	6D47R30142697	222222221	1	3	4	4	2	045	1	1	1	1	2	1		UNION REG		2
3111	73	CHEV	VEGA	1V77B3U360479	222222221	1	3	3	3	2	045	1	2	2	2	2	1		CHEVRON REG		2
3112	73	CHEV	MONT	1H57H3Z434924	222222221	1	3	4	3	4	035	1	2	2	2	2	1		ARCO REG		2
3113	73	CHEV	NOVA	1X27H3L103237	222222221	1	3	3	3	5	015	1	1	1	1	2	1		MOBIL REG		2
3114	73	CHEV	IMPA	1L39H3C121607	222222221	1	3	4	3	2	060	1	1	1	1	2	1		MOBIL REG		2
3115	73	CHEV	CAPR	1N39R31149831	222222221	1	3	4	3	2	080	1	2	2	2	2	1		GEMCO REG		2
3116	73	DODG	DART	LL41C3R120016	222222221	1	3	4	4	3	002	3	2	2	2	2	1		MOBIL REG		2
3117	73	FORD	PINT	3R12X119515	212222222	1	3	2	4	2	040	1	4	4	2	2	1		MOBIL REG		2
3118	73	FORD	TORI	3A35S119254	222222221	1	3	3	3	2	035	1	2	2	2	2	1		SHELL REG		2
3119	73	FORD	MAVE	3K91F198595	211222222	2	3	4	4	2	100	1	3	3	5	2	1		GULFTANE		2
3120	73	FORD	STAW	3J76N162094	222222221	1	3	3	3	3	025	1	5	3	5	2	1		COINOP REG		2
3121	73	FORD	TORI	3H35H165817	222222221	1	3	4	3	5	010	1	1	1	1	2	1		SHELL REG		2
3122	73	MERC	MONT	3Z44S534789	222222221	1	3	3	3	4	002	4	1	1	1	2	1		ARCO PREM		2
3123	73	OLDS	STAW	3R45T3X116854	122222222	2	3	2	3	2	030	1	2	2	2	2	1		MOBIL REG		2
3124	73	OLDS	CUTL	3F37K3R129209	222222221	1	3	4	4	3	075	1	1	1	1	2	1		TEXACO PREM		2
3125	73	PLYM	VALI	VL41C3P140206	222222221	1	3	2	3	3	012	1	2	2	2	2	1		SHELL REG		2
3126	73	PLYM	DUST	VL29C3G228744	222222122	1	2	4	3	4	025	1	1	1	1	2	1		MOBIL REG		2
3127	73	PONT	LEMA	2D45T3Z105409	222222221	1	3	3	3	5	012	1	2	2	2	2	1		PENNYS PREM		2
3128	73	PONT	LEMA	2D35M3Z101543	222222221	1	3	3	3	2	002	1	2	2	2	2	1		EXXON		2
3129	73	DATS	1600	PL620281317	222222221	1	3	3	3	5	010	3	2	2	2	2	1		SHELL SUPER		2
3130	73	OPEL	MANT	444371H170041	222222122	1	3	2	3	2	035	1	2	2	2	2	1		TEXACO REG		2
3131	73	TOYO	CORO	TE21640638	222222221	1	3	3	3	5	002	1	2	2	2	2	1		CHEVRON REG		2
3132	73	VOLK	SEDA	1332483550	222222221	1	3	3	3	3	025	1	3	3	5	2	1		MOBIL REG		2
3133	73	VOLK	SEDA	1332149162	222222221	1	3	2	3	2	041	1	3	4	2	2	1		ARCO REG		2
2134	72	AMC	GREM	A2A465E145666	122222222	1	3	4	3	3	054	1	3	4	2	2	1		GULFTANE		2
2135	72	BUIC	SKYL	4H39H2Z103905	222222221	1	3	2	3	2	070	1	2	2	2	2	1		FIRE CHIEF		2
2136	72	CADI	FLEE	6B69R20209177	222222221	1	3	2	4	2	002	1	1	1	1	2	1		MOBIL PREM		2
2137	72	CHEV	VEGA	1V1182U316508	222222221	2	4	4	4	2	002	1	3	3	5	2	1		ARCO REG		2
2138	72	CHEV	MALI	1D37J2L566693	222222221	1	3	2	3	3	037	1	2	2	2	2	1		SUPER SHELL REG		2
2139	72	CHEV	MONT	1H57J2L552340	222222221	1	3	4	4	2	050	1	2	2	2	2	1		MOBIL		2
2140	72	CHEV	NOVA	1X27F2W361205	222222221	1	3	4	3	5	010	1	1	1	1	2	1		COINOP REG		2
2141	72	CHEV	IMPA	1M69R2C175656	222222221	1	3	4	4	3	042	1	5	4	2	2	1		UNION REG		2
2142	72	CHEV	STAW	1M45R2C125355	222222221	1	3	4	3	5	035	1	1	1	1	2	1		GEMCO REG		2
2143	72	DODG	CORO	WH45G2A211371	221222222	1	3	4	3	2	060	1	2	2	2	2	1		MOBIL PREM		2
2144	72	FORD	PINT	2111X213558	122222222	1	3	4	3	5	012	1	1	1	1	2	1		SHELL REG		2
2145	72	FORD	TORI	2A42F165840	222222221	1	3	4	4	5	010	1	2	2	2	2	1		TEXACO REG		2
2146	72	FORD	MUST	2F01L210962	222222221	1	3	2	3	5	015	1	2	2	2	2	1		WORLD PREM		2
2147	72	FORD	STAW	2J74S105009	222222221	1	3	2	3	5	014	1	1	1	1	2	1		TEXACO REG		1
2148	72	FORD	STAW	2J74S115931	222222221	1	3	3	3	3	002	1	1	1	1	2	1		MANN REG		2
2149	72	MERC	MONG	2H10S579362	222222221	1	3	4	4	5	002	1	2	2	2	2	1		SHELL REG		2
2150	72	OLDS	DELT	3L57K2X122115	222222221	1	3	4	4	3	002	1	3	4	2	2	1		ARCO SUP		2

APPENDIX C

LISTING OF TEST VEHICLE MAINTENANCE DATA

CALIFORNIA

VEH	YR	MAKE	MODL	VIN	PERFORM	S	O	T	L	U	C	R	W	D	P	V	N	PR	FUEL	MMT	M
2151	72	PLYM	DUST	VL29C2B413583	222222221	1	3	5	5	2	002	3	4	4	2	2	1		CHEVRON REG		2
2152	72	PLYM	SATE	RP23M2C223926	221222222	2	3	3	3	4	036	1	1	1	1	2	1		MOBIL REG		2
2153	72	PONT	CATA	2L35R2C324359	222222221	1	3	3	3	2	052	1	2	2	2	2	1		SHELL REG		2
2154	72	PONT	BONN	2N57V2C320709	221222222	1	3	4	3	5	020	1	4	4	2	2	1		SHELL REG		2
2155	72	DATS	510	PL510404318	222222212	1	3	2	3	5	002	1	2	2	2	2	1		FIRE CHIEF		2
2156	72	TOYO	CORO	RT79004725	222222221	1	3	2	3	3	020	1	1	1	1	2	1		TEXACO		2
2157	72	VOLK	SEDA	1122142403	222222221	1	3	4	3	3	035	3	1	1	1	2	1		TEXACO REG		2
2158	72	VOLK	SEDA	1122040200	222222221	1	3	2	3	5	015	4	1	1	1	2	1		TEXACO REG		2
1159	71	BUIC	LESA	452571C111652	222222221	1	3	2	3	2	072	1	2	2	2	2	1		MOBIL PREM		2
1160	71	BUIC	SKYL	444371Z109427	221222222	1	4	3	3	3	035	2	1	1	1	2	1		TEXACO PREM		2
1161	71	CHEV	VEGA	141771U370428	222122222	1	3	2	3	2	040	1	5	3	5	2	1		FEDCO REG		2
1162	71	CHEV	MONT	138571L124940	222222221	1	3	3	3	5	010	1	1	1	1	2	1		SHELL REG		2
1163	71	CHEV	CAMA	124871N550163	222222221	1	3	3	3	3	002	1	1	1	1	2	1		STANDARD PREM		2
1164	71	CHEV	KING	166451C183328	222222221	3	3	3	3	3	040	3	1	1	1	2	1		TEXACO REG		2
1165	71	CHEV	MALI	136371L121750	222222221	1	4	4	5	2	002	3	1	1	1	2	1		UNION PREM		2
1166	71	CHRY	STAW	CP45N1C237957	222222221	2	3	6	3	3	015	3	1	1	1	2	1		MOBIL REG		2
1167	71	DODG	CHAR	WP23N1E159068	122222222	1	3	4	5	3	070	1	3	4	2	2	1		FEDCO REG		2
1168	71	FORD	PINT	1R10X156064	222222221	1	3	3	3	4	018	3	6	4	2	2	1		SHELL REG		2
1169	71	FORD	TORI	1A30F188553	222222221	1	3	4	3	3	090	1	2	2	2	2	1		GULF REG		2
1170	71	FORD	MAVE	1K92L121428	222222221	1	3	3	3	5	010	3	1	1	1	2	1		UNION PREM		2
1171	71	FORD	CUST	1J53H183856	222222221	2	3	3	3	5	014	3	1	1	1	2	1		MOBIL PREM		2
1172	71	FORD	RANC	1J70H182026	222222221	1	3	4	4	3	002	1	1	1	1	2	1		ARCO REG		2
1173	71	MERC	COUG	1F93H520618	221222222	1	3	3	3	5	020	3	1	1	1	2	1		SUPER SHELL		2
1174	71	OLDS	CUTL	331871Z114009	222222221	1	3	3	3	3	030	3	1	1	1	2	1		RENO PREM		2
1175	71	PLYM	DUST	VL29C1B370261	221221221	2	3	1	2	2	002	1	1	1	1	2	1		WORLD REG		2
1176	71	PONT	LEMA	233271P114131	222222221	1	3	3	3	5	014	1	1	1	1	2	1		TEXACO REG		2
1177	71	PONT	GRNP	276571A104738	222222112	2	3	3	4	2	081	1	5	3	5	1	3		GULFTANE		1
1178	71	DATS	510	PL510902051	222222221	1	3	3	4	3	030	1	2	2	2	2	1		ARCO SUPREME		2
1179	71	TOYO	CORO	RT93007889	222222221	1	3	4	4	5	010	1	2	2	2	2	1		SHELL REG		2
1180	71	VOLK	SQUA	3612007317	222222221	1	3	4	3	3	020	1	1	1	1	2	1		MOBIL REG		2
0181	70	AMC	GREM	A0S465A328105	222222221	1	3	6	6	6	002	3	1	1	1	2	1		TEXACO REG		2
0182	70	BUIC	ELEC	484570H220573	222222221	1	3	4	3	5	002	1	2	2	2	2	1		MANN PREM		2
0183	70	CHEV	NOVA	113690W347339	212222122	1	3	4	3	3	040	1	2	2	2	2	1		SHELL SUPER REG		2
0184	70	CHEV	CAME	124870L518337	122222222	1	3	2	3	5	017	1	2	2	2	2	1		TEXACO REG		2
0185	70	CHEV	IMPA	166460C185839	222222221	1	3	5	5	3	055	2	2	2	2	2	1		MANN PREM		2
0186	70	CHEV	IMPA	164370C115395	222222221	1	3	4	3	2	032	1	1	1	1	2	1		TEXACO PREM		2
0187	70	CHEV	NOVA	114270W312277	222222221	1	3	3	3	4	027	1	2	2	2	2	1		SHELL PREM		2
0188	70	DODG	DART	LL23C0R250171	222222221	1	3	2	4	3	045	1	2	2	2	2	1		MANNS REG		2
0189	70	FORD	MAVE	0K91T326445	222222221	2	3	4	3	5	019	1	1	1	1	2	1		POWERINE PREM		2
0190	70	FORD	GALA	0J54F150063	222222221	1	3	4	4	5	025	1	2	2	2	2	1		SHELL REG		2
0191	70	FORD	LTD	0J66K164918	221222222	1	3	4	3	3	025	3	2	2	2	2	1		SHELL PREM		2
0192	70	FORD	GALA	0J54H102030	222222122	1	3	4	4	5	002	3	1	1	1	2	1		UNION REG		2
0193	70	MERC	MARQ	0Z76N568384	222222221	1	3	3	3	5	008	1	3	3	5	2	1		UNION PREM		2
0194	70	OLDS	98	384670M180464	222222122	1	3	3	3	3	036	1	1	1	1	2	1		COIN OP REG		2
0195	70	PLYM	DUST	VL29C0E147816	122222222	1	3	4	3	5	002	3	2	2	2	2	1		TEXACO PREM		2
0196	70	PLYM	VALI	VL41G0B302763	221222222	1	6	6	6	6	002	4	1	1	1	2	1		GEMCO PREM		2
0197	70	PONT	TEMP	233370Z602652	222222221	1	3	3	3	2	002	1	2	2	2	2	1		TEXACO REG		2
0198	70	DATS	510	PL510844380	221221222	2	3	4	2	5	010	1	6	4	2	2	1		SHELL ETHYL		2
0199	70	TOYO	CORO	RT43206564	222222221	1	3	2	3	5	015	1	1	1	1	2	1		SEARS PREM		2
0200	70	VOLK	VAN	2202016446	222222221	1	3	3	3	2	002	1	1	1	1	2	1		MOBIL REG		2

APPENDIX C

LISTING OF TEST VEHICLE MAINTENANCE DATA

ST. LOUIS

VEH	YR	MAKE	MODL	VIN	PERFORM	S	O	T	L	U	C	R	W	D	P	V	N	PR	FUEL	MMT	M
7002	76	CHEV	C10	CCV146S205591	222222221	1	3	1	1	1	001	1	5	4	2	1	2	0.036	MOBIL UNLD		2
7003	76	CHEV	C10	CCV146S115080	222222221	1	3	4	3	2	058	1	2	2	2	1	2	0.013	SHELL UNLD		2
7005	76	DODG	B100	B12AE6X146114	222222221	1	3	4	3	2	002	1	4	3	3	1	2	0.022	STANDARD UNLD		2
7007	76	FORD	CLUB	E12BHA08398	222222221	1	3	4	3	5	010	1	5	4	2	2	1	0.100	MOTER REG		4
7008	76	FORD	F150	F15YUC77298	222222221	1	3	1	1	1	001	1	3	4	2	2	1	0.100	FINA REG		2
7010	76	TOYO	TRUC	RN23038235	222222221	1	3	1	1	1	001	1	2	2	2	2	1	0.100	FAS GAS REG		2
7011	75	CHEV	C10	CCV145S113372	222222122	1	3	4	4	3	032	1	5	4	2	1	2	0.023	MOBIL UNLD		2
7012	75	CHEV	TRUC	CCV145B164749	222222221	3	3	4	3	2	035	1	3	4	2	1	2	0.019	BONAFIDE UNLD		2
7013	75	CHEV	G10V	CGY165U171284	222222221	1	3	4	4	2	025	1	5	4	2	1	2	0.042	DERBY UNLD		2
7014	75	DODG	C100	D14AE5S127400	222222221	3	3	3	3	2	081	1	5	4	2	1	2	0.015	SERVICE OIL UNLD		2
7015	75	FORD	F100	F10GCV27414	222222221	1	3	1	2	1	001	1	2	2	2	1	2	0.040	MOBIL UNLD		2
7016	75	FORD	F100	F10BUV60232	222222221	1	3	4	4	5	010	1	1	1	1	1	2	0.002	VICKERS UNLD		2
7017	75	FORD	F100	F10YUW01729	222122222	1	6	6	6	6	002	1	3	4	2	2	2	0.027	LIBER NO LEAD		2
6018	76	AMC	HORN	A6A057A170862	222222221	1	3	1	1	1	001	1	5	4	2	1	2	0.012	SINCLAIR UNLD		2
6019	76	BUIC	STAW	4K45J6H205059	222222221	2	3	1	1	1	001	1	3	4	2	1	2	0.027	ZEPHYR UNLD		2
6020	76	BUIC	SKYL	4B69C6S155748	222222221	1	3	1	1	1	001	1	3	4	2	1	2	0.020	SHELL UNLD		2
6021	76	CADI	ELDO	6L47S6Q121412	222222221	1	3	1	1	1	001	1	3	4	2	1	2	0.017	STANDARD UNLD		2
6022	76	CHEV	IMPA	1L39V6S184417	222222221	1	3	1	1	1	001	1	5	4	2	1	2	0.093	STANDARD REG NOL		2
6023	76	CHEV	MONT	1H57V6D454374	222222221	1	3	5	2	1	001	1	3	4	2	1	2	0.025	SINCLAIR UNLD		2
6024	76	CHEV	VEGA	1V15B6U207566	222222221	2	3	1	1	1	001	1	5	4	2	1	2	0.016	FINA UNLD		2
6025	76	CHEV	STAW	1N45U6S196663	222221222	1	3	3	3	3	044	1	3	3	5	1	2	0.100	SHELL UNLD		2
6026	76	CHEV	ELCA	1D80Q6R510447	222222221	1	3	1	1	1	001	1	3	4	2	1	2	0.033	BONIFIDE UNLD		2
6027	76	CHEV	NOVA	1X17D6W128427	222222221	1	3	2	3	3	002	1	4	3	3	1	2	0.014	STANDARD UNLD		2
6029	76	DODG	STAW	NL45G6B258890	222222221	1	3	3	3	5	015	1	5	3	5	1	2	0.017	SHELL UNLD		2
6030	76	DODG	ASPE	NP41C6F286394	122222222	1	3	1	1	1	001	1	5	4	2	1	2	0.038	BONAFIDE UNLD		2
6031	76	FORD	MUST	6F02Y213205	222222221	1	3	4	3	3	002	1	5	4	2	1	2	0.040	SHELL UNLD		2
6032	76	FORD	STAW	6U76S175155	222222221	1	3	1	2	1	001	1	5	4	2	1	2	0.038	STANDARD UNLD		2
6033	76	FORD	STAW	6A42H155251	222222221	1	3	4	3	2	045	1	4	4	2	1	2	0.013	STANDARD UNLD		2
6034	76	FORD	GRAN	6W81L230606	222222221	1	3	3	3	3	010	1	4	4	2	1	2	0.034	SINCLAIR UNLD		2
6035	76	FORD	GRAN	6W82F304481	222222221	2	3	4	4	2	002	1	2	2	2	1	2	0.037	MOBIL UNLD		2
6036	76	FORD	TORI	6A31H162520	222222221	1	3	2	3	2	000	1	5	4	2	1	2	0.008	SINCLAIR UNLD		2
6037	76	MERC	COME	6K30L505237	222222221	1	2	1	2	1	001	3	3	4	2	1	2	0.006	SINCLAIR UNLD		2
6038	76	MERC	MONA	6W37L547427	222222221	1	3	3	4	3	035	1	2	2	2	1	2	0.027	SHELL UNLD		2
6039	76	OLDS	CUTL	3J57F6M419468	222222221	1	1	2	1	1	001	1	3	4	2	1	2	0.039	FINA UNLD		2
6040	76	OLDS	CUTL	3K57R6M107282	222222221	1	4	1	1	1	001	1	4	4	2	1	2	0.031	PHILLIPS UNLD		2
6041	76	OLDS	DELT	3N39T6X155208	222222221	1	4	1	1	1	001	1	4	4	2	1	2	0.031	SKELLY UNLD		2
6042	76	PLYM	DUST	VL29C6G180313	222222221	1	3	1	2	1	001	1	5	4	2	1	2	0.025	ZEPHYR UNLD		2
6043	76	PLYM	VOLA	HL29G6B318388	222222221	1	3	2	3	2	000	1	5	3	4	1	4	0.093	PHILLIPS LEADED		2
6044	76	PONT	LEMA	2D37F6A202474	222222221	1	3	2	1	1	001	1	2	2	2	1	2	0.032	BONAFIDE UNLD		2
6045	76	PONT	GRNP	2K57Z6A177156	222222221	1	2	1	1	1	001	1	4	4	2	1	2	0.021	SHELL UNLD		2
6046	76	DATS	B210	HLB210728237	222222221	1	3	3	3	5	010	1	3	4	2	2	1	0.100	ANY REG		2
6047	76	DATS	B210	HLB210786199	222222221	2	3	4	3	2	000	1	3	4	2	2	1	0.100	SITE REG		2
6048	76	TOYO	CORO	TE31126803	222222221	1	3	2	1	1	001	1	5	4	2	2	1	0.100	SHELL REG		2
6049	76	TOYO	CELI	RA29006488	222222221	1	3	3	3	2	082	1	5	4	2	2	1	1.000	MOBIL REG		2
6050	76	VOLK	SEDA	1162070449	222222221	2	3	2	3	2	041	1	5	4	2	2	1	0.100	STANDARD REG		2
6051	76	VOLK	RABB	1763098013	222222221	1	3	4	6	6	002	1	6	4	2	1	2	0.024	SINCLAIR UNLD		2
6201	76	AMC	STAW	A6A087H184553	222222221	1	3	4	3	5	010	1	4	4	2	1	2	0.040	VICKERS UNLD		2
6202	76	AMC	HORN	A6A057A252309	222222122	3	3	2	3	2	000	1	3	4	2	1	2	0.013	ZEPHYR UNLD		2
6203	76	AMC	MATA	A6A857H267583	222222221	1	3	3	3	2	000	1	2	2	2	1	2	0.023	SINCLAIR UNLD		2
6204	76	AMC	HORN	A65087E247052	222222221	1	3	3	3	5	010	1	5	3	5	1	2	0.012	MARS UNLD		2

APPENDIX C

LISTING OF TEST VEHICLE MAINTENANCE DATA

ST. LOUIS

VEH	YR	MAKE	MODL	VIN	PERFORM	S	O	T	L	U	C	R	W	D	P	V	N	PB	FUEL	MMT	M
6205	76	BUIC	CNTY	4D29C6H160077	222222221	1	3	1	2	1	001	1	5	4	2	1	2	0.062	SINCLAIR UNLD		2
6206	76	BUIC	LASA	4P39J6X113461	222211122	1	3	4	2	1	001	1	5	4	2	1	2	0.041	SUNOCO UNLD		2
6207	76	BUIC	REGA	4J57J6H173084	222222221	2	3	3	2	1	001	2	2	2	2	1	2	0.016	DERBY UNLD		2
6208	76	BUIC	STAW	4K35J6Z131746	222222221	1	3	2	3	3	070	1	3	4	2	1	2	0.056	SHELL UNLD		2
6209	76	BUIC	LESA	4P69J6X160789	222222221	1	3	1	1	1	001	1	2	2	2	1	2	0.016	PEP UNLD		2
6210	76	BUIC	SKYH	4S07C62702753	222222221	2	3	1	1	1	001	1	5	3	5	1	2	0.021	MOBIL UNLD		2
6211	76	BUIC	SKYL	4B69C6K143653	222222221	1	3	2	3	2	000	1	3	4	2	1	2	0.008	MR GAS UNLD		2
6212	76	CADI	SEVI	6S69R60523407	222222221	1	3	1	1	1	001	1	2	2	2	1	2	0.080	PHILLIPS UNLD		2
6213	76	CADI	FLEE	6B69S6Q266430	222222221	1	2	2	3	2	002	1	5	4	2	1	2	0.013	SHELL UNLD		2
6215	76	CADI	DEVI	6D47S6Q293741	122222222	2	3	3	3	3	050	1	5	4	2	1	2	0.040	PHILLIPS UNLD		2
6216	76	CHEV	CHET	1B08E6Y169635	222222221	1	3	4	3	3	029	1	5	3	5	1	2	0.008	SHELL UNLD		2
6217	76	CHEV	CAPR	1N69V6S102912	222222221	1	3	3	3	5	008	1	3	3	5	1	2	0.001	APCO UNLD		2
6218	76	CHEV	MONT	1H57U61447246	222222221	1	6	6	6	6	002	4	6	4	2	1	2	0.016	SUNOCO UNLD		2
6219	76	CHEV	STAW	1G35V6R486662	222222221	1	3	4	6	6	002	1	3	4	2	1	2	0.070	SINCLAIR UNLD		2
6220	76	CHEV	CAMA	1Q87D6N585648	222222221	1	3	3	3	2	055	1	5	4	2	1	2	0.023	PHILLIPS UNLD		2
6221	76	CHEV	STAW	1D35V6D478904	212222222	1	3	4	2	1	001	1	3	4	2	1	2	0.008	SONIC UNLD		2
6222	76	CHEV	CAMA	1Q87Q6N533218	222222221	1	3	3	3	2	064	1	3	4	2	1	2	0.006	SHELL UNLD		2
6223	76	CHEV	CAPR	1N39S6S149165	222222221	1	3	1	1	1	001	1	2	2	2	1	2	0.049	PHILLIPS 66 UNLD		2
6224	76	CHEV	MONT	1H57V6K430788	222222221	1	3	4	3	3	029	1	3	4	2	1	2	0.013	PHILLIPS UNLD		2
6225	76	CHEV	IMPA	1L39V6S104992	222122222	2	3	3	3	3	040	3	6	4	2	1	2	0.040	AMOCO UNLD		2
6226	76	CHEV	CAMA	1Q87Q6L528958	222222221	1	3	1	1	1	001	1	2	2	2	1	2	0.016	PHILLIPS UNLD		2
6227	76	CHEV	MONT	1H57V6K421346	222222221	1	3	2	4	2	002	1	4	4	2	1	2	0.017	MOBIL UNLD		2
6228	76	CHEV	VEGA	1V11B6U122328	222222221	1	2	1	2	1	001	1	5	4	2	1	2	0.074	VENTURE UNLD		2
6229	76	CHEV	MONZ	1R07B6C109850	222222221	1	3	6	6	6	002	1	2	2	2	1	2	0.008	SINCLAIR UNLD		2
6230	76	CHEV	MONT	1H57V6K420582	222222221	2	3	1	1	1	001	1	4	4	2	1	2	0.043	ZEPHYR UNLD		2
6231	76	CHEV	CAMA	1S87L6L519629	222222221	2	3	1	1	1	001	1	5	4	2	1	2	0.034	CLARK UNLD		2
6232	76	CHEV	CAMA	1S87Q6L525717	222222221	1	3	1	2	1	001	1	5	4	2	1	2	0.024	STANDARD UNLD		2
6233	76	CHEV	MALI	1D29V6R529369	222222221	1	1	1	1	1	001	1	5	4	2	1	2	0.039	VICKERS UNLD		2
6234	76	CHEV	NOVA	1Y69Q6K114310	222222221	1	3	1	1	1	001	1	5	4	2	1	2	0.040	SUNOCO UNLD		2
6235	76	CHEV	CHET	1B08E6Y211277	222222221	2	3	2	3	2	024	1	5	4	2	1	2	0.016	ZEPHYR UNLD		2
6236	76	CHEV	IMPA	1L47V6S153367	222222221	1	3	3	3	4	002	1	3	4	2	1	2	0.016	SHELL UNLD		2
6237	76	CHEV	MALI	1D37V6R482761	222222221	1	3	3	3	3	035	1	3	4	2	1	2	0.038	STANDARD UNLD		2
6238	76	CHEV	VEGA	1V15B6U207889	222222221	1	3	4	3	3	022	1	2	2	2	1	2	0.054	MARTIN UNLD		2
6239	76	CHEV	NOVA	1X69D6K1D6391	222222221	1	3	1	1	1	001	1	3	4	2	1	2	0.012	MOBIL UNLD		2
6240	76	CHRY	CORD	SS22G6R146977	222222221	1	3	3	3	2	002	1	4	4	2	1	2	0.041	PEP UNLD		2
6241	76	CHRY	NEWY	C543N6C165584	222222221	1	3	2	1	1	001	1	5	4	2	1	2	0.024	SHELL UNLD		2
6242	76	DODG	CHAR	XS22K6R105880	222222221	1	1	1	1	1	001	1	1	1	1	1	2	0.013	ZEPHYR UNLD		2
6243	76	DODG	MONA	DH41N6D159071	222222221	1	3	3	3	4	000	1	5	3	5	2	1	0.100	VICKERS REG		2
6244	76	DODG	ASPE	NP29C6B257807	222222221	1	3	2	1	1	001	1	5	4	5	1	2	0.028	SHELL UNLD		2
6245	76	DODG	MONA	DH41K6D207935	222222221	1	3	3	3	5	002	1	2	2	2	1	2	0.008	TEXACO UNLD		2
6246	76	DODG	STAW	NH45C6B453125	222222221	1	3	4	1	1	001	1	5	4	2	1	2	0.008	PEP UNLD		2
6247	76	DODG	ASPE	NH41C6F185373	222222221	1	3	3	3	2	040	1	5	3	3	1	2	0.017	SHELL UNLD		2
6248	76	FORD	STAW	6P76S131277	222222221	1	1	1	1	1	001	1	2	2	2	1	2	0.090	STANDARD UNLD		2
6249	76	FORD	ELIT	6G21H190832	222222122	1	3	1	1	1	001	1	3	4	2	1	2	0.038	MOTER UNLD		2
6250	76	FORD	MAVE	6K92T100562	222222221	1	3	4	3	3	068	1	2	2	2	1	2	0.071	MOBIL UNLD		2
6251	76	FORD	THUN	6Y87A125132	222222221	1	3	3	3	2	033	1	3	4	2	1	2	0.020	ZEPHYR UNLD		2
6252	76	FORD	MUST	6F02Y166836	222222221	1	3	3	4	5	007	1	4	4	2	1	2	0.055	TEXACO UNLD		2
6253	76	FORD	MAVE	6K92L192566	222222221	1	1	1	1	1	001	1	2	2	2	1	2	0.072	PHILLIPS UNLD		2
6254	76	FORD	GRAN	6W82F300225	222222221	1	3	1	1	1	001	1	2	2	2	1	2	0.023	MOBIL UNLD		2
6255	76	FORD	PINT	6X10Y175273	222222221	1	3	1	1	1	001	1	3	4	2	1	2	0.048	PHILLIPS UNLD		2

APPENDIX C

LISTING OF TEST VEHICLE MAINTENANCE DATA

ST. LOUIS

VEH	YR	MAKE	MODL	VIN	PERFORM	S	O	T	L	U	C	R	W	D	P	V	N	PB	FUEL	MMT	M
6256	76	FORD	ELIT	6G21H129435	222222221	1	3	4	3	3	023	1	3	4	2	1	2	0.031	SHELL UNLD		2
6257	76	FORD	STAW	6X12Y152199	222222221	1	1	1	1	1	001	1	2	2	2	1	2	0.008	FLEET UNLD		2
6258	76	FORD	GRAN	6E83L139664	222222221	2	3	1	1	1	001	1	5	4	2	1	2	0.009	MOBIL CLEAR		2
6259	76	FORD	PINT	6X10Y182558	222222221	1	3	3	3	2	070	1	4	4	2	1	2	0.006	FINA UNLD		2
6260	76	FORD	STAW	6P76S175288	222222212	1	3	1	1	1	001	1	4	4	2	1	2	0.017	SUNOCO UNLD		2
6261	76	FORD	LTD	6U63H164813	222222221	1	3	1	1	1	001	1	3	3	3	1	2	0.044	STANDARD UNLD		2
6262	76	FORD	THUN	6Y87A127201	222222221	2	3	3	3	2	000	1	5	3	3	1	2	0.100	MOBIL UNLD		2
6263	76	FORD	MUST	6F04Z168722	222222221	1	3	4	3	2	002	1	2	2	2	1	2	0.053	MOBIL UNLD		2
6264	76	FORD	ELIT	6G21S125126	222222221	3	3	1	1	1	001	1	5	4	2	1	2	0.024	ZEPHYR UNLD		2
6265	76	FORD	ELIT	6G21H230110	222222221	1	6	6	6	6	002	1	3	4	2	1	2	0.016	ZEPHYR UNLD		2
6266	76	FORD	GRAN	6W82F293531	222222221	1	3	1	1	1	001	1	4	4	2	1	2	0.034	MOBIL UNLD		2
6267	76	FORD	PINT	6X12Y177562	222222221	1	3	1	1	1	001	1	5	4	2	1	2	0.031	SHELL UNLD		2
6268	76	LINC	MRK4	6Y89A819546	222221222	3	3	3	3	2	050	1	5	3	3	1	2	0.019	SHELL UNLD		2
6270	76	MERC	MONG	6H10H538201	222222221	1	3	4	3	2	000	1	3	3	3	1	2	0.062	SINCLAIR UNLD		2
6271	76	MERC	MARQ	6Z63S531057	222222221	1	3	4	3	5	012	1	2	2	2	1	2	0.016	PHILLIPS UNLD		2
6272	76	MERC	COUG	6A93H539511	222222221	1	3	3	3	2	200	1	4	4	2	1	2	0.014	AMOCO UNLD		2
6273	76	MERC	STAW	6Z76S520142	222222221	1	3	2	3	2	002	1	4	4	2	1	2	0.011	SHELL UNLD		2
6274	76	MERC	MONA	6W34F578648	222222221	1	3	1	1	1	001	1	3	4	2	1	2	0.027	IMPERIAL UNLD		2
6275	76	OLDS	CUTL	3K57R6R178492	222222221	1	3	1	1	1	001	1	2	2	2	1	2	0.080	FINA UNLD		2
6276	76	OLDS	CUTL	3M57R6R179557	222222221	1	3	3	2	1	001	1	2	2	2	1	2	0.008	STANDARD UNLD		2
6277	76	OLDS	OMEG	3B69D6W139020	221222222	2	3	1	1	1	001	1	2	2	2	1	2	0.027	STANDARD NOLEAD		2
6279	76	OLDS	STAW	3R45T6X114150	222222221	1	3	3	3	3	045	1	5	4	2	1	2	0.015	STANDARD UNLD		2
6280	76	OLDS	CUTL	3M57R6R179573	222222221	1	3	3	3	2	002	1	2	2	2	1	2	0.013	STANDARD UNLD		2
6281	76	OLDS	CUTL	3J57R6R160100	222222221	1	3	1	1	1	001	1	5	3	5	1	2	0.074	SHELL UNLD		2
6282	76	OLDS	CUTL	3M57R6D181473	222222221	1	3	1	1	1	001	1	3	4	2	1	2	0.013	STANDARD UNLD		2
6283	76	OLDS	NINE	3V39T6M160815	222222221	1	3	1	2	1	001	3	2	2	2	1	2	0.100	PHILLIPS UNLD		2
6284	76	PLYM	VOLA	HP29G6B101533	212222222	3	3	1	1	1	001	1	5	3	4	1	2	0.029	SITE UNLD		2
6285	76	PLYM	STAW	HH45G6B279255	222222221	1	3	1	1	1	001	1	5	4	2	1	2	0.021	SINCLAIR UNLD		2
6286	76	PLYM	FURY	RL23G6A253225	222221222	1	1	1	1	1	001	1	3	4	2	1	2	0.024	MOBIL UNLD		2
6287	76	PLYM	VOLA	HP41C6F289983	222222221	3	3	1	1	1	001	1	5	4	2	1	2	0.038	HUDSON UNLD		2
6288	76	PLYM	STAW	PH46M6D112923	222222221	1	3	3	3	2	040	1	3	4	2	1	2	0.053	CONOCO UNLD		2
6289	76	PLYM	STAW	HH45C6B401189	222222221	1	3	1	1	1	001	1	5	4	2	1	2	0.017	DERBY UNLD		2
6290	76	PLYM	STAW	HL45C6B302021	122222222	1	3	1	1	1	001	1	3	3	3	1	2	0.065	VENTURE UNLD		2
6291	76	PONT	SUNB	2M27C6C110698	222222221	1	3	4	3	2	055	1	5	3	3	1	2	0.016	STANDARD UNLD		2
6292	76	PONT	BONN	2P47Z6P123366	222222221	1	3	4	3	5	006	1	5	4	2	1	2	0.016	STANDARD UNLD		2
6293	76	PONT	GRNP	2J57M6P262034	222222221	1	3	3	3	5	010	1	4	4	2	1	2	0.031	ZEPHYR UNLD		2
6294	76	PONT	LEMA	2D29F6P308332	222222221	1	1	1	1	1	001	1	4	4	2	1	2	0.024	STANDARD UNLD		2
6295	76	PONT	CATA	2L69W6X118240	222222221	1	3	3	3	3	050	1	4	4	2	1	2	0.039	STANDARD UNLD		2
6296	76	PONT	FIRE	2T87M6N565431	222222221	1	3	3	3	3	002	1	5	3	4	1	2	0.032	ZEPHYR UNLD		2
6297	76	PONT	GRNP	2J57M6A153513	222222221	1	3	3	2	1	001	1	1	1	1	1	2	0.021	TEXACO UNLD		2
6298	76	PONT	VENT	2Y69D6W112902	222222221	1	3	3	3	3	035	1	4	3	3	1	2	0.029	MOBIL UNLD		2
6299	76	CAPR	COUP	GAECRM32913	222222221	1	3	4	3	3	020	1	4	4	2	1	2	0.019	STANDARD UNLD		2
6300	76	DODG	COLT	6H41K65109861	222222221	1	3	1	1	1	001	1	3	3	3	2	1	0.100	MOBIL REG		2
6301	76	DATS	B210	HLB210913322	222222221	1	3	1	1	1	001	1	2	2	2	2	1	0.100	TEXAS REG		2
6302	76	DATS	STAW	JHL710903153	222222221	1	3	2	4	2	030	1	2	2	2	2	1	0.012	SUNOCO REG		2
6303	76	DATS	B210	HLB210833017	222222221	1	3	3	3	4	033	1	5	4	2	2	1	0.100	STANDARD REG		2
6304	76	FIAT	128	128A11992876	222222221	1	3	2	3	2	110	1	5	3	3	2	1	0.100	BONAFIDE REG		2
6305	76	FIAT	131	131A30189015	222222221	1	1	1	1	1	001	1	2	2	2	2	1	0.100	VICKERS REG		2
6306	76	HOND	CIVI	SBC4035192	222222221	1	3	1	1	1	001	1	2	2	2	2	1	0.028	SINCLAIR REG		2
6307	76	HOND	ACCO	SJE1005S88	222222221	1	3	3	3	2	060	1	3	4	2	2	1	1.000	TEXACO LEADED		2

APPENDIX C

LISTING OF TEST VEHICLE MAINTENANCE DATA

ST. LOUIS

VEH	YR	MAKE	MODL	VIN	PERFORM	S	O	T	L	U	C	R	W	D	P	V	N	PB	FUEL	MMT	M
6308	76	MAZD	RX4	LA23S142105	222222221	1	3	1	2	1	001	3	5	4	2	1	2	0.005	PEP UNLD		2
6309	76	TOYO	CORO	TE31124002	222222221	1	3	2	3	3	050	1	2	2	2	2	1	0.100	BONAFIDE REG		2
6310	76	TOYO	CORO	TE51520875	222222221	1	3	1	2	1	001	1	2	2	2	2	1	0.100	SHELL REG		2
6311	76	TOYO	CELI	RA29036359	222222221	1	2	2	3	2	085	1	3	4	2	2	1	0.016	PHILLIPS UNLD		2
6312	76	TOYO	CORO	TE31089998	222222221	1	3	4	3	2	002	1	2	2	2	2	1	0.100	PHILLIPS REG		2
6313	76	VOLK	RABB	1763133682	222222221	1	3	3	3	3	030	1	5	4	2	1	2	0.009	FINA UNLD		2
6314	76	VOLK	RABB	1763169362	222222221	2	3	2	3	2	002	1	5	4	2	1	2	0.026	FINA UNLD		2
6315	76	VOLK	RABB	1763098306	222222221	1	3	1	1	1	001	1	3	4	2	1	2	0.011	PHILLIPS UNLD		2
6316	76	VOLV	264G	26465E1018659	222222221	1	3	2	3	2	002	1	3	4	2	2	1	0.012	AMOCO REG		2
5052	75	AMC	GREM	A5C465A153144	122222222	1	3	4	4	5	002	1	5	3	5	1	2	0.028	DERBY UNLD		2
5053	75	BUIC	STAW	4F35J5H201555	222222221	1	3	1	2	1	001	1	2	2	2	1	2	0.085	VICKERS UNLD		2
5054	75	BUIC	ELEC	4V39T5H503872	222222221	1	3	4	6	6	002	1	3	4	2	1	2	0.039	SUNOCO UNLD		2
5055	75	CADI	DEVI	6D47S5Q171896	222222221	1	3	4	1	1	001	1	1	1	1	1	2	0.030	FINA UNLD		2
5056	75	CHEV	MONZ	1M27A5C252889	222222221	1	3	4	3	3	040	1	2	2	2	1	2	0.020	SITE UNLD		2
5057	75	CHEV	MONT	1H57H5K419794	222222221	1	3	3	3	3	020	1	4	4	2	1	2	0.020	TEXACO UNLD		2
5058	75	CHEV	MALI	1D2945R481549	222221222	1	3	4	4	3	030	2	2	2	2	1	2	0.016	SINCLAIR UNLD		2
5059	75	CHEV	STAW	1N45U5S166232	222222221	1	3	1	2	1	001	2	5	4	2	1	2	0.013	FINA UNLD		2
5060	75	CHEV	CAMA	1Q87D5N587512	222222122	1	4	2	4	3	036	1	4	4	2	1	2	0.022	TEXACO UNLD		2
5061	75	CHRY	CORD	SS22K5R324520	222222221	3	3	4	4	3	032	1	3	4	2	1	2	0.015	DERBY UNLD		2
5062	75	DODG	DART	LL29G5G196164	222222221	1	3	4	3	2	000	1	2	2	2	1	2	0.019	CLARK UNLD		2
5063	75	FORD	PINT	F5T11Y1311405	222222221	1	3	6	6	6	002	1	1	1	1	1	2	0.056	MOTER UNLD		2
5064	75	FORD	MAVE	5K92F105942	222222221	1	3	3	3	2	035	1	4	4	2	1	2	0.024	ZEPHER UNLD		2
5065	75	FORD	LTD	5B68S144455	222222221	1	3	3	3	5	010	1	5	4	2	1	2	0.019	CLARK UNLD		2
5066	75	FORD	GRAN	5W81L222186	122222222	3	3	4	4	5	002	1	5	3	5	1	2	0.012	MARS UNLD		2
5067	75	FORD	GRAN	5W82F231064	222222221	1	3	1	2	1	001	1	4	4	2	1	2	0.058	ANY UNLD		2
5068	75	MERC	MONG	5H07H553131	211212222	2	3	5	5	5	010	1	3	4	2	1	2	0.012	MOBIL UNLD		2
5069	75	OLDS	CUTL	3K57K5M245461	222222221	3	3	1	2	1	001	1	5	3	4	1	2	0.042	AMOCO UNLD		2
5070	75	OLDS	98	3V37T5M324928	222222221	1	3	1	2	1	001	3	3	4	2	1	2	0.018	DERBY UNLD		2
5071	75	PLYM	VALI	VL41C5B351032	222222221	3	3	3	3	3	031	1	5	3	3	1	2	0.032	STANDARD UNLD		2
5072	75	PLYM	VALI	VL41G5B252224	222222221	3	3	3	3	2	062	1	5	4	2	1	2	0.059	DERBY UNLD		2
5073	75	PONT	CATA	2L69R5P192321	222222221	1	3	3	3	3	030	1	5	3	5	1	2	0.006	MOBIL UNLD		2
5074	75	PONT	FIRE	2S87M5N518286	222222221	1	3	4	5	2	015	1	4	3	5	1	2	0.012	SHELL UNLD		2
5075	75	DATS	B210	HLB210617949	222222221	1	3	4	4	2	080	1	5	4	2	2	1	0.100	SINCLAIR REG		2
5076	75	TOYO	CELI	RA22062708	222222221	1	3	3	3	2	090	1	4	4	2	2	1	0.100	VICKERS REG		2
5077	75	TOYO	CORO	TE31075282	222212122	2	3	1	2	1	001	1	5	3	3	2	1	0.100	MARS REG		2
5078	75	VOLK	SCIR	5352013514	222221222	3	3	3	3	2	048	1	4	4	2	1	2	0.041	SINCLAIR UNLD		2
5317	75	AMC	MATA	A5A857H102623	222222221	1	3	3	3	3	055	1	5	4	2	1	2	0.009	MOBIL UNLD		2
5318	75	BUIC	SKYH	4S07C52103200	222222221	3	3	1	2	1	001	1	5	3	4	2	1	0.019	STANDARD UNLD		2
5320	75	CHEV	MONZ	1M27A5C247688	222222221	1	3	3	3	2	032	1	3	4	2	1	2	0.025	AMOCO UNLD		2
5321	75	CHEV	IMPA	1L69H5J198809	222222221	1	3	3	2	1	001	1	1	1	1	1	2	0.012	PHILIPS UNLD		2
5322	75	CHEV	STAW	1D35H5R504262	222222221	1	3	3	3	2	066	1	2	2	2	1	2	0.051	MOBIL UNLD		2
5323	75	CHEV	CAMA	1Q87H5N602916	222222221	1	3	4	3	3	015	1	5	3	5	1	2	0.017	SHELL UNLD		2
5324	75	CHEV	IMPA	1L47U5J101127	222222221	1	4	4	3	4	010	1	1	1	1	1	2	0.008	SINCLAIR UNLD		2
5325	75	DODG	DART	LL2965G112252	222222221	1	3	4	3	5	010	1	4	3	5	1	2	0.043	MOTOR UNLD		2
5326	75	FORD	MUST	5F02Y196792	222222221	1	3	3	3	5	010	1	4	4	2	1	2	0.062	MOBIL UNLD		2
5327	75	FORD	LTD	5U66S160344	222222221	1	3	4	4	5	002	1	5	4	2	1	2	0.027	CLARK UNLD		2
5328	75	FORD	LTD	5U68H155679	222221222	1	3	4	4	3	045	1	5	4	2	1	2	0.008	MOBIL UNLD		2
5329	75	LINC	MRK4	5Y89A878905	222222221	1	3	4	4	2	000	1	1	1	1	1	2	0.027	SHELL UNLD		2
5330	75	MERC	COUG	5A93H540653	222222221	1	3	3	3	3	015	1	5	3	4	1	2	0.054	STANDARD UNLD		2
5331	75	OLDS	CUTL	3G37F5M314209	222222221	1	3	4	4	5	015	1	4	4	2	1	2	0.008	ZEPHYR UNLD		2

APPENDIX C

LISTING OF TEST VEHICLE MAINTENANCE DATA

ST. LOUIS

VEH	YR	MAKE	MODL	VIN	PERFORM	S	O	T	L	U	C	R	W	D	P	V	N	PB	FUEL	MMT	M
5332	75	OLDS	CUTL	3J57K5M225910	222222221	1	3	1	2	1	001	1	3	3	3	1	2	0.050	MOBIL UNLD		2
5333	75	PLYM	FURY	RP23G5G198116	222222221	1	3	4	4	3	030	1	2	2	2	1	2	0.000	SITE UNLD		2
5334	75	PONT	GRNP	2K57S5A143365	222222221	1	3	4	4	3	035	1	3	4	2	1	2	0.016	STANDARD UNLD		2
5335	75	DATS	710	JHL710049573	222222221	1	3	4	3	2	035	1	3	4	2	2	1	0.100	MOTER LEADED		2
5336	75	FIAT	131	131A30077680	122222222	3	3	2	3	2	142	1	5	3	4	2	1	0.100	MOBIL REG		2
5337	75	HOND	CVCC	5GE1019265	222222221	1	3	4	4	2	085	1	3	3	5	2	1	1.000	ZEPHER LEADED		2
5338	75	MAZD	STAW	S124W163635	222222221	1	3	2	3	2	100	1	3	4	2	1	2	0.035	STANDARD UNLD		2
4080	74	AMC	AMBA	A4A857N413102	222122222	3	3	4	3	3	026	1	2	2	2	2	1		BONAFIDE REG		2
4081	74	BUIC	CNTY	4D37H4H196313	222222221	1	3	3	3	3	060	1	2	2	2	2	1		SHELL LEADED		2
4082	74	CADI	DEVI	6D49B4Q144490	222222221	1	3	3	3	3	030	1	1	1	1	2	1		STANDARD UNLD		2
4083	74	CHEV	VEGA	1V77B4U317126	222222221	1	3	4	3	3	025	1	2	2	2	2	1		STANDARD REG		2
4084	74	CHEV	CHEL	1C37H4R543830	222222221	1	3	3	3	5	012	1	5	4	2	2	1		VICKERS REG		2
4085	74	CHEV	NOVA	1X27D4K111836	222222221	1	3	3	3	3	010	1	3	4	2	2	1		CLARK REG		2
4086	74	CHEV	NOVA	1Y17H4K118216	222222221	1	3	4	4	3	030	1	2	2	2	2	1		EQUAL GAS REG		2
4087	74	CHEV	CHEL	1D29H4B443720	222222221	1	3	4	3	3	040	1	2	2	2	2	1		STANDARD REG		2
4088	74	CHEV	STAW	1L45U4S124644	222222212	1	3	4	3	4	030	1	1	1	1	2	1		VICKERS REG		2
4089	74	CHRY	NEWP	CL41M4C212643	222221222	1	3	3	3	5	010	1	5	4	2	2	1		STANDARD REG		2
4090	74	DODG	CHAR	WL21G4A285093	222222221	1	3	4	4	2	060	1	5	4	2	2	1		FINA REG		2
4091	74	FORD	PINT	4X10X296520	222222221	1	3	3	3	5	008	1	5	3	5	2	1		STANDARD REG		2
4092	74	FORD	TORI	4H27F190051	222222221	1	3	3	3	3	058	1	2	2	2	2	1		MARS REG		2
4093	74	FORD	PINT	4T11Y168700	222222221	1	4	3	4	3	080	1	1	1	1	2	1		MOBIL		2
4094	74	FORD	STAW	4U76S155360	222222221	1	3	4	3	3	040	1	2	2	2	2	1		FINA REG		2
4095	74	FORD	STAW	4H42H174294	222222221	1	3	3	3	5	015	2	1	1	1	2	1		PHILLIPS 66 REG		2
4096	74	MERC	MONT	4H07F586216	222222221	1	3	4	3	5	005	1	3	3	5	2	1		CLARK REG		2
4097	74	OLDS	CUTL	3J57K4R113798	222222221	1	3	3	3	3	034	1	3	4	2	2	1		MOBIL REG		2
4098	74	OLDS	STAW	3R45T4M257623	222222221	1	3	3	3	2	038	1	3	4	2	2	1		SHELL REG		2
4099	74	PLYM	SCAM	VH23G4G129593	212222222	1	3	5	4	3	020	1	4	4	2	2	1		PHILLIPS REG		2
4100	74	PLYM	DUST	VL29C4G286125	222222221	1	3	4	3	3	002	4	2	2	2	2	1		SUNOCO REG		2
4101	74	PONT	GRNP	2K57T4A125073	222222221	1	3	4	4	2	060	1	2	2	2	2	1		STANDARD REG		2
4102	74	DATS	710	JHL710804185	222222221	1	3	3	3	3	025	1	2	2	2	2	1		MOBIL LEADED		2
4103	74	TOYO	CORO	TE27120514	222222221	1	3	4	3	2	055	1	2	2	2	2	1		VICKERS REG		2
4104	74	TOYO	STAW	RT118015842	222222221	1	3	5	5	2	040	1	3	3	5	2	1		SINCLAIR REG		2
4105	74	VOLK	SEDA	1542294363	222222221	1	4	4	4	3	002	1	2	2	2	2	1		STANDARD REG		2
4106	74	VOLK	SEDA	11342383574	222222221	1	3	4	4	3	045	1	5	4	2	2	1		SITE REG		2
4339	74	AMC	HORN	A4A087A272379	222222221	1	3	3	3	5	010	1	5	4	2	2	1		PHILLIPS REG		2
4340	74	BUIC	REGA	4J57J4H120747	222222221	1	3	4	3	3	040	1	2	2	2	2	1		SHELL REG		2
4341	74	BUIC	RIVI	4Y87U4H465786	222222221	1	3	4	4	4	045	1	5	4	2	2	1		PHILLIPS REG		2
4342	74	CHEV	CHEL	1D37H41469387	222222221	1	3	3	3	2	030	1	5	4	2	2	1		MOBIL UNLD		2
4343	74	CHEV	MONT	1H57H41604376	222222221	1	3	3	3	2	002	1	2	2	2	2	1		MOBIL REG		2
4344	74	CHEV	CHEL	1D37H4R472543	222222221	1	3	2	3	3	030	1	3	4	2	2	1		SINCLAIR REG		2
4345	74	CHEV	STAW	1L45U4S111865	222222221	1	3	4	4	3	033	1	1	1	1	2	1		SHELL SUPER REG		2
4346	74	CHEV	VEGA	1V11B4U272525	222222221	1	3	4	4	3	020	1	2	2	2	2	1		BONAFIDE REG		2
4347	74	DODG	DART	LL29C4G151599	222222221	1	3	3	3	5	010	1	3	4	2	2	1		ZEPHYR REG		2
4348	74	DODG	DART	LH41G4R291638	211222122	1	2	4	4	2	045	1	5	4	2	2	1		MARS REG		2
4349	74	FORD	TORI	4G21H214666	222222221	1	3	3	3	5	010	1	5	4	2	2	1		STANDARD REG		2
4350	74	FORD	GALA	4G54S147173	222222221	1	3	4	4	5	011	1	4	4	2	2	1		SINCLAIR DINO RG		1
4351	74	FORD	LTD	4G63S112449	221222222	1	3	4	4	3	065	1	3	4	2	2	1		STANDARD REG		2
4352	74	FORD	MUST	4F03Y127115	222222221	1	3	4	3	5	020	1	1	1	1	2	1		STANDARD REG		2
4353	74	LINC	MRK4	4Y89A857575	222222221	1	3	3	3	2	000	3	2	2	2	2	1		ZEPHYR REG		2
4354	74	MERC	MONG	4H11H590397	122222222	1	3	3	3	3	021	1	5	4	2	2	1		SITE REG		2

APPENDIX C

LISTING OF TEST VEHICLE MAINTENANCE DATA

ST. LOUIS

VEH	YR	MAKE	MODL	VIN	PERFORM	S	O	T	L	U	C	R	W	D	P	V	N	PB	FUEL	MMT	M
4355	74	OLDS	CUTL	3J57K4M339852	121222222	3	3	3	3	5	012	1	1	1	1	2	1		ZEPHYR REG		1
4356	74	PLYM	FRY3	PH41K4D246193	122222222	1	3	3	3	5	015	1	2	2	2	2	1		SHELL REG		2
4357	74	PONT	BONN	2N57R4X136187	222222221	1	3	4	4	5	012	1	5	3	5	2	1		SHELL REG		2
4358	74	PONT	LEMA	2G37M4A183984	222222221	2	3	3	3	3	164	1	3	4	2	2	1		STANDARD REG		2
4359	74	CAPR	SPOR	CAECPS56856	222222221	1	3	4	3	4	035	1	5	4	2	2	1		STANDARD REG		2
4360	74	DATS	B210	HLB210492005	222222221	1	3	2	5	2	050	1	3	4	2	2	1		MOBIL REG		2
4361	74	MAZD	STAW	LA23W112800	222222221	1	3	4	3	5	005	1	4	4	2	2	1		SUNOCO UNLD		2
3107	73	AMC	GREM	A3E465E405822	212212222	3	3	3	3	2	040	1	5	3	5	2	1		STANDARD REG		2
3108	73	BUIC	CNTR	4P67T3X190607	222222221	1	3	3	3	3	035	1	2	2	2	2	1		MOBIL REG		2
3109	73	BUIC	CNTY	4H57H3H146183	222222221	1	3	3	3	5	015	1	3	4	2	2	1		SHELL REG		2
3110	73	CADI	DEVI	6D47330228290	222222221	1	3	3	3	5	015	1	1	1	1	2	1		SINCLAIR REG		2
3111	73	CHEV	VEGA	1V77B3U484796	222222221	3	3	3	3	5	000	2	4	4	2	2	1		STANDARD REG		2
3112	73	CHEV	MONT	1H57H3K425295	222222221	1	2	4	5	5	025	3	3	4	2	2	1		SHELL REG		2
3113	73	CHEV	CAMA	1Q87H3N187195	222222221	1	3	3	3	3	002	1	2	2	2	2	1		SHELL REG		2
3114	73	CHEV	IMPA	1L69H3S161918	222222221	1	3	4	3	3	035	1	1	1	1	2	1		ZEPHYR REG		2
3115	73	CHEV	IMPA	1L69H3S183100	222222221	1	3	4	4	3	040	2	2	2	2	2	1		ZEPHYR REG		2
3116	73	DODG	DART	LH41C3R324894	222222122	1	3	3	3	5	002	1	2	2	2	2	1		SHELL REG		2
3117	73	FORD	PINT	3X12X333479	222222221	1	3	4	3	3	038	3	3	4	2	2	1		BONAFIDE LEADED		2
3118	73	FORD	TORI	3A38H102509	222222221	3	3	3	3	4	040	2	5	3	5	2	1		MOBIL REG		2
3119	73	FORD	MUST	3F03F155360	222222221	1	6	3	3	3	002	2	1	1	1	2	1		SHELL REG		2
3120	73	FORD	TORI	3A30H273428	221122222	3	3	4	3	3	050	1	2	2	2	2	1		FINA REG		2
3121	73	FORD	STAW	3G76S200966	222222221	1	3	3	3	3	050	3	3	2	2	2	1		PHILLIPS 66 REG		2
3122	73	MERC	MONG	3H11S554825	122222222	1	3	4	4	3	014	1	1	1	1	2	1		STANDARD REG		2
3123	73	OLDS	TORO	3Y57W3M735136	222222221	1	3	4	3	3	035	1	2	2	2	2	1		VICKERS PREM		2
3124	73	OLDS	CUTL	3J57K3M168391	222122221	2	6	6	3	2	002	4	6	4	2	2	1		DERBY PREM		3
3125	73	PLYM	SATE	RP23G3G122398	222222221	1	3	3	3	2	045	1	2	2	2	2	1		CONOCO PREM		2
3126	73	PLYM	VALI	VL41C3R137948	222222221	1	3	4	4	3	050	1	3	3	5	2	1		TEXAS REG		2
3127	73	PONT	GRNV	2P47W3X580804	222222212	1	3	4	3	3	035	1	4	4	2	2	1		SHELL REG		2
3128	73	PONT	LEMA	2F37M3A118493	222222221	1	3	4	4	3	002	1	1	1	1	2	1		SHELL REG		2
3129	73	DATS	STAW	PL610823387	222222221	1	3	3	3	2	035	1	5	4	2	2	1		SUNOCO REG		2
3130	73	OPEL	STAW	0L15NC9764669	222222221	1	3	3	4	3	030	1	1	1	1	2	1		ZEPHYR REG		2
3131	73	TOYO	CARI	TA12704291	222222221	1	3	3	3	3	035	2	4	4	2	2	1		MOBIL REG		2
3132	73	VOLK	SEDA	1132040113	222222221	1	4	3	4	3	030	3	2	2	2	2	1		MOBIL REG		2
3133	73	VOLK	SEDA	1132486552	222222221	1	4	4	3	3	030	1	1	1	1	2	1		SINCLAIR REG		2
3362	73	BUIC	CNTY	4D37H3H204955	222222221	1	3	4	3	5	012	1	4	4	2	2	1		SINCLAIR REG		2
3363	73	BUIC	RIVE	4Y87U3H483064	222222221	1	3	3	3	6	050	1	1	1	1	2	1		ZEPHYR REG		2
3364	73	CHEV	STAW	1L35R3S100808	222222221	1	3	3	3	5	002	1	1	1	1	2	1		CLARK REG		2
3365	73	CHEV	VEGA	1V77B3U474971	122222122	1	3	4	4	2	025	1	2	2	2	2	1		MARS REG		2
3366	73	CHEV	NOVA	1X27D3L171498	222222221	1	3	4	3	3	050	1	2	2	2	2	1		SHELL REG		2
3367	73	CHEV	IMPA	1L39H3D228094	122222222	1	3	3	4	3	055	1	1	1	1	2	1		PHILLIPS 66 REG		2
3368	73	CHEV	CAMA	1Q87F3N100220	122222222	1	3	3	3	5	005	1	1	1	1	2	1		MOTER REG		2
3369	73	CHEV	STAW	1N35X3S105811	221222222	1	3	3	3	3	061	1	1	1	1	2	1		SUPER SHELL		2
3370	73	CHRY	NEWP	CL41M3C205351	122222222	2	3	3	3	3	002	1	5	3	5	2	1		STANDARD REG		2
3371	73	DODG	CHAR	WP29G3G248751	222222221	1	3	4	3	5	012	1	5	3	5	2	1		BONAFIDE REG		2
3372	73	DODG	STAW	DM46K3D131867	222222221	1	6	4	6	6	002	1	6	4	2	2	1		MARS REG		2
3373	73	FORD	PINT	3X11X252697	222222221	1	3	3	3	5	012	1	2	2	2	2	1		SINCLAIR REG		2
3374	73	FORD	TORI	3A30H119913	222222221	1	3	3	3	3	025	1	2	2	2	2	1		ANY REG		2
3375	73	FORD	STAW	3G765276141	222222221	1	3	3	3	5	002	1	4	3	5	2	1		SKELLY REG		2
3376	73	FORD	STAW	3G76S143344	222222221	3	3	3	4	3	052	1	2	2	2	2	1		MOBIL REG		2
3377	73	MERC	MONG	3H04F636332	222222221	1	3	4	4	5	002	1	3	4	2	2	1		ZEPHYR REG		2

APPENDIX C

LISTING OF TEST VEHICLE MAINTENANCE DATA

ST. LOUIS

VEH	YR	MAKE	MODL	VIN	PERFORM	S	O	T	L	U	C	R	W	D	P	V	N	PB	FUEL	MMT	M
3378	73	OLDS	DELT	3N69H3M292373	122222122	1	3	4	3	5	010	1	3	4	2	2	1		MARTIN REG		2
3379	73	OLDS	NNTY	3X39U3M355278	222222221	1	3	3	3	3	050	1	4	4	2	2	1		STANDARD PREM		2
3380	73	PLYM	FRY3	PH23K3F258633	222222221	1	3	3	3	3	050	1	4	2	2	2	1		STANDARD REG		2
3381	73	PONT	VENT	2Y27M3L113253	222222221	1	3	4	3	4	035	1	5	3	5	2	1		SHELL REG		2
3382	73	PONT	GRNV	2P67W3P129174	222222221	1	3	4	3	5	015	1	1	1	1	2	1		TEXACO REG		2
3383	73	MERC	CAPR	GAECNJ967244	222222212	1	3	4	3	3	027	1	2	2	2	2	1		STANDARD REG		2
3384	73	MAZD	RX3	S124A126178	222222221	1	3	3	3	2	100	1	3	3	3	2	1		SHELL REG		2
2134	72	AMC	MATA	A2A157A327761	222222221	1	3	4	3	3	055	1	4	3	5	2	1		SINCLAIR REG		2
2135	72	BUIC	ELEC	4V39T2H468816	222222221	1	3	4	3	2	002	1	3	4	2	2	1		SHELL REG		2
2136	72	CADI	CALA	6C47R20170497	222222221	1	3	3	3	3	002	1	2	2	2	2	1		MOBIL REG		2
2137	72	CHEV	VEGA	1V77B2U226411	222222221	1	6	3	6	3	015	1	2	2	2	2	1		ZEPHYR REG		2
2138	72	CHEV	STAW	1H46H2R605981	222222221	1	3	4	3	3	045	1	2	2	2	2	1		PHILLIPS 66 REG		2
2139	72	CHEV	CHEL	1D69H2K553960	222222221	1	3	4	3	3	028	1	1	1	1	2	1		ZEPHYR REG		2
2140	72	CHEV	CHEL	1C37F2K645679	122222222	1	3	3	3	3	025	1	5	4	2	2	1		SINCLAIR REG		2
2141	72	CHEV	STAW	1M45H2J153505	222222221	1	3	4	3	3	050	1	1	1	1	2	1		CLARK REG		2
2142	72	CHEV	CAPR	1N47R2S163536	222122222	1	6	6	6	5	002	1	1	1	1	2	1		MARS REG		2
2143	72	DODG	CHAR	WP29G2G142579	222222221	1	3	4	4	5	010	1	5	4	2	2	1		MARS REG		2
2144	72	FORD	PINT	2T11X107148	222222221	1	3	1	6	2	002	1	1	1	1	2	1		MOTER REG		2
2145	72	FORD	TORI	2H35H166028	222222221	1	3	3	4	3	002	1	1	1	1	2	1		SHELL PREM		2
2146	72	FORD	MAVE	2K91T119624	222222221	1	3	4	5	5	010	1	1	1	1	2	1		PEP REG		2
2147	72	FORD	STAW	2G76S270823	222222221	1	3	3	3	3	070	1	2	2	2	2	1		SHELL REG		2
2148	72	FORD	LTD	2G66S242150	222222221	1	3	4	4	3	040	1	2	2	2	2	1		STANDARD REG		2
2149	72	MERC	MONR	2Z46S555631	221222122	2	3	3	2	5	016	1	4	3	5	2	1		MARS		2
2150	72	OLDS	CUTL	3G87M2R130736	222222221	1	3	4	4	3	040	1	3	4	2	2	1		MOBIL REG		2
2151	72	PLYM	DUST	VL29C2B274539	222222221	1	3	4	3	3	025	1	1	1	1	2	1		SHELL REG		2
2152	72	PLYM	FRY3	PH43K2D273787	122222222	1	3	3	3	3	015	1	1	1	1	2	1		SUNOCO 190		2
2153	72	PONT	GRNV	2P47Y2P360524	222222221	2	3	3	3	3	040	1	1	1	1	2	1		MARS REG		2
2154	72	PONT	FIRE	2T87M2N525169	222222221	1	3	3	6	5	010	1	1	1	1	2	1		PHILLIPS 66 REG		2
2155	72	DATS	510	PL510300114	222222221	1	3	4	5	2	056	1	5	3	5	2	1		SINCLAIR REG		2
2156	72	TOYO	CELI	RA20008058	222222221	1	3	4	3	3	030	1	2	2	2	2	1		STANDARD REG		2
2157	72	VOLK	SEDA	1122377831	222222221	1	3	4	3	3	002	1	2	2	2	2	1		STANDARD REG		2
2158	72	VOLK	SEDA	1122796120	222222221	1	4	4	4	3	036	1	2	2	2	2	1		ONYX REG		2
2385	72	BUIC	STAW	4F36H2H150831	222222122	1	3	4	3	5	010	1	3	4	2	2	1		SINCLAIR REG		2
2386	72	BUIC	LESA	4N69H2X160767	222222221	1	3	4	4	3	040	1	2	2	2	2	1		SHELL REG		2
2387	72	CHEV	VEGA	1V77B2U397002	222222221	1	3	4	3	2	010	1	1	1	1	2	1		HUDSON REG		2
2388	72	CHEV	NOVA	1X69D2W301255	112222222	1	3	3	3	3	002	1	2	2	2	2	1		MARS UNLD		2
2389	72	CHEV	MALI	1D37H2K620968	222222221	1	4	4	4	5	015	1	1	1	1	2	1		PHILLIPS REG		2
2390	72	CHEV	IMPA	1M39H2J278341	222222221	1	3	3	3	3	030	1	4	4	2	2	1		SHELL REG		2
2391	72	CHEV	IMPA	1M69R2S113466	222222221	1	3	4	3	5	010	2	1	1	1	2	1		SITE REG		2
2392	72	CHRY	NEWP	CL41M2C319028	122222222	1	3	4	3	3	032	1	3	3	5	2	1		STANDARD REG		2
2393	72	DODG	DEMO	LL29C2B119948	222222221	1	3	4	4	3	030	1	2	2	2	2	1		FINA REG		2
2394	72	FORD	PINT	2X11X282992	222222221	3	3	3	3	3	002	1	3	4	2	2	1		BONAFIDE REG		2
2395	72	FORD	TORI	2A31F310811	222222221	1	3	3	3	5	000	1	1	1	1	2	1		SHELL REG		2
2396	72	FORD	MUST	2F01H149632	222222221	1	3	4	4	2	002	1	2	2	2	2	1		SHELL REG		2
2397	72	FORD	GALA	2G54N243289	222222221	1	3	4	3	5	010	1	2	2	2	2	1		SHELL PREM		2
2398	72	LINC	MRK4	2Y89A817610	222222221	1	3	6	2	6	002	3	1	1	1	2	1		FINA PREM		2
2399	72	MERC	MONG	2H04F587568	222222221	1	3	4	3	3	050	1	1	1	1	2	1		ZEPHYR REG		2
2400	72	OLDS	CUTL	3J57K2R126310	222222221	1	2	3	4	5	010	1	2	2	2	2	1		SHELL REG OR PRM		2
2401	72	OLDS	STAW	3R45T2M576807	222222221	1	3	4	4	3	002	1	6	4	2	2	1		MOTER REG		2
2402	72	PLYM	SATE	RH41G2G148659	222222221	1	3	3	3	3	002	1	2	2	2	2	1		CHAPLIN REG		2

APPENDIX C

LISTING OF TEST VEHICLE MAINTENANCE DATA

ST. LOUIS

VEH	YR	MAKE	MODL	VIN	PERFORM	S	O	T	L	U	C	R	W	D	P	V	N	PB	FUEL	MMT	M
2403	72	PONT	STAW	2L35R2X321348	222222221	1	3	3	3	5	010	1	3	4	2	2	1		PHILLIPS REG		2
2404	72	CAPR	COUP	GAECLU02172	222222221	1	4	4	4	2	020	1	4	3	5	2	1		SINCLAIR REG		2
1159	71	BUIC	RIVE	494871H923985	222222221	1	3	3	3	3	028	1	2	2	2	2	1		TEXACO REG		2
1160	71	BUIC	SKYL	444691H111843	221222222	1	4	4	3	5	015	2	1	1	1	2	1		SINCLAIR REG		2
1161	71	CHEV	VEGA	141111U181454	222222221	1	3	4	4	3	021	1	3	3	5	2	1		SHELL REG		2
1162	71	CHEV	CHEL	136671K173611	222222221	1	3	4	4	2	040	1	2	2	2	2	1		MOBIL REG		2
1163	71	CHEV	NOVA	113691W327116	222222122	1	3	3	3	3	002	1	2	2	2	2	1		SHELL REG		2
1164	71	CHEV	IMPA	164571S186513	222222221	1	3	3	3	3	035	1	3	4	2	2	1		SHELL REG		2
1165	71	CHEV	IMPA	1643915233251	222222221	1	3	4	4	3	035	1	5	4	2	2	1		PHILLIPS REG		2
1166	71	CHRY	NEWP	CL23L1C271629	222222221	1	3	3	3	3	040	1	1	1	1	2	1		SHELL REG		2
1167	71	DODG	CHAR	WH23G1G237315	222222221	1	3	4	4	5	010	2	2	2	2	2	1		ZEPHYR REG		2
1168	71	FORD	PINT	1X10X294097	222222221	1	3	4	4	5	005	1	2	2	2	2	1		SKELLY REG		2
1169	71	FORD	TORI	1A321299617	222222221	1	3	3	3	3	050	1	2	2	2	2	1		STANDARD REG		2
1170	71	FORD	MAVE	1K91T225220	211222222	1	3	4	3	5	015	1	2	2	2	2	1		STANDARD REG		2
1171	71	FORD	GALA	1G58H197383	222222221	1	3	3	3	5	020	1	4	4	2	2	1		MOTOR PREM		2
1172	71	FORD	STAW	1W76S150574	222222221	1	3	3	3	5	006	1	2	2	2	2	1		SINCLAIR REG		2
1173	71	MERC	COUG	1F93H540006	222222221	1	3	4	2	3	030	1	2	2	2	2	1		CLARK REG		2
1174	71	OLDS	CUTL	342391R110385	222222221	1	3	4	3	5	010	1	1	1	1	2	1		SKELLY REG		2
1175	71	PLYM	DUST	VL29C1B292639	222222221	1	3	3	3	3	002	1	6	2	2	2	1		SEARS REG		2
1176	71	PONT	CATA	252691P332431	222222221	1	3	3	3	3	023	1	1	1	1	2	1		VICKERS REG		2
1177	71	PONT	LEMA	237371P159373	122222222	1	3	3	4	5	010	1	2	2	2	2	1		STANDARD REG		2
1178	71	DATS	B110	LB110T873943	222222221	1	3	4	3	5	007	4	1	1	1	2	1		PHILLIPS 66		2
1179	71	TOYO	CORO	RT83069169	122222222	1	3	4	4	2	040	1	4	3	5	2	1		STANDARD REG		2
1180	71	VOLK	SEDA	1112887205	222222221	1	3	3	3	3	035	1	3	4	2	2	1		STANDARD REG		2
1405	71	AMC	MATA	A1A197H152308	222222221	1	3	4	3	5	010	1	1	1	1	2	1		FINA PREM		2
1406	71	BUIC	ELEC	484391H421553	222222221	1	3	3	3	5	018	1	3	4	2	2	1		MOBIL REG		2
1407	71	CADI	DEVI	6834910188715	222222221	1	3	4	3	3	052	1	3	4	2	2	1		STANDARD REG		2
1408	71	CHEV	MONT	138571K206687	222222221	1	3	3	3	3	035	1	2	2	2	2	1		MOBIL REG		2
1409	71	CHEV	CHEL	134691K122865	122222222	1	3	4	3	5	012	1	1	1	1	2	1		MARS REG		2
1410	71	CHEV	CHEL	136371R185188	222222221	1	3	4	3	5	020	1	2	2	2	2	1		STANDARD REG		2
1411	71	CHEV	IMPA	164471S107279	222222221	1	3	4	3	3	050	1	1	1	1	2	1		SHELL REG		2
1412	71	DODG	DART	LH23C1R197728	222222221	1	3	3	3	5	015	1	1	1	1	2	1		TEXAS DISCOUNT R		2
1413	71	FORD	MUST	1F01F228710	222222221	1	3	3	3	3	020	1	1	1	1	2	1		FLEET REG		2
1414	71	FORD	TORI	1A33H115435	222222221	1	3	3	3	3	020	1	1	1	1	2	1		ZEPHYER REG		2
1415	71	FORD	LTD	1C63H112549	222222221	1	3	4	3	3	002	1	2	2	2	2	1		MARS REG		2
1416	71	MERC	MONR	1Z72S562613	222222221	1	3	3	3	5	012	1	3	4	2	2	1		MARS REG		2
1417	71	OLDS	CUTL	342671M153931	222222122	1	3	4	3	4	010	1	1	1	1	2	1		MOBIL REG		2
1418	71	OLDS	CUTL	342571M173088	122222222	1	3	4	4	3	060	1	1	1	1	2	1		PHILLIPS 66 REG		2
1419	71	PLYM	DUST	VL29G1B147737	221222222	1	2	3	3	4	030	1	1	1	1	2	1		ZEPHYR REG		2
1420	71	PLYM	STAW	PM46K1D326399	122222222	3	3	3	3	4	060	2	2	2	2	2	1		SHELL REG		2
1421	71	PONT	CATA	252571P357491	222222122	1	3	4	4	5	012	1	2	2	2	2	1		PHILLIPS 66 REG		2
1422	71	VOLK	SEDA	1112024566	222222221	1	3	4	3	2	045	1	1	1	1	2	1		BIRITE REG		2
0181	70	AMC	JAVE	A05795E200512	222222221	1	3	4	4	5	009	1	3	4	2	2	1		SINCLAIR REG		2
0182	70	BUIC	LESA	464690X113057	222222221	1	3	4	4	3	002	1	2	2	2	2	1		SHELL PREM		2
0183	70	CHEV	NOVA	113690W235743	222222221	1	3	3	3	3	026	1	4	4	2	2	1		SINCLAIR REG		2
0184	70	CHEV	CHEL	134370K195926	222222221	1	3	4	3	5	012	3	4	4	2	2	1		VICKERS REG		2
0185	70	CHEV	CHEL	136370K220713	222222221	1	3	4	3	4	002	1	2	2	2	2	1		STANDARD REG		2
0186	70	CHEV	IMPA	164470S129171	222222221	1	3	5	3	3	020	1	4	4	2	2	1		STANDARD PREM		2
0187	70	CHEV	IMPA	164390S219124	222222221	1	3	3	3	5	012	1	1	1	1	2	1		STANDARD REG		2
0188	70	DODG	CORO	WL41C0G120750	222222221	3	3	4	3	2	002	1	3	4	2	2	1		CONOCO REG		2

APPENDIX C

LISTING OF TEST VEHICLE MAINTENANCE DATA

ST. LOUIS

VEH	YR	MAKE	MODL	VIN	PERFORM	S	O	T	L	U	C	R	W	D	P	V	N	PB	FUEL	MMT	M
0189	70	FORD	MUST	0F01F148676	222222221	1	3	3	3	5	020	1	1	1	1	2	1		BONAFIDE REG		2
0190	70	FORD	STAW	0A40F269776	222222221	1	3	3	4	5	012	1	5	4	2	2	1		MOTER REG		2
0191	70	FORD	LTD	0G62H129073	222222221	3	3	3	3	3	025	1	1	1	1	2	1		CLARK REG		2
0192	70	FORD	LTD	0G64H204497	222222122	1	3	4	4	5	008	1	5	3	5	2	1		SHELL PREM		2
0193	70	MERC	MARQ	0Z68N584347	222222221	1	3	5	5	3	040	1	3	4	2	2	1		ZEPHYR PREM		2
0194	70	OLDS	STAW	336350M382122	222222221	1	3	3	3	3	025	1	3	4	2	2	1		MOTER REG		2
0195	70	PLYM	STAW	PH46L0D274897	222222221	1	3	4	3	5	002	2	3	4	2	2	1		MOBIL PREM		2
0196	70	PLYM	DUST	VL29G0B333413	222222221	2	3	4	3	3	030	1	3	4	2	2	1		PHILLIPS 66 REG		2
0197	70	PONT	LEMA	2353907125213	222222221	1	6	4	4	3	025	3	1	1	1	2	1		VICKERS REG		2
0198	70	DATS	510	PL510154094	222222122	1	2	3	3	5	012	2	1	1	1	2	1		GULF REG		2
0200	70	VOLK	SEDA	1102690970	222222221	1	3	4	3	2	045	1	1	1	1	2	1		STANDARD REG		2
0423	70	BUIC	SKYL	435370H278583	222222221	1	3	4	3	3	025	1	3	4	2	2	1		SITE REG		2
0424	70	BUIC	SKYL	444370K116097	222222221	1	3	4	4	5	002	1	5	4	2	2	1		MARTIN REG		2
0425	70	CADI	DEVI	F0167529	222222221	1	3	4	4	3	002	3	1	1	1	2	1		SHELL PREM		2
0426	70	CHEV	CAMA	124870L500972	222222221	3	3	2	3	5	004	1	4	4	2	2	1		PEP REG		2
0427	70	CHEV	STAW	164360S230982	222222221	1	3	4	3	5	012	1	2	2	2	2	1		ZEPHYER REG		2
0428	70	CHEV	IMPA	164470S227617	222222221	1	3	4	4	3	025	1	3	4	2	2	1		TEXAS REG		2
0429	70	CHRY	STAW	CP45L0C166235	222222221	1	3	3	3	3	035	1	2	2	2	2	1		ZEPHYR REG		2
0430	70	DODG	CHAR	XP29G0G198990	222222221	1	3	3	3	5	010	1	1	1	1	2	1		VICKERS PREM		2
0431	70	FORD	MAVE	0K91T141786	222222221	1	3	3	3	2	034	1	1	1	1	2	1		ZEPHYR REG		2
0432	70	FORD	GALA	0G54H226729	222222221	1	3	3	3	5	012	1	1	1	1	2	1		MARS PREM		2
0433	70	FORD	LTD	0G66Y138293	222222221	1	3	3	3	5	010	1	5	4	2	2	1		TEXAS REG		2
0434	70	OLDS	DELT	354690X135762	222222221	1	3	3	3	5	012	1	2	2	2	2	1		STANDARD REG		2
0435	70	PLYM	SATE	RH41G0A228621	222222221	1	3	4	3	2	029	1	1	1	1	2	1		SINCLAIR REG		2
0436	70	PONT	GRNP	276570P273131	222222122	1	3	3	3	5	020	1	5	3	5	2	1		SUNOCO 260		2
0437	70	VOLK	SEDA	1102597355	222222221	1	3	3	3	3	002	1	1	1	1	2	1		MOTOR REG		2
9438	69	AMC	RAMB	A9S060A193949	222222221	1	2	3	2	1	001	1	1	1	1	2	1		STANDARD REG		2
9439	69	BUIC	WILD	464399X170806	222222221	1	3	1	2	1	001	1	1	1	1	2	1		SHELL REG		2
9440	69	BUIC	SPEC	433699K116902	222222221	1	2	4	3	5	002	1	1	1	1	2	1		MARINE REG		2
9441	69	CADI	DEVI	6834989156596	122222222	1	3	4	4	3	040	1	1	1	1	2	1		ZEPHYR PREM		2
9442	69	CHEV	NOVA	114279W506588	222222221	1	3	3	4	3	002	1	4	4	2	2	1		MOTOR PREM		2
9443	69	CHEV	IMPA	164379S057814	222222221	1	4	4	4	3	025	1	1	1	1	2	1		SUNOCO REG		2
9444	69	CHEV	CAMA	124379N661977	222222221	1	3	3	6	5	012	1	1	1	1	2	1		PHILLIPS 66 REG		2
9445	69	CHEV	IMPA	164479J257207	222222221	1	3	4	3	4	045	3	1	1	1	2	1		TEXAS DISCOUNT R		2
9446	69	CHEV	ELCA	136809K458107	222222221	1	3	4	3	5	020	1	2	2	2	2	1		ZEPHYR REG		2
9447	69	CHEV	NOVA	113279W491163	222222221	1	3	4	3	3	040	1	3	4	2	2	1		STANDARD PREM		2
9448	69	CHEV	BELA	156699S105438	222222221	1	3	3	3	3	002	1	1	1	1	2	1		SHELL REG		2
9449	69	CHRY	NEWP	CE41G9C257139	222221222	2	3	3	3	3	050	1	5	4	2	2	1		PHILLIPS 66 REG		2
9450	69	DODG	POLA	DL43F9K205048	222222221	1	3	4	4	3	040	1	1	1	1	2	1		MARS REG		2
9451	69	FORD	LTD	9G62Y156201	222222221	1	3	4	3	3	030	1	4	4	2	2	1		MARS LEADED		2
9452	69	FORD	FALC	9K10F208244	212222222	1	3	4	3	5	010	1	1	1	1	2	1		MASCOT REG		2
9453	69	FORD	GALA	9G54H180657	222222221	1	3	3	3	3	030	1	1	1	1	2	1		SINCLAIR REG		2
9454	69	FORD	LTD	9G64Y193462	222222221	1	3	4	4	5	012	1	1	1	1	2	1		CLARK REG		2
9455	69	FORD	FAIR	9K30F188527	222222221	1	3	4	3	3	060	1	1	1	1	2	1		SUPER SHELL		2
9456	69	FORD	THUN	9Y84N100591	222222221	1	3	4	4	3	030	1	1	1	1	2	1		MOBIL PREM		2
9457	69	MERC	MONG	9H11H523268	222222221	1	3	3	3	5	008	3	1	1	1	2	1		STANDARD REG		2
9458	69	OLDS	98	386399M165241	222222221	1	3	3	3	3	024	1	1	1	1	2	1		ONYX REG		2
9459	69	OLDS	CUTL	336679M319402	222222221	1	3	3	3	5	013	1	1	1	1	2	1		SITE PREM		2
9460	69	PLYM	SATE	RH23F9C299505	222222221	1	3	4	3	3	084	1	1	1	1	2	1		CLARK REG		2
9461	69	PLYM	VALI	VH21B98142122	222222221	1	3	4	4	5	002	2	2	2	2	2	1		TEXAS REG		2

APPENDIX C

LISTING OF TEST VEHICLE MAINTENANCE DATA

ST. LOUIS

VEH	YR	MAKE	MODL	VIN	PERFORM	S	O	T	L	U	C	R	W	O	P	V	N	PB	FUEL	MMT	M
9462	69	PONT	LEMA	237379B131879	222222221	1	3	3	3	5	010	1	1	1	1	2	1		STANDARD REG		2
9463	69	PONT	CATA	252399R174915	222222221	1	3	4	4	5	010	1	3	4	2	2	1		FINA PREM		2
9464	69	PONT	STAW	266369X139901	222222221	1	3	4	4	5	010	3	1	1	1	2	1		SHELL PREM		2
9465	69	TOYO	CORO	RT43176465	222222221	1	3	3	3	2	033	1	4	4	2	2	1		MARS PREM		2
9466	69	VOLK	SEDA	11906811	222222221	1	3	4	3	3	030	1	2	2	2	2	1		SHELL REG		2
9467	69	VOLK	SEDA	119925242	222222221	1	3	4	4	2	022	1	1	1	1	2	1		SHELL REG		2
8468	66	AMC	STAW	66085	222222221	1	3	3	3	5	020	1	6	4	6	2	1		SINCLAIR REG		2
8469	68	AMC	RAMB	A8A060B320517	222222221	1	3	4	4	5	010	1	1	1	1	2	1		SHELL REG		2
8470	67	AMC	REBE	67155	212222222	1	6	4	4	5	002	1	2	2	2	2	1		PHILLIPS REG		2
8471	68	BUIC	WILD	464878X101413	222222221	1	2	1	2	1	001	4	1	1	1	2	1		STANDARD REG		2
8472	68	BUIC	ELEC	482398H248503	222222221	1	3	3	3	2	100	1	2	2	2	2	1		SHELL/STAND PREM		2
8473	68	BUIC	LESA	454698X128400	222222221	1	3	3	3	3	002	1	1	1	1	2	1		SHELL REG		2
8474	66	CADI	DEVI	B6152601	222222221	1	3	4	3	5	030	1	1	1	1	2	1		SUNOCO PREM		2
8475	68	CHEV	CHEL	133378K244807	222222221	1	3	3	3	5	000	1	1	1	1	2	1		ZEPHYR REG		2
8476	67	CHEV	CHEL	136397K153618	222222221	1	3	4	4	3	027	2	1	1	1	2	1		FINA REG		2
8477	67	CHEV	IMPA	164877S125509	122222222	1	3	4	3	5	008	1	1	1	1	2	1		STANDARD REG		2
8478	68	CHEV	IMPA	164478S229956	222222221	1	3	4	3	3	025	1	1	1	1	2	1		ZEPHYR REG		2
8479	66	CHEV	IMPA	164376S154702	222222221	1	6	3	3	3	002	1	1	1	1	2	1		MOBIL		2
8480	68	CHEV	IMPA	164698S202049	222222221	1	2	3	3	4	100	1	1	1	1	2	1		STANDARD REG		2
8481	66	CHEV	CHEL	136396K174710	222222221	1	3	4	3	5	015	1	2	2	2	2	1		SHELL REG		2
8482	67	CHEV	CAMA	12337L110999	222222221	1	3	4	4	5	015	1	3	4	2	2	1		SHELL REG		2
8483	68	CHEV	CHEL	136698K155337	222222221	1	4	3	3	5	005	1	1	1	1	2	1		MOBIL PREM		2
8484	68	CHEV	CHEL	136378K241166	222222221	1	3	3	3	5	015	1	1	1	1	2	1		ZEPHYR REG		2
8485	68	CHEV	IMPA	164478S173283	222222221	1	3	4	3	3	050	1	2	2	2	2	1		PHILLIPS REG		2
8486	68	CHEV	IMPA	164878S257261	222122222	1	3	3	3	3	002	1	6	4	2	2	1		SHELL REG		2
8487	68	CHRY	NEWP	CE41G8C249353	222222221	1	3	4	4	3	040	1	2	2	2	2	1		STANDARD REG		2
8488	67	DODG	DART	LH41B72347283	222222221	1	4	4	3	4	031	1	3	4	2	2	1		ZEPHYR REG		2
8489	68	DODG	CORO	WH41F8G208746	222222221	1	3	4	3	5	007	1	1	1	1	2	1		SHELL REG		2
8490	68	DODG	MONA	DH43H8D158172	212222222	1	3	4	3	5	002	1	1	1	1	2	1		MOBIL PREM		2
8491	67	FORD	MUST	7F03C130412	222222221	1	3	4	3	5	002	1	1	1	1	2	1		STANDARD REG		2
8492	67	FORD	FAIR	7A35C194660	222222221	1	3	3	3	5	006	1	1	1	1	2	1		SINCLAIR REG		2
8493	66	FORD	FAIR	6A42C212072	222222221	1	6	3	4	5	010	2	1	1	1	2	1		WINCO REG		2
8494	68	FORD	GALA	8G54F182793	222222221	1	3	4	5	3	040	1	2	2	2	2	1		MOBIL REG		2
8495	68	FORD	TORI	8K44F238863	222222221	1	3	3	3	3	040	1	2	2	2	2	1		STANDARD REG		2
8496	68	FORD	GALA	8G561153224	222222221	1	3	4	4	3	040	1	1	1	1	2	1		SHELL REG		2
8497	67	FORD	MUST	7F01T158036	222222221	1	3	4	3	3	015	1	1	1	1	2	1		STANDARD REG		2
8498	67	FORD	GALA	764C2033449	221222222	1	3	3	3	5	002	1	3	4	2	2	1		SINCLAIR REG		2
8499	67	FORD	MUST	7F030205778	222222221	1	4	4	3	3	050	1	5	4	2	2	1		BONAFIDE REG		2
8500	66	FORD	GALA	6U65Y117651	222222221	1	3	3	3	3	040	1	1	1	1	2	1		FINA REG		2
8501	68	FORD	STAW	8U75Y177675	122222122	1	3	3	3	5	015	1	2	2	2	2	1		MOBIL REG		2
8502	67	LINC	CONT	7Y82G842776	222222221	1	3	4	4	5	012	1	1	1	1	2	1		PHILLIPS REG		2
8503	67	MERC	COUG	7F910513411	222222221	1	3	4	3	3	030	1	1	1	1	2	1		MARS REG		2
8504	67	OLDS	CUTL	336677M354214	222222221	1	3	4	3	5	012	1	1	1	1	2	1		TEXAS REG		2
8505	67	OLDS	98	386697M139000	222222221	1	3	4	3	3	040	1	1	1	1	2	1		VICKERS PREM		2
8506	68	OLDS	CUTL	336878M273198	222222221	1	3	3	3	5	030	1	2	2	2	2	1		CLARK REG		2
8507	68	PLYM	FRY3	PM41F8D187527	212222222	1	4	4	4	3	112	1	2	2	2	2	1		FINA REG		2
8508	68	PLYM	FRY3	PM41F8D110945	222222221	1	3	4	3	3	040	1	2	2	2	2	1		STANDARD REG		2
8509	68	PLYM	SATE	RP23C77164970	222222221	1	3	4	4	5	012	1	2	2	2	2	1		VICKERS REG		2
8510	66	PLYM	FRY3	PH41E64158121	222222221	1	3	4	4	5	010	1	2	2	2	2	1		MOBIL REG		2
8511	68	PONT	BONN	262398X104076	222222221	1	3	4	4	5	002	1	1	1	1	2	1		MOBIL PREM		2

APPENDIX C

LISTING OF TEST VEHICLE MAINTENANCE DATA

ST. LOUIS

VEH	YR	MAKE	MODL	VIN	PERFORM	S	O	T	L	U	C	R	W	D	P	V	N	PB	FUEL	MMT	M
8512	66	PONT	CATA	252396X141669	222222221	1	3	3	3	5	002	3	1	1	1	2	1		PEP REG		2
8513	68	PONT	TEMP	235278K101085	222222221	1	6	1	6	6	002	2	1	1	1	2	1		MOBIL REG		2
8514	67	PONT	STAW	252357X177583	222222221	1	3	4	3	5	010	1	1	1	1	2	1		SHELL PREM		2
8515	68	PONT	STAW	262458C100840	222222221	1	3	4	3	3	025	3	1	1	1	2	1		STANDARD REG		2
8516	67	VOLK	SEDA	1117698931	222222221	1	4	4	4	5	002	1	1	1	1	2	1		DERBY REG		2
8517	66	VOLK	SEDA	316176520	122212222	1	3	4	3	5	010	1	1	1	1	2	1		ZEPHYR REG		2

APPENDIX C

LISTING OF TEST VEHICLE MAINTENANCE DATA

WASHINGTON D.C.

VEH	YR	MAKE	MODL	VIN	PERFORM	S	O	T	L	U	C	R	W	D	P	V	N	PB	FUEL	MMT	M
7001	76	CHEV	G10	CGL156U152713	222222221	1	1	1	1	1	001	1	2	2	2	1	2	0.022	SHELL SUPER REG		2
7002	76	CHEV	G10	CGL156U160290	212221222	2	1	1	1	1	001	1	4	4	2	1	2	0.036	EXXON UNLD REG		2
7003	76	CHEV	G10	CGL156U113697	222222221	2	3	1	1	1	001	1	2	2	2	3	2	0.045	EXXON UNLD REG		2
7004	76	CHEV	G10	CGL156U105920	222222221	1	2	1	1	1	001	1	2	2	2	1	2	0.098	BP REG UNLD		2
7005	76	DODG	B100	B11AE6X065504	222222221	1	1	1	1	1	001	1	3	4	2	1	2	0.017	AMOCO UNLD REG		2
7006	76	DODG	B100	B11AB6V079707	111111122	3	3	1	1	1	001	1	5	3	4	1	2	0.013	EXXON REG UNLD		2
7007	76	FORD	E100	E04BHB38641	222222122	1	2	1	1	1	001	1	2	2	2	1	2	0.031	ALERT UNLD. REG.		2
7008	76	FORD	E100	E04HHA50395	222222221	2	3	1	1	1	001	1	4	3	3	1	2	0.073	AMOCO PREM UNLD		2
7009	76	FORD	F100	F10YKA76662	222222221	1	1	2	3	2	030	1	3	4	2	1	2	0.027	SUPER SHELL UNLD		2
7010	76	DATS	620	HL620820864	222222221	1	3	1	1	1	001	1	3	4	2	2	1	0.470	HESS REG		2
7011	75	CHEV	C10	CCY145B114510	222222221	2	3	3	3	5	005	1	3	3	5	1	2	0.037	CITCO		2
7012	75	CHEV	C10	CCV145B118048	222212222	1	3	1	2	1	001	1	3	3	5	1	2	0.045	MOBIL UNLD		2
7013	75	CHEV	G10V	CGY155U173622	222222122	1	3	2	3	3	070	1	3	4	2	1	2	0.047	BP-SHELL UNLD RG		2
7014	75	DODG	B100	B11AE5X021834	222222122	1	3	3	3	5	002	1	3	4	2	1	2	0.057	TEXACO REG UNLD		2
7015	75	FORD	F100	F10GEV23923	222222221	1	3	4	4	2	002	1	5	4	2	1	2	0.029	EXXON UNLD REG		2
7016	75	FORD	F100	F10BEX20230	222222221	1	3	1	2	1	001	1	2	2	2	1	2	0.021	BP UNLD		2
7017	75	FORD	F100	F10YNW20336	221222212	1	2	3	3	2	035	1	4	4	2	1	2	0.051	SHELL REG UNLD		2
6018	76	AMC	PACE	A6A667A273549	222222221	1	1	1	1	1	001	1	5	3	3	1	2	0.046	GULF UNLD REG		2
6019	76	BUIC	REGA	4J57J6G111597	222212221	1	3	3	3	2	038	1	3	4	2	3	2	0.075	ARCO REG UNLD		2
6020	76	BUIC	ELEC	4V37Y6E107179	121221122	1	3	1	1	1	001	1	5	3	3	1	2	0.037	SUPER SHELL UNLD		2
6021	76	CADI	DEVI	6D47S6Q198899	222222221	1	3	1	1	1	001	1	5	4	2	1	2	0.045	ANY UNLD		2
6022	76	CHEV	MONT	1H57V6B561501	222222221	1	1	1	1	1	001	1	2	2	2	1	2	0.066	AMOCO UNLD REG		2
6023	76	CHEV	MALI	1D37Q6B417736	222222221	1	3	1	1	1	001	1	3	4	5	1	2	0.076	ANY UNLD.		2
6024	76	CHEV	MONZ	1R07B62115959	211222122	3	1	1	1	1	001	1	4	3	3	1	2	0.027	GULFTANE UNLD		2
6025	76	CHEV	MALI	1D29Q6B428293	222222221	1	2	1	2	1	001	2	6	4	2	1	2	0.058	AMOCO UNLD REG		2
6026	76	CHEV	MONT	1H57V6B557816	222221222	1	1	1	1	1	001	1	2	2	2	1	2	0.073	AMOCO UNLD REG		2
6027	76	CHEV	CAMA	1Q87D6N566015	222211222	2	1	2	3	5	001	1	2	2	2	1	2	0.028	BP UNLD REG		2
6028	76	CHEV	CHET	1B08I6Y149985	222222221	2	1	1	1	1	001	1	2	2	2	1	2	0.072	EXXON UNLD		2
6029	76	DODG	ASPE	NL41G6F169333	112222222	1	1	1	1	1	001	1	2	2	2	1	2	0.045	EXXON UNLD		2
6030	76	DODG	ASPE	NH45C6B236623	122121221	1	1	1	1	1	001	3	5	3	3	1	2	0.038	HOMOCO UNLD		2
6031	76	FORD	PINT	6T10Y125396	222122222	1	1	2	3	2	002	1	4	3	3	1	2	0.035	SHELL SUPER UNLD		2
6032	76	FORD	LTD	6B74S178099	222222221	1	1	1	1	1	001	1	2	2	2	1	2	0.022	AMOCO UNLD REG		2
6033	76	FORD	TORI	6H40H114939	112222222	2	3	2	3	2	000	1	5	3	3	1	2	0.031	EXXON UNLD REG		2
6034	76	FORD	GRAN	6E83L204009	212222222	1	3	1	1	1	001	1	2	2	2	1	2	0.044	EXXON UNLD REG		2
6035	76	FORD	GRAN	6E81F233366	222222221	1	1	1	1	1	001	1	2	2	2	1	2	0.049	AMOCO UNLD REG		2
6036	76	FORD	GRAN	6E81F231416	222222221	1	1	1	1	1	001	1	2	2	2	1	2	0.041	AMOCO UNLD REG		2
6037	76	MERC	MARQ	6Z74S544719	222222122	1	1	1	1	1	001	1	2	2	2	1	2	0.067	ANYTHING REG UNL		2
6038	76	MERC	COME	6K30L515462	222222221	1	1	1	1	1	001	1	2	2	2	1	2	0.062	AMOCO REG UNLD		2
6039	76	OLDS	CUTL	3G37F6M149673	222222221	1	1	1	1	1	001	1	2	2	2	1	2	0.048	GIANT UNLD REG		2
6040	76	OLDS	CUTL	3M57R6D115122	112212221	3	3	2	3	2	040	1	5	3	3	1	2	0.022	AMOCO SUPREME		2
6041	76	OLDS	DELT	3N69T6M288261	222222221	1	1	1	1	1	001	1	2	2	2	1	2	0.057	SHELL SUPER UNLD		2
6042	76	PLYM	VOLA	HP41C6F160192	112212222	2	3	1	1	1	001	1	4	4	2	1	2	0.070	ANY UNLD		2
6043	76	PLYM	FURY	RH23G6A121133	221222222	1	1	1	1	1	001	1	2	2	2	1	2	0.025	MOBIL ESSO UNLD		2
6044	76	PONT	GRNP	2J57M6A115809	222222221	1	1	1	1	1	001	1	3	4	2	1	2	0.047	AMACO UNLD REG		2
6045	76	PONT	CATA	2L57N6P135957	222222221	1	6	6	6	6	002	4	6	4	2	1	2	0.058	ANY UNLD		2
6046	76	DATS	B210	HLB210723434	222212222	1	3	1	1	1	001	1	2	2	2	2	1	0.480	CROWN REG		2
6047	76	DATS	710	JHL710893281	222222221	1	3	2	3	2	014	1	3	4	2	2	1	0.074	SUNOCO UNLD		2
6048	76	TOYO	CORO	TE31108682	222222221	1	3	1	1	1	001	1	3	3	3	2	1	0.470	CITCO REG		2
6049	76	TOYO	CORO	RT105024536	222222221	2	3	1	1	1	001	1	3	4	2	2	1	0.290	EXXON EXTRA LEAD		2
6050	76	VOLK	RABB	1763167224	222222221	1	3	1	1	1	001	1	2	2	2	1	2	0.039	CROWN UNLD		2

APPENDIX C

LISTING OF TEST VEHICLE MAINTENANCE DATA

WASHINGTON D.C.

VEH	YR	MAKE	MODL	VIN	PERFORM	S	O	T	L	U	C	R	W	D	P	V	N	PB	FUEL	MMT	M
6051	76	VOLK	RABB	1763017521	221122222	3	3	1	1	1	001	1	5	3	3	1	2	0.057	EXXON UNLD REG		2
5052	75	AMC	PACE	A5A667A298362	222222122	1	3	2	1	1	001	1	3	4	2	1	2	0.043	ANY UNLD.		2
5053	75	BUIC	LESA	4N57J5Y111000	222222112	2	3	1	2	1	001	1	3	4	2	1	2	0.051	GULF UNLD REG		2
5054	75	BUIC	ELEC	4X37T5H547509	222222221	1	3	3	3	2	070	1	3	4	2	1	2	0.041	AMOCO PREM UNLD		2
5055	75	CADI	DEVI	6D49S5Q149390	221222222	1	3	2	3	2	058	1	3	3	3	1	2	0.047	TEX MOB SHEL UNL		2
5056	75	CHEV	VEGA	1V77B5U129426	111122222	3	3	3	3	2	015	1	5	3	5	1	2	0.028	GULFTANE		2
5057	75	CHEV	MONT	1H57H5B498067	222222221	1	3	4	3	2	050	1	2	2	2	1	2	0.057	EXXON UNLD.		2
5058	75	CHEV	IMPA	1L39H51132061	222222221	1	3	1	1	1	001	3	3	4	2	1	2	0.022	ANY UNLD.		2
5059	75	CHEV	CAPR	1N45U5Y130127	222222221	1	3	2	3	2	030	1	4	4	2	1	2	0.050	PHILIPS 66 UNLD		2
5060	75	CHEV	CAMA	1Q87D5N572270	221222222	1	3	3	3	3	002	1	2	2	2	1	2	0.042	SHELL UNLD.		2
5061	75	CHRY	NEWY	CS23T53136051	221222222	1	3	2	6	2	028	1	5	4	2	1	2	0.071	TEXACO/CITCO		2
5062	75	DODG	DART	LL29C5B101129	222222122	2	3	1	2	1	001	1	5	4	2	1	2	0.035	SHELL		2
5063	75	FORD	MUST	5F02Y133654	222222221	1	3	4	4	3	035	1	3	3	5	1	2	0.021	AMOCO UNLD.		2
5064	75	FORD	LTD	5B63H188919	222222221	1	3	4	3	3	060	1	3	4	2	1	2	0.033	SHELL SUPER REG		2
5065	75	FORD	TORI	5H38S108497	222222221	1	1	1	1	1	001	1	3	4	2	1	2	0.055	GULFCREST UNLD		2
5066	75	FORD	MAVE	5K92L185710	222222221	1	2	1	2	1	001	4	2	2	2	1	2	0.033	EXXON UNLD		2
5067	75	FORD	GRAN	5E81F228245	222222221	1	3	6	6	6	002	4	6	4	2	1	2	0.023	AMOCO REG UNLD		2
5068	75	MERC	MARQ	5Z62A505662	212221222	1	3	2	3	2	100	1	5	3	5	1	2	0.052	AMOCO PREM UNLD		2
5069	75	OLDS	DELT	3N69K5E121954	222222221	1	3	2	3	2	000	1	5	4	2	1	2	0.065	EXXON UNLD		2
5070	75	OLDS	CUST	3Q45T5X103031	222222221	1	3	2	4	2	002	1	4	4	2	1	2	0.049	MOBIL UNLD REG		2
5071	75	PLYM	FURY	RL21C5G121511	111211122	3	3	2	3	5	018	1	5	3	5	1	2	0.052	AMOCO UNLD		2
5072	75	PLYM	FURY	RP23G5G173240	222212222	2	2	2	4	2	030	1	5	3	5	1	2	0.033	GULF UNLD		2
5073	75	PONT	CATA	2L69R5P187698	222222212	2	3	3	3	5	010	1	5	3	3	1	2	0.063	SHELL UNLD		2
5074	75	PONT	FIRE	2T87M5N511229	222221222	1	3	2	3	2	100	1	5	3	5	1	2	0.042	SHELL UNLD REG		2
5075	75	DATS	B210	HLB210-100393	222222221	1	3	1	2	1	001	1	3	4	2	2	1	0.290	EXXON UNLD REG		2
5076	75	TOYO	CORO	RT105014073	222222221	1	3	3	3	2	002	1	2	2	2	2	1	0.510	HESS REG		2
5077	75	TOYO	CORO	TE38010124	222112222	1	2	3	3	2	050	2	3	3	3	2	1		AMOCO REG		2
5078	75	VOLK	RABB	1753423060	221222212	1	1	1	1	1	001	1	2	2	2	1	2	0.034	AMOCO UNLD PREM		2
5079	75	VOLK	RABB	1753148246	222121222	3	3	3	3	3	018	1	5	3	3	1	2	0.052	EXXON REG		2
4080	74	AMC	MATA	A4A157H492001	212222122	1	3	2	4	2	030	1	5	3	3	2	1		SHELL REG		2
4081	74	BUIC	REGA	4J57H4G132931	222212122	3	3	5	5	2	050	2	5	3	5	2	1		SUNOCO 220		2
4082	74	CADI	DEVI	6D49R4Q240155	222221222	2	3	2	3	3	002	1	3	4	2	1	2		SHELL UNLD.		3
4083	74	CHEV	VEGA	1V77A42149728	221222122	2	4	3	4	4	029	1	2	2	2	2	1		GULF REG		2
4084	74	CHEV	MALI	1D37H4B609275	222222221	1	3	3	4	3	020	1	4	4	2	2	1		GOOD GULF REG		2
4085	74	CHEV	NOVA	1X27D4W232648	321222121	3	3	4	3	5	010	1	4	4	2	2	1		SHELL SUPER REG		2
4086	74	CHEV	CAMA	1S87H4N122209	222122122	2	3	4	4	3	050	3	5	4	2	2	1		MOBIL UNLD REG		2
4087	74	CHEV	NOVA	1X27H4W171070	212212222	3	3	2	3	2	020	1	3	3	3	2	1		AMOCO REG		2
4088	74	CHEV	MALI	1G35R4B463017	122222222	1	3	3	3	3	040	1	1	1	1	2	1		SCOTT REG		2
4089	74	CHRY	NEWP	CL41M4C150207	222122222	1	3	4	2	2	012	1	5	3	4	2	1		SKY CHIEF PREM		2
4090	74	DODG	DART	LL29C4B124519	222222122	1	3	2	4	4	028	1	3	4	2	2	1		MOBIL REG		2
4091	74	FORD	PINT	4T10X300566	211222222	2	3	1	2	1	001	1	3	4	2	2	1		CROWN REG		2
4092	74	FORD	TORI	4H25F227184	222222111	3	3	3	3	3	030	2	2	2	2	2	1		EXXON REG		2
4093	74	FORD	MAVE	4X91L142465	222222221	1	3	2	3	2	002	1	2	2	2	2	1		AMOCO-PHILPS REG		2
4094	74	FORD	STAW	4N74S109769	122211222	2	2	4	3	5	008	1	1	1	1	2	1		SUNOCO 190 REG		2
4095	74	FORD	TORI	4H43H134185	222222221	1	3	4	4	5	002	1	2	2	2	2	1		CHEVRON REG.		2
4096	74	MERC	COUG	4A93H541321	222222122	1	3	4	3	6	002	3	4	4	2	2	1		AMOCO		2
4097	74	OLDS	CUTL	3J57K4M197166	222222221	1	3	4	4	2	002	1	4	4	2	2	1		SCOTT REG		2
4098	74	OLDS	CUST	3R35T4M163271	222222221	1	3	4	3	3	040	2	5	4	2	2	1		CROWN REG		2
4099	74	PLYM	VALI	VL41G4R162986	211222212	2	3	4	3	2	002	1	1	1	1	2	1		TEXACO REG		2
4100	74	PLYM	VALI	VL41C4R128845	222221222	1	3	2	3	2	040	1	5	4	2	2	1		EXXON REG		2

APPENDIX C

LISTING OF TEST VEHICLE MAINTENANCE DATA

WASHINGTON D.C.

VEH	YR	MAKE	MODL	VIN	PERFORM	S	O	T	L	U	C	R	W	D	P	V	N	PB	FUEL	MMT	M
4101	74	PONT	VENT	2Y27M4L123993	222222221	1	3	3	3	2	125	1	5	3	5	2	1		SHELL REG.		2
4102	74	DATS	710	JHL710-004630	222222221	2	3	2	3	2	080	1	5	4	6	2	1		EXXON REG		2
4103	74	TOYO	CORO	TE28557495	222222122	1	4	3	4	2	065	3	2	2	2	2	1		SHELL REG		2
4104	74	TOYO	CELI	RA21180743	222221212	1	3	2	3	5	010	1	5	3	5	2	1		ANY REG		2
4105	74	VOLK	SEDA	1142742841	222222221	1	3	3	2	3	045	3	3	4	2	2	1		CROWN REG		2
4106	74	VOLK	SEDA	1342608864	222222221	1	3	2	3	2	065	1	3	2	2	2	1		HESS REG		2
3107	73	AMC	HORN	A3A037E723446	222222221	1	3	4	3	3	030	1	4	4	2	2	1		SCOTT REG		2
3108	73	BUIC	CNTR	4P57T3Y127748	222221222	1	3	6	6	6	002	4	1	1	1	2	1		SCOTTS PREM		2
3109	73	BUIC	LESA	4L57J3Y134588	222222221	2	3	3	3	2	050	2	4	3	3	2	1		ARCO SUPREME		2
3110	73	CADI	DEVI	6D49R3Q30103	222222221	1	3	2	3	2	130	1	3	4	2	2	1		SHELL REG		2
3111	73	CHEV	VEGA	1V77B3U125882	122211222	1	4	4	3	3	030	2	1	2	2	2	1		ANY BRAND		2
3112	73	CHEV	MONT	1H57H3K464447	222222221	1	3	4	3	3	050	1	3	4	2	2	1		AMOCO REG		2
3113	73	CHEV	CAMA	1S87H3N150417	222222221	1	3	2	3	5	010	1	2	2	2	2	1		EXXON UNLD REG		2
3114	73	CHEV	BELA	1K45H3T201859	222222122	1	6	2	6	5	002	1	1	4	2	2	1		HESS REG.		2
3115	73	CHEV	NOVA	1X27H3W240145	222222221	1	3	3	3	5	020	1	3	4	2	2	1		AMOCO REG		2
3116	73	DODG	DART	LL41C3R226782	222222122	1	3	4	3	5	007	2	3	4	2	2	1		SCOTT REG		2
3117	73	FORD	PINT	3T12X188910	221222122	1	3	3	3	5	006	1	2	2	2	2	1		TEXACO REG		2
3118	73	FORD	TORI	3B30H151676	222222221	3	3	3	3	3	065	1	2	2	2	2	1		EXXON PREM		2
3119	73	FORD	MAVE	3X92F102351	222212222	2	3	3	3	3	035	1	1	1	1	2	1		TEXACO REG		2
3120	73	FORD	TORI	3B42H186165	222222212	1	3	5	3	5	005	2	3	4	2	2	1		SCOTT REG		1
3121	73	FORD	LTD	3J66S199241	222222221	1	3	2	3	5	015	1	3	4	2	2	1		EXXON REG		2
3122	73	MERC	MONG	3H10S548809	221221222	3	3	3	3	5	010	2	3	4	2	2	1		SHELL LEADED REG		2
3123	73	OLDS	98	3X39T3E143792	222122222	3	4	6	3	3	002	2	4	4	2	2	1		HESS UNLD		2
3124	73	OLDS	CUTL	3J57K3M120376	222212222	2	3	3	3	3	034	1	4	3	5	2	1		AMOCO REG		2
3125	73	PLYM	SATE	RP23G3R159715	222222221	1	3	4	3	5	008	1	4	3	5	2	1		SCOTT REG		2
3126	73	PLYM	VALI	VL41C3R230614	222222221	1	3	5	5	2	025	1	5	4	2	2	1		GULF UNLD.		2
3127	73	PONT	GRNV	2P49W3D124570	222222221	1	3	4	4	3	035	3	3	4	2	2	1		SHELL REG		2
3128	73	PONT	LEMA	2G37M3P194524	222222221	1	6	5	6	6	002	2	4	4	2	2	1		EXXON SUP		2
3129	73	DATS	610	PL610021483	222222221	1	3	3	3	3	030	1	3	3	5	2	1		HESS UNLD		2
3130	73	OPEL	1900	0L11NC9826265	222222122	1	3	3	2	6	002	1	1	1	1	2	1		AMOCO REG		2
3131	73	TOYO	CORO	RT89024238	222221122	2	3	3	3	3	002	1	4	3	3	2	1		GULF-EXXON PREM		2
3132	73	VOLK	TRAN	2232037036	111111122	3	3	2	3	3	056	1	6	3	5	2	1		EXXON UNLD.		2
3133	73	VOLK	SEDA	1132736962	222212222	2	3	3	3	3	014	1	5	4	2	2	1		EXXON REG		2

Appendix D

LISTING OF SULFATE TEST PROCEDURE RESULTS ON INDIVIDUAL VEHICLES

APPENDIX D

LISTING OF SULFATE TEST PROCEDURE
RESULTS ON INDIVIDUAL VEHICLES

ST. LOUIS

VEHICLE NUMBER	YEAR	MAKE	MODEL	CID	HC	CO	CO2	NOXC	FUEL ECONOMY	H2SO4 (CORRECTED)
7002	1976	CHEV	C10	350	.79	30.97	574.4	2.41	14.19	.8
7005	1976	DODG	B100	318	.29	6.79	487.9	2.77	17.77	.3
7014	1975	DODG	C100	318	.60	9.12	476.5	4.11	18.01	2.0
7015	1975	FORD	F100	302	.30	3.82	590.5	1.85	14.86	1.3
7016	1975	FORD	F100	300	.37	3.15	404.5	1.86	21.62	.6
6022	1976	CHEV	IMPA	350	.26	3.87	574.9	3.43	15.26	.1
6024	1976	CHEV	VEGA	140	2.03	42.02	271.5	1.73	25.80	.1
6026	1976	CHEV	ELCA	305	.33	9.07	460.0	3.16	18.67	.1
6027	1976	CHEV	NOVA	250	.66	12.75	360.5	3.19	23.19	.1
6035	1976	FORD	GRAN	302	.53	1.48	492.6	1.99	17.87	1.9
6039	1976	OLDS	CUTL	260	.28	4.94	469.8	4.80	18.55	1.4
6043	1976	PLYM	VOLA	318	2.93	8.81	407.5	1.67	20.61	.3
6045	1976	PONT	GRNP	400	1.48	15.70	520.8	2.38	16.13	1.0
6204	1976	AMC	HORN	232	.95	15.65	357.9	4.27	23.03	.3
6217	1976	CHEV	CAPR	350	1.71	70.33	484.4	4.61	14.78	.3
6219	1976	CHEV	STAW	350	1.13	44.33	505.7	2.25	15.33	.1
6220	1976	CHEV	CAMA	250	.13	.71	393.2	3.54	22.48	.2
6221	1976	CHEV	STAW	350	.85	39.32	511.2	2.74	15.42	2.0
6223	1976	CHEV	CAPR	454	.11	8.04	612.5	1.23	14.19	7.4
6224	1976	CHEV	MONT	350	.98	30.02	485.6	2.25	16.56	.2
6226	1976	CHEV	CAMA	305	1.15	41.97	436.6	2.30	17.53	.1
6227	1976	CHEV	MONT	350	.53	17.98	525.6	8.17	15.98	.4
6228	1976	CHEV	VEGA	140	1.30	32.35	292.3	2.25	25.56	.1
6233	1976	CHEV	MALI	350	1.52	45.34	476.2	2.48	16.07	.6
6234	1976	CHEV	NOVA	305	1.69	39.38	413.0	3.21	18.48	0.0
6235	1976	CHEV	CHET	140	.90	24.60	305.9	2.88	25.55	.4
6237	1976	CHEV	MALI	305	.59	22.97	458.0	2.55	17.90	.7
6238	1976	CHEV	VEGA	140	1.15	39.05	302.1	2.21	24.18	.0
6239	1976	CHEV	NOVA	250	.09	.86	402.1	3.50	21.99	.2
6240	1976	CHRY	CORD	318	.80	5.70	491.3	9.35	17.65	1.0
6241	1976	CHRY	NEWY	400	.72	15.46	645.6	4.35	13.20	1.5
6253	1976	FORD	MAVE	250	.35	.09	416.2	2.10	21.26	4.8
6254	1976	FORD	GRAN	302	.61	.32	457.5	3.21	19.30	3.8
6258	1976	FORD	GRAN	250	.40	3.27	511.1	1.61	17.15	3.6
6259	1976	FORD	PINT	140	.24	.38	367.2	4.34	24.08	.8
6261	1976	FORD	LTD	351	.81	24.76	547.9	7.91	15.06	.4

EMISSION RESULTS IN GRAMS PER MILE
FUEL ECONOMY IN MILES PER GALLON
SULFATE RESULTS IN MILLIGRAMS PER MILE

APPENDIX D

LISTING OF SULFATE TEST PROCEDURE
RESULTS ON INDIVIDUAL VEHICLES

ST. LOUIS

VEHICLE NUMBER	YEAR	MAKE	MODEL	CID	HC	CO	CO2	NOXC	FUEL ECONOMY	H2S04 (CORRECTED)
6266	1976	FORD	GRAN	302	.70	1.45	465.9	2.84	18.87	.6
6267	1976	FORD	PINT	140	.31	.73	374.8	3.53	23.55	.3
6275	1976	OLDS	CUTL	350	1.95	8.06	466.1	9.09	18.30	.7
6276	1976	OLDS	CUTL	350	.24	4.24	472.7	2.12	18.49	0.0
6277	1976	OLDS	OMEG	250	1.11	17.86	410.4	4.06	20.08	.5
6280	1976	OLDS	CUTL	350	.66	11.70	489.3	2.43	17.41	.4
6281	1976	OLDS	CUTL	350	1.56	31.55	417.1	2.00	18.82	.1
6282	1976	OLDS	CUTL	350	.72	14.66	471.3	1.88	17.87	.2
6284	1976	PLYM	VOLA	318	1.72	21.33	437.8	1.97	18.61	.6
6287	1976	PLYM	VOLA	225	2.51	29.43	391.7	3.39	19.90	1.0
6290	1976	PLYM	STAW	225	2.81	54.98	364.5	2.10	19.30	.1
6291	1976	PONT	SUNB	231	.75	17.09	355.8	3.38	23.05	0.0
6292	1976	PONT	BONN	400	.20	.40	506.3	4.82	17.49	.2
6294	1976	PONT	LEMA	260	.18	1.58	476.6	6.76	18.50	.5
6295	1976	PONT	CATA	455	1.24	17.81	581.0	2.85	14.48	.5
6296	1976	PONT	FIRE	350	1.18	28.16	435.7	3.17	18.35	.0
6298	1976	PONT	VENT	250	.61	9.72	386.6	4.77	21.98	.1
6314	1976	VOLK	RABB	97	.08	1.56	314.3	2.83	28.00	.0
5052	1975	AMC	GREM	258	.78	15.46	403.8	2.41	20.61	.0
5053	1975	BUIC	STAW	350	1.78	47.95	490.0	2.38	15.54	.1
5056	1975	CHEV	MONZ	140	.30	9.10	327.6	3.00	25.88	0.0
5057	1975	CHEV	MONT	350	.64	19.69	470.6	3.17	17.62	.1
5058	1975	CHEV	MALI	350	1.88	20.06	466.8	2.49	17.60	.1
5060	1975	CHEV	CAMA	250	.69	6.25	391.7	3.29	21.99	.4
5063	1975	FORD	PINT	140	.47	7.00	344.1	2.58	24.89	.4
5064	1975	FORD	MAVE	302	1.13	14.04	560.6	3.98	15.14	1.2
5066	1975	FORD	GRAN	250	.21	.36	474.7	3.16	18.65	2.7
5067	1975	FORD	GRAN	302	.65	3.88	470.9	3.11	18.53	1.1
5068	1975	MERC	MONG	351	.24	8.39	604.2	3.94	14.36	.5
5069	1975	OLDS	CUTL	350	1.83	45.76	454.0	1.17	16.69	1.0
5070	1975	OLDS	98	455	1.13	32.56	512.0	1.46	15.66	.1
5073	1975	PONT	CATA	400	1.30	32.60	467.0	5.81	16.99	.3
5074	1975	PONT	FIRE	350	2.92	55.74	449.9	2.91	16.23	.8
5078	1975	VOLK	SCIR	90	5.37	33.54	369.3	3.25	20.22	.5
5317	1975	AMC	MATA	304	.17	1.04	513.7	3.31	17.20	7.1
5318	1975	BUIC	SKYH	231	.72	18.53	349.7	2.91	23.29	0.0

EMISSION RESULTS IN GRAMS PER MILE
FUEL ECONOMY IN MILES PER GALLON
SULFATE RESULTS IN MILLIGRAMS PER MILE

APPENDIX D

LISTING OF SULFATE TEST PROCEDURE
RESULTS ON INDIVIDUAL VEHICLES

ST. LOUIS

VEHICLE NUMBER	YEAR	MAKE	MODEL	CID	HC	CO	CO2	NOXC	FUEL ECONOMY	H2SO4 (CORRECTED)
5320	1975	CHEV	MON7	140	.76	9.36	299.5	2.93	28.03	.4
5321	1975	CHEV	IMPA	350	1.88	13.49	578.4	6.41	14.66	1.2
5323	1975	CHEV	CAMA	350	.71	30.45	483.3	2.33	16.64	0.0
5325	1975	DODG	DART	318	.56	10.91	402.2	3.10	21.07	.4
5327	1975	FORD	LTD	400	.65	11.54	643.3	3.17	13.38	11.0
5330	1975	MERC	COUG	351	.92	2.77	535.9	6.88	16.34	1.9
5331	1975	OLDS	CUTL	260	.79	15.48	413.6	3.73	20.15	0.0
5332	1975	OLDS	CUTL	350	.18	3.28	506.5	2.22	17.33	.6
5333	1975	PLYM	FURY	318	.60	14.10	481.1	6.25	17.57	.6
5338	1975	MAZD	STAW	70	.33	4.48	480.5	1.99	18.17	1.6

EMISSION RESULTS IN GRAMS PER MILE
FUEL ECONOMY IN MILES PER GALLON
SULFATE RESULTS IN MILLIGRAMS PER MILE

APPENDIX D

LISTING OF SULFATE TEST PROCEDURE RESULTS ON INDIVIDUAL VEHICLES (EPA CORRELATION VEHICLES)

VEHICLE NUMBER	YEAR	MAKE	CID	HC	CO	CO2	NOXC	FUEL ECONOMY	H2S04 (CORRECTED)
0001	1977	FORD	302	0.48	3.10	473.1	1.99	18.51	0.33
0001	TEST	NO. 2	302	0.50	3.02	456.8	1.76	19.16	0.18
0001	TEST	NO. 3	302	0.46	2.42	450.3	1.73	19.48	0.16
0001	TEST	NO. 4	302	0.77	7.31	439.9	1.69	19.55	0.08
0001	TEST	NO. 5	302	1.08	9.80	459.3	1.69	18.56	0.63
0001	TEST	NO. 6	302	1.29	10.17	445.1	1.62	19.08	0.36
0002	1975	AMC	304	0.23	0.29	500.1	2.61	17.71	4.38
0002	TEST	NO. 2	304	0.28	0.29	484.0	2.38	18.29	4.46
0002	TEST	NO. 3	304	0.26	0.31	479.9	2.15	18.45	5.35
0002	TEST	NO. 4	304	0.28	0.57	466.8	1.99	18.94	8.70
0002	TEST	NO. 5	304	0.26	0.43	466.7	1.96	18.95	8.06

Appendix E

LISTING OF FEDERAL TEST PROCEDURE RESULTS ON INDIVIDUAL VEHICLES

APPENDIX E

LISTING OF FEDERAL TEST PROCEDURE RESULTS ON INDIVIDUAL VEHICLES

CALIFORNIA

VEHICLE NUMBER	YEAR	MAKE	MODEL	CID	TEST TYPE	HC	CO	CO2	NOXC	FUEL ECONOMY
7001	1976	CHEV	G10V	250	COLD TRANS	1.57	8.33	591.8	1.94	14.55
					COLD STAB	.10	1.67	653.6	.94	13.52
IDLE HC,PPM/HEXANE				65.	HOT TRANS	.29	5.75	541.3	1.81	16.10
IDLE CO,PCT (MEAS)				.25						
IDLE CO,PCT (SPEC)				99.99	1975 FTP	.46	4.15	610.3	1.38	14.36
OTHER TESTS: HFET, MODAL										
*7001	TEST NO. C				COLD TRANS	1.15	11.32	760.6	3.80	11.35
					COLD STAB	.13	2.49	706.9	1.12	12.48
					HOT TRANS	.31	1.45	714.4	3.64	12.37
					1975 FTP	.39	4.02	720.0	2.36	12.20
7002	1976	CHEV	C10	250	COLD TRANS	2.42	38.20	522.3	2.02	15.04
					COLD STAB	1.11	27.67	576.9	.91	14.22
IDLE HC,PPM/HEXANE				100.	HOT TRANS	.96	15.88	509.5	1.58	16.51
IDLE CO,PCT (MEAS)				2.50						
IDLE CO,PCT (SPEC)				99.99	1975 FTP	1.34	26.62	547.3	1.32	14.96
OTHER TESTS: HFET, MODAL										
*7002	TEST NO. C				COLD TRANS	2.46	40.85	570.0	2.87	13.82
					COLD STAB	1.09	26.72	595.0	1.03	13.86
					HOT TRANS	.89	16.75	547.0	2.55	15.40
					1975 FTP	1.31	26.91	576.8	1.83	14.24
7003	1976	CHEV	C10	250	COLD TRANS	1.77	17.88	525.7	3.56	15.87
					COLD STAB	.32	3.36	535.4	2.97	16.39
IDLE HC,PPM/HEXANE				720.	HOT TRANS	.55	5.58	466.1	3.73	18.62
IDLE CO,PCT (MEAS)				.20						
IDLE CO,PCT (SPEC)				99.99	1975 FTP	.68	6.96	514.5	3.30	16.82
OTHER TESTS: HFET, MODAL										
*7003	TEST NO. C				COLD TRANS	2.81	23.25	564.9	4.07	14.54
					COLD STAB	.34	3.99	539.5	3.04	16.23
					HOT TRANS	.45	8.31	501.4	4.62	17.21
					1975 FTP	.88	9.13	534.3	3.68	16.09

EMISSION RESULTS IN GRAMS PER MILE
FUEL ECONOMY IN MILES PER GALLON

*NOTE: Test No. C utilized the 1978 FTP for certification testing of 1978 model-year light-duty trucks.

APPENDIX E

LISTING OF FEDERAL TEST PROCEDURE RESULTS ON INDIVIDUAL VEHICLES

CALIFORNIA

VEHICLE NUMBER	YEAR	MAKE	MODEL	CID	TEST TYPE	HC	CO	CO2	NOXC	FUEL ECONOMY
7004	1976	CHEV	SCOT	250	COLD TRANS	1.97	58.66	609.7	3.89	12.53
					COLD STAB	.08	.92	594.6	3.69	14.88
IDLE HC.PPM/HEXANE				15.	HOT TRANS	.35	11.78	545.1	4.30	15.72
IDLE CO.PCT (MEAS)				.01						
IDLE CO.PCT (SPEC)				99.99	1975 FTP	.54	15.77	584.2	3.90	14.53
OTHER TESTS: HFET, MODAL										
7004	TEST NO. C				COLD TRANS	1.42	47.95	668.9	5.33	11.85
					COLD STAB	.10	.00	598.0	4.11	14.83
					HOT TRANS	.31	13.32	585.3	5.93	14.62
					1975 FTP	.43	13.51	609.1	4.86	14.05
7005	1976	DODG	B100	225	COLD TRANS	1.97	19.25	553.4	2.10	15.05
					COLD STAB	1.08	11.53	528.4	1.78	16.14
IDLE HC.PPM/HEXANE				320.	HOT TRANS	1.11	8.55	494.3	1.79	17.36
IDLE CO.PCT (MEAS)				.32						
IDLE CO.PCT (SPEC)				99.99	1975 FTP	1.27	12.31	524.2	1.85	16.21
OTHER TESTS: HFET, MODAL										
7005	TEST NO. C				COLD TRANS	2.18	23.16	580.6	2.54	14.23
					COLD STAB	1.21	8.30	520.4	1.86	16.52
					HOT TRANS	1.21	8.58	522.5	2.38	16.44
					1975 FTP	1.41	11.43	533.4	2.14	15.97
7006	1976	DODG	CUST	318	COLD TRANS	1.82	23.07	737.1	2.88	11.39
					COLD STAB	.78	13.81	870.2	2.36	9.92
IDLE HC.PPM/HEXANE				90.	HOT TRANS	.76	8.42	652.4	2.69	13.29
IDLE CO.PCT (MEAS)				2.50						
IDLE CO.PCT (SPEC)				99.99	1975 FTP	.99	14.24	783.4	2.56	10.97
OTHER TESTS: HFET, MODAL										
7006	TEST NO. C				COLD TRANS	1.46	19.98	804.4	3.24	10.56
					COLD STAB	.64	11.34	897.3	1.92	9.68
					HOT TRANS	.58	7.29	710.0	3.04	12.27
					1975 FTP	.80	12.01	827.1	2.50	10.46

EMISSION RESULTS IN GRAMS PER MILE
FUEL ECONOMY IN MILES PER GALLON

APPENDIX E

LISTING OF FEDERAL TEST PROCEDURE RESULTS ON INDIVIDUAL VEHICLES

CALIFORNIA

VEHICLE NUMBER	YEAR	MAKE	MODEL	CID	TEST TYPE	HC	CO	CO2	NOXC	FUEL ECONOMY
7007	1976	FORD	E100	300	COLD TRANS	.84	10.97	706.9	1.48	12.21
					COLD STAB	.28	1.81	759.5	.95	11.63
IDLE HC,PPM/HEXANE				10.	HOT TRANS	.90	7.71	626.1	1.33	13.84
IDLE CO,PCT (MEAS)				.01						
IDLE CO,PCT (SPEC)				99.99	1975 FTP	.57	5.30	712.3	1.16	12.29
OTHER TESTS: HFET, MODAL										
7007	TEST NO. C				COLD TRANS	.88	13.85	754.1	1.97	11.40
					COLD STAB	.31	1.81	765.3	1.02	11.54
					HOT TRANS	.61	8.70	670.0	1.49	12.94
					1975 FTP	.51	6.17	737.0	1.34	11.86
7008	1976	FORD	F100	360	COLD TRANS	4.20	108.99	656.5	.77	10.55
					COLD STAB	3.46	97.21	637.6	.56	11.08
IDLE HC,PPM/HEXANE				15.	HOT TRANS	2.78	60.76	582.8	.86	12.92
IDLE CO,PCT (MEAS)				.01						
IDLE CO,PCT (SPEC)				99.99	1975 FTP	3.43	89.69	626.6	.68	11.40
OTHER TESTS: HFET, MODAL										
7008	TEST NO. C				COLD TRANS	4.54	102.16	776.6	1.00	9.33
					COLD STAB	3.50	96.17	717.7	.52	10.09
					HOT TRANS	3.31	67.37	626.0	1.11	11.96
					1975 FTP	3.66	89.54	704.8	.78	10.35
7009	1976	FORD	E100	300	COLD TRANS	.62	8.03	639.0	2.29	13.58
					COLD STAB	.26	.52	631.1	1.52	14.03
IDLE HC,PPM/HEXANE				70.	HOT TRANS	.85	3.70	564.3	2.03	15.49
IDLE CO,PCT (MEAS)				1.30						
IDLE CO,PCT (SPEC)				99.99	1975 FTP	.50	2.93	614.5	1.82	14.30
OTHER TESTS: HFET, MODAL										
7009	TEST NO. C				COLD TRANS	.80	9.16	679.3	3.00	12.75
					COLD STAB	.26	1.14	637.6	1.74	13.86
					HOT TRANS	.77	7.84	608.8	2.49	14.23
					1975 FTP	.51	4.62	638.3	2.20	13.71

EMISSION RESULTS IN GRAMS PER MILE
FUEL ECONOMY IN MILES PER GALLON

APPENDIX E

LISTING OF FEDERAL TEST PROCEDURE RESULTS ON INDIVIDUAL VEHICLES

CALIFORNIA

VEHICLE NUMBER	YEAR	MAKE	MODEL	CID	TEST TYPE	HC	CO	CO2	NOXC	FUEL ECONOMY
7010	1976	TOYO	SR5	133	COLD TRANS	.66	12.72	556.2	2.63	15.35
					COLD STAB	.16	1.97	601.6	1.00	14.67
IDLE HC,PPM/HEXANE				11.	HOT TRANS	.39	4.58	456.0	2.35	19.11
IDLE CO,PCT (MEAS)				.01						
IDLE CO,PCT (SPEC)				99.99	1975 FTP	.32	4.89	552.5	1.70	15.81
OTHER TESTS: HFET, MODAL										
7010	TEST NO. C				COLD TRANS	.67	11.24	574.3	3.02	14.94
					COLD STAB	.10	1.47	596.6	1.12	14.81
					HOT TRANS	.09	.77	504.3	3.01	17.55
					1975 FTP	.21	3.29	566.8	2.02	15.50
7011	1975	CHEV	G10V	350	COLD TRANS	1.66	9.77	663.2	3.73	12.98
					COLD STAB	.58	.19	762.1	2.41	11.61
IDLE HC,PPM/HEXANE				5.	HOT TRANS	.79	3.33	598.7	3.35	14.63
IDLE CO,PCT (MEAS)				.02						
IDLE CO,PCT (SPEC)				99.99	1975 FTP	.86	3.02	697.2	2.94	12.60
OTHER TESTS: MODAL										
7011	TEST NO. C				COLD TRANS	1.71	11.28	746.5	5.39	11.53
					COLD STAB	.50	.63	793.0	3.74	11.16
					HOT TRANS	.64	3.73	661.8	5.68	13.25
					1975 FTP	.79	3.67	747.6	4.61	11.74
7012	1975	CHEV	C10	350	COLD TRANS	3.35	47.39	701.6	1.53	11.28
					COLD STAB	1.34	.15	714.6	1.06	12.34
IDLE HC,PPM/HEXANE				125.	HOT TRANS	1.18	1.34	642.4	1.50	13.69
IDLE CO,PCT (MEAS)				1.35						
IDLE CO,PCT (SPEC)				99.99	1975 FTP	1.71	10.20	692.2	1.28	12.44
OTHER TESTS: MODAL										
7012	TEST NO. C				COLD TRANS	3.14	44.39	737.7	1.93	10.86
					COLD STAB	1.43	.13	738.5	1.18	11.94
					HOT TRANS	1.33	1.48	675.2	1.91	13.02
					1975 FTP	1.76	9.61	721.1	1.53	11.97

EMISSION RESULTS IN GRAMS PER MILE
FUEL ECONOMY IN MILES PER GALLON

APPENDIX E

LISTING OF FEDERAL TEST PROCEDURE RESULTS ON INDIVIDUAL VEHICLES

CALIFORNIA

VEHICLE NUMBER	YEAR	MAKE	MODEL	CID	TEST TYPE	HC	CO	CO2	NOXC	FUEL ECONOMY
7013	1975	CHEV	G10V	350	COLD TRANS	1.44	12.51	807.1	1.50	10.68
					COLD STAB	.40	.05	770.9	.69	11.49
IDLE HC,PPM/HEXANE				25.	HOT TRANS	.66	3.43	703.4	.94	12.48
IDLE CO,PCT (MEAS)				.06						
IDLE CO,PCT (SPEC)				99.99	1975 FTP	.68	3.54	759.9	.93	11.56
OTHER TESTS: MODAL										
7013	TEST NO. C				COLD TRANS	1.77	17.22	892.6	1.40	9.59
					COLD STAB	.40	.05	802.4	.71	11.04
					HOT TRANS	.55	3.39	758.2	1.19	11.60
					1975 FTP	.72	4.50	808.9	.98	10.85
7014	1975	DODG	TRAD	318	COLD TRANS	1.87	29.15	775.1	1.43	10.73
					COLD STAB	.85	19.50	635.7	1.55	13.27
IDLE HC,PPM/HEXANE				10.	HOT TRANS	.65	4.52	641.9	1.76	13.63
IDLE CO,PCT (MEAS)				.15						
IDLE CO,PCT (SPEC)				.30	1975 FTP	1.00	17.40	666.1	1.58	12.74
OTHER TESTS: MODAL										
7014	TEST NO. C				COLD TRANS	1.98	30.33	858.2	1.75	9.73
					COLD STAB	.81	17.39	660.0	1.73	12.86
					HOT TRANS	.58	3.72	698.1	2.01	12.58
					1975 FTP	.99	16.32	711.2	1.81	11.99
7015	1975	FORD	F100	300	COLD TRANS	.55	10.39	514.9	1.29	16.65
					COLD STAB	.34	5.65	528.4	1.08	16.49
IDLE HC,PPM/HEXANE				13.	HOT TRANS	.60	7.35	438.9	.94	19.62
IDLE CO,PCT (MEAS)				.03						
IDLE CO,PCT (SPEC)				99.99	1975 FTP	.45	7.09	501.2	1.08	17.27
OTHER TESTS: MODAL										
7015	TEST NO. C				COLD TRANS	.59	8.25	526.0	1.84	16.41
					COLD STAB	.28	4.80	517.5	1.51	16.87
					HOT TRANS	.57	5.76	454.2	1.56	19.09
					1975 FTP	.42	5.77	502.0	1.59	17.32

EMISSION RESULTS IN GRAMS PER MILE
FUEL ECONOMY IN MILES PER GALLON

APPENDIX E

LISTING OF FEDERAL TEST PROCEDURE RESULTS ON INDIVIDUAL VEHICLES

CALIFORNIA

VEHICLE NUMBER	YEAR	MAKE	MODEL	CID	TEST TYPE	HC	CO	CO2	NOXC	FUEL ECONOMY
7016	1975	FORD	F100	360	COLD TRANS	4.47	96.56	630.8	1.59	11.14
					COLD STAB	3.44	99.33	593.6	.65	11.67
IDLE HC,PPM/HEXANE				170.	HOT TRANS	3.49	68.83	536.4	1.01	13.54
IDLE CO,PCT (MEAS)				.10						
IDLE CO,PCT (SPEC)				99.99	1975 FTP	3.67	90.44	585.7	.94	12.00
OTHER TESTS: MODAL										
7016	TEST NO. C				COLD TRANS	4.73	96.90	669.7	1.98	10.60
					COLD STAB	2.98	85.21	611.3	.59	11.76
					HOT TRANS	3.37	65.60	605.8	1.47	12.33
					1975 FTP	3.44	82.26	621.8	1.11	11.65
7017	1975	FORD	E100	351	COLD TRANS	1.70	15.33	799.3	6.07	10.71
					COLD STAB	.80	.59	784.8	3.06	11.26
IDLE HC,PPM/HEXANE				5.	HOT TRANS	.91	2.65	709.7	5.76	12.38
IDLE CO,PCT (MEAS)				.01						
IDLE CO,PCT (SPEC)				99.99	1975 FTP	1.01	4.19	767.3	4.42	11.42
OTHER TESTS: MODAL										
7017	TEST NO. C				COLD TRANS	1.60	16.49	880.5	7.79	9.74
					COLD STAB	.80	.70	796.1	4.06	11.10
					HOT TRANS	.97	4.13	789.4	7.62	11.11
					1975 FTP	1.01	4.88	811.6	5.80	10.79
6018	1976	AMC	PACE	258	COLD TRANS	1.32	26.45	682.8	2.18	12.18
					COLD STAB	.07	2.06	730.8	1.39	12.09
IDLE HC,PPM/HEXANE				18.	HOT TRANS	.64	.94	632.7	1.58	13.95
IDLE CO,PCT (MEAS)				.03						
IDLE CO,PCT (SPEC)				99.99	1975 FTP	.48	6.77	694.2	1.61	12.57
OTHER TESTS: HFET, MODAL, EVAP										
6018	TEST NO. 1				COLD TRANS	1.23	20.98	674.9	2.09	12.47
					COLD STAB	.12	5.92	714.1	1.61	12.26
					HOT TRANS	.45	3.19	622.1	1.98	14.12
					1975 FTP	.44	8.28	680.9	1.81	12.76

EMISSION RESULTS IN GRAMS PER MILE
FUEL ECONOMY IN MILES PER GALLON

APPENDIX E

LISTING OF FEDERAL TEST PROCEDURE RESULTS ON INDIVIDUAL VEHICLES

CALIFORNIA

VEHICLE NUMBER	YEAR	MAKE	MODEL	CID	TEST TYPE	HC	CO	CO2	NOXC	FUEL ECONOMY
6019	1976	BUIC	REGA	350	COLD TRANS	2.17	37.16	692.9	2.72	11.71
					COLD STAB	.23	3.46	695.7	.99	12.65
IDLE HC,PPM/HEXANE				110.	HOT TRANS	.32	3.74	619.1	2.06	14.18
IDLE CO,PCT (MEAS)				.07						
IDLE CO,PCT (SPEC)				99.99	1975 FTP	.65	10.47	674.2	1.64	12.81
OTHER TESTS: HFET, MODAL, EVAP										
6019	TEST NO. 1				COLD TRANS	2.41	34.40	707.3	2.83	11.54
					COLD STAB	.12	.92	711.3	1.17	12.45
					HOT TRANS	.23	4.01	629.3	2.26	13.95
					1975 FTP	.62	8.65	688.1	1.81	12.61
6020	1976	BUIC	REGA	350	COLD TRANS	4.84	40.41	696.6	4.52	11.45
					COLD STAB	.17	1.33	624.4	3.59	14.15
IDLE HC,PPM/HEXANE				80.	HOT TRANS	.50	2.07	545.8	4.65	16.12
IDLE CO,PCT (MEAS)				.15						
IDLE CO,PCT (SPEC)				99.99	1975 FTP	1.22	9.57	617.8	4.07	13.94
6021	1976	CADI	COUP	500	COLD TRANS	1.45	21.00	904.4	2.03	9.42
					COLD STAB	.34	1.45	858.8	1.17	10.29
IDLE HC,PPM/HEXANE				60.	HOT TRANS	.85	2.59	774.3	1.27	11.36
IDLE CO,PCT (MEAS)				.07						
IDLE CO,PCT (SPEC)				99.99	1975 FTP	.70	5.79	845.1	1.37	10.36
6022	1976	CHEV	MONT	350	COLD TRANS	1.39	14.24	669.8	1.93	12.74
					COLD STAB	.19	.04	743.3	1.18	11.93
IDLE HC,PPM/HEXANE				40.	HOT TRANS	.38	.33	453.9	1.26	19.48
IDLE CO,PCT (MEAS)				.04						
IDLE CO,PCT (SPEC)				99.99	1975 FTP	.49	3.04	649.2	1.36	13.54
OTHER TESTS: HFET, MODAL, EVAP										

EMISSION RESULTS IN GRAMS PER MILE
FUEL ECONOMY IN MILES PER GALLON

APPENDIX F

LISTING OF FEDERAL TEST PROCEDURE RESULTS ON INDIVIDUAL VEHICLES

CALIFORNIA

VEHICLE NUMBER	YEAR	MAKE	MODEL	CID	TEST TYPE	HC	CO	CO2	NOXC	FUEL ECONOMY
6022	TEST NO. 1				COLD TRANS	2.15	18.46	806.8	2.23	10.53
					COLD STAB	.25	.08	795.1	1.30	11.15
					HOT TRANS	.19	.78	712.5	2.13	12.43
					1975 FTP	.63	4.05	775.0	1.72	11.33
6022	TEST NO. 2				COLD TRANS	1.39	16.95	736.3	2.10	11.57
					COLD STAB	.21	.04	758.2	1.14	11.70
					HOT TRANS	.33	.84	669.2	1.91	13.22
					1975 FTP	.49	3.74	729.4	1.55	12.05
6022	TEST NO. 3				COLD TRANS	2.97	24.35	784.6	2.12	10.66
					COLD STAB	.21	.33	783.6	1.33	11.31
					HOT TRANS	.25	1.31	679.1	1.91	13.01
					1975 FTP	.79	5.54	755.3	1.65	11.58
6023	1976	CHEV	MONT	350	COLD TRANS	2.78	30.88	803.6	1.90	10.31
					COLD STAB	.27	.67	796.4	.96	11.12
IDLE HC,PPM/HEXANE				15.	HOT TRANS	.31	1.67	736.0	1.78	12.00
IDLE CO,PCT (MEAS)				.02						
IDLE CO,PCT (SPEC)				99.99	1975 FTP	.80	7.16	781.4	1.38	11.16
6024	1976	CHEV	VEGA	140	COLD TRANS	1.88	32.05	463.8	2.21	17.07
					COLD STAB	.76	13.39	467.1	.64	18.09
IDLE HC,PPM/HEXANE				30.	HOT TRANS	.54	9.19	430.3	1.96	19.88
IDLE CO,PCT (MEAS)				.03						
IDLE CO,PCT (SPEC)				99.99	1975 FTP	.93	16.08	456.4	1.32	18.31
OTHER TESTS: HFET, MODAL, EVAP										
6024	TEST NO. 1				COLD TRANS	3.53	27.72	554.0	2.57	14.58
					COLD STAB	.08	.08	508.5	1.05	17.44
					HOT TRANS	.10	.21	464.4	2.44	19.09
					1975 FTP	.80	5.80	505.8	1.74	17.15

EMISSION RESULTS IN GRAMS PER MILE
FUEL ECONOMY IN MILES PER GALLON

APPENDIX E

LISTING OF FEDERAL TEST PROCEDURE RESULTS ON INDIVIDUAL VEHICLES

CALIFORNIA

VEHICLE NUMBER	YEAR	MAKE	MODEL	CID	TEST TYPE	HC	CO	CO2	NOXC	FUEL ECONOMY
6025	1976	CHEV	CAPR	400	COLD TRANS	1.07	9.75	772.9	2.02	11.21
					COLD STAB	.44	.04	780.0	1.24	11.36
IDLE HC,PPM/HEXANE				150.	HOT TRANS	.67	1.17	690.4	1.76	12.78
IDLE CO,PCT (MEAS)				2.10						
IDLE CO,PCT (SPEC)				99.99	1975 FTP	.63	2.35	754.1	1.54	11.68
6026	1976	CHEV	CAMA	305	COLD TRANS	3.78	51.36	703.3	2.01	11.15
					COLD STAB	.16	.70	778.7	1.27	11.37
IDLE HC,PPM/HEXANE				40.	HOT TRANS	.34	5.99	656.0	1.59	13.32
IDLE CO,PCT (MEAS)				.08						
IDLE CO,PCT (SPEC)				99.99	1975 FTP	.96	12.57	729.7	1.51	11.79
OTHER TESTS: HFET, MODAL, EVAP										
6026	TEST NO. 1				COLD TRANS	3.12	48.89	736.8	1.99	10.78
					COLD STAB	.15	2.48	798.8	1.37	11.05
					HOT TRANS	.34	2.29	682.5	2.10	12.92
					1975 FTP	.81	11.98	754.3	1.70	11.44
6027	1976	CHEV	NOVA	250	COLD TRANS	2.04	29.95	664.1	2.55	12.37
					COLD STAB	.28	.08	660.9	.94	13.41
IDLE HC,PPM/HEXANE				30.	HOT TRANS	.38	.38	604.4	1.82	14.64
IDLE CO,PCT (MEAS)				2.20						
IDLE CO,PCT (SPEC)				99.99	1975 FTP	.67	6.31	646.2	1.51	13.48
6028	1976	CHEV	CHEV	85	COLD TRANS	.82	10.84	377.1	2.04	22.37
					COLD STAB	.30	1.12	419.6	1.14	21.02
IDLE HC,PPM/HEXANE				25.	HOT TRANS	.32	2.10	351.7	1.68	24.93
IDLE CO,PCT (MEAS)				.02						
IDLE CO,PCT (SPEC)				99.99	1975 FTP	.41	3.39	392.3	1.47	22.25

EMISSION RESULTS IN GRAMS PER MILE
FUEL ECONOMY IN MILES PER GALLON

APPENDIX E

LISTING OF FEDERAL TEST PROCEDURE RESULTS ON INDIVIDUAL VEHICLES

CALIFORNIA

VEHICLE NUMBER	YEAR	MAKE	MODEL	CID	TEST TYPE	HC	CO	CO2	NOXC	FUEL ECONOMY
6029	1976	DODG	ASPE	318	COLD TRANS	1.70	13.45	774.0	1.29	11.09
					COLD STAB	.17	.88	664.5	1.47	13.32
IDLE HC,PPM/HEXANE				25.	HOT TRANS	.48	2.93	654.0	1.38	13.44
IDLE CO,PCT (MEAS)				.07						
IDLE CO,PCT (SPEC)				99.99	1975 FTP	.57	4.03	684.2	1.41	12.82
OTHER TESTS: HFET, MODAL, EVAP										
6029	TEST NO. 1				COLD TRANS	2.39	23.05	781.9	1.46	10.75
					COLD STAB	.17	6.46	699.7	1.70	12.49
					HOT TRANS	.40	4.06	640.4	1.73	13.70
					1975 FTP	.69	9.22	700.4	1.66	12.38
6030	1976	DODG	ASPE	225	COLD TRANS	.77	23.50	641.5	2.33	13.03
					COLD STAB	.15	.52	596.6	1.84	14.84
IDLE HC,PPM/HEXANE				55.	HOT TRANS	.94	8.02	556.5	2.34	15.51
IDLE CO,PCT (MEAS)				.85						
IDLE CO,PCT (SPEC)				.50	1975 FTP	.49	7.29	594.9	2.08	14.60
6031	1976	FORD	PINT	140	COLD TRANS	1.34	24.85	457.1	1.77	17.74
					COLD STAB	.46	.26	434.1	1.13	20.36
IDLE HC,PPM/HEXANE				13.	HOT TRANS	.46	.93	393.8	1.97	22.37
IDLE CO,PCT (MEAS)				.03						
IDLE CO,PCT (SPEC)				99.99	1975 FTP	.64	5.50	427.8	1.49	20.24
OTHER TESTS: HFET, MODAL, EVAP										
6031	TEST NO. 1				COLD TRANS	1.48	25.73	482.4	1.93	16.83
					COLD STAB	.37	.37	448.5	1.09	19.71
					HOT TRANS	.50	1.57	398.2	1.96	22.06
					1975 FTP	.63	5.92	441.8	1.50	19.59
6032	1976	FORD	LTD	400	COLD TRANS	.87	10.49	891.5	1.33	9.74
					COLD STAB	.30	1.04	906.9	.81	9.76
IDLE HC,PPM/HEXANE				30.	HOT TRANS	.48	3.99	769.1	1.37	11.42
IDLE CO,PCT (MEAS)				.02						
IDLE CO,PCT (SPEC)				99.99	1975 FTP	.47	3.79	866.2	1.07	10.16

EMISSION RESULTS IN GRAMS PER MILE
FUEL ECONOMY IN MILES PER GALLON

APPENDIX E

LISTING OF FEDERAL TEST PROCEDURE RESULTS ON INDIVIDUAL VEHICLES

CALIFORNIA

VEHICLE NUMBER	YEAR	MAKE	MODEL	CID	TEST TYPE	HC	CO	CO2	NOXC	FUEL ECONOMY
6033	1976	FORD	GRAN	302	COLD TRANS	2.86	30.41	654.9	1.73	12.47
					COLD STAB	.70	.92	633.7	.88	13.92
IDLE HC,PPM/HEXANE			525.		HOT TRANS	.93	1.98	576.0	1.65	15.25
IDLE CO,PCT (MEAS)			8.40							
IDLE CO,PCT (SPEC)			99.99		1975 FTP	1.21	7.28	622.3	1.27	13.92
OTHER TESTS: HFET, MODAL, EVAP										
6033	TEST NO. 1				COLD TRANS	2.17	27.22	654.7	1.90	12.60
					COLD STAB	.70	5.23	651.4	.94	13.41
					HOT TRANS	.72	2.13	569.6	1.86	15.43
					1975 FTP	1.01	8.91	629.7	1.39	13.72
6033	TEST NO. 2				COLD TRANS	2.11	21.62	661.7	2.01	12.64
					COLD STAB	.75	5.24	671.5	.95	13.01
					HOT TRANS	.81	3.82	610.5	1.74	14.34
					1975 FTP	1.05	8.22	652.8	1.38	13.26
6033	TEST NO. 3				COLD TRANS	2.49	29.95	644.8	1.72	12.68
					COLD STAB	.77	2.27	642.3	.81	13.69
					HOT TRANS	.86	1.65	574.0	1.51	15.32
					1975 FTP	1.15	7.80	624.2	1.19	13.87
6034	1976	FORD	GRAN	250	COLD TRANS	.63	17.03	680.5	4.22	12.51
					COLD STAB	.14	2.02	643.3	2.79	13.72
IDLE HC,PPM/HEXANE			25.		HOT TRANS	.26	5.23	578.3	4.38	15.11
IDLE CO,PCT (MEAS)			.02							
IDLE CO,PCT (SPEC)			99.99		1975 FTP	.27	5.99	633.2	3.52	13.79
6035	1976	FORD	GRAN	302	COLD TRANS	1.74	32.06	817.7	1.14	10.16
					COLD STAB	.49	.78	855.5	.88	10.34
IDLE HC,PPM/HEXANE			25.		HOT TRANS	.87	2.65	751.9	1.13	11.70
IDLE CO,PCT (MEAS)			.02							
IDLE CO,PCT (SPEC)			99.99		1975 FTP	.85	7.73	819.4	1.00	10.64
OTHER TESTS: HFET, MODAL, EVAP										

EMISSION RESULTS IN GRAMS PER MILE
FUEL ECONOMY IN MILES PER GALLON

APPENDIX E

LISTING OF FEDERAL TEST PROCEDURE RESULTS ON INDIVIDUAL VEHICLES

CALIFORNIA

VEHICLE NUMBER	YEAR	MAKE	MODEL	CID	TEST TYPE	HC	CO	CO2	NOXC	FUEL ECONOMY
6035	TEST NO. 1				COLD TRANS	1.77	27.92	827.0	1.21	10.13
					COLD STAB	.50	.63	879.5	.90	10.06
					HOT TRANS	.54	2.08	746.4	1.21	11.81
					1975 FTP	.77	6.64	832.4	1.05	10.50
6036	1976	FORD	ELIT	351	COLD TRANS	1.26	16.06	836.4	1.06	10.25
					COLD STAB	.49	1.82	775.0	.85	11.39
IDLE HC,PPM/HEXANE			90.		HOT TRANS	.63	4.71	712.5	1.42	12.30
IDLE CO,PCT (MEAS)			1.70							
IDLE CO,PCT (SPEC)			99.99		1975 FTP	.68	5.54	770.6	1.05	11.36
6037	1976	MERC	MONG	351	COLD TRANS	.96	17.37	913.8	1.27	9.40
					COLD STAB	.37	2.93	851.8	1.29	10.35
IDLE HC,PPM/HEXANE			20.		HOT TRANS	.59	8.99	774.8	1.47	11.22
IDLE CO,PCT (MEAS)			.10							
IDLE CO,PCT (SPEC)			99.99		1975 FTP	.55	7.56	843.6	1.34	10.35
OTHER TESTS: HFET, MODAL, EVAP										
6037	TEST NO. 1				COLD TRANS	1.03	28.22	918.7	1.33	9.18
					COLD STAB	.37	8.85	894.8	1.22	9.75
					HOT TRANS	.66	20.03	789.3	1.45	10.79
					1975 FTP	.59	15.89	870.9	1.30	9.89
6038	1976	MERC	BOBC	140	COLD TRANS	.87	2.78	446.1	2.19	19.58
					COLD STAB	.33	.63	476.0	1.42	18.57
IDLE HC,PPM/HEXANE			10.		HOT TRANS	.51	1.54	375.4	2.09	23.39
IDLE CO,PCT (MEAS)			.05							
IDLE CO,PCT (SPEC)			99.99		1975 FTP	.49	1.32	442.4	1.77	19.90
OTHER TESTS: HFET, MODAL, EVAP										
6038	TEST NO. I				COLD TRANS	.76	2.97	458.0	2.06	19.08
					COLD STAB	.32	.89	500.4	1.35	17.65
					HOT TRANS	.50	1.85	410.8	2.06	21.37
					1975 FTP	.46	1.58	467.2	1.69	18.84

EMISSION RESULTS IN GRAMS PER MILE
FUEL ECONOMY IN MILES PER GALLON

APPENDIX E

LISTING OF FEDERAL TEST PROCEDURE RESULTS ON INDIVIDUAL VEHICLES

CALIFORNIA

VEHICLE NUMBER	YEAR	MAKE	MODEL	CID	TEST TYPE	HC	CO	CO2	NOXC	FUEL ECONOMY
6039	1976	OLDS	OMEG	250	COLD TRANS	1.57	9.43	611.2	2.45	14.07
					COLD STAB	.60	0.00	607.1	.99	14.58
IDLE HC,PPM/HEXANE				30.	HOT TRANS	.81	.43	559.2	1.66	15.78
IDLE CO,PCT (MEAS)				.05						
IDLE CO,PCT (SPEC)				99.99	1975 FTP	.85	2.06	594.9	1.47	14.77
6040	1976	OLDS	CUTL	350	COLD TRANS	1.09	7.37	737.0	1.85	11.80
					COLD STAB	.19	.99	707.9	.78	12.50
IDLE HC,PPM/HEXANE				60.	HOT TRANS	.36	1.31	628.2	1.58	14.06
IDLE CO,PCT (MEAS)				.10						
IDLE CO,PCT (SPEC)				99.99	1975 FTP	.42	2.39	692.2	1.22	12.73
6041	1976	OLDS	VIST	455	COLD TRANS	1.61	11.94	822.1	1.72	10.49
					COLD STAB	.16	.09	702.3	.83	12.63
IDLE HC,PPM/HEXANE				210.	HOT TRANS	.29	1.24	626.7	1.53	14.10
IDLE CO,PCT (MEAS)				4.60						
IDLE CO,PCT (SPEC)				99.99	1975 FTP	.49	2.84	706.3	1.20	12.46
OTHER TESTS: HFET, MODAL, EVAP										
6041	TEST NO. 1				COLD TRANS	3.21	23.36	878.1	3.43	9.60
					COLD STAB	.10	.08	772.6	1.24	11.48
					HOT TRANS	.17	1.14	749.8	3.17	11.80
					1975 FTP	.76	5.16	788.1	2.22	11.11
6042	1976	PLYM	VOLA	225	COLD TRANS	2.45	24.38	677.0	1.58	12.28
					COLD STAB	.25	.92	635.7	1.06	13.91
IDLE HC,PPM/HEXANE				20.	HOT TRANS	.84	2.76	597.9	1.62	14.67
IDLE CO,PCT (MEAS)				.02						
IDLE CO,PCT (SPEC)				.50	1975 FTP	.86	6.25	633.9	1.32	13.73
OTHER TESTS: HFET, MODAL, EVAP										

EMISSION RESULTS IN GRAMS PER MILE
FUEL ECONOMY IN MILES PER GALLON

APPENDIX E

LISTING OF FEDERAL TEST PROCEDURE RESULTS ON INDIVIDUAL VEHICLES

CALIFORNIA

VEHICLE NUMBER	YEAR	MAKE	MODEL	CID	TEST TYPE	HC	CO	CO2	NOXC	FUEL ECONOMY
6042	TEST NO. 1				COLD TRANS	2.60	34.31	707.8	1.63	11.53
					COLD STAB	.81	2.05	663.9	1.16	13.25
					HOT TRANS	.28	2.92	629.2	1.63	13.98
					1975 FTP	1.03	8.93	663.5	1.39	13.04
6043	1976	PLYM	VOLA	318	COLD TRANS	10.45	100.98	744.5	.92	9.48
					COLD STAB	.10	.33	704.2	1.48	12.59
IDLE HC,PPM/HEXANE				30.	HOT TRANS	.80	17.66	643.4	1.48	13.17
IDLE CO,PCT (MEAS)				.05						
IDLE CO,PCT (SPEC)				.30	1975 FTP	2.42	25.78	695.9	1.36	11.93
OTHER TESTS: HFET, MODAL, EVAP										
6043	TEST NO. 1				COLD TRANS	7.94	107.85	778.8	.94	9.12
					COLD STAB	.10	.27	743.7	1.69	11.92
					HOT TRANS	.66	21.23	681.1	1.46	12.39
					1975 FTP	1.87	28.13	733.9	1.47	11.32
6044	1976	PONT	FIRE	350	COLD TRANS	2.01	33.56	680.2	1.84	12.00
					COLD STAB	.35	1.19	676.9	.98	13.05
IDLE HC,PPM/HEXANE				135.	HOT TRANS	.43	3.31	667.7	1.93	13.16
IDLE CO,PCT (MEAS)				1.35						
IDLE CO,PCT (SPEC)				99.99	1975 FTP	.72	8.43	675.1	1.42	12.85
6045	1976	PONT	GRNP	400	COLD TRANS	1.84	17.82	770.1	1.97	11.04
					COLD STAB	.26	.01	686.5	1.63	12.91
IDLE HC,PPM/HEXANE				100.	HOT TRANS	.38	3.58	629.8	2.31	13.94
IDLE CO,PCT (MEAS)				.01						
IDLE CO,PCT (SPEC)				99.99	1975 FTP	.62	4.65	688.3	1.89	12.72
OTHER TESTS: HFET, MODAL, EVAP										
6045	TEST NO. 1				COLD TRANS	1.92	25.58	818.0	2.40	10.27
					COLD STAB	.17	.04	723.3	1.99	12.26
					HOT TRANS	.23	2.05	663.2	3.18	13.30
					1975 FTP	.55	5.85	726.4	2.40	12.04

EMISSION RESULTS IN GRAMS PER MILE
FUEL ECONOMY IN MILES PER GALLON

APPENDIX F

LISTING OF FEDERAL TEST PROCEDURE RESULTS ON INDIVIDUAL VEHICLES

CALIFORNIA

VEHICLE NUMBER	YEAR	MAKE	MODEL	CID	TEST TYPE	HC	CO	CO2	NOXC	FUEL ECONOMY
6046	1976	DATS	B210	85	COLD TRANS	.69	11.95	356.5	2.56	23.51
					COLD STAB	.22	1.33	373.5	1.49	23.59
IDLE HC,PPM/HEXANE				20.	HOT TRANS	.37	2.66	308.4	2.28	28.29
IDLE CO,PCT (MEAS)				.02						
IDLE CO,PCT (SPEC)				2.00	1975 FTP	.36	3.88	352.2	1.93	24.69
6047	1976	DATS	610	119	COLD TRANS	1.21	18.92	478.4	2.59	17.34
					COLD STAB	.35	4.94	418.1	1.34	20.79
IDLE HC,PPM/HEXANE				112.	HOT TRANS	.58	3.42	398.0	2.31	21.90
IDLE CO,PCT (MEAS)				2.70						
IDLE CO,PCT (SPEC)				2.00	1975 FTP	.59	7.40	425.0	1.86	20.24
OTHER TESTS: HFET, MODAL, EVAP										
6047	TEST NO. 1				COLD TRANS	.85	12.89	476.3	2.92	17.78
					COLD STAB	.35	8.07	411.0	1.50	20.89
					HOT TRANS	.42	4.71	397.2	2.40	21.86
					1975 FTP	.47	8.15	420.7	2.04	20.40
6048	1976	TOYO	CORR	97	COLD TRANS	.63	7.91	453.2	2.64	18.98
					COLD STAB	.16	1.03	506.4	1.03	17.46
IDLE HC,PPM/HEXANE				20.	HOT TRANS	.15	1.47	406.5	2.00	21.69
IDLE CO,PCT (MEAS)				.02						
IDLE CO,PCT (SPEC)				99.99	1975 FTP	.25	2.57	468.2	1.63	18.76
OTHER TESTS: HFET, MODAL, EVAP										
6048	TEST NO. 1				COLD TRANS	1.04	11.38	446.8	2.30	18.97
					COLD STAB	.21	1.70	512.5	.99	17.21
					HOT TRANS	.11	1.94	417.5	2.04	21.09
					1975 FTP	.35	3.76	473.1	1.55	18.49
6049	1976	TOYO	CORO	133	COLD TRANS	1.75	30.55	510.6	1.85	15.73
					COLD STAB	.17	.15	454.7	.87	19.49
IDLE HC,PPM/HEXANE				85.	HOT TRANS	.16	3.89	429.6	1.82	20.35
IDLE CO,PCT (MEAS)				1.55						
IDLE CO,PCT (SPEC)				99.99	1975 FTP	.49	7.43	459.3	1.33	18.78
OTHER TESTS: HFET, MODAL, EVAP										

EMISSION RESULTS IN GRAMS PER MILE
FUEL ECONOMY IN MILES PER GALLON

APPENDIX E

LISTING OF FEDERAL TEST PROCEDURE RESULTS ON INDIVIDUAL VEHICLES

CALIFORNIA

VEHICLE NUMBER	YEAR	MAKE	MODEL	CID	TEST TYPE	HC	CO	CO2	NOXC	FUEL ECONOMY
6049	TEST NO. 1				COLD TRANS	.96	23.16	541.1	2.10	15.29
					COLD STAB	.14	.22	521.5	.95	16.99
					HOT TRANS	.15	4.28	461.0	2.10	18.95
					1975 FTP	.31	6.05	509.1	1.50	17.08
6050	1976	VOLK	SEDA	97	COLD TRANS	1.26	22.41	354.5	1.98	22.55
					COLD STAB	.41	9.57	394.3	.79	21.61
IDLE HC,PPM/HEXANE			25.		HOT TRANS	.52	7.45	327.6	1.62	26.03
IDLE CO,PCT (MEAS)			.45							
IDLE CO,PCT (SPEC)			99.99		1975 FTP	.61	11.63	367.9	1.26	22.87
OTHER TESTS: HFET, MODAL, EVAP										
6050	TEST NO. 1				COLD TRANS	1.64	19.15	365.8	2.16	22.13
					COLD STAB	.28	6.32	411.9	1.14	21.00
					HOT TRANS	.55	7.19	336.0	1.76	25.43
					1975 FTP	.63	9.20	381.7	1.52	22.29
6051	1976	VOLK	SCIR	97	COLD TRANS	3.34	125.21	274.2	.40	18.43
					COLD STAB	1.44	35.76	347.2	.60	21.75
IDLE HC,PPM/HEXANE			90.		HOT TRANS	.21	4.39	308.2	.76	28.11
IDLE CO,PCT (MEAS)			2.90							
IDLE CO,PCT (SPEC)			.30		1975 FTP	1.49	45.61	321.5	.61	22.30
OTHER TESTS: HFET, MODAL, EVAP										
6051	TEST NO. 1				COLD TRANS	3.96	127.15	277.0	.55	18.14
					COLD STAB	1.64	41.92	360.0	.93	20.59
					HOT TRANS	.65	7.96	312.6	.40	27.13
					1975 FTP	1.85	50.20	329.9	.71	21.40
5052	1975	AMC	PACE	258	COLD TRANS	.64	18.01	595.4	2.04	14.18
					COLD STAB	.22	3.85	526.8	1.82	16.63
IDLE HC,PPM/HEXANE			35.		HOT TRANS	.70	3.60	515.4	1.81	16.96
IDLE CO,PCT (MEAS)			.03							
IDLE CO,PCT (SPEC)			99.99		1975 FTP	.44	6.70	537.8	1.86	16.14
OTHER TESTS: MODAL										

EMISSION RESULTS IN GRAMS PER MILE
FUEL ECONOMY IN MILES PER GALLON

APPENDIX E

LISTING OF FEDERAL TEST PROCEDURE RESULTS ON INDIVIDUAL VEHICLES

CALIFORNIA

VEHICLE NUMBER	YEAR	MAKE	MODEL	CID	TEST TYPE	HC	CO	CO2	NOXC	FUEL ECONOMY
5053	1975	BUIC	REGA	350	COLD TRANS	2.38	37.67	776.9	2.36	10.52
					COLD STAB	.56	8.41	748.1	1.55	11.63
IDLE HC,PPM/HEXANE				300.	HOT TRANS	.72	10.66	670.2	2.32	12.88
IDLE CO,PCT (MEAS)				2.20						
IDLE CO,PCT (SPEC)				99.99	1975 FTP	.98	15.05	732.8	1.93	11.69
OTHER TESTS: MODAL										
5054	1975	BUIC	REGA	350	COLD TRANS	2.11	36.74	829.4	2.67	9.93
					COLD STAB	.95	19.89	781.3	1.37	10.88
IDLE HC,PPM/HEXANE				75.	HOT TRANS	.82	8.41	748.7	2.27	11.61
IDLE CO,PCT (MEAS)				.11						
IDLE CO,PCT (SPEC)				99.99	1975 FTP	1.15	20.23	782.3	1.88	10.85
OTHER TESTS: MODAL										
5055	1975	CADI	DEVI	500	COLD TRANS	1.84	36.11	964.3	1.32	8.64
					COLD STAB	.48	.54	796.2	2.37	11.11
IDLE HC,PPM/HEXANE				200.	HOT TRANS	.65	3.18	777.4	1.68	11.31
IDLE CO,PCT (MEAS)				.07						
IDLE CO,PCT (SPEC)				99.99	1975 FTP	.81	8.58	825.7	1.96	10.54
OTHER TESTS: MODAL										
5056	1975	CHEV	MONZ	140	COLD TRANS	1.80	14.20	460.6	2.37	18.16
					COLD STAB	.68	3.42	492.9	1.44	17.74
IDLE HC,PPM/HEXANE				35.	HOT TRANS	1.17	3.53	409.0	2.21	21.22
IDLE CO,PCT (MEAS)				.04						
IDLE CO,PCT (SPEC)				99.99	1975 FTP	1.04	5.67	463.4	1.84	18.66
OTHER TESTS: MODAL										
5057	1975	CHEV	MALI	350	COLD TRANS	2.69	63.32	485.3	2.09	14.96
					COLD STAB	.39	.74	536.1	1.20	16.48
IDLE HC,PPM/HEXANE				10.	HOT TRANS	.44	2.18	467.1	2.17	18.81
IDLE CO,PCT (MEAS)				.03						
IDLE CO,PCT (SPEC)				99.99	1975 FTP	.88	14.01	506.8	1.65	16.70
OTHER TESTS: MODAL										

EMISSION RESULTS IN GRAMS PER MILE
FUEL ECONOMY IN MILES PER GALLON

APPENDIX E

LISTING OF FEDERAL TEST PROCEDURE RESULTS ON INDIVIDUAL VEHICLES

CALIFORNIA

VEHICLE NUMBER	YEAR	MAKE	MODEL	CID	TEST TYPE	HC	CO	CO2	NOXC	FUEL ECONOMY
5058	1975	CHEV	IMPA	350	COLD TRANS	1.34	9.98	858.0	3.06	10.11
					COLD STAB	.20	.01	850.0	1.97	10.43
IDLE HC,PPM/HEXANE				10.	HOT TRANS	.43	1.53	767.5	3.03	11.51
IDLE CO,PCT (MEAS)				.01						
IDLE CO,PCT (SPEC)				99.99	1975 FTP	.50	2.48	829.1	2.49	10.63
OTHER TESTS: MODAL										
5059	1975	CHEV	IMPA	400	COLD TRANS	1.36	9.70	867.5	2.15	10.01
					COLD STAB	.46	.29	865.3	1.07	10.23
IDLE HC,PPM/HEXANE				70.	HOT TRANS	.59	3.43	750.8	1.73	11.71
IDLE CO,PCT (MEAS)				.03						
IDLE CO,PCT (SPEC)				99.99	1975 FTP	.68	3.09	834.5	1.47	10.55
OTHER TESTS: MODAL										
5060	1975	CHEV	NOVA	250	COLD TRANS	2.91	29.67	575.9	2.03	14.05
					COLD STAB	.54	.45	576.5	.61	15.33
IDLE HC,PPM/HEXANE				140.	HOT TRANS	.67	1.22	513.5	1.10	17.15
IDLE CO,PCT (MEAS)				3.70						
IDLE CO,PCT (SPEC)				99.99	1975 FTP	1.06	6.68	559.2	1.04	15.49
OTHER TESTS: MODAL										
5061	1975	CHRY	CORD	360	COLD TRANS	1.29	41.72	850.2	1.36	9.65
					COLD STAB	.07	.42	791.7	1.90	11.20
IDLE HC,PPM/HEXANE				3.	HOT TRANS	.29	1.20	708.3	1.85	12.48
IDLE CO,PCT (MEAS)				.02						
IDLE CO,PCT (SPEC)				.50	1975 FTP	.38	9.13	781.0	1.77	11.14
OTHER TESTS: MODAL										
5062	1975	DODG	DART	318	COLD TRANS	1.12	8.93	756.6	1.52	11.46
					COLD STAB	.21	.07	629.1	1.48	14.09
IDLE HC,PPM/HEXANE				20.	HOT TRANS	.34	.79	596.9	1.34	14.81
IDLE CO,PCT (MEAS)				.02						
IDLE CO,PCT (SPEC)				.50	1975 FTP	.43	2.09	646.6	1.45	13.63
OTHER TESTS: MODAL										

EMISSION RESULTS IN GRAMS PER MILE
FUEL ECONOMY IN MILES PER GALLON

APPENDIX E

LISTING OF FEDERAL TEST PROCEDURE RESULTS ON INDIVIDUAL VEHICLES

CALIFORNIA

VEHICLE NUMBER	YEAR	MAKE	MODEL	CID	TEST TYPE	HC	CO	CO2	NOXC	FUEL ECONOMY
5063	1975	FORD	PINT	140	COLD TRANS	.61	6.73	426.2	1.76	20.23
					COLD STAB	.17	.19	446.0	1.01	19.86
IDLE HC,PPM/HEXANE				150.	HOT TRANS	.20	.68	368.0	1.84	24.00
IDLE CO,PCT (MEAS)				2.00						
IDLE CO,PCT (SPEC)				1.50	1975 FTP	.27	1.67	420.6	1.39	20.93
OTHER TESTS: MODAL										
5064	1975	FORD	LTD	351	COLD TRANS	.65	9.07	958.2	1.74	9.11
					COLD STAB	.23	1.73	987.3	.93	8.96
IDLE HC,PPM/HEXANE				15.	HOT TRANS	.37	2.82	824.9	1.70	10.69
IDLE CO,PCT (MEAS)				.25						
IDLE CO,PCT (SPEC)				99.99	1975 FTP	.35	3.54	937.0	1.30	9.41
OTHER TESTS: MODAL										
5065	1975	FORD	LTD	460	COLD TRANS	1.14	37.66	1078.5	.98	7.78
					COLD STAB	.14	9.99	1113.4	.74	7.86
IDLE HC,PPM/HEXANE				15.	HOT TRANS	2.19	17.46	1006.6	1.00	8.53
IDLE CO,PCT (MEAS)				.02						
IDLE CO,PCT (SPEC)				99.99	1975 FTP	.91	17.72	1077.1	.86	8.01
OTHER TESTS: MODAL										
5066	1975	FORD	GRAN	250	COLD TRANS	1.35	20.95	771.6	7.28	10.97
					COLD STAB	.45	.67	599.4	4.34	14.75
IDLE HC,PPM/HEXANE				15.	HOT TRANS	.56	5.96	624.4	6.78	13.97
IDLE CO,PCT (MEAS)				.02						
IDLE CO,PCT (SPEC)				99.99	1975 FTP	.66	6.29	641.6	5.61	13.58
OTHER TESTS: MODAL										
5067	1975	FORD	GRAN	302	COLD TRANS	3.28	107.83	745.8	.80	9.59
					COLD STAB	.43	2.20	812.4	.94	10.86
IDLE HC,PPM/HEXANE				32.	HOT TRANS	.90	5.96	719.8	1.06	12.12
IDLE CO,PCT (MEAS)				.04						
IDLE CO,PCT (SPEC)				99.99	1975 FTP	1.15	24.97	773.4	.94	10.87
OTHER TESTS: MODAL										

EMISSION RESULTS IN GRAMS PER MILE
FUEL ECONOMY IN MILES PER GALLON

APPENDIX E

LISTING OF FEDERAL TEST PROCEDURE RESULTS ON INDIVIDUAL VEHICLES

CALIFORNIA

VEHICLE NUMBER	YEAR	MAKE	MODEL	CID	TEST TYPE	HC	CO	CO2	NOXC	FUEL ECONOMY
5068	1975	MERC	MONT	400	COLD TRANS	3.03	29.09	924.1	1.55	9.06
					COLD STAB.	1.07	19.20	909.5	.70	9.41
IDLE HC,PPM/HEXANE				110.	HOT TRANS	1.05	10.87	801.4	1.11	10.80
IDLE CO,PCT (MEAS)				1.25						
IDLE CO,PCT (SPEC)				99.99	1975 FTP	1.47	18.96	883.0	.99	9.67
OTHER TESTS: MODAL										
5069	1975	OLDS	CUTL	350	COLD TRANS	1.98	11.05	796.3	2.27	10.82
					COLD STAB	.28	.07	744.2	1.24	11.91
IDLE HC,PPM/HEXANE				250.	HOT TRANS	.36	1.59	666.1	2.11	13.25
IDLE CO,PCT (MEAS)				.50						
IDLE CO,PCT (SPEC)				99.99	1975 FTP	.65	2.75	733.6	1.69	11.99
OTHER TESTS: MODAL										
5070	1975	OLDS	DELT	455	COLD TRANS	1.62	13.96	990.9	2.54	8.72
					COLD STAB	.25	4.29	923.3	1.23	9.53
IDLE HC,PPM/HEXANE				60.	HOT TRANS	.40	7.11	871.3	2.09	10.04
IDLE CO,PCT (MEAS)				.05						
IDLE CO,PCT (SPEC)				99.99	1975 FTP	.57	7.05	923.0	1.73	9.48
OTHER TESTS: MODAL										
5071	1975	PLYM	DUST	225	COLD TRANS	2.64	14.31	568.3	6.86	14.81
					COLD STAB	.08	.15	516.1	2.67	17.18
IDLE HC,PPM/HEXANE				15.	HOT TRANS	.19	.77	480.8	6.50	18.39
IDLE CO,PCT (MEAS)				.03						
IDLE CO,PCT (SPEC)				1.50	1975 FTP	.64	3.23	517.2	4.58	16.93
OTHER TESTS: MODAL										
5072	1975	PLYM	STAW	360	COLD TRANS	1.70	41.99	865.9	.47	9.47
					COLD STAB	.06	.54	760.7	1.25	11.65
IDLE HC,PPM/HEXANE				20.	HOT TRANS	.34	8.00	639.9	1.81	13.58
IDLE CO,PCT (MEAS)				.03						
IDLE CO,PCT (SPEC)				.50	1975 FTP	.47	11.11	749.4	1.24	11.55
OTHER TESTS: MODAL										

EMISSION RESULTS IN GRAMS PER MILE
FUEL ECONOMY IN MILES PER GALLON

APPENDIX E

LISTING OF FEDERAL TEST PROCEDURE RESULTS ON INDIVIDUAL VEHICLES

CALIFORNIA

VEHICLE NUMBER	YEAR	MAKE	MODEL	CID	TEST TYPE	HC	CO	CO2	NOXC	FUEL ECONOMY
5073	1975	PONT	CATA	400	COLD TRANS	1.52	10.86	911.7	1.82	9.51
					COLD STAB	.21	.78	764.8	1.32	11.58
IDLE HC,PPM/HEXANE				50.	HOT TRANS	.96	2.12	734.2	1.61	11.98
IDLE CO,PCT (MEAS)				.04						
IDLE CO,PCT (SPEC)				99.99	1975 FTP	.69	3.22	786.7	1.50	11.18
OTHER TESTS: MODAL										
5074	1975	PONT	LEMA	350	COLD TRANS	2.56	19.86	688.4	4.92	12.20
					COLD STAB	.37	0.00	657.0	3.49	13.49
IDLE HC,PPM/HEXANE				100.	HOT TRANS	.49	.98	589.2	5.42	14.99
IDLE CO,PCT (MEAS)				.08						
IDLE CO,PCT (SPEC)				99.99	1975 FTP	.85	4.35	645.0	4.31	13.56
OTHER TESTS: MODAL										
5075	1975	DATS	B210	85	COLD TRANS	.73	11.19	376.3	2.94	22.40
					COLD STAB	.30	2.20	334.4	1.52	26.20
IDLE HC,PPM/HEXANE				76.	HOT TRANS	.44	3.14	330.8	2.44	26.33
IDLE CO,PCT (MEAS)				.50						
IDLE CO,PCT (SPEC)				2.00	1975 FTP	.42	4.30	342.0	2.06	25.35
OTHER TESTS: MODAL										
5076	1975	TOYO	CORO	133	COLD TRANS	.80	9.09	506.8	2.34	16.95
					COLD STAB	.08	.96	560.3	.89	15.79
IDLE HC,PPM/HEXANE				110.	HOT TRANS	.17	1.41	447.1	2.39	19.73
IDLE CO,PCT (MEAS)				1.20						
IDLE CO,PCT (SPEC)				99.99	1975 FTP	.25	2.76	518.4	1.60	16.95
OTHER TESTS: MODAL										
5077	1975	TOYO	CORO	97	COLD TRANS	.63	6.19	412.2	3.56	20.94
					COLD STAB	.08	1.43	486.8	1.25	18.14
IDLE HC,PPM/HEXANE				95.	HOT TRANS	.20	1.89	382.6	2.95	22.98
IDLE CO,PCT (MEAS)				.65						
IDLE CO,PCT (SPEC)				99.99	1975 FTP	.22	2.54	443.0	2.19	19.83
OTHER TESTS: MODAL										

EMISSION RESULTS IN GRAMS PER MILE
FUEL ECONOMY IN MILES PER GALLON

APPENDIX E

LISTING OF FEDERAL TEST PROCEDURE RESULTS ON INDIVIDUAL VEHICLES

CALIFORNIA

VEHICLE NUMBER	YEAR	MAKE	MODEL	CID	TEST TYPE	HC	CO	CO2	NOXC	FUEL ECONOMY
5078	1975	VOLK	SEDA	97	COLD TRANS	1.30	20.42	366.3	2.76	22.05
					COLD STAB	.61	10.16	386.1	1.49	21.97
IDLE HC,PPM/HEXANE				120.	HOT TRANS	.53	5.53	330.6	2.64	26.03
IDLE CO,PCT (MEAS)				1.55						
IDLE CO,PCT (SPEC)				2.00	1975 FTP	.73	11.01	366.9	2.07	22.96
OTHER TESTS: MODAL										
5079	1975	VOLK	RABB	90	COLD TRANS	.60	7.38	410.2	2.35	20.95
					COLD STAB	.15	.15	380.3	2.32	23.29
IDLE HC,PPM/HEXANE				15.	HOT TRANS	.48	1.02	365.7	2.69	24.07
IDLE CO,PCT (MEAS)				.01						
IDLE CO,PCT (SPEC)				2.00	1975 FTP	.33	1.88	382.5	2.43	22.96
OTHER TESTS: MODAL										
4080	1974	AMC	MATA	304	COLD TRANS	27.85	220.13	599.0	1.80	8.59
					COLD STAB	20.11	34.43	731.7	2.86	10.45
IDLE HC,PPM/HEXANE				425.	HOT TRANS	9.32	35.66	652.1	2.92	12.03
IDLE CO,PCT (MEAS)				.20						
IDLE CO,PCT (SPEC)				.75	1975 FTP	18.76	72.99	682.7	2.66	10.36
OTHER TESTS: MODAL										
4081	1974	BUIC	LESA	455	COLD TRANS	4.31	25.44	870.1	3.74	9.61
					COLD STAB	2.90	8.74	809.2	2.02	10.67
IDLE HC,PPM/HEXANE				75.	HOT TRANS	3.16	9.79	722.0	3.95	11.88
IDLE CO,PCT (MEAS)				.10						
IDLE CO,PCT (SPEC)				.30	1975 FTP	3.26	12.46	797.9	2.90	10.72
OTHER TESTS: MODAL										
4082	1974	CADI	COUP	472	COLD TRANS	3.61	78.99	910.9	1.13	8.48
					COLD STAB	2.30	29.29	867.3	.89	9.64
IDLE HC,PPM/HEXANE				55.	HOT TRANS	1.91	17.09	786.5	1.36	10.83
IDLE CO,PCT (MEAS)				.35						
IDLE CO,PCT (SPEC)				.40	1975 FTP	2.46	36.19	854.2	1.07	9.66
OTHER TESTS: MODAL										

EMISSION RESULTS IN GRAMS PER MILE
FUEL ECONOMY IN MILES PER GALLON

APPENDIX E

LISTING OF FEDERAL TEST PROCEDURE RESULTS ON INDIVIDUAL VEHICLES

CALIFORNIA

VEHICLE NUMBER	YEAR	MAKE	MODEL	CID	TEST TYPE	HC	CO	CO2	NOXC	FUEL ECONOMY
4083	1974	CHEV	VEGA	140	COLD TRANS	3.39	65.76	482.1	2.52	14.89
					COLD STAB	2.31	38.35	391.1	1.72	19.35
IDLE HC,PPM/HEXANE				275.	HOT TRANS	1.98	31.20	396.9	1.99	19.63
IDLE CO,PCT (MEAS)				4.60						
IDLE CO,PCT (SPEC)				.50	1975 FTP	2.44	42.04	411.4	1.96	18.29
OTHER TESTS: MODAL										
4084	1974	CHEV	MONT	350	COLD TRANS	5.27	24.90	680.8	4.95	12.05
					COLD STAB	5.52	14.61	620.4	2.66	13.43
IDLE HC,PPM/HEXANE				1500.	HOT TRANS	4.96	16.45	593.2	4.74	13.98
IDLE CO,PCT (MEAS)				.12						
IDLE CO,PCT (SPEC)				.50	1975 FTP	5.32	17.23	625.4	3.70	13.26
OTHER TESTS: MODAL										
4085	1974	CHEV	MONT	350	COLD TRANS	2.31	39.54	864.3	1.68	9.50
					COLD STAB	1.53	38.21	977.2	.93	8.52
IDLE HC,PPM/HEXANE				40.	HOT TRANS	1.56	31.13	767.5	1.44	10.80
IDLE CO,PCT (MEAS)				.08						
IDLE CO,PCT (SPEC)				99.99	1975 FTP	1.70	36.55	896.8	1.22	9.25
OTHER TESTS: MODAL										
4086	1974	CHEV	CAPR	350	COLD TRANS	3.52	85.75	803.9	1.55	9.34
					COLD STAB	1.65	16.49	771.3	1.16	11.06
IDLE HC,PPM/HEXANE				70.	HOT TRANS	1.83	12.52	669.9	1.98	12.76
IDLE CO,PCT (MEAS)				.20						
IDLE CO,PCT (SPEC)				.50	1975 FTP	2.09	29.66	750.3	1.46	11.05
OTHER TESTS: MODAL										
4087	1974	CHEV	IMPA	350	COLD TRANS	36.43	61.10	675.6	4.71	10.00
					COLD STAB	34.27	52.62	678.4	1.98	10.20
IDLE HC,PPM/HEXANE				210.	HOT TRANS	29.53	45.58	596.9	3.31	11.64
IDLE CO,PCT (MEAS)				2.00						
IDLE CO,PCT (SPEC)				.50	1975 FTP	33.42	52.45	655.6	2.91	10.52
OTHER TESTS: MODAL										

EMISSION RESULTS IN GRAMS PER MILE
FUEL ECONOMY IN MILES PER GALLON

APPENDIX E

LISTING OF FEDERAL TEST PROCEDURE RESULTS ON INDIVIDUAL VEHICLES

CALIFORNIA

VEHICLE NUMBER	YEAR	MAKE	MODEL	CID	TEST TYPE	HC	CO	CO2	NOXC	FUEL ECONOMY
4088	1974	CHEV	CAPR	400	COLD TRANS	2.31	21.47	914.9	1.45	9.28
					COLD STAB	1.17	9.51	890.3	.87	9.76
IDLE HC,PPM/HEXANE				70.	HOT TRANS	1.35	13.47	786.4	1.39	10.93
IDLE CO,PCT (MEAS)				.08						
IDLE CO,PCT (SPEC)				.50	1975 FTP	1.45	13.05	867.0	1.13	9.95
OTHER TESTS: MODAL										
4089	1974	CHRY	NEWP	360	COLD TRANS	7.11	24.09	684.1	5.55	11.92
					COLD STAB	9.21	21.24	568.7	3.38	14.06
IDLE HC,PPM/HEXANE				225.	HOT TRANS	7.59	9.57	547.0	6.19	15.14
IDLE CO,PCT (MEAS)				.95						
IDLE CO,PCT (SPEC)				.50	1975 FTP	8.33	18.64	586.5	4.60	13.82
OTHER TESTS: MODAL										
4090	1974	DODG	DART	225	COLD TRANS	5.94	57.02	560.5	7.82	13.27
					COLD STAB	2.19	35.73	499.3	4.24	15.78
IDLE HC,PPM/HEXANE				130.	HOT TRANS	2.05	18.70	473.3	6.35	17.43
IDLE CO,PCT (MEAS)				2.70						
IDLE CO,PCT (SPEC)				.50	1975 FTP	2.92	35.47	504.8	5.55	15.58
OTHER TESTS: MODAL										
4091	1974	FORD	PINT	140	COLD TRANS	3.29	48.13	437.2	.91	16.96
					COLD STAB	2.69	29.66	457.2	.75	17.32
IDLE HC,PPM/HEXANE				45.	HOT TRANS	2.64	23.14	378.5	.99	20.97
IDLE CO,PCT (MEAS)				1.70						
IDLE CO,PCT (SPEC)				.15	1975 FTP	2.80	31.68	431.6	.85	18.10
OTHER TESTS: MODAL										
4092	1974	FORD	MAVE	302	COLD TRANS	3.40	58.85	708.4	4.66	10.93
					COLD STAB	2.05	27.95	668.0	1.51	12.35
IDLE HC,PPM/HEXANE				90.	HOT TRANS	2.67	34.48	662.3	1.53	12.24
IDLE CO,PCT (MEAS)				.75						
IDLE CO,PCT (SPEC)				.25	1975 FTP	2.50	36.09	674.7	2.17	12.00
OTHER TESTS: MODAL										

EMISSION RESULTS IN GRAMS PER MILE
FUEL ECONOMY IN MILES PER GALLON

APPENDIX E

LISTING OF FEDERAL TEST PROCEDURE RESULTS ON INDIVIDUAL VEHICLES

CALIFORNIA

VEHICLE NUMBER	YEAR	MAKE	MODEL	CID	TEST TYPE	HC	CO	CO2	NOXC	FUEL ECONOMY
4093	1974	FORD	MUST	139	COLD TRANS	2.46	54.38	470.7	1.62	15.74
					COLD STAB	.99	31.76	504.8	.48	15.91
IDLE HC,PPM/HEXANE				80.	HOT TRANS	1.33	31.71	416.2	1.16	18.88
IDLE CO,PCT (MEAS)				1.30						
IDLE CO,PCT (SPEC)				.15	1975 FTP	1.38	36.40	473.6	.90	16.58
OTHER TESTS: MODAL										
4094	1974	FORD	LTD	400	COLD TRANS	4.74	97.06	903.2	1.33	8.29
					COLD STAB	2.50	94.71	886.8	.70	8.50
IDLE HC,PPM/HEXANE				75.	HOT TRANS	2.49	63.40	806.6	1.14	9.71
IDLE CO,PCT (MEAS)				1.50						
IDLE CO,PCT (SPEC)				.40	1975 FTP	2.96	86.65	868.3	.95	8.75
OTHER TESTS: MODAL										
4095	1974	FORD	LTD	351	COLD TRANS	3.82	66.12	821.5	5.99	9.47
					COLD STAB	1.30	61.68	869.6	2.70	9.14
IDLE HC,PPM/HEXANE				75.	HOT TRANS	2.22	43.34	737.2	5.55	10.93
IDLE CO,PCT (MEAS)				.40						
IDLE CO,PCT (SPEC)				.40	1975 FTP	2.07	57.59	823.6	4.15	9.64
OTHER TESTS: MODAL										
4096	1974	MERC	MONT	460	COLD TRANS	3.22	61.86	858.8	4.33	9.19
					COLD STAB	2.04	32.29	908.9	1.43	9.19
IDLE HC,PPM/HEXANE				20.	HOT TRANS	2.27	27.17	772.5	2.97	10.79
IDLE CO,PCT (MEAS)				.20						
IDLE CO,PCT (SPEC)				.40	1975 FTP	2.35	36.98	861.4	2.44	9.57
OTHER TESTS: MODAL										
4097	1974	OLDS	CUTL	350	COLD TRANS	5.02	88.98	841.1	1.33	8.90
					COLD STAB	2.62	21.57	791.7	1.18	10.64
IDLE HC,PPM/HEXANE				70.	HOT TRANS	2.81	33.29	699.0	1.27	11.67
IDLE CO,PCT (MEAS)				.40						
IDLE CO,PCT (SPEC)				.20	1975 FTP	3.17	38.64	776.6	1.23	10.47
OTHER TESTS: MODAL										

EMISSION RESULTS IN GRAMS PER MILE
FUEL ECONOMY IN MILES PER GALLON

APPENDIX E

LISTING OF FEDERAL TEST PROCEDURE RESULTS ON INDIVIDUAL VEHICLES

CALIFORNIA

VEHICLE NUMBER	YEAR	MAKE	MODEL	CID	TEST TYPE	HC	CO	CO2	NOXC	FUEL ECONOMY
4098	1974	OLDS	CUTL	350	COLD TRANS	3.99	52.58	732.0	4.08	10.73
					COLD STAB	3.13	51.94	673.5	2.27	11.60
IDLE HC,PPM/HEXANE				100.	HOT TRANS	3.32	27.95	616.2	4.31	13.23
IDLE CO,PCT (MEAS)				2.85						
IDLE CO,PCT (SPEC)				.30	1975 FTP	3.36	45.52	669.9	3.20	11.80
OTHER TESTS: MODAL										
4099	1974	PLYM	SATE	318	COLD TRANS	16.53	92.73	609.3	2.76	10.99
					COLD STAB	4.80	79.09	575.6	1.65	12.41
IDLE HC,PPM/HEXANE				225.	HOT TRANS	4.42	38.09	558.8	3.19	14.03
IDLE CO,PCT (MEAS)				3.50						
IDLE CO,PCT (SPEC)				.50	1975 FTP	7.11	70.71	577.9	2.30	12.47
OTHER TESTS: MODAL										
4100	1974	PLYM	DUST	225	COLD TRANS	4.61	59.19	417.3	1.31	16.91
					COLD STAB	3.45	80.26	495.0	.74	14.04
IDLE HC,PPM/HEXANE				180.	HOT TRANS	3.47	46.80	443.5	1.36	16.81
IDLE CO,PCT (MEAS)				5.20						
IDLE CO,PCT (SPEC)				.50	1975 FTP	3.70	66.80	465.0	1.03	15.26
OTHER TESTS: MODAL										
4101	1974	PONT	VENT	350	COLD TRANS	2.83	61.97	929.2	1.54	8.57
					COLD STAB	1.76	57.16	847.4	1.00	9.41
IDLE HC,PPM/HEXANE				70.	HOT TRANS	2.69	52.79	695.5	1.50	11.28
IDLE CO,PCT (MEAS)				2.30						
IDLE CO,PCT (SPEC)				.30	1975 FTP	2.24	56.96	822.8	1.25	9.65
OTHER TESTS: MODAL										
4102	1974	DATS	710	119	COLD TRANS	3.87	42.27	379.2	1.69	19.38
					COLD STAB	3.67	28.70	369.7	1.13	20.81
IDLE HC,PPM/HEXANE				70.	HOT TRANS	2.87	22.83	327.4	1.65	23.84
IDLE CO,PCT (MEAS)				1.40						
IDLE CO,PCT (SPEC)				1.50	1975 FTP	3.49	29.89	360.1	1.39	21.22
OTHER TESTS: MODAL										

EMISSION RESULTS IN GRAMS PER MILE
FUEL ECONOMY IN MILES PER GALLON

APPENDIX E

LISTING OF FEDERAL TEST PROCEDURE RESULTS ON INDIVIDUAL VEHICLES

CALIFORNIA

VEHICLE NUMBER	YEAR	MAKE	MODEL	CID	TEST TYPE	HC	CO	CO2	NOXC	FUEL ECONOMY
4103	1974	TOYO	CORO	97	COLD TRANS	2.38	34.03	416.5	2.93	18.59
					COLD STAB	.45	11.84	489.6	1.14	17.41
IDLE HC,PPM/HEXANE				125.	HOT TRANS	1.18	18.10	377.9	2.36	21.64
IDLE CO,PCT (MEAS)				2.10						
IDLE CO,PCT (SPEC)				1.50	1975 FTP	1.04	18.12	444.1	1.84	18.65
OTHER TESTS: MODAL										
4104	1974	TOYO	CELI	120	COLD TRANS	3.71	42.05	515.8	1.56	14.95
					COLD STAB	1.70	28.24	551.8	1.10	14.75
IDLE HC,PPM/HEXANE				145.	HOT TRANS	3.32	16.44	496.1	1.82	16.67
IDLE CO,PCT (MEAS)				3.40						
IDLE CO,PCT (SPEC)				2.00	1975 FTP	2.56	27.86	529.2	1.39	15.27
OTHER TESTS: MODAL										
4105	1974	VOLK	SEDA	97	COLD TRANS	5.55	85.61	311.6	3.73	19.14
					COLD STAB	2.65	53.55	337.1	1.80	20.66
IDLE HC,PPM/HEXANE				85.	HOT TRANS	2.32	40.76	298.9	3.67	23.97
IDLE CO,PCT (MEAS)				1.75						
IDLE CO,PCT (SPEC)				2.00	1975 FTP	3.15	56.66	321.4	2.71	21.11
OTHER TESTS: MODAL										
4106	1974	VOLK	SEDA	97	COLD TRANS	5.14	48.86	356.3	3.24	19.75
					COLD STAB	4.98	54.50	378.3	1.83	18.50
IDLE HC,PPM/HEXANE				50.	HOT TRANS	3.58	38.37	345.6	2.97	21.27
IDLE CO,PCT (MEAS)				1.80						
IDLE CO,PCT (SPEC)				2.00	1975 FTP	4.63	48.94	364.8	2.43	19.45
OTHER TESTS: MODAL										
3107	1973	AMC	HORN	258	COLD TRANS	36.94	51.74	481.6	10.91	13.05
					COLD STAB	31.48	66.07	385.9	5.19	15.05
IDLE HC,PPM/HEXANE				350.	HOT TRANS	27.79	34.28	375.7	9.29	17.14
IDLE CO,PCT (MEAS)				8.50						
IDLE CO,PCT (SPEC)				1.25	1975 FTP	31.60	54.45	402.8	7.49	15.08
OTHER TESTS: MODAL										

EMISSION RESULTS IN GRAMS PER MILE
FUEL ECONOMY IN MILES PER GALLON

APPENDIX E

LISTING OF FEDERAL TEST PROCEDURE RESULTS ON INDIVIDUAL VEHICLES

CALIFORNIA

VEHICLE NUMBER	YEAR	MAKE	MODEL	CID	TEST TYPE	HC	CO	CO2	NOXC	FUEL ECONOMY
3108	1973	BUIC	PEGA	455	COLD TRANS	4.16	51.69	912.4	3.49	8.82
					COLD STAB	3.38	42.03	928.1	2.41	8.83
IDLE HC,PPM/HEXANE				85.	HOT TRANS	2.82	22.43	799.7	3.87	10.52
IDLE CO,PCT (MEAS)				1.00						
IDLE CO,PCT (SPEC)				1.00	1975 FTP	3.39	38.67	889.9	3.03	9.23
OTHER TESTS: MODAL										
3109	1973	BUIC	REGA	350	COLD TRANS	4.46	42.94	717.0	2.48	11.11
					COLD STAB	2.17	22.60	700.9	1.28	11.94
IDLE HC,PPM/HEXANE				85.	HOT TRANS	1.97	11.61	602.9	2.55	14.15
IDLE CO,PCT (MEAS)				1.00						
IDLE CO,PCT (SPEC)				1.00	1975 FTP	2.59	23.79	677.5	1.88	12.28
OTHER TESTS: MODAL										
3110	1973	CADI	COUP	472	COLD TRANS	2.74	68.29	954.6	2.56	8.29
					COLD STAB	1.12	6.18	962.6	2.28	9.10
IDLE HC,PPM/HEXANE				30.	HOT TRANS	1.04	5.29	849.1	3.03	10.31
IDLE CO,PCT (MEAS)				.10						
IDLE CO,PCT (SPEC)				1.00	1975 FTP	1.43	18.72	930.0	2.54	9.21
OTHER TESTS: MODAL										
3111	1973	CHEV	VEGA	140	COLD TRANS	2.69	38.85	399.0	2.75	18.94
					COLD STAB	2.11	28.26	356.4	2.53	21.78
IDLE HC,PPM/HEXANE				175.	HOT TRANS	2.36	19.00	343.3	2.82	23.32
IDLE CO,PCT (MEAS)				2.70						
IDLE CO,PCT (SPEC)				1.20	1975 FTP	2.30	27.91	361.6	2.65	21.50
OTHER TESTS: MODAL										
3112	1973	CHEV	MONT	350	COLD TRANS	4.83	51.24	612.9	2.74	12.52
					COLD STAB	2.88	47.72	622.9	1.26	12.55
IDLE HC,PPM/HEXANE				145.	HOT TRANS	3.04	26.68	535.4	2.58	15.12
IDLE CO,PCT (MEAS)				1.15						
IDLE CO,PCT (SPEC)				1.20	1975 FTP	3.33	42.70	597.0	1.93	13.16
OTHER TESTS: MODAL										

EMISSION RESULTS IN GRAMS PER MILE
FUEL ECONOMY IN MILES PER GALLON

APPENDIX E

LISTING OF FEDERAL TEST PROCEDURE RESULTS ON INDIVIDUAL VEHICLES

CALIFORNIA

VEHICLE NUMBER	YEAR	MAKE	MODEL	CID	TEST TYPE	HC	CO	CO2	NOXC	FUEL ECONOMY
3113	1973	CHEV	NOVA	350	COLD TRANS	3.53	76.51	621.3	2.70	11.79
					COLD STAB	2.88	96.01	639.9	1.13	11.10
IDLE HC,PPM/HEXANE				30.	HOT TRANS	2.71	60.89	542.3	2.53	13.73
IDLE CO,PCT (MEAS)				.70						
IDLE CO,PCT (SPEC)				1.20	1975 FTP	2.97	82.42	609.4	1.84	11.86
OTHER TESTS: MODAL										
3114	1973	CHEV	IMPA	350	COLD TRANS	3.64	45.80	741.9	3.35	10.75
					COLD STAB	2.28	27.96	724.7	1.84	11.44
IDLE HC,PPM/HEXANE				110.	HOT TRANS	2.18	19.48	638.1	3.35	13.14
IDLE CO,PCT (MEAS)				1.15						
IDLE CO,PCT (SPEC)				99.99	1975 FTP	2.53	29.32	704.6	2.56	11.70
OTHER TESTS: MODAL										
3115	1973	CHEV	CAPR	400	COLD TRANS	2.69	53.92	724.3	2.35	10.86
					COLD STAB	1.70	31.16	723.3	1.48	11.41
IDLE HC,PPM/HEXANE				100.	HOT TRANS	1.93	20.07	652.6	3.04	12.86
IDLE CO,PCT (MEAS)				.10						
IDLE CO,PCT (SPEC)				.60	1975 FTP	1.97	32.82	704.2	2.08	11.65
OTHER TESTS: MODAL										
3116	1973	DODG	DART	225	COLD TRANS	2.50	23.94	494.0	7.72	16.45
					COLD STAB	1.76	7.71	454.6	3.90	18.79
IDLE HC,PPM/HEXANE				180.	HOT TRANS	2.01	10.37	424.7	7.38	19.84
IDLE CO,PCT (MEAS)				.50						
IDLE CO,PCT (SPEC)				.50	1975 FTP	1.98	11.78	454.5	5.63	18.52
OTHER TESTS: MODAL										
3117	1973	FORD	PINT	122	COLD TRANS	3.32	58.79	318.9	4.22	21.04
					COLD STAB	2.36	40.19	316.8	2.91	22.91
IDLE HC,PPM/HEXANE				175.	HOT TRANS	1.64	20.47	305.3	5.05	25.90
IDLE CO,PCT (MEAS)				2.30						
IDLE CO,PCT (SPEC)				1.50	1975 FTP	2.36	38.64	314.1	3.76	23.22
OTHER TESTS: MODAL										

EMISSION RESULTS IN GRAMS PER MILE
FUEL ECONOMY IN MILES PER GALLON

APPENDIX E

LISTING OF FEDERAL TEST PROCEDURE RESULTS ON INDIVIDUAL VEHICLES

CALIFORNIA

VEHICLE NUMBER	YEAR	MAKE	MODEL	CID	TEST TYPE	HC	CO	CO2	NOXC	FUEL ECONOMY
3118	1973	FORD	TORI	351	COLD TRANS	6.29	59.75	804.1	4.08	9.67
					COLD STAB	3.56	39.48	823.6	2.05	9.90
IDLE HC,PPM/HEXANE				170.	HOT TRANS	2.97	20.03	695.0	3.83	12.06
IDLE CO,PCT (MEAS)				2.40						
IDLE CO,PCT (SPEC)				.50	1975 FTP	3.96	38.35	784.5	2.95	10.35
OTHER TESTS: MODAL										
3119	1973	FORD	MAVE	302	COLD TRANS	6.31	46.86	687.3	2.57	11.37
					COLD STAB	3.27	41.61	693.7	1.10	11.53
IDLE HC,PPM/HEXANE				450.	HOT TRANS	3.95	26.52	608.6	2.38	13.39
IDLE CO,PCT (MEAS)				.20						
IDLE CO,PCT (SPEC)				.40	1975 FTP	4.08	38.57	669.2	1.75	11.95
OTHER TESTS: MODAL										
3120	1973	FORD	STAW	429	COLD TRANS	6.42	121.56	745.9	8.47	9.27
					COLD STAB	4.70	132.77	702.1	4.26	9.59
IDLE HC,PPM/HEXANE				100.	HOT TRANS	4.32	72.77	661.9	7.61	11.24
IDLE CO,PCT (MEAS)				3.70						
IDLE CO,PCT (SPEC)				.50	1975 FTP	4.95	114.09	700.1	6.04	9.92
OTHER TESTS: MODAL										
3121	1973	FORD	TORI	351	COLD TRANS	5.08	92.82	668.9	2.97	10.68
					COLD STAB	3.24	80.03	681.5	1.51	10.86
IDLE HC,PPM/HEXANE				400.	HOT TRANS	3.71	53.75	606.5	2.78	12.63
IDLE CO,PCT (MEAS)				2.60						
IDLE CO,PCT (SPEC)				.30	1975 FTP	3.74	75.50	658.4	2.16	11.25
OTHER TESTS: MODAL										
3122	1973	MERC	MONT	400	COLD TRANS	3.33	53.87	706.3	6.60	11.07
					COLD STAB	2.58	40.96	686.8	4.18	11.69
IDLE HC,PPM/HEXANE				84.	HOT TRANS	2.68	26.54	605.9	6.42	13.53
IDLE CO,PCT (MEAS)				.45						
IDLE CO,PCT (SPEC)				.50	1975 FTP	2.76	39.68	668.7	5.29	12.00
OTHER TESTS: MODAL										

EMISSION RESULTS IN GRAMS PER MILE
FUEL ECONOMY IN MILES PER GALLON

APPENDIX E

LISTING OF FEDERAL TEST PROCEDURE RESULTS ON INDIVIDUAL VEHICLES

CALIFORNIA

VEHICLE NUMBER	YEAR	MAKE	MODEL	CID	TEST TYPE	HC	CO	CO2	NOXC	FUEL ECONOMY
3123	1973	OLDS	STAW	455	COLD TRANS	3.96	48.90	950.7	3.46	8.53
					COLD STAB	2.92	76.76	979.4	1.87	8.00
IDLE HC,PPM/HEXANE				75.	HOT TRANS	2.94	35.09	904.0	2.95	9.16
IDLE CO,PCT (MEAS)				.70						
IDLE CO,PCT (SPEC)				.30	1975 FTP	3.14	59.66	952.9	2.49	8.40
OTHER TESTS: MODAL										
3124	1973	OLDS	CUTL	350	COLD TRANS	3.45	43.15	668.1	7.80	11.88
					COLD STAB	3.11	41.06	601.0	4.36	13.14
IDLE HC,PPM/HEXANE				150.	HOT TRANS	2.57	24.21	546.8	6.70	14.97
IDLE CO,PCT (MEAS)				3.00						
IDLE CO,PCT (SPEC)				.30	1975 FTP	3.03	36.89	600.0	5.71	13.29
OTHER TESTS: MODAL										
3125	1973	PLYM	VALI	225	COLD TRANS	3.43	56.46	466.1	7.58	15.69
					COLD STAB	3.12	47.40	406.3	4.43	18.09
IDLE HC,PPM/HEXANE				270.	HOT TRANS	2.96	36.34	392.0	6.96	19.36
IDLE CO,PCT (MEAS)				6.90						
IDLE CO,PCT (SPEC)				.50	1975 FTP	3.14	46.25	414.7	5.77	17.85
OTHER TESTS: MODAL										
3126	1973	PLYM	DUST	225	COLD TRANS	7.66	121.57	409.3	3.60	14.21
					COLD STAB	5.23	117.28	393.6	2.36	14.93
IDLE HC,PPM/HEXANE				300.	HOT TRANS	4.23	74.54	380.8	4.08	17.36
IDLE CO,PCT (MEAS)				10.00						
IDLE CO,PCT (SPEC)				.50	1975 FTP	5.46	106.50	393.3	3.08	15.36
OTHER TESTS: MODAL										
3127	1973	PONT	LEMA	400	COLD TRANS	6.32	42.86	875.7	2.51	9.22
					COLD STAB	8.45	42.73	743.1	2.12	10.60
IDLE HC,PPM/HEXANE				1600.	HOT TRANS	7.22	13.28	675.6	4.67	12.34
IDLE CO,PCT (MEAS)				.20						
IDLE CO,PCT (SPEC)				.20	1975 FTP	7.67	34.73	752.0	2.90	10.68
OTHER TESTS: MODAL										

EMISSION RESULTS IN GRAMS PER MILE
FUEL ECONOMY IN MILES PER GALLON

APPENDIX E

LISTING OF FEDERAL TEST PROCEDURE RESULTS ON INDIVIDUAL VEHICLES

CALIFORNIA

VEHICLE NUMBER	YEAR	MAKE	MODEL	CID	TEST TYPE	HC	CO	CO2	NOXC	FUEL ECONOMY
3128	1973	PONT	LEMA	350	COLD TRANS	4.04	83.80	1015.6	4.12	7.65
					COLD STAB	2.33	40.90	932.5	3.70	8.84
IDLE HC,PPM/HEXANE				120.	HOT TRANS	2.62	37.47	806.3	6.07	10.16
IDLE CO,PCT (MEAS)				.80						
IDLE CO,PCT (SPEC)				.20	1975 FTP	2.76	48.79	915.2	4.43	8.87
OTHER TESTS: MODAL										
3129	1973	DATS	1600	97	COLD TRANS	2.47	22.41	394.6	4.85	20.28
					COLD STAB	3.06	20.32	387.4	2.59	20.69
IDLE HC,PPM/HEXANE				400.	HOT TRANS	2.31	14.40	343.6	4.65	23.76
IDLE CO,PCT (MEAS)				1.30						
IDLE CO,PCT (SPEC)				1.50	1975 FTP	2.73	19.13	376.9	3.61	21.35
OTHER TESTS: MODAL										
3130	1973	OPEL	MANT	116	COLD TRANS	4.54	93.57	336.3	1.11	17.83
					COLD STAB	4.97	121.10	355.0	.66	15.82
IDLE HC,PPM/HEXANE				90.	HOT TRANS	3.89	85.19	314.0	1.04	19.28
IDLE CO,PCT (MEAS)				6.60						
IDLE CO,PCT (SPEC)				99.99	1975 FTP	4.59	105.63	340.0	.86	17.05
OTHER TESTS: MODAL										
3131	1973	TOYO	CORO	97	COLD TRANS	3.48	63.95	321.4	1.97	20.50
					COLD STAB	3.44	71.59	333.7	.68	19.42
IDLE HC,PPM/HEXANE				190.	HOT TRANS	2.98	52.42	289.9	1.56	23.25
IDLE CO,PCT (MEAS)				.50						
IDLE CO,PCT (SPEC)				2.00	1975 FTP	3.32	64.79	319.2	1.19	20.57
OTHER TESTS: MODAL										
3132	1973	VOLK	SEDA	97	COLD TRANS	4.22	43.47	338.9	2.51	21.10
					COLD STAB	3.12	45.96	345.4	1.48	20.76
IDLE HC,PPM/HEXANE				40.	HOT TRANS	2.74	31.14	309.0	2.42	24.20
IDLE CO,PCT (MEAS)				1.35						
IDLE CO,PCT (SPEC)				2.00	1975 FTP	3.25	41.41	334.2	1.95	21.67
OTHER TESTS: MODAL										

EMISSION RESULTS IN GRAMS PER MILE
FUEL ECONOMY IN MILES PER GALLON

APPENDIX E

LISTING OF FEDERAL TEST PROCEDURE RESULTS ON INDIVIDUAL VEHICLES

CALIFORNIA

VEHICLE NUMBER	YEAR	MAKE	MODEL	CID	TEST TYPE	HC	CO	CO2	NOxC	FUEL ECONOMY
3133	1973	VOLK	SEDA	97	COLD TRANS	6.06	82.53	351.5	3.26	17.74
					COLD STAB	2.63	32.71	397.3	1.72	19.42
IDLE HC,PPM/HEXANE				475.	HOT TRANS	2.31	26.49	350.1	3.32	22.24
IDLE CO,PCT (MEAS)				1.40						
IDLE CO,PCT (SPEC)				2.00	1975 FTP	3.25	41.27	375.0	2.47	19.72
OTHER TESTS: MODAL										
2134	1972	AMC	GREM	232	COLD TRANS	4.65	105.53	494.1	1.90	13.16
					COLD STAB	2.79	67.72	548.3	1.45	13.38
IDLE HC,PPM/HEXANE				175.	HOT TRANS	2.17	31.40	481.6	2.81	16.50
IDLE CO,PCT (MEAS)				4.60						
IDLE CO,PCT (SPEC)				1.00	1975 FTP	3.00	65.59	518.9	1.91	14.05
OTHER TESTS: MODAL										
2135	1972	BUIC	SKYL	350	COLD TRANS	3.89	49.01	635.1	6.08	12.25
					COLD STAB	3.15	49.64	555.2	3.62	13.80
IDLE HC,PPM/HEXANE				240.	HOT TRANS	2.53	29.25	529.3	6.19	15.21
IDLE CO,PCT (MEAS)				2.70						
IDLE CO,PCT (SPEC)				.80	1975 FTP	3.13	43.95	564.6	4.83	13.79
OTHER TESTS: MODAL										
2136	1972	CADI	FLEE	472	COLD TRANS	3.39	89.83	851.9	3.98	8.84
					COLD STAB	2.59	88.21	805.5	1.57	9.32
IDLE HC,PPM/HEXANE				30.	HOT TRANS	2.75	50.44	705.7	4.06	11.18
IDLE CO,PCT (MEAS)				1.10						
IDLE CO,PCT (SPEC)				1.00	1975 FTP	2.80	78.24	787.8	2.75	9.65
OTHER TESTS: MODAL										
2137	1972	CHEV	VEGA	140	COLD TRANS	3.02	41.37	515.9	1.98	15.03
					COLD STAB	.94	16.44	448.6	1.55	18.59
IDLE HC,PPM/HEXANE				180.	HOT TRANS	3.06	16.76	429.7	2.14	19.06
IDLE CO,PCT (MEAS)				1.25						
IDLE CO,PCT (SPEC)				1.20	1975 FTP	1.95	21.66	457.3	1.80	17.84
OTHER TESTS: MODAL										

EMISSION RESULTS IN GRAMS PER MILE
FUEL ECONOMY IN MILES PER GALLON

APPENDIX E

LISTING OF FEDERAL TEST PROCEDURE RESULTS ON INDIVIDUAL VEHICLES

CALIFORNIA

VEHICLE NUMBER	YEAR	MAKE	MODEL	CID	TEST TYPE	HC	CO	CO2	NOXC	FUEL ECONOMY
2138	1972	CHEV	MAL1	350	COLD TRANS	3.25	46.29	674.0	2.73	11.72
					COLD STAB	1.13	17.89	688.1	1.42	12.33
IDLE HC,PPM/HEXANE				150.	HOT TRANS	1.40	12.45	581.6	2.97	14.65
IDLE CO,PCT (MEAS)				1.25						
IDLE CO,PCT (SPEC)				.60	1975 FTP	1.64	22.25	656.2	2.11	12.75
OTHER TESTS: MODAL										
2139	1972	CHEV	MONT	350	COLD TRANS	1.69	16.42	768.4	2.83	11.10
					COLD STAB	1.37	11.72	751.8	1.49	11.46
IDLE HC,PPM/HEXANE				110.	HOT TRANS	1.65	9.52	636.6	2.73	13.51
IDLE CO,PCT (MEAS)				.75						
IDLE CO,PCT (SPEC)				.60	1975 FTP	1.51	12.09	723.8	2.10	11.87
OTHER TESTS: MODAL										
2140	1972	CHEV	NOVA	307	COLD TRANS	4.15	26.82	540.8	3.58	14.89
					COLD STAB	3.24	26.69	536.1	2.25	15.09
IDLE HC,PPM/HEXANE				470.	HOT TRANS	3.19	24.99	472.5	3.34	17.01
IDLE CO,PCT (MEAS)				7.40						
IDLE CO,PCT (SPEC)				1.20	1975 FTP	3.41	26.25	519.7	2.82	15.52
OTHER TESTS: MODAL										
2141	1972	CHEV	IMPA	350	COLD TRANS	2.62	73.15	750.5	4.89	10.16
					COLD STAB	1.08	21.29	731.0	2.74	11.56
IDLE HC,PPM/HEXANE				70.	HOT TRANS	1.21	18.32	654.4	6.10	12.92
IDLE CO,PCT (MEAS)				.50						
IDLE CO,PCT (SPEC)				99.99	1975 FTP	1.43	31.16	714.1	4.10	11.56
OTHER TESTS: MODAL										
2142	1972	CHEV	STAW	400	COLD TRANS	3.54	63.99	860.7	4.76	9.13
					COLD STAB	1.71	15.81	877.8	2.94	9.77
IDLE HC,PPM/HEXANE				200.	HOT TRANS	2.27	24.94	761.7	4.49	10.98
IDLE CO,PCT (MEAS)				.08						
IDLE CO,PCT (SPEC)				.60	1975 FTP	2.24	28.21	842.6	3.74	9.93
OTHER TESTS: MODAL										

EMISSION RESULTS IN GRAMS PER MILE
FUEL ECONOMY IN MILES PER GALLON

APPENDIX E

LISTING OF FEDERAL TEST PROCEDURE RESULTS ON INDIVIDUAL VEHICLES

CALIFORNIA

VEHICLE NUMBER	YEAR	MAKE	MODEL	CID	TEST TYPE	HC	CO	CO2	NOXC	FUEL ECONOMY
2143	1972	DODG	CORO	318	COLD TRANS	4.55	88.46	641.1	5.04	11.17
					COLD STAB	3.19	89.84	632.9	2.57	11.32
IDLE HC,PPM/HEXANE				140.	HOT TRANS	3.12	56.31	588.2	5.74	12.93
IDLE CO,PCT (MEAS)				5.40						
IDLE CO,PCT (SPEC)				.50	1975 FTP	3.45	80.41	622.4	3.94	11.68
OTHER TESTS: MODAL										
2144	1972	FORD	PINT	122	COLD TRANS	5.51	31.69	361.8	4.87	20.69
					COLD STAB	5.80	23.97	348.4	3.10	21.94
IDLE HC,PPM/HEXANE				1300.	HOT TRANS	4.36	19.80	322.1	4.67	24.18
IDLE CO,PCT (MEAS)				4.70						
IDLE CO,PCT (SPEC)				1.20	1975 FTP	5.35	24.42	344.0	3.89	22.23
OTHER TESTS: MODAL										
2145	1972	FORD	TORI	302	COLD TRANS	6.96	71.10	682.7	5.73	10.87
					COLD STAB	4.11	35.55	602.0	3.65	13.23
IDLE HC,PPM/HEXANE				140.	HOT TRANS	4.59	29.99	617.5	8.19	13.07
IDLE CO,PCT (MEAS)				1.60						
IDLE CO,PCT (SPEC)				.40	1975 FTP	4.83	41.35	622.9	5.32	12.62
OTHER TESTS: MODAL										
2146	1972	FORD	MUST	250	COLD TRANS	3.71	76.04	604.5	3.68	12.06
					COLD STAB	1.97	37.55	681.7	2.19	11.88
IDLE HC,PPM/HEXANE				35.	HOT TRANS	2.70	27.74	517.1	3.83	15.59
IDLE CO,PCT (MEAS)				.07						
IDLE CO,PCT (SPEC)				.80	1975 FTP	2.53	42.79	620.9	2.95	12.75
OTHER TESTS: MODAL										
2147	1972	FORD	STAW	400	COLD TRANS	3.37	42.88	686.1	6.68	11.62
					COLD STAB	3.21	50.94	661.3	3.14	11.81
IDLE HC,PPM/HEXANE				190.	HOT TRANS	3.91	31.61	584.0	7.62	13.74
IDLE CO,PCT (MEAS)				2.80						
IDLE CO,PCT (SPEC)				.30	1975 FTP	3.43	44.01	645.3	5.09	12.24
OTHER TESTS: MODAL										

EMISSION RESULTS IN GRAMS PER MILE
FUEL ECONOMY IN MILES PER GALLON

APPENDIX E

LISTING OF FEDERAL TEST PROCEDURE RESULTS ON INDIVIDUAL VEHICLES

CALIFORNIA

VEHICLE NUMBER	YEAR	MAKE	MODEL	CID	TEST TYPE	HC	CO	CO2	NOXC	FUEL ECONOMY
2148	1972	FORD	STAW	400	COLD TRANS	4.80	92.54	973.0	3.67	7.83
					COLD STAB	2.50	73.52	861.9	2.74	9.01
IDLE HC,PPM/HEXANE				200.	HOT TRANS	2.75	49.88	857.0	3.61	9.40
IDLE CO,PCT (MEAS)				5.10						
IDLE CO,PCT (SPEC)				.30	1975 FTP	3.04	70.98	883.4	3.17	8.83
OTHER TESTS: MODAL										
2149	1972	MERC	MONG	400	COLD TRANS	6.68	93.42	834.2	4.87	8.86
					COLD STAB	2.59	82.73	878.4	2.55	8.73
IDLE HC,PPM/HEXANE				110.	HOT TRANS	3.68	44.81	692.5	5.16	11.46
IDLE CO,PCT (MEAS)				2.80						
IDLE CO,PCT (SPEC)				.10	1975 FTP	3.73	74.59	818.6	3.74	9.37
OTHER TESTS: MODAL										
2150	1972	OLDS	DELT	350	COLD TRANS	4.38	37.88	678.5	6.75	11.80
					COLD STAB	2.71	21.97	636.0	3.77	13.07
IDLE HC,PPM/HEXANE				175.	HOT TRANS	3.10	21.53	427.9	6.59	18.82
IDLE CO,PCT (MEAS)				2.00						
IDLE CO,PCT (SPEC)				.30	1975 FTP	3.16	25.12	588.0	5.15	13.92
OTHER TESTS: MODAL										
2151	1972	PLYM	DUST	225	COLD TRANS	3.72	62.96	516.1	4.93	14.16
					COLD STAB	2.77	34.97	473.2	1.86	16.53
IDLE HC,PPM/HEXANE				170.	HOT TRANS	2.89	31.30	453.1	4.46	17.35
IDLE CO,PCT (MEAS)				1.50						
IDLE CO,PCT (SPEC)				1.00	1975 FTP	3.00	39.73	476.6	3.20	16.18
OTHER TESTS: MODAL										
2152	1972	PLYM	SATE	400	COLD TRANS	26.86	101.97	799.2	3.33	8.50
					COLD STAB	.92	59.29	874.1	1.31	9.15
IDLE HC,PPM/HEXANE				180.	HOT TRANS	1.15	33.93	681.1	3.63	12.02
IDLE CO,PCT (MEAS)				6.00						
IDLE CO,PCT (SPEC)				.50	1975 FTP	6.32	61.15	806.0	2.36	9.62
OTHER TESTS: MODAL										

EMISSION RESULTS IN GRAMS PER MILE
FUEL ECONOMY IN MILES PER GALLON

APPENDIX E

LISTING OF FEDERAL TEST PROCEDURE RESULTS ON INDIVIDUAL VEHICLES

CALIFORNIA

VEHICLE NUMBER	YEAR	MAKE	MODEL	CID	TEST TYPE	HC	CO	CO2	NOXC	FUEL ECONOMY
2153	1972	PONT	CATA	400	COLD TRANS	8.95	137.00	812.5	6.07	8.40
					COLD STAB	3.47	64.78	752.8	2.74	10.25
IDLE HC,PPM/HEXANE				200.	HOT TRANS	3.56	36.37	750.1	8.43	10.84
IDLE CO,PCT (MEAS)				2.80						
IDLE CO,PCT (SPEC)				.80	1975 FTP	4.62	71.89	764.4	4.98	9.95
OTHER TESTS: MODAL										
2154	1972	PONT	BONN	455	COLD TRANS	3.41	25.35	814.8	3.04	10.25
					COLD STAB	1.51	7.97	912.8	1.88	9.54
IDLE HC,PPM/HEXANE				70.	HOT TRANS	1.88	9.22	715.8	3.02	12.05
IDLE CO,PCT (MEAS)				.07						
IDLE CO,PCT (SPEC)				1.00	1975 FTP	2.00	11.89	838.9	2.43	10.27
OTHER TESTS: MODAL										
2155	1972	DATS	510	71	COLD TRANS	1.91	18.09	350.4	3.53	23.06
					COLD STAB	2.34	27.30	363.3	2.28	21.46
IDLE HC,PPM/HEXANE				600.	HOT TRANS	1.83	15.76	320.3	3.32	25.29
IDLE CO,PCT (MEAS)				4.75						
IDLE CO,PCT (SPEC)				2.00	1975 FTP	2.11	22.26	348.9	2.82	22.72
OTHER TESTS: MODAL										
2156	1972	TOYO	CORO	120	COLD TRANS	2.73	40.66	381.2	4.42	19.56
					COLD STAB	2.38	42.53	349.9	1.71	20.92
IDLE HC,PPM/HEXANE				30.	HOT TRANS	1.72	19.08	359.7	4.76	22.46
IDLE CO,PCT (MEAS)				.60						
IDLE CO,PCT (SPEC)				.25	1975 FTP	2.27	35.75	359.0	3.10	21.01
OTHER TESTS: MODAL										
2157	1972	VOLK	SEDA	97	COLD TRANS	4.54	37.42	308.9	2.87	23.23
					COLD STAB	4.09	29.07	341.6	1.56	22.18
IDLE HC,PPM/HEXANE				375.	HOT TRANS	3.28	22.29	290.0	2.50	26.46
IDLE CO,PCT (MEAS)				2.40						
IDLE CO,PCT (SPEC)				2.00	1975 FTP	3.96	28.94	320.8	2.08	23.43
OTHER TESTS: MODAL										

EMISSION RESULTS IN GRAMS PER MILE
FUEL ECONOMY IN MILES PER GALLON

APPENDIX E

LISTING OF FEDERAL TEST PROCEDURE RESULTS ON INDIVIDUAL VEHICLES

CALIFORNIA

VEHICLE NUMBER	YEAR	MAKE	MODEL	CID	TEST TYPE	HC	CO	CO2	NOXC	FUEL ECONOMY
2158	1972	VOLK	SEDA	97	COLD TRANS	5.15	58.50	319.9	2.47	20.73
					COLD STAB	3.94	52.25	358.5	1.65	19.59
IDLE HC,PPM/HEXANE				60.	HOT TRANS	3.38	41.35	311.9	2.44	22.90
IDLE CO,PCT (MEAS)				1.40						
IDLE CO,PCT (SPEC)				2.00	1975 FTP	4.03	50.56	337.8	2.03	20.64
OTHER TESTS: MODAL										
1159	1971	BUIC	LESA	455	COLD TRANS	7.63	71.96	696.9	5.36	10.64
					COLD STAB	8.07	78.71	680.2	3.72	10.70
IDLE HC,PPM/HEXANE				675.	HOT TRANS	5.59	43.83	617.0	6.06	12.61
IDLE CO,PCT (MEAS)				4.40						
IDLE CO,PCT (SPEC)				1.00	1975 FTP	7.30	67.80	666.4	4.70	11.15
OTHER TESTS: MODAL										
1160	1971	BUIC	SKYL	350	COLD TRANS	5.60	81.72	614.1	3.73	11.67
					COLD STAB	4.03	55.33	583.1	1.82	13.00
IDLE HC,PPM/HEXANE				450.	HOT TRANS	3.60	24.80	515.5	3.80	15.68
IDLE CO,PCT (MEAS)				1.20						
IDLE CO,PCT (SPEC)				.60	1975 FTP	4.23	52.43	571.0	2.75	13.31
OTHER TESTS: MODAL										
1161	1971	CHEV	VEGA	140	COLD TRANS	2.50	20.08	472.7	4.23	17.33
					COLD STAB	1.60	9.58	449.7	3.18	18.89
IDLE HC,PPM/HEXANE				125.	HOT TRANS	1.50	11.26	396.2	3.98	21.20
IDLE CO,PCT (MEAS)				.15						
IDLE CO,PCT (SPEC)				2.00	1975 FTP	1.76	12.20	439.8	3.61	19.10
OTHER TESTS: MODAL										
1162	1971	CHEV	MONT	350	COLD TRANS	3.11	11.77	641.1	6.87	13.26
					COLD STAB	2.58	5.41	640.0	3.16	13.52
IDLE HC,PPM/HEXANE				110.	HOT TRANS	3.63	35.20	510.2	5.67	15.38
IDLE CO,PCT (MEAS)				.08						
IDLE CO,PCT (SPEC)				.50	1975 FTP	2.98	14.85	604.8	4.61	13.92
OTHER TESTS: MODAL										

EMISSION RESULTS IN GRAMS PER MILE
FUEL ECONOMY IN MILES PER GALLON

APPENDIX E

LISTING OF FEDERAL TEST PROCEDURE RESULTS ON INDIVIDUAL VEHICLES

CALIFORNIA

VEHICLE NUMBER	YEAR	MAKE	MODEL	CID	TEST TYPE	HC	CO	CO2	NOXC	FUEL ECONOMY
1163	1971	CHEV	CAMA	307	COLD TRANS	4.49	28.12	562.2	4.28	14.30
					COLD STAB	4.72	30.44	505.0	2.78	15.63
IDLE HC,PPM/HEXANE				100.	HOT TRANS	3.31	16.36	476.3	4.39	17.32
IDLE CO,PCT (MEAS)				.75						
IDLE CO,PCT (SPEC)				.50	1975 FTP	4.29	26.12	508.9	3.53	15.75
OTHER TESTS: MODAL										
1164	1971	CHEV	KING	400	COLD TRANS	4.05	43.95	826.1	8.23	9.77
					COLD STAB	2.75	39.38	753.0	3.79	10.78
IDLE HC,PPM/HEXANE				180.	HOT TRANS	2.74	22.81	677.9	8.08	12.28
IDLE CO,PCT (MEAS)				3.60						
IDLE CO,PCT (SPEC)				.60	1975 FTP	3.02	35.80	747.6	5.88	10.91
OTHER TESTS: MODAL										
1165	1971	CHEV	MALI	327	COLD TRANS	3.87	41.61	649.3	4.34	12.21
					COLD STAB	3.42	29.41	576.0	2.42	14.02
IDLE HC,PPM/HEXANE				300.	HOT TRANS	2.71	18.81	521.3	3.64	15.86
IDLE CO,PCT (MEAS)				2.20						
IDLE CO,PCT (SPEC)				.60	1975 FTP	3.32	29.03	576.2	3.15	14.04
OTHER TESTS: MODAL										
1166	1971	CHRY	STAW	383	COLD TRANS	53.01	204.25	674.9	2.67	7.62
					COLD STAB	53.36	151.90	662.2	1.58	8.29
IDLE HC,PPM/HEXANE				15.	HOT TRANS	45.38	132.99	578.8	2.84	9.53
IDLE CO,PCT (MEAS)				.90						
IDLE CO,PCT (SPEC)				.80	1975 FTP	51.11	157.51	642.1	2.15	8.44
OTHER TESTS: MODAL										
1167	1971	DODG	CHAR	283	COLD TRANS	28.58	287.50	516.5	1.06	8.38
					COLD STAB	23.32	335.79	576.2	.38	7.54
IDLE HC,PPM/HEXANE				700.	HOT TRANS	13.27	137.62	524.5	1.73	11.34
IDLE CO,PCT (MEAS)				4.00						
IDLE CO,PCT (SPEC)				2.00	1975 FTP	21.66	271.78	549.8	.89	8.49
OTHER TESTS: MODAL										

EMISSION RESULTS IN GRAMS PER MILE
FUEL ECONOMY IN MILES PER GALLON

APPENDIX E

LISTING OF FEDERAL TEST PROCEDURE RESULTS ON INDIVIDUAL VEHICLES

CALIFORNIA

VEHICLE NUMBER	YEAR	MAKE	MODEL	CID	TEST TYPE	HC	CO	CO2	NOXC	FUEL ECONOMY
1168	1971	FORD	PINT	122	COLD TRANS	4.96	113.63	380.1	4.07	15.45
					COLD STAB	6.86	139.35	364.7	2.52	14.66
IDLE HC,PPM/HEXANE				260.	HOT TRANS	4.72	97.84	324.1	3.34	18.01
IDLE CO,PCT (MEAS)				5.40						
IDLE CO,PCT (SPEC)				1.50	1975 FTP	5.88	122.73	356.8	3.06	15.62
OTHER TESTS: MODAL										
1169	1971	FORD	TORI	302	COLD TRANS	4.33	128.84	719.6	1.97	9.48
					COLD STAB	3.02	88.50	780.6	1.69	9.55
IDLE HC,PPM/HEXANE				150.	HOT TRANS	3.27	61.22	664.6	2.08	11.51
IDLE CO,PCT (MEAS)				2.70						
IDLE CO,PCT (SPEC)				.40	1975 FTP	3.36	89.36	736.4	1.85	10.00
OTHER TESTS: MODAL										
1170	1971	FORD	MAVE	200	COLD TRANS	4.89	79.69	476.0	5.42	14.39
					COLD STAB	4.95	108.27	416.8	1.41	14.73
IDLE HC,PPM/HEXANE				225.	HOT TRANS	6.99	74.40	391.3	4.42	16.74
IDLE CO,PCT (MEAS)				3.60						
IDLE CO,PCT (SPEC)				.80	1975 FTP	5.49	93.14	422.0	3.06	15.15
OTHER TESTS: MODAL										
1171	1971	FORD	CUST	351	COLD TRANS	4.99	113.86	602.8	3.10	11.13
					COLD STAB	2.80	59.75	662.1	1.92	11.60
IDLE HC,PPM/HEXANE				130.	HOT TRANS	2.36	36.97	584.0	3.33	13.66
IDLE CO,PCT (MEAS)				1.75						
IDLE CO,PCT (SPEC)				.60	1975 FTP	3.13	64.67	628.6	2.55	11.99
OTHER TESTS: MODAL										
1172	1971	FORD	RANC	351	COLD TRANS	56.12	183.77	764.3	4.04	7.21
					COLD STAB	42.42	140.32	686.8	2.06	8.52
IDLE HC,PPM/HEXANE				1400.	HOT TRANS	40.43	89.77	712.5	4.87	9.04
IDLE CO,PCT (MEAS)				5.20						
IDLE CO,PCT (SPEC)				.60	1975 FTP	44.70	135.47	709.8	3.23	8.34
OTHER TESTS: MODAL										

EMISSION RESULTS IN GRAMS PER MILE
FUEL ECONOMY IN MILES PER GALLON

APPENDIX E

LISTING OF FEDERAL TEST PROCEDURE RESULTS ON INDIVIDUAL VEHICLES

CALIFORNIA

VEHICLE NUMBER	YEAR	MAKE	MODEL	CID	TEST TYPE	HC	CO	CO2	NOXC	FUEL ECONOMY
1173	1971	MERC	COUG	351	COLD TRANS	4.35	80.77	648.7	5.59	11.24
					COLD STAB	2.70	46.86	628.1	2.77	12.50
IDLE HC,PPM/HEXANE				200.	HOT TRANS	2.62	29.70	568.6	6.30	14.23
IDLE CO,PCT (MEAS)				3.30						
IDLE CO,PCT (SPEC)				.20	1975 FTP	3.02	49.16	616.1	4.31	12.63
OTHER TESTS: MODAL										
1174	1971	OLDS	CUTL	250	COLD TRANS	7.80	138.48	463.3	6.21	12.58
					COLD STAB	2.79	16.02	489.4	6.69	16.96
IDLE HC,PPM/HEXANE				175.	HOT TRANS	2.54	17.60	448.2	8.37	18.34
IDLE CO,PCT (MEAS)				1.80						
IDLE CO,PCT (SPEC)				1.00	1975 FTP	3.75	41.66	472.8	7.05	16.13
OTHER TESTS: MODAL										
1175	1971	PLYM	DUST	225	COLD TRANS	4.67	78.85	397.3	5.52	16.56
					COLD STAB	3.55	47.83	385.4	4.57	18.81
IDLE HC,PPM/HEXANE				200.	HOT TRANS	2.72	28.54	374.1	6.69	20.76
IDLE CO,PCT (MEAS)				2.60						
IDLE CO,PCT (SPEC)				1.00	1975 FTP	3.56	48.95	384.7	5.34	18.77
OTHER TESTS: MODAL										
1176	1971	PONT	LEMA	350	COLD TRANS	5.21	74.95	567.4	5.03	12.65
					COLD STAB	5.63	77.12	490.8	2.24	14.09
IDLE HC,PPM/HEXANE				810.	HOT TRANS	4.09	35.33	474.0	4.32	16.36
IDLE CO,PCT (MEAS)				2.90						
IDLE CO,PCT (SPEC)				99.99	1975 FTP	5.12	65.27	502.0	3.38	14.30
OTHER TESTS: MODAL										
1177	1971	PONT	GRNP	350	COLD TRANS	12.31	169.91	692.3	3.46	8.89
					COLD STAB	8.36	192.93	730.8	1.82	8.37
IDLE HC,PPM/HEXANE				125.	HOT TRANS	7.74	119.49	605.3	3.75	10.85
IDLE CO,PCT (MEAS)				2.00						
IDLE CO,PCT (SPEC)				1.00	1975 FTP	9.01	168.15	688.6	2.68	9.04
OTHER TESTS: MODAL										

EMISSION RESULTS IN GRAMS PER MILE
FUEL ECONOMY IN MILES PER GALLON

APPENDIX E

LISTING OF FEDERAL TEST PROCEDURE RESULTS ON INDIVIDUAL VEHICLES

CALIFORNIA

VEHICLE NUMBER	YEAR	MAKE	MODEL	CID	TEST TYPE	HC	CO	CO2	NOXC	FUEL ECONOMY
1178	1971	DATS	510	97	COLD TRANS	2.43	16.77	333.7	5.57	24.14
					COLD STAB	1.97	16.05	345.6	4.70	23.54
IDLE HC,PPM/HEXANE				110.	HOT TRANS	1.76	9.29	298.1	6.67	27.89
IDLE CO,PCT (MEAS)				1.00						
IDLE CO,PCT (SPEC)				2.00	1975 FTP	2.01	14.35	330.2	5.42	24.72
OTHER TESTS: MODAL										
1179	1971	TOYO	CORO	113	COLD TRANS	2.61	53.52	356.6	6.75	19.77
					COLD STAB	2.64	75.48	333.3	3.13	19.28
IDLE HC,PPM/HEXANE				280.	HOT TRANS	2.23	39.64	330.9	6.63	22.18
IDLE CO,PCT (MEAS)				6.00						
IDLE CO,PCT (SPEC)				99.99	1975 FTP	2.53	61.18	337.4	4.83	20.10
OTHER TESTS: MODAL										
1180	1971	VOLK	SQUA	97	COLD TRANS	6.11	69.23	259.8	3.21	22.88
					COLD STAB	4.15	40.72	279.8	2.15	24.87
IDLE HC,PPM/HEXANE				95.	HOT TRANS	2.90	34.61	251.1	3.32	28.21
IDLE CO,PCT (MEAS)				.20						
IDLE CO,PCT (SPEC)				.70	1975 FTP	4.21	44.92	267.8	2.69	25.23
OTHER TESTS: MODAL										
0181	1970	AMC	GREM	232	COLD TRANS	3.77	35.41	448.8	3.11	17.19
					COLD STAB	2.98	27.62	508.7	2.35	15.80
IDLE HC,PPM/HEXANE				120.	HOT TRANS	2.44	19.85	393.1	3.06	20.54
IDLE CO,PCT (MEAS)				.60						
IDLE CO,PCT (SPEC)				99.99	1975 FTP	3.00	27.10	464.8	2.70	17.17
OTHER TESTS: MODAL										
0182	1970	BUIC	ELEC	455	COLD TRANS	5.90	96.89	722.3	6.32	9.94
					COLD STAB	5.11	69.00	717.5	3.49	10.54
IDLE HC,PPM/HEXANE				35.	HOT TRANS	4.36	41.39	657.6	6.41	12.05
IDLE CO,PCT (MEAS)				.25						
IDLE CO,PCT (SPEC)				1.30	1975 FTP	5.07	67.21	702.2	4.87	10.77
OTHER TESTS: MODAL										

EMISSION RESULTS IN GRAMS PER MILE
FUEL ECONOMY IN MILES PER GALLON

APPENDIX E

LISTING OF FEDERAL TEST PROCEDURE RESULTS ON INDIVIDUAL VEHICLES

CALIFORNIA

VEHICLE NUMBER	YEAR	MAKE	MODEL	CID	TEST TYPE	HC	CO	CO2	NOXC	FUEL ECONOMY
0183	1970	CHEV	NOVA	250	COLD TRANS	4.79	75.71	474.4	6.21	14.58
					COLD STAB	3.44	50.09	427.3	3.30	17.17
IDLE HC,PPM/HEXANE			400.		HOT TRANS	3.14	27.14	410.9	6.05	19.15
IDLE CO,PCT (MEAS)			7.20							
IDLE CO,PCT (SPEC)			1.30		1975 FTP	3.64	49.10	432.5	4.65	17.03
OTHER TESTS: MODAL										
0184	1970	CHEV	CAME	307	COLD TRANS	5.12	77.54	587.7	6.75	12.23
					COLD STAB	3.77	26.12	564.9	4.79	14.36
IDLE HC,PPM/HEXANE			270.		HOT TRANS	2.99	19.07	507.6	6.60	16.22
IDLE CO,PCT (MEAS)			3.00							
IDLE CO,PCT (SPEC)			1.30		1975 FTP	3.83	34.78	553.9	5.69	14.30
OTHER TESTS: MODAL										
0185	1970	CHEV	IMPA	350	COLD TRANS	10.65	167.68	620.1	4.14	9.68
					COLD STAB	2.89	32.36	639.0	3.64	12.70
IDLE HC,PPM/HEXANE			125.		HOT TRANS	3.26	22.37	519.2	8.41	15.72
IDLE CO,PCT (MEAS)			.75							
IDLE CO,PCT (SPEC)			1.30		1975 FTP	4.59	57.49	602.4	5.04	12.55
OTHER TESTS: MODAL										
0186	1970	CHEV	IMPA	350	COLD TRANS	6.15	110.62	553.8	5.50	11.88
					COLD STAB	4.94	66.11	560.4	3.62	13.05
IDLE HC,PPM/HEXANE			270.		HOT TRANS	4.26	35.32	512.6	6.83	15.26
IDLE CO,PCT (MEAS)			5.20							
IDLE CO,PCT (SPEC)			1.30		1975 FTP	5.01	66.87	546.0	4.88	13.31
OTHER TESTS: MODAL										
0187	1970	CHEV	NOVA	307	COLD TRANS	7.22	45.77	442.6	3.20	16.51
					COLD STAB	9.90	55.44	434.4	1.84	16.05
IDLE HC,PPM/HEXANE			750.		HOT TRANS	6.76	37.58	383.4	3.02	19.13
IDLE CO,PCT (MEAS)			8.40							
IDLE CO,PCT (SPEC)			1.30		1975 FTP	8.49	48.58	422.2	2.44	16.89
OTHER TESTS: MODAL										

EMISSION RESULTS IN GRAMS PER MILE
FUEL ECONOMY IN MILES PER GALLON

APPENDIX E

LISTING OF FEDERAL TEST PROCEDURE RESULTS ON INDIVIDUAL VEHICLES

CALIFORNIA

VEHICLE NUMBER	YEAR	MAKE	MODEL	CID	TEST TYPE	HC	CO	CO2	NOXC	FUEL ECONOMY
0188	1970	DODG	DART	225	COLD TRANS	5.19	73.33	471.4	4.48	14.72
					COLD STAB	1.89	29.44	467.8	2.76	17.07
IDLE HC,PPM/HEXANE				170.	HOT TRANS	1.51	12.90	430.5	4.39	19.48
IDLE CO,PCT (MEAS)				3.20						
IDLE CO,PCT (SPEC)				1.30	1975 FTP	2.46	33.96	458.4	3.56	17.08
OTHER TESTS: MODAL										
0189	1970	FORD	MAVE	200	COLD TRANS	3.37	62.17	468.1	7.00	15.40
					COLD STAB	2.65	45.18	485.1	2.35	15.72
IDLE HC,PPM/HEXANE				165.	HOT TRANS	2.67	19.59	424.1	6.56	19.16
IDLE CO,PCT (MEAS)				1.85						
IDLE CO,PCT (SPEC)				.80	1975 FTP	2.80	41.70	465.0	4.45	16.45
OTHER TESTS: MODAL										
0190	1970	FORD	GALA	302	COLD TRANS	6.32	89.39	448.8	5.31	14.57
					COLD STAB	4.84	98.49	463.3	1.99	14.01
IDLE HC,PPM/HEXANE				1050.	HOT TRANS	3.84	50.31	403.9	5.31	17.93
IDLE CO,PCT (MEAS)				3.40						
IDLE CO,PCT (SPEC)				1.00	1975 FTP	4.87	83.47	444.1	3.58	15.02
OTHER TESTS: MODAL										
0191	1970	FORD	LTD	429	COLD TRANS	74.00	109.62	608.1	5.54	8.74
					COLD STAB	16.80	88.47	664.6	4.83	10.36
IDLE HC,PPM/HEXANE				130.	HOT TRANS	5.56	39.18	587.4	8.35	13.31
IDLE CO,PCT (MEAS)				4.90						
IDLE CO,PCT (SPEC)				99.99	1975 FTP	25.51	79.37	631.9	5.94	10.60
OTHER TESTS: MODAL										
0192	1970	FORD	GALA	351	COLD TRANS	8.29	107.55	528.4	6.21	12.26
					COLD STAB	8.20	194.32	487.3	2.75	10.84
IDLE HC,PPM/HEXANE				200.	HOT TRANS	6.58	113.37	465.1	5.33	13.36
IDLE CO,PCT (MEAS)				8.60						
IDLE CO,PCT (SPEC)				2.00	1975 FTP	7.77	154.37	489.7	4.17	11.72
OTHER TESTS: MODAL										

EMISSION RESULTS IN GRAMS PER MILE
FUEL ECONOMY IN MILES PER GALLON

APPENDIX E

LISTING OF FEDERAL TEST PROCEDURE RESULTS ON INDIVIDUAL VEHICLES

CALIFORNIA

VEHICLE NUMBER	YEAR	MAKE	MODEL	CID	TEST TYPE	HC	CO	CO2	NOXC	FUEL ECONOMY
0193	1970	MERC	MARQ	429	COLD TRANS	4.87	33.03	550.7	5.13	14.36
					COLD STAB	5.20	50.12	528.0	3.09	14.24
IDLE HC,PPM/HEXANE				500.	HOT TRANS	3.88	23.70	531.1	6.24	15.29
IDLE CO,PCT (MEAS)				4.60						
IDLE CO,PCT (SPEC)				99.99	1975 FTP	4.77	39.39	533.5	4.37	14.54
OTHER TESTS: MODAL										
0194	1970	OLDS	98	455	COLD TRANS	3.06	49.62	787.6	4.15	10.14
					COLD STAB	3.12	37.37	799.7	2.76	10.22
IDLE HC,PPM/HEXANE				150.	HOT TRANS	2.50	22.84	723.1	4.13	11.57
IDLE CO,PCT (MEAS)				2.20						
IDLE CO,PCT (SPEC)				1.00	1975 FTP	2.94	35.93	776.3	3.42	10.54
OTHER TESTS: MODAL										
0195	1970	PLYM	DUST	318	COLD TRANS	5.69	86.75	518.9	7.12	13.18
					COLD STAB	6.13	128.87	441.5	3.03	13.38
IDLE HC,PPM/HEXANE				220.	HOT TRANS	4.33	55.13	437.3	6.80	16.51
IDLE CO,PCT (MEAS)				5.50						
IDLE CO,PCT (SPEC)				99.99	1975 FTP	5.55	100.08	456.3	4.90	14.06
OTHER TESTS: MODAL										
0196	1970	PLYM	VALI	318	COLD TRANS	6.93	69.40	513.9	9.15	13.76
					COLD STAB	4.87	29.69	493.4	7.39	15.98
IDLE HC,PPM/HEXANE				300.	HOT TRANS	4.87	14.95	472.2	10.72	17.36
IDLE CO,PCT (MEAS)				1.75						
IDLE CO,PCT (SPEC)				.80	1975 FTP	5.29	33.84	491.8	8.66	15.80
OTHER TESTS: MODAL										
0197	1970	PONT	TEMP	250	COLD TRANS	4.91	95.43	482.1	5.50	13.70
					COLD STAB	2.98	48.55	465.6	4.33	16.10
IDLE HC,PPM/HEXANE				210.	HOT TRANS	2.64	28.27	423.5	6.31	18.64
IDLE CO,PCT (MEAS)				6.35						
IDLE CO,PCT (SPEC)				1.00	1975 FTP	3.29	52.67	457.5	5.11	16.12
OTHER TESTS: MODAL										

EMISSION RESULTS IN GRAMS PER MILE
FUEL ECONOMY IN MILES PER GALLON

APPENDIX E

LISTING OF FEDERAL TEST PROCEDURE RESULTS ON INDIVIDUAL VEHICLES

CALIFORNIA

VEHICLE NUMBER	YEAR	MAKE	MODEL	CID	TEST TYPE	HC	CO	CO2	NOXC	FUEL ECONOMY
0198	1970	DATS	510	97	COLD TRANS	8.14	16.47	380.6	3.40	20.53
					COLD STAB	2.66	10.95	379.3	2.25	21.92
IDLE HC,PPM/HEXANE			300.		HOT TRANS	2.50	7.65	322.9	3.88	25.89
IDLE CO,PCT (MEAS)			.75							
IDLE CO,PCT (SPEC)			2.00		1975 FTP	3.74	11.18	364.2	2.93	22.55
OTHER TESTS: MODAL										
0199	1970	TOYO	CORO	113	COLD TRANS	7.14	11.72	366.1	6.08	21.80
					COLD STAB	4.23	23.87	380.8	3.69	20.56
IDLE HC,PPM/HEXANE			55.		HOT TRANS	4.61	16.18	330.3	5.34	23.97
IDLE CO,PCT (MEAS)			.80							
IDLE CO,PCT (SPEC)			99.99		1975 FTP	4.93	19.27	364.0	4.63	21.65
OTHER TESTS: MODAL										
0200	1970	VOLK	VAN	97	COLD TRANS	4.09	51.86	270.6	3.40	24.31
					COLD STAB	4.39	35.14	303.0	3.01	23.85
IDLE HC,PPM/HEXANE			300.		HOT TRANS	3.76	42.04	267.2	3.43	25.71
IDLE CO,PCT (MEAS)			2.20							
IDLE CO,PCT (SPEC)			2.00		1975 FTP	4.16	40.47	286.6	3.20	24.43
OTHER TESTS: MODAL										

EMISSION RESULTS IN GRAMS PER MILE
FUEL ECONOMY IN MILES PER GALLON

APPENDIX E

LISTING OF FEDERAL TEST PROCEDURE RESULTS ON INDIVIDUAL VEHICLES

ST. LOUIS

VEHICLE NUMBER	YEAR	MAKE	MODEL	CID	TEST TYPE	HC	CO	CO2	NOXC	FUEL ECONOMY
7002	1976	CHEV	C10	350	COLD TRANS	3.45	75.55	684.9	3.50	10.90
					COLD STAB	2.28	71.79	591.3	1.06	12.48
IDLE HC,PPM/HEXANE				55.	HOT TRANS	2.81	43.97	625.7	2.90	12.61
IDLE CO,PCT (MEAS)				1.60						
IDLE CO,PCT (SPEC)				99.99	1975 FTP	2.67	64.97	620.0	2.06	12.15
OTHER TESTS: HFET, MODAL, THE 5 SHORT CYCLE TESTS										
7003	1976	CHEV	C10	350	COLD TRANS	2.85	47.76	665.9	3.12	11.83
					COLD STAB	.34	7.84	692.2	1.34	12.58
IDLE HC,PPM/HEXANE				10.	HOT TRANS	.72	11.66	640.7	2.83	13.42
IDLE CO,PCT (MEAS)				0.00						
IDLE CO,PCT (SPEC)				99.99	1975 FTP	.96	17.10	672.7	2.11	12.63
OTHER TESTS: HFET, MODAL, THE 5 SHORT CYCLE TESTS										
7005	1976	DODG	B100	318	COLD TRANS	2.97	25.43	773.2	2.30	10.79
					COLD STAB	.33	7.86	686.6	2.13	12.68
IDLE HC,PPM/HEXANE				4.	HOT TRANS	.40	8.84	622.6	2.63	13.92
IDLE CO,PCT (MEAS)				0.00						
IDLE CO,PCT (SPEC)				.35	1975 FTP	.89	11.74	686.9	2.30	12.53
OTHER TESTS: HFET, MODAL, THE 5 SHORT CYCLE TESTS										
7007	1976	FORD	CLUB	302	COLD TRANS	3.45	48.82	592.2	7.40	13.06
					COLD STAB	2.52	31.04	546.9	3.80	14.70
IDLE HC,PPM/HEXANE				95.	HOT TRANS	2.24	25.03	525.0	7.24	15.53
IDLE CO,PCT (MEAS)				1.25						
IDLE CO,PCT (SPEC)				99.99	1975 FTP	2.63	33.06	550.2	5.48	14.54
OTHER TESTS: HFET, MODAL, THE 5 SHORT CYCLE TESTS										
7008	1976	FORD	F150	360	COLD TRANS	8.27	184.22	557.2	1.62	10.17
					COLD STAB	3.59	47.38	658.7	2.02	11.92
IDLE HC,PPM/HEXANE				45.	HOT TRANS	3.53	45.70	573.8	2.92	13.51
IDLE CO,PCT (MEAS)				.08						
IDLE CO,PCT (SPEC)				99.99	1975 FTP	4.54	75.09	614.6	2.18	11.88
OTHER TESTS: HFET, MODAL, THE 5 SHORT CYCLE TESTS										

EMISSION RESULTS IN GRAMS PER MILE
FUEL ECONOMY IN MILES PER GALLON

APPENDIX E

LISTING OF FEDERAL TEST PROCEDURE RESULTS ON INDIVIDUAL VEHICLES

ST. LOUIS

VEHICLE NUMBER	YEAR	MAKE	MODEL	CID	TEST TYPE	HC	CO	CO2	NOXC	FUEL ECONOMY
7010	1976	TOYO	TRUC	140	COLD TRANS	1.41	16.51	515.7	5.02	16.25
					COLD STAB	.62	8.52	573.7	1.59	15.07
IDLE HC,PPM/HEXANE				18.	HOT TRANS	.75	6.48	470.5	3.65	18.37
IDLE CO,PCT (MEAS)				.26						
IDLE CO,PCT (SPEC)				99.99	1975 FTP	.82	9.61	533.6	2.86	16.10
OTHER TESTS: HFET, MODAL, THE 5 SHORT CYCLE TESTS										
7011	1975	CHEV	C10	350	COLD TRANS	7.63	92.87	702.6	2.27	10.17
					COLD STAB	.68	24.69	830.1	.98	10.19
IDLE HC,PPM/HEXANE				6.	HOT TRANS	2.04	39.55	684.5	2.29	11.78
IDLE CO,PCT (MEAS)				0.00						
IDLE CO,PCT (SPEC)				99.99	1975 FTP	2.48	42.78	764.1	1.60	10.58
OTHER TESTS: MODAL, THE 5 SHORT CYCLE TESTS										
7012	1975	CHEV	TRUC	350	COLD TRANS	2.59	59.31	689.2	4.66	11.23
					COLD STAB	2.78	101.50	607.0	1.53	11.45
IDLE HC,PPM/HEXANE				85.	HOT TRANS	1.61	42.65	581.5	3.52	13.58
IDLE CO,PCT (MEAS)				1.90						
IDLE CO,PCT (SPEC)				99.99	1975 FTP	2.42	76.76	617.0	2.72	11.91
OTHER TESTS: MODAL, THE 5 SHORT CYCLE TESTS										
7013	1975	CHEV	G10V	350	COLD TRANS	3.32	49.85	697.6	3.06	11.29
					COLD STAB	.38	.27	694.8	1.42	12.74
IDLE HC,PPM/HEXANE				15.	HOT TRANS	.84	2.76	648.6	2.73	13.54
IDLE CO,PCT (MEAS)				0.00						
IDLE CO,PCT (SPEC)				99.99	1975 FTP	1.11	11.15	682.7	2.12	12.61
OTHER TESTS: MODAL, THE 5 SHORT CYCLE TESTS										
7014	1975	DODG	C100	318	COLD TRANS	3.98	48.53	617.1	4.15	12.57
					COLD STAB	1.28	24.43	609.6	2.69	13.61
IDLE HC,PPM/HEXANE				10.	HOT TRANS	1.12	12.32	571.4	4.55	14.93
IDLE CO,PCT (MEAS)				.07						
IDLE CO,PCT (SPEC)				.30	1975 FTP	1.79	26.09	600.7	3.50	13.71
OTHER TESTS: MODAL, THE 5 SHORT CYCLE TESTS										

EMISSION RESULTS IN GRAMS PER MILE
FUEL ECONOMY IN MILES PER GALLON

APPENDIX F

LISTING OF FEDERAL TEST PROCEDURE RESULTS ON INDIVIDUAL VEHICLES

ST. LOUIS

VEHICLE NUMBER	YEAR	MAKE	MODEL	CID	TEST TYPE	HC	CO	CO2	NOXC	FUEL ECONOMY
7015	1975	FORD	F100	302	COLD TRANS	1.11	19.05	676.2	3.11	12.51
					COLD STAB	.50	1.14	743.2	1.68	11.89
IDLE HC,PPM/HEXANE			5.		HOT TRANS	.81	6.01	675.9	2.35	12.90
IDLE CO,PCT (MEAS)			0.00							
IDLE CO,PCT (SPEC)			99.99		1975 FTP	.71	6.16	711.1	2.15	12.28
OTHER TESTS: MODAL, THE 5 SHORT CYCLE TESTS										
7016	1975	FORD	F100	300	COLD TRANS	1.28	22.65	593.8	2.16	14.01
					COLD STAB	.42	4.21	561.8	1.79	15.58
IDLE HC,PPM/HEXANE			6.		HOT TRANS	.71	8.48	532.7	2.30	16.19
IDLE CO,PCT (MEAS)			0.00							
IDLE CO,PCT (SPEC)			99.99		1975 FTP	.67	9.17	560.4	2.00	15.38
OTHER TESTS: MODAL, THE 5 SHORT CYCLE TESTS										
7017	1975	FORD	F100	360	COLD TRANS	2.73	64.90	788.0	1.80	9.88
					COLD STAB	1.18	53.21	769.9	1.00	10.35
IDLE HC,PPM/HEXANE			15.		HOT TRANS	1.38	28.97	701.8	1.77	11.81
IDLE CO,PCT (MEAS)			.44							
IDLE CO,PCT (SPEC)			99.99		1975 FTP	1.55	49.00	755.0	1.38	10.60
OTHER TESTS: MODAL, THE 5 SHORT CYCLE TESTS										
6018	1976	AMC	HORN	258	COLD TRANS	1.85	37.24	537.3	7.62	14.75
					COLD STAB	1.22	9.22	512.5	6.22	16.72
IDLE HC,PPM/HEXANE			40.		HOT TRANS	1.19	5.01	460.0	6.77	18.82
IDLE CO,PCT (MEAS)			.26							
IDLE CO,PCT (SPEC)			1.00		1975 FTP	1.34	13.84	503.3	6.66	16.77
OTHER TESTS: HFET, MODAL, THE 5 SHORT CYCLE TESTS										
6019	1976	BUIC	STAW	350	COLD TRANS	1.71	29.41	708.3	5.46	11.68
					COLD STAB	.21	3.15	699.0	2.44	12.60
IDLE HC,PPM/HEXANE			8.		HOT TRANS	.48	12.02	631.4	4.71	13.62
IDLE CO,PCT (MEAS)			0.00							
IDLE CO,PCT (SPEC)			99.99		1975 FTP	.59	10.98	682.5	3.68	12.65
OTHER TESTS: HFET, MODAL, THE 5 SHORT CYCLE TESTS										

EMISSION RESULTS IN GRAMS PER MILE
FUEL ECONOMY IN MILES PER GALLON

APPENDIX E

LISTING OF FEDERAL TEST PROCEDURE RESULTS ON INDIVIDUAL VEHICLES

ST. LOUIS

VEHICLE NUMBER	YEAR	MAKE	MODEL	CID	TEST TYPE	HC	CO	CO2	NOXC	FUEL ECONOMY
6020	1976	BUIC	SKYL	231	COLD TRANS	2.10	31.68	453.2	4.08	17.42
					COLD STAB	1.24	19.59	462.6	1.59	17.85
IDLE HC,PPM/HEXANE				200.	HOT TRANS	1.13	12.83	421.4	2.92	19.94
IDLE CO,PCT (MEAS)				4.40						
IDLE CO,PCT (SPEC)				99.99	1975 FTP	1.39	20.23	449.4	2.46	18.28
OTHER TESTS: HFET, MODAL, THE 5 SHORT CYCLE TESTS										
6021	1976	CADI	FLDO	500	COLD TRANS	3.95	59.42	737.9	2.17	10.52
					COLD STAB	3.10	70.07	759.5	1.95	10.09
IDLE HC,PPM/HEXANE				112.	HOT TRANS	2.05	36.61	684.3	2.41	11.86
IDLE CO,PCT (MEAS)				1.70						
IDLE CO,PCT (SPEC)				99.99	1975 FTP	2.99	58.75	734.6	2.12	10.61
OTHER TESTS: HFET, MODAL, THE 5 SHORT CYCLE TESTS										
6022	1976	CHEV	IMPA	350	COLD TRANS	2.57	37.53	740.6	3.93	10.99
					COLD STAB	.30	6.11	757.7	1.61	11.55
IDLE HC,PPM/HEXANE				7.	HOT TRANS	.46	5.54	675.4	3.27	12.95
IDLE CO,PCT (MEAS)				0.00						
IDLE CO,PCT (SPEC)				99.99	1975 FTP	.81	12.42	731.7	2.54	11.77
OTHER TESTS: HFET, MODAL, THE 5 SHORT CYCLE TESTS										
6023	1976	CHEV	MONT	350	COLD TRANS	2.07	29.13	669.3	3.30	12.30
					COLD STAB	.58	6.06	739.8	1.74	11.82
IDLE HC,PPM/HEXANE				14.	HOT TRANS	.70	8.70	631.4	3.05	13.71
IDLE CO,PCT (MEAS)				.01						
IDLE CO,PCT (SPEC)				99.99	1975 FTP	.92	11.53	695.7	2.42	12.38
OTHER TESTS: HFET, MODAL, THE 5 SHORT CYCLE TESTS										
6024	1976	CHEV	VEGA	140	COLD TRANS	2.77	40.15	468.6	3.14	16.42
					COLD STAB	1.61	50.43	391.2	1.06	18.66
IDLE HC,PPM/HEXANE				32.	HOT TRANS	1.16	25.96	396.6	2.70	20.12
IDLE CO,PCT (MEAS)				.90						
IDLE CO,PCT (SPEC)				99.99	1975 FTP	1.73	41.64	408.6	1.93	18.51
OTHER TESTS: HFET, MODAL, THE 5 SHORT CYCLE TESTS										

EMISSION RESULTS IN GRAMS PER MILE
FUEL ECONOMY IN MILES PER GALLON

APPENDIX E

LISTING OF FEDERAL TEST PROCEDURE RESULTS ON INDIVIDUAL VEHICLES

ST. LOUIS

VEHICLE NUMBER	YEAR	MAKE	MODEL	CID	TEST TYPE	HC	CO	CO2	NOXC	FUEL ECONOMY
6025	1976	CHEV	STAW	400	COLD TRANS	1.74	17.69	811.2	5.60	10.51
					COLD STAB	1.09	18.46	773.4	2.77	11.01
IDLE HC,PPM/HEXANE				15.	HOT TRANS	.58	5.85	713.1	5.21	12.26
IDLE CO,PCT (MEAS)				.50						
IDLE CO,PCT (SPEC)				99.99	1975 FTP	1.08	14.86	764.7	4.02	11.21
OTHER TESTS: HFET, MODAL, THE 5 SHORT CYCLE TESTS										
6026	1976	CHEV	ELCA	305	COLD TRANS	2.32	5.92	586.7	4.50	14.71
					COLD STAB	.33	.41	568.8	2.15	15.56
IDLE HC,PPM/HEXANE				6.	HOT TRANS	.70	1.34	490.8	3.12	17.92
IDLE CO,PCT (MEAS)				0.00						
IDLE CO,PCT (SPEC)				99.99	1975 FTP	.84	1.80	551.2	2.90	15.94
OTHER TESTS: HFET, MODAL, THE 5 SHORT CYCLE TESTS										
6027	1976	CHEV	NOVA	250	COLD TRANS	2.60	22.37	519.8	2.89	15.76
					COLD STAB	1.42	20.63	543.4	2.13	15.29
IDLE HC,PPM/HEXANE				21.	HOT TRANS	1.26	15.51	458.4	2.38	18.23
IDLE CO,PCT (MEAS)				.28						
IDLE CO,PCT (SPEC)				99.99	1975 FTP	1.62	19.59	515.3	2.36	16.10
OTHER TESTS: HFET, MODAL, THE 5 SHORT CYCLE TESTS										
6029	1976	DODG	STAW	318	COLD TRANS	3.29	37.22	531.9	6.52	14.77
					COLD STAB	2.89	33.43	516.3	4.99	15.36
IDLE HC,PPM/HEXANE				165.	HOT TRANS	2.20	16.63	491.7	7.45	16.91
IDLE CO,PCT (MEAS)				1.75						
IDLE CO,PCT (SPEC)				.30	1975 FTP	2.79	29.63	512.8	5.98	15.62
OTHER TESTS: HFET, MODAL, THE 5 SHORT CYCLE TESTS										
6030	1976	DODG	ASPE	225	COLD TRANS	1.92	23.36	499.3	5.84	16.37
					COLD STAB	1.29	19.86	466.3	1.57	17.69
IDLE HC,PPM/HEXANE				170.	HOT TRANS	1.33	13.61	421.7	3.22	19.84
IDLE CO,PCT (MEAS)				.60						
IDLE CO,PCT (SPEC)				.30	1975 FTP	1.43	18.87	460.9	2.90	17.93
OTHER TESTS: HFET, MODAL, THE 5 SHORT CYCLE TESTS										

EMISSION RESULTS IN GRAMS PER MILE
FUEL ECONOMY IN MILES PER GALLON

APPENDIX E

LISTING OF FEDERAL TEST PROCEDURE RESULTS ON INDIVIDUAL VEHICLES

ST. LOUIS

VEHICLE NUMBER	YEAR	MAKE	MODEL	CID	TEST TYPE	HC	CO	CO2	NOXC	FUEL ECONOMY
6031	1976	FORD	MUST	140	COLD TRANS	1.30	23.17	486.5	3.18	16.84
					COLD STAB	.36	.72	475.5	1.60	18.58
IDLE HC,PPM/HEXANE			30.		HOT TRANS	.42	1.83	414.5	2.98	21.20
IDLE CO,PCT (MEAS)			0.00							
IDLE CO,PCT (SPEC)			99.99		1975 FTP	.57	5.64	461.1	2.30	18.81
OTHER TESTS: HFET, MODAL, THE 5 SHORT CYCLE TESTS										
6032	1976	FORD	STAW	400	COLD TRANS	3.21	49.54	842.3	1.34	9.54
					COLD STAB	.89	12.52	787.4	1.36	10.96
IDLE HC,PPM/HEXANE			260.		HOT TRANS	1.58	15.22	697.4	1.84	12.22
IDLE CO,PCT (MEAS)			4.80							
IDLE CO,PCT (SPEC)			99.99		1975 FTP	1.56	20.88	774.1	1.49	10.93
OTHER TESTS: HFET, MODAL, THE 5 SHORT CYCLE TESTS										
6033	1976	FORD	STAW	351	COLD TRANS	1.54	35.12	684.0	1.32	11.93
					COLD STAB	.51	1.11	699.3	2.14	12.63
IDLE HC,PPM/HEXANE			12.		HOT TRANS	.70	5.43	648.5	2.15	13.46
IDLE CO,PCT (MEAS)			0.00							
IDLE CO,PCT (SPEC)			99.99		1975 FTP	.77	9.29	682.3	1.98	12.69
OTHER TESTS: HFET, MODAL, THE 5 SHORT CYCLE TESTS										
6034	1976	FORD	GRAN	250	COLD TRANS	2.45	16.82	653.4	2.21	12.91
					COLD STAB	.78	.22	599.7	1.25	14.73
IDLE HC,PPM/HEXANE			23.		HOT TRANS	.88	1.22	545.9	1.77	16.12
IDLE CO,PCT (MEAS)			0.00							
IDLE CO,PCT (SPEC)			99.99		1975 FTP	1.15	3.91	596.0	1.59	14.65
OTHER TESTS: HFET, MODAL, THE 5 SHORT CYCLE TESTS										
6035	1976	FORD	GRAN	302	COLD TRANS	2.31	23.96	616.4	2.38	13.42
					COLD STAB	.67	.57	613.1	1.52	14.41
IDLE HC,PPM/HEXANE			17.		HOT TRANS	.84	1.26	548.1	1.99	16.06
IDLE CO,PCT (MEAS)			0.00							
IDLE CO,PCT (SPEC)			99.99		1975 FTP	1.05	5.58	596.0	1.82	14.60
OTHER TESTS: HFET, MODAL, THE 5 SHORT CYCLE TESTS										

EMISSION RESULTS IN GRAMS PER MILE
FUEL ECONOMY IN MILES PER GALLON

APPENDIX E

LISTING OF FEDERAL TEST PROCEDURE RESULTS ON INDIVIDUAL VEHICLES

ST. LOUIS

VEHICLE NUMBER	YEAR	MAKE	MODEL	CID	TEST TYPE	HC	CO	CO2	NOXC	FUEL ECONOMY
6036	1976	FORD	TORI	351	COLD TRANS	1.21	26.28	698.7	1.36	11.93
					COLD STAB	.53	2.70	710.5	1.51	12.39
IDLE HC,PPM/HEXANE				25.	HOT TRANS	.71	12.41	652.9	2.00	13.16
IDLE CO,PCT (MEAS)				0.00						
IDLE CO,PCT (SPEC)				99.99	1975 FTP	.72	10.20	692.3	1.61	12.49
OTHER TESTS: HFET, MODAL, THE 5 SHORT CYCLE TESTS										
6037	1976	MERC	COME	250	COLD TRANS	2.21	11.85	641.9	2.03	13.30
					COLD STAB	.86	.22	571.2	.81	15.46
IDLE HC,PPM/HEXANE				35.	HOT TRANS	1.22	3.32	550.2	1.96	15.87
IDLE CO,PCT (MEAS)				0.00						
IDLE CO,PCT (SPEC)				99.99	1975 FTP	1.24	3.46	580.0	1.37	15.06
OTHER TESTS: HFET, MODAL, THE 5 SHORT CYCLE TESTS										
6038	1976	MERC	MONA	200	COLD TRANS	.94	6.21	615.7	2.53	14.12
					COLD STAB	.51	0.00	550.1	1.51	16.09
IDLE HC,PPM/HEXANE				15.	HOT TRANS	.74	.62	486.6	1.87	18.12
IDLE CO,PCT (MEAS)				0.00						
IDLE CO,PCT (SPEC)				99.99	1975 FTP	.66	1.45	546.3	1.82	16.12
OTHER TESTS: HFET, MODAL, THE 5 SHORT CYCLE TESTS										
6039	1976	OLDS	CUTL	260	COLD TRANS	1.46	12.83	648.3	4.39	13.19
					COLD STAB	.24	1.39	633.9	2.06	13.94
IDLE HC,PPM/HEXANE				5.	HOT TRANS	.37	1.61	577.1	3.72	15.28
IDLE CO,PCT (MEAS)				0.00						
IDLE CO,PCT (SPEC)				99.99	1975 FTP	.53	3.81	621.4	3.00	14.11
OTHER TESTS: HFET, MODAL, THE 5 SHORT CYCLE TESTS										
6040	1976	OLDS	CUTL	350	COLD TRANS	4.17	42.29	611.8	2.22	12.84
					COLD STAB	3.85	55.17	556.1	1.37	13.55
IDLE HC,PPM/HEXANE				175.	HOT TRANS	2.30	25.82	509.2	1.78	15.93
IDLE CO,PCT (MEAS)				2.30						
IDLE CO,PCT (SPEC)				99.99	1975 FTP	3.49	44.51	554.8	1.66	13.96
OTHER TESTS: HFET, MODAL, THE 5 SHORT CYCLE TESTS										

EMISSION RESULTS IN GRAMS PER MILE
FUEL ECONOMY IN MILES PER GALLON

APPENDIX E

LISTING OF FEDERAL TEST PROCEDURE RESULTS ON INDIVIDUAL VEHICLES

ST. LOUIS

VEHICLE NUMBER	YEAR	MAKE	MODEL	CID	TEST TYPE	HC	CO	CO2	NOXC	FUEL ECONOMY
6041	1976	OLDS	DELT	455	COLD TRANS	4.25	34.73	726.7	2.32	11.17
					COLD STAB	6.14	62.01	645.8	1.17	11.64
IDLE HC.PPM/HEXANE				280.	HOT TRANS	3.62	30.92	605.2	1.90	13.34
IDLE CO.PCT (MEAS)				2.64						
IDLE CO.PCT (SPEC)				99.99	1975 FTP	5.06	47.92	651.4	1.61	11.95
OTHER TESTS: HFET, MODAL, THE 5 SHORT CYCLE TESTS										
6042	1976	PLYM	DUST	225	COLD TRANS	4.51	48.51	393.4	2.83	18.34
					COLD STAB	2.39	42.70	405.0	1.73	18.50
IDLE HC.PPM/HEXANE				75.	HOT TRANS	.50	30.93	367.6	2.02	21.24
IDLE CO.PCT (MEAS)				1.10						
IDLE CO.PCT (SPEC)				.30	1975 FTP	2.31	40.68	392.4	2.04	19.14
OTHER TESTS: HFET, MODAL, THE 5 SHORT CYCLE TESTS										
6043	1976	PLYM	VOLA	318	COLD TRANS	5.90	39.21	592.9	2.19	13.18
					COLD STAB	4.54	12.67	554.9	1.35	15.06
IDLE HC.PPM/HEXANE				65.	HOT TRANS	4.57	6.41	537.6	1.84	15.79
IDLE CO.PCT (MEAS)				.03						
IDLE CO.PCT (SPEC)				.30	1975 FTP	4.83	16.42	558.0	1.66	14.81
OTHER TESTS: HFET, MODAL, THE 5 SHORT CYCLE TESTS										
6044	1976	PONT	LEMA	350	COLD TRANS	1.18	12.02	628.8	4.42	13.63
					COLD STAB	.08	0.00	566.8	2.52	15.65
IDLE HC.PPM/HEXANE				25.	HOT TRANS	.11	.34	534.8	3.95	16.57
IDLE CO.PCT (MEAS)				0.00						
IDLE CO.PCT (SPEC)				99.99	1975 FTP	.31	2.57	570.8	3.30	15.41
OTHER TESTS: HFET, MODAL, THE 5 SHORT CYCLE TESTS										
6045	1976	PONT	GRNP	400	COLD TRANS	2.97	40.12	710.0	2.16	11.34
					COLD STAB	2.22	20.42	664.4	1.99	12.62
IDLE HC.PPM/HEXANE				4.	HOT TRANS	1.94	16.27	604.4	2.21	13.95
IDLE CO.PCT (MEAS)				.02						
IDLE CO.PCT (SPEC)				99.99	1975 FTP	2.30	23.34	657.4	2.09	12.65
OTHER TESTS: HFET, MODAL, THE 5 SHORT CYCLE TESTS										

EMISSION RESULTS IN GRAMS PER MILE
FUEL ECONOMY IN MILES PER GALLON

APPENDIX E

LISTING OF FEDERAL TEST PROCEDURE RESULTS ON INDIVIDUAL VEHICLES

ST. LOUIS

VEHICLE NUMBER	YEAR	MAKE	MODEL	CID	TEST TYPE	HC	CO	CO2	NOXC	FUEL ECONOMY
6046	1976	DATS	B210	85	COLD TRANS	2.10	19.38	335.0	3.30	23.85
					COLD STAB	1.44	11.32	355.7	1.38	23.48
IDLE HC,PPM/HEXANE				10.	HOT TRANS	1.74	11.72	303.0	2.84	27.15
IDLE CO,PCT (MEAS)				.09						
IDLE CO,PCT (SPEC)				2.00	1975 FTP	1.65	13.09	337.1	2.18	24.46
OTHER TESTS: HFET, MODAL, THE 5 SHORT CYCLE TESTS										
6047	1976	DATS	B210	85	COLD TRANS	1.62	19.70	369.2	3.70	21.90
					COLD STAB	1.37	8.70	321.9	2.09	26.11
IDLE HC,PPM/HEXANE				35.	HOT TRANS	1.29	7.97	302.3	2.84	27.83
IDLE CO,PCT (MEAS)				.24						
IDLE CO,PCT (SPEC)				1.50	1975 FTP	1.40	10.76	326.3	2.63	25.53
OTHER TESTS: HFET, MODAL, THE 5 SHORT CYCLE TESTS										
6048	1976	TOYO	CORO	97	COLD TRANS	2.07	20.77	396.9	5.71	20.35
					COLD STAB	1.21	13.84	368.7	2.60	22.51
IDLE HC,PPM/HEXANE				7.	HOT TRANS	1.41	10.75	346.0	4.76	24.16
IDLE CO,PCT (MEAS)				1.10						
IDLE CO,PCT (SPEC)				99.99	1975 FTP	1.44	14.42	368.3	3.83	22.44
OTHER TESTS: HFET, MODAL, THE 5 SHORT CYCLE TESTS										
6049	1976	TOYO	CELI	133	COLD TRANS	2.06	26.15	479.5	5.07	16.84
					COLD STAB	.67	12.79	583.2	1.52	14.66
IDLE HC,PPM/HEXANE				2.	HOT TRANS	1.15	15.71	428.5	3.92	19.43
IDLE CO,PCT (MEAS)				.03						
IDLE CO,PCT (SPEC)				99.99	1975 FTP	1.09	16.34	519.6	2.90	16.17
OTHER TESTS: HFET, MODAL, THE 5 SHORT CYCLE TESTS										
6050	1976	VOLK	SEDA	97	COLD TRANS	5.66	119.98	244.9	.50	19.66
					COLD STAB	3.51	90.79	285.1	.50	20.22
IDLE HC,PPM/HEXANE				105.	HOT TRANS	3.19	84.72	239.5	.51	23.19
IDLE CO,PCT (MEAS)				1.36						
IDLE CO,PCT (SPEC)				1.10	1975 FTP	3.87	95.14	264.4	.50	20.83
OTHER TESTS: HFET, MODAL, THE 5 SHORT CYCLE TESTS										

EMISSION RESULTS IN GRAMS PER MILE
FUEL ECONOMY IN MILES PER GALLON

APPENDIX E

LISTING OF FEDERAL TEST PROCEDURE RESULTS ON INDIVIDUAL VEHICLES

ST. LOUIS

VEHICLE NUMBER	YEAR	MAKE	MODEL	CID	TEST TYPE	HC	CO	CO2	NOXC	FUEL ECONOMY
6051	1976	VOLK	RABB	97	COLD TRANS	3.97	65.93	310.4	2.38	20.81
					COLD STAB	1.77	19.78	364.6	2.47	22.12
IDLE HC,PPM/HEXANE				18.	HOT TRANS	1.84	13.03	292.9	3.48	27.80
IDLE CO,PCT (MEAS)				.21						
IDLE CO,PCT (SPEC)				1.50	1975 FTP	2.24	27.44	333.9	2.73	23.11
OTHER TESTS: HFET, MODAL, THE 5 SHORT CYCLE TESTS										
6201	1976	AMC	STAW	304	COLD TRANS	1.84	34.51	615.8	2.54	13.13
					COLD STAB	.47	1.77	647.9	2.15	13.61
IDLE HC,PPM/HEXANE				14.	HOT TRANS	.75	3.39	551.3	1.83	15.88
IDLE CO,PCT (MEAS)				0.00						
IDLE CO,PCT (SPEC)				99.99	1975 FTP	.83	8.95	614.9	2.15	14.05
OTHER TESTS: THE 5 SHORT CYCLE TESTS										
6202	1976	AMC	HORN	258	COLD TRANS	1.23	12.72	530.9	4.42	16.00
					COLD STAB	.88	4.37	518.5	2.63	16.81
IDLE HC,PPM/HEXANE				10.	HOT TRANS	1.20	5.49	495.9	2.75	17.46
IDLE CO,PCT (MEAS)				.01						
IDLE CO,PCT (SPEC)				1.00	1975 FTP	1.04	6.39	514.9	3.03	16.80
OTHER TESTS: THE 5 SHORT CYCLE TESTS										
6203	1976	AMC	MATA	304	COLD TRANS	2.52	37.92	645.0	2.44	12.46
					COLD STAB	.33	.44	664.5	1.77	13.32
IDLE HC,PPM/HEXANE				10.	HOT TRANS	.64	9.02	571.5	2.10	15.10
IDLE CO,PCT (MEAS)				0.00						
IDLE CO,PCT (SPEC)				99.99	1975 FTP	.87	10.50	635.1	2.00	13.56
OTHER TESTS: THE 5 SHORT CYCLE TESTS										
6204	1976	AMC	HORN	232	COLD TRANS	3.68	109.07	421.7	1.47	14.68
					COLD STAB	1.52	30.88	467.4	3.75	17.05
IDLE HC,PPM/HEXANE				10.	HOT TRANS	2.43	31.57	408.7	4.21	19.05
IDLE CO,PCT (MEAS)				.12						
IDLE CO,PCT (SPEC)				.50	1975 FTP	2.21	47.16	442.0	3.41	16.97
OTHER TESTS: THE 5 SHORT CYCLE TESTS										

EMISSION RESULTS IN GRAMS PER MILE
FUEL ECONOMY IN MILES PER GALLON

APPENDIX E

LISTING OF FEDERAL TEST PROCEDURE RESULTS ON INDIVIDUAL VEHICLES

ST. LOUIS

VEHICLE NUMBER	YEAR	MAKE	MODEL	CID	TEST TYPE	HC	CO	CO2	NOXC	FUEL ECONOMY
6205	1976	BUIC	CNTY	231	COLD TRANS	3.96	52.97	500.7	8.25	14.88
					COLD STAB	1.95	61.26	482.9	5.24	15.16
IDLE HC,PPM/HEXANE			205.		HOT TRANS	2.01	29.88	411.3	7.01	19.10
IDLE CO,PCT (MEAS)			4.15							
IDLE CO,PCT (SPEC)			99.99		1975 FTP	2.38	50.99	467.0	6.35	16.00
OTHER TESTS: THE 5 SHORT CYCLE TESTS										
6206	1976	BUIC	LASA	350	COLD TRANS	2.53	50.31	784.3	3.90	10.19
					COLD STAB	.23	3.49	733.5	2.32	12.00
IDLE HC,PPM/HEXANE			10.		HOT TRANS	.69	11.60	640.7	3.63	13.43
IDLE CO,PCT (MEAS)			0.00							
IDLE CO,PCT (SPEC)			99.99		1975 FTP	.83	15.34	718.6	3.00	11.91
OTHER TESTS: THE 5 SHORT CYCLE TESTS										
6207	1976	BUIC	REGA	350	COLD TRANS	1.25	22.67	695.9	3.22	12.07
					COLD STAB	.09	.09	711.6	1.83	12.47
IDLE HC,PPM/HEXANE			6.		HOT TRANS	.30	6.89	626.9	2.60	13.90
IDLE CO,PCT (MEAS)			0.00							
IDLE CO,PCT (SPEC)			99.99		1975 FTP	.39	6.59	685.3	2.33	12.74
OTHER TESTS: THE 5 SHORT CYCLE TESTS										
6208	1976	BUIC	STAW	350	COLD TRANS	1.65	23.77	735.3	4.36	11.41
					COLD STAB	.27	1.21	722.0	2.06	12.25
IDLE HC,PPM/HEXANE			7.		HOT TRANS	.66	4.34	662.4	3.76	13.22
IDLE CO,PCT (MEAS)			0.00							
IDLE CO,PCT (SPEC)			99.99		1975 FTP	.66	6.71	708.5	3.00	12.31
OTHER TESTS: THE 5 SHORT CYCLE TESTS										
6209	1976	BUIC	LESA	350	COLD TRANS	1.51	35.44	700.2	3.05	11.67
					COLD STAB	.27	6.87	710.8	1.07	12.28
IDLE HC,PPM/HEXANE			10.		HOT TRANS	.56	13.30	635.3	2.46	13.49
IDLE CO,PCT (MEAS)			.01							
IDLE CO,PCT (SPEC)			99.99		1975 FTP	.61	14.51	688.0	1.86	12.45
OTHER TESTS: THE 5 SHORT CYCLE TESTS										

EMISSION RESULTS IN GRAMS PER MILE
FUEL ECONOMY IN MILES PER GALLON

APPENDIX E

LISTING OF FEDERAL TEST PROCEDURE RESULTS ON INDIVIDUAL VEHICLES

ST. LOUIS

VEHICLE NUMBER	YEAR	MAKE	MODEL	CID	TEST TYPE	HC	CO	CO2	NOXC	FUEL ECONOMY
6210	1976	BUIC	SKYH	231	COLD TRANS	3.66	70.58	430.8	2.64	16.04
					COLD STAB	2.28	50.20	414.4	.65	17.73
IDLE HC,PPM/HEXANE				75.	HOT TRANS	1.32	20.54	411.3	2.23	19.82
IDLE CO,PCT (MEAS)				.60						
IDLE CO,PCT (SPEC)				99.99	1975 FTP	2.30	46.30	416.9	1.49	17.86
OTHER TESTS: THE 5 SHORT CYCLE TESTS										
6211	1976	BUIC	SKYL	231	COLD TRANS	1.40	15.62	501.4	4.42	16.74
					COLD STAB	.20	2.08	468.4	1.25	18.79
IDLE HC,PPM/HEXANE				40.	HOT TRANS	.48	3.32	448.8	2.49	19.48
IDLE CO,PCT (MEAS)				0.00						
IDLE CO,PCT (SPEC)				99.99	1975 FTP	.52	5.21	469.8	2.24	18.50
OTHER TESTS: THE 5 SHORT CYCLE TESTS										
6212	1976	CADI	SEVI	350	COLD TRANS	3.10	33.98	646.2	4.52	12.51
					COLD STAB	.35	1.04	625.9	2.08	14.12
IDLE HC,PPM/HEXANE				2.	HOT TRANS	.65	1.66	536.9	3.54	16.39
IDLE CO,PCT (MEAS)				0.00						
IDLE CO,PCT (SPEC)				99.99	1975 FTP	1.00	7.99	605.8	2.98	14.28
OTHER TESTS: THE 5 SHORT CYCLE TESTS										
6213	1976	CADI	FLEE	500	COLD TRANS	1.65	17.34	840.2	2.29	10.17
					COLD STAB	1.52	23.94	773.0	1.44	10.88
IDLE HC,PPM/HEXANE				70.	HOT TRANS	1.19	12.58	739.3	2.13	11.63
IDLE CO,PCT (MEAS)				.70						
IDLE CO,PCT (SPEC)				99.99	1975 FTP	1.45	19.48	777.7	1.80	10.92
OTHER TESTS: THE 5 SHORT CYCLE TESTS										
6215	1976	CADI	DEVI	500	COLD TRANS	1.63	22.23	894.2	1.60	9.50
					COLD STAB	.31	.04	833.1	1.44	10.64
IDLE HC,PPM/HEXANE				7.	HOT TRANS	.45	3.21	772.6	1.60	11.39
IDLE CO,PCT (MEAS)				0.00						
IDLE CO,PCT (SPEC)				99.99	1975 FTP	.62	5.47	829.2	1.52	10.57
OTHER TESTS: THE 5 SHORT CYCLE TESTS										

EMISSION RESULTS IN GRAMS PER MILE
FUEL ECONOMY IN MILES PER GALLON

APPENDIX E

LISTING OF FEDERAL TEST PROCEDURE RESULTS ON INDIVIDUAL VEHICLES

ST. LOUIS

VEHICLE NUMBER	YEAR	MAKE	MODEL	CID	TEST TYPE	HC	CO	CO2	NOXC	FUEL ECONOMY
6216	1976	CHEV	CHET	97	COLD TRANS	3.43	37.72	327.3	3.55	22.33
					COLD STAB	2.79	31.40	364.0	2.54	21.02
IDLE HC,PPM/HEXANE				210.	HOT TRANS	2.10	22.08	304.9	2.75	25.64
IDLE CO,PCT (MEAS)				2.40						
IDLE CO,PCT (SPEC)				99.99	1975 FTP	2.74	30.16	340.3	2.81	22.39
OTHER TESTS: THE 5 SHORT CYCLE TESTS										
6217	1976	CHEV	CAPR	350	COLD TRANS	3.60	83.50	634.6	4.91	11.42
					COLD STAB	2.86	128.46	592.0	2.31	11.05
IDLE HC,PPM/HEXANE				50.	HOT TRANS	1.81	59.24	573.2	4.84	13.21
IDLE CO,PCT (MEAS)				1.45						
IDLE CO,PCT (SPEC)				99.99	1975 FTP	2.73	100.32	595.6	3.54	11.65
OTHER TESTS: THE 5 SHORT CYCLE TESTS										
6218	1976	CHEV	MONT	350	COLD TRANS	1.16	15.01	685.7	2.94	12.45
					COLD STAB	.21	.76	695.4	1.46	12.73
IDLE HC,PPM/HEXANE				7.	HOT TRANS	.36	1.10	627.8	2.73	14.07
IDLE CO,PCT (MEAS)				0.00						
IDLE CO,PCT (SPEC)				99.99	1975 FTP	.44	3.79	675.0	2.11	13.01
OTHER TESTS: THE 5 SHORT CYCLE TESTS										
6219	1976	CHEV	STAW	350	COLD TRANS	3.16	57.58	653.2	4.13	11.77
					COLD STAB	2.26	62.11	647.8	1.37	11.79
IDLE HC,PPM/HEXANE				20.	HOT TRANS	1.24	30.26	613.4	3.05	13.35
IDLE CO,PCT (MEAS)				.30						
IDLE CO,PCT (SPEC)				99.99	1975 FTP	2.17	52.49	639.5	2.40	12.18
OTHER TESTS: THE 5 SHORT CYCLE TESTS										
6220	1976	CHEV	CAMA	250	COLD TRANS	1.00	13.17	497.9	4.17	17.01
					COLD STAB	.26	.14	494.2	2.68	17.92
IDLE HC,PPM/HEXANE				5.	HOT TRANS	.45	.32	483.1	3.11	18.30
IDLE CO,PCT (MEAS)				0.00						
IDLE CO,PCT (SPEC)				99.99	1975 FTP	.46	2.87	492.0	3.11	17.82
OTHER TESTS: THE 5 SHORT CYCLE TESTS										

EMISSION RESULTS IN GRAMS PER MILE
FUEL ECONOMY IN MILES PER GALLON

APPENDIX E

LISTING OF FEDERAL TEST PROCEDURE RESULTS ON INDIVIDUAL VEHICLES

ST. LOUIS

VEHICLE NUMBER	YEAR	MAKE	MODEL	CID	TEST TYPE	HC	CO	CO2	NOXC	FUEL ECONOMY
6221	1976	CHEV	STAW	350	COLD TRANS	4.19	72.03	645.0	3.70	11.51
					COLD STAB	.37	9.78	664.4	1.61	13.03
IDLE HC,PPM/HEXANE			0.		HOT TRANS	.67	14.10	597.9	3.49	14.26
IDLE CO,PCT (MEAS)			0.00							
IDLE CO,PCT (SPEC)			99.99		1975 FTP	1.24	23.77	642.2	2.55	12.98
OTHER TESTS: THE 5 SHORT CYCLE TESTS										
6222	1976	CHEV	CAMA	305	COLD TRANS	3.44	47.01	552.2	7.11	13.93
					COLD STAB	2.44	48.91	542.3	3.75	14.16
IDLE HC,PPM/HEXANE			88.		HOT TRANS	1.92	26.98	501.7	6.49	16.13
IDLE CO,PCT (MEAS)			1.00							
IDLE CO,PCT (SPEC)			99.99		1975 FTP	2.50	42.53	533.2	5.19	14.60
OTHER TESTS: THE 5 SHORT CYCLE TESTS										
6223	1976	CHEV	CAPR	454	COLD TRANS	2.14	13.30	740.3	2.42	11.56
					COLD STAB	.26	.23	759.9	1.13	11.66
IDLE HC,PPM/HEXANE			10.		HOT TRANS	.62	2.85	701.8	2.21	12.53
IDLE CO,PCT (MEAS)			0.00							
IDLE CO,PCT (SPEC)			99.99		1975 FTP	.74	3.63	740.0	1.69	11.86
OTHER TESTS: THE 5 SHORT CYCLE TESTS										
6224	1976	CHEV	MONT	350	COLD TRANS	4.00	63.74	597.3	2.61	12.50
					COLD STAB	2.88	92.36	565.7	.88	12.33
IDLE HC,PPM/HEXANE			40.		HOT TRANS	1.72	37.08	564.7	2.31	14.12
IDLE CO,PCT (MEAS)			.70							
IDLE CO,PCT (SPEC)			99.99		1975 FTP	2.79	71.39	571.9	1.63	12.81
OTHER TESTS: THE 5 SHORT CYCLE TESTS										
6225	1976	CHEV	IMPA	350	COLD TRANS	3.84	63.66	629.7	2.84	11.96
					COLD STAB	1.65	30.85	650.3	1.35	12.61
IDLE HC,PPM/HEXANE			12.		HOT TRANS	1.58	26.56	598.3	2.46	13.76
IDLE CO,PCT (MEAS)			.01							
IDLE CO,PCT (SPEC)			99.99		1975 FTP	2.08	36.43	631.9	1.96	12.76
OTHER TESTS: THE 5 SHORT CYCLE TESTS										

EMISSION RESULTS IN GRAMS PER MILE
FUEL ECONOMY IN MILES PER GALLON

APPENDIX E

LISTING OF FEDERAL TEST PROCEDURE RESULTS ON INDIVIDUAL VEHICLES

ST. LOUIS

VEHICLE NUMBER	YEAR	MAKE	MODEL	CID	TEST TYPE	HC	CO	CO2	NOXC	FUEL ECONOMY
6226	1976	CHEV	CAMA	305	COLD TRANS	1.92	18.81	621.3	4.21	13.51
					COLD STAB	.19	1.40	616.3	1.72	14.34
IDLE HC,PPM/HEXANE				4.	HOT TRANS	.54	11.35	547.3	2.34	15.66
IDLE CO,PCT (MEAS)				0.00						
IDLE CO,PCT (SPEC)				99.99	1975 FTP	.64	7.69	598.5	2.40	14.49
OTHER TESTS: THE 5 SHORT CYCLE TESTS										
6227	1976	CHEV	MONT	350	COLD TRANS	3.21	28.75	633.4	7.22	12.89
					COLD STAB	.64	14.64	612.1	3.05	13.93
IDLE HC,PPM/HEXANE				10.	HOT TRANS	.56	6.88	565.9	6.56	15.34
IDLE CO,PCT (MEAS)				0.00						
IDLE CO,PCT (SPEC)				99.99	1975 FTP	1.15	15.43	603.9	4.87	14.05
OTHER TESTS: THE 5 SHORT CYCLE TESTS										
6228	1976	CHEV	VEGA	140	COLD TRANS	3.28	40.05	395.6	1.75	18.93
					COLD STAB	1.18	30.02	438.9	.58	18.12
IDLE HC,PPM/HEXANE				5.	HOT TRANS	1.09	23.13	349.6	1.46	22.79
IDLE CO,PCT (MEAS)				.06						
IDLE CO,PCT (SPEC)				99.99	1975 FTP	1.59	30.20	405.6	1.06	19.37
OTHER TESTS: THE 5 SHORT CYCLE TESTS										
6229	1976	CHEV	MONZ	140	COLD TRANS	2.59	37.28	448.0	1.77	17.24
					COLD STAB	.58	10.83	536.5	1.39	15.98
IDLE HC,PPM/HEXANE				35.	HOT TRANS	.83	12.88	406.1	1.70	20.69
IDLE CO,PCT (MEAS)				.49						
IDLE CO,PCT (SPEC)				99.99	1975 FTP	1.06	16.83	482.7	1.55	17.32
OTHER TESTS: THE 5 SHORT CYCLE TESTS										
6230	1976	CHEV	MONT	350	COLD TRANS	1.95	29.50	659.4	2.66	12.47
					COLD STAB	.16	4.20	661.8	1.19	13.27
IDLE HC,PPM/HEXANE				22.	HOT TRANS	.38	3.23	558.9	2.25	15.70
IDLE CO,PCT (MEAS)				0.00						
IDLE CO,PCT (SPEC)				99.99	1975 FTP	.59	9.14	633.2	1.78	13.67
OTHER TESTS: THE 5 SHORT CYCLE TESTS										

EMISSION RESULTS IN GRAMS PER MILE
FUEL ECONOMY IN MILES PER GALLON

APPENDIX E

LISTING OF FEDERAL TEST PROCEDURE RESULTS ON INDIVIDUAL VEHICLES

ST. LOUIS

VEHICLE NUMBER	YEAR	MAKE	MODEL	CID	TEST TYPE	HC	CO	CO2	NOXC	FUEL ECONOMY
6231	1976	CHEV	CAMA	350	COLD TRANS	3.65	72.93	562.9	3.47	12.88
					COLD STAB	2.64	61.44	571.6	1.15	13.12
IDLE HC,PPM/HEXANE				85.	HOT TRANS	2.50	54.90	510.4	2.65	14.68
IDLE CO,PCT (MEAS)				.80						
IDLE CO,PCT (SPEC)				99.99	1975 FTP	2.81	62.02	553.1	2.03	13.46
OTHER TESTS: THE 5 SHORT CYCLE TESTS										
6232	1976	CHEV	CAMA	305	COLD TRANS	1.75	18.73	552.8	3.31	15.10
					COLD STAB	.32	1.16	563.2	1.75	15.68
IDLE HC,PPM/HEXANE				10.	HOT TRANS	.67	6.14	498.0	2.32	17.41
IDLE CO,PCT (MEAS)				0.00						
IDLE CO,PCT (SPEC)				99.99	1975 FTP	.71	6.14	543.2	2.22	15.99
OTHER TESTS: THE 5 SHORT CYCLE TESTS										
6233	1976	CHEV	MAL1	350	COLD TRANS	3.76	80.34	574.8	2.01	12.45
					COLD STAB	3.04	86.24	588.0	.95	12.11
IDLE HC,PPM/HEXANE				3.	HOT TRANS	2.29	41.77	547.3	2.26	14.31
IDLE CO,PCT (MEAS)				0.00						
IDLE CO,PCT (SPEC)				99.99	1975 FTP	2.98	72.89	574.2	1.53	12.71
OTHER TESTS: THE 5 SHORT CYCLE TESTS										
6234	1976	CHEV	NOVA	305	COLD TRANS	1.96	23.22	558.4	3.72	14.77
					COLD STAB	2.12	31.34	551.9	1.45	14.60
IDLE HC,PPM/HEXANE				25.	HOT TRANS	1.56	15.94	504.8	3.48	16.60
IDLE CO,PCT (MEAS)				.24						
IDLE CO,PCT (SPEC)				99.99	1975 FTP	1.93	25.47	540.4	2.47	15.13
OTHER TESTS: THE 5 SHORT CYCLE TESTS										
6235	1976	CHEV	CHET	140	COLD TRANS	1.06	25.58	392.5	2.67	20.36
					COLD STAB	.10	.93	386.5	3.16	22.86
IDLE HC,PPM/HEXANE				5.	HOT TRANS	.28	5.31	367.5	2.70	23.56
IDLE CO,PCT (MEAS)				0.00						
IDLE CO,PCT (SPEC)				99.99	1975 FTP	.34	7.19	382.5	2.93	22.47
OTHER TESTS: THE 5 SHORT CYCLE TESTS										

EMISSION RESULTS IN GRAMS PER MILE
FUEL ECONOMY IN MILES PER GALLON

APPENDIX E

LISTING OF FEDERAL TEST PROCEDURE RESULTS ON INDIVIDUAL VEHICLES

ST. LOUIS

VEHICLE NUMBER	YEAR	MAKE	MODEL	CID	TEST TYPE	HC	CO	CO2	NOXC	FUEL ECONOMY
6236	1976	CHEV	IMPA	350	COLD TRANS	2.13	44.49	684.3	4.62	11.66
					COLD STAB	1.29	40.44	661.5	1.71	12.17
IDLE HC,PPM/HEXANE				7.	HOT TRANS	.86	23.60	589.9	3.35	14.09
IDLE CO,PCT (MEAS)				0.00						
IDLE CO,PCT (SPEC)				99.99	1975 FTP	1.35	36.68	646.7	2.76	12.53
OTHER TESTS: THE 5 SHORT CYCLE TESTS										
6237	1976	CHEV	MALI	305	COLD TRANS	2.68	66.49	607.0	2.87	12.33
					COLD STAB	.43	5.73	669.7	1.44	13.05
IDLE HC,PPM/HEXANE				5.	HOT TRANS	.58	5.24	571.3	2.78	15.26
IDLE CO,PCT (MEAS)				0.00						
IDLE CO,PCT (SPEC)				99.99	1975 FTP	.94	18.10	630.0	2.10	13.42
OTHER TESTS: THE 5 SHORT CYCLE TESTS										
6238	1976	CHEV	VEGA	140	COLD TRANS	2.85	71.75	431.6	2.87	16.04
					COLD STAB	.25	8.65	439.9	1.53	19.54
IDLE HC,PPM/HEXANE				6.	HOT TRANS	.41	9.20	399.3	2.85	21.38
IDLE CO,PCT (MEAS)				0.00						
IDLE CO,PCT (SPEC)				99.99	1975 FTP	.83	21.79	427.1	2.17	19.13
OTHER TESTS: THE 5 SHORT CYCLE TESTS										
6239	1976	CHEV	NOVA	250	COLD TRANS	1.98	10.82	544.4	4.58	15.64
					COLD STAB	.21	.01	512.4	2.87	17.30
IDLE HC,PPM/HEXANE				150.	HOT TRANS	.29	1.16	462.2	2.90	19.09
IDLE CO,PCT (MEAS)				0.00						
IDLE CO,PCT (SPEC)				99.99	1975 FTP	.60	2.55	505.3	3.23	17.36
OTHER TESTS: THE 5 SHORT CYCLE TESTS										
6240	1976	CHRY	CORD	318	COLD TRANS	3.07	47.78	626.9	9.59	12.47
					COLD STAB	2.10	23.61	603.5	7.96	13.71
IDLE HC,PPM/HEXANE				10.	HOT TRANS	1.68	9.72	562.4	10.53	15.22
IDLE CO,PCT (MEAS)				.01						
IDLE CO,PCT (SPEC)				.30	1975 FTP	2.19	24.80	597.1	9.00	13.80
OTHER TESTS: THE 5 SHORT CYCLE TESTS										

EMISSION RESULTS IN GRAMS PER MILE
FUEL ECONOMY IN MILES PER GALLON

APPENDIX E

LISTING OF FEDERAL TEST PROCEDURE RESULTS ON INDIVIDUAL VEHICLES

ST. LOUIS

VEHICLE NUMBER	YEAR	MAKE	MODEL	CID	TEST TYPE	HC	CO	CO2	NOXC	FUEL ECONOMY
6241	1976	CHRY	NEWY	400	COLD TRANS	2.67	37.44	848.4	4.64	9.69
					COLD STAB	2.17	51.65	855.9	2.66	9.40
IDLE HC.PPM/HEXANE				28.	HOT TRANS	1.47	22.45	803.6	3.80	10.52
IDLE CO.PCT (MEAS)				.60						
IDLE CO.PCT (SPEC)				.15	1975 FTP	2.08	40.76	840.1	3.38	9.75
OTHER TESTS: THE 5 SHORT CYCLE TESTS										
6242	1976	DODG	CHAR	360	COLD TRANS	2.91	76.50	635.6	3.54	11.60
					COLD STAB	3.19	120.17	651.0	1.45	10.44
IDLE HC.PPM/HEXANE				39.	HOT TRANS	2.77	69.44	562.9	3.37	13.04
IDLE CO.PCT (MEAS)				1.80						
IDLE CO.PCT (SPEC)				.30	1975 FTP	3.02	97.34	623.8	2.41	11.29
OTHER TESTS: THE 5 SHORT CYCLE TESTS										
6243	1976	DODG	MONA	400	COLD TRANS	2.44	31.27	764.8	2.85	10.80
					COLD STAB	1.37	5.23	796.6	1.68	10.97
IDLE HC.PPM/HEXANE				14.	HOT TRANS	1.42	5.24	728.6	2.55	11.97
IDLE CO.PCT (MEAS)				.04						
IDLE CO.PCT (SPEC)				.20	1975 FTP	1.60	10.59	771.5	2.16	11.19
OTHER TESTS: THE 5 SHORT CYCLE TESTS										
6244	1976	DODG	ASPE	225	COLD TRANS	1.65	17.29	527.3	4.50	15.86
					COLD STAB	.60	3.62	506.8	1.88	17.25
IDLE HC.PPM/HEXANE				16.	HOT TRANS	1.14	8.55	460.0	2.66	18.60
IDLE CO.PCT (MEAS)				.02						
IDLE CO.PCT (SPEC)				.30	1975 FTP	.97	7.78	498.3	2.63	17.28
OTHER TESTS: THE 5 SHORT CYCLE TESTS										
6245	1976	DODG	MONA	360	COLD TRANS	2.72	54.00	646.4	4.87	12.00
					COLD STAB	1.68	68.00	693.1	1.59	11.02
IDLE HC.PPM/HEXANE				50.	HOT TRANS	1.14	33.47	615.9	3.93	13.21
IDLE CO.PCT (MEAS)				1.40						
IDLE CO.PCT (SPEC)				.30	1975 FTP	1.74	55.70	662.5	2.90	11.75
OTHER TESTS: THE 5 SHORT CYCLE TESTS										

EMISSION RESULTS IN GRAMS PER MILE
FUEL ECONOMY IN MILES PER GALLON

APPENDIX E

LISTING OF FEDERAL TEST PROCEDURE RESULTS ON INDIVIDUAL VEHICLES

ST. LOUIS

VEHICLE NUMBER	YEAR	MAKE	MODEL	CID	TEST TYPE	HC	CO	CO2	NOXC	FUEL ECONOMY
6246	1976	DODG	STAW	225	COLD TRANS	1.81	23.82	547.5	3.20	15.03
					COLD STAB	.47	3.25	533.4	1.65	16.44
IDLE HC,PPM/HEXANE				35.	HOT TRANS	1.49	4.92	486.7	2.72	17.78
IDLE CO,PCT (MEAS)				.02						
IDLE CO,PCT (SPEC)				.30	1975 FTP	1.02	7.94	523.5	2.26	16.46
OTHER TESTS: THE 5 SHORT CYCLE TESTS										
6247	1976	DODG	ASPE	225	COLD TRANS	3.14	64.18	484.7	3.44	14.90
					COLD STAB	1.76	25.20	441.7	1.61	18.23
IDLE HC,PPM/HEXANE				104.	HOT TRANS	1.82	28.52	428.7	2.25	18.52
IDLE CO,PCT (MEAS)				.75						
IDLE CO,PCT (SPEC)				.30	1975 FTP	2.06	34.13	447.0	2.16	17.50
OTHER TESTS: THE 5 SHORT CYCLE TESTS										
6248	1976	FORD	STAW	400	COLD TRANS	1.54	23.62	830.1	2.57	10.18
					COLD STAB	.43	1.97	784.0	3.02	11.26
IDLE HC,PPM/HEXANE				4.	HOT TRANS	.68	11.96	711.9	3.42	12.11
IDLE CO,PCT (MEAS)				0.00						
IDLE CO,PCT (SPEC)				99.99	1975 FTP	.73	9.15	773.8	3.04	11.23
OTHER TESTS: THE 5 SHORT CYCLE TESTS										
6249	1976	FORD	ELIT	351	COLD TRANS	1.77	19.93	736.9	3.80	11.47
					COLD STAB	1.13	7.70	702.4	2.60	12.36
IDLE HC,PPM/HEXANE				65.	HOT TRANS	1.24	4.90	600.9	3.09	14.49
IDLE CO,PCT (MEAS)				.10						
IDLE CO,PCT (SPEC)				99.99	1975 FTP	1.29	9.45	681.8	2.98	12.67
OTHER TESTS: THE 5 SHORT CYCLE TESTS										
6250	1976	FORD	MAVE	200	COLD TRANS	2.65	13.06	500.0	1.09	16.78
					COLD STAB	.86	.13	460.7	.85	19.14
IDLE HC,PPM/HEXANE				25.	HOT TRANS	1.21	1.21	427.5	.98	20.49
IDLE CO,PCT (MEAS)				0.00						
IDLE CO,PCT (SPEC)				99.99	1975 FTP	1.32	3.09	459.7	.93	18.93
OTHER TESTS: THE 5 SHORT CYCLE TESTS										

EMISSION RESULTS IN GRAMS PER MILE
FUEL ECONOMY IN MILES PER GALLON

APPENDIX E

LISTING OF FEDERAL TEST PROCEDURE RESULTS ON INDIVIDUAL VEHICLES

ST. LOUIS

VEHICLE NUMBER	YEAR	MAKE	MODEL	CID	TEST TYPE	HC	CO	CO2	NOXC	FUEL ECONOMY
6251	1976	FORD	THUN	460	COLD TRANS	1.13	13.46	836.0	1.74	10.31
					COLD STAB	.40	.93	808.5	1.76	10.94
IDLE HC,PPM/HEXANE				10.	HOT TRANS	.70	6.53	711.7	2.32	12.26
IDLE CO,PCT (MEAS)				0.00						
IDLE CO,PCT (SPEC)				99.99	1975 FTP	.63	5.04	787.7	1.91	11.13
OTHER TESTS: THE 5 SHORT CYCLE TESTS										
6252	1976	FORD	MUST	140	COLD TRANS	1.55	7.35	423.9	3.18	20.16
					COLD STAB	.81	4.50	474.8	1.93	18.32
IDLE HC,PPM/HEXANE				5.	HOT TRANS	.92	5.30	377.4	3.13	22.84
IDLE CO,PCT (MEAS)				0.00						
IDLE CO,PCT (SPEC)				99.99	1975 FTP	.99	5.30	437.7	2.52	19.76
OTHER TESTS: THE 5 SHORT CYCLE TESTS										
6253	1976	FORD	MAVE	250	COLD TRANS	1.62	3.86	593.5	2.17	14.68
					COLD STAB	.42	.05	568.8	1.51	15.56
IDLE HC,PPM/HEXANE				8.	HOT TRANS	.63	.76	494.1	1.83	17.85
IDLE CO,PCT (MEAS)				0.00						
IDLE CO,PCT (SPEC)				99.99	1975 FTP	.72	1.03	553.5	1.73	15.92
OTHER TESTS: THE 5 SHORT CYCLE TESTS										
6254	1976	FORD	GRAN	302	COLD TRANS	2.58	11.78	610.9	3.25	13.92
					COLD STAB	1.24	.56	610.0	2.99	14.44
IDLE HC,PPM/HEXANE				27.	HOT TRANS	1.41	1.11	548.0	3.06	16.02
IDLE CO,PCT (MEAS)				0.00						
IDLE CO,PCT (SPEC)				99.99	1975 FTP	1.56	3.02	593.3	3.06	14.72
OTHER TESTS: THE 5 SHORT CYCLE TESTS										
6255	1976	FORD	PINT	140	COLD TRANS	2.45	11.27	413.8	4.13	20.20
					COLD STAB	.56	2.18	414.3	2.66	21.16
IDLE HC,PPM/HEXANE				10.	HOT TRANS	.97	2.99	334.0	3.58	25.97
IDLE CO,PCT (MEAS)				.01						
IDLE CO,PCT (SPEC)				99.99	1975 FTP	1.06	4.27	392.3	3.21	22.06
OTHER TESTS: THE 5 SHORT CYCLE TESTS										

EMISSION RESULTS IN GRAMS PER MILE
FUEL ECONOMY IN MILES PER GALLON

APPENDIX E

LISTING OF FEDERAL TEST PROCEDURE RESULTS ON INDIVIDUAL VEHICLES

ST. LOUIS

VEHICLE NUMBER	YEAR	MAKE	MODEL	CID	TEST TYPE	HC	CO	CO2	NOXC	FUEL ECONOMY
6256	1976	FORD	ELIT	351	COLD TRANS	2.04	26.74	716.1	4.22	11.61
					COLD STAB	1.34	10.85	703.9	3.26	12.24
IDLE HC,PPM/HEXANE				65.	HOT TRANS	1.26	6.60	580.7	3.69	14.91
IDLE CO,PCT (MEAS)				.05						
IDLE CO,PCT (SPEC)				99.99	1975 FTP	1.46	12.96	672.8	3.58	12.72
OTHER TESTS: THE 5 SHORT CYCLE TESTS										
6257	1976	FORD	STAW	140	COLD TRANS	.97	6.64	532.6	3.02	16.25
					COLD STAB	.33	.36	489.7	1.41	18.07
IDLE HC,PPM/HEXANE				6.	HOT TRANS	.37	1.10	443.1	2.74	19.90
IDLE CO,PCT (MEAS)				0.00						
IDLE CO,PCT (SPEC)				99.99	1975 FTP	.47	1.85	485.8	2.11	18.11
OTHER TESTS: THE 5 SHORT CYCLE TESTS										
6258	1976	FORD	GRAN	250	COLD TRANS	2.07	17.97	648.5	2.10	12.99
					COLD STAB	.75	.18	607.6	1.34	14.54
IDLE HC,PPM/HEXANE				2.	HOT TRANS	1.03	2.14	603.1	2.10	14.56
IDLE CO,PCT (MEAS)				0.00						
IDLE CO,PCT (SPEC)				99.99	1975 FTP	1.10	4.38	614.8	1.70	14.20
OTHER TESTS: THE 5 SHORT CYCLE TESTS										
6259	1976	FORD	PINT	140	COLD TRANS	2.98	11.93	429.6	2.08	19.39
					COLD STAB	.59	1.91	420.1	1.22	20.88
IDLE HC,PPM/HEXANE				10.	HOT TRANS	1.24	3.84	352.3	1.99	24.50
IDLE CO,PCT (MEAS)				0.00						
IDLE CO,PCT (SPEC)				99.99	1975 FTP	1.26	4.50	403.5	1.61	21.41
OTHER TESTS: THE 5 SHORT CYCLE TESTS										
6260	1976	FORD	STAW	400	COLD TRANS	2.55	46.11	757.0	1.07	10.60
					COLD STAB	1.06	44.67	822.6	1.15	9.90
IDLE HC,PPM/HEXANE				136.	HOT TRANS	.95	29.53	721.6	1.62	11.51
IDLE CO,PCT (MEAS)				2.10						
IDLE CO,PCT (SPEC)				99.99	1975 FTP	1.34	40.83	781.6	1.26	10.44
OTHER TESTS: THE 5 SHORT CYCLE TESTS										

EMISSION RESULTS IN GRAMS PER MILE
FUEL ECONOMY IN MILES PER GALLON

APPENDIX E

LISTING OF FEDERAL TEST PROCEDURE RESULTS ON INDIVIDUAL VEHICLES

ST. LOUIS

VEHICLE NUMBER	YEAR	MAKE	MODEL	CID	TEST TYPE	HC	CO	CO2	NOXC	FUEL ECONOMY
6261	1976	FORD	LTD	351	COLD TRANS	5.34	110.62	624.3	4.54	10.89
					COLD STAB	2.41	73.51	676.8	3.76	11.10
IDLE HC.PPM/HEXANE				15.	HOT TRANS	1.55	43.10	614.9	6.25	12.91
IDLE CO.PCT (MEAS)				.39						
IDLE CO.PCT (SPEC)				99.99	1975 FTP	2.78	72.85	649.1	4.60	11.49
OTHER TESTS: THE 5 SHORT CYCLE TESTS										
6262	1976	FORD	THUN	460	COLD TRANS	1.11	17.07	829.5	9.69	10.32
					COLD STAB	.74	31.09	847.8	6.16	9.87
IDLE HC.PPM/HEXANE				20.	HOT TRANS	.89	11.31	715.2	10.31	12.06
IDLE CO.PCT (MEAS)				.90						
IDLE CO.PCT (SPEC)				99.99	1975 FTP	.85	22.80	807.9	8.02	10.49
OTHER TESTS: THE 5 SHORT CYCLE TESTS										
6263	1976	FORD	MUST	171	COLD TRANS	1.68	19.90	505.7	3.57	16.37
					COLD STAB	.58	6.47	527.8	1.44	16.44
IDLE HC.PPM/HEXANE				12.	HOT TRANS	.87	5.61	444.7	2.11	19.45
IDLE CO.PCT (MEAS)				0.00						
IDLE CO.PCT (SPEC)				99.99	1975 FTP	.88	9.00	500.6	2.06	17.15
OTHER TESTS: THE 5 SHORT CYCLE TESTS										
6264	1976	FORD	ELIT	400	COLD TRANS	3.10	25.85	740.2	2.69	11.23
					COLD STAB	1.45	23.23	741.4	2.46	11.34
IDLE HC.PPM/HEXANE				130.	HOT TRANS	1.49	12.79	646.9	3.35	13.21
IDLE CO.PCT (MEAS)				2.50						
IDLE CO.PCT (SPEC)				99.99	1975 FTP	1.80	20.92	715.4	2.75	11.77
OTHER TESTS: THE 5 SHORT CYCLE TESTS										
6265	1976	FORD	ELIT	351	COLD TRANS	2.05	22.18	715.8	4.61	11.72
					COLD STAB	1.45	9.29	725.8	3.88	11.91
IDLE HC.PPM/HEXANE				24.	HOT TRANS	1.64	6.36	639.7	4.78	13.55
IDLE CO.PCT (MEAS)				.03						
IDLE CO.PCT (SPEC)				99.99	1975 FTP	1.62	11.14	700.3	4.28	12.28
OTHER TESTS: THE 5 SHORT CYCLE TESTS										

EMISSION RESULTS IN GRAMS PER MILE
FUEL ECONOMY IN MILES PER GALLON

APPENDIX E

LISTING OF FEDERAL TEST PROCEDURE RESULTS ON INDIVIDUAL VEHICLES

ST. LOUIS

VEHICLE NUMBER	YEAR	MAKE	MODEL	CID	TEST TYPE	HC	CO	CO2	NOXC	FUEL ECONOMY
6266	1976	FORD	GRAN	302	COLD TRANS	5.22	64.04	608.4	1.89	12.23
					COLD STAB	1.14	.78	655.8	1.70	13.43
IDLE HC,PPM/HEXANE				32.	HOT TRANS	1.88	2.18	564.4	2.42	15.47
IDLE CO,PCT (MEAS)				0.00						
IDLE CO,PCT (SPEC)				99.99	1975 FTP	2.18	14.18	621.1	1.94	13.65
OTHER TESTS: THE 5 SHORT CYCLE TESTS										
6267	1976	FORD	PINT	140	COLD TRANS	1.63	10.86	503.7	3.14	16.87
					COLD STAB	.41	.28	460.6	1.30	19.20
IDLE HC,PPM/HEXANE				3.	HOT TRANS	.49	1.04	419.7	2.67	20.99
IDLE CO,PCT (MEAS)				0.00						
IDLE CO,PCT (SPEC)				99.99	1975 FTP	.69	2.66	458.3	2.05	19.10
OTHER TESTS: THE 5 SHORT CYCLE TESTS										
6268	1976	LINC	MRK4	460	COLD TRANS	1.32	36.02	939.6	.61	8.87
					COLD STAB	.36	6.10	956.0	.82	9.18
IDLE HC,PPM/HEXANE				8.	HOT TRANS	.56	19.25	839.1	.63	10.19
IDLE CO,PCT (MEAS)				0.00						
IDLE CO,PCT (SPEC)				99.99	1975 FTP	.61	15.85	920.7	.72	9.37
OTHER TESTS: THE 5 SHORT CYCLE TESTS										
6270	1976	MERC	MONG	351	COLD TRANS	2.43	38.75	765.2	4.01	10.64
					COLD STAB	1.30	29.28	731.8	2.51	11.35
IDLE HC,PPM/HEXANE				23.	HOT TRANS	2.17	17.98	627.4	3.43	13.40
IDLE CO,PCT (MEAS)				.47						
IDLE CO,PCT (SPEC)				99.99	1975 FTP	1.77	28.14	710.2	3.07	11.68
OTHER TESTS: THE 5 SHORT CYCLE TESTS										
6271	1976	MERC	MARQ	400	COLD TRANS	4.35	82.71	660.8	1.50	11.03
					COLD STAB	1.28	23.81	708.5	1.45	11.83
IDLE HC,PPM/HEXANE				26.	HOT TRANS	2.21	49.89	596.5	1.82	13.01
IDLE CO,PCT (MEAS)				.08						
IDLE CO,PCT (SPEC)				99.99	1975 FTP	2.17	43.05	668.1	1.56	11.95
OTHER TESTS: THE 5 SHORT CYCLE TESTS										

EMISSION RESULTS IN GRAMS PER MILE
FUEL ECONOMY IN MILES PER GALLON

APPENDIX F

LISTING OF FEDERAL TEST PROCEDURE RESULTS ON INDIVIDUAL VEHICLES

ST. LOUIS

VEHICLE NUMBER	YEAR	MAKE	MODEL	CID	TEST TYPE	HC	CO	CO2	NOXC	FUEL ECONOMY
6272	1976	MERC	COUG	351	COLD TRANS	2.05	32.03	739.1	1.69	11.15
					COLD STAB	.60	2.82	739.1	1.53	11.91
IDLE HC,PPM/HEXANE				126.	HOT TRANS	.64	10.32	616.7	2.06	13.98
IDLE CO,PCT (MEAS)				2.40						
IDLE CO,PCT (SPEC)				99.99	1975 FTP	.91	10.88	705.7	1.71	12.23
OTHER TESTS: THE 5 SHORT CYCLE TESTS										
6273	1976	MERC	STAW	400	COLD TRANS	2.23	21.77	789.5	1.53	10.68
					COLD STAB	1.07	1.07	746.0	1.65	11.82
IDLE HC,PPM/HEXANE				6.	HOT TRANS	1.61	9.17	651.5	2.03	13.23
IDLE CO,PCT (MEAS)				0.00						
IDLE CO,PCT (SPEC)				99.99	1975 FTP	1.45	7.54	729.2	1.73	11.90
OTHER TESTS: THE 5 SHORT CYCLE TESTS										
6274	1976	MERC	MONA	302	COLD TRANS	1.88	22.48	650.9	1.53	12.82
					COLD STAB	.71	1.16	681.9	.68	12.94
IDLE HC,PPM/HEXANE				16.	HOT TRANS	1.03	4.32	570.7	1.28	15.28
IDLE CO,PCT (MEAS)				.01						
IDLE CO,PCT (SPEC)				99.99	1975 FTP	1.04	6.41	645.2	1.02	13.48
OTHER TESTS: THE 5 SHORT CYCLE TESTS										
6275	1976	OLDS	CUTL	350	COLD TRANS	3.53	17.82	595.8	9.80	13.98
					COLD STAB	3.42	21.58	568.2	7.23	14.48
IDLE HC,PPM/HEXANE				62.	HOT TRANS	2.99	12.91	537.6	10.12	15.64
IDLE CO,PCT (MEAS)				.34						
IDLE CO,PCT (SPEC)				99.99	1975 FTP	3.33	18.44	565.5	8.55	14.67
OTHER TESTS: THE 5 SHORT CYCLE TESTS										
6276	1976	OLDS	CUTL	350	COLD TRANS	1.98	11.73	608.6	2.45	14.02
					COLD STAB	.46	.32	580.5	1.77	15.24
IDLE HC,PPM/HEXANE				13.	HOT TRANS	.64	1.64	516.7	2.48	17.02
IDLE CO,PCT (MEAS)				0.00						
IDLE CO,PCT (SPEC)				99.99	1975 FTP	.82	3.03	568.9	2.10	15.40
OTHER TESTS: THE 5 SHORT CYCLE TESTS										

EMISSION RESULTS IN GRAMS PER MILE
FUEL ECONOMY IN MILES PER GALLON

APPENDIX E

LISTING OF FEDERAL TEST PROCEDURE RESULTS ON INDIVIDUAL VEHICLES

ST. LOUIS

VEHICLE NUMBER	YEAR	MAKE	MODEL	CID	TEST TYPE	HC	CO	CO2	NOXC	FUEL ECONOMY
6277	1976	OLDS	OMEG	250	COLD TRANS	4.38	45.14	563.6	4.77	13.69
					COLD STAB	2.02	46.43	462.0	2.72	16.39
IDLE HC,PPM/HEXANE				8.	HOT TRANS	1.34	19.10	460.1	3.22	17.95
IDLE CO,PCT (MEAS)				.18						
IDLE CO,PCT (SPEC)				99.99	1975 FTP	2.32	38.71	482.4	3.28	16.12
OTHER TESTS: THE 5 SHORT CYCLE TESTS										
6279	1976	OLDS	STAW	455	COLD TRANS	1.62	14.33	792.6	2.62	10.82
					COLD STAB	1.33	16.52	760.6	1.56	11.22
IDLE HC,PPM/HEXANE				26.	HOT TRANS	1.21	17.80	723.1	2.40	11.76
IDLE CO,PCT (MEAS)				.16						
IDLE CO,PCT (SPEC)				99.99	1975 FTP	1.36	16.42	757.0	2.01	11.28
OTHER TESTS: THE 5 SHORT CYCLE TESTS										
6280	1976	OLDS	CUTL	350	COLD TRANS	3.16	31.76	646.6	2.40	12.56
					COLD STAB	1.88	35.93	583.5	1.06	13.74
IDLE HC,PPM/HEXANE				30.	HOT TRANS	1.27	16.26	563.8	2.11	14.96
IDLE CO,PCT (MEAS)				.47						
IDLE CO,PCT (SPEC)				99.99	1975 FTP	1.98	29.71	591.1	1.62	13.78
OTHER TESTS: THE 5 SHORT CYCLE TESTS										
6281	1976	OLDS	CUTL	350	COLD TRANS	3.66	43.13	576.6	2.30	13.53
					COLD STAB	2.65	51.12	541.2	1.25	14.09
IDLE HC,PPM/HEXANE				95.	HOT TRANS	1.76	22.50	515.1	2.46	15.96
IDLE CO,PCT (MEAS)				1.40						
IDLE CO,PCT (SPEC)				99.99	1975 FTP	2.61	41.67	541.4	1.80	14.43
OTHER TESTS: THE 5 SHORT CYCLE TESTS										
6282	1976	OLDS	CUTL	350	COLD TRANS	2.84	36.65	623.4	2.21	12.86
					COLD STAB	1.47	27.31	623.1	1.26	13.23
IDLE HC,PPM/HEXANE				30.	HOT TRANS	1.17	15.75	575.0	2.23	14.71
IDLE CO,PCT (MEAS)				.22						
IDLE CO,PCT (SPEC)				99.99	1975 FTP	1.67	26.08	610.0	1.72	13.52
OTHER TESTS: THE 5 SHORT CYCLE TESTS										

EMISSION RESULTS IN GRAMS PER MILE
FUEL ECONOMY IN MILES PER GALLON

APPENDIX E

LISTING OF FEDERAL TEST PROCEDURE RESULTS ON INDIVIDUAL VEHICLES

ST. LOUIS

VEHICLE NUMBER	YEAR	MAKE	MODEL	CID	TEST TYPE	HC	CO	CO2	NOXC	FUEL ECONOMY
6283	1976	OLDS	NINE	455	COLD TRANS	1.73	16.22	760.4	2.55	11.22
					COLD STAB	.27	.40	722.4	1.78	12.26
IDLE HC,PPM/HEXANE			15.		HOT TRANS	.52	3.93	664.9	2.66	13.19
IDLE CO,PCT (MEAS)			0.00							
IDLE CO,PCT (SPEC)			99.99		1975 FTP	.64	4.62	714.5	2.18	12.26
OTHER TESTS: THE 5 SHORT CYCLE TESTS										
6284	1976	PLYM	VOLA	318	COLD TRANS	3.32	39.14	642.9	2.01	12.41
					COLD STAB	3.91	60.19	565.1	1.32	13.20
IDLE HC,PPM/HEXANE			175.		HOT TRANS	2.46	25.37	549.1	2.23	14.87
IDLE CO,PCT (MEAS)			1.70							
IDLE CO,PCT (SPEC)			.30		1975 FTP	3.39	46.36	576.8	1.71	13.44
OTHER TESTS: THE 5 SHORT CYCLE TESTS										
6285	1976	PLYM	STAW	318	COLD TRANS	2.63	24.13	624.7	3.38	13.23
					COLD STAB	1.71	14.80	620.0	1.98	13.68
IDLE HC,PPM/HEXANE			32.		HOT TRANS	1.39	7.28	582.7	3.17	14.83
IDLE CO,PCT (MEAS)			.10							
IDLE CO,PCT (SPEC)			.30		1975 FTP	1.81	14.67	610.8	2.59	13.88
OTHER TESTS: THE 5 SHORT CYCLE TESTS										
6286	1976	PLYM	FURY	318	COLD TRANS	2.32	28.01	681.3	3.05	12.11
					COLD STAB	.84	4.27	652.8	1.86	13.40
IDLE HC,PPM/HEXANE			28.		HOT TRANS	1.39	5.89	613.4	2.94	14.15
IDLE CO,PCT (MEAS)			.02							
IDLE CO,PCT (SPEC)			.30		1975 FTP	1.30	9.60	647.9	2.40	13.30
OTHER TESTS: THE 5 SHORT CYCLE TESTS										
6287	1976	PLYM	VOLA	225	COLD TRANS	4.00	37.98	497.4	6.17	15.58
					COLD STAB	3.79	54.76	432.1	2.91	16.74
IDLE HC,PPM/HEXANE			45.		HOT TRANS	2.87	27.72	449.4	4.52	17.68
IDLE CO,PCT (MEAS)			.65							
IDLE CO,PCT (SPEC)			.30		1975 FTP	3.58	43.93	450.3	4.02	16.72
OTHER TESTS: THE 5 SHORT CYCLE TESTS										

EMISSION RESULTS IN GRAMS PER MILE
FUEL ECONOMY IN MILES PER GALLON

APPENDIX E

LISTING OF FEDERAL TEST PROCEDURE RESULTS ON INDIVIDUAL VEHICLES

ST. LOUIS

VEHICLE NUMBER	YEAR	MAKE	MODEL	CID	TEST TYPE	HC	CO	CO2	NOXC	FUEL ECONOMY
6288	1976	PLYM	STAW	400	COLD TRANS	3.69	68.81	779.4	3.10	9.87
					COLD STAB	2.22	62.75	808.2	1.92	9.71
IDLE HC,PPM/HEXANE				40.	HOT TRANS	1.72	33.27	685.1	3.40	11.95
IDLE CO,PCT (MEAS)				.08						
IDLE CO,PCT (SPEC)				.30	1975 FTP	2.39	55.95	768.7	2.57	10.27
OTHER TESTS: THE 5 SHORT CYCLE TESTS										
6289	1976	PLYM	STAW	225	COLD TRANS	2.09	30.58	555.4	4.85	14.55
					COLD STAB	1.32	17.91	510.7	2.13	16.34
IDLE HC,PPM/HEXANE				80.	HOT TRANS	1.37	18.12	495.6	3.35	16.80
IDLE CO,PCT (MEAS)				.48						
IDLE CO,PCT (SPEC)				.30	1975 FTP	1.49	20.58	515.8	3.02	16.05
OTHER TESTS: THE 5 SHORT CYCLE TESTS										
6290	1976	PLYM	STAW	225	COLD TRANS	4.69	75.81	497.9	3.46	14.05
					COLD STAB	2.62	47.52	451.7	1.88	16.60
IDLE HC,PPM/HEXANE				95.	HOT TRANS	2.59	38.48	441.2	2.47	17.41
IDLE CO,PCT (MEAS)				1.40						
IDLE CO,PCT (SPEC)				.30	1975 FTP	3.04	50.88	458.4	2.36	16.20
OTHER TESTS: THE 5 SHORT CYCLE TESTS										
6291	1976	PONT	SUNB	231	COLD TRANS	3.25	51.77	426.6	3.81	17.12
					COLD STAB	2.77	88.16	411.2	1.11	15.89
IDLE HC,PPM/HEXANE				32.	HOT TRANS	1.78	37.30	419.3	2.88	18.36
IDLE CO,PCT (MEAS)				.90						
IDLE CO,PCT (SPEC)				99.99	1975 FTP	2.60	66.79	416.6	2.15	16.75
OTHER TESTS: THE 5 SHORT CYCLE TESTS										
6292	1976	PONT	BONN	400	COLD TRANS	1.72	5.66	686.2	5.21	12.67
					COLD STAB	.72	.31	651.2	4.32	13.57
IDLE HC,PPM/HEXANE				6.	HOT TRANS	.79	2.05	601.2	5.34	14.62
IDLE CO,PCT (MEAS)				0.00						
IDLE CO,PCT (SPEC)				99.99	1975 FTP	.95	1.89	644.7	4.78	13.64
OTHER TESTS: THE 5 SHORT CYCLE TESTS										

EMISSION RESULTS IN GRAMS PER MILE
FUEL ECONOMY IN MILES PER GALLON

APPENDIX E

LISTING OF FEDERAL TEST PROCEDURE RESULTS ON INDIVIDUAL VEHICLES

ST. LOUIS

VEHICLE NUMBER	YEAR	MAKE	MODEL	CID	TEST TYPE	HC	CO	CO2	NOXC	FUEL ECONOMY
6293	1976	PONT	GRNP	350	COLD TRANS	1.94	39.19	666.5	3.29	12.09
					COLD STAB	.39	8.64	639.5	2.28	13.56
IDLE HC.PPM/HEXANE			9.		HOT TRANS	1.89	21.89	552.2	3.07	14.98
IDLE CO.PCT (MEAS)			0.00							
IDLE CO.PCT (SPEC)			99.99		1975 FTP	1.12	18.54	621.2	2.70	13.57
OTHER TESTS: THE 5 SHORT CYCLE TESTS										
6294	1976	PONT	LEMA	260	COLD TRANS	1.75	16.87	591.6	6.19	14.23
					COLD STAB	.23	.55	578.2	3.83	15.31
IDLE HC.PPM/HEXANE			6.		HOT TRANS	.39	2.05	528.5	6.00	16.65
IDLE CO.PCT (MEAS)			0.00							
IDLE CO.PCT (SPEC)			99.99		1975 FTP	.59	4.32	567.4	4.91	15.41
OTHER TESTS: THE 5 SHORT CYCLE TESTS										
6295	1976	PONT	CATA	455	COLD TRANS	7.25	66.16	744.8	2.06	10.18
					COLD STAB	5.89	85.19	650.9	1.09	11.05
IDLE HC.PPM/HEXANE			125.		HOT TRANS	3.92	38.58	643.5	2.19	12.39
IDLE CO.PCT (MEAS)			1.20							
IDLE CO.PCT (SPEC)			99.99		1975 FTP	5.63	68.56	668.2	1.59	11.18
OTHER TESTS: THE 5 SHORT CYCLE TESTS										
6296	1976	PONT	FIRE	350	COLD TRANS	3.84	68.14	586.3	3.86	12.58
					COLD STAB	2.30	40.79	562.7	1.78	14.00
IDLE HC.PPM/HEXANE			30.		HOT TRANS	1.76	30.81	526.3	3.57	15.30
IDLE CO.PCT (MEAS)			.24							
IDLE CO.PCT (SPEC)			99.99		1975 FTP	2.47	43.69	557.6	2.69	14.00
OTHER TESTS: THE 5 SHORT CYCLE TESTS										
6297	1976	PONT	GRNP	350	COLD TRANS	2.26	46.82	663.2	3.99	11.93
					COLD STAB	.34	4.20	668.1	3.32	13.13
IDLE HC.PPM/HEXANE			6.		HOT TRANS	.74	12.95	594.8	4.44	14.37
IDLE CO.PCT (MEAS)			0.00							
IDLE CO.PCT (SPEC)			99.99		1975 FTP	.84	15.36	647.1	3.77	13.17
OTHER TESTS: THE 5 SHORT CYCLE TESTS										

EMISSION RESULTS IN GRAMS PER MILE
FUEL ECONOMY IN MILES PER GALLON

APPENDIX E

LISTING OF FEDERAL TEST PROCEDURE RESULTS ON INDIVIDUAL VEHICLES

ST. LOUIS

VEHICLE NUMBER	YEAR	MAKE	MODEL	CID	TEST TYPE	HC	CO	CO2	NOXC	FUEL ECONOMY
6298	1976	PONT	VENT	250	COLD TRANS	2.40	23.89	531.9	3.95	15.38
					COLD STAB	1.27	18.61	474.2	3.09	17.49
IDLE HC,PPM/HEXANE				80.	HOT TRANS	1.06	8.29	452.1	3.45	18.95
IDLE CO,PCT (MEAS)				.70						
IDLE CO,PCT (SPEC)				99.99	1975 FTP	1.45	16.88	480.0	3.36	17.36
OTHER TESTS: THE 5 SHORT CYCLE TESTS										
6299	1976	CAPR	COUP	171	COLD TRANS	2.33	31.24	473.4	2.58	16.75
					COLD STAB	1.21	14.65	593.3	1.28	14.31
IDLE HC,PPM/HEXANE				18.	HOT TRANS	1.34	14.21	439.1	2.14	19.06
IDLE CO,PCT (MEAS)				.63						
IDLE CO,PCT (SPEC)				99.99	1975 FTP	1.48	17.95	526.5	1.78	15.87
OTHER TESTS: THE 5 SHORT CYCLE TESTS										
6300	1976	DODG	COLT	98	COLD TRANS	1.86	24.85	395.2	3.27	20.16
					COLD STAB	1.05	17.63	430.3	1.83	19.24
IDLE HC,PPM/HEXANE				0.	HOT TRANS	1.42	15.04	335.7	2.74	24.39
IDLE CO,PCT (MEAS)				.03						
IDLE CO,PCT (SPEC)				1.70	1975 FTP	1.32	18.41	397.3	2.38	20.62
OTHER TESTS: THE 5 SHORT CYCLE TESTS										
6301	1976	DATS	B210	85	COLD TRANS	1.75	21.72	354.1	3.53	22.54
					COLD STAB	1.24	10.79	365.8	1.45	22.95
IDLE HC,PPM/HEXANE				7.	HOT TRANS	1.65	13.40	304.2	2.92	26.86
IDLE CO,PCT (MEAS)				.03						
IDLE CO,PCT (SPEC)				2.00	1975 FTP	1.46	13.75	346.6	2.28	23.81
OTHER TESTS: THE 5 SHORT CYCLE TESTS										
6302	1976	DATS	STAW	119	COLD TRANS	1.78	21.75	382.6	3.28	21.01
					COLD STAB	1.72	17.60	398.7	1.81	20.56
IDLE HC,PPM/HEXANE				28.	HOT TRANS	1.69	16.33	341.8	3.12	23.81
IDLE CO,PCT (MEAS)				.46						
IDLE CO,PCT (SPEC)				2.00	1975 FTP	1.72	18.11	379.8	2.47	21.45
OTHER TESTS: THE 5 SHORT CYCLE TESTS										

EMISSION RESULTS IN GRAMS PER MILE
FUEL ECONOMY IN MILES PER GALLON

APPENDIX E

LISTING OF FEDERAL TEST PROCEDURE RESULTS ON INDIVIDUAL VEHICLES

ST. LOUIS

VEHICLE NUMBER	YEAR	MAKE	MODEL	CID	TEST TYPE	HC	CO	CO2	NOXC	FUEL ECONOMY
6303	1976	DATS	B210	85	COLD TRANS	2.23	23.17	354.7	4.99	22.29
					COLD STAB	2.22	10.06	350.3	2.52	23.79
IDLE HC,PPM/HEXANE				50.	HOT TRANS	2.10	12.69	296.2	4.71	27.49
IDLE CO,PCT (MEAS)				.60						
IDLE CO,PCT (SPEC)				2.00	1975 FTP	2.19	13.48	336.4	3.63	24.34
OTHER TESTS: THE 5 SHORT CYCLE TESTS										
6304	1976	FIAT	128	79	COLD TRANS	2.22	22.88	364.1	1.44	21.80
					COLD STAB	.87	10.68	422.2	.85	20.09
IDLE HC,PPM/HEXANE				58.	HOT TRANS	1.01	13.38	311.0	1.37	26.47
IDLE CO,PCT (MEAS)				.37						
IDLE CO,PCT (SPEC)				1.00	1975 FTP	1.19	13.93	379.9	1.12	21.88
OTHER TESTS: THE 5 SHORT CYCLE TESTS										
6305	1976	FIAT	131	107	COLD TRANS	1.38	25.50	528.4	1.64	15.49
					COLD STAB	1.56	14.14	545.2	.58	15.51
IDLE HC,PPM/HEXANE				15.	HOT TRANS	.99	14.59	447.6	1.12	18.74
IDLE CO,PCT (MEAS)				.16						
IDLE CO,PCT (SPEC)				.50	1975 FTP	1.37	16.60	515.1	.94	16.27
OTHER TESTS: THE 5 SHORT CYCLE TESTS										
6306	1976	HOND	CIVI	76	COLD TRANS	1.64	28.17	380.1	3.93	20.66
					COLD STAB	.69	14.35	401.7	1.62	20.81
IDLE HC,PPM/HEXANE				24.	HOT TRANS	.97	11.57	299.8	3.58	27.64
IDLE CO,PCT (MEAS)				.38						
IDLE CO,PCT (SPEC)				1.50	1975 FTP	.96	16.44	369.4	2.63	22.28
OTHER TESTS: THE 5 SHORT CYCLE TESTS										
6307	1976	HOND	ACCO	98	COLD TRANS	1.23	9.45	357.2	3.95	23.61
					COLD STAB	.31	4.60	373.6	2.16	23.24
IDLE HC,PPM/HEXANE				12.	HOT TRANS	.41	3.78	323.4	3.44	26.84
IDLE CO,PCT (MEAS)				.40						
IDLE CO,PCT (SPEC)				.01	1975 FTP	.53	5.37	356.6	2.88	24.21
OTHER TESTS: THE 5 SHORT CYCLE TESTS										

EMISSION RESULTS IN GRAMS PER MILE
FUEL ECONOMY IN MILES PER GALLON

APPENDIX E

LISTING OF FEDERAL TEST PROCEDURE RESULTS ON INDIVIDUAL VEHICLES

ST. LOUIS

VEHICLE NUMBER	YEAR	MAKE	MODEL	CID	TEST TYPE	HC	CO	CO2	NOXC	FUEL ECONOMY
6308	1976	MAZD	RX4	80	COLD TRANS	2.30	13.40	525.8	1.99	16.02
					COLD STAB	.31	2.36	589.3	.99	14.94
IDLE HC,PPM/HEXANE			7.		HOT TRANS	2.20	6.82	464.1	1.82	18.42
IDLE CO,PCT (MEAS)			.01							
IDLE CO,PCT (SPEC)			.10		1975 FTP	1.24	5.85	542.0	1.42	15.99
OTHER TESTS: THE 5 SHORT CYCLE TESTS										
6309	1976	TOYO	CORO	97	COLD TRANS	2.36	20.44	372.2	4.63	21.55
					COLD STAB	1.16	18.51	422.9	1.89	19.48
IDLE HC,PPM/HEXANE			27.		HOT TRANS	1.66	14.59	343.9	4.15	23.85
IDLE CO,PCT (MEAS)			.25							
IDLE CO,PCT (SPEC)			99.99		1975 FTP	1.54	17.84	390.9	3.07	20.94
OTHER TESTS: THE 5 SHORT CYCLE TESTS										
6310	1976	TOYO	CORO	97	COLD TRANS	1.60	16.55	400.8	5.52	20.55
					COLD STAB	.76	11.64	375.6	2.32	22.39
IDLE HC,PPM/HEXANE			10.		HOT TRANS	.94	9.45	346.4	4.16	24.37
IDLE CO,PCT (MEAS)			.18							
IDLE CO,PCT (SPEC)			99.99		1975 FTP	.98	12.05	372.8	3.48	22.48
OTHER TESTS: THE 5 SHORT CYCLE TESTS										
6311	1976	TOYO	CELI	133	COLD TRANS	1.24	12.22	517.8	2.28	16.41
					COLD STAB	.10	1.49	552.8	.81	15.98
IDLE HC,PPM/HEXANE			2.		HOT TRANS	.32	2.71	450.0	2.28	19.50
IDLE CO,PCT (MEAS)			0.00							
IDLE CO,PCT (SPEC)			99.99		1975 FTP	.39	4.03	517.5	1.51	16.90
OTHER TESTS: THE 5 SHORT CYCLE TESTS										
6312	1976	TOYO	CORO	97	COLD TRANS	1.52	17.56	488.3	6.49	17.05
					COLD STAB	1.59	16.42	356.8	3.28	22.90
IDLE HC,PPM/HEXANE			24.		HOT TRANS	1.30	11.80	346.1	4.57	24.07
IDLE CO,PCT (MEAS)			.40							
IDLE CO,PCT (SPEC)			99.99		1975 FTP	1.50	15.39	380.9	4.29	21.65
OTHER TESTS: THE 5 SHORT CYCLE TESTS										

EMISSION RESULTS IN GRAMS PER MILE
FUEL ECONOMY IN MILES PER GALLON

APPENDIX E

LISTING OF FEDERAL TEST PROCEDURE RESULTS ON INDIVIDUAL VEHICLES

ST. LOUIS

VEHICLE NUMBER	YEAR	MAKE	MODEL	CID	TEST TYPE	HC	CO	CO2	NOXC	FUEL ECONOMY
6313	1976	VOLK	RABB	97	COLD TRANS	1.30	27.33	378.3	2.66	20.86
					COLD STAB	.78	10.60	400.1	1.63	21.17
IDLE HC,PPM/HEXANE				16.	HOT TRANS	.93	11.29	329.7	2.59	25.33
IDLE CO,PCT (MEAS)				.11						
IDLE CO,PCT (SPEC)				1.50	1975 FTP	.93	14.23	376.4	2.11	22.10
OTHER TESTS: THE 5 SHORT CYCLE TESTS										
6314	1976	VOLK	RABB	97	COLD TRANS	.63	11.94	399.6	2.04	21.11
					COLD STAB	.12	1.16	379.8	2.03	23.24
IDLE HC,PPM/HEXANE				7.	HOT TRANS	.24	3.17	343.5	2.42	25.42
IDLE CO,PCT (MEAS)				0.00						
IDLE CO,PCT (SPEC)				1.00	1975 FTP	.26	3.93	374.0	2.14	23.30
OTHER TESTS: THE 5 SHORT CYCLE TESTS										
6315	1976	VOLK	RABB	97	COLD TRANS	.24	1.22	441.6	2.54	19.98
					COLD STAB	.14	.09	436.3	1.26	20.32
IDLE HC,PPM/HEXANE				5.	HOT TRANS	.23	.45	381.0	2.18	23.21
IDLE CO,PCT (MEAS)				0.00						
IDLE CO,PCT (SPEC)				1.50	1975 FTP	.18	.42	422.3	1.77	20.96
OTHER TESTS: THE 5 SHORT CYCLE TESTS										
6316	1976	VOLV	264G	163	COLD TRANS	2.70	28.64	560.0	3.79	14.47
					COLD STAB	1.39	12.61	567.4	1.95	15.00
IDLE HC,PPM/HEXANE				25.	HOT TRANS	1.48	12.75	470.4	3.11	17.92
IDLE CO,PCT (MEAS)				.22						
IDLE CO,PCT (SPEC)				1.70	1975 FTP	1.68	15.95	539.4	2.65	15.58
OTHER TESTS: THE 5 SHORT CYCLE TESTS										
5052	1975	AMC	GREM	258	COLD TRANS	1.51	34.79	549.1	2.52	14.58
					COLD STAB	1.41	28.90	548.8	2.18	14.83
IDLE HC,PPM/HEXANE				20.	HOT TRANS	1.05	16.89	515.0	2.40	16.29
IDLE CO,PCT (MEAS)				.32						
IDLE CO,PCT (SPEC)				1.00	1975 FTP	1.33	26.84	539.6	2.31	15.15
OTHER TESTS: MODAL. THE 5 SHORT CYCLE TESTS										

EMISSION RESULTS IN GRAMS PER MILE
FUEL ECONOMY IN MILES PER GALLON

APPENDIX E

LISTING OF FEDERAL TEST PROCEDURE RESULTS ON INDIVIDUAL VEHICLES

ST. LOUIS

VEHICLE NUMBER	YEAR	MAKE	MODEL	CID	TEST TYPE	HC	CO	CO2	NOXC	FUEL ECONOMY
5053	1975	BUIC	STAW	350	COLD TRANS	2.20	40.10	747.0	3.12	10.86
					COLD STAB	.27	4.74	726.4	1.38	12.08
IDLE HC,PPM/HEXANE				8.	HOT TRANS	1.21	4.43	639.1	2.64	13.66
IDLE CO,PCT (MEAS)				0.00						
IDLE CO,PCT (SPEC)				99.99	1975 FTP	.93	11.93	706.8	2.08	12.18
OTHER TESTS: MODAL, THE 5 SHORT CYCLE TESTS										
5054	1975	BUIC	ELEC	455	COLD TRANS	2.29	42.30	809.8	2.79	10.05
					COLD STAB	1.65	39.23	825.2	.94	9.95
IDLE HC,PPM/HEXANE				47.	HOT TRANS	1.35	24.20	756.2	1.95	11.11
IDLE CO,PCT (MEAS)				.49						
IDLE CO,PCT (SPEC)				99.99	1975 FTP	1.70	35.76	803.2	1.60	10.26
OTHER TESTS: MODAL, THE 5 SHORT CYCLE TESTS										
5055	1975	CADI	DEVI	500	COLD TRANS	4.07	56.69	833.7	1.79	9.49
					COLD STAB	1.81	17.99	775.5	1.79	10.96
IDLE HC,PPM/HEXANE				35.	HOT TRANS	1.33	15.51	728.8	1.69	11.72
IDLE CO,PCT (MEAS)				.06						
IDLE CO,PCT (SPEC)				99.99	1975 FTP	2.14	25.28	774.7	1.76	10.81
OTHER TESTS: MODAL, THE 5 SHORT CYCLE TESTS										
5056	1975	CHEV	MONZ	140	COLD TRANS	1.69	43.44	391.3	2.99	19.09
					COLD STAB	.32	9.84	439.6	2.39	19.46
IDLE HC,PPM/HEXANE				4.	HOT TRANS	.40	10.33	382.5	3.11	22.19
IDLE CO,PCT (MEAS)				0.00						
IDLE CO,PCT (SPEC)				99.99	1975 FTP	.62	16.89	414.1	2.71	20.05
OTHER TESTS: MODAL, THE 5 SHORT CYCLE TESTS										
5057	1975	CHEV	MONT	350	COLD TRANS	5.05	103.60	568.8	2.89	11.87
					COLD STAB	1.51	38.46	608.9	1.42	13.17
IDLE HC,PPM/HEXANE				6.	HOT TRANS	.75	15.44	564.5	3.06	15.01
IDLE CO,PCT (MEAS)				0.00						
IDLE CO,PCT (SPEC)				99.99	1975 FTP	2.03	45.59	588.5	2.17	13.31
OTHER TESTS: MODAL, THE 5 SHORT CYCLE TESTS										

EMISSION RESULTS IN GRAMS PER MILE
FUEL ECONOMY IN MILES PER GALLON

APPENDIX E

LISTING OF FEDERAL TEST PROCEDURE RESULTS ON INDIVIDUAL VEHICLES

ST. LOUIS

VEHICLE NUMBER	YEAR	MAKE	MODEL	CID	TEST TYPE	HC	CO	CO2	NOXC	FUEL ECONOMY
5058	1975	CHEV	MALI	350	COLD TRANS	3.95	39.63	604.0	3.12	13.08
					COLD STAB	3.33	16.70	645.2	2.00	13.01
IDLE HC,PPM/HEXANE				12.	HOT TRANS	2.56	10.37	578.2	3.00	14.73
IDLE CO,PCT (MEAS)				0.00						
IDLE CO,PCT (SPEC)				99.99	1975 FTP	3.25	19.69	618.4	2.50	13.45
OTHER TESTS: MODAL, THE 5 SHORT CYCLE TESTS										
5059	1975	CHEV	STAW	400	COLD TRANS	1.67	18.79	818.9	4.27	10.40
					COLD STAB	.36	.04	825.8	2.39	10.73
IDLE HC,PPM/HEXANE				7.	HOT TRANS	.55	4.05	718.1	3.76	12.22
IDLE CO,PCT (MEAS)				0.00						
IDLE CO,PCT (SPEC)				99.99	1975 FTP	.68	5.00	795.0	3.15	11.03
OTHER TESTS: MODAL, THE 5 SHORT CYCLE TESTS										
5060	1975	CHEV	CAMA	250	COLD TRANS	1.97	20.40	561.3	2.56	14.80
					COLD STAB	1.50	13.43	583.2	1.42	14.57
IDLE HC,PPM/HEXANE				30.	HOT TRANS	1.39	12.60	482.1	2.03	17.53
IDLE CO,PCT (MEAS)				.18						
IDLE CO,PCT (SPEC)				99.99	1975 FTP	1.57	14.64	551.1	1.82	15.33
OTHER TESTS: MODAL, THE 5 SHORT CYCLE TESTS										
5061	1975	CHRY	CORD	360	COLD TRANS	2.32	65.68	785.5	4.55	9.90
					COLD STAB	1.71	70.97	765.9	2.02	10.05
IDLE HC,PPM/HEXANE				9.	HOT TRANS	1.49	38.96	658.4	4.34	12.25
IDLE CO,PCT (MEAS)				.12						
IDLE CO,PCT (SPEC)				.30	1975 FTP	1.78	61.15	740.6	3.17	10.54
OTHER TESTS: MODAL, THE 5 SHORT CYCLE TESTS										
5062	1975	DODG	DART	318	COLD TRANS	3.10	85.94	653.5	1.42	11.12
					COLD STAB	1.00	29.23	695.6	1.17	11.92
IDLE HC,PPM/HEXANE				50.	HOT TRANS	.72	12.39	601.2	1.69	14.25
IDLE CO,PCT (MEAS)				1.15						
IDLE CO,PCT (SPEC)				.30	1975 FTP	1.35	36.31	661.1	1.36	12.28
OTHER TESTS: MODAL, THE 5 SHORT CYCLE TESTS										

EMISSION RESULTS IN GRAMS PER MILE
FUEL ECONOMY IN MILES PER GALLON

APPENDIX E

LISTING OF FEDERAL TEST PROCEDURE RESULTS ON INDIVIDUAL VEHICLES

ST. LOUIS

VEHICLE NUMBER	YEAR	MAKE	MODEL	CID	TEST TYPE	HC	CO	CO2	NOXC	FUEL ECONOMY
5063	1975	FORD	PINT	140	COLD TRANS	5.33	50.22	461.0	2.05	15.94
					COLD STAB	.97	19.16	475.5	1.43	17.45
IDLE HC,PPM/HEXANE				13.	HOT TRANS	3.01	16.07	401.5	2.14	20.34
IDLE CO,PCT (MEAS)				.34						
IDLE CO,PCT (SPEC)				99.99	1975 FTP	2.42	24.71	452.3	1.75	17.79
OTHER TESTS: MODAL, THE 5 SHORT CYCLE TESTS										
5064	1975	FORD	MAVE	302	COLD TRANS	4.22	36.47	764.5	2.91	10.63
					COLD STAB	1.86	14.41	782.3	1.73	10.95
IDLE HC,PPM/HEXANE				5.	HOT TRANS	2.13	11.41	641.8	3.08	13.32
IDLE CO,PCT (MEAS)				.02						
IDLE CO,PCT (SPEC)				99.99	1975 FTP	2.42	18.13	740.3	2.34	11.43
OTHER TESTS: MODAL, THE 5 SHORT CYCLE TESTS										
5065	1975	FORD	LTD	400	COLD TRANS	3.68	66.05	784.6	2.42	9.86
					COLD STAB	2.56	25.75	770.6	2.48	10.84
IDLE HC,PPM/HEXANE				64.	HOT TRANS	1.88	21.50	709.1	2.53	11.85
IDLE CO,PCT (MEAS)				.49						
IDLE CO,PCT (SPEC)				99.99	1975 FTP	2.60	32.88	756.7	2.48	10.87
OTHER TESTS: MODAL, THE 5 SHORT CYCLE TESTS										
5066	1975	FORD	GRAN	250	COLD TRANS	1.46	13.55	597.9	4.21	14.23
					COLD STAB	.33	.37	605.4	2.74	14.62
IDLE HC,PPM/HEXANE				8.	HOT TRANS	.43	.89	557.8	3.11	15.83
IDLE CO,PCT (MEAS)				0.00						
IDLE CO,PCT (SPEC)				99.99	1975 FTP	.59	3.22	590.9	3.14	14.85
OTHER TESTS: MODAL, THE 5 SHORT CYCLE TESTS										
5067	1975	FORD	GRAN	302	COLD TRANS	2.57	10.13	614.9	4.19	13.89
					COLD STAB	.90	.42	632.6	2.38	13.95
IDLE HC,PPM/HEXANE				25.	HOT TRANS	.52	5.10	541.6	4.04	16.10
IDLE CO,PCT (MEAS)				.01						
IDLE CO,PCT (SPEC)				99.99	1975 FTP	1.14	3.70	604.1	3.21	14.47
OTHER TESTS: MODAL, THE 5 SHORT CYCLE TESTS										

EMISSION RESULTS IN GRAMS PER MILE
FUEL ECONOMY IN MILES PER GALLON

APPENDIX E

LISTING OF FEDERAL TEST PROCEDURE RESULTS ON INDIVIDUAL VEHICLES

ST. LOUIS

VEHICLE NUMBER	YEAR	MAKE	MODEL	CID	TEST TYPE	HC	CO	CO2	NOXC	FUEL ECONOMY
5068	1975	MERC	MONG	351	COLD TRANS	2.77	34.07	827.2	4.95	9.98
					COLD STAB	1.00	19.99	797.2	3.03	10.67
IDLE HC,PPM/HEXANE				24.	HOT TRANS	.83	11.79	723.9	5.06	11.91
IDLE CO,PCT (MEAS)				.16						
IDLE CO,PCT (SPEC)				99.99	1975 FTP	1.32	20.65	783.4	3.98	10.82
OTHER TESTS: MODAL, THE 5 SHORT CYCLE TESTS										
5069	1975	OLDS	CUTL	350	COLD TRANS	1.74	22.38	683.9	1.90	12.25
					COLD STAB	.43	5.35	660.0	1.64	13.25
IDLE HC,PPM/HEXANE				5.	HOT TRANS	.76	7.87	596.4	1.79	14.52
IDLE CO,PCT (MEAS)				0.00						
IDLE CO,PCT (SPEC)				99.99	1975 FTP	.79	9.54	647.5	1.73	13.35
OTHER TESTS: MODAL, THE 5 SHORT CYCLE TESTS										
5070	1975	OLDS	98	455	COLD TRANS	3.79	23.83	785.1	3.44	10.63
					COLD STAB	1.50	22.36	719.9	2.22	11.68
IDLE HC,PPM/HEXANE				95.	HOT TRANS	1.18	11.45	679.9	3.13	12.65
IDLE CO,PCT (MEAS)				1.30						
IDLE CO,PCT (SPEC)				99.99	1975 FTP	1.89	19.69	722.4	2.72	11.69
OTHER TESTS: MODAL, THE 5 SHORT CYCLE TESTS										
5071	1975	PLYM	VALI	225	COLD TRANS	4.34	79.66	435.1	4.64	15.46
					COLD STAB	3.98	95.45	397.2	3.10	15.85
IDLE HC,PPM/HEXANE				140.	HOT TRANS	2.94	52.76	374.8	3.23	19.00
IDLE CO,PCT (MEAS)				2.60						
IDLE CO,PCT (SPEC)				.30	1975 FTP	3.77	80.55	398.9	3.45	16.51
OTHER TESTS: MODAL, THE 5 SHORT CYCLE TESTS										
5072	1975	PLYM	VALI	318	COLD TRANS	4.30	77.13	629.2	1.28	11.62
					COLD STAB	1.84	50.55	646.8	.67	12.12
IDLE HC,PPM/HEXANE				16.	HOT TRANS	1.85	31.53	518.1	1.13	15.48
IDLE CO,PCT (MEAS)				.01						
IDLE CO,PCT (SPEC)				.30	1975 FTP	2.35	50.83	608.1	.92	12.76
OTHER TESTS: MODAL, THE 5 SHORT CYCLE TESTS										

EMISSION RESULTS IN GRAMS PER MILE
FUEL ECONOMY IN MILES PER GALLON

APPENDIX E

LISTING OF FEDERAL TEST PROCEDURE RESULTS ON INDIVIDUAL VEHICLES

ST. LOUIS

VEHICLE NUMBER	YEAR	MAKE	MODEL	CID	TEST TYPE	HC	CO	CO2	NOXC	FUEL ECONOMY
5073	1975	PONT	CATA	400	COLD TRANS	7.00	87.83	658.6	3.66	10.84
					COLD STAB	3.58	102.28	604.8	2.73	11.42
IDLE HC,PPM/HEXANE				3.	HOT TRANS	2.80	49.88	584.2	4.58	13.22
IDLE CO,PCT (MEAS)				.06						
IDLE CO,PCT (SPEC)				99.99	1975 FTP	4.07	85.01	610.2	3.43	11.73
OTHER TESTS: MODAL, THE 5 SHORT CYCLE TESTS										
5074	1975	PONT	FIRE	350	COLD TRANS	5.30	80.43	592.0	3.75	12.07
					COLD STAB	4.13	73.42	588.2	3.16	12.38
IDLE HC,PPM/HEXANE				50.	HOT TRANS	2.88	43.22	531.3	4.19	14.59
IDLE CO,PCT (MEAS)				.80						
IDLE CO,PCT (SPEC)				99.99	1975 FTP	4.03	66.62	573.5	3.56	12.85
OTHER TESTS: MODAL, THE 5 SHORT CYCLE TESTS										
5075	1975	DATS	B210	85	COLD TRANS	1.78	20.42	346.9	3.29	23.08
					COLD STAB	1.26	13.58	321.9	2.07	25.56
IDLE HC,PPM/HEXANE				90.	HOT TRANS	1.15	10.80	302.2	2.91	27.49
IDLE CO,PCT (MEAS)				.60						
IDLE CO,PCT (SPEC)				2.00	1975 FTP	1.33	14.23	321.7	2.55	25.48
OTHER TESTS: MODAL, THE 5 SHORT CYCLE TESTS										
5076	1975	TOYO	CELI	133	COLD TRANS	1.48	15.50	457.1	8.15	18.25
					COLD STAB	1.63	19.93	482.2	4.99	17.11
IDLE HC,PPM/HEXANE				10.	HOT TRANS	1.25	9.30	413.7	7.70	20.53
IDLE CO,PCT (MEAS)				.14						
IDLE CO,PCT (SPEC)				99.99	1975 FTP	1.50	16.12	458.4	6.38	18.17
OTHER TESTS: MODAL, THE 5 SHORT CYCLE TESTS										
5077	1975	TOYO	CORO	97	COLD TRANS	2.19	15.82	400.1	2.84	20.55
					COLD STAB	.70	10.32	444.6	1.41	19.17
IDLE HC,PPM/HEXANE				15.	HOT TRANS	.66	7.88	367.4	2.36	23.24
IDLE CO,PCT (MEAS)				.03						
IDLE CO,PCT (SPEC)				99.99	1975 FTP	1.00	10.78	414.4	1.96	20.43
OTHER TESTS: MODAL, THE 5 SHORT CYCLE TESTS										

EMISSION RESULTS IN GRAMS PER MILE
FUEL ECONOMY IN MILES PER GALLON

APPENDIX E

LISTING OF FEDERAL TEST PROCEDURE RESULTS ON INDIVIDUAL VEHICLES

ST. LOUIS

VEHICLE NUMBER	YEAR	MAKE	MODEL	CID	TEST TYPE	HC	CO	CO2	NOXC	FUEL ECONOMY
5078	1975	VOLK	SCIR	90	COLD TRANS	1.14	17.11	427.5	1.19	19.38
					COLD STAB	.32	.55	490.7	1.07	18.02
IDLE HC,PPM/HEXANE				8.	HOT TRANS	.41	1.61	413.4	1.29	21.27
IDLE CO,PCT (MEAS)				0.00						
IDLE CO,PCT (SPEC)				2.00	1975 FTP	.51	4.25	456.6	1.15	19.09
OTHER TESTS: MODAL, THE 5 SHORT CYCLE TESTS										
5317	1975	AMC	MATA	304	COLD TRANS	8.02	44.25	656.3	3.12	11.81
					COLD STAB	.37	.50	658.3	1.60	13.44
IDLE HC,PPM/HEXANE				5.	HOT TRANS	1.37	6.58	597.2	2.75	14.50
IDLE CO,PCT (MEAS)				0.00						
IDLE CO,PCT (SPEC)				99.99	1975 FTP	2.22	11.16	641.2	2.23	13.33
OTHER TESTS: THE 5 SHORT CYCLE TESTS										
5318	1975	BUIC	SKYH	231	COLD TRANS	3.68	42.00	445.6	2.88	16.96
					COLD STAB	2.45	65.03	506.1	1.12	14.41
IDLE HC,PPM/HEXANE				60.	HOT TRANS	2.08	25.83	433.8	2.49	18.45
IDLE CO,PCT (MEAS)				1.35						
IDLE CO,PCT (SPEC)				99.99	1975 FTP	2.60	49.60	473.9	1.86	15.85
OTHER TESTS: THE 5 SHORT CYCLE TESTS										
5320	1975	CHEV	MONZ	140	COLD TRANS	2.96	55.71	351.3	2.35	19.80
					COLD STAB	1.68	23.61	397.0	2.88	20.20
IDLE HC,PPM/HEXANE				40.	HOT TRANS	1.33	16.88	344.3	3.21	23.67
IDLE CO,PCT (MEAS)				.70						
IDLE CO,PCT (SPEC)				99.99	1975 FTP	1.85	28.38	373.2	2.86	20.95
OTHER TESTS: THE 5 SHORT CYCLE TESTS										
5321	1975	CHEV	IMPA	350	COLD TRANS	1.55	7.72	662.6	4.87	13.06
					COLD STAB	.39	.81	660.6	2.63	13.38
IDLE HC,PPM/HEXANE				3.	HOT TRANS	.56	1.08	603.1	4.18	14.63
IDLE CO,PCT (MEAS)				0.00						
IDLE CO,PCT (SPEC)				99.99	1975 FTP	.67	2.31	645.3	3.51	13.63
OTHER TESTS: THE 5 SHORT CYCLE TESTS										

EMISSION RESULTS IN GRAMS PER MILE
FUEL ECONOMY IN MILES PER GALLON

APPENDIX E

LISTING OF FEDERAL TEST PROCEDURE RESULTS ON INDIVIDUAL VEHICLES

ST. LOUIS

VEHICLE NUMBER	YEAR	MAKE	MODEL	CID	TEST TYPE	HC	CO	CO2	NOXC	FUEL ECONOMY
5322	1975	CHEV	STAW	350	COLD TRANS	3.81	75.69	606.3	3.17	12.04
					COLD STAB	4.51	103.63	583.8	1.47	11.66
IDLE HC,PPM/HEXANE				74.	HOT TRANS	2.72	47.90	561.1	2.99	13.76
IDLE CO,PCT (MEAS)				1.20						
IDLE CO,PCT (SPEC)				99.99	1975 FTP	3.88	82.67	582.2	2.24	12.25
OTHER TESTS: THE 5 SHORT CYCLE TESTS										
5323	1975	CHEV	CAMA	350	COLD TRANS	1.80	28.75	648.7	3.95	12.69
					COLD STAB	.19	1.80	649.1	1.89	13.60
IDLE HC,PPM/HEXANE				6.	HOT TRANS	.43	3.31	582.6	3.68	15.06
IDLE CO,PCT (MEAS)				0.00						
IDLE CO,PCT (SPEC)				99.99	1975 FTP	.59	7.76	630.9	2.80	13.76
OTHER TESTS: THE 5 SHORT CYCLE TESTS										
5324	1975	CHEV	IMPA	400	COLD TRANS	2.50	26.16	690.0	5.65	12.01
					COLD STAB	.93	1.33	727.9	3.62	12.11
IDLE HC,PPM/HEXANE				26.	HOT TRANS	.98	2.78	647.3	6.12	13.56
IDLE CO,PCT (MEAS)				.08						
IDLE CO,PCT (SPEC)				99.99	1975 FTP	1.27	6.84	698.1	4.72	12.45
OTHER TESTS: THE 5 SHORT CYCLE TESTS										
5325	1975	DODG	DART	318	COLD TRANS	2.22	34.93	578.4	3.30	13.86
					COLD STAB	1.27	27.99	567.3	2.92	14.42
IDLE HC,PPM/HEXANE				12.	HOT TRANS	.79	9.50	532.5	3.73	16.14
IDLE CO,PCT (MEAS)				.25						
IDLE CO,PCT (SPEC)				.30	1975 FTP	1.33	24.37	560.1	3.22	14.73
OTHER TESTS: THE 5 SHORT CYCLE TESTS										
5326	1975	FORD	MUST	140	COLD TRANS	1.61	22.59	430.6	2.85	18.84
					COLD STAB	.84	23.17	455.1	1.76	17.96
IDLE HC,PPM/HEXANE				50.	HOT TRANS	1.19	13.80	399.7	2.67	20.88
IDLE CO,PCT (MEAS)				1.20						
IDLE CO,PCT (SPEC)				99.99	1975 FTP	1.09	20.49	434.9	2.23	18.86
OTHER TESTS: THE 5 SHORT CYCLE TESTS										

EMISSION RESULTS IN GRAMS PER MILE
FUEL ECONOMY IN MILES PER GALLON

APPENDIX E

LISTING OF FEDERAL TEST PROCEDURE RESULTS ON INDIVIDUAL VEHICLES

ST. LOUIS

VEHICLE NUMBER	YEAR	MAKE	MODEL	CID	TEST TYPE	HC	CO	CO2	NOXC	FUEL ECONOMY
5327	1975	FORD	LTD	400	COLD TRANS	1.61	14.14	865.5	3.53	9.94
					COLD STAB	.91	14.61	853.6	1.65	10.09
IDLE HC,PPM/HEXANE				5.	HOT TRANS	.88	6.04	771.5	3.43	11.32
IDLE CO,PCT (MEAS)				.03						
IDLE CO,PCT (SPEC)				99.99	1975 FTP	1.04	12.17	833.7	2.52	10.37
OTHER TESTS: THE 5 SHORT CYCLE TESTS										
5328	1975	FORD	LTD	351	COLD TRANS	1.73	31.49	934.3	3.49	8.97
					COLD STAB	.44	7.25	966.0	2.95	9.07
IDLE HC,PPM/HEXANE				15.	HOT TRANS	.48	6.98	854.7	4.10	10.23
IDLE CO,PCT (MEAS)				.02						
IDLE CO,PCT (SPEC)				99.99	1975 FTP	.71	12.17	929.1	3.38	9.34
OTHER TESTS: THE 5 SHORT CYCLE TESTS										
5329	1975	LINC	MRK4	460	COLD TRANS	12.07	478.15	730.3	.46	5.84
					COLD STAB	9.35	416.27	841.2	.44	5.82
IDLE HC,PPM/HEXANE				38.	HOT TRANS	9.03	437.04	688.5	.41	6.32
IDLE CO,PCT (MEAS)				.32						
IDLE CO,PCT (SPEC)				99.99	1975 FTP	9.83	434.67	776.7	.44	5.95
OTHER TESTS: THE 5 SHORT CYCLE TESTS										
5330	1975	MERC	COUG	351	COLD TRANS	3.81	59.93	754.4	9.58	10.31
					COLD STAB	1.30	5.33	686.6	6.11	12.70
IDLE HC,PPM/HEXANE				33.	HOT TRANS	1.97	5.64	648.9	7.24	13.37
IDLE CO,PCT (MEAS)				.01						
IDLE CO,PCT (SPEC)				99.99	1975 FTP	2.00	16.65	690.2	7.13	12.28
OTHER TESTS: THE 5 SHORT CYCLE TESTS										
5331	1975	OLDS	CUTL	260	COLD TRANS	2.33	28.49	578.2	4.05	14.08
					COLD STAB	.34	.85	523.7	2.93	16.87
IDLE HC,PPM/HEXANE				13.	HOT TRANS	.43	5.25	505.4	3.76	17.23
IDLE CO,PCT (MEAS)				0.00						
IDLE CO,PCT (SPEC)				99.99	1975 FTP	.78	7.74	529.9	3.39	16.30
OTHER TESTS: THE 5 SHORT CYCLE TESTS										

EMISSION RESULTS IN GRAMS PER MILE
FUEL ECONOMY IN MILES PER GALLON

APPENDIX E

LISTING OF FEDERAL TEST PROCEDURE RESULTS ON INDIVIDUAL VEHICLES

ST. LOUIS

VEHICLE NUMBER	YEAR	MAKE	MODEL	CID	TEST TYPE	HC	CO	CO2	NOXC	FUEL ECONOMY
5332	1975	OLDS	CUTL	350	COLD TRANS	2.67	16.04	641.1	1.70	13.15
					COLD STAB	.28	.95	626.1	1.37	14.12
IDLE HC,PPM/HEXANE				0.	HOT TRANS	.66	3.74	576.5	1.75	15.19
IDLE CO,PCT (MEAS)				0.00						
IDLE CO,PCT (SPEC)				99.99	1975 FTP	.87	4.82	615.6	1.54	14.18
OTHER TESTS: THE 5 SHORT CYCLE TESTS										
5333	1975	PLYM	FURY	318	COLD TRANS	2.23	42.50	554.9	5.33	14.12
					COLD STAB	1.30	37.30	661.8	4.04	12.25
IDLE HC,PPM/HEXANE				15.	HOT TRANS	1.12	16.22	571.3	5.63	14.78
IDLE CO,PCT (MEAS)				.25						
IDLE CO,PCT (SPEC)				.30	1975 FTP	1.44	32.62	615.1	4.74	13.23
OTHER TESTS: THE 5 SHORT CYCLE TESTS										
5334	1975	PONT	GRNP	400	COLD TRANS	3.52	80.78	647.2	1.79	11.30
					COLD STAB	3.49	92.45	625.5	1.42	11.35
IDLE HC,PPM/HEXANE				57.	HOT TRANS	2.35	61.11	547.3	1.95	13.64
IDLE CO,PCT (MEAS)				1.20						
IDLE CO,PCT (SPEC)				99.99	1975 FTP	3.19	81.50	608.7	1.64	11.88
OTHER TESTS: THE 5 SHORT CYCLE TESTS										
5335	1975	DATS	710	119	COLD TRANS	1.64	30.25	361.3	3.75	21.44
					COLD STAB	1.24	19.22	412.0	3.06	19.90
IDLE HC,PPM/HEXANE				7.	HOT TRANS	1.52	22.51	352.0	3.84	22.63
IDLE CO,PCT (MEAS)				.06						
IDLE CO,PCT (SPEC)				99.99	1975 FTP	1.40	22.39	385.2	3.42	20.89
OTHER TESTS: THE 5 SHORT CYCLE TESTS										
5336	1975	FIAT	131	107	COLD TRANS	1.83	41.61	525.9	1.56	14.86
					COLD STAB	.29	15.13	506.8	1.01	16.70
IDLE HC,PPM/HEXANE				6.	HOT TRANS	.36	12.58	459.2	1.48	18.49
IDLE CO,PCT (MEAS)				.13						
IDLE CO,PCT (SPEC)				.70	1975 FTP	.62	19.88	497.7	1.25	16.72
OTHER TESTS: THE 5 SHORT CYCLE TESTS										

EMISSION RESULTS IN GRAMS PER MILE
FUEL ECONOMY IN MILES PER GALLON

APPENDIX E

LISTING OF FEDERAL TEST PROCEDURE RESULTS ON INDIVIDUAL VEHICLES

ST. LOUIS

VEHICLE NUMBER	YEAR	MAKE	MODEL	CID	TEST TYPE	HC	CO	CO2	NOXC	FUEL ECONOMY
5337	1975	HOND	CVCC	91	COLD TRANS	1.79	9.06	365.8	2.91	23.01
					COLD STAB	.33	3.97	371.0	1.67	23.46
IDLE HC,PPM/HEXANE				-0.	HOT TRANS	.69	3.74	327.5	2.59	26.45
IDLE CO,PCT (MEAS)				0.00						
IDLE CO,PCT (SPEC)				99.99	1975 FTP	.73	4.96	358.1	2.18	24.11
OTHER TESTS: THE 5 SHORT CYCLE TESTS										
5338	1975	MAZD	STAW	70	COLD TRANS	1.65	12.74	636.3	2.51	13.42
					COLD STAB	.35	6.42	702.8	1.00	12.43
IDLE HC,PPM/HEXANE				9.	HOT TRANS	1.21	7.49	566.3	2.21	15.25
IDLE CO,PCT (MEAS)				0.00						
IDLE CO,PCT (SPEC)				.50	1975 FTP	.85	8.01	651.9	1.64	13.30
OTHER TESTS: THE 5 SHORT CYCLE TESTS										
4080	1974	AMC	AMBA	360	COLD TRANS	23.85	57.86	658.2	6.29	10.76
					COLD STAB	17.16	38.68	563.7	4.01	13.07
IDLE HC,PPM/HEXANE				1050.	HOT TRANS	18.39	23.91	561.0	7.26	13.51
IDLE CO,PCT (MEAS)				2.00						
IDLE CO,PCT (SPEC)				.75	1975 FTP	18.87	38.60	582.4	5.37	12.63
OTHER TESTS: MODAL, THE 5 SHORT CYCLE TESTS										
4081	1974	BUIC	CNTY	350	COLD TRANS	10.90	129.75	600.2	4.22	10.58
					COLD STAB	3.27	61.40	642.1	1.78	11.85
IDLE HC,PPM/HEXANE				17.	HOT TRANS	2.98	29.62	558.8	4.67	14.44
IDLE CO,PCT (MEAS)				.22						
IDLE CO,PCT (SPEC)				.30	1975 FTP	4.76	66.80	610.7	3.07	12.14
OTHER TESTS: MODAL, THE 5 SHORT CYCLE TESTS										
4082	1974	CADI	DEVI	472	COLD TRANS	4.53	122.23	891.1	1.93	8.09
					COLD STAB	2.43	45.70	827.5	2.05	9.78
IDLE HC,PPM/HEXANE				30.	HOT TRANS	2.03	35.15	778.1	2.74	10.57
IDLE CO,PCT (MEAS)				.33						
IDLE CO,PCT (SPEC)				.40	1975 FTP	2.75	58.57	827.1	2.21	9.56
OTHER TESTS: MODAL, THE 5 SHORT CYCLE TESTS										

EMISSION RESULTS IN GRAMS PER MILE
FUEL ECONOMY IN MILES PER GALLON

APPENDIX E

LISTING OF FEDERAL TEST PROCEDURE RESULTS ON INDIVIDUAL VEHICLES

ST. LOUIS

VEHICLE NUMBER	YEAR	MAKE	MODEL	CID	TEST TYPE	HC	CO	CO2	NOXC	FUEL ECONOMY
4083	1974	CHEV	VEGA	140	COLD TRANS	3.60	42.40	402.9	3.27	18.45
					COLD STAB	3.07	21.32	403.2	2.40	19.88
IDLE HC,PPM/HEXANE				240.	HOT TRANS	2.70	16.91	362.0	3.50	22.35
IDLE CO,PCT (MEAS)				.75						
IDLE CO,PCT (SPEC)				.50	1975 FTP	3.08	24.45	391.9	2.88	20.17
OTHER TESTS: MODAL, THE 5 SHORT CYCLE TESTS										
4084	1974	CHEV	CHEL	350	COLD TRANS	3.87	41.41	633.2	2.58	12.49
					COLD STAB	2.62	34.17	625.3	.97	12.91
IDLE HC,PPM/HEXANE				190.	HOT TRANS	2.94	21.28	538.8	2.25	15.26
IDLE CO,PCT (MEAS)				.47						
IDLE CO,PCT (SPEC)				1.20	1975 FTP	2.96	32.14	603.3	1.65	13.38
OTHER TESTS: MODAL, THE 5 SHORT CYCLE TESTS										
4085	1974	CHEV	NOVA	250	COLD TRANS	3.44	38.22	502.8	4.85	15.47
					COLD STAB	2.63	40.87	437.9	1.43	17.39
IDLE HC,PPM/HEXANE				210.	HOT TRANS	2.56	18.27	420.3	2.51	19.41
IDLE CO,PCT (MEAS)				3.00						
IDLE CO,PCT (SPEC)				.30	1975 FTP	2.78	34.16	446.5	2.43	17.44
OTHER TESTS: MODAL, THE 5 SHORT CYCLE TESTS										
4086	1974	CHEV	NOVA	350	COLD TRANS	3.68	54.25	652.0	2.65	11.85
					COLD STAB	2.50	62.07	687.1	.81	11.20
IDLE HC,PPM/HEXANE				153.	HOT TRANS	2.78	38.15	561.3	2.10	14.09
IDLE CO,PCT (MEAS)				2.50						
IDLE CO,PCT (SPEC)				.50	1975 FTP	2.82	53.94	645.5	1.54	12.01
OTHER TESTS: MODAL, THE 5 SHORT CYCLE TESTS										
4087	1974	CHEV	CHEL	350	COLD TRANS	4.11	47.89	721.1	2.09	10.97
					COLD STAB	1.49	18.29	745.4	1.24	11.40
IDLE HC,PPM/HEXANE				100.	HOT TRANS	2.61	14.23	641.2	1.93	13.21
IDLE CO,PCT (MEAS)				.60						
IDLE CO,PCT (SPEC)				.50	1975 FTP	2.33	23.27	712.0	1.60	11.74
OTHER TESTS: MODAL, THE 5 SHORT CYCLE TESTS										

EMISSION RESULTS IN GRAMS PER MILE
FUEL ECONOMY IN MILES PER GALLON

APPENDIX E

LISTING OF FEDERAL TEST PROCEDURE RESULTS ON INDIVIDUAL VEHICLES

ST. LOUIS

VEHICLE NUMBER	YEAR	MAKE	MODEL	CID	TEST TYPE	HC	CO	CO2	NOXC	FUEL ECONOMY
4088	1974	CHEV	STAW	400	COLD TRANS	7.40	162.85	751.4	2.33	8.61
					COLD STAB	5.46	150.23	737.2	.91	8.96
IDLE HC,PPM/HEXANE				107.	HOT TRANS	6.13	105.05	644.8	2.09	10.70
IDLE CO,PCT (MEAS)				2.40						
IDLE CO,PCT (SPEC)				.50	1975 FTP	6.04	140.50	714.9	1.53	9.30
OTHER TESTS: MODAL, THE 5 SHORT CYCLE TESTS										
4089	1974	CHRY	NEWP	400	COLD TRANS	4.75	99.72	655.3	5.37	10.73
					COLD STAB	3.50	105.35	722.8	2.07	9.87
IDLE HC,PPM/HEXANE				108.	HOT TRANS	3.26	69.27	588.2	5.52	12.55
IDLE CO,PCT (MEAS)				2.50						
IDLE CO,PCT (SPEC)				.50	1975 FTP	3.69	94.35	672.2	3.69	10.67
OTHER TESTS: MODAL, THE 5 SHORT CYCLE TESTS										
4090	1974	DODG	CHAR	318	COLD TRANS	5.17	76.27	577.4	2.96	12.44
					COLD STAB	4.16	92.43	548.4	1.58	12.56
IDLE HC,PPM/HEXANE				28.	HOT TRANS	3.58	47.91	514.7	3.41	14.76
IDLE CO,PCT (MEAS)				.45						
IDLE CO,PCT (SPEC)				.50	1975 FTP	4.21	76.96	545.2	2.36	13.06
OTHER TESTS: MODAL, THE 5 SHORT CYCLE TESTS										
4091	1974	FORD	PINT	122	COLD TRANS	2.88	44.36	349.4	2.73	20.72
					COLD STAB	1.74	29.37	378.2	1.68	20.65
IDLE HC,PPM/HEXANE				60.	HOT TRANS	1.77	18.90	313.6	2.79	25.44
IDLE CO,PCT (MEAS)				1.80						
IDLE CO,PCT (SPEC)				.50	1975 FTP	1.98	29.60	354.6	2.20	21.78
OTHER TESTS: MODAL, THE 5 SHORT CYCLE TESTS										
4092	1974	FORD	TORI	302	COLD TRANS	6.81	67.16	564.9	6.07	12.82
					COLD STAB	3.70	43.43	553.4	2.94	14.01
IDLE HC,PPM/HEXANE				118.	HOT TRANS	3.62	22.92	508.5	6.64	15.96
IDLE CO,PCT (MEAS)				1.03						
IDLE CO,PCT (SPEC)				.50	1975 FTP	4.32	42.72	543.5	4.60	14.22
OTHER TESTS: MODAL, THE 5 SHORT CYCLE TESTS										

EMISSION RESULTS IN GRAMS PER MILE
FUEL ECONOMY IN MILES PER GALLON

APPENDIX E

LISTING OF FEDERAL TEST PROCEDURE RESULTS ON INDIVIDUAL VEHICLES

ST. LOUIS

VEHICLE NUMBER	YEAR	MAKE	MODEL	CID	TEST TYPE	HC	CO	CO2	NOXC	FUEL ECONOMY
4093	1974	FORD	PINT	140	COLD TRANS	3.86	79.43	439.7	4.41	15.39
					COLD STAB	3.96	86.57	377.5	2.88	16.87
IDLE HC,PPM/HEXANE				27.	HOT TRANS	3.12	55.06	365.0	4.17	19.24
IDLE CO,PCT (MEAS)				.65						
IDLE CO,PCT (SPEC)				.15	1975 FTP	3.71	76.50	386.9	3.55	17.11
OTHER TESTS: MODAL, THE 5 SHORT CYCLE TESTS										
4094	1974	FORD	STAW	400	COLD TRANS	3.73	62.64	797.7	4.27	9.78
					COLD STAB	3.65	83.00	787.5	2.02	9.55
IDLE HC,PPM/HEXANE				75.	HOT TRANS	4.20	57.25	700.5	2.68	11.04
IDLE CO,PCT (MEAS)				1.35						
IDLE CO,PCT (SPEC)				99.99	1975 FTP	3.82	71.78	765.9	2.66	9.96
OTHER TESTS: MODAL, THE 5 SHORT CYCLE TESTS										
4095	1974	FORD	STAW	351	COLD TRANS	6.32	81.92	660.1	6.53	10.97
					COLD STAB	5.91	104.38	603.6	2.65	11.29
IDLE HC,PPM/HEXANE				370.	HOT TRANS	4.41	57.99	566.0	6.86	13.22
IDLE CO,PCT (MEAS)				4.90						
IDLE CO,PCT (SPEC)				.40	1975 FTP	5.58	87.10	605.0	4.60	11.69
OTHER TESTS: MODAL, THE 5 SHORT CYCLE TESTS										
4096	1974	MERC	MONT	302	COLD TRANS	8.70	69.15	538.7	7.39	13.15
					COLD STAB	12.94	122.21	498.0	3.09	12.14
IDLE HC,PPM/HEXANE				8.	HOT TRANS	9.49	68.22	493.7	6.78	14.07
IDLE CO,PCT (MEAS)				2.70						
IDLE CO,PCT (SPEC)				99.99	1975 FTP	11.13	96.56	505.2	4.98	12.82
OTHER TESTS: MODAL, THE 5 SHORT CYCLE TESTS										
4097	1974	OLDS	CUTL	350	COLD TRANS	5.12	34.71	679.1	4.80	11.84
					COLD STAB	3.54	29.81	730.6	2.77	11.25
IDLE HC,PPM/HEXANE				325.	HOT TRANS	3.41	18.48	629.6	4.88	13.26
IDLE CO,PCT (MEAS)				1.20						
IDLE CO,PCT (SPEC)				.30	1975 FTP	3.83	27.72	692.4	3.76	11.86
OTHER TESTS: MODAL, THE 5 SHORT CYCLE TESTS										

EMISSION RESULTS IN GRAMS PER MILE
FUEL ECONOMY IN MILES PER GALLON

APPENDIX F

LISTING OF FEDERAL TEST PROCEDURE RESULTS ON INDIVIDUAL VEHICLES

ST. LOUIS

VEHICLE NUMBER	YEAR	MAKE	MODEL	CID	TEST TYPE	HC	CO	CO2	NOXC	FUEL ECONOMY
4098	1974	OLDS	STAW	455	COLD TRANS	3.04	16.95	866.7	4.52	9.83
					COLD STAB	2.37	7.43	876.8	2.06	9.91
IDLE HC,PPM/HEXANE				107.	HOT TRANS	2.08	6.55	756.3	3.75	11.48
IDLE CO,PCT (MEAS)				.34						
IDLE CO,PCT (SPEC)				.50	1975 FTP	2.43	9.15	841.8	3.03	10.27
OTHER TESTS: MODAL, THE 5 SHORT CYCLE TESTS										
4099	1974	PLYM	SCAM	318	COLD TRANS	4.93	78.43	590.6	6.90	12.17
					COLD STAB	3.86	83.01	582.6	2.34	12.24
IDLE HC,PPM/HEXANE				210.	HOT TRANS	3.38	41.41	535.7	6.52	14.51
IDLE CO,PCT (MEAS)				3.80						
IDLE CO,PCT (SPEC)				.50	1975 FTP	3.95	70.72	571.5	4.42	12.77
OTHER TESTS: MODAL, THE 5 SHORT CYCLE TESTS										
4100	1974	PLYM	DUST	225	COLD TRANS	3.56	30.84	564.2	2.90	14.22
					COLD STAB	1.94	6.82	537.9	1.74	16.00
IDLE HC,PPM/HEXANE				180.	HOT TRANS	4.64	9.90	471.6	2.41	17.68
IDLE CO,PCT (MEAS)				.08						
IDLE CO,PCT (SPEC)				.50	1975 FTP	3.01	12.60	525.2	2.16	16.00
OTHER TESTS: MODAL, THE 5 SHORT CYCLE TESTS										
4101	1974	PONT	GRNP	400	COLD TRANS	4.36	35.22	894.0	1.96	9.21
					COLD STAB	6.76	10.63	906.0	1.42	9.40
IDLE HC,PPM/HEXANE				60.	HOT TRANS	5.83	11.25	731.5	2.13	11.56
IDLE CO,PCT (MEAS)				.02						
IDLE CO,PCT (SPEC)				.20	1975 FTP	6.01	15.86	855.9	1.73	9.86
OTHER TESTS: MODAL, THE 5 SHORT CYCLE TESTS										
4102	1974	DATS	710	119	COLD TRANS	3.21	52.45	383.2	3.08	18.65
					COLD STAB	2.59	32.99	350.6	2.33	21.62
IDLE HC,PPM/HEXANE				75.	HOT TRANS	2.36	27.31	331.8	2.78	23.22
IDLE CO,PCT (MEAS)				.20						
IDLE CO,PCT (SPEC)				1.50	1975 FTP	2.65	35.44	352.2	2.61	21.32
OTHER TESTS: MODAL, THE 5 SHORT CYCLE TESTS										

EMISSION RESULTS IN GRAMS PER MILE
FUEL ECONOMY IN MILES PER GALLON

APPENDIX E

LISTING OF FEDERAL TEST PROCEDURE RESULTS ON INDIVIDUAL VEHICLES

ST. LOUIS

VEHICLE NUMBER	YEAR	MAKE	MODEL	CID	TEST TYPE	HC	CO	CO2	NOXC	FUEL ECONOMY
4103	1974	TOYO	CORO	97	COLD TRANS	2.82	37.62	361.2	5.45	20.67
					COLD STAB	2.31	40.12	389.7	2.46	19.29
IDLE HC,PPM/HEXANE				67.	HOT TRANS	1.79	25.22	331.5	4.66	23.56
IDLE CO,PCT (MEAS)				.75						
IDLE CO,PCT (SPEC)				1.50	1975 FTP	2.27	35.54	367.9	3.67	20.59
OTHER TESTS: MODAL, THE 5 SHORT CYCLE TESTS										
4104	1974	TOYO	STAW	120	COLD TRANS	3.75	39.22	426.4	4.80	17.75
					COLD STAB	2.57	44.73	368.1	2.31	19.88
IDLE HC,PPM/HEXANE				180.	HOT TRANS	2.06	26.06	371.7	4.62	21.17
IDLE CO,PCT (MEAS)				2.75						
IDLE CO,PCT (SPEC)				2.50	1975 FTP	2.68	38.50	381.1	3.45	19.72
OTHER TESTS: MODAL, THE 5 SHORT CYCLE TESTS										
4105	1974	VOLK	SEDA	97	COLD TRANS	4.36	45.80	309.7	4.30	22.44
					COLD STAB	3.21	35.81	314.4	3.06	23.31
IDLE HC,PPM/HEXANE				205.	HOT TRANS	2.43	21.46	301.4	4.42	25.89
IDLE CO,PCT (MEAS)				4.70						
IDLE CO,PCT (SPEC)				99.99	1975 FTP	3.23	33.95	309.9	3.69	23.76
OTHER TESTS: MODAL, THE 5 SHORT CYCLE TESTS										
4106	1974	VOLK	SEDA	97	COLD TRANS	3.73	29.49	300.6	4.89	24.74
					COLD STAB	2.98	24.22	313.7	2.80	24.57
IDLE HC,PPM/HEXANE				135.	HOT TRANS	2.90	20.09	287.0	4.41	27.08
IDLE CO,PCT (MEAS)				1.30						
IDLE CO,PCT (SPEC)				99.99	1975 FTP	3.11	24.18	303.7	3.67	25.24
OTHER TESTS: MODAL, THE 5 SHORT CYCLE TESTS										
4339	1974	AMC	HORN	258	COLD TRANS	3.53	66.09	490.1	5.50	14.67
					COLD STAB	3.35	79.20	453.3	2.94	15.09
IDLE HC,PPM/HEXANE				113.	HOT TRANS	3.22	45.90	454.6	6.53	16.53
IDLE CO,PCT (MEAS)				2.60						
IDLE CO,PCT (SPEC)				1.20	1975 FTP	3.35	67.42	461.2	4.45	15.36
OTHER TESTS: THE 5 SHORT CYCLE TESTS										

EMISSION RESULTS IN GRAMS PER MILE
FUEL ECONOMY IN MILES PER GALLON

APPENDIX E

LISTING OF FEDERAL TEST PROCEDURE RESULTS ON INDIVIDUAL VEHICLES

ST. LOUIS

VEHICLE NUMBER	YEAR	MAKE	MODEL	CID	TEST TYPE	HC	CO	CO2	NOXC	FUEL ECONOMY
4340	1974	BUIC	REGA	350	COLD TRANS	3.25	46.23	687.7	4.74	11.52
					COLD STAB	2.49	48.05	665.0	3.14	11.86
IDLE HC,PPM/HEXANE				40.	HOT TRANS	2.12	24.95	593.8	5.40	13.87
IDLE CO,PCT (MEAS)				.75						
IDLE CO,PCT (SPEC)				.30	1975 FTP	2.54	41.37	650.2	4.09	12.27
OTHER TESTS: THE 5 SHORT CYCLE TESTS										
4341	1974	BUIC	RIVI	455	COLD TRANS	5.69	103.84	831.1	7.66	8.77
					COLD STAB	3.38	43.21	787.8	4.84	10.24
IDLE HC,PPM/HEXANE				140.	HOT TRANS	3.12	27.35	699.4	7.32	11.80
IDLE CO,PCT (MEAS)				1.70						
IDLE CO,PCT (SPEC)				.30	1975 FTP	3.78	51.36	772.6	6.10	10.26
OTHER TESTS: THE 5 SHORT CYCLE TESTS										
4342	1974	CHEV	CHEL	350	COLD TRANS	2.59	42.78	736.7	1.92	10.93
					COLD STAB	1.42	24.60	758.1	1.00	11.08
IDLE HC,PPM/HEXANE				90.	HOT TRANS	1.94	22.30	632.7	1.68	13.17
IDLE CO,PCT (MEAS)				.25						
IDLE CO,PCT (SPEC)				.50	1975 FTP	1.81	27.71	719.5	1.38	11.55
OTHER TESTS: THE 5 SHORT CYCLE TESTS										
4343	1974	CHEV	MONT	350	COLD TRANS	4.02	41.58	650.2	3.92	12.19
					COLD STAB	3.10	23.05	629.4	1.52	13.14
IDLE HC,PPM/HEXANE				220.	HOT TRANS	3.38	18.51	552.9	3.43	14.97
IDLE CO,PCT (MEAS)				.10						
IDLE CO,PCT (SPEC)				.50	1975 FTP	3.37	25.63	612.8	2.54	13.37
OTHER TESTS: THE 5 SHORT CYCLE TESTS										
4344	1974	CHEV	CHEL	350	COLD TRANS	11.61	214.24	580.5	1.57	9.30
					COLD STAB	4.15	123.29	639.6	1.20	10.49
IDLE HC,PPM/HEXANE				245.	HOT TRANS	2.89	56.16	543.4	2.90	13.85
IDLE CO,PCT (MEAS)				3.95						
IDLE CO,PCT (SPEC)				.50	1975 FTP	5.34	123.69	601.2	1.74	10.92
OTHER TESTS: THE 5 SHORT CYCLE TESTS										

EMISSION RESULTS IN GRAMS PER MILE
FUEL ECONOMY IN MILES PER GALLON

APPENDIX E

LISTING OF FEDERAL TEST PROCEDURE RESULTS ON INDIVIDUAL VEHICLES

ST. LOUIS

VEHICLE NUMBER	YEAR	MAKE	MODEL	CID	TEST TYPE	HC	CO	CO2	NOXC	FUEL ECONOMY
4345	1974	CHEV	STAW	400	COLD TRANS	3.95	103.00	773.8	4.61	9.36
					COLD STAB	2.65	59.48	684.0	3.19	11.29
IDLE HC,PPM/HEXANE				190.	HOT TRANS	2.26	28.40	676.6	5.39	12.18
IDLE CO,PCT (MEAS)				2.45						
IDLE CO,PCT (SPEC)				.50	1975 FTP	2.81	59.96	700.5	4.08	11.04
OTHER TESTS: THE 5 SHORT CYCLE TESTS										
4346	1974	CHEV	VEGA	140	COLD TRANS	3.49	53.93	439.6	2.34	16.58
					COLD STAB	2.32	31.68	452.8	1.22	17.40
IDLE HC,PPM/HEXANE				125.	HOT TRANS	2.61	24.85	387.2	2.03	20.42
IDLE CO,PCT (MEAS)				1.90						
IDLE CO,PCT (SPEC)				.50	1975 FTP	2.64	34.40	432.2	1.67	17.94
OTHER TESTS: THE 5 SHORT CYCLE TESTS										
4347	1974	DODG	DART	225	COLD TRANS	3.37	39.13	436.8	9.33	17.44
					COLD STAB	3.32	38.72	408.1	7.32	18.51
IDLE HC,PPM/HEXANE				390.	HOT TRANS	2.79	26.41	387.6	7.86	20.27
IDLE CO,PCT (MEAS)				2.80						
IDLE CO,PCT (SPEC)				.50	1975 FTP	3.18	35.44	408.4	7.88	18.72
OTHER TESTS: THE 5 SHORT CYCLE TESTS										
4348	1974	DODG	DART	318	COLD TRANS	6.08	71.35	589.6	4.35	12.31
					COLD STAB	4.61	71.42	566.8	2.17	12.80
IDLE HC,PPM/HEXANE				240.	HOT TRANS	3.82	31.62	520.7	4.77	15.24
IDLE CO,PCT (MEAS)				3.90						
IDLE CO,PCT (SPEC)				.50	1975 FTP	4.70	60.55	558.9	3.33	13.27
OTHER TESTS: THE 5 SHORT CYCLE TESTS										
4349	1974	FORD	TORI	351	COLD TRANS	4.24	60.48	629.2	2.79	12.03
					COLD STAB	3.30	64.52	632.7	1.79	11.92
IDLE HC,PPM/HEXANE				183.	HOT TRANS	3.36	34.75	565.2	2.75	14.08
IDLE CO,PCT (MEAS)				1.90						
IDLE CO,PCT (SPEC)				.40	1975 FTP	3.51	55.57	613.6	2.26	12.46
OTHER TESTS: THE 5 SHORT CYCLE TESTS										

EMISSION RESULTS IN GRAMS PER MILE
FUEL ECONOMY IN MILES PER GALLON

APPENDIX E

LISTING OF FEDERAL TEST PROCEDURE RESULTS ON INDIVIDUAL VEHICLES

ST. LOUIS

VEHICLE NUMBER	YEAR	MAKE	MODEL	CID	TEST TYPE	HC	CO	CO2	NOXC	FUEL ECONOMY
4350	1974	FORD	GALA	400	COLD TRANS	3.83	43.23	749.2	3.95	10.70
					COLD STAB	3.48	87.77	686.7	2.18	10.62
IDLE HC,PPM/HEXANE				255.	HOT TRANS	2.98	42.05	641.2	4.11	12.38
IDLE CO,PCT (MEAS)				5.70						
IDLE CO,PCT (SPEC)				.40	1975 FTP	3.42	66.13	687.2	3.07	11.07
OTHER TESTS: THE 5 SHORT CYCLE TESTS										
4351	1974	FORD	LTD	400	COLD TRANS	18.40	43.62	702.8	7.25	10.70
					COLD STAB	5.65	81.69	677.6	2.33	10.77
IDLE HC,PPM/HEXANE				800.	HOT TRANS	7.86	41.46	609.1	6.58	12.69
IDLE CO,PCT (MEAS)				5.50						
IDLE CO,PCT (SPEC)				.40	1975 FTP	8.87	62.88	664.1	4.50	11.22
OTHER TESTS: THE 5 SHORT CYCLE TESTS										
4352	1974	FORD	MUST	140	COLD TRANS	3.66	81.33	444.3	3.82	15.20
					COLD STAB	4.07	113.47	392.6	1.37	15.20
IDLE HC,PPM/HEXANE				285.	HOT TRANS	3.09	63.89	382.9	3.47	18.00
IDLE CO,PCT (MEAS)				5.05						
IDLE CO,PCT (SPEC)				.15	1975 FTP	3.72	93.32	400.6	2.45	15.88
OTHER TESTS: THE 5 SHORT CYCLE TESTS										
4353	1974	LINC	MRK4	460	COLD TRANS	6.20	206.05	656.2	1.50	8.88
					COLD STAB	4.47	140.62	760.0	1.16	8.92
IDLE HC,PPM/HEXANE				65.	HOT TRANS	4.38	137.37	592.5	1.62	10.79
IDLE CO,PCT (MEAS)				1.00						
IDLE CO,PCT (SPEC)				99.99	1975 FTP	4.80	153.20	692.9	1.36	9.35
OTHER TESTS: THE 5 SHORT CYCLE TESTS										
4354	1974	MERC	MONG	351	COLD TRANS	3.63	51.02	674.4	3.08	11.59
					COLD STAB	2.83	31.73	672.7	1.64	12.13
IDLE HC,PPM/HEXANE				240.	HOT TRANS	2.85	32.29	594.6	2.95	13.56
IDLE CO,PCT (MEAS)				.57						
IDLE CO,PCT (SPEC)				99.99	1975 FTP	3.00	35.85	651.8	2.29	12.37
OTHER TESTS: THE 5 SHORT CYCLE TESTS										

EMISSION RESULTS IN GRAMS PER MILE
FUEL ECONOMY IN MILES PER GALLON

APPENDIX E

LISTING OF FEDERAL TEST PROCEDURE RESULTS ON INDIVIDUAL VEHICLES

ST. LOUIS

VEHICLE NUMBER	YEAR	MAKE	MODEL	CID	TEST TYPE	HC	CO	CO2	NOXC	FUEL ECONOMY
4355	1974	OLDS	CUTL	350	COLD TRANS	8.50	272.32	519.0	.94	9.11
					COLD STAB	6.41	256.66	527.8	.55	9.33
IDLE HC,PPM/HEXANE				200.	HOT TRANS	5.44	204.06	483.7	.92	10.80
IDLE CO,PCT (MEAS)				2.50						
IDLE CO,PCT (SPEC)				.50	1975 FTP	6.58	245.53	514.0	.73	9.64
OTHER TESTS: THE 5 SHORT CYCLE TESTS										
4356	1974	PLYM	FRY3	360	COLD TRANS	7.24	195.14	598.5	2.80	9.56
					COLD STAB	4.91	154.01	621.8	2.47	10.09
IDLE HC,PPM/HEXANE				230.	HOT TRANS	3.98	86.80	591.5	4.61	11.99
IDLE CO,PCT (MEAS)				5.50						
IDLE CO,PCT (SPEC)				.50	1975 FTP	5.14	144.14	608.7	3.12	10.42
OTHER TESTS: THE 5 SHORT CYCLE TESTS										
4357	1974	PONT	BONN	400	COLD TRANS	8.82	132.25	801.9	2.37	8.55
					COLD STAB	9.82	204.66	641.7	1.28	8.92
IDLE HC,PPM/HEXANE				520.	HOT TRANS	6.40	99.09	599.4	2.87	11.45
IDLE CO,PCT (MEAS)				8.00						
IDLE CO,PCT (SPEC)				.20	1975 FTP	8.68	160.95	663.1	1.94	9.41
OTHER TESTS: THE 5 SHORT CYCLE TESTS										
4358	1974	PONT	LEMA	350	COLD TRANS	4.63	60.03	632.2	8.08	11.97
					COLD STAB	4.84	91.31	556.5	4.76	12.41
IDLE HC,PPM/HEXANE				395.	HOT TRANS	3.58	46.08	540.9	8.63	14.21
IDLE CO,PCT (MEAS)				5.20						
IDLE CO,PCT (SPEC)				.30	1975 FTP	4.46	72.53	567.8	6.50	12.75
OTHER TESTS: THE 5 SHORT CYCLE TESTS										
4359	1974	CAPR	SPOR	122	COLD TRANS	4.33	33.29	386.8	2.76	19.60
					COLD STAB	3.30	20.74	418.5	2.00	19.23
IDLE HC,PPM/HEXANE				35.	HOT TRANS	2.86	12.66	360.3	2.88	22.80
IDLE CO,PCT (MEAS)				.42						
IDLE CO,PCT (SPEC)				1.25	1975 FTP	3.39	21.12	396.1	2.40	20.17
OTHER TESTS: THE 5 SHORT CYCLE TESTS										

EMISSION RESULTS IN GRAMS PER MILE
FUEL ECONOMY IN MILES PER GALLON

APPENDIX E

LISTING OF FEDERAL TEST PROCEDURE RESULTS ON INDIVIDUAL VEHICLES

ST. LOUIS

VEHICLE NUMBER	YEAR	MAKE	MODEL	CID	TEST TYPE	HC	CO	CO2	NOXC	FUEL ECONOMY
4360	1974	DATS	B210	79	COLD TRANS	2.92	28.89	337.5	3.02	22.63
					COLD STAB	1.92	15.86	339.3	1.47	23.97
IDLE HC,PPM/HEXANE			250.		HOT TRANS	2.70	11.16	296.4	2.90	27.53
IDLE CO,PCT (MEAS)			2.60							
IDLE CO,PCT (SPEC)			1.50		1975 FTP	2.34	17.26	327.2	2.18	24.53
OTHER TESTS: THE 5 SHORT CYCLE TESTS										
4361	1974	MAZD	STAW	70	COLD TRANS	6.23	23.44	622.8	1.85	13.06
					COLD STAB	.82	7.63	667.3	.58	13.02
IDLE HC,PPM/HEXANE			10.		HOT TRANS	5.07	28.79	512.7	1.44	15.46
IDLE CO,PCT (MEAS)			0.00							
IDLE CO,PCT (SPEC)			1.50		1975 FTP	3.09	16.66	616.0	1.08	13.61
OTHER TESTS: THE 5 SHORT CYCLE TESTS										
3107	1973	AMC	GREM	232	COLD TRANS	4.74	57.63	491.0	2.38	14.88
					COLD STAB	3.94	41.50	569.4	1.83	13.71
IDLE HC,PPM/HEXANE			490.		HOT TRANS	3.14	35.89	449.8	1.98	17.19
IDLE CO,PCT (MEAS)			4.10							
IDLE CO,PCT (SPEC)			1.30		1975 FTP	3.89	43.29	520.7	1.98	14.77
OTHER TESTS: MODAL, THE 5 SHORT CYCLE TESTS										
3108	1973	BUIC	CNTR	455	COLD TRANS	3.34	58.89	829.9	3.98	9.51
					COLD STAB	1.96	26.54	820.9	2.40	10.22
IDLE HC,PPM/HEXANE			105.		HOT TRANS	2.06	15.69	704.8	3.79	12.06
IDLE CO,PCT (MEAS)			.35							
IDLE CO,PCT (SPEC)			1.00		1975 FTP	2.27	30.24	791.1	3.10	10.49
OTHER TESTS: MODAL, THE 5 SHORT CYCLE TESTS										
3109	1973	BUIC	CNTY	350	COLD TRANS	2.54	58.12	743.4	2.76	10.53
					COLD STAB	1.51	51.05	758.6	1.40	10.52
IDLE HC,PPM/HEXANE			120.		HOT TRANS	1.68	29.71	646.4	2.15	12.71
IDLE CO,PCT (MEAS)			3.50							
IDLE CO,PCT (SPEC)			.60		1975 FTP	1.77	46.68	724.9	1.89	11.04
OTHER TESTS: MODAL, THE 5 SHORT CYCLE TESTS										

EMISSION RESULTS IN GRAMS PER MILE
FUEL ECONOMY IN MILES PER GALLON

APPENDIX E

LISTING OF FEDERAL TEST PROCEDURE RESULTS ON INDIVIDUAL VEHICLES

ST. LOUIS

VEHICLE NUMBER	YEAR	MAKE	MODEL	CID	TEST TYPE	HC	CO	CO2	NOXC	FUEL ECONOMY
3110	1973	CADI	DEVI	472	COLD TRANS	3.35	110.95	933.5	2.37	7.94
					COLD STAB	2.08	58.75	927.6	1.54	8.65
IDLE HC,PPM/HEXANE				40.	HOT TRANS	2.18	37.81	790.8	2.27	10.35
IDLE CO,PCT (MEAS)				.60						
IDLE CO,PCT (SPEC)				.50	1975 FTP	2.37	63.78	891.5	1.91	8.88
OTHER TESTS: MODAL, THE 5 SHORT CYCLE TESTS										
3111	1973	CHEV	VEGA	140	COLD TRANS	7.00	69.24	344.8	2.82	18.66
					COLD STAB	7.20	102.23	422.7	1.39	14.64
IDLE HC,PPM/HEXANE				23.	HOT TRANS	5.40	53.38	309.1	2.79	21.64
IDLE CO,PCT (MEAS)				1.85						
IDLE CO,PCT (SPEC)				1.20	1975 FTP	6.67	82.11	375.7	2.07	16.88
OTHER TESTS: MODAL, THE 5 SHORT CYCLE TESTS										
3112	1973	CHEV	MONT	350	COLD TRANS	2.12	59.37	688.7	2.60	11.25
					COLD STAB	1.26	39.32	665.6	1.50	12.13
IDLE HC,PPM/HEXANE				100.	HOT TRANS	1.87	29.68	556.2	2.30	14.58
IDLE CO,PCT (MEAS)				1.80						
IDLE CO,PCT (SPEC)				99.99	1975 FTP	1.60	40.82	640.5	1.94	12.51
OTHER TESTS: MODAL, THE 5 SHORT CYCLE TESTS										
3113	1973	CHEV	CAMA	350	COLD TRANS	3.47	71.62	521.3	3.84	13.76
					COLD STAB	2.55	73.28	546.1	2.07	13.26
IDLE HC,PPM/HEXANE				135.	HOT TRANS	2.25	43.16	485.2	4.16	15.84
IDLE CO,PCT (MEAS)				3.50						
IDLE CO,PCT (SPEC)				1.20	1975 FTP	2.66	64.72	524.3	3.00	13.99
OTHER TESTS: MODAL, THE 5 SHORT CYCLE TESTS										
3114	1973	CHEV	IMPA	350	COLD TRANS	2.92	40.49	698.8	5.73	11.50
					COLD STAB	1.93	24.01	699.9	3.28	11.93
IDLE HC,PPM/HEXANE				90.	HOT TRANS	2.08	16.11	616.4	5.86	13.69
IDLE CO,PCT (MEAS)				.09						
IDLE CO,PCT (SPEC)				1.20	1975 FTP	2.18	25.24	676.9	4.49	12.27
OTHER TESTS: MODAL, THE 5 SHORT CYCLE TESTS										

EMISSION RESULTS IN GRAMS PER MILE
FUEL ECONOMY IN MILES PER GALLON

APPENDIX E

LISTING OF FEDERAL TEST PROCEDURE RESULTS ON INDIVIDUAL VEHICLES

ST. LOUIS

VEHICLE NUMBER	YEAR	MAKE	MODEL	CID	TEST TYPE	HC	CO	CO2	NOXC	FUEL ECONOMY
3115	1973	CHEV	IMPA	350	COLD TRANS	3.83	56.30	647.9	2.90	11.86
					COLD STAB	1.47	44.57	672.1	1.41	11.88
IDLE HC,PPM/HEXANE				100.	HOT TRANS	2.07	29.58	586.5	3.09	13.88
IDLE CO,PCT (MEAS)				1.85						
IDLE CO,PCT (SPEC)				1.20	1975 FTP	2.12	42.89	643.8	2.17	12.36
OTHER TESTS: MODAL, THE 5 SHORT CYCLE TESTS										
3116	1973	DODG	DART	225	COLD TRANS	2.29	24.98	470.6	8.96	17.16
					COLD STAB	1.49	3.98	444.8	4.27	19.47
IDLE HC,PPM/HEXANE				85.	HOT TRANS	1.72	7.34	411.3	8.57	20.72
IDLE CO,PCT (MEAS)				.05						
IDLE CO,PCT (SPEC)				.50	1975 FTP	1.72	9.22	441.0	6.41	19.26
OTHER TESTS: MODAL, THE 5 SHORT CYCLE TESTS										
3117	1973	FORD	PINT	122	COLD TRANS	3.30	51.60	479.5	4.06	15.54
					COLD STAB	2.27	61.78	397.6	2.87	17.68
IDLE HC,PPM/HEXANE				25.	HOT TRANS	1.61	29.04	390.4	3.99	20.12
IDLE CO,PCT (MEAS)				.55						
IDLE CO,PCT (SPEC)				1.50	1975 FTP	2.30	50.75	412.5	3.42	17.77
OTHER TESTS: MODAL, THE 5 SHORT CYCLE TESTS										
3118	1973	FORD	TORI	351	COLD TRANS	5.65	85.01	633.4	4.02	11.31
					COLD STAB	5.99	134.86	633.4	1.22	10.27
IDLE HC,PPM/HEXANE				295.	HOT TRANS	4.58	69.65	549.0	3.99	13.19
IDLE CO,PCT (MEAS)				5.40						
IDLE CO,PCT (SPEC)				99.99	1975 FTP	5.54	106.81	610.4	2.55	11.15
OTHER TESTS: MODAL, THE 5 SHORT CYCLE TESTS										
3119	1973	FORD	MUST	302	COLD TRANS	5.70	82.95	624.6	2.91	11.48
					COLD STAB	4.52	80.44	658.6	1.86	11.10
IDLE HC,PPM/HEXANE				305.	HOT TRANS	4.19	51.53	562.2	3.09	13.52
IDLE CO,PCT (MEAS)				4.90						
IDLE CO,PCT (SPEC)				.40	1975 FTP	4.68	73.07	625.3	2.41	11.76
OTHER TESTS: MODAL, THE 5 SHORT CYCLE TESTS										

EMISSION RESULTS IN GRAMS PER MILE
FUEL ECONOMY IN MILES PER GALLON

APPENDIX E

LISTING OF FEDERAL TEST PROCEDURE RESULTS ON INDIVIDUAL VEHICLES

ST. LOUIS

VEHICLE NUMBER	YEAR	MAKE	MODEL	CID	TEST TYPE	HC	CO	CO2	NOXC	FUEL ECONOMY
3120	1973	FORD	TORI	351	COLD TRANS	3.45	72.40	675.8	3.86	11.09
					COLD STAB	2.02	51.54	739.4	1.85	10.73
IDLE HC,PPM/HEXANE				29.	HOT TRANS	2.31	31.58	608.0	4.17	13.35
IDLE CO,PCT (MEAS)				2.90						
IDLE CO,PCT (SPEC)				.50	1975 FTP	2.40	50.39	690.5	2.90	11.42
OTHER TESTS: MODAL, THE 5 SHORT CYCLE TESTS										
3121	1973	FORD	STAW	400	COLD TRANS	5.26	134.56	648.6	6.22	10.12
					COLD STAB	3.27	96.31	721.2	3.65	10.05
IDLE HC,PPM/HEXANE				155.	HOT TRANS	3.54	47.67	611.6	8.32	12.72
IDLE CO,PCT (MEAS)				3.20						
IDLE CO,PCT (SPEC)				.30	1975 FTP	3.75	90.91	676.4	5.45	10.68
OTHER TESTS: MODAL, THE 5 SHORT CYCLE TESTS										
3122	1973	MERC	MONG	400	COLD TRANS	5.13	64.43	857.7	4.31	9.10
					COLD STAB	2.98	83.78	790.2	2.64	9.53
IDLE HC,PPM/HEXANE				180.	HOT TRANS	3.07	40.84	744.7	4.15	10.84
IDLE CO,PCT (MEAS)				4.90						
IDLE CO,PCT (SPEC)				.30	1975 FTP	3.45	68.08	791.7	3.39	9.76
OTHER TESTS: MODAL, THE 5 SHORT CYCLE TESTS										
3123	1973	OLDS	TORO	455	COLD TRANS	5.52	75.60	756.3	8.24	9.94
					COLD STAB	2.32	30.55	775.8	4.00	10.68
IDLE HC,PPM/HEXANE				38.	HOT TRANS	2.88	34.28	664.8	7.43	12.19
IDLE CO,PCT (MEAS)				.15						
IDLE CO,PCT (SPEC)				.30	1975 FTP	3.13	40.84	741.5	5.81	10.88
OTHER TESTS: MODAL, THE 5 SHORT CYCLE TESTS										
3124	1973	OLDS	CUTL	350	COLD TRANS	2.99	39.83	700.1	2.51	11.49
					COLD STAB	2.88	48.80	634.6	1.74	12.32
IDLE HC,PPM/HEXANE				210.	HOT TRANS	2.19	26.44	612.7	2.40	13.42
IDLE CO,PCT (MEAS)				4.50						
IDLE CO,PCT (SPEC)				.30	1975 FTP	2.71	40.86	642.1	2.08	12.42
OTHER TESTS: MODAL, THE 5 SHORT CYCLE TESTS										

EMISSION RESULTS IN GRAMS PER MILE
FUEL ECONOMY IN MILES PER GALLON

APPENDIX E

LISTING OF FEDERAL TEST PROCEDURE RESULTS ON INDIVIDUAL VEHICLES

ST. LOUIS

VEHICLE NUMBER	YEAR	MAKE	MODEL	CID	TEST TYPE	HC	CO	CO2	NOXC	FUEL ECONOMY
3125	1973	PLYM	SATE	318	COLD TRANS	4.31	63.66	596.0	4.03	12.51
					COLD STAB	3.56	54.00	593.8	2.57	12.86
IDLE HC,PPM/HEXANE				158.	HOT TRANS	3.28	30.89	523.1	4.46	15.25
IDLE CO,PCT (MEAS)				2.40						
IDLE CO,PCT (SPEC)				.50	1975 FTP	3.64	49.69	574.9	3.39	13.36
OTHER TESTS: MODAL, THE 5 SHORT CYCLE TESTS										
3126	1973	PLYM	VALI	318	COLD TRANS	5.43	86.99	524.7	2.29	13.08
					COLD STAB	3.40	59.73	550.4	1.66	13.55
IDLE HC,PPM/HEXANE				77.	HOT TRANS	2.95	36.04	486.2	2.70	16.07
IDLE CO,PCT (MEAS)				1.20						
IDLE CO,PCT (SPEC)				.50	1975 FTP	3.69	58.88	527.6	2.07	14.05
OTHER TESTS: MODAL, THE 5 SHORT CYCLE TESTS										
3127	1973	PONT	GRNV	400	COLD TRANS	5.62	68.50	865.1	2.20	8.96
					COLD STAB	6.64	84.60	683.3	3.75	10.60
IDLE HC,PPM/HEXANE				180.	HOT TRANS	5.16	38.53	657.8	7.19	12.08
IDLE CO,PCT (MEAS)				1.70						
IDLE CO,PCT (SPEC)				.20	1975 FTP	6.03	68.72	713.7	4.37	10.56
OTHER TESTS: MODAL, THE 5 SHORT CYCLE TESTS										
3128	1973	PONT	LEMA	350	COLD TRANS	5.24	186.67	677.7	3.44	8.99
					COLD STAB	2.91	7.20	760.8	5.05	11.36
IDLE HC,PPM/HEXANE				195.	HOT TRANS	2.90	10.40	626.0	8.76	13.62
IDLE CO,PCT (MEAS)				.07						
IDLE CO,PCT (SPEC)				.20	1975 FTP	3.39	45.01	706.9	5.73	11.26
OTHER TESTS: MODAL, THE 5 SHORT CYCLE TESTS										
3129	1973	DATS	STAW	97	COLD TRANS	4.61	56.10	360.2	4.71	19.17
					COLD STAB	5.22	55.83	356.0	2.37	19.28
IDLE HC,PPM/HEXANE				187.	HOT TRANS	3.84	31.87	318.3	4.86	23.32
IDLE CO,PCT (MEAS)				2.85						
IDLE CO,PCT (SPEC)				1.50	1975 FTP	4.72	49.35	346.6	3.53	20.21
OTHER TESTS: MODAL, THE 5 SHORT CYCLE TESTS										

EMISSION RESULTS IN GRAMS PER MILE
FUEL ECONOMY IN MILES PER GALLON

APPENDIX E

LISTING OF FEDERAL TEST PROCEDURE RESULTS ON INDIVIDUAL VEHICLES

ST. LOUIS

VEHICLE NUMBER	YEAR	MAKE	MODEL	CID	TEST TYPE	HC	CO	CO2	NOXC	FUEL ECONOMY
3130	1973	OPEL	STAW	116	COLD TRANS	3.51	84.14	359.3	3.24	17.66
					COLD STAB	2.62	99.62	283.0	.94	19.82
IDLE HC,PPM/HEXANE				31.	HOT TRANS	2.13	65.34	268.8	2.18	23.46
IDLE CO,PCT (MEAS)				.65						
IDLE CO,PCT (SPEC)				99.99	1975 FTP	2.67	87.08	294.8	1.75	20.16
OTHER TESTS: MODAL, THE 5 SHORT CYCLE TESTS										
3131	1973	TOYO	CARI	97	COLD TRANS	4.77	85.34	358.7	4.06	17.47
					COLD STAB	2.47	53.04	320.0	1.54	21.59
IDLE HC,PPM/HEXANE				122.	HOT TRANS	2.67	44.30	312.9	3.70	22.70
IDLE CO,PCT (MEAS)				1.90						
IDLE CO,PCT (SPEC)				3.00	1975 FTP	3.00	57.30	326.0	2.65	20.85
OTHER TESTS: MODAL, THE 5 SHORT CYCLE TESTS										
3132	1973	VOLK	SEDA	103	COLD TRANS	10.32	49.90	320.1	3.25	20.58
					COLD STAB	5.50	56.63	317.6	1.33	20.93
IDLE HC,PPM/HEXANE				45.	HOT TRANS	7.74	38.46	290.8	2.53	23.62
IDLE CO,PCT (MEAS)				.45						
IDLE CO,PCT (SPEC)				1.50	1975 FTP	7.10	50.29	310.8	2.05	21.52
OTHER TESTS: MODAL, THE 5 SHORT CYCLE TESTS										
3133	1973	VOLK	SEDA	97	COLD TRANS	4.36	43.75	285.0	4.03	24.15
					COLD STAB	4.39	51.86	299.5	2.04	22.47
IDLE HC,PPM/HEXANE				230.	HOT TRANS	3.27	32.73	264.6	3.86	27.20
IDLE CO,PCT (MEAS)				3.40						
IDLE CO,PCT (SPEC)				2.00	1975 FTP	4.08	44.97	287.0	2.95	23.95
OTHER TESTS: MODAL, THE 5 SHORT CYCLE TESTS										
3362	1973	BUIC	CNTY	350	COLD TRANS	3.90	55.10	731.5	3.97	10.69
					COLD STAB	2.40	44.04	691.2	1.90	11.56
IDLE HC,PPM/HEXANE				90.	HOT TRANS	3.10	25.11	609.8	3.57	13.47
IDLE CO,PCT (MEAS)				1.70						
IDLE CO,PCT (SPEC)				.60	1975 FTP	2.90	41.15	677.3	2.78	11.82
OTHER TESTS: THE 5 SHORT CYCLE TESTS										

EMISSION RESULTS IN GRAMS PER MILE
FUEL ECONOMY IN MILES PER GALLON

APPENDIX E

LISTING OF FEDERAL TEST PROCEDURE RESULTS ON INDIVIDUAL VEHICLES

ST. LOUIS

VEHICLE NUMBER	YEAR	MAKE	MODEL	CID	TEST TYPE	HC	CO	CO2	NOXC	FUEL ECONOMY
3363	1973	BUIC	RIVE	455	COLD TRANS	4.72	34.69	1015.8	1.56	8.18
					COLD STAB	6.01	16.79	1007.8	2.73	8.43
IDLE HC,PPM/HEXANE				70.	HOT TRANS	3.95	10.11	842.9	3.60	10.19
IDLE CO,PCT (MEAS)				.30						
IDLE CO,PCT (SPEC)				1.00	1975 FTP	5.19	18.65	964.5	2.72	8.79
OTHER TESTS: THE 5 SHORT CYCLE TESTS										
3364	1973	CHEV	STAW	400	COLD TRANS	4.74	67.44	747.9	7.45	10.21
					COLD STAB	4.66	107.04	732.7	2.83	9.69
IDLE HC,PPM/HEXANE				275.	HOT TRANS	3.48	62.20	640.9	5.10	11.84
IDLE CO,PCT (MEAS)				3.30						
IDLE CO,PCT (SPEC)				.60	1975 FTP	4.36	86.66	710.8	4.40	10.31
OTHER TESTS: THE 5 SHORT CYCLE TESTS										
3365	1973	CHEV	VEGA	140	COLD TRANS	3.99	45.54	428.7	4.85	17.30
					COLD STAB	3.35	56.48	369.1	2.79	18.94
IDLE HC,PPM/HEXANE				320.	HOT TRANS	2.72	34.86	355.6	4.45	21.18
IDLE CO,PCT (MEAS)				4.10						
IDLE CO,PCT (SPEC)				1.20	1975 FTP	3.31	48.33	377.7	3.66	19.12
OTHER TESTS: THE 5 SHORT CYCLE TESTS										
3366	1973	CHEV	NOVA	250	COLD TRANS	2.83	76.58	492.8	4.06	14.27
					COLD STAB	1.09	19.90	481.2	2.42	17.20
IDLE HC,PPM/HEXANE				101.	HOT TRANS	1.62	17.81	412.1	4.15	19.93
IDLE CO,PCT (MEAS)				1.70						
IDLE CO,PCT (SPEC)				1.20	1975 FTP	1.59	30.99	464.8	3.23	17.12
OTHER TESTS: THE 5 SHORT CYCLE TESTS										
3367	1973	CHEV	IMPA	350	COLD TRANS	4.43	85.38	660.8	5.78	10.97
					COLD STAB	2.14	46.56	671.7	3.79	11.81
IDLE HC,PPM/HEXANE				140.	HOT TRANS	2.27	37.57	583.3	6.31	13.66
IDLE CO,PCT (MEAS)				1.80						
IDLE CO,PCT (SPEC)				1.20	1975 FTP	2.65	52.10	645.3	4.89	12.07
OTHER TESTS: THE 5 SHORT CYCLE TESTS										

EMISSION RESULTS IN GRAMS PER MILE
FUEL ECONOMY IN MILES PER GALLON

APPENDIX E

LISTING OF FEDERAL TEST PROCEDURE RESULTS ON INDIVIDUAL VEHICLES

ST. LOUIS

VEHICLE NUMBER	YEAR	MAKE	MODEL	CID	TEST TYPE	HC	CO	CO2	NOXC	FUEL ECONOMY
3368	1973	CHEV	CAMA	307	COLD TRANS	6.96	68.02	595.4	3.89	12.25
					COLD STAB	2.18	48.17	577.7	2.04	13.44
IDLE HC,PPM/HEXANE				35.	HOT TRANS	3.33	30.93	493.1	4.03	16.07
IDLE CO,PCT (MEAS)				.75						
IDLE CO,PCT (SPEC)				1.20	1975 FTP	3.48	47.55	558.3	2.96	13.78
OTHER TESTS: THE 5 SHORT CYCLE TESTS										
3369	1973	CHEV	STAW	454	COLD TRANS	5.25	67.13	824.8	4.84	9.37
					COLD STAB	4.11	77.50	839.3	2.20	9.11
IDLE HC,PPM/HEXANE				580.	HOT TRANS	3.18	58.50	719.9	3.73	10.80
IDLE CO,PCT (MEAS)				3.15						
IDLE CO,PCT (SPEC)				1.20	1975 FTP	4.09	70.18	803.7	3.16	9.57
OTHER TESTS: THE 5 SHORT CYCLE TESTS										
3370	1973	CHRY	NEWP	400	COLD TRANS	5.04	71.82	644.6	5.25	11.48
					COLD STAB	4.36	82.58	620.3	2.78	11.62
IDLE HC,PPM/HEXANE				245.	HOT TRANS	3.53	46.78	596.7	5.87	13.02
IDLE CO,PCT (MEAS)				4.65						
IDLE CO,PCT (SPEC)				.50	1975 FTP	4.28	70.60	618.9	4.13	11.94
OTHER TESTS: THE 5 SHORT CYCLE TESTS										
3371	1973	DODG	CHAR	318	COLD TRANS	5.32	68.74	613.8	6.24	12.01
					COLD STAB	3.80	49.62	625.1	2.95	12.41
IDLE HC,PPM/HEXANE				165.	HOT TRANS	3.91	38.05	540.7	5.04	14.48
IDLE CO,PCT (MEAS)				2.20						
IDLE CO,PCT (SPEC)				.50	1975 FTP	4.15	50.40	599.7	4.20	12.82
OTHER TESTS: THE 5 SHORT CYCLE TESTS										
3372	1973	DODG	STAW	360	COLD TRANS	9.07	167.56	853.6	6.90	7.75
					COLD STAB	4.68	102.12	757.6	4.26	9.51
IDLE HC,PPM/HEXANE				200.	HOT TRANS	4.89	81.53	672.0	6.66	10.88
IDLE CO,PCT (MEAS)				1.90						
IDLE CO,PCT (SPEC)				.50	1975 FTP	5.64	109.97	754.0	5.46	9.39
OTHER TESTS: THE 5 SHORT CYCLE TESTS										

EMISSION RESULTS IN GRAMS PER MILE
FUEL ECONOMY IN MILES PER GALLON

APPENDIX E

LISTING OF FEDERAL TEST PROCEDURE RESULTS ON INDIVIDUAL VEHICLES

ST. LOUIS

VEHICLE NUMBER	YEAR	MAKE	MODEL	CID	TEST TYPE	HC	CO	CO2	NOXC	FUEL ECONOMY
3373	1973	FORD	PINT	122	COLD TRANS	7.67	91.46	304.1	3.33	18.80
					COLD STAB	5.85	82.04	294.0	1.62	20.10
IDLE HC,PPM/HEXANE				410.	HOT TRANS	4.10	41.98	279.8	3.57	24.74
IDLE CO,PCT (MEAS)				4.70						
IDLE CO,PCT (SPEC)				1.50	1975 FTP	5.75	73.05	292.2	2.50	20.87
OTHER TESTS: THE 5 SHORT CYCLE TESTS										
3374	1973	FORD	TORI	351	COLD TRANS	3.38	38.78	625.3	5.05	12.73
					COLD STAB	2.93	33.96	660.1	1.46	12.28
IDLE HC,PPM/HEXANE				160.	HOT TRANS	2.48	15.56	552.9	4.70	15.17
IDLE CO,PCT (MEAS)				.70						
IDLE CO,PCT (SPEC)				.50	1975 FTP	2.90	29.93	623.7	3.08	13.05
OTHER TESTS: THE 5 SHORT CYCLE TESTS										
3375	1973	FORD	STAW	400	COLD TRANS	6.09	47.12	585.9	4.07	13.07
					COLD STAB	3.44	57.30	579.4	2.71	13.04
IDLE HC,PPM/HEXANE				48.	HOT TRANS	5.23	28.61	506.8	4.69	15.62
IDLE CO,PCT (MEAS)				.49						
IDLE CO,PCT (SPEC)				.30	1975 FTP	4.48	47.38	561.0	3.53	13.66
OTHER TESTS: THE 5 SHORT CYCLE TESTS										
3376	1973	FORD	STAW	400	COLD TRANS	8.80	21.96	793.6	8.02	10.37
					COLD STAB	3.37	6.92	838.7	6.02	10.32
IDLE HC,PPM/HEXANE				45.	HOT TRANS	4.94	10.17	661.7	9.44	12.80
IDLE CO,PCT (MEAS)				.06						
IDLE CO,PCT (SPEC)				.30	1975 FTP	4.92	10.90	781.1	7.36	10.91
OTHER TESTS: THE 5 SHORT CYCLE TESTS										
3377	1973	MERC	MONG	302	COLD TRANS	4.63	72.83	690.3	3.96	10.83
					COLD STAB	2.83	17.59	742.9	2.69	11.39
IDLE HC,PPM/HEXANE				123.	HOT TRANS	3.14	20.53	641.9	4.28	12.97
IDLE CO,PCT (MEAS)				.28						
IDLE CO,PCT (SPEC)				.40	1975 FTP	3.29	29.76	704.5	3.38	11.65
OTHER TESTS: THE 5 SHORT CYCLE TESTS										

EMISSION RESULTS IN GRAMS PER MILE
FUEL ECONOMY IN MILES PER GALLON

APPENDIX E

LISTING OF FEDERAL TEST PROCEDURE RESULTS ON INDIVIDUAL VEHICLES

ST. LOUIS

VEHICLE NUMBER	YEAR	MAKE	MODEL	CID	TEST TYPE	HC	CO	CO2	NOXC	FUEL ECONOMY
3378	1973	OLDS	DELT	350	COLD TRANS	4.44	79.00	723.0	6.43	10.31
					COLD STAB	3.81	32.59	700.7	3.58	11.62
IDLE HC,PPM/HEXANE				98.	HOT TRANS	4.86	32.14	623.8	6.14	12.87
IDLE CO,PCT (MEAS)				.19						
IDLE CO,PCT (SPEC)				.50	1975 FTP	4.22	42.02	684.3	4.87	11.62
OTHER TESTS: THE 5 SHORT CYCLE TESTS										
3379	1973	OLDS	NNTY	455	COLD TRANS	1.99	32.82	874.3	5.21	9.52
					COLD STAB	1.48	10.08	911.2	3.16	9.53
IDLE HC,PPM/HEXANE				73.	HOT TRANS	1.85	9.16	755.6	4.94	11.44
IDLE CO,PCT (MEAS)				.11						
IDLE CO,PCT (SPEC)				.30	1975 FTP	1.69	14.51	861.2	4.07	9.98
OTHER TESTS: THE 5 SHORT CYCLE TESTS										
3380	1973	PLYM	FRY3	360	COLD TRANS	3.80	69.17	571.7	6.44	12.82
					COLD STAB	4.54	110.97	548.6	2.54	12.04
IDLE HC,PPM/HEXANE				265.	HOT TRANS	3.49	58.33	495.6	6.05	14.83
IDLE CO,PCT (MEAS)				5.10						
IDLE CO,PCT (SPEC)				1.00	1975 FTP	4.10	88.01	538.9	4.30	12.86
OTHER TESTS: THE 5 SHORT CYCLE TESTS										
3381	1973	PONT	VENT	350	COLD TRANS	7.46	95.35	697.3	2.83	10.19
					COLD STAB	3.70	55.22	666.5	1.95	11.60
IDLE HC,PPM/HEXANE				275.	HOT TRANS	3.45	32.34	567.0	5.75	14.12
IDLE CO,PCT (MEAS)				3.70						
IDLE CO,PCT (SPEC)				.20	1975 FTP	4.41	57.24	645.7	3.17	11.84
OTHER TESTS: THE 5 SHORT CYCLE TESTS										
3382	1973	PONT	GRNV	455	COLD TRANS	3.82	60.93	620.2	3.40	12.19
					COLD STAB	2.20	12.36	689.1	2.09	12.40
IDLE HC,PPM/HEXANE				150.	HOT TRANS	2.08	10.76	553.6	3.45	15.38
IDLE CO,PCT (MEAS)				.06						
IDLE CO,PCT (SPEC)				.60	1975 FTP	2.50	21.92	637.9	2.73	13.05
OTHER TESTS: THE 5 SHORT CYCLE TESTS										

EMISSION RESULTS IN GRAMS PER MILE
FUEL ECONOMY IN MILES PER GALLON

APPENDIX E

LISTING OF FEDERAL TEST PROCEDURE RESULTS ON INDIVIDUAL VEHICLES

ST. LOUIS

VEHICLE NUMBER	YEAR	MAKE	MODEL	CID	TEST TYPE	HC	CO	CO2	NOXC	FUEL ECONOMY
3383	1973	MERC	CAPR	122	COLD TRANS	3.01	35.38	304.6	2.34	24.00
					COLD STAB	2.02	15.93	324.3	1.41	24.95
IDLE HC,PPM/HEXANE				125.	HOT TRANS	1.53	9.48	273.0	2.24	30.32
IDLE CO,PCT (MEAS)				1.10						
IDLE CO,PCT (SPEC)				1.50	1975 FTP	2.09	18.17	306.2	1.83	26.00
OTHER TESTS: THE 5 SHORT CYCLE TESTS										
3384	1973	MAZD	RX3	70	COLD TRANS	5.28	33.09	535.7	1.07	14.68
					COLD STAB	1.93	19.46	644.2	.52	13.04
IDLE HC,PPM/HEXANE				30.	HOT TRANS	4.52	31.22	449.5	1.39	17.30
IDLE CO,PCT (MEAS)				.03						
IDLE CO,PCT (SPEC)				3.00	1975 FTP	3.33	25.48	568.8	.87	14.33
OTHER TESTS: THE 5 SHORT CYCLE TESTS										
2134	1972	AMC	MATA	258	COLD TRANS	3.51	29.89	507.8	9.65	15.68
					COLD STAB	3.18	23.55	472.4	6.04	17.09
IDLE HC,PPM/HEXANE				62.	HOT TRANS	3.13	12.37	457.4	9.82	18.23
IDLE CO,PCT (MEAS)				.70						
IDLE CO,PCT (SPEC)				1.30	1975 FTP	3.23	21.80	475.6	7.81	17.06
OTHER TESTS: MODAL, THE 5 SHORT CYCLE TESTS										
2135	1972	BUIC	ELEC	455	COLD TRANS	3.79	44.18	773.0	11.82	10.39
					COLD STAB	2.24	38.54	763.3	6.06	10.68
IDLE HC,PPM/HEXANE				55.	HOT TRANS	3.24	23.93	635.8	11.51	12.98
IDLE CO,PCT (MEAS)				.86						
IDLE CO,PCT (SPEC)				.80	1975 FTP	2.83	35.72	730.5	8.73	11.16
OTHER TESTS: MODAL, THE 5 SHORT CYCLE TESTS										
2136	1972	CADI	CALA	472	COLD TRANS	2.86	95.01	841.8	5.50	8.87
					COLD STAB	1.06	25.62	875.6	2.78	9.66
IDLE HC,PPM/HEXANE				82.	HOT TRANS	2.00	20.85	736.1	6.79	11.45
IDLE CO,PCT (MEAS)				.90						
IDLE CO,PCT (SPEC)				1.00	1975 FTP	1.69	38.60	830.6	4.44	9.90
OTHER TESTS: MODAL, THE 5 SHORT CYCLE TESTS										

EMISSION RESULTS IN GRAMS PER MILE
FUEL ECONOMY IN MILES PER GALLON

APPENDIX E

LISTING OF FEDERAL TEST PROCEDURE RESULTS ON INDIVIDUAL VEHICLES

ST. LOUIS

VEHICLE NUMBER	YEAR	MAKE	MODEL	CID	TEST TYPE	HC	CO	CO2	NOXC	FUEL ECONOMY
2137	1972	CHEV	VEGA	140	COLD TRANS	4.13	49.40	328.8	3.02	21.16
					COLD STAB	3.90	38.42	353.9	1.88	20.80
IDLE HC,PPM/HEXANE				138.	HOT TRANS	2.94	28.30	293.3	3.29	25.57
IDLE CO,PCT (MEAS)				1.20						
IDLE CO,PCT (SPEC)				1.20	1975 FTP	3.68	37.92	332.2	2.50	22.00
OTHER TESTS: MODAL, THE 5 SHORT CYCLE TESTS										
2138	1972	CHEV	STAW	350	COLD TRANS	6.07	123.62	600.1	3.41	10.91
					COLD STAB	3.44	60.04	633.7	2.12	12.01
IDLE HC,PPM/HEXANE				275.	HOT TRANS	3.44	40.20	549.1	4.57	14.24
IDLE CO,PCT (MEAS)				3.65						
IDLE CO,PCT (SPEC)				.60	1975 FTP	3.98	67.71	603.7	3.05	12.28
OTHER TESTS: MODAL, THE 5 SHORT CYCLE TESTS										
2139	1972	CHEV	CHEL	350	COLD TRANS	4.05	62.95	575.3	5.44	12.92
					COLD STAB	3.47	81.71	560.8	2.27	12.68
IDLE HC,PPM/HEXANE				107.	HOT TRANS	2.90	42.50	498.5	5.50	15.45
IDLE CO,PCT (MEAS)				1.95						
IDLE CO,PCT (SPEC)				.60	1975 FTP	3.43	67.15	546.8	3.80	13.38
OTHER TESTS: MODAL, THE 5 SHORT CYCLE TESTS										
2140	1972	CHEV	CHEL	307	COLD TRANS	4.71	50.15	527.1	4.89	14.30
					COLD STAB	3.52	54.87	504.9	2.16	14.74
IDLE HC,PPM/HEXANE				410.	HOT TRANS	3.27	30.93	471.8	4.60	16.72
IDLE CO,PCT (MEAS)				1.20						
IDLE CO,PCT (SPEC)				3.95	1975 FTP	3.70	47.36	500.4	3.39	15.13
OTHER TESTS: MODAL, THE 5 SHORT CYCLE TESTS										
2141	1972	CHEV	STAW	350	COLD TRANS	6.41	105.27	671.5	6.73	10.35
					COLD STAB	4.26	73.83	623.9	3.82	11.78
IDLE HC,PPM/HEXANE				250.	HOT TRANS	3.86	50.24	582.2	7.21	13.18
IDLE CO,PCT (MEAS)				3.40						
IDLE CO,PCT (SPEC)				.60	1975 FTP	4.59	73.86	622.3	5.34	11.79
OTHER TESTS: MODAL, THE 5 SHORT CYCLE TESTS										

EMISSION RESULTS IN GRAMS PER MILE
FUEL ECONOMY IN MILES PER GALLON

APPENDIX E

LISTING OF FEDERAL TEST PROCEDURE RESULTS ON INDIVIDUAL VEHICLES

ST. LOUIS

VEHICLE NUMBER	YEAR	MAKE	MODEL	CID	TEST TYPE	HC	CO	CO2	NOXC	FUEL ECONOMY
2142	1972	CHEV	CAPR	400	COLD TRANS	5.12	59.64	690.0	9.60	11.10
					COLD STAB	4.81	85.55	642.7	5.21	11.20
IDLE HC,PPM/HEXANE				180.	HOT TRANS	4.06	43.33	591.3	8.89	13.20
IDLE CO,PCT (MEAS)				4.55						
IDLE CO,PCT (SPEC)				.80	1975 FTP	4.67	68.70	638.4	7.12	11.66
OTHER TESTS: MODAL, THE 5 SHORT CYCLE TESTS										
2143	1972	DODG	CHAR	318	COLD TRANS	4.52	47.76	543.3	5.74	14.03
					COLD STAB	2.95	18.87	558.6	3.52	14.85
IDLE HC,PPM/HEXANE				43.	HOT TRANS	3.81	16.11	492.2	6.62	16.76
IDLE CO,PCT (MEAS)				.11						
IDLE CO,PCT (SPEC)				.50	1975 FTP	3.51	24.06	537.3	4.82	15.14
OTHER TESTS: MODAL, THE 5 SHORT CYCLE TESTS										
2144	1972	FORD	PINT	122	COLD TRANS	7.61	51.14	334.6	7.24	20.21
					COLD STAB	7.73	33.61	350.2	5.80	20.76
IDLE HC,PPM/HEXANE				220.	HOT TRANS	5.47	29.53	323.5	8.01	22.92
IDLE CO,PCT (MEAS)				1.75						
IDLE CO,PCT (SPEC)				1.50	1975 FTP	7.09	36.11	339.7	6.70	21.19
OTHER TESTS: MODAL, THE 5 SHORT CYCLE TESTS										
2145	1972	FORD	TORI	351	COLD TRANS	4.58	63.24	578.4	6.81	12.82
					COLD STAB	2.79	63.43	615.6	3.36	12.26
IDLE HC,PPM/HEXANE				195.	HOT TRANS	4.52	43.26	514.9	7.72	14.86
IDLE CO,PCT (MEAS)				5.10						
IDLE CO,PCT (SPEC)				.30	1975 FTP	3.63	57.89	580.5	5.26	13.00
OTHER TESTS: MODAL, THE 5 SHORT CYCLE TESTS										
2146	1972	FORD	MAVE	200	COLD TRANS	3.75	34.55	415.9	10.81	18.41
					COLD STAB	3.00	39.45	366.8	6.33	20.25
IDLE HC,PPM/HEXANE				130.	HOT TRANS	3.34	21.92	326.9	9.35	23.86
IDLE CO,PCT (MEAS)				2.15						
IDLE CO,PCT (SPEC)				1.20	1975 FTP	3.25	33.66	366.0	8.07	20.68
OTHER TESTS: MODAL, THE 5 SHORT CYCLE TESTS										

EMISSION RESULTS IN GRAMS PER MILE
FUEL ECONOMY IN MILES PER GALLON

APPENDIX E

LISTING OF FEDERAL TEST PROCEDURE RESULTS ON INDIVIDUAL VEHICLES

ST. LOUIS

VEHICLE NUMBER	YEAR	MAKE	MODEL	CID	TEST TYPE	HC	CO	CO2	NOXC	FUEL ECONOMY
2147	1972	FORD	STAW	400	COLD TRANS	39.50	134.26	682.7	4.28	8.71
					COLD STAB	3.97	114.48	704.0	2.92	9.90
IDLE HC,PPM/HEXANE				180.	HOT TRANS	3.83	63.56	622.2	5.48	12.09
IDLE CO,PCT (MEAS)				4.10						
IDLE CO,PCT (SPEC)				.30	1975 FTP	11.25	104.66	677.3	3.90	10.12
OTHER TESTS: MODAL, THE 5 SHORT CYCLE TESTS										
2148	1972	FORD	LTD	400	COLD TRANS	4.02	73.29	743.6	8.65	10.18
					COLD STAB	3.69	92.00	664.4	3.64	10.81
IDLE HC,PPM/HEXANE				145.	HOT TRANS	3.53	53.43	590.9	7.04	12.94
IDLE CO,PCT (MEAS)				3.80						
IDLE CO,PCT (SPEC)				.30	1975 FTP	3.71	77.63	660.7	5.60	11.17
OTHER TESTS: MODAL, THE 5 SHORT CYCLE TESTS										
2149	1972	MERC	MONR	400	COLD TRANS	2.97	19.50	697.1	10.76	12.04
					COLD STAB	2.74	12.81	684.1	7.36	12.45
IDLE HC,PPM/HEXANE				115.	HOT TRANS	2.75	10.69	590.3	11.15	14.41
IDLE CO,PCT (MEAS)				.17						
IDLE CO,PCT (SPEC)				.30	1975 FTP	2.79	13.61	661.2	9.09	12.84
OTHER TESTS: MODAL, THE 5 SHORT CYCLE TESTS										
2150	1972	OLDS	CUTL	350	COLD TRANS	2.27	35.64	660.3	3.70	12.27
					COLD STAB	1.70	9.93	662.7	2.34	12.98
IDLE HC,PPM/HEXANE				75.	HOT TRANS	2.05	15.49	569.3	3.63	14.79
IDLE CO,PCT (MEAS)				.42						
IDLE CO,PCT (SPEC)				.30	1975 FTP	1.91	16.74	636.7	2.97	13.27
OTHER TESTS: MODAL, THE 5 SHORT CYCLE TESTS										
2151	1972	PLYM	DUST	225	COLD TRANS	4.40	115.01	382.6	5.24	15.37
					COLD STAB	3.04	68.80	351.4	3.68	18.92
IDLE HC,PPM/HEXANE				265.	HOT TRANS	3.19	52.55	339.9	6.03	20.52
IDLE CO,PCT (MEAS)				3.60						
IDLE CO,PCT (SPEC)				.50	1975 FTP	3.36	73.88	354.7	4.64	18.43
OTHER TESTS: MODAL, THE 5 SHORT CYCLE TESTS										

EMISSION RESULTS IN GRAMS PER MILE
FUEL ECONOMY IN MILES PER GALLON

APPENDIX E

LISTING OF FEDERAL TEST PROCEDURE RESULTS ON INDIVIDUAL VEHICLES

ST. LOUIS

VEHICLE NUMBER	YEAR	MAKE	MODEL	CID	TEST TYPE	HC	CO	CO2	NOXC	FUEL ECONOMY
2152	1972	PLYM	FRY3	360	COLD TRANS	6.32	96.23	590.3	6.51	11.65
					COLD STAB	6.45	136.54	521.9	4.02	11.73
IDLE HC,PPM/HEXANE				550.	HOT TRANS	5.34	81.27	492.1	6.78	13.94
IDLE CO,PCT (MEAS)				8.30						
IDLE CO,PCT (SPEC)				.50	1975 FTP	6.12	113.16	527.8	5.29	12.24
OTHER TESTS: MODAL, THE 5 SHORT CYCLE TESTS										
2153	1972	PONT	GRNV	400	COLD TRANS	4.00	32.70	805.2	8.13	10.21
					COLD STAB	2.74	49.12	813.8	2.89	9.87
IDLE HC,PPM/HEXANE				137.	HOT TRANS	3.19	21.38	703.2	7.93	11.88
IDLE CO,PCT (MEAS)				1.70						
IDLE CO,PCT (SPEC)				.80	1975 FTP	3.12	38.17	781.8	5.34	10.42
OTHER TESTS: MODAL, THE 5 SHORT CYCLE TESTS										
2154	1972	PONT	FIRE	350	COLD TRANS	3.40	42.80	690.6	4.72	11.55
					COLD STAB	2.98	49.23	750.4	1.86	10.60
IDLE HC,PPM/HEXANE				150.	HOT TRANS	2.73	29.51	663.5	4.68	12.35
IDLE CO,PCT (MEAS)				2.10						
IDLE CO,PCT (SPEC)				.60	1975 FTP	3.00	42.53	714.4	3.22	11.22
OTHER TESTS: MODAL, THE 5 SHORT CYCLE TESTS										
2155	1972	DATS	510	97	COLD TRANS	4.09	23.20	337.8	6.83	22.92
					COLD STAB	4.17	29.67	311.1	5.69	23.93
IDLE HC,PPM/HEXANE				115.	HOT TRANS	3.25	15.40	296.4	8.37	26.83
IDLE CO,PCT (MEAS)				2.30						
IDLE CO,PCT (SPEC)				2.00	1975 FTP	3.90	24.45	312.5	6.65	24.43
OTHER TESTS: MODAL, THE 5 SHORT CYCLE TESTS										
2156	1972	TOYO	CELI	120	COLD TRANS	5.70	60.35	291.8	5.39	21.93
					COLD STAB	6.75	102.17	262.7	2.00	19.96
IDLE HC,PPM/HEXANE				1300.	HOT TRANS	6.15	59.56	252.6	5.09	24.27
IDLE CO,PCT (MEAS)				5.90						
IDLE CO,PCT (SPEC)				99.99	1975 FTP	6.37	81.94	265.9	3.54	21.39
OTHER TESTS: MODAL, THE 5 SHORT CYCLE TESTS										

EMISSION RESULTS IN GRAMS PER MILE
FUEL ECONOMY IN MILES PER GALLON

APPENDIX E

LISTING OF FEDERAL TEST PROCEDURE RESULTS ON INDIVIDUAL VEHICLES

ST. LOUIS

VEHICLE NUMBER	YEAR	MAKE	MODEL	CID	TEST TYPE	HC	CO	CO2	NOXC	FUEL ECONOMY
2157	1972	VOLK	SEDA	97	COLD TRANS	4.23	66.79	285.2	2.89	21.99
					COLD STAB	4.85	88.72	294.4	1.24	19.76
IDLE HC,PPM/HEXANE			560.		HOT TRANS	3.39	49.52	266.1	2.64	25.03
IDLE CO,PCT (MEAS)			5.80							
IDLE CO,PCT (SPEC)			2.00		1975 FTP	4.32	73.51	284.8	1.96	21.44
OTHER TESTS: MODAL, THE 5 SHORT CYCLE TESTS										
2158	1972	VOLK	SEDA	97	COLD TRANS	5.63	58.49	283.5	3.54	22.57
					COLD STAB	5.83	78.49	279.1	1.31	21.09
IDLE HC,PPM/HEXANE			38.		HOT TRANS	5.71	49.00	258.7	2.87	25.08
IDLE CO,PCT (MEAS)			.55							
IDLE CO,PCT (SPEC)			99.99		1975 FTP	5.76	66.33	274.4	2.19	22.36
OTHER TESTS: MODAL, THE 5 SHORT CYCLE TESTS										
2385	1972	BUIC	STAW	350	COLD TRANS	4.85	72.37	756.4	2.18	10.02
					COLD STAB	3.07	38.25	746.0	3.69	10.88
IDLE HC,PPM/HEXANE			68.		HOT TRANS	3.03	25.82	664.2	5.35	12.42
IDLE CO,PCT (MEAS)			.47							
IDLE CO,PCT (SPEC)			.80		1975 FTP	3.42	41.88	725.8	3.83	11.06
OTHER TESTS: THE 5 SHORT CYCLE TESTS										
2386	1972	BUIC	LESA	350	COLD TRANS	5.96	64.01	681.6	8.29	11.08
					COLD STAB	5.32	50.02	598.8	5.37	12.78
IDLE HC,PPM/HEXANE			185.		HOT TRANS	4.72	30.70	555.0	8.24	14.36
IDLE CO,PCT (MEAS)			2.60							
IDLE CO,PCT (SPEC)			.80		1975 FTP	5.29	47.63	603.9	6.75	12.76
OTHER TESTS: THE 5 SHORT CYCLE TESTS										
2387	1972	CHEV	VEGA	140	COLD TRANS	4.65	81.51	314.6	4.56	19.41
					COLD STAB	3.16	55.28	300.2	3.09	22.35
IDLE HC,PPM/HEXANE			475.		HOT TRANS	2.87	38.77	292.1	4.75	24.51
IDLE CO,PCT (MEAS)			6.00							
IDLE CO,PCT (SPEC)			1.20		1975 FTP	3.39	56.17	301.0	3.84	22.19
OTHER TESTS: THE 5 SHORT CYCLE TESTS										

EMISSION RESULTS IN GRAMS PER MILE
FUEL ECONOMY IN MILES PER GALLON

APPENDIX E

LISTING OF FEDERAL TEST PROCEDURE RESULTS ON INDIVIDUAL VEHICLES

ST. LOUIS

VEHICLE NUMBER	YEAR	MAKE	MODEL	CID	TEST TYPE	HC	CO	CO2	NOXC	FUEL ECONOMY
2388	1972	CHEV	NOVA	250	COLD TRANS	3.00	17.74	572.3	8.09	14.56
					COLD STAB	1.53	12.62	555.5	3.11	15.30
IDLE HC,PPM/HEXANE				143.	HOT TRANS	2.01	8.66	477.7	6.07	17.83
IDLE CO,PCT (MEAS)				1.60						
IDLE CO,PCT (SPEC)				1.20	1975 FTP	1.97	12.60	537.7	4.94	15.74
OTHER TESTS: THE 5 SHORT CYCLE TESTS										
2389	1972	CHEV	MALI	350	COLD TRANS	3.82	52.04	633.3	4.15	12.20
					COLD STAB	2.24	37.75	667.3	1.90	12.10
IDLE HC,PPM/HEXANE				160.	HOT TRANS	2.55	24.85	570.1	3.83	14.38
IDLE CO,PCT (MEAS)				1.95						
IDLE CO,PCT (SPEC)				.60	1975 FTP	2.65	37.17	633.8	2.89	12.67
OTHER TESTS: THE 5 SHORT CYCLE TESTS										
2390	1972	CHEV	IMPA	350	COLD TRANS	5.15	63.89	695.1	6.22	10.93
					COLD STAB	3.25	38.23	733.1	3.25	11.05
IDLE HC,PPM/HEXANE				180.	HOT TRANS	3.21	27.84	621.5	6.52	13.14
IDLE CO,PCT (MEAS)				1.65						
IDLE CO,PCT (SPEC)				.60	1975 FTP	3.63	40.68	694.8	4.75	11.52
OTHER TESTS: THE 5 SHORT CYCLE TESTS										
2391	1972	CHEV	IMPA	400	COLD TRANS	3.48	70.70	723.7	3.62	10.49
					COLD STAB	2.39	53.58	784.6	2.35	10.13
IDLE HC,PPM/HEXANE				200.	HOT TRANS	2.93	52.20	663.8	3.29	11.75
IDLE CO,PCT (MEAS)				3.60						
IDLE CO,PCT (SPEC)				.60	1975 FTP	2.76	56.73	739.1	2.87	10.60
OTHER TESTS: THE 5 SHORT CYCLE TESTS										
2392	1972	CHRY	NEWP	400	COLD TRANS	16.05	186.32	567.1	4.00	9.74
					COLD STAB	23.11	304.69	525.5	2.18	8.24
IDLE HC,PPM/HEXANE				190.	HOT TRANS	12.94	186.14	488.3	3.88	10.80
IDLE CO,PCT (MEAS)				3.20						
IDLE CO,PCT (SPEC)				.50	1975 FTP	18.88	247.98	523.9	3.02	9.12
OTHER TESTS: THE 5 SHORT CYCLE TESTS										

EMISSION RESULTS IN GRAMS PER MILE
FUEL ECONOMY IN MILES PER GALLON

APPENDIX E

LISTING OF FEDERAL TEST PROCEDURE RESULTS ON INDIVIDUAL VEHICLES

ST. LOUIS

VEHICLE NUMBER	YEAR	MAKE	MODEL	CID	TEST TYPE	HC	CO	CO2	NOXC	FUEL ECONOMY
2393	1972	DODG	DEMO	225	COLD TRANS	4.97	88.97	399.2	7.59	16.00
					COLD STAB	3.72	69.76	358.3	4.50	18.50
IDLE HC,PPM/HEXANE				142.	HOT TRANS	3.98	40.52	360.4	7.56	20.32
IDLE CO,PCT (MEAS)				3.10						
IDLE CO,PCT (SPEC)				.50	1975 FTP	4.05	65.74	367.3	5.97	18.36
OTHER TESTS: THE 5 SHORT CYCLE TESTS										
2394	1972	FORD	PINT	122	COLD TRANS	3.09	59.92	393.8	6.36	17.83
					COLD STAB	2.62	46.70	341.5	4.69	20.97
IDLE HC,PPM/HEXANE				250.	HOT TRANS	2.03	30.77	347.5	7.12	22.06
IDLE CO,PCT (MEAS)				3.80						
IDLE CO,PCT (SPEC)				1.20	1975 FTP	2.56	45.08	353.9	5.70	20.50
OTHER TESTS: THE 5 SHORT CYCLE TESTS										
2395	1972	FORD	TORI	302	COLD TRANS	5.47	156.07	555.0	3.10	10.86
					COLD STAB	2.84	54.95	575.5	2.21	13.23
IDLE HC,PPM/HEXANE				330.	HOT TRANS	3.20	35.55	513.2	3.95	15.32
IDLE CO,PCT (MEAS)				4.75						
IDLE CO,PCT (SPEC)				.40	1975 FTP	3.48	70.47	554.3	2.87	13.13
OTHER TESTS: THE 5 SHORT CYCLE TESTS										
2396	1972	FORD	MUST	351	COLD TRANS	15.78	128.26	540.0	3.18	11.21
					COLD STAB	4.15	132.43	601.7	1.65	10.79
IDLE HC,PPM/HEXANE				260.	HOT TRANS	3.50	62.23	509.2	4.06	14.36
IDLE CO,PCT (MEAS)				7.00						
IDLE CO,PCT (SPEC)				.50	1975 FTP	6.37	112.42	563.7	2.63	11.67
OTHER TESTS: THE 5 SHORT CYCLE TESTS										
2397	1972	FORD	GALA	429	COLD TRANS	5.25	100.94	666.7	7.61	10.54
					COLD STAB	1.55	6.27	691.7	4.83	12.56
IDLE HC,PPM/HEXANE				85.	HOT TRANS	2.39	7.92	600.4	9.29	14.31
IDLE CO,PCT (MEAS)				.08						
IDLE CO,PCT (SPEC)				.30	1975 FTP	2.54	26.20	661.6	6.62	12.49
OTHER TESTS: THE 5 SHORT CYCLE TESTS										

EMISSION RESULTS IN GRAMS PER MILE
FUEL ECONOMY IN MILES PER GALLON

APPENDIX E

LISTING OF FEDERAL TEST PROCEDURE RESULTS ON INDIVIDUAL VEHICLES

ST. LOUIS

VEHICLE NUMBER	YEAR	MAKE	MODEL	CID	TEST TYPE	HC	CO	CO2	NOXC	FUEL ECONOMY
2398	1972	LINC	MRK4	460	COLD TRANS	6.91	163.84	729.1	4.48	8.80
					COLD STAB	3.84	62.99	750.7	3.82	10.30
IDLE HC,PPM/HEXANE				78.	HOT TRANS	2.87	33.26	674.8	6.32	12.06
IDLE CO,PCT (MEAS)				1.24						
IDLE CO,PCT (SPEC)				.60	1975 FTP	4.21	75.64	725.6	4.64	10.35
OTHER TESTS: THE 5 SHORT CYCLE TESTS										
2399	1972	MERC	MONG	302	COLD TRANS	7.95	138.48	616.7	6.09	10.33
					COLD STAB	3.87	58.24	655.4	2.98	11.69
IDLE HC,PPM/HEXANE				105.	HOT TRANS	4.70	32.33	591.5	8.11	13.50
IDLE CO,PCT (MEAS)				1.32						
IDLE CO,PCT (SPEC)				.40	1975 FTP	4.94	67.68	630.0	5.02	11.80
OTHER TESTS: THE 5 SHORT CYCLE TESTS										
2400	1972	OLDS	CUTL	350	COLD TRANS	3.10	27.84	619.9	6.34	13.18
					COLD STAB	2.23	17.24	623.3	2.88	13.50
IDLE HC,PPM/HEXANE				135.	HOT TRANS	2.21	12.12	529.9	5.93	15.96
IDLE CO,PCT (MEAS)				1.10						
IDLE CO,PCT (SPEC)				.30	1975 FTP	2.41	18.03	597.1	4.42	14.02
OTHER TESTS: THE 5 SHORT CYCLE TESTS										
2401	1972	OLDS	STAW	455	COLD TRANS	2.81	51.00	697.2	6.63	11.29
					COLD STAB	1.91	23.72	719.4	4.32	11.64
IDLE HC,PPM/HEXANE				90.	HOT TRANS	1.86	13.72	622.0	6.62	13.67
IDLE CO,PCT (MEAS)				1.20						
IDLE CO,PCT (SPEC)				.30	1975 FTP	2.08	26.61	688.2	5.42	12.05
OTHER TESTS: THE 5 SHORT CYCLE TESTS										
2402	1972	PLYM	SATE	318	COLD TRANS	4.26	50.76	556.4	6.26	13.66
					COLD STAB	3.80	61.30	541.4	4.46	13.66
IDLE HC,PPM/HEXANE				155.	HOT TRANS	2.86	27.84	497.4	7.12	16.13
IDLE CO,PCT (MEAS)				3.80						
IDLE CO,PCT (SPEC)				.50	1975 FTP	3.64	50.00	532.5	5.56	14.26
OTHER TESTS: THE 5 SHORT CYCLE TESTS										

EMISSION RESULTS IN GRAMS PER MILE
FUEL ECONOMY IN MILES PER GALLON

APPENDIX E

LISTING OF FEDERAL TEST PROCEDURE RESULTS ON INDIVIDUAL VEHICLES

ST. LOUIS

VEHICLE NUMBER	YEAR	MAKE	MODEL	CID	TEST TYPE	HC	CO	CO2	NOXC	FUEL ECONOMY
2403	1972	PONT	STAW	400	COLD TRANS	6.10	89.35	622.1	5.38	11.35
					COLD STAB	6.62	90.75	554.2	4.57	12.36
IDLE HC,PPM/HEXANE				650.	HOT TRANS	4.43	43.36	546.7	6.77	14.11
IDLE CO,PCT (MEAS)				5.85						
IDLE CO,PCT (SPEC)				.80	1975 FTP	5.92	77.53	566.1	5.34	12.56
OTHER TESTS: THE 5 SHORT CYCLE TESTS										
2404	1972	CAPR	COUP	122	COLD TRANS	4.76	60.32	319.2	4.04	20.68
					COLD STAB	3.77	78.13	318.4	2.06	19.59
IDLE HC,PPM/HEXANE				272.	HOT TRANS	3.00	32.73	352.7	4.90	21.45
IDLE CO,PCT (MEAS)				6.00						
IDLE CO,PCT (SPEC)				1.20	1975 FTP	3.76	62.08	327.9	3.24	20.29
OTHER TESTS: THE 5 SHORT CYCLE TESTS										
1159	1971	BUIC	RIVE	455	COLD TRANS	5.51	113.54	839.5	4.91	8.57
					COLD STAB	4.36	99.67	864.3	3.49	8.58
IDLE HC,PPM/HEXANE				115.	HOT TRANS	3.68	48.57	727.5	5.09	10.88
IDLE CO,PCT (MEAS)				2.05						
IDLE CO,PCT (SPEC)				1.00	1975 FTP	4.41	88.58	821.9	4.22	9.10
OTHER TESTS: MODAL, THE 5 SHORT CYCLE TESTS										
1160	1971	BUIC	SKYL	350	COLD TRANS	8.70	71.49	753.9	3.37	9.93
					COLD STAB	7.70	53.05	703.1	2.20	10.95
IDLE HC,PPM/HEXANE				380.	HOT TRANS	6.08	25.50	650.9	2.98	12.50
IDLE CO,PCT (MEAS)				1.30						
IDLE CO,PCT (SPEC)				.60	1975 FTP	7.47	49.33	699.3	2.65	11.09
OTHER TESTS: MODAL, THE 5 SHORT CYCLE TESTS										
1161	1971	CHEV	VEGA	140	COLD TRANS	4.06	82.60	344.5	3.09	18.22
					COLD STAB	3.19	54.05	328.2	2.57	20.97
IDLE HC,PPM/HEXANE				310.	HOT TRANS	2.83	38.60	316.3	3.61	23.00
IDLE CO,PCT (MEAS)				4.20						
IDLE CO,PCT (SPEC)				2.00	1975 FTP	3.27	55.71	328.3	2.96	20.82
OTHER TESTS: MODAL, THE 5 SHORT CYCLE TESTS										

EMISSION RESULTS IN GRAMS PER MILE
FUEL ECONOMY IN MILES PER GALLON

APPENDIX E

LISTING OF FEDERAL TEST PROCEDURE RESULTS ON INDIVIDUAL VEHICLES

ST. LOUIS

VEHICLE NUMBER	YEAR	MAKE	MODEL	CID	TEST TYPE	HC	CO	CO2	NOXC	FUEL ECONOMY
1162	1971	CHEV	CHEL	350	COLD TRANS	4.43	62.52	643.9	3.98	11.74
					COLD STAB	4.51	81.13	589.0	1.89	12.15
IDLE HC,PPM/HEXANE				450.	HOT TRANS	4.34	45.16	517.4	5.84	14.74
IDLE CO,PCT (MEAS)				4.55						
IDLE CO,PCT (SPEC)				.60	1975 FTP	4.45	67.48	580.8	3.40	12.66
OTHER TESTS: MODAL, THE 5 SHORT CYCLE TESTS										
1163	1971	CHEV	NOVA	250	COLD TRANS	1.86	36.12	620.8	3.56	12.99
					COLD STAB	1.00	6.67	628.8	1.99	13.82
IDLE HC,PPM/HEXANE				85.	HOT TRANS	1.60	6.10	549.3	2.82	15.74
IDLE CO,PCT (MEAS)				.12						
IDLE CO,PCT (SPEC)				1.10	1975 FTP	1.34	12.57	605.5	2.54	14.10
OTHER TESTS: MODAL, THE 5 SHORT CYCLE TESTS										
1164	1971	CHEV	IMPA	350	COLD TRANS	3.06	59.24	648.8	3.80	11.81
					COLD STAB	2.78	50.39	620.1	1.97	12.53
IDLE HC,PPM/HEXANE				225.	HOT TRANS	2.48	30.54	558.8	3.48	14.44
IDLE CO,PCT (MEAS)				3.50						
IDLE CO,PCT (SPEC)				.60	1975 FTP	2.76	46.80	609.3	2.76	12.83
OTHER TESTS: MODAL, THE 5 SHORT CYCLE TESTS										
1165	1971	CHEV	IMPA	350	COLD TRANS	5.07	56.86	676.6	5.67	11.35
					COLD STAB	2.58	15.77	738.9	3.54	11.50
IDLE HC,PPM/HEXANE				6.	HOT TRANS	2.52	19.27	622.0	5.88	13.44
IDLE CO,PCT (MEAS)				.02						
IDLE CO,PCT (SPEC)				.60	1975 FTP	3.07	25.18	694.2	4.62	11.94
OTHER TESTS: MODAL, THE 5 SHORT CYCLE TESTS										
1166	1971	CHRY	NEWP	383	COLD TRANS	6.60	116.88	588.7	5.66	11.19
					COLD STAB	5.94	146.74	582.9	3.88	10.66
IDLE HC,PPM/HEXANE				75.	HOT TRANS	4.18	74.90	526.9	6.25	13.49
IDLE CO,PCT (MEAS)				1.60						
IDLE CO,PCT (SPEC)				.80	1975 FTP	5.60	120.99	568.8	4.89	11.43
OTHER TESTS: MODAL, THE 5 SHORT CYCLE TESTS										

EMISSION RESULTS IN GRAMS PER MILE
FUEL ECONOMY IN MILES PER GALLON

APPENDIX E

LISTING OF FEDERAL TEST PROCEDURE RESULTS ON INDIVIDUAL VEHICLES

ST. LOUIS

VEHICLE NUMBER	YEAR	MAKE	MODEL	CID	TEST TYPE	HC	CO	CO2	NOXC	FUEL ECONOMY
1167	1971	DODG	CHAR	318	COLD TRANS	10.71	84.71	528.3	5.38	12.76
					COLD STAB	13.06	50.63	502.3	4.38	14.24
IDLE HC,PPM/HEXANE				1710.	HOT TRANS	7.88	32.33	470.9	6.22	16.23
IDLE CO,PCT (MEAS)				.28						
IDLE CO,PCT (SPEC)				.80	1975 FTP	11.16	52.65	499.1	5.09	14.38
OTHER TESTS: MODAL, THE 5 SHORT CYCLE TESTS										
1168	1971	FORD	PINT	122	COLD TRANS	3.12	46.81	310.1	5.08	22.55
					COLD STAB	2.25	19.45	337.3	3.57	23.67
IDLE HC,PPM/HEXANE				97.	HOT TRANS	1.86	9.99	297.8	5.77	27.79
IDLE CO,PCT (MEAS)				.42						
IDLE CO,PCT (SPEC)				1.50	1975 FTP	2.32	22.50	320.9	4.48	24.41
OTHER TESTS: MODAL, THE 5 SHORT CYCLE TESTS										
1169	1971	FORD	TORI	302	COLD TRANS	5.65	59.06	585.1	5.81	12.75
					COLD STAB	2.16	19.41	608.2	2.96	13.75
IDLE HC,PPM/HEXANE				88.	HOT TRANS	3.43	17.96	536.6	5.86	15.42
IDLE CO,PCT (MEAS)				1.35						
IDLE CO,PCT (SPEC)				.40	1975 FTP	3.23	27.18	583.9	4.34	13.94
OTHER TESTS: MODAL, THE 5 SHORT CYCLE TESTS										
1170	1971	FORD	MAVE	200	COLD TRANS	3.61	49.66	429.2	8.41	17.11
					COLD STAB	2.68	36.30	423.4	5.20	18.15
IDLE HC,PPM/HEXANE				195.	HOT TRANS	2.49	18.55	388.8	7.83	20.84
IDLE CO,PCT (MEAS)				3.00						
IDLE CO,PCT (SPEC)				1.30	1975 FTP	2.82	34.20	415.2	6.58	18.57
OTHER TESTS: MODAL, THE 5 SHORT CYCLE TESTS										
1171	1971	FORD	GALA	351	COLD TRANS	4.35	73.29	555.3	7.22	12.97
					COLD STAB	3.11	70.57	553.4	3.78	13.17
IDLE HC,PPM/HEXANE				205.	HOT TRANS	2.73	34.51	487.5	7.89	16.13
IDLE CO,PCT (MEAS)				3.80						
IDLE CO,PCT (SPEC)				.60	1975 FTP	3.26	61.29	535.8	5.61	13.81
OTHER TESTS: MODAL, THE 5 SHORT CYCLE TESTS										

EMISSION RESULTS IN GRAMS PER MILE
FUEL ECONOMY IN MILES PER GALLON

APPENDIX E

LISTING OF FEDERAL TEST PROCEDURE RESULTS ON INDIVIDUAL VEHICLES

ST. LOUIS

VEHICLE NUMBER	YEAR	MAKE	MODEL	CID	TEST TYPE	HC	CO	CO2	NOXC	FUEL ECONOMY
1172	1971	FORD	STAW	400	COLD TRANS	21.09	188.82	656.7	3.29	8.70
					COLD STAB	4.98	32.65	726.7	3.04	11.18
IDLE HC,PPM/HEXANE				155.	HOT TRANS	4.05	17.16	645.7	5.27	12.95
IDLE CO,PCT (MEAS)				.60						
IDLE CO,PCT (SPEC)				.80	1975 FTP	8.04	60.57	690.2	3.70	10.95
OTHER TESTS: MODAL, THE 5 SHORT CYCLE TESTS										
1173	1971	MERC	COUG	351	COLD TRANS	6.36	42.43	278.3	2.80	24.31
					COLD STAB	4.04	78.32	513.9	2.62	13.66
IDLE HC,PPM/HEXANE				310.	HOT TRANS	5.07	35.51	496.7	2.53	15.61
IDLE CO,PCT (MEAS)				4.50						
IDLE CO,PCT (SPEC)				.20	1975 FTP	4.80	59.25	460.7	2.63	15.60
OTHER TESTS: MODAL, THE 5 SHORT CYCLE TESTS										
1174	1971	OLDS	CUTL	350	COLD TRANS	4.99	86.04	551.1	7.22	12.64
					COLD STAB	3.15	52.09	587.8	4.04	13.06
IDLE HC,PPM/HEXANE				160.	HOT TRANS	2.60	27.44	497.5	7.55	16.17
IDLE CO,PCT (MEAS)				3.10						
IDLE CO,PCT (SPEC)				.60	1975 FTP	3.38	52.35	555.6	5.65	13.68
OTHER TESTS: MODAL, THE 5 SHORT CYCLE TESTS										
1175	1971	PLYM	DUST	225	COLD TRANS	4.84	97.84	457.7	5.20	14.16
					COLD STAB	2.67	32.24	459.9	4.92	17.10
IDLE HC,PPM/HEXANE				11.	HOT TRANS	2.44	36.91	411.8	5.88	18.58
IDLE CO,PCT (MEAS)				.22						
IDLE CO,PCT (SPEC)				.80	1975 FTP	3.05	47.02	446.3	5.24	16.75
OTHER TESTS: MODAL, THE 5 SHORT CYCLE TESTS										
1176	1971	PONT	CATA	350	COLD TRANS	5.91	85.51	647.7	6.61	11.08
					COLD STAB	5.24	85.96	594.4	3.81	11.90
IDLE HC,PPM/HEXANE				250.	HOT TRANS	4.40	39.75	575.5	7.78	13.61
IDLE CO,PCT (MEAS)				4.10						
IDLE CO,PCT (SPEC)				1.00	1975 FTP	5.15	73.26	600.2	5.47	12.13
OTHER TESTS: MODAL, THE 5 SHORT CYCLE TESTS										

EMISSION RESULTS IN GRAMS PER MILE
FUEL ECONOMY IN MILES PER GALLON

APPENDIX E

LISTING OF FEDERAL TEST PROCEDURE RESULTS ON INDIVIDUAL VEHICLES

ST. LOUIS

VEHICLE NUMBER	YEAR	MAKE	MODEL	CID	TEST TYPE	HC	CO	CO2	NOXC	FUEL ECONOMY
1177	1971	PONT	LEMA	350	COLD TRANS	6.58	100.38	640.0	5.05	10.84
					COLD STAB	5.08	87.74	640.4	2.37	11.17
IDLE HC,PPM/HEXANE				240.	HOT TRANS	4.00	41.94	576.3	5.62	13.55
IDLE CO,PCT (MEAS)				2.80						
IDLE CO,PCT (SPEC)				1.00	1975 FTP	5.10	77.85	622.8	3.80	11.66
OTHER TESTS: MODAL, THE 5 SHORT CYCLE TESTS										
1178	1971	DATS	B110	97	COLD TRANS	34.98	106.22	179.0	.66	19.43
					COLD STAB	34.98	130.66	183.2	.32	17.77
IDLE HC,PPM/HEXANE				2000.	HOT TRANS	32.01	115.13	156.5	.35	20.22
IDLE CO,PCT (MEAS)				3.30						
IDLE CO,PCT (SPEC)				2.00	1975 FTP	34.17	121.40	175.1	.40	18.72
OTHER TESTS: MODAL, THE 5 SHORT CYCLE TESTS										
1179	1971	TOYO	CORO	71	COLD TRANS	3.05	65.89	320.4	6.07	20.47
					COLD STAB	2.49	76.52	266.7	1.58	22.48
IDLE HC,PPM/HEXANE				360.	HOT TRANS	2.31	67.25	280.0	4.23	22.58
IDLE CO,PCT (MEAS)				5.40						
IDLE CO,PCT (SPEC)				2.50	1975 FTP	2.56	71.80	281.4	3.23	22.06
OTHER TESTS: MODAL, THE 5 SHORT CYCLE TESTS										
1180	1971	VOLK	SEDA	97	COLD TRANS	5.16	65.15	307.3	4.28	20.83
					COLD STAB	4.20	51.95	329.5	2.58	20.91
IDLE HC,PPM/HEXANE				305.	HOT TRANS	3.36	33.77	283.9	3.84	25.53
IDLE CO,PCT (MEAS)				3.80						
IDLE CO,PCT (SPEC)				2.00	1975 FTP	4.16	49.71	312.5	3.27	21.98
OTHER TESTS: MODAL, THE 5 SHORT CYCLE TESTS										
1405	1971	AMC	MATA	360	COLD TRANS	5.77	107.43	527.8	3.84	12.41
					COLD STAB	2.73	19.80	627.0	2.42	13.31
IDLE HC,PPM/HEXANE				127.	HOT TRANS	2.88	13.26	509.6	6.14	16.45
IDLE CO,PCT (MEAS)				.55						
IDLE CO,PCT (SPEC)				1.30	1975 FTP	3.40	36.06	574.6	3.73	13.82
OTHER TESTS: THE 5 SHORT CYCLE TESTS										

EMISSION RESULTS IN GRAMS PER MILE
FUEL ECONOMY IN MILES PER GALLON

APPENDIX F

LISTING OF FEDERAL TEST PROCEDURE RESULTS ON INDIVIDUAL VEHICLES

ST. LOUIS

VEHICLE NUMBER	YEAR	MAKE	MODEL	CID	TEST TYPE	HC	CO	CO2	NOXC	FUEL ECONOMY
1406	1971	BUIC	ELEC	455	COLD TRANS	8.68	67.57	782.5	5.98	9.69
					COLD STAB	6.80	80.95	713.0	3.59	10.30
IDLE HC,PPM/HEXANE				190.	HOT TRANS	4.76	39.42	664.1	6.65	11.98
IDLE CO,PCT (MEAS)				2.20						
IDLE CO,PCT (SPEC)				1.00	1975 FTP	6.63	66.87	713.9	4.92	10.57
OTHER TESTS: THE 5 SHORT CYCLE TESTS										
1407	1971	CADI	DEVI	472	COLD TRANS	2.78	74.92	912.2	5.16	8.54
					COLD STAB	1.37	37.17	917.9	2.93	9.05
IDLE HC,PPM/HEXANE				125.	HOT TRANS	1.77	28.89	760.8	5.49	10.93
IDLE CO,PCT (MEAS)				2.80						
IDLE CO,PCT (SPEC)				1.00	1975 FTP	1.77	42.68	873.8	4.09	9.38
OTHER TESTS: THE 5 SHORT CYCLE TESTS										
1408	1971	CHEV	MONT	350	COLD TRANS	4.45	97.59	635.5	3.64	11.05
					COLD STAB	4.22	106.49	613.7	2.46	11.17
IDLE HC,PPM/HEXANE				280.	HOT TRANS	3.19	62.14	568.0	4.04	13.13
IDLE CO,PCT (MEAS)				5.30						
IDLE CO,PCT (SPEC)				.60	1975 FTP	3.99	92.56	605.7	3.13	11.62
OTHER TESTS: THE 5 SHORT CYCLE TESTS										
1409	1971	CHEV	CHEL	307	COLD TRANS	4.39	33.87	549.2	6.67	14.40
					COLD STAB	4.33	36.15	499.1	4.22	15.58
IDLE HC,PPM/HEXANE				625.	HOT TRANS	3.78	21.97	473.1	6.48	17.08
IDLE CO,PCT (MEAS)				3.60						
IDLE CO,PCT (SPEC)				.60	1975 FTP	4.19	31.81	502.3	5.34	15.69
OTHER TESTS: THE 5 SHORT CYCLE TESTS										
1410	1971	CHEV	CHEL	350	COLD TRANS	2.26	19.28	737.8	5.47	11.45
					COLD STAB	3.12	47.88	595.2	2.55	13.05
IDLE HC,PPM/HEXANE				112.	HOT TRANS	2.80	29.16	497.6	4.00	16.07
IDLE CO,PCT (MEAS)				1.25						
IDLE CO,PCT (SPEC)				.60	1975 FTP	2.85	36.89	597.9	3.54	13.35
OTHER TESTS: THE 5 SHORT CYCLE TESTS										

EMISSION RESULTS IN GRAMS PER MILE
FUEL ECONOMY IN MILES PER GALLON

APPENDIX E

LISTING OF FEDERAL TEST PROCEDURE RESULTS ON INDIVIDUAL VEHICLES

ST. LOUIS

VEHICLE NUMBER	YEAR	MAKE	MODEL	CID	TEST TYPE	HC	CO	CO2	NOXC	FUEL ECONOMY
1411	1971	CHEV	IMPA	350	COLD TRANS	5.12	82.53	574.8	5.43	12.31
					COLD STAB	5.83	109.53	590.5	3.01	11.36
IDLE HC,PPM/HEXANE				450.	HOT TRANS	4.18	47.11	547.6	5.78	13.98
IDLE CO,PCT (MEAS)				5.90						
IDLE CO,PCT (SPEC)				.60	1975 FTP	5.23	86.94	575.6	4.26	12.18
OTHER TESTS: THE 5 SHORT CYCLE TESTS										
1412	1971	DODG	DART	225	COLD TRANS	4.45	76.53	409.5	7.81	16.32
					COLD STAB	3.48	76.96	378.5	5.44	17.39
IDLE HC,PPM/HEXANE				930.	HOT TRANS	4.52	64.01	361.3	6.55	18.64
IDLE CO,PCT (MEAS)				8.25						
IDLE CO,PCT (SPEC)				.80	1975 FTP	3.96	73.34	380.2	6.23	17.47
OTHER TESTS: THE 5 SHORT CYCLE TESTS										
1413	1971	FORD	MUST	302	COLD TRANS	6.46	45.10	532.1	7.66	14.23
					COLD STAB	3.76	51.82	499.6	3.93	14.97
IDLE HC,PPM/HEXANE				167.	HOT TRANS	8.30	26.41	465.5	7.81	16.64
IDLE CO,PCT (MEAS)				2.40						
IDLE CO,PCT (SPEC)				.40	1975 FTP	5.56	43.50	497.0	5.75	15.22
OTHER TESTS: THE 5 SHORT CYCLE TESTS										
1414	1971	FORD	TORI	351	COLD TRANS	4.88	64.77	418.6	2.97	16.56
					COLD STAB	3.37	52.59	369.2	1.70	19.19
IDLE HC,PPM/HEXANE				110.	HOT TRANS	2.83	30.35	338.1	2.76	22.48
IDLE CO,PCT (MEAS)				1.60						
IDLE CO,PCT (SPEC)				.20	1975 FTP	3.53	49.03	370.9	2.25	19.33
OTHER TESTS: THE 5 SHORT CYCLE TESTS										
1415	1971	FORD	LTD	351	COLD TRANS	23.27	169.72	529.7	3.49	10.20
					COLD STAB	29.07	56.52	568.0	4.75	11.85
IDLE HC,PPM/HEXANE				2000.	HOT TRANS	18.63	37.56	512.2	6.84	14.08
IDLE CO,PCT (MEAS)				3.30						
IDLE CO,PCT (SPEC)				.60	1975 FTP	25.02	74.65	544.9	5.06	11.97
OTHER TESTS: THE 5 SHORT CYCLE TESTS										

EMISSION RESULTS IN GRAMS PER MILE
FUEL ECONOMY IN MILES PER GALLON

APPENDIX E

LISTING OF FEDERAL TEST PROCEDURE RESULTS ON INDIVIDUAL VEHICLES

ST. LOUIS

VEHICLE NUMBER	YEAR	MAKE	MODEL	CID	TEST TYPE	HC	CO	CO2	NOXC	FUEL ECONOMY
1416	1971	MERC	MONR	400	COLD TRANS	5.89	130.57	679.6	7.22	9.82
					COLD STAB	4.02	77.71	674.0	5.44	10.97
IDLE HC,PPM/HEXANE				330.	HOT TRANS	4.69	40.78	605.7	9.27	12.96
IDLE CO,PCT (MEAS)				4.90						
IDLE CO,PCT (SPEC)				.80	1975 FTP	4.59	78.51	656.5	6.85	11.17
OTHER TESTS: THE 5 SHORT CYCLE TESTS										
1417	1971	OLDS	CUTL	350	COLD TRANS	4.66	52.29	602.4	5.82	12.69
					COLD STAB	2.54	29.79	630.0	3.52	12.96
IDLE HC,PPM/HEXANE				98.	HOT TRANS	2.35	16.11	525.7	5.85	15.89
IDLE CO,PCT (MEAS)				1.25						
IDLE CO,PCT (SPEC)				.60	1975 FTP	2.93	30.69	595.9	4.63	13.58
OTHER TESTS: THE 5 SHORT CYCLE TESTS										
1418	1971	OLDS	CUTL	350	COLD TRANS	4.55	63.95	596.8	4.44	12.47
					COLD STAB	4.34	79.81	526.2	3.36	13.34
IDLE HC,PPM/HEXANE				210.	HOT TRANS	3.83	33.11	511.0	5.09	15.43
IDLE CO,PCT (MEAS)				.75						
IDLE CO,PCT (SPEC)				.60	1975 FTP	4.25	63.80	536.6	4.05	13.65
OTHER TESTS: THE 5 SHORT CYCLE TESTS										
1419	1971	PLYM	DUST	318	COLD TRANS	8.36	186.38	471.7	1.49	11.22
					COLD STAB	9.47	220.30	484.4	.76	10.31
IDLE HC,PPM/HEXANE				360.	HOT TRANS	5.86	91.38	423.9	3.35	15.14
IDLE CO,PCT (MEAS)				6.00						
IDLE CO,PCT (SPEC)				.80	1975 FTP	8.26	178.14	465.3	1.62	11.51
OTHER TESTS: THE 5 SHORT CYCLE TESTS										
1420	1971	PLYM	STAW	360	COLD TRANS	11.26	327.38	562.9	2.77	7.97
					COLD STAB	8.97	283.94	556.4	1.45	8.61
IDLE HC,PPM/HEXANE				195.	HOT TRANS	8.54	266.54	448.4	1.45	9.92
IDLE CO,PCT (MEAS)				3.60						
IDLE CO,PCT (SPEC)				1.00	1975 FTP	9.32	288.13	528.3	1.72	8.78
OTHER TESTS: THE 5 SHORT CYCLE TESTS										

EMISSION RESULTS IN GRAMS PER MILE
FUEL ECONOMY IN MILES PER GALLON

APPENDIX E

LISTING OF FEDERAL TEST PROCEDURE RESULTS ON INDIVIDUAL VEHICLES

ST. LOUIS

VEHICLE NUMBER	YEAR	MAKE	MODEL	CID	TEST TYPE	HC	CO	CO2	NOXC	FUEL ECONOMY
1421	1971	PONT	CATA	350	COLD TRANS	5.86	83.70	678.3	5.52	10.71
					COLD STAB	3.02	13.87	697.9	3.71	12.17
IDLE HC,PPM/HEXANE				130.	HOT TRANS	3.05	13.96	606.8	6.27	13.90
IDLE CO,PCT (MEAS)				.25						
IDLE CO,PCT (SPEC)				1.00	1975 FTP	3.61	28.27	669.0	4.78	12.24
OTHER TESTS: THE 5 SHORT CYCLE TESTS										
1422	1971	VOLK	SEDA	97	COLD TRANS	6.15	87.73	286.6	1.59	19.99
					COLD STAB	8.28	108.18	288.9	.78	18.29
IDLE HC,PPM/HEXANE				210.	HOT TRANS	6.61	76.58	262.6	1.37	21.97
IDLE CO,PCT (MEAS)				3.00						
IDLE CO,PCT (SPEC)				2.00	1975 FTP	7.39	95.35	281.2	1.11	19.53
OTHER TESTS: THE 5 SHORT CYCLE TESTS										
0181	1970	AMC	JAVE	232	COLD TRANS	4.33	52.82	378.4	3.34	18.68
					COLD STAB	4.64	23.20	1017.7	2.14	8.30
IDLE HC,PPM/HEXANE				340.	HOT TRANS	3.55	27.94	358.4	3.32	21.46
IDLE CO,PCT (MEAS)				2.60						
IDLE CO,PCT (SPEC)				1.30	1975 FTP	4.28	30.59	706.2	2.71	11.56
OTHER TESTS: MODAL, THE 5 SHORT CYCLE TESTS										
0182	1970	BUIC	LESA	455	COLD TRANS	5.73	128.45	695.6	6.01	9.69
					COLD STAB	4.47	31.26	695.2	3.35	11.70
IDLE HC,PPM/HEXANE				150.	HOT TRANS	4.48	18.61	595.8	6.17	13.88
IDLE CO,PCT (MEAS)				.22						
IDLE CO,PCT (SPEC)				1.50	1975 FTP	4.73	47.81	668.2	4.67	11.70
OTHER TESTS: MODAL, THE 5 SHORT CYCLE TESTS										
0183	1970	CHEV	NOVA	250	COLD TRANS	3.44	50.16	483.6	3.84	15.48
					COLD STAB	2.14	22.59	513.1	2.48	15.98
IDLE HC,PPM/HEXANE				81.	HOT TRANS	2.12	15.78	429.7	4.19	19.24
IDLE CO,PCT (MEAS)				.49						
IDLE CO,PCT (SPEC)				1.30	1975 FTP	2.40	26.40	484.3	3.22	16.64
OTHER TESTS: MODAL, THE 5 SHORT CYCLE TESTS										

EMISSION RESULTS IN GRAMS PER MILE
FUEL ECONOMY IN MILES PER GALLON

APPENDIX E

LISTING OF FEDERAL TEST PROCEDURE RESULTS ON INDIVIDUAL VEHICLES

ST. LOUIS

VEHICLE NUMBER	YEAR	MAKE	MODEL	CID	TEST TYPE	HC	CO	CO2	NOXC	FUEL ECONOMY
0184	1970	CHEV	CHEL	307	COLD TRANS	8.72	77.89	464.9	3.73	14.43
					COLD STAB	12.90	103.00	395.5	2.02	14.83
IDLE HC,PPM/HEXANE			1410.		HOT TRANS	9.18	58.72	388.1	3.83	17.42
IDLE CO,PCT (MEAS)			8.10							
IDLE CO,PCT (SPEC)			1.30		1975 FTP	11.02	85.75	407.8	2.87	15.37
OTHER TESTS: MODAL, THE 5 SHORT CYCLE TESTS										
0185	1970	CHEV	CHEL	350	COLD TRANS	4.50	98.99	553.1	3.63	12.28
					COLD STAB	3.44	78.55	569.7	2.05	12.61
IDLE HC,PPM/HEXANE			105.		HOT TRANS	3.97	43.57	515.1	3.67	14.89
IDLE CO,PCT (MEAS)			2.20							
IDLE CO,PCT (SPEC)			1.30		1975 FTP	3.80	73.21	551.4	2.82	13.08
OTHER TESTS: MODAL, THE 5 SHORT CYCLE TESTS										
0186	1970	CHEV	IMPA	350	COLD TRANS	7.87	138.39	434.9	4.70	13.10
					COLD STAB	7.91	144.88	395.4	1.77	13.69
IDLE HC,PPM/HEXANE			420.		HOT TRANS	6.64	91.04	397.9	5.64	15.79
IDLE CO,PCT (MEAS)			4.90							
IDLE CO,PCT (SPEC)			1.30		1975 FTP	7.56	128.86	404.2	3.43	14.07
OTHER TESTS: MODAL, THE 5 SHORT CYCLE TESTS										
0187	1970	CHEV	IMPA	350	COLD TRANS	5.58	124.44	536.6	2.69	11.84
					COLD STAB	3.23	44.84	586.5	2.03	13.30
IDLE HC,PPM/HEXANE			245.		HOT TRANS	3.09	43.47	511.0	3.04	15.07
IDLE CO,PCT (MEAS)			2.20							
IDLE CO,PCT (SPEC)			1.30		1975 FTP	3.67	60.85	555.6	2.44	13.39
OTHER TESTS: MODAL, THE 5 SHORT CYCLE TESTS										
0188	1970	DODG	CORO	225	COLD TRANS	17.58	199.66	332.2	2.72	12.65
					COLD STAB	4.36	108.89	355.7	2.95	16.42
IDLE HC,PPM/HEXANE			135.		HOT TRANS	3.90	75.30	346.4	4.84	18.60
IDLE CO,PCT (MEAS)			2.35							
IDLE CO,PCT (SPEC)			99.99		1975 FTP	6.96	118.41	348.3	3.42	15.95
OTHER TESTS: MODAL, THE 5 SHORT CYCLE TESTS										

EMISSION RESULTS IN GRAMS PER MILE
FUEL ECONOMY IN MILES PER GALLON

APPENDIX E

LISTING OF FEDERAL TEST PROCEDURE RESULTS ON INDIVIDUAL VEHICLES

ST. LOUIS

VEHICLE NUMBER	YEAR	MAKE	MODEL	CID	TEST TYPE	HC	CO	CO2	NOXC	FUEL ECONOMY
0189	1970	FORD	MUST	302	COLD TRANS	4.14	73.95	547.8	2.62	13.11
					COLD STAB	2.67	43.67	539.2	1.43	14.40
IDLE HC,PPM/HEXANE			240.		HOT TRANS	2.82	20.46	490.4	2.93	16.70
IDLE CO,PCT (MEAS)			3.50							
IDLE CO,PCT (SPEC)			.80		1975 FTP	3.01	43.57	527.7	2.08	14.65
OTHER TESTS: MODAL, THE 5 SHORT CYCLE TESTS										
0190	1970	FORD	STAW	302	COLD TRANS	5.47	90.21	511.4	5.46	13.24
					COLD STAB	4.75	95.63	477.9	2.57	13.80
IDLE HC,PPM/HEXANE			330.		HOT TRANS	4.21	52.65	467.0	6.13	15.76
IDLE CO,PCT (MEAS)			5.20							
IDLE CO,PCT (SPEC)			1.00		1975 FTP	4.75	82.79	481.8	4.13	14.16
OTHER TESTS: MODAL, THE 5 SHORT CYCLE TESTS										
0191	1970	FORD	LTD	351	COLD TRANS	10.85	101.25	542.4	5.36	12.06
					COLD STAB	13.98	154.65	475.6	2.42	11.63
IDLE HC,PPM/HEXANE			1225.		HOT TRANS	8.85	57.48	486.8	6.39	14.66
IDLE CO,PCT (MEAS)			2.10							
IDLE CO,PCT (SPEC)			2.00		1975 FTP	11.93	117.15	492.4	4.11	12.42
OTHER TESTS: MODAL, THE 5 SHORT CYCLE TESTS										
0192	1970	FORD	LTD	351	COLD TRANS	10.13	152.64	457.2	3.68	12.17
					COLD STAB	3.60	18.02	334.9	2.42	23.69
IDLE HC,PPM/HEXANE			35.		HOT TRANS	3.90	15.02	468.8	6.65	17.58
IDLE CO,PCT (MEAS)			.26							
IDLE CO,PCT (SPEC)			2.00		1975 FTP	5.03	44.91	396.6	3.83	18.37
OTHER TESTS: MODAL, THE 5 SHORT CYCLE TESTS										
0193	1970	MERC	MARQ	390	COLD TRANS	5.47	78.57	702.4	7.35	10.53
					COLD STAB	3.27	38.05	781.4	5.00	10.42
IDLE HC,PPM/HEXANE			38.		HOT TRANS	3.33	26.53	605.0	8.04	13.50
IDLE CO,PCT (MEAS)			.56							
IDLE CO,PCT (SPEC)			.80		1975 FTP	3.74	43.25	717.0	6.31	11.14
OTHER TESTS: MODAL, THE 5 SHORT CYCLE TESTS										

EMISSION RESULTS IN GRAMS PER MILE
FUEL ECONOMY IN MILES PER GALLON

APPENDIX E

LISTING OF FEDERAL TEST PROCEDURE RESULTS ON INDIVIDUAL VEHICLES

ST. LOUIS

VEHICLE NUMBER	YEAR	MAKE	MODEL	CID	TEST TYPE	HC	CO	CO2	NOXC	FUEL ECONOMY
0194	1970	OLDS	STAW	350	COLD TRANS	5.42	86.93	643.0	3.74	11.14
					COLD STAB	5.43	121.27	572.2	1.80	11.38
IDLE HC,PPM/HEXANE			110.		HOT TRANS	4.64	70.62	535.8	3.57	13.42
IDLE CO,PCT (MEAS)			2.60							
IDLE CO,PCT (SPEC)			.70		1975 FTP	5.21	100.38	576.8	2.68	11.82
OTHER TESTS: MODAL, THE 5 SHORT CYCLE TESTS										
0195	1970	PLYM	STAW	383	COLD TRANS	12.37	339.21	636.3	8.08	7.34
					COLD STAB	3.45	44.26	678.0	4.67	11.70
IDLE HC,PPM/HEXANE			43.		HOT TRANS	3.85	30.55	601.4	8.58	13.41
IDLE CO,PCT (MEAS)			.19							
IDLE CO,PCT (SPEC)			.80		1975 FTP	5.40	101.23	648.5	6.44	10.76
OTHER TESTS: MODAL, THE 5 SHORT CYCLE TESTS										
0196	1970	PLYM	DUST	318	COLD TRANS	3.97	77.78	465.7	6.54	14.78
					COLD STAB	5.20	130.25	429.0	4.08	13.65
IDLE HC,PPM/HEXANE			105.		HOT TRANS	4.17	94.00	382.1	4.52	16.34
IDLE CO,PCT (MEAS)			2.30							
IDLE CO,PCT (SPEC)			.80		1975 FTP	4.67	109.56	423.7	4.71	14.53
OTHER TESTS: MODAL, THE 5 SHORT CYCLE TESTS										
0197	1970	PONT	LEMA	350	COLD TRANS	6.19	81.43	537.0	6.48	12.96
					COLD STAB	6.53	78.70	487.7	4.51	14.04
IDLE HC,PPM/HEXANE			238.		HOT TRANS	4.65	41.22	475.1	7.62	16.00
IDLE CO,PCT (MEAS)			2.60							
IDLE CO,PCT (SPEC)			1.00		1975 FTP	5.95	69.04	494.4	5.76	14.27
OTHER TESTS: MODAL, THE 5 SHORT CYCLE TESTS										
0198	1970	DATS	510	97	COLD TRANS	50.76	214.92	188.3	.52	12.92
					COLD STAB	33.46	82.43	258.1	2.70	17.98
IDLE HC,PPM/HEXANE			200.		HOT TRANS	3.16	15.80	252.2	5.97	30.92
IDLE CO,PCT (MEAS)			1.80							
IDLE CO,PCT (SPEC)			99.99		1975 FTP	28.76	91.52	242.1	3.14	18.60
OTHER TESTS: MODAL, THE 5 SHORT CYCLE TESTS										

EMISSION RESULTS IN GRAMS PER MILE
FUEL ECONOMY IN MILES PER GALLON

APPENDIX E

LISTING OF FEDERAL TEST PROCEDURE RESULTS ON INDIVIDUAL VEHICLES

ST. LOUIS

VEHICLE NUMBER	YEAR	MAKE	MODEL	CID	TEST TYPE	HC	CO	CO2	NOXC	FUEL ECONOMY
0200	1970	VOLK	SEDA	97	COLD TRANS	3.96	69.97	288.8	4.90	21.58
					COLD STAB	3.47	69.76	312.3	2.71	20.50
IDLE HC,PPM/HEXANE				122.	HOT TRANS	2.61	41.28	268.5	4.31	25.98
IDLE CO,PCT (MEAS)				3.70						
IDLE CO,PCT (SPEC)				3.00	1975 FTP	3.34	62.03	295.5	3.59	21.99
OTHER TESTS: MODAL, THE 5 SHORT CYCLE TESTS										
0423	1970	BUIC	SKYL	350	COLD TRANS	7.31	136.43	495.2	4.06	12.11
					COLD STAB	7.18	172.32	468.0	2.22	11.65
IDLE HC,PPM/HEXANE				380.	HOT TRANS	5.03	86.33	449.8	5.23	14.76
IDLE CO,PCT (MEAS)				7.60						
IDLE CO,PCT (SPEC)				1.00	1975 FTP	6.62	141.47	468.6	3.42	12.47
OTHER TESTS: THE 5 SHORT CYCLE TESTS										
0424	1970	BUIC	SKYL	350	COLD TRANS	13.38	218.05	483.7	2.41	10.22
					COLD STAB	12.56	246.43	359.9	1.48	11.28
IDLE HC,PPM/HEXANE				825.	HOT TRANS	7.82	92.32	455.9	3.41	14.18
IDLE CO,PCT (MEAS)				6.70						
IDLE CO,PCT (SPEC)				1.00	1975 FTP	11.44	198.54	411.6	2.20	11.68
OTHER TESTS: THE 5 SHORT CYCLE TESTS										
0425	1970	CADI	DEVI	472	COLD TRANS	5.31	77.78	932.2	3.99	8.29
					COLD STAB	2.62	33.20	839.5	2.64	9.86
IDLE HC,PPM/HEXANE				40.	HOT TRANS	2.57	30.40	767.7	3.81	10.78
IDLE CO,PCT (MEAS)				1.00						
IDLE CO,PCT (SPEC)				1.30	1975 FTP	3.16	41.61	839.0	3.24	9.71
OTHER TESTS: THE 5 SHORT CYCLE TESTS										
0426	1970	CHEV	CAMA	307	COLD TRANS	4.64	42.66	531.7	7.21	14.47
					COLD STAB	4.13	42.50	539.5	4.19	14.33
IDLE HC,PPM/HEXANE				50.	HOT TRANS	3.36	25.29	489.9	7.36	16.43
IDLE CO,PCT (MEAS)				.48						
IDLE CO,PCT (SPEC)				1.30	1975 FTP	4.02	37.84	524.4	5.67	14.88
OTHER TESTS: THE 5 SHORT CYCLE TESTS										

EMISSION RESULTS IN GRAMS PER MILE
FUEL ECONOMY IN MILES PER GALLON

APPENDIX E

LISTING OF FEDERAL TEST PROCEDURE RESULTS ON INDIVIDUAL VEHICLES

ST. LOUIS

VEHICLE NUMBER	YEAR	MAKE	MODEL	CID	TEST TYPE	HC	CO	CO2	NOXC	FUEL ECONOMY
0427	1970	CHEV	STAW	350	COLD TRANS	4.84	67.18	565.4	5.86	12.93
					COLD STAB	4.11	76.64	524.0	3.55	13.50
IDLE HC,PPM/HEXANE				127.	HOT TRANS	3.57	45.02	487.7	5.83	15.58
IDLE CO,PCT (MEAS)				2.40						
IDLE CO,PCT (SPEC)				1.30	1975 FTP	4.11	66.07	522.6	4.65	13.88
OTHER TESTS: THE 5 SHORT CYCLE TESTS										
0428	1970	CHEV	IMPA	400	COLD TRANS	6.64	185.74	514.7	2.83	10.72
					COLD STAB	3.87	52.09	606.3	3.73	12.67
IDLE HC,PPM/HEXANE				225.	HOT TRANS	3.05	29.73	540.8	6.29	14.86
IDLE CO,PCT (MEAS)				2.90						
IDLE CO,PCT (SPEC)				1.30	1975 FTP	4.22	73.50	569.6	4.25	12.71
OTHER TESTS: THE 5 SHORT CYCLE TESTS										
0429	1970	CHRY	STAW	383	COLD TRANS	5.30	81.25	681.4	6.41	10.75
					COLD STAB	3.40	44.02	690.8	4.66	11.52
IDLE HC,PPM/HEXANE				110.	HOT TRANS	3.26	30.13	620.8	7.12	13.08
IDLE CO,PCT (MEAS)				1.85						
IDLE CO,PCT (SPEC)				.80	1975 FTP	3.75	47.90	669.8	5.69	11.73
OTHER TESTS: THE 5 SHORT CYCLE TESTS										
0430	1970	DODG	CHAR	318	COLD TRANS	19.97	399.41	337.9	.44	8.63
					COLD STAB	19.71	423.12	354.8	.38	8.20
IDLE HC,PPM/HEXANE				218.	HOT TRANS	6.88	169.37	395.4	1.54	12.99
IDLE CO,PCT (MEAS)				2.15						
IDLE CO,PCT (SPEC)				.80	1975 FTP	16.26	349.01	362.4	.71	9.22
OTHER TESTS: THE 5 SHORT CYCLE TESTS										
0431	1970	FORD	MAVE	200	COLD TRANS	1.93	19.38	454.5	4.78	18.07
					COLD STAB	2.16	16.61	415.7	3.64	19.78
IDLE HC,PPM/HEXANE				83.	HOT TRANS	2.57	13.68	366.4	4.94	22.41
IDLE CO,PCT (MEAS)				.75						
IDLE CO,PCT (SPEC)				.80	1975 FTP	2.23	16.38	410.2	4.23	20.03
OTHER TESTS: THE 5 SHORT CYCLE TESTS										

EMISSION RESULTS IN GRAMS PER MILE
FUEL ECONOMY IN MILES PER GALLON

APPENDIX E

LISTING OF FEDERAL TEST PROCEDURE RESULTS ON INDIVIDUAL VEHICLES

ST. LOUIS

VEHICLE NUMBER	YEAR	MAKE	MODEL	CID	TEST TYPE	HC	CO	CO2	NOXC	FUEL ECONOMY
0432	1970	FORD	GALA	351	COLD TRANS	5.18	91.44	627.2	3.84	11.27
					COLD STAB	4.29	88.22	673.1	3.54	10.75
IDLE HC,PPM/HEXANE				7.	HOT TRANS	3.36	43.10	641.8	5.56	12.32
IDLE CO,PCT (MEAS)				.08						
IDLE CO,PCT (SPEC)				2.00	1975 FTP	4.22	76.57	655.1	4.15	11.25
OTHER TESTS: THE 5 SHORT CYCLE TESTS										
0433	1970	FORD	LTD	390	COLD TRANS	4.38	54.31	616.9	5.72	12.39
					COLD STAB	4.59	79.83	542.3	2.96	13.01
IDLE HC,PPM/HEXANE				205.	HOT TRANS	4.12	48.20	504.3	5.98	14.96
IDLE CO,PCT (MEAS)				2.40						
IDLE CO,PCT (SPEC)				1.00	1975 FTP	4.42	65.95	547.3	4.35	13.35
OTHER TESTS: THE 5 SHORT CYCLE TESTS										
0434	1970	OLDS	DELT	350	COLD TRANS	4.23	80.61	650.7	3.40	11.22
					COLD STAB	2.82	42.41	672.5	2.40	11.86
IDLE HC,PPM/HEXANE				128.	HOT TRANS	2.96	38.06	592.0	3.36	13.42
IDLE CO,PCT (MEAS)				1.45						
IDLE CO,PCT (SPEC)				.80	1975 FTP	3.15	49.08	646.0	2.87	12.11
OTHER TESTS: THE 5 SHORT CYCLE TESTS										
0435	1970	PLYM	SATE	318	COLD TRANS	8.07	122.98	452.8	3.66	13.22
					COLD STAB	6.41	111.38	451.1	2.60	13.73
IDLE HC,PPM/HEXANE				475.	HOT TRANS	5.43	65.33	430.0	5.00	16.14
IDLE CO,PCT (MEAS)				6.75						
IDLE CO,PCT (SPEC)				.50	1975 FTP	6.48	101.20	445.7	3.47	14.20
OTHER TESTS: THE 5 SHORT CYCLE TESTS										
0436	1970	PONT	GRNP	400	COLD TRANS	6.72	118.78	637.2	5.86	10.50
					COLD STAB	4.76	34.94	667.0	3.13	12.04
IDLE HC,PPM/HEXANE				450.	HOT TRANS	5.17	12.80	530.0	6.43	15.67
IDLE CO,PCT (MEAS)				.15						
IDLE CO,PCT (SPEC)				1.00	1975 FTP	5.27	46.15	623.5	4.59	12.45
OTHER TESTS: THE 5 SHORT CYCLE TESTS										

EMISSION RESULTS IN GRAMS PER MILE
FUEL ECONOMY IN MILES PER GALLON

APPENDIX E

LISTING OF FEDERAL TEST PROCEDURE RESULTS ON INDIVIDUAL VEHICLES

ST. LOUIS

VEHICLE NUMBER	YEAR	MAKE	MODEL	CID	TEST TYPE	HC	CO	CO2	NOXC	FUEL ECONOMY
0437	1970	VOLK	SEDA	97	COLD TRANS	3.64	44.58	287.0	3.43	24.08
					COLD STAB	3.78	45.48	306.1	1.63	22.78
IDLE HC,PPM/HEXANE				220.	HOT TRANS	2.73	32.05	260.0	2.90	27.82
IDLE CO,PCT (MEAS)				5.10						
IDLE CO,PCT (SPEC)				2.00	1975 FTP	3.47	41.63	289.6	2.34	24.25
OTHER TESTS: THE 5 SHORT CYCLE TESTS										
9438	1969	AMC	RAMB	199	COLD TRANS	9.08	75.50	408.9	3.01	15.95
					COLD STAB	6.18	86.44	410.0	1.90	15.70
IDLE HC,PPM/HEXANE				32.	HOT TRANS	4.91	62.99	354.4	2.88	18.93
IDLE CO,PCT (MEAS)				.45						
IDLE CO,PCT (SPEC)				99.99	1975 FTP	6.43	77.79	394.6	2.40	16.52
OTHER TESTS: THE 5 SHORT CYCLE TESTS										
9439	1969	BUIC	WILD	430	COLD TRANS	8.03	158.92	576.9	7.87	10.42
					COLD STAB	7.96	139.49	545.9	4.13	11.23
IDLE HC,PPM/HEXANE				450.	HOT TRANS	5.23	65.21	528.9	9.12	13.70
IDLE CO,PCT (MEAS)				6.00						
IDLE CO,PCT (SPEC)				1.50	1975 FTP	7.23	123.22	547.6	6.26	11.61
OTHER TESTS: THE 5 SHORT CYCLE TESTS										
9440	1969	BUIC	SPEC	350	COLD TRANS	5.29	74.21	501.1	5.37	13.99
					COLD STAB	6.07	103.98	474.2	2.76	13.51
IDLE HC,PPM/HEXANE				550.	HOT TRANS	5.12	53.98	452.1	6.01	16.04
IDLE CO,PCT (MEAS)				5.80						
IDLE CO,PCT (SPEC)				1.50	1975 FTP	5.65	84.21	473.7	4.19	14.22
OTHER TESTS: THE 5 SHORT CYCLE TESTS										
9441	1969	CADI	DEVI	472	COLD TRANS	3.05	82.91	795.3	4.75	9.49
					COLD STAB	1.79	25.21	774.6	3.29	10.83
IDLE HC,PPM/HEXANE				95.	HOT TRANS	1.77	19.58	691.8	5.41	12.19
IDLE CO,PCT (MEAS)				.35						
IDLE CO,PCT (SPEC)				1.20	1975 FTP	2.05	35.55	756.3	4.17	10.84
OTHER TESTS: THE 5 SHORT CYCLE TESTS										

EMISSION RESULTS IN GRAMS PER MILE
FUEL ECONOMY IN MILES PER GALLON

APPENDIX E

LISTING OF FEDERAL TEST PROCEDURE RESULTS ON INDIVIDUAL VEHICLES

ST. LOUIS

VEHICLE NUMBER	YEAR	MAKE	MODEL	CID	TEST TYPE	HC	CO	CO2	NOXC	FUEL ECONOMY
9442	1969	CHEV	NOVA	307	COLD TRANS	4.31	75.29	500.9	5.64	14.02
					COLD STAB	3.69	60.98	473.9	4.21	15.26
IDLE HC,PPM/HEXANE			285.		HOT TRANS	3.44	42.72	438.3	6.10	17.19
IDLE CO,PCT (MEAS)			4.30							
IDLE CO,PCT (SPEC)			1.50		1975 FTP	3.75	58.94	469.7	5.02	15.46
OTHER TESTS: THE 5 SHORT CYCLE TESTS										
9443	1969	CHEV	IMPA	350	COLD TRANS	5.98	121.17	462.0	6.47	13.22
					COLD STAB	4.38	61.78	481.0	5.85	14.99
IDLE HC,PPM/HEXANE			280.		HOT TRANS	3.37	29.48	442.8	9.48	17.76
IDLE CO,PCT (MEAS)			4.50							
IDLE CO,PCT (SPEC)			2.00		1975 FTP	4.44	65.19	466.7	6.97	15.22
OTHER TESTS: THE 5 SHORT CYCLE TESTS										
9444	1969	CHEV	CAMA	307	COLD TRANS	3.92	41.59	496.3	4.29	15.46
					COLD STAB	3.87	55.76	543.8	2.25	13.79
IDLE HC,PPM/HEXANE			95.		HOT TRANS	3.53	41.25	438.3	3.38	17.26
IDLE CO,PCT (MEAS)			2.20							
IDLE CO,PCT (SPEC)			1.50		1975 FTP	3.79	48.89	505.2	2.98	14.94
OTHER TESTS: THE 5 SHORT CYCLE TESTS										
9445	1969	CHEV	IMPA	327	COLD TRANS	7.63	135.23	595.0	2.65	10.67
					COLD STAB	5.27	105.47	600.1	1.94	11.34
IDLE HC,PPM/HEXANE			425.		HOT TRANS	4.65	61.58	570.6	3.42	13.01
IDLE CO,PCT (MEAS)			6.20							
IDLE CO,PCT (SPEC)			1.50		1975 FTP	5.58	99.62	591.0	2.49	11.60
OTHER TESTS: THE 5 SHORT CYCLE TESTS										
9446	1969	CHEV	ELCA	350	COLD TRANS	10.45	167.39	412.1	3.34	12.53
					COLD STAB	8.58	130.47	401.5	2.80	14.00
IDLE HC,PPM/HEXANE			460.		HOT TRANS	6.79	72.72	389.0	4.78	16.91
IDLE CO,PCT (MEAS)			5.50							
IDLE CO,PCT (SPEC)			1.50		1975 FTP	8.48	122.31	400.3	3.45	14.33
OTHER TESTS: THE 5 SHORT CYCLE TESTS										

EMISSION RESULTS IN GRAMS PER MILE
FUEL ECONOMY IN MILES PER GALLON

APPENDIX E

LISTING OF FEDERAL TEST PROCEDURE RESULTS ON INDIVIDUAL VEHICLES

ST. LOUIS

VEHICLE NUMBER	YEAR	MAKE	MODEL	CID	TEST TYPE	HC	CO	CO2	NOXC	FUEL ECONOMY
9447	1969	CHEV	NOVA	250	COLD TRANS	4.79	54.37	452.2	5.92	16.05
					COLD STAB	3.51	33.65	480.8	3.92	16.29
IDLE HC,PPM/HEXANE				52.	HOT TRANS	3.39	26.02	399.8	6.43	19.66
IDLE CO,PCT (MEAS)				.72						
IDLE CO,PCT (SPEC)				1.50	1975 FTP	3.74	35.83	452.8	5.02	17.04
OTHER TESTS: THE 5 SHORT CYCLE TESTS										
9448	1969	CHEV	BELA	350	COLD TRANS	8.70	139.06	536.1	5.97	11.35
					COLD STAB	5.87	172.27	520.6	.77	10.96
IDLE HC,PPM/HEXANE				95.	HOT TRANS	4.75	79.29	487.6	4.52	14.15
IDLE CO,PCT (MEAS)				.75						
IDLE CO,PCT (SPEC)				1.50	1975 FTP	6.15	140.07	514.8	2.86	11.77
OTHER TESTS: THE 5 SHORT CYCLE TESTS										
9449	1969	CHRY	NEWP	383	COLD TRANS	7.63	208.73	560.2	1.41	9.73
					COLD STAB	2.56	47.89	616.4	1.70	12.68
IDLE HC,PPM/HEXANE				138.	HOT TRANS	2.46	27.97	551.5	2.94	14.71
IDLE CO,PCT (MEAS)				.50						
IDLE CO,PCT (SPEC)				1.60	1975 FTP	3.58	75.56	587.1	1.98	12.38
OTHER TESTS: THE 5 SHORT CYCLE TESTS										
9450	1969	DODG	POLA	318	COLD TRANS	8.57	142.35	474.9	4.07	12.23
					COLD STAB	3.64	56.11	493.5	3.25	14.96
IDLE HC,PPM/HEXANE				60.	HOT TRANS	4.43	76.64	418.7	3.66	16.04
IDLE CO,PCT (MEAS)				.11						
IDLE CO,PCT (SPEC)				1.60	1975 FTP	4.87	79.46	469.3	3.53	14.56
OTHER TESTS: THE 5 SHORT CYCLE TESTS										
9451	1969	FORD	LTD	390	COLD TRANS	6.22	98.12	717.6	3.12	9.96
					COLD STAB	3.66	46.47	701.7	2.70	11.29
IDLE HC,PPM/HEXANE				20.	HOT TRANS	3.19	26.18	640.5	3.88	12.83
IDLE CO,PCT (MEAS)				.22						
IDLE CO,PCT (SPEC)				1.60	1975 FTP	4.06	51.57	688.3	3.11	11.35
OTHER TESTS: THE 5 SHORT CYCLE TESTS										

EMISSION RESULTS IN GRAMS PER MILE
FUEL ECONOMY IN MILES PER GALLON

APPENDIX E

LISTING OF FEDERAL TEST PROCEDURE RESULTS ON INDIVIDUAL VEHICLES

ST. LOUIS

VEHICLE NUMBER	YEAR	MAKE	MODEL	CID	TEST TYPE	HC	CO	CO2	NOXC	FUEL ECONOMY
9452	1969	FORD	FALC	302	COLD TRANS	4.60	42.20	459.1	5.69	16.44
					COLD STAB	3.27	18.41	473.2	3.61	17.32
IDLE HC,PPM/HEXANE			175.		HOT TRANS	4.05	11.31	409.6	6.65	20.16
IDLE CO,PCT (MEAS)			.08							
IDLE CO,PCT (SPEC)			1.80		1975 FTP	3.75	21.37	453.0	4.87	17.81
OTHER TESTS: THE 5 SHORT CYCLE TESTS										
9453	1969	FORD	GALA	351	COLD TRANS	4.14	78.25	612.2	3.45	11.86
					COLD STAB	2.84	58.29	642.4	3.18	11.95
IDLE HC,PPM/HEXANE			280.		HOT TRANS	3.89	41.50	558.1	4.39	13.96
IDLE CO,PCT (MEAS)			4.55							
IDLE CO,PCT (SPEC)			1.60		1975 FTP	3.40	57.82	613.2	3.57	12.42
OTHER TESTS: THE 5 SHORT CYCLE TESTS										
9454	1969	FORD	LTD	390	COLD TRANS	4.17	48.83	735.5	3.99	10.75
					COLD STAB	3.10	35.74	738.7	2.44	11.03
IDLE HC,PPM/HEXANE			205.		HOT TRANS	3.19	38.27	623.8	3.31	12.79
IDLE CO,PCT (MEAS)			.75							
IDLE CO,PCT (SPEC)			1.60		1975 FTP	3.34	39.13	706.7	3.00	11.40
OTHER TESTS: THE 5 SHORT CYCLE TESTS										
9455	1969	FORD	FAIR	302	COLD TRANS	5.36	68.38	501.0	9.03	14.19
					COLD STAB	3.96	24.80	866.5	6.47	9.67
IDLE HC,PPM/HEXANE			295.		HOT TRANS	3.33	18.80	437.7	9.79	18.58
IDLE CO,PCT (MEAS)			3.10							
IDLE CO,PCT (SPEC)			1.80		1975 FTP	4.07	32.13	674.3	7.90	12.03
OTHER TESTS: THE 5 SHORT CYCLE TESTS										
9456	1969	FORD	THUN	429	COLD TRANS	5.80	96.08	598.9	7.30	11.55
					COLD STAB	3.08	16.52	639.1	4.73	13.15
IDLE HC,PPM/HEXANE			150.		HOT TRANS	3.08	10.99	570.6	8.82	14.85
IDLE CO,PCT (MEAS)			.10							
IDLE CO,PCT (SPEC)			1.60		1975 FTP	3.64	31.39	612.1	6.37	13.19
OTHER TESTS: THE 5 SHORT CYCLE TESTS										

EMISSION RESULTS IN GRAMS PER MILE
FUEL ECONOMY IN MILES PER GALLON

APPENDIX E

LISTING OF FEDERAL TEST PROCEDURE RESULTS ON INDIVIDUAL VEHICLES

ST. LOUIS

VEHICLE NUMBER	YEAR	MAKE	MODEL	CID	TEST TYPE	HC	CO	CO2	NOXC	FUEL ECONOMY
9457	1969	MERC	MONG	351	COLD TRANS	3.20	43.60	702.9	3.35	11.36
					COLD STAB	2.87	66.05	627.1	1.38	11.99
IDLE HC,PPM/HEXANE				95.	HOT TRANS	2.42	30.90	532.0	2.36	15.09
IDLE CO,PCT (MEAS)				1.65						
IDLE CO,PCT (SPEC)				1.60	1975 FTP	2.81	51.84	616.8	2.05	12.55
OTHER TESTS: THE 5 SHORT CYCLE TESTS										
9458	1969	OLDS	98	455	COLD TRANS	4.24	58.16	717.3	3.90	10.80
					COLD STAB	3.18	35.07	731.3	2.35	11.14
IDLE HC,PPM/HEXANE				40.	HOT TRANS	3.53	22.04	639.9	3.88	12.94
IDLE CO,PCT (MEAS)				.32						
IDLE CO,PCT (SPEC)				1.60	1975 FTP	3.50	36.27	703.5	3.09	11.50
OTHER TESTS: THE 5 SHORT CYCLE TESTS										
9459	1969	OLDS	CUTL	350	COLD TRANS	4.83	31.43	580.5	8.20	13.75
					COLD STAB	4.55	17.93	606.1	4.92	13.68
IDLE HC,PPM/HEXANE				142.	HOT TRANS	4.37	12.73	524.0	8.28	15.91
IDLE CO,PCT (MEAS)				.34						
IDLE CO,PCT (SPEC)				1.60	1975 FTP	4.56	19.29	578.4	6.51	14.24
OTHER TESTS: THE 5 SHORT CYCLE TESTS										
9460	1969	PLYM	SATE	318	COLD TRANS	7.97	82.17	545.8	7.79	12.68
					COLD STAB	9.49	150.08	485.0	4.45	11.82
IDLE HC,PPM/HEXANE				165.	HOT TRANS	6.56	85.69	459.3	6.80	14.44
IDLE CO,PCT (MEAS)				2.25						
IDLE CO,PCT (SPEC)				1.60	1975 FTP	8.38	118.53	490.5	5.78	12.62
OTHER TESTS: THE 5 SHORT CYCLE TESTS										
9461	1969	PLYM	VALI	225	COLD TRANS	42.59	134.61	362.2	4.60	12.52
					COLD STAB	38.00	140.31	338.1	2.39	13.07
IDLE HC,PPM/HEXANE				2000.	HOT TRANS	30.61	78.91	344.1	5.17	15.70
IDLE CO,PCT (MEAS)				4.90						
IDLE CO,PCT (SPEC)				1.60	1975 FTP	36.93	122.38	344.7	3.60	13.57
OTHER TESTS: THE 5 SHORT CYCLE TESTS										

EMISSION RESULTS IN GRAMS PER MILE
FUEL ECONOMY IN MILES PER GALLON

APPENDIX E

LISTING OF FEDERAL TEST PROCEDURE RESULTS ON INDIVIDUAL VEHICLES

ST. LOUIS

VEHICLE NUMBER	YEAR	MAKE	MODEL	CID	TEST TYPE	HC	CO	CO2	NOXC	FUEL ECONOMY
9462	1969	PONT	LEMA	350	COLD TRANS	7.92	177.88	495.2	5.25	11.10
					COLD STAB	3.96	75.84	527.8	4.38	13.46
IDLE HC,PPM/HEXANE				85.	HOT TRANS	3.43	39.98	473.5	8.83	16.22
IDLE CO,PCT (MEAS)				1.55						
IDLE CO,PCT (SPEC)				1.30	1975 FTP	4.63	87.06	506.3	5.77	13.49
OTHER TESTS: THE 5 SHORT CYCLE TESTS										
9463	1969	PONT	CATA	400	COLD TRANS	17.57	272.60	440.3	1.52	9.60
					COLD STAB	6.07	164.15	481.5	2.01	11.70
IDLE HC,PPM/HEXANE				96.	HOT TRANS	6.08	104.42	453.3	4.13	13.94
IDLE CO,PCT (MEAS)				1.15						
IDLE CO,PCT (SPEC)				.80	1975 FTP	8.44	170.18	465.4	2.49	11.69
OTHER TESTS: THE 5 SHORT CYCLE TESTS										
9464	1969	PONT	STAW	400	COLD TRANS	8.31	101.70	639.0	7.53	10.76
					COLD STAB	6.86	108.58	598.5	5.67	11.22
IDLE HC,PPM/HEXANE				150.	HOT TRANS	5.18	60.45	540.3	7.67	13.62
IDLE CO,PCT (MEAS)				1.70						
IDLE CO,PCT (SPEC)				1.30	1975 FTP	6.70	94.03	590.9	6.60	11.68
OTHER TESTS: THE 5 SHORT CYCLE TESTS										
9465	1969	TOYO	CORO	116	COLD TRANS	2.11	20.74	360.3	8.26	22.21
					COLD STAB	1.58	30.60	368.1	4.74	21.07
IDLE HC,PPM/HEXANE				25.	HOT TRANS	2.75	19.85	320.5	7.47	24.63
IDLE CO,PCT (MEAS)				.36						
IDLE CO,PCT (SPEC)				99.99	1975 FTP	2.01	25.64	353.5	6.21	22.18
OTHER TESTS: THE 5 SHORT CYCLE TESTS										
9466	1969	VOLK	SEDA	91	COLD TRANS	3.95	48.41	311.9	4.70	22.16
					COLD STAB	4.22	46.09	342.7	2.89	20.71
IDLE HC,PPM/HEXANE				285.	HOT TRANS	3.11	33.91	300.9	4.23	24.38
IDLE CO,PCT (MEAS)				3.10						
IDLE CO,PCT (SPEC)				2.00	1975 FTP	3.86	43.24	324.9	3.63	21.91
OTHER TESTS: THE 5 SHORT CYCLE TESTS										

EMISSION RESULTS IN GRAMS PER MILE
FUEL ECONOMY IN MILES PER GALLON

APPENDIX E

LISTING OF FEDERAL TEST PROCEDURE RESULTS ON INDIVIDUAL VEHICLES

ST. LOUIS

VEHICLE NUMBER	YEAR	MAKE	MODEL	CID	TEST TYPE	HC	CO	CO2	NOXC	FUEL ECONOMY
9467	1969	VOLK	SEDA	91	COLD TRANS	8.35	101.72	235.9	1.80	21.02
					COLD STAB	7.77	107.63	245.2	1.06	20.22
IDLE HC,PPM/HEXANE			1200.		HOT TRANS	14.20	85.32	212.1	1.54	22.69
IDLE CO,PCT (MEAS)			5.90							
IDLE CO,PCT (SPEC)			99.99		1975 FTP	9.65	100.32	234.2	1.34	21.01
OTHER TESTS: THE 5 SHORT CYCLE TESTS										
8468	1966	AMC	STAW	199	COLD TRANS	4.45	40.77	440.6	7.76	17.11
					COLD STAB	3.31	40.76	382.2	4.12	19.43
IDLE HC,PPM/HEXANE			390.		HOT TRANS	3.65	29.86	377.2	6.98	20.37
IDLE CO,PCT (MEAS)			4.80							
IDLE CO,PCT (SPEC)			3.00		1975 FTP	3.64	37.79	392.9	5.65	19.14
OTHER TESTS: THE 5 SHORT CYCLE TESTS										
8469	1968	AMC	RAMB	232	COLD TRANS	3.80	52.48	432.7	6.77	16.83
					COLD STAB	2.58	36.73	414.3	4.75	18.48
IDLE HC,PPM/HEXANE			65.		HOT TRANS	3.52	26.56	401.7	7.37	19.52
IDLE CO,PCT (MEAS)			1.10							
IDLE CO,PCT (SPEC)			2.50		1975 FTP	3.09	37.20	414.6	5.88	18.38
OTHER TESTS: THE 5 SHORT CYCLE TESTS										
8470	1967	AMC	REBE	290	COLD TRANS	11.68	232.65	403.8	14.28	11.01
					COLD STAB	4.36	61.44	451.3	2.71	15.80
IDLE HC,PPM/HEXANE			220.		HOT TRANS	4.62	54.06	430.5	4.66	16.74
IDLE CO,PCT (MEAS)			2.60							
IDLE CO,PCT (SPEC)			1.30		1975 FTP	5.94	94.67	435.8	5.62	14.71
OTHER TESTS: THE 5 SHORT CYCLE TESTS										
8471	1968	BUIC	WILD	430	COLD TRANS	48.28	199.29	575.2	3.63	8.52
					COLD STAB	38.88	136.79	575.0	3.78	9.72
IDLE HC,PPM/HEXANE			620.		HOT TRANS	32.31	96.95	502.1	4.68	11.72
IDLE CO,PCT (MEAS)			.95							
IDLE CO,PCT (SPEC)			1.30		1975 FTP	39.02	138.79	555.2	3.99	9.89
OTHER TESTS: THE 5 SHORT CYCLE TESTS										

EMISSION RESULTS IN GRAMS PER MILE
FUEL ECONOMY IN MILES PER GALLON

APPENDIX E

LISTING OF FEDERAL TEST PROCEDURE RESULTS ON INDIVIDUAL VEHICLES

ST. LOUIS

VEHICLE NUMBER	YEAR	MAKE	MODEL	CID	TEST TYPE	HC	CO	CO2	NOXC	FUEL ECONOMY
8472	1968	BUIC	ELEC	430	COLD TRANS	7.88	104.33	615.3	10.99	11.04
					COLD STAB	10.09	117.11	537.7	6.96	11.77
IDLE HC,PPM/HEXANE				80.	HOT TRANS	7.10	63.11	537.0	11.73	13.48
IDLE CO,PCT (MEAS)				.80						
IDLE CO,PCT (SPEC)				1.30	1975 FTP	8.82	99.74	553.5	9.09	12.02
OTHER TESTS: THE 5 SHORT CYCLE TESTS										
8473	1968	BUIC	LESA	350	COLD TRANS	8.78	17.98	557.5	5.72	14.46
					COLD STAB	3.48	44.22	576.3	3.36	13.51
IDLE HC,PPM/HEXANE				270.	HOT TRANS	3.39	39.81	490.4	6.58	15.75
IDLE CO,PCT (MEAS)				3.80						
IDLE CO,PCT (SPEC)				1.30	1975 FTP	4.55	37.62	549.0	4.72	14.26
OTHER TESTS: THE 5 SHORT CYCLE TESTS										
8474	1966	CADI	DEVI	429	COLD TRANS	15.19	270.20	510.7	1.33	9.02
					COLD STAB	12.25	268.80	500.8	.78	9.23
IDLE HC,PPM/HEXANE				525.	HOT TRANS	11.75	246.01	465.7	1.01	9.98
IDLE CO,PCT (MEAS)				7.10						
IDLE CO,PCT (SPEC)				2.80	1975 FTP	12.72	262.87	493.2	.96	9.38
OTHER TESTS: THE 5 SHORT CYCLE TESTS										
8475	1968	CHEV	CHEL	230	COLD TRANS	3.42	36.36	447.1	6.96	17.23
					COLD STAB	2.60	14.20	415.4	5.66	19.90
IDLE HC,PPM/HEXANE				270.	HOT TRANS	2.49	10.84	393.1	6.87	21.23
IDLE CO,PCT (MEAS)				1.00						
IDLE CO,PCT (SPEC)				1.50	1975 FTP	2.74	17.84	415.9	6.26	19.61
OTHER TESTS: THE 5 SHORT CYCLE TESTS										
8476	1967	CHEV	CHEL	283	COLD TRANS	32.83	123.15	377.4	3.19	13.15
					COLD STAB	34.47	176.38	317.4	.90	12.61
IDLE HC,PPM/HEXANE				2000.	HOT TRANS	27.02	133.97	322.1	2.04	14.35
IDLE CO,PCT (MEAS)				5.50						
IDLE CO,PCT (SPEC)				2.20	1975 FTP	32.10	153.85	331.0	1.68	13.16
OTHER TESTS: THE 5 SHORT CYCLE TESTS										

EMISSION RESULTS IN GRAMS PER MILE
FUEL ECONOMY IN MILES PER GALLON

APPENDIX E

LISTING OF FEDERAL TEST PROCEDURE RESULTS ON INDIVIDUAL VEHICLES

ST. LOUIS

VEHICLE NUMBER	YEAR	MAKE	MODEL	CID	TEST TYPE	HC	CO	CO2	NOXC	FUEL ECONOMY
8477	1967	CHEV	IMPA	283	COLD TRANS	8.29	104.60	471.1	4.10	13.41
					COLD STAB	8.22	116.10	420.6	2.11	14.11
IDLE HC.PPM/HEXANE			615.		HOT TRANS	6.69	79.36	426.2	4.02	15.51
IDLE CO.PCT (MEAS)			6.45							
IDLE CO.PCT (SPEC)			2.20		1975 FTP	7.82	103.71	432.5	3.04	14.31
OTHER TESTS: THE 5 SHORT CYCLE TESTS										
8478	1968	CHEV	IMPA	327	COLD TRANS	17.17	191.56	436.7	2.33	11.20
					COLD STAB	17.18	164.32	405.9	1.05	12.35
IDLE HC.PPM/HEXANE			1500.		HOT TRANS	11.38	110.60	404.1	2.57	14.45
IDLE CO.PCT (MEAS)			7.70							
IDLE CO.PCT (SPEC)			2.00		1975 FTP	15.59	155.27	411.8	1.73	12.59
OTHER TESTS: THE 5 SHORT CYCLE TESTS										
8479	1966	CHEV	IMPA	327	COLD TRANS	55.44	294.57	491.0	.92	7.86
					COLD STAB	39.49	148.04	528.4	1.29	10.01
IDLE HC.PPM/HEXANE			190.		HOT TRANS	42.27	163.45	471.9	1.27	10.29
IDLE CO.PCT (MEAS)			.23							
IDLE CO.PCT (SPEC)			3.00		1975 FTP	43.53	182.41	505.3	1.21	9.54
OTHER TESTS: THE 5 SHORT CYCLE TESTS										
8480	1968	CHEV	IMPA	396	COLD TRANS	8.20	172.51	515.5	1.65	10.92
					COLD STAB	7.82	245.51	460.6	.43	10.19
IDLE HC.PPM/HEXANE			300.		HOT TRANS	7.15	205.96	426.4	.63	11.49
IDLE CO.PCT (MEAS)			4.90							
IDLE CO.PCT (SPEC)			2.00		1975 FTP	7.72	219.69	462.5	.73	10.66
OTHER TESTS: THE 5 SHORT CYCLE TESTS										
8481	1966	CHEV	CHEL	283	COLD TRANS	13.04	164.35	395.8	3.05	12.76
					COLD STAB	18.15	189.22	333.6	1.12	12.89
IDLE HC.PPM/HEXANE			870.		HOT TRANS	11.83	119.90	361.4	3.43	15.11
IDLE CO.PCT (MEAS)			5.60							
IDLE CO.PCT (SPEC)			3.00		1975 FTP	15.38	165.19	354.0	2.15	13.40
OTHER TESTS: THE 5 SHORT CYCLE TESTS										

EMISSION RESULTS IN GRAMS PER MILE
FUEL ECONOMY IN MILES PER GALLON

APPENDIX E

LISTING OF FEDERAL TEST PROCEDURE RESULTS ON INDIVIDUAL VEHICLES

ST. LOUIS

VEHICLE NUMBER	YEAR	MAKE	MODEL	CID	TEST TYPE	HC	CO	CO2	NOXC	FUEL ECONOMY
8482	1967	CHEV	CAMA	250	COLD TRANS	9.12	138.93	360.0	2.87	14.61
					COLD STAB	8.10	88.75	342.7	2.31	17.47
IDLE HC,PPM/HEXANE			800.		HOT TRANS	6.35	64.66	338.5	4.00	19.28
IDLE CO,PCT (MEAS)			6.30							
IDLE CO,PCT (SPEC)			2.20		1975 FTP	7.83	92.51	345.1	2.89	17.22
OTHER TESTS: THE 5 SHORT CYCLE TESTS										
8483	1968	CHEV	CHEL	307	COLD TRANS	6.70	31.75	513.5	10.43	15.18
					COLD STAB	7.47	46.61	463.8	6.24	15.83
IDLE HC,PPM/HEXANE			1000.		HOT TRANS	5.68	26.21	464.3	9.89	16.95
IDLE CO,PCT (MEAS)			4.90							
IDLE CO,PCT (SPEC)			1.50		1975 FTP	6.82	37.99	474.2	8.10	15.98
OTHER TESTS: THE 5 SHORT CYCLE TESTS										
8484	1968	CHEV	CHEL	318	COLD TRANS	12.11	197.86	459.5	1.08	10.97
					COLD STAB	7.13	112.65	468.5	1.13	13.28
IDLE HC,PPM/HEXANE			690.		HOT TRANS	7.33	105.95	426.6	1.57	14.40
IDLE CO,PCT (MEAS)			5.50							
IDLE CO,PCT (SPEC)			1.50		1975 FTP	8.21	128.36	455.2	1.24	13.00
OTHER TESTS: THE 5 SHORT CYCLE TESTS										
8485	1968	CHEV	IMPA	327	COLD TRANS	9.58	160.36	512.2	3.34	11.17
					COLD STAB	7.41	131.39	491.0	1.69	12.31
IDLE HC,PPM/HEXANE			430.		HOT TRANS	6.14	80.51	469.3	3.90	14.42
IDLE CO,PCT (MEAS)			6.10							
IDLE CO,PCT (SPEC)			2.00		1975 FTP	7.51	123.47	489.5	2.63	12.55
OTHER TESTS: THE 5 SHORT CYCLE TESTS										
8486	1968	CHEV	IMPA	302	COLD TRANS	9.06	97.14	500.1	7.74	13.02
					COLD STAB	7.09	51.13	448.6	6.37	16.10
IDLE HC,PPM/HEXANE			810.		HOT TRANS	5.86	37.43	453.4	8.44	16.72
IDLE CO,PCT (MEAS)			4.90							
IDLE CO,PCT (SPEC)			1.50		1975 FTP	7.16	56.86	460.5	7.21	15.50
OTHER TESTS: THE 5 SHORT CYCLE TESTS										

EMISSION RESULTS IN GRAMS PER MILE
FUEL ECONOMY IN MILES PER GALLON

APPENDIX E

LISTING OF FEDERAL TEST PROCEDURE RESULTS ON INDIVIDUAL VEHICLES

ST. LOUIS

VEHICLE NUMBER	YEAR	MAKE	MODEL	CID	TEST TYPE	HC	CO	CO2	NOXC	FUEL ECONOMY
8487	1968	CHRY	NEWP	383	COLD TRANS	10.21	175.06	525.4	3.20	10.66
					COLD STAB	4.47	83.20	596.0	2.98	11.98
IDLE HC,PPM/HEXANE			130.		HOT TRANS	4.13	50.07	533.2	5.38	14.20
IDLE CO,PCT (MEAS)			2.40							
IDLE CO,PCT (SPEC)			1.90		1975 FTP	5.56	93.07	564.3	3.68	12.19
OTHER TESTS: THE 5 SHORT CYCLE TESTS										
8488	1967	DODG	DART	225	COLD TRANS	11.46	183.20	363.8	1.73	12.90
					COLD STAB	6.52	134.55	339.1	.85	15.54
IDLE HC,PPM/HEXANE			470.		HOT TRANS	7.30	125.89	332.1	1.54	16.05
IDLE CO,PCT (MEAS)			4.15							
IDLE CO,PCT (SPEC)			99.99		1975 FTP	7.75	142.20	342.3	1.22	15.04
OTHER TESTS: THE 5 SHORT CYCLE TESTS										
8489	1968	DODG	CORO	318	COLD TRANS	9.50	152.87	456.7	3.15	12.21
					COLD STAB	4.42	46.45	489.4	2.96	15.40
IDLE HC,PPM/HEXANE			87.		HOT TRANS	4.92	54.51	436.3	4.19	16.51
IDLE CO,PCT (MEAS)			.08							
IDLE CO,PCT (SPEC)			1.30		1975 FTP	5.60	70.55	468.2	3.33	14.87
OTHER TESTS: THE 5 SHORT CYCLE TESTS										
8490	1968	DODG	MONA	383	COLD TRANS	5.38	141.54	639.2	1.83	10.10
					COLD STAB	4.43	68.55	746.9	1.73	10.22
IDLE HC,PPM/HEXANE			80.		HOT TRANS	4.68	84.06	572.3	2.07	12.34
IDLE CO,PCT (MEAS)			.20							
IDLE CO,PCT (SPEC)			1.90		1975 FTP	4.69	87.81	677.1	1.84	10.69
OTHER TESTS: THE 5 SHORT CYCLE TESTS										
8491	1967	FORD	MUST	289	COLD TRANS	6.18	82.39	452.6	7.15	14.75
					COLD STAB	6.36	124.53	388.5	3.22	14.68
IDLE HC,PPM/HEXANE			320.		HOT TRANS	6.79	67.37	403.6	7.47	16.72
IDLE CO,PCT (MEAS)			5.60							
IDLE CO,PCT (SPEC)			2.00		1975 FTP	6.44	100.26	405.8	5.19	15.20
OTHER TESTS: THE 5 SHORT CYCLE TESTS										

EMISSION RESULTS IN GRAMS PER MILE
FUEL ECONOMY IN MILES PER GALLON

APPENDIX E

LISTING OF FEDERAL TEST PROCEDURE RESULTS ON INDIVIDUAL VEHICLES

ST. LOUIS

VEHICLE NUMBER	YEAR	MAKE	MODEL	CID	TEST TYPE	HC	CO	CO2	NOXC	FUEL ECONOMY
8492	1967	FORD	FAIR	289	COLD TRANS	4.88	64.17	494.4	3.08	14.53
					COLD STAB	5.04	109.30	457.0	1.60	13.77
IDLE HC,PPM/HEXANE				375.	HOT TRANS	4.35	66.64	422.9	2.81	16.39
IDLE CO,PCT (MEAS)				6.40						
IDLE CO,PCT (SPEC)				2.00	1975 FTP	4.82	88.37	455.4	2.23	14.56
OTHER TESTS: THE 5 SHORT CYCLE TESTS										
8493	1966	FORD	FAIR	289	COLD TRANS	6.19	118.45	546.7	2.33	11.79
					COLD STAB	4.79	116.56	499.2	1.37	12.72
IDLE HC,PPM/HEXANE				250.	HOT TRANS	4.10	56.84	436.9	2.97	16.46
IDLE CO,PCT (MEAS)				4.70						
IDLE CO,PCT (SPEC)				2.80	1975 FTP	4.89	100.65	492.0	2.01	13.33
OTHER TESTS: THE 5 SHORT CYCLE TESTS										
8494	1968	FORD	GALA	302	COLD TRANS	6.89	168.07	544.3	3.19	10.69
					COLD STAB	2.86	38.12	609.3	4.08	13.08
IDLE HC,PPM/HEXANE				65.	HOT TRANS	3.86	26.51	521.8	6.83	15.42
IDLE CO,PCT (MEAS)				.85						
IDLE CO,PCT (SPEC)				1.50	1975 FTP	3.96	61.70	572.1	4.65	13.02
OTHER TESTS: THE 5 SHORT CYCLE TESTS										
8495	1968	FORD	TORI	302	COLD TRANS	8.85	33.72	561.1	8.47	13.82
					COLD STAB	9.27	22.90	569.2	5.40	13.99
IDLE HC,PPM/HEXANE				840.	HOT TRANS	6.35	14.83	478.0	8.51	17.02
IDLE CO,PCT (MEAS)				1.10						
IDLE CO,PCT (SPEC)				3.00	1975 FTP	8.38	22.93	542.6	6.88	14.66
OTHER TESTS: THE 5 SHORT CYCLE TESTS										
8496	1968	FORD	GALA	390	COLD TRANS	4.45	75.83	589.2	4.09	12.28
					COLD STAB	3.65	69.42	586.5	2.22	12.55
IDLE HC,PPM/HEXANE				325.	HOT TRANS	3.17	39.56	550.0	4.07	14.26
IDLE CO,PCT (MEAS)				4.85						
IDLE CO,PCT (SPEC)				1.60	1975 FTP	3.68	62.59	577.1	3.11	12.92
OTHER TESTS: THE 5 SHORT CYCLE TESTS										

EMISSION RESULTS IN GRAMS PER MILE
FUEL ECONOMY IN MILES PER GALLON

APPENDIX E

LISTING OF FEDERAL TEST PROCEDURE RESULTS ON INDIVIDUAL VEHICLES

ST. LOUIS

VEHICLE NUMBER	YEAR	MAKE	MODEL	CID	TEST TYPE	HC	CO	CO2	NOXC	FUEL ECONOMY
8497	1967	FORD	MUST	200	COLD TRANS	8.72	187.03	296.8	1.09	14.35
					COLD STAB	3.83	60.84	337.0	2.08	19.95
IDLE HC.PPM/HEXANE				410.	HOT TRANS	3.55	50.12	308.2	3.44	22.29
IDLE CO.PCT (MEAS)				3.60						
IDLE CO.PCT (SPEC)				2.00	1975 FTP	4.76	83.89	320.9	2.25	18.97
OTHER TESTS: THE 5 SHORT CYCLE TESTS										
8498	1967	FORD	GALA	289	COLD TRANS	8.15	132.54	497.7	4.43	12.13
					COLD STAB	7.36	131.65	489.0	2.99	12.34
IDLE HC.PPM/HEXANE				580.	HOT TRANS	6.71	96.48	445.6	4.74	14.35
IDLE CO.PCT (MEAS)				4.00						
IDLE CO.PCT (SPEC)				2.00	1975 FTP	7.34	122.24	478.9	3.76	12.78
OTHER TESTS: THE 5 SHORT CYCLE TESTS										
8499	1967	FORD	MUST	289	COLD TRANS	5.39	84.10	444.3	6.53	14.95
					COLD STAB	5.76	130.94	404.3	3.20	14.13
IDLE HC.PPM/HEXANE				330.	HOT TRANS	4.33	62.76	397.4	6.70	17.41
IDLE CO.PCT (MEAS)				4.85						
IDLE CO.PCT (SPEC)				2.00	1975 FTP	5.29	102.69	410.6	4.84	15.07
OTHER TESTS: THE 5 SHORT CYCLE TESTS										
8500	1966	FORD	GALA	390	COLD TRANS	23.71	327.66	418.9	.56	8.80
					COLD STAB	23.10	256.01	414.6	.56	9.97
IDLE HC.PPM/HEXANE				1850.	HOT TRANS	13.71	159.26	426.8	1.61	12.32
IDLE CO.PCT (MEAS)				5.40						
IDLE CO.PCT (SPEC)				1.30	1975 FTP	20.67	244.36	418.8	.85	10.22
OTHER TESTS: THE 5 SHORT CYCLE TESTS										
8501	1968	FORD	STAW	390	COLD TRANS	7.84	213.51	551.3	2.28	9.74
					COLD STAB	4.00	57.47	625.2	3.47	12.19
IDLE HC.PPM/HEXANE				240.	HOT TRANS	3.93	32.60	552.7	6.14	14.40
IDLE CO.PCT (MEAS)				3.00						
IDLE CO.PCT (SPEC)				2.80	1975 FTP	4.77	82.80	590.2	3.95	12.07
OTHER TESTS: THE 5 SHORT CYCLE TESTS										

EMISSION RESULTS IN GRAMS PER MILE
FUEL ECONOMY IN MILES PER GALLON

APPENDIX E

LISTING OF FEDERAL TEST PROCEDURE RESULTS ON INDIVIDUAL VEHICLES

ST. LOUIS

VEHICLE NUMBER	YEAR	MAKE	MODEL	CID	TEST TYPE	HC	CO	CO2	NOXC	FUEL ECONOMY
8502	1967	LINC	CONT	462	COLD TRANS	10.88	315.10	682.7	1.86	7.32
					COLD STAB	11.09	312.93	559.1	.85	8.17
IDLE HC,PPM/HEXANE				115.	HOT TRANS	9.68	259.08	542.2	1.29	9.06
IDLE CO,PCT (MEAS)				2.50						
IDLE CO,PCT (SPEC)				2.00	1975 FTP	10.66	298.68	579.9	1.18	8.19
OTHER TESTS: THE 5 SHORT CYCLE TESTS										
8503	1967	MERC	COUG	289	COLD TRANS	11.95	196.87	432.3	2.44	11.39
					COLD STAB	8.88	185.84	401.6	.97	12.30
IDLE HC,PPM/HEXANE				650.	HOT TRANS	8.56	92.78	383.7	3.89	15.94
IDLE CO,PCT (MEAS)				4.70						
IDLE CO,PCT (SPEC)				2.00	1975 FTP	9.42	162.72	403.0	2.07	12.89
OTHER TESTS: THE 5 SHORT CYCLE TESTS										
8504	1967	OLDS	CUTL	330	COLD TRANS	34.09	497.83	366.7	.26	7.06
					COLD STAB	15.23	381.97	420.0	.42	8.31
IDLE HC,PPM/HEXANE				310.	HOT TRANS	5.77	93.20	415.6	1.79	15.29
IDLE CO,PCT (MEAS)				4.50						
IDLE CO,PCT (SPEC)				2.20	1975 FTP	16.53	327.03	407.8	.76	9.11
OTHER TESTS: THE 5 SHORT CYCLE TESTS										
8505	1967	OLDS	98	425	COLD TRANS	5.67	155.65	771.1	2.68	8.59
					COLD STAB	4.17	93.46	703.8	1.62	10.27
IDLE HC,PPM/HEXANE				165.	HOT TRANS	3.68	66.67	711.0	2.75	10.73
IDLE CO,PCT (MEAS)				1.60						
IDLE CO,PCT (SPEC)				2.20	1975 FTP	4.35	98.95	719.6	2.15	9.98
OTHER TESTS: THE 5 SHORT CYCLE TESTS										
8506	1968	OLDS	CUTL	350	COLD TRANS	6.52	126.56	545.5	5.13	11.60
					COLD STAB	6.55	128.90	511.5	3.17	12.08
IDLE HC,PPM/HEXANE				500.	HOT TRANS	5.20	83.32	492.6	5.19	13.87
IDLE CO,PCT (MEAS)				6.20						
IDLE CO,PCT (SPEC)				1.00	1975 FTP	6.18	115.98	513.3	4.13	12.41
OTHER TESTS: THE 5 SHORT CYCLE TESTS										

EMISSION RESULTS IN GRAMS PER MILE
FUEL ECONOMY IN MILES PER GALLON

APPENDIX E

LISTING OF FEDERAL TEST PROCEDURE RESULTS ON INDIVIDUAL VEHICLES

ST. LOUIS

VEHICLE NUMBER	YEAR	MAKE	MODEL	CID	TEST TYPE	HC	CO	CO2	NOXC	FUEL ECONOMY
8507	1968	PLYM	FRY3	318	COLD TRANS	6.73	108.64	521.0	7.70	12.45
					COLD STAB	4.07	32.71	569.2	7.08	14.01
IDLE HC,PPM/HEXANE			100.		HOT TRANS	3.62	18.99	510.0	10.80	16.10
IDLE CO,PCT (MEAS)			1.05							
IDLE CO,PCT (SPEC)			1.30		1975 FTP	4.49	44.59	543.2	8.22	14.14
OTHER TESTS: THE 5 SHORT CYCLE TESTS										
8508	1968	PLYM	FRY3	318	COLD TRANS	5.78	107.82	496.0	4.28	12.98
					COLD STAB	4.20	77.48	512.8	4.43	13.70
IDLE HC,PPM/HEXANE			275.		HOT TRANS	3.85	52.63	457.7	2.69	16.06
IDLE CO,PCT (MEAS)			5.40							
IDLE CO,PCT (SPEC)			1.30		1975 FTP	4.43	76.94	494.3	3.92	14.10
OTHER TESTS: THE 5 SHORT CYCLE TESTS										
8509	1968	PLYM	SATE	383	COLD TRANS	15.69	198.65	425.6	2.30	11.27
					COLD STAB	15.63	160.43	418.2	2.25	12.33
IDLE HC,PPM/HEXANE			410.		HOT TRANS	8.06	71.66	452.1	5.88	15.04
IDLE CO,PCT (MEAS)			4.30							
IDLE CO,PCT (SPEC)			1.30		1975 FTP	13.58	144.08	429.0	3.25	12.71
OTHER TESTS: THE 5 SHORT CYCLE TESTS										
8510	1966	PLYM	FRY3	383	COLD TRANS	11.98	221.58	361.2	1.48	11.88
					COLD STAB	4.83	110.36	360.6	1.85	16.16
IDLE HC,PPM/HEXANE			118.		HOT TRANS	4.51	83.19	362.7	3.55	17.48
IDLE CO,PCT (MEAS)			1.33							
IDLE CO,PCT (SPEC)			1.90		1975 FTP	6.21	125.84	361.3	2.24	15.34
OTHER TESTS: THE 5 SHORT CYCLE TESTS										
8511	1968	PONT	BONN	400	COLD TRANS	5.53	88.64	620.6	3.30	11.42
					COLD STAB	4.82	72.71	586.5	1.95	12.40
IDLE HC,PPM/HEXANE			410.		HOT TRANS	4.13	54.21	515.8	3.06	14.45
IDLE CO,PCT (MEAS)			4.20							
IDLE CO,PCT (SPEC)			1.00		1975 FTP	4.77	70.94	574.2	2.53	12.66
OTHER TESTS: THE 5 SHORT CYCLE TESTS										

EMISSION RESULTS IN GRAMS PER MILE
FUEL ECONOMY IN MILES PER GALLON

APPENDIX E

LISTING OF FEDERAL TEST PROCEDURE RESULTS ON INDIVIDUAL VEHICLES

ST. LOUIS

VEHICLE NUMBER	YEAR	MAKE	MODEL	CID	TEST TYPE	HC	CO	CO2	NOXC	FUEL ECONOMY
8512	1966	PONT	CATA	389	COLD TRANS	8.24	79.21	582.6	5.88	12.10
					COLD STAB	9.82	105.47	476.3	2.77	13.18
IDLE HC,PPM/HEXANE			815.		HOT TRANS	7.45	69.30	453.9	4.77	15.13
IDLE CO,PCT (MEAS)			5.82							
IDLE CO,PCT (SPEC)			3.00		1975 FTP	8.85	90.20	492.1	3.96	13.41
OTHER TESTS: THE 5 SHORT CYCLE TESTS										
8513	1968	PONT	TEMP	350	COLD TRANS	5.05	62.32	550.0	5.85	13.37
					COLD STAB	3.63	40.80	549.4	4.02	14.20
IDLE HC,PPM/HEXANE			330.		HOT TRANS	3.49	22.14	497.6	7.17	16.33
IDLE CO,PCT (MEAS)			3.00							
IDLE CO,PCT (SPEC)			1.00		1975 FTP	3.88	40.14	535.4	5.25	14.53
OTHER TESTS: THE 5 SHORT CYCLE TESTS										
8514	1967	PONT	STAW	400	COLD TRANS	8.56	129.19	579.8	6.40	10.96
					COLD STAB	5.21	60.95	552.1	4.67	13.36
IDLE HC,PPM/HEXANE			330.		HOT TRANS	4.25	26.37	541.8	7.42	14.87
IDLE CO,PCT (MEAS)			2.40							
IDLE CO,PCT (SPEC)			2.80		1975 FTP	5.64	65.56	555.0	5.77	13.13
OTHER TESTS: THE 5 SHORT CYCLE TESTS										
8515	1968	PONT	STAW	389	COLD TRANS	10.46	204.73	551.8	3.70	9.79
					COLD STAB	11.44	321.09	537.8	1.45	8.23
IDLE HC,PPM/HEXANE			105.		HOT TRANS	7.86	174.68	474.5	4.11	11.47
IDLE CO,PCT (MEAS)			3.00							
IDLE CO,PCT (SPEC)			1.00		1975 FTP	10.26	257.19	523.4	2.64	9.24
OTHER TESTS: THE 5 SHORT CYCLE TESTS										
8516	1967	VOLK	SEDA	91	COLD TRANS	7.23	114.66	236.1	3.27	20.20
					COLD STAB	9.62	145.46	211.2	1.13	18.87
IDLE HC,PPM/HEXANE			600.		HOT TRANS	6.46	105.03	209.0	2.38	22.50
IDLE CO,PCT (MEAS)			3.40							
IDLE CO,PCT (SPEC)			99.99		1975 FTP	8.27	128.09	215.7	1.91	20.03
OTHER TESTS: THE 5 SHORT CYCLE TESTS										

EMISSION RESULTS IN GRAMS PER MILE
FUEL ECONOMY IN MILES PER GALLON

APPENDIX E

LISTING OF FEDERAL TEST PROCEDURE RESULTS ON INDIVIDUAL VEHICLES

ST. LOUIS

VEHICLE NUMBER	YEAR	MAKE	MODEL	CID	TEST TYPE	HC	CO	CO2	NOXC	FUEL ECONOMY
8517	1966	VOLK	SEDA	97	COLD TRANS	5.15	65.29	263.2	3.35	23.22
					COLD STAB	4.84	66.70	272.0	1.71	22.63
IDLE HC,PPM/HEXANE				225.	HOT TRANS	5.54	62.28	233.8	2.63	25.41
IDLE CO,PCT (MEAS)				1.00						
IDLE CO,PCT (SPEC)				99.99	1975 FTP	5.10	65.20	259.8	2.30	23.46

OTHER TESTS: THE 5 SHORT CYCLE TESTS

EMISSION RESULTS IN GRAMS PER MILE
FUEL ECONOMY IN MILES PER GALLON

APPENDIX E

LISTING OF FEDERAL TEST PROCEDURE RESULTS ON INDIVIDUAL VEHICLES

WASHINGTON D.C.

VEHICLE NUMBER	YEAR	MAKE	MODEL	CID	TEST TYPE	HC	CO	CO2	NOXC	FUEL ECONOMY
7001	1976	CHEV	G10	350	COLD TRANS	1.22	14.46	733.2	2.65	11.68
					COLD STAB	.28	7.19	712.1	1.11	12.25
IDLE HC,PPM/HEXANE				37.	HOT TRANS	.39	5.15	647.1	2.03	13.52
IDLE CO,PCT (MEAS)				.01						
IDLE CO,PCT (SPEC)				99.99	1975 FTP	.50	8.13	698.7	1.68	12.45
OTHER TESTS: HFET, MODAL										
7002	1976	CHEV	G10	350	COLD TRANS	1.09	11.28	718.1	2.15	12.01
					COLD STAB	.23	5.56	709.3	1.19	12.35
IDLE HC,PPM/HEXANE				22.	HOT TRANS	.40	4.07	610.8	2.40	14.35
IDLE CO,PCT (MEAS)				.01						
IDLE CO,PCT (SPEC)				99.99	1975 FTP	.46	6.33	684.3	1.72	12.76
OTHER TESTS: HFET, MODAL										
7003	1976	CHEV	G10	350	COLD TRANS	1.23	16.30	665.5	3.64	12.77
					COLD STAB	.25	5.57	660.8	1.29	13.24
IDLE HC,PPM/HEXANE				20.	HOT TRANS	.62	4.33	580.0	2.60	15.07
IDLE CO,PCT (MEAS)				.01						
IDLE CO,PCT (SPEC)				99.99	1975 FTP	.56	7.44	639.7	2.13	13.59
OTHER TESTS: HFET, MODAL										
7004	1976	CHEV	G10	350	COLD TRANS	3.51	98.62	558.0	2.03	12.26
					COLD STAB	1.87	44.83	577.1	.87	13.58
IDLE HC,PPM/HEXANE				110.	HOT TRANS	1.30	18.02	552.7	2.09	15.17
IDLE CO,PCT (MEAS)				1.10						
IDLE CO,PCT (SPEC)				99.99	1975 FTP	2.05	48.59	566.5	1.44	13.67
OTHER TESTS: HFET, MODAL										
7005	1976	DODG	B100	318	COLD TRANS	1.28	19.22	708.1	2.35	11.96
					COLD STAB	.13	.68	684.4	2.46	12.94
IDLE HC,PPM/HEXANE				17.	HOT TRANS	.41	2.36	609.7	2.32	14.44
IDLE CO,PCT (MEAS)				.01						
IDLE CO,PCT (SPEC)				.30	1975 FTP	.44	4.95	668.9	2.40	13.09
OTHER TESTS: HFET, MODAL										

EMISSION RESULTS IN GRAMS PER MILE
FUEL ECONOMY IN MILES PER GALLON

APPENDIX E

LISTING OF FEDERAL TEST PROCEDURE RESULTS ON INDIVIDUAL VEHICLES

WASHINGTON D.C.

VEHICLE NUMBER	YEAR	MAKE	MODEL	CID	TEST TYPE	HC	CO	CO2	NOXC	FUEL ECONOMY
7006	1976	DODG	B100	225	COLD TRANS	1.57	37.91	559.0	3.56	14.23
					COLD STAB	.17	2.28	514.9	3.30	17.10
IDLE HC,PPM/HEXANE				15.	HOT TRANS	.72	10.99	486.9	2.09	17.53
IDLE CO,PCT (MEAS)				.01						
IDLE CO,PCT (SPEC)				.30	1975 FTP	.61	11.99	516.3	3.02	16.53
OTHER TESTS: HFET, MODAL										
7007	1976	FORD	E100	300	COLD TRANS	.45	1.33	682.0	3.06	12.95
					COLD STAB	.19	.06	641.0	2.65	13.83
IDLE HC,PPM/HEXANE				25.	HOT TRANS	.49	.44	591.3	2.76	14.95
IDLE CO,PCT (MEAS)				.01						
IDLE CO,PCT (SPEC)				99.99	1975 FTP	.33	.42	635.9	2.76	13.92
OTHER TESTS: HFET, MODAL										
7008	1976	FORD	E100	351	COLD TRANS	2.65	19.34	731.6	6.41	11.52
					COLD STAB	2.04	14.78	681.6	2.52	12.48
IDLE HC,PPM/HEXANE				220.	HOT TRANS	2.50	8.88	611.1	4.79	14.02
IDLE CO,PCT (MEAS)				2.60						
IDLE CO,PCT (SPEC)				99.99	1975 FTP	2.29	14.11	672.7	3.94	12.64
OTHER TESTS: HFET, MODAL										
7009	1976	FORD	F100	360	COLD TRANS	1.74	26.03	788.6	2.96	10.63
					COLD STAB	1.10	16.02	797.5	1.95	10.74
IDLE HC,PPM/HEXANE				39.	HOT TRANS	1.11	9.25	689.4	2.58	12.55
IDLE CO,PCT (MEAS)				.16						
IDLE CO,PCT (SPEC)				99.99	1975 FTP	1.24	16.23	766.1	2.33	11.16
OTHER TESTS: HFET, MODAL										
7010	1976	DATS	620	119	COLD TRANS	1.61	20.68	462.7	5.89	17.74
					COLD STAB	1.21	18.71	481.3	3.55	17.25
IDLE HC,PPM/HEXANE				75.	HOT TRANS	1.50	15.37	396.7	4.74	20.85
IDLE CO,PCT (MEAS)				1.80						
IDLE CO,PCT (SPEC)				2.00	1975 FTP	1.37	18.20	454.4	4.36	18.21
OTHER TESTS: HFET, MODAL										

EMISSION RESULTS IN GRAMS PER MILE
FUEL ECONOMY IN MILES PER GALLON

APPENDIX E

LISTING OF FEDERAL TEST PROCEDURE RESULTS ON INDIVIDUAL VEHICLES

WASHINGTON D.C.

VEHICLE NUMBER	YEAR	MAKE	MODEL	CID	TEST TYPE	HC	CO	CO2	NOXC	FUEL ECONOMY
7011	1975	CHEV	C10	350	COLD TRANS	1.35	10.74	649.2	3.40	13.24
					COLD STAB	.39	1.31	791.3	2.01	11.17
IDLE HC,PPM/HEXANE				25.	HOT TRANS	.42	4.21	586.5	3.16	14.93
IDLE CO,PCT (MEAS)				0.00						
IDLE CO,PCT (SPEC)				99.99	1975 FTP	.59	4.04	706.2	2.61	12.42
OTHER TESTS: NONE										
7012	1975	CHEV	C10	350	COLD TRANS	1.36	26.34	667.5	4.23	12.44
					COLD STAB	.14	3.82	311.7	1.08	27.90
IDLE HC,PPM/HEXANE				38.	HOT TRANS	.35	4.23	595.2	3.97	14.72
IDLE CO,PCT (MEAS)				.01						
IDLE CO,PCT (SPEC)				99.99	1975 FTP	.45	8.57	462.3	2.52	18.60
OTHER TESTS: NONE										
7013	1975	CHEV	G10V	350	COLD TRANS	1.80	29.86	759.3	3.44	10.93
					COLD STAB	.26	.09	762.7	1.90	11.62
IDLE HC,PPM/HEXANE				23.	HOT TRANS	.27	.80	673.4	3.00	13.14
IDLE CO,PCT (MEAS)				.01						
IDLE CO,PCT (SPEC)				99.99	1975 FTP	.58	6.41	737.6	2.52	11.84
OTHER TESTS: NONE										
7014	1975	DODG	B100	318	COLD TRANS	2.41	60.72	730.0	1.46	10.65
					COLD STAB	.83	19.78	698.5	1.72	12.12
IDLE HC,PPM/HEXANE				110.	HOT TRANS	.83	7.68	641.1	2.14	13.53
IDLE CO,PCT (MEAS)				.90						
IDLE CO,PCT (SPEC)				.30	1975 FTP	1.16	24.91	689.3	1.78	12.12
OTHER TESTS: NONE										
7015	1975	FORD	F100	302	COLD TRANS	3.12	43.31	753.4	2.20	10.68
					COLD STAB	1.99	34.46	805.3	1.02	10.25
IDLE HC,PPM/HEXANE				110.	HOT TRANS	1.71	25.78	658.6	2.11	12.60
IDLE CO,PCT (MEAS)				3.00						
IDLE CO,PCT (SPEC)				99.99	1975 FTP	2.15	33.91	754.6	1.56	10.89
OTHER TESTS: NONE										

EMISSION RESULTS IN GRAMS PER MILE
FUEL ECONOMY IN MILES PER GALLON

APPENDIX E

LISTING OF FEDERAL TEST PROCEDURE RESULTS ON INDIVIDUAL VEHICLES

WASHINGTON D.C.

VEHICLE NUMBER	YEAR	MAKE	MODEL	CID	TEST TYPE	HC	CO	CO2	NOXC	FUEL ECONOMY
7016	1975	FORD	F100	300	COLD TRANS	.61	8.07	614.6	3.35	14.11
					COLD STAB	.33	3.36	601.1	1.88	14.61
IDLE HC,PPM/HEXANE				12.	HOT TRANS	.54	4.35	538.4	2.56	16.23
IDLE CO,PCT (MEAS)				0.00						
IDLE CO,PCT (SPEC)				99.99	1975 FTP	.44	4.60	586.8	2.37	14.91
OTHER TESTS: NONE										
7017	1975	FORD	F100	360	COLD TRANS	2.60	29.29	736.8	2.76	11.22
					COLD STAB	2.04	13.33	717.9	1.68	11.91
IDLE HC,PPM/HEXANE				240.	HOT TRANS	2.29	9.37	633.8	2.25	13.53
IDLE CO,PCT (MEAS)				.08						
IDLE CO,PCT (SPEC)				99.99	1975 FTP	2.23	15.54	698.8	2.06	12.15
OTHER TESTS: NONE										
6018	1976	AMC	PACE	258	COLD TRANS	1.17	23.20	550.1	3.97	15.04
					COLD STAB	.89	2.15	515.0	3.28	17.03
IDLE HC,PPM/HEXANE				90.	HOT TRANS	1.28	3.53	489.5	2.57	17.78
IDLE CO,PCT (MEAS)				.03						
IDLE CO,PCT (SPEC)				1.00	1975 FTP	1.05	6.86	515.3	3.23	16.77
OTHER TESTS: HFET, MODAL										
6019	1976	BUIC	REGA	350	COLD TRANS	1.14	17.16	675.0	3.22	12.58
					COLD STAB	.14	1.35	633.2	1.74	13.96
IDLE HC,PPM/HEXANE				20.	HOT TRANS	.37	2.02	566.5	2.58	15.55
IDLE CO,PCT (MEAS)				.01						
IDLE CO,PCT (SPEC)				99.99	1975 FTP	.41	4.79	623.6	2.27	14.03
OTHER TESTS: HFET, MODAL										
6020	1976	BUIC	ELEC	455	COLD TRANS	1.87	21.33	774.9	4.24	10.90
					COLD STAB	1.69	32.67	759.6	1.23	10.87
IDLE HC,PPM/HEXANE				145.	HOT TRANS	1.54	14.79	666.6	2.95	12.78
IDLE CO,PCT (MEAS)				1.20						
IDLE CO,PCT (SPEC)				99.99	1975 FTP	1.68	25.46	737.4	2.32	11.34
OTHER TESTS: HFET, MODAL										

EMISSION RESULTS IN GRAMS PER MILE
FUEL ECONOMY IN MILES PER GALLON

APPENDIX E

LISTING OF FEDERAL TEST PROCEDURE RESULTS ON INDIVIDUAL VEHICLES

WASHINGTON D.C.

VEHICLE NUMBER	YEAR	MAKE	MODEL	CID	TEST TYPE	HC	CO	CO2	NOXC	FUEL ECONOMY
6021	1976	CADI	DEVI	500	COLD TRANS	1.79	28.31	847.4	1.66	9.89
					COLD STAB	.48	9.96	810.0	1.61	10.73
IDLE HC,PPM/HEXANE				15.	HOT TRANS	.40	4.56	731.9	1.82	11.99
IDLE CO,PCT (MEAS)				.01						
IDLE CO,PCT (SPEC)				99.99	1975 FTP	.73	12.26	796.4	1.68	10.85
OTHER TESTS: HFET, MODAL										
6022	1976	CHEV	MONT	350	COLD TRANS	1.54	27.92	704.5	3.09	11.78
					COLD STAB	.14	2.43	721.2	1.43	12.23
IDLE HC,PPM/HEXANE				32.	HOT TRANS	.27	3.42	623.8	2.64	14.09
IDLE CO,PCT (MEAS)				.01						
IDLE CO,PCT (SPEC)				99.99	1975 FTP	.47	7.94	691.2	2.10	12.59
OTHER TESTS: HFET, MODAL										
6023	1976	CHEV	MALI	305	COLD TRANS	2.27	28.16	550.0	4.30	14.76
					COLD STAB	.19	1.35	561.0	2.75	15.74
IDLE HC,PPM/HEXANE				25.	HOT TRANS	.63	1.75	509.8	4.28	17.25
IDLE CO,PCT (MEAS)				.01						
IDLE CO,PCT (SPEC)				99.99	1975 FTP	.74	6.98	544.8	3.48	15.90
OTHER TESTS: HFET, MODAL										
6024	1976	CHEV	MONZ	140	COLD TRANS	3.46	48.35	421.6	2.43	17.45
					COLD STAB	1.08	28.86	435.4	1.04	18.33
IDLE HC,PPM/HEXANE				200.	HOT TRANS	1.06	21.14	385.1	2.36	21.05
IDLE CO,PCT (MEAS)				5.00						
IDLE CO,PCT (SPEC)				99.99	1975 FTP	1.57	30.76	418.8	1.69	18.80
OTHER TESTS: HFET, MODAL										
6025	1976	CHEV	MALI	305	COLD TRANS	1.34	18.58	593.6	3.51	14.15
					COLD STAB	.18	1.79	584.5	1.95	15.10
IDLE HC,PPM/HEXANE				41.	HOT TRANS	.40	5.66	513.3	2.65	16.96
IDLE CO,PCT (MEAS)				0.00						
IDLE CO,PCT (SPEC)				99.99	1975 FTP	.48	6.30	566.9	2.46	15.35
OTHER TESTS: HFET, MODAL										

EMISSION RESULTS IN GRAMS PER MILE
FUEL ECONOMY IN MILES PER GALLON

APPENDIX E

LISTING OF FEDERAL TEST PROCEDURE RESULTS ON INDIVIDUAL VEHICLES

WASHINGTON D.C.

VEHICLE NUMBER	YEAR	MAKE	MODEL	CID	TEST TYPE	HC	CO	CO2	NOXC	FUEL ECONOMY
6026	1976	CHEV	MONT	350	COLD TRANS	1.75	39.63	644.4	3.18	12.46
					COLD STAB	.16	1.48	662.4	1.45	13.34
IDLE HC,PPM/HEXANE				35.	HOT TRANS	.45	3.66	585.7	2.72	14.97
IDLE CO,PCT (MEAS)				.01						
IDLE CO,PCT (SPEC)				99.99	1975 FTP	.57	9.93	637.8	2.15	13.55
OTHER TESTS: HFET, MODAL										
6027	1976	CHEV	CAMA	250	COLD TRANS	3.04	42.97	467.4	3.62	16.30
					COLD STAB	2.12	24.31	538.8	3.61	15.20
IDLE HC,PPM/HEXANE				160.	HOT TRANS	1.61	17.18	427.2	3.85	19.32
IDLE CO,PCT (MEAS)				.33						
IDLE CO,PCT (SPEC)				99.99	1975 FTP	2.17	26.20	493.7	3.68	16.38
OTHER TESTS: HFET, MODAL										
6028	1976	CHEV	CHET	85	COLD TRANS	1.40	22.94	373.9	3.09	21.42
					COLD STAB	.38	6.31	355.3	3.44	24.22
IDLE HC,PPM/HEXANE				150.	HOT TRANS	.40	5.92	346.8	2.83	24.83
IDLE CO,PCT (MEAS)				.40						
IDLE CO,PCT (SPEC)				99.99	1975 FTP	.60	9.62	356.8	3.20	23.74
OTHER TESTS: HFET, MODAL										
6029	1976	DODG	ASPE	318	COLD TRANS	2.27	32.78	600.2	2.78	13.47
					COLD STAB	1.09	9.96	582.0	1.45	14.77
IDLE HC,PPM/HEXANE				22.	HOT TRANS	1.17	4.74	533.7	2.32	16.29
IDLE CO,PCT (MEAS)				.01						
IDLE CO,PCT (SPEC)				.30	1975 FTP	1.35	13.23	572.6	1.96	14.85
OTHER TESTS: HFET, MODAL										
6030	1976	DODG	ASPE	225	COLD TRANS	1.86	26.38	620.6	6.51	13.29
					COLD STAB	.48	3.02	609.6	2.52	14.41
IDLE HC,PPM/HEXANE				40.	HOT TRANS	1.38	8.32	562.0	4.52	15.32
IDLE CO,PCT (MEAS)				.05						
IDLE CO,PCT (SPEC)				.30	1975 FTP	1.01	9.27	598.9	3.88	14.39
OTHER TESTS: HFET, MODAL										

EMISSION RESULTS IN GRAMS PER MILE
FUEL ECONOMY IN MILES PER GALLON

APPENDIX E

LISTING OF FEDERAL TEST PROCEDURE RESULTS ON INDIVIDUAL VEHICLES

WASHINGTON D.C.

VEHICLE NUMBER	YEAR	MAKE	MODEL	CID	TEST TYPE	HC	CO	CO2	NOXC	FUEL ECONOMY
6031	1976	FORD	PINT	140	COLD TRANS	1.32	7.01	427.2	3.66	20.06
					COLD STAB	.25	1.98	270.5	1.47	32.34
IDLE HC,PPM/HEXANE				17.	HOT TRANS	.44	1.80	368.3	3.13	23.83
IDLE CO,PCT (MEAS)				0.00						
IDLE CO,PCT (SPEC)				99.99	1975 FTP	.52	2.96	329.5	2.37	26.43
OTHER TESTS: HFET, MODAL										
6032	1976	FORD	LTD	400	COLD TRANS	.87	12.77	858.3	2.07	10.07
					COLD STAB	.37	1.13	792.3	2.87	11.16
IDLE HC,PPM/HEXANE				105.	HOT TRANS	.59	8.76	740.4	2.62	11.74
IDLE CO,PCT (MEAS)				.01						
IDLE CO,PCT (SPEC)				99.99	1975 FTP	.53	5.61	791.7	2.64	11.06
OTHER TESTS: HFET, MODAL										
6033	1976	FORD	TORI	351	COLD TRANS	2.93	54.50	719.8	1.87	10.89
					COLD STAB	3.36	82.65	606.1	1.95	11.89
IDLE HC,PPM/HEXANE				220.	HOT TRANS	2.11	38.58	584.9	2.39	13.61
IDLE CO,PCT (MEAS)				7.00						
IDLE CO,PCT (SPEC)				99.99	1975 FTP	2.93	64.83	623.7	2.05	12.08
OTHER TESTS: HFET, MODAL										
6034	1976	FORD	GRAN	250	COLD TRANS	1.01	24.25	676.2	1.45	12.37
					COLD STAB	.34	.14	585.9	1.90	15.11
IDLE HC,PPM/HEXANE				81.	HOT TRANS	.94	14.80	568.5	1.47	14.92
IDLE CO,PCT (MEAS)				.01						
IDLE CO,PCT (SPEC)				99.99	1975 FTP	.64	9.10	599.7	1.69	14.41
OTHER TESTS: HFET, MODAL										
6035	1976	FORD	GRAN	302	COLD TRANS	1.21	8.33	687.9	1.63	12.59
					COLD STAB	.51	.32	675.5	2.26	13.10
IDLE HC,PPM/HEXANE				45.	HOT TRANS	1.23	4.82	612.5	1.88	14.22
IDLE CO,PCT (MEAS)				.01						
IDLE CO,PCT (SPEC)				99.99	1975 FTP	.85	3.19	660.9	2.03	13.27
OTHER TESTS: HFET, MODAL										

EMISSION RESULTS IN GRAMS PER MILE
FUEL ECONOMY IN MILES PER GALLON

APPENDIX E

LISTING OF FEDERAL TEST PROCEDURE RESULTS ON INDIVIDUAL VEHICLES

WASHINGTON D.C.

VEHICLE NUMBER	YEAR	MAKE	MODEL	CID	TEST TYPE	HC	CO	CO2	NOXC	FUEL ECONOMY
6036	1976	FORD	GRAN	302	COLD TRANS	1.34	9.59	651.7	2.46	13.23
					COLD STAB	.63	.18	632.0	2.31	13.99
IDLE HC,PPM/HEXANE				140.	HOT TRANS	.82	2.06	580.2	2.15	15.15
IDLE CO,PCT (MEAS)				.12						
IDLE CO,PCT (SPEC)				99.99	1975 FTP	.83	2.63	621.9	2.30	14.12
OTHER TESTS: HFET, MODAL										
6037	1976	MERC	MARQ	400	COLD TRANS	.81	12.22	825.8	2.68	10.47
					COLD STAB	.32	.72	788.3	3.92	11.23
IDLE HC,PPM/HEXANE				75.	HOT TRANS	.47	5.03	678.3	3.73	12.91
IDLE CO,PCT (MEAS)				.01						
IDLE CO,PCT (SPEC)				99.99	1975 FTP	.46	4.27	766.0	3.61	11.46
OTHER TESTS: HFET, MODAL										
6038	1976	MERC	COME	250	COLD TRANS	.83	4.46	596.2	2.05	14.65
					COLD STAB	.28	.01	502.5	2.85	17.63
IDLE HC,PPM/HEXANE				23.	HOT TRANS	.49	.43	484.2	1.99	18.25
IDLE CO,PCT (MEAS)				.01						
IDLE CO,PCT (SPEC)				99.99	1975 FTP	.45	1.04	516.8	2.45	17.07
OTHER TESTS: HFET, MODAL										
6039	1976	OLDS	CUTL	260	COLD TRANS	1.84	22.12	579.8	3.56	14.31
					COLD STAB	.21	.73	580.8	2.78	15.23
IDLE HC,PPM/HEXANE				30.	HOT TRANS	.59	4.57	520.5	3.36	16.76
IDLE CO,PCT (MEAS)				.01						
IDLE CO,PCT (SPEC)				99.99	1975 FTP	.65	6.18	564.1	3.10	15.41
OTHER TESTS: HFET, MODAL										
6040	1976	OLDS	CUTL	350	COLD TRANS	2.13	9.86	698.4	2.48	12.32
					COLD STAB	.21	0.00	631.2	1.54	14.05
IDLE HC,PPM/HEXANE				70.	HOT TRANS	.46	1.54	575.9	2.23	15.31
IDLE CO,PCT (MEAS)				.01						
IDLE CO,PCT (SPEC)				99.99	1975 FTP	.67	2.45	629.9	1.92	13.96
OTHER TESTS: HFET, MODAL										

EMISSION RESULTS IN GRAMS PER MILE
FUEL ECONOMY IN MILES PER GALLON

APPENDIX E

LISTING OF FEDERAL TEST PROCEDURE RESULTS ON INDIVIDUAL VEHICLES

WASHINGTON D.C.

VEHICLE NUMBER	YEAR	MAKE	MODEL	CID	TEST TYPE	HC	CO	CO2	NOXC	FUEL ECONOMY
6041	1976	OLDS	DELT	455	COLD TRANS	1.98	7.50	762.1	2.09	11.38
					COLD STAB	.16	.15	689.6	1.72	12.86
IDLE HC,PPM/HEXANE				22.	HOT TRANS	.27	2.16	656.0	2.10	13.44
IDLE CO,PCT (MEAS)				.01						
IDLE CO,PCT (SPEC)				99.99	1975 FTP	.57	2.21	695.3	1.90	12.67
OTHER TESTS: HFET, MODAL										
6042	1976	PLYM	VOLA	225	COLD TRANS	2.45	36.88	428.3	6.55	17.97
					COLD STAB	2.65	44.47	383.2	4.47	19.23
IDLE HC,PPM/HEXANE				330.	HOT TRANS	1.87	20.36	377.1	6.05	21.38
IDLE CO,PCT (MEAS)				7.90						
IDLE CO,PCT (SPEC)				.30	1975 FTP	2.40	36.33	390.8	5.33	19.48
OTHER TESTS: HFET, MODAL										
6043	1976	PLYM	FURY	318	COLD TRANS	2.03	33.51	608.3	6.87	13.30
					COLD STAB	.71	3.87	608.9	5.78	14.38
IDLE HC,PPM/HEXANE				180.	HOT TRANS	1.11	2.45	537.9	7.35	16.28
IDLE CO,PCT (MEAS)				.21						
IDLE CO,PCT (SPEC)				.30	1975 FTP	1.09	9.58	589.4	6.43	14.60
OTHER TESTS: HFET, MODAL										
6044	1976	PONT	GRNP	350	COLD TRANS	1.44	19.81	708.4	3.10	11.93
					COLD STAB	.17	.63	685.4	2.58	12.92
IDLE HC,PPM/HEXANE				33.	HOT TRANS	.32	3.04	600.2	3.27	14.65
IDLE CO,PCT (MEAS)				0.00						
IDLE CO,PCT (SPEC)				99.99	1975 FTP	.47	5.24	666.9	2.87	13.12
OTHER TESTS: HFET, MODAL										
6045	1976	PONT	CATA	400	COLD TRANS	1.76	15.12	730.6	2.92	11.68
					COLD STAB	.16	.14	712.3	2.36	12.45
IDLE HC,PPM/HEXANE				22.	HOT TRANS	.69	4.44	624.6	2.93	14.00
IDLE CO,PCT (MEAS)				.01						
IDLE CO,PCT (SPEC)				99.99	1975 FTP	.63	4.40	692.1	2.63	12.66
OTHER TESTS: HFET, MODAL										

EMISSION RESULTS IN GRAMS PER MILE
FUEL ECONOMY IN MILES PER GALLON

APPENDIX E

LISTING OF FEDERAL TEST PROCEDURE RESULTS ON INDIVIDUAL VEHICLES

WASHINGTON D.C.

VEHICLE NUMBER	YEAR	MAKE	MODEL	CID	TEST TYPE	HC	CO	CO2	NOXC	FUEL ECONOMY
6046	1976	DATS	B210	85	COLD TRANS	1.92	24.13	356.2	4.69	22.18
					COLD STAB	1.30	7.21	376.3	2.24	22.65
IDLE HC,PPM/HEXANE				83.	HOT TRANS	1.34	6.81	316.1	3.95	26.81
IDLE CO,PCT (MEAS)				.14						
IDLE CO,PCT (SPEC)				2.00	1975 FTP	1.44	10.58	355.7	3.21	23.55
OTHER TESTS: HFET, MODAL										
6047	1976	DATS	710	119	COLD TRANS	1.07	25.88	490.2	3.40	16.61
					COLD STAB	.52	18.31	517.3	1.85	16.20
IDLE HC,PPM/HEXANE				48.	HOT TRANS	1.00	16.79	428.0	2.98	19.40
IDLE CO,PCT (MEAS)				1.40						
IDLE CO,PCT (SPEC)				2.00	1975 FTP	.76	19.45	487.4	2.48	17.06
OTHER TESTS: HFET, MODAL										
6048	1976	TOYO	CORO	97	COLD TRANS	2.10	20.25	430.3	5.16	18.93
					COLD STAB	.83	14.18	458.9	2.49	18.34
IDLE HC,PPM/HEXANE				55.	HOT TRANS	1.27	10.64	380.6	4.18	22.11
IDLE CO,PCT (MEAS)				1.05						
IDLE CO,PCT (SPEC)				99.99	1975 FTP	1.21	14.46	431.7	3.50	19.37
OTHER TESTS: HFET, MODAL										
6049	1976	TOYO	CORO	133	COLD TRANS	1.28	21.80	485.6	3.99	16.94
					COLD STAB	.37	12.89	531.3	1.67	16.06
IDLE HC,PPM/HEXANE				20.	HOT TRANS	.59	7.60	426.9	3.35	20.14
IDLE CO,PCT (MEAS)				.50						
IDLE CO,PCT (SPEC)				99.99	1975 FTP	.61	13.28	493.4	2.61	17.19
OTHER TESTS: HFET, MODAL										
6050	1976	VOLK	RABB	97	COLD TRANS	.72	7.91	424.7	2.17	20.20
					COLD STAB	.09	.09	429.4	1.56	20.65
IDLE HC,PPM/HEXANE				15.	HOT TRANS	.20	.40	348.7	2.11	25.36
IDLE CO,PCT (MEAS)				0.00						
IDLE CO,PCT (SPEC)				1.50	1975 FTP	.25	1.78	406.4	1.84	21.65
OTHER TESTS: HFET, MODAL										

EMISSION RESULTS IN GRAMS PER MILE
FUEL ECONOMY IN MILES PER GALLON

APPENDIX E

LISTING OF FEDERAL TEST PROCEDURE RESULTS ON INDIVIDUAL VEHICLES

WASHINGTON D.C.

VEHICLE NUMBER	YEAR	MAKE	MODEL	CID	TEST TYPE	HC	CO	CO2	NOXC	FUEL ECONOMY
6051	1976	VOLK	RABB	97	COLD TRANS	3.28	38.39	416.5	1.94	18.22
					COLD STAB	.34	.32	466.7	1.82	18.95
IDLE HC,PPM/HEXANE				28.	HOT TRANS	.54	.29	371.8	2.06	23.73
IDLE CO,PCT (MEAS)				.01						
IDLE CO,PCT (SPEC)				1.50	1975 FTP	1.00	8.15	430.5	1.91	19.88
OTHER TESTS: HFET, MODAL										
5052	1975	AMC	PACE	258	COLD TRANS	1.92	39.37	532.5	4.28	14.78
					COLD STAB	2.20	58.42	490.7	3.80	15.06
IDLE HC,PPM/HEXANE				150.	HOT TRANS	2.04	28.89	466.5	4.13	17.12
IDLE CO,PCT (MEAS)				4.20						
IDLE CO,PCT (SPEC)				1.00	1975 FTP	2.10	46.44	492.7	3.99	15.51
OTHER TESTS: NONE										
5053	1975	BUIC	LESA	350	COLD TRANS	1.79	27.26	722.4	3.24	11.51
					COLD STAB	1.27	22.87	667.8	1.47	12.54
IDLE HC,PPM/HEXANE				140.	HOT TRANS	1.10	12.49	619.5	2.53	13.81
IDLE CO,PCT (MEAS)				.90						
IDLE CO,PCT (SPEC)				99.99	1975 FTP	1.33	20.94	665.8	2.12	12.63
OTHER TESTS: NONE										
5054	1975	BUIC	ELEC	455	COLD TRANS	1.85	10.72	797.0	4.02	10.83
					COLD STAB	.28	4.72	787.7	1.64	11.15
IDLE HC,PPM/HEXANE				45.	HOT TRANS	.45	1.83	697.5	3.37	12.65
IDLE CO,PCT (MEAS)				.01						
IDLE CO,PCT (SPEC)				99.99	1975 FTP	.65	5.17	765.0	2.60	11.45
OTHER TESTS: NONE										
5055	1975	CADI	DEVI	500	COLD TRANS	4.89	125.15	713.4	1.49	9.59
					COLD STAB	4.09	96.00	664.0	1.22	10.72
IDLE HC,PPM/HEXANE				15.	HOT TRANS	3.28	79.07	615.7	1.35	11.83
IDLE CO,PCT (MEAS)				.01						
IDLE CO,PCT (SPEC)				99.99	1975 FTP	4.04	97.38	661.0	1.31	10.73
OTHER TESTS: NONE										

EMISSION RESULTS IN GRAMS PER MILE
FUEL ECONOMY IN MILES PER GALLON

APPENDIX E

LISTING OF FEDERAL TEST PROCEDURE RESULTS ON INDIVIDUAL VEHICLES

WASHINGTON D.C.

VEHICLE NUMBER	YEAR	MAKE	MODEL	CID	TEST TYPE	HC	CO	CO2	NOXC	FUEL ECONOMY
5056	1975	CHEV	VEGA	140	COLD TRANS	.77	13.17	389.6	1.16	21.50
					COLD STAB	.61	21.41	459.8	.75	17.92
IDLE HC,PPM/HEXANE				195.	HOT TRANS	.37	9.29	412.5	1.05	20.72
IDLE CO,PCT (MEAS)				3.00						
IDLE CO,PCT (SPEC)				99.99	1975 FTP	.58	16.41	432.5	.92	19.29
OTHER TESTS: NONE										
5057	1975	CHEV	MONT	350	COLD TRANS	1.88	36.06	616.8	3.27	13.06
					COLD STAB	.70	22.87	613.0	1.27	13.63
IDLE HC,PPM/HEXANE				20.	HOT TRANS	.43	7.45	560.2	2.87	15.48
IDLE CO,PCT (MEAS)				0.00						
IDLE CO,PCT (SPEC)				99.99	1975 FTP	.87	21.37	599.4	2.12	13.96
OTHER TESTS: NONE										
5058	1975	CHEV	IMPA	350	COLD TRANS	1.74	39.88	663.4	3.56	12.13
					COLD STAB	.19	3.56	681.0	1.61	12.92
IDLE HC,PPM/HEXANE				23.	HOT TRANS	.38	3.51	606.8	3.47	14.47
IDLE CO,PCT (MEAS)				.01						
IDLE CO,PCT (SPEC)				99.99	1975 FTP	.56	11.02	657.1	2.52	13.13
OTHER TESTS: NONE										
5059	1975	CHEV	CAPR	400	COLD TRANS	1.61	24.84	762.2	6.20	11.01
					COLD STAB	.26	.15	742.7	4.69	11.93
IDLE HC,PPM/HEXANE				40.	HOT TRANS	.62	2.14	696.0	7.10	12.65
IDLE CO,PCT (MEAS)				.01						
IDLE CO,PCT (SPEC)				99.99	1975 FTP	.64	5.77	734.0	5.66	11.91
OTHER TESTS: NONE										
5060	1975	CHEV	CAMA	250	COLD TRANS	1.69	32.77	538.5	2.18	14.91
					COLD STAB	.21	.10	511.5	1.24	17.32
IDLE HC,PPM/HEXANE				33.	HOT TRANS	.58	2.87	480.2	1.74	18.24
IDLE CO,PCT (MEAS)				.01						
IDLE CO,PCT (SPEC)				99.99	1975 FTP	.61	7.58	508.5	1.57	16.99
OTHER TESTS: NONE										

EMISSION RESULTS IN GRAMS PER MILE
FUEL ECONOMY IN MILES PER GALLON

APPENDIX E

LISTING OF FEDERAL TEST PROCEDURE RESULTS ON INDIVIDUAL VEHICLES

WASHINGTON D.C.

VEHICLE NUMBER	YEAR	MAKE	MODEL	CID	TEST TYPE	HC	CO	CO2	NOXC	FUEL ECONOMY
5061	1975	CHRY	NEWY	440	COLD TRANS	1.10	34.07	880.8	2.96	9.46
					COLD STAB	.09	.97	927.0	2.28	9.56
IDLE HC,PPM/HEXANE				50.	HOT TRANS	.40	4.17	805.2	3.37	10.92
IDLE CO,PCT (MEAS)				.02						
IDLE CO,PCT (SPEC)				.30	1975 FTP	.38	8.66	884.3	2.72	9.87
OTHER TESTS: NONE										
5062	1975	DODG	DART	225	COLD TRANS	1.79	41.56	522.1	2.08	14.97
					COLD STAB	1.24	37.41	517.1	1.30	15.31
IDLE HC,PPM/HEXANE				136.	HOT TRANS	1.61	17.38	458.0	2.13	18.10
IDLE CO,PCT (MEAS)				1.95						
IDLE CO,PCT (SPEC)				.30	1975 FTP	1.45	32.80	502.0	1.69	15.90
OTHER TESTS: NONE										
5063	1975	FORD	MUST	140	COLD TRANS	1.76	36.92	506.6	2.88	15.57
					COLD STAB	.82	20.30	542.1	1.98	15.39
IDLE HC,PPM/HEXANE				98.	HOT TRANS	.89	13.28	435.1	2.78	19.35
IDLE CO,PCT (MEAS)				1.90						
IDLE CO,PCT (SPEC)				99.99	1975 FTP	1.03	21.81	505.6	2.38	16.34
OTHER TESTS: NONE										
5064	1975	FORD	LTD	351	COLD TRANS	1.18	11.26	802.0	4.23	10.78
					COLD STAB	.88	10.86	788.7	1.83	10.98
IDLE HC,PPM/HEXANE				750.	HOT TRANS	1.43	7.74	682.5	3.97	12.69
IDLE CO,PCT (MEAS)				.30						
IDLE CO,PCT (SPEC)				99.99	1975 FTP	1.09	10.09	762.4	2.91	11.35
OTHER TESTS: NONE										
5065	1975	FORD	TORI	400	COLD TRANS	1.54	27.92	854.8	3.11	9.82
					COLD STAB	.90	15.23	866.9	2.14	9.93
IDLE HC,PPM/HEXANE				245.	HOT TRANS	1.01	10.52	748.0	3.22	11.56
IDLE CO,PCT (MEAS)				4.00						
IDLE CO,PCT (SPEC)				99.99	1975 FTP	1.06	16.56	832.0	2.64	10.30
OTHER TESTS: NONE										

EMISSION RESULTS IN GRAMS PER MILE
FUEL ECONOMY IN MILES PER GALLON

APPENDIX E

LISTING OF FEDERAL TEST PROCEDURE RESULTS ON INDIVIDUAL VEHICLES

WASHINGTON D.C.

VEHICLE NUMBER	YEAR	MAKE	MODEL	CID	TEST TYPE	HC	CO	CO2	NOXC	FUEL ECONOMY
5066	1975	FORD	MAVE	250	COLD TRANS	1.09	9.41	650.9	2.75	13.26
					COLD STAB	.19	.14	590.4	2.71	15.01
IDLE HC,PPM/HEXANE				38.	HOT TRANS	.37	.72	527.4	2.55	16.76
IDLE CO,PCT (MEAS)				.01						
IDLE CO,PCT (SPEC)				99.99	1975 FTP	.43	2.20	585.7	2.67	15.03
OTHER TESTS: NONE										
5067	1975	FORD	GRAN	302	COLD TRANS	1.55	17.42	663.4	2.75	12.76
					COLD STAB	.63	.59	686.0	2.15	12.88
IDLE HC,PPM/HEXANE				375.	HOT TRANS	.71	1.26	583.2	2.71	15.11
IDLE CO,PCT (MEAS)				6.50						
IDLE CO,PCT (SPEC)				99.99	1975 FTP	.84	4.23	653.3	2.43	13.39
OTHER TESTS: NONE										
5068	1975	MERC	MARQ	460	COLD TRANS	3.03	61.59	826.6	5.29	9.51
					COLD STAB	1.68	42.22	849.1	3.04	9.64
IDLE HC,PPM/HEXANE				25.	HOT TRANS	2.45	24.55	725.5	6.11	11.50
IDLE CO,PCT (MEAS)				.36						
IDLE CO,PCT (SPEC)				99.99	1975 FTP	2.17	41.39	810.8	4.34	10.06
OTHER TESTS: NONE										
5069	1975	OLDS	DELT	350	COLD TRANS	3.81	52.61	629.8	1.40	12.25
					COLD STAB	2.61	31.21	567.8	1.06	14.20
IDLE HC,PPM/HEXANE				500.	HOT TRANS	2.10	31.64	550.8	1.22	14.62
IDLE CO,PCT (MEAS)				1.80						
IDLE CO,PCT (SPEC)				99.99	1975 FTP	2.72	35.73	575.9	1.18	13.85
OTHER TESTS: NONE										
5070	1975	OLDS	CUST	455	COLD TRANS	2.84	26.55	780.9	2.99	10.67
					COLD STAB	1.87	24.66	706.2	2.16	11.82
IDLE HC,PPM/HEXANE				200.	HOT TRANS	1.12	8.39	652.7	2.92	13.26
IDLE CO,PCT (MEAS)				1.15						
IDLE CO,PCT (SPEC)				99.99	1975 FTP	1.86	20.61	707.0	2.54	11.91
OTHER TESTS: NONE										

EMISSION RESULTS IN GRAMS PER MILE
FUEL ECONOMY IN MILES PER GALLON

APPENDIX E

LISTING OF FEDERAL TEST PROCEDURE RESULTS ON INDIVIDUAL VEHICLES

WASHINGTON D.C.

VEHICLE NUMBER	YEAR	MAKE	MODEL	CID	TEST TYPE	HC	CO	CO2	NOXC	FUEL ECONOMY
5071	1975	PLYM	FURY	225	COLD TRANS	2.44	35.07	522.0	8.42	15.18
					COLD STAB	.45	1.67	533.9	6.95	16.50
IDLE HC,PPM/HEXANE				145.	HOT TRANS	.65	1.78	493.3	10.03	17.82
IDLE CO,PCT (MEAS)				.38						
IDLE CO,PCT (SPEC)				.30	1975 FTP	.92	8.58	520.4	8.09	16.54
OTHER TESTS: NONE										
5072	1975	PLYM	FURY	318	COLD TRANS	3.06	74.02	641.1	4.06	11.57
					COLD STAB	1.05	38.38	663.0	2.13	12.21
IDLE HC,PPM/HEXANE				150.	HOT TRANS	.74	15.67	590.0	4.14	14.38
IDLE CO,PCT (MEAS)				1.60						
IDLE CO,PCT (SPEC)				.30	1975 FTP	1.38	39.52	638.6	3.08	12.59
OTHER TESTS: NONE										
5073	1975	PONT	CATA	400	COLD TRANS	5.87	71.64	634.9	3.04	11.58
					COLD STAB	5.04	72.43	581.6	1.88	12.48
IDLE HC,PPM/HEXANE				560.	HOT TRANS	2.89	30.24	560.7	3.21	14.38
IDLE CO,PCT (MEAS)				6.50						
IDLE CO,PCT (SPEC)				99.99	1975 FTP	4.63	60.76	586.9	2.48	12.73
OTHER TESTS: NONE										
5074	1975	PONT	FIRE	350	COLD TRANS	3.76	32.80	706.9	1.96	11.52
					COLD STAB	.52	1.44	690.4	2.00	12.78
IDLE HC,PPM/HEXANE				31.	HOT TRANS	.85	8.33	608.0	2.02	14.23
IDLE CO,PCT (MEAS)				.01						
IDLE CO,PCT (SPEC)				99.99	1975 FTP	1.28	9.77	671.3	2.00	12.85
OTHER TESTS: NONE										
5075	1975	DATS	B210	85	COLD TRANS	1.46	12.11	326.2	3.98	25.37
					COLD STAB	1.73	5.79	327.7	1.78	25.93
IDLE HC,PPM/HEXANE				133.	HOT TRANS	1.42	5.36	293.7	3.64	28.95
IDLE CO,PCT (MEAS)				.09						
IDLE CO,PCT (SPEC)				2.00	1975 FTP	1.59	6.97	318.1	2.74	26.56
OTHER TESTS: NONE										

EMISSION RESULTS IN GRAMS PER MILE
FUEL ECONOMY IN MILES PER GALLON

APPENDIX E

LISTING OF FEDERAL TEST PROCEDURE RESULTS ON INDIVIDUAL VEHICLES

WASHINGTON D.C.

VEHICLE NUMBER	YEAR	MAKE	MODEL	CID	TEST TYPE	HC	CO	CO2	NOXC	FUEL ECONOMY
5076	1975	TOYO	CORO	133	COLD TRANS	1.89	16.07	483.8	3.07	17.23
					COLD STAB	1.21	9.83	526.1	1.69	16.27
IDLE HC,PPM/HEXANE				44.	HOT TRANS	1.11	6.51	441.5	2.36	19.50
IDLE CO,PCT (MEAS)				1.06						
IDLE CO,PCT (SPEC)				99.99	1975 FTP	1.33	10.21	494.3	2.16	17.25
OTHER TESTS: NONE										
5077	1975	TOYO	CORO	97	COLD TRANS	3.71	33.59	357.3	5.45	21.04
					COLD STAB	3.32	42.05	378.6	2.23	19.50
IDLE HC,PPM/HEXANE				390.	HOT TRANS	2.76	24.15	325.8	4.44	23.83
IDLE CO,PCT (MEAS)				5.40						
IDLE CO,PCT (SPEC)				99.99	1975 FTP	3.25	35.42	359.8	3.50	20.85
OTHER TESTS: NONE										
5078	1975	VOLK	RABB	90	COLD TRANS	2.56	44.82	479.1	1.41	15.91
					COLD STAB	.16	1.31	454.8	.88	19.40
IDLE HC,PPM/HEXANE				23.	HOT TRANS	.29	2.07	425.7	1.17	20.65
IDLE CO,PCT (MEAS)				0.00						
IDLE CO,PCT (SPEC)				2.00	1975 FTP	.69	10.47	451.9	1.07	18.86
OTHER TESTS: NONE										
5079	1975	VOLK	RABB	90	COLD TRANS	9.84	94.58	291.1	3.14	18.85
					COLD STAB	4.59	36.87	323.0	2.28	22.44
IDLE HC,PPM/HEXANE				160.	HOT TRANS	3.36	38.54	280.6	3.23	25.23
IDLE CO,PCT (MEAS)				.55						
IDLE CO,PCT (SPEC)				2.00	1975 FTP	5.34	49.20	304.9	2.72	22.24
OTHER TESTS: NONE										
4080	1974	AMC	MATA	304	COLD TRANS	4.47	45.12	618.2	5.02	12.62
					COLD STAB	3.61	31.03	601.7	4.24	13.41
IDLE HC,PPM/HEXANE				190.	HOT TRANS	3.55	20.29	565.2	4.80	14.59
IDLE CO,PCT (MEAS)				2.00						
IDLE CO,PCT (SPEC)				1.00	1975 FTP	3.77	31.00	595.1	4.55	13.53
OTHER TESTS: NONE										

EMISSION RESULTS IN GRAMS PER MILE
FUEL ECONOMY IN MILES PER GALLON

APPENDIX E

LISTING OF FEDERAL TEST PROCEDURE RESULTS ON INDIVIDUAL VEHICLES

WASHINGTON D.C.

VEHICLE NUMBER	YEAR	MAKE	MODEL	CID	TEST TYPE	HC	CO	CO2	NOXC	FUEL ECONOMY
4081	1974	BUIC	REGA	350	COLD TRANS	3.99	42.35	646.9	3.57	12.22
					COLD STAB	2.86	16.38	658.7	3.05	12.80
IDLE HC,PPM/HEXANE				140.	HOT TRANS	2.68	8.98	575.6	4.68	14.84
IDLE CO,PCT (MEAS)				.29						
IDLE CO,PCT (SPEC)				.30	1975 FTP	3.05	19.71	633.6	3.60	13.16
OTHER TESTS: NONE										
4082	1974	CADI	DEVI	472	COLD TRANS	3.81	115.92	807.3	1.57	8.86
					COLD STAB	2.41	42.80	827.3	1.69	9.84
IDLE HC,PPM/HEXANE				70.	HOT TRANS	2.05	29.73	726.2	2.28	11.39
IDLE CO,PCT (MEAS)				1.05						
IDLE CO,PCT (SPEC)				.40	1975 FTP	2.60	54.28	795.6	1.83	9.98
OTHER TESTS: NONE										
4083	1974	CHEV	VEGA	140	COLD TRANS	2.16	34.35	455.4	3.41	17.19
					COLD STAB	1.50	3.79	412.1	3.49	20.99
IDLE HC,PPM/HEXANE				140.	HOT TRANS	1.38	5.68	396.5	3.14	21.66
IDLE CO,PCT (MEAS)				.55						
IDLE CO,PCT (SPEC)				.50	1975 FTP	1.60	10.59	416.8	3.38	20.24
OTHER TESTS: NONE										
4084	1974	CHEV	MALI	350	COLD TRANS	3.86	47.64	714.8	1.90	11.07
					COLD STAB	2.54	31.59	789.8	1.16	10.47
IDLE HC,PPM/HEXANE				130.	HOT TRANS	2.55	28.73	667.6	1.78	12.31
IDLE CO,PCT (MEAS)				.50						
IDLE CO,PCT (SPEC)				.50	1975 FTP	2.82	34.11	741.0	1.48	11.05
OTHER TESTS: NONE										
4085	1974	CHEV	NOVA	250	COLD TRANS	3.83	60.48	494.8	2.13	14.74
					COLD STAB	2.90	66.50	495.1	1.09	14.58
IDLE HC,PPM/HEXANE				292.	HOT TRANS	2.97	37.31	462.2	2.27	16.74
IDLE CO,PCT (MEAS)				6.00						
IDLE CO,PCT (SPEC)				.30	1975 FTP	3.11	57.29	486.0	1.62	15.15
OTHER TESTS: NONE										

EMISSION RESULTS IN GRAMS PER MILE
FUEL ECONOMY IN MILES PER GALLON

APPENDIX E

LISTING OF FEDERAL TEST PROCEDURE RESULTS ON INDIVIDUAL VEHICLES

WASHINGTON D.C.

VEHICLE NUMBER	YEAR	MAKE	MODEL	CID	TEST TYPE	HC	CO	CO2	NOXC	FUEL ECONOMY
4086	1974	CHEV	CAMA	350	COLD TRANS	2.00	32.88	724.0	4.02	11.35
					COLD STAB	1.58	36.89	724.9	1.27	11.26
IDLE HC,PPM/HEXANE				100.	HOT TRANS	1.19	26.61	566.7	3.31	14.50
IDLE CO,PCT (MEAS)				1.50						
IDLE CO,PCT (SPEC)				.50	1975 FTP	1.56	33.26	681.6	2.39	12.01
OTHER TESTS: NONE										
4087	1974	CHEV	NOVA	350	COLD TRANS	8.04	102.03	783.5	1.68	9.16
					COLD STAB	2.02	27.68	972.8	1.24	8.68
IDLE HC,PPM/HEXANE				50.	HOT TRANS	2.68	24.82	689.9	1.63	12.04
IDLE CO,PCT (MEAS)				1.88						
IDLE CO,PCT (SPEC)				.50	1975 FTP	3.44	42.21	856.7	1.43	9.50
OTHER TESTS: NONE										
4088	1974	CHEV	MALI	400	COLD TRANS	4.57	38.21	803.1	3.33	10.11
					COLD STAB	3.51	31.94	784.7	1.51	10.49
IDLE HC,PPM/HEXANE				175.	HOT TRANS	2.90	25.22	663.0	2.78	12.47
IDLE CO,PCT (MEAS)				.08						
IDLE CO,PCT (SPEC)				.50	1975 FTP	3.56	31.40	755.3	2.23	10.88
OTHER TESTS: NONE										
4089	1974	CHRY	NEWP	400	COLD TRANS	4.70	76.11	722.5	3.37	10.36
					COLD STAB	2.69	54.96	792.1	1.76	10.01
IDLE HC,PPM/HEXANE				120.	HOT TRANS	2.89	28.95	649.3	3.92	12.61
IDLE CO,PCT (MEAS)				1.75						
IDLE CO,PCT (SPEC)				.50	1975 FTP	3.16	52.22	738.8	2.68	10.68
OTHER TESTS: NONE										
4090	1974	DODG	DART	225	COLD TRANS	3.57	44.11	466.2	8.69	16.23
					COLD STAB	2.72	43.78	449.6	4.92	16.84
IDLE HC,PPM/HEXANE				151.	HOT TRANS	2.58	25.54	418.3	8.06	19.02
IDLE CO,PCT (MEAS)				.95						
IDLE CO,PCT (SPEC)				.50	1975 FTP	2.86	38.87	444.5	6.55	17.25
OTHER TESTS: NONE										

EMISSION RESULTS IN GRAMS PER MILE
FUEL ECONOMY IN MILES PER GALLON

APPENDIX E

LISTING OF FEDERAL TEST PROCEDURE RESULTS ON INDIVIDUAL VEHICLES

WASHINGTON D.C.

VEHICLE NUMBER	YEAR	MAKE	MODEL	CID	TEST TYPE	HC	CO	CO2	NOXC	FUEL ECONOMY
4091	1974	FORD	PINT	122	COLD TRANS	6.35	65.54	357.0	2.81	18.49
					COLD STAB	5.35	72.58	379.7	1.94	17.38
IDLE HC,PPM/HEXANE				560.	HOT TRANS	3.77	40.30	343.1	3.51	21.21
IDLE CO,PCT (MEAS)				9.70						
IDLE CO,PCT (SPEC)				.50	1975 FTP	5.12	62.33	365.0	2.55	18.52
OTHER TESTS: NONE										
4092	1974	FORD	TORI	302	COLD TRANS	3.89	40.68	633.2	5.10	12.51
					COLD STAB	3.08	24.79	643.3	2.38	12.83
IDLE HC,PPM/HEXANE				250.	HOT TRANS	2.78	13.68	569.5	5.01	14.80
IDLE CO,PCT (MEAS)				1.00						
IDLE CO,PCT (SPEC)				.50	1975 FTP	3.16	25.03	621.1	3.66	13.24
OTHER TESTS: NONE										
4093	1974	FORD	MAVE	250	COLD TRANS	9.57	207.20	381.5	.92	12.04
					COLD STAB	3.79	88.49	409.1	.64	15.84
IDLE HC,PPM/HEXANE				280.	HOT TRANS	3.80	116.11	346.4	.86	16.41
IDLE CO,PCT (MEAS)				2.70						
IDLE CO,PCT (SPEC)				.25	1975 FTP	4.98	120.46	386.3	.76	15.01
OTHER TESTS: NONE										
4094	1974	FORD	STAW	400	COLD TRANS	6.30	130.66	637.0	4.32	10.29
					COLD STAB	5.98	94.83	618.4	2.76	11.29
IDLE HC,PPM/HEXANE				420.	HOT TRANS	4.42	45.45	565.1	5.43	13.64
IDLE CO,PCT (MEAS)				7.50						
IDLE CO,PCT (SPEC)				.40	1975 FTP	5.62	88.73	607.7	3.81	11.60
OTHER TESTS: NONE										
4095	1974	FORD	TORI	351	COLD TRANS	2.70	36.70	743.7	6.73	10.96
					COLD STAB	1.77	34.81	710.8	2.87	11.51
IDLE HC,PPM/HEXANE				170.	HOT TRANS	2.20	25.42	631.6	6.37	13.08
IDLE CO,PCT (MEAS)				1.85						
IDLE CO,PCT (SPEC)				.40	1975 FTP	2.08	32.64	696.0	4.62	11.77
OTHER TESTS: NONE										

EMISSION RESULTS IN GRAMS PER MILE
FUEL ECONOMY IN MILES PER GALLON

APPENDIX E

LISTING OF FEDERAL TEST PROCEDURE RESULTS ON INDIVIDUAL VEHICLES

WASHINGTON D.C.

VEHICLE NUMBER	YEAR	MAKE	MODEL	CID	TEST TYPE	HC	CO	CO2	NOXC	FUEL ECONOMY
4096	1974	MERC	COUG	351	COLD TRANS	2.46	60.56	782.3	2.26	10.03
					COLD STAB	1.46	22.32	827.3	1.42	10.24
IDLE HC,PPM/HEXANE				80.	HOT TRANS	1.55	26.11	687.3	2.39	12.10
IDLE CO,PCT (MEAS)				.07						
IDLE CO,PCT (SPEC)				.40	1975 FTP	1.69	31.23	779.8	1.86	10.64
OTHER TESTS: NONE										
4097	1974	OLDS	CUTL	350	COLD TRANS	4.01	28.04	724.7	4.90	11.36
					COLD STAB	2.87	4.73	780.9	3.42	11.13
IDLE HC,PPM/HEXANE				98.	HOT TRANS	3.07	5.13	660.9	5.00	13.08
IDLE CO,PCT (MEAS)				.10						
IDLE CO,PCT (SPEC)				.20	1975 FTP	3.16	9.63	736.6	4.16	11.65
OTHER TESTS: NONE										
4098	1974	OLDS	CUST	455	COLD TRANS	2.86	59.19	935.3	4.18	8.56
					COLD STAB	1.58	13.85	973.3	2.96	8.87
IDLE HC,PPM/HEXANE				175.	HOT TRANS	1.91	15.23	849.2	4.19	10.09
IDLE CO,PCT (MEAS)				.16						
IDLE CO,PCT (SPEC)				.20	1975 FTP	1.93	23.56	931.6	3.55	9.11
OTHER TESTS: NONE										
4099	1974	PLYM	VALI	318	COLD TRANS	3.24	27.42	667.8	6.19	12.31
					COLD STAB	3.32	52.33	583.6	2.09	13.12
IDLE HC,PPM/HEXANE				160.	HOT TRANS	2.67	23.95	541.5	4.37	15.11
IDLE CO,PCT (MEAS)				2.80						
IDLE CO,PCT (SPEC)				.50	1975 FTP	3.13	39.46	589.5	3.56	13.42
OTHER TESTS: NONE										
4100	1974	PLYM	VALI	225	COLD TRANS	3.10	35.33	533.2	9.40	14.83
					COLD STAB	2.37	23.49	505.1	5.84	16.15
IDLE HC,PPM/HEXANE				170.	HOT TRANS	2.66	19.41	466.0	8.03	17.57
IDLE CO,PCT (MEAS)				1.80						
IDLE CO,PCT (SPEC)				.50	1975 FTP	2.60	24.82	500.2	7.17	16.21
OTHER TESTS: NONE										

EMISSION RESULTS IN GRAMS PER MILE
FUEL ECONOMY IN MILES PER GALLON

APPENDIX E

LISTING OF FEDERAL TEST PROCEDURE RESULTS ON INDIVIDUAL VEHICLES

WASHINGTON D.C.

VEHICLE NUMBER	YEAR	MAKE	MODEL	CID	TEST TYPE	HC	CO	CO2	NOXC	FUEL ECONOMY
4101	1974	PONT	VENT	350	COLD TRANS	6.07	98.62	651.0	2.46	10.75
					COLD STAB	5.24	106.70	621.3	1.74	11.02
IDLE HC,PPM/HEXANE				330.	HOT TRANS	3.82	53.52	566.1	2.97	13.40
IDLE CO,PCT (MEAS)				7.10						
IDLE CO,PCT (SPEC)				.20	1975 FTP	5.02	90.53	612.4	2.22	11.52
OTHER TESTS: NONE										
4102	1974	DATS	710	108	COLD TRANS	3.45	38.04	377.6	2.18	19.80
					COLD STAB	3.18	19.15	381.9	1.60	21.03
IDLE HC,PPM/HEXANE				200.	HOT TRANS	2.85	18.18	332.7	2.10	23.97
IDLE CO,PCT (MEAS)				1.20						
IDLE CO,PCT (SPEC)				1.50	1975 FTP	3.15	22.77	367.6	1.86	21.47
OTHER TESTS: NONE										
4103	1974	TOYO	CORO	97	COLD TRANS	4.00	37.36	351.2	5.02	21.00
					COLD STAB	3.70	41.77	363.9	1.86	20.11
IDLE HC,PPM/HEXANE				235.	HOT TRANS	2.68	24.02	310.6	3.69	24.87
IDLE CO,PCT (MEAS)				2.80						
IDLE CO,PCT (SPEC)				4.00	1975 FTP	3.48	36.02	346.8	3.01	21.42
OTHER TESTS: NONE										
4104	1974	TOYO	CELI	120	COLD TRANS	2.94	26.73	405.2	6.19	19.44
					COLD STAB	2.33	22.59	343.2	3.73	22.99
IDLE HC,PPM/HEXANE				440.	HOT TRANS	1.93	9.67	355.8	5.70	23.54
IDLE CO,PCT (MEAS)				3.35						
IDLE CO,PCT (SPEC)				4.00	1975 FTP	2.35	19.92	359.4	4.77	22.29
OTHER TESTS: NONE										
4105	1974	VOLK	SEDA	97	COLD TRANS	4.38	45.86	311.8	3.30	22.31
					COLD STAB	4.71	55.76	320.1	1.86	21.00
IDLE HC,PPM/HEXANE				420.	HOT TRANS	3.81	33.93	294.0	3.20	24.70
IDLE CO,PCT (MEAS)				10.00						
IDLE CO,PCT (SPEC)				2.00	1975 FTP	4.40	47.76	311.3	2.52	22.17
OTHER TESTS: NONE										

EMISSION RESULTS IN GRAMS PER MILE
FUEL ECONOMY IN MILES PER GALLON

APPENDIX E

LISTING OF FEDERAL TEST PROCEDURE RESULTS ON INDIVIDUAL VEHICLES

WASHINGTON D.C.

VEHICLE NUMBER	YEAR	MAKE	MODEL	CID	TEST TYPE	HC	CO	CO2	NOXC	FUEL ECONOMY
4106	1974	VOLK	SEDA	97	COLD TRANS	4.85	57.99	326.1	3.35	20.52
					COLD STAB	3.79	44.56	335.6	2.15	21.25
IDLE HC,PPM/HEXANE				310.	HOT TRANS	2.93	29.08	298.4	3.12	25.12
IDLE CO,PCT (MEAS)				6.20						
IDLE CO,PCT (SPEC)				2.00	1975 FTP	3.77	43.10	323.5	2.66	22.01
OTHER TESTS: NONE										
3107	1973	AMC	HORN	232	COLD TRANS	2.45	44.28	495.7	5.21	15.49
					COLD STAB	1.37	39.63	546.5	2.27	14.48
IDLE HC,PPM/HEXANE				178.	HOT TRANS	2.03	23.31	459.5	4.82	17.66
IDLE CO,PCT (MEAS)				5.00						
IDLE CO,PCT (SPEC)				1.50	1975 FTP	1.77	36.13	512.3	3.57	15.44
OTHER TESTS: NONE										
3108	1973	BUIC	CNTR	455	COLD TRANS	7.82	67.97	767.9	3.11	9.87
					COLD STAB	3.28	42.97	799.8	2.04	10.11
IDLE HC,PPM/HEXANE				183.	HOT TRANS	2.91	21.24	676.8	3.10	12.34
IDLE CO,PCT (MEAS)				1.92						
IDLE CO,PCT (SPEC)				1.00	1975 FTP	4.11	42.19	759.7	2.55	10.58
OTHER TESTS: NONE										
3109	1973	BUIC	LESA	350	COLD TRANS	3.54	67.10	766.0	5.39	10.05
					COLD STAB	3.76	76.75	732.6	3.08	10.26
IDLE HC,PPM/HEXANE				125.	HOT TRANS	5.60	54.92	624.9	5.36	12.18
IDLE CO,PCT (MEAS)				3.00						
IDLE CO,PCT (SPEC)				1.00	1975 FTP	4.22	68.81	710.1	4.18	10.67
OTHER TESTS: NONE										
3110	1973	CADI	DEVI	472	COLD TRANS	3.65	65.82	889.4	4.64	8.84
					COLD STAB	2.41	20.69	916.3	4.34	9.28
IDLE HC,PPM/HEXANE				360.	HOT TRANS	2.40	16.25	785.6	5.72	10.84
IDLE CO,PCT (MEAS)				1.80						
IDLE CO,PCT (SPEC)				1.00	1975 FTP	2.66	28.77	875.1	4.78	9.56
OTHER TESTS: NONE										

EMISSION RESULTS IN GRAMS PER MILE
FUEL ECONOMY IN MILES PER GALLON

APPENDIX E

LISTING OF FEDERAL TEST PROCEDURE RESULTS ON INDIVIDUAL VEHICLES

WASHINGTON D.C.

VEHICLE NUMBER	YEAR	MAKE	MODEL	CID	TEST TYPE	HC	CO	CO2	NOXC	FUEL ECONOMY
3111	1973	CHEV	VEGA	140	COLD TRANS	5.07	85.31	421.2	4.12	15.53
					COLD STAB	4.40	97.66	356.5	2.55	16.94
IDLE HC,PPM/HEXANE				300.	HOT TRANS	3.25	55.78	356.6	4.86	19.53
IDLE CO,PCT (MEAS)				6.20						
IDLE CO,PCT (SPEC)				1.20	1975 FTP	4.23	83.69	369.8	3.51	17.24
OTHER TESTS: NONE										
3112	1973	CHEV	MONT	350	COLD TRANS	2.81	47.09	672.8	3.96	11.74
					COLD STAB	1.72	52.39	699.5	1.94	11.27
IDLE HC,PPM/HEXANE				80.	HOT TRANS	2.12	30.28	587.0	3.80	13.84
IDLE CO,PCT (MEAS)				2.10						
IDLE CO,PCT (SPEC)				1.20	1975 FTP	2.05	45.27	663.3	2.87	11.98
OTHER TESTS: NONE										
3113	1973	CHEV	CAMA	350	COLD TRANS	2.68	22.50	675.1	3.42	12.35
					COLD STAB	1.02	12.27	993.2	2.06	8.74
IDLE HC,PPM/HEXANE				42.	HOT TRANS	1.93	16.11	624.8	3.29	13.53
IDLE CO,PCT (MEAS)				.10						
IDLE CO,PCT (SPEC)				1.20	1975 FTP	1.61	15.42	827.2	2.68	10.36
OTHER TESTS: NONE										
3114	1973	CHEV	BELA	350	COLD TRANS	3.08	85.04	868.2	2.28	8.77
					COLD STAB	1.76	32.29	865.1	1.63	9.63
IDLE HC,PPM/HEXANE				140.	HOT TRANS	2.47	44.16	764.4	2.15	10.55
IDLE CO,PCT (MEAS)				.13						
IDLE CO,PCT (SPEC)				1.20	1975 FTP	2.22	46.39	838.2	1.91	9.67
OTHER TESTS: NONE										
3115	1973	CHEV	NOVA	350	COLD TRANS	3.78	53.97	623.0	2.43	12.33
					COLD STAB	2.24	60.64	631.8	1.08	12.09
IDLE HC,PPM/HEXANE				135.	HOT TRANS	2.27	34.15	537.7	2.40	14.83
IDLE CO,PCT (MEAS)				2.60						
IDLE CO,PCT (SPEC)				1.20	1975 FTP	2.56	52.04	604.3	1.72	12.78
OTHER TESTS: NONE										

EMISSION RESULTS IN GRAMS PER MILE
FUEL ECONOMY IN MILES PER GALLON

APPENDIX E

LISTING OF FEDERAL TEST PROCEDURE RESULTS ON INDIVIDUAL VEHICLES

WASHINGTON D.C.

VEHICLE NUMBER	YEAR	MAKE	MODEL	CID	TEST TYPE	HC	CO	CO2	NOXC	FUEL ECONOMY
3116	1973	DODG	DART	225	COLD TRANS	5.05	98.48	460.6	5.88	14.06
					COLD STAB	4.52	109.53	413.2	3.61	14.80
IDLE HC,PPM/HEXANE				290.	HOT TRANS	4.06	76.35	406.4	5.79	16.46
IDLE CO,PCT (MEAS)				6.00						
IDLE CO,PCT (SPEC)				.50	1975 FTP	4.50	98.20	421.1	4.67	15.05
OTHER TESTS: NONE										
3117	1973	FORD	PINT	122	COLD TRANS	2.63	24.81	367.7	3.12	21.38
					COLD STAB	1.72	6.18	417.2	1.91	20.53
IDLE HC,PPM/HEXANE				110.	HOT TRANS	2.20	11.02	336.2	3.18	24.62
IDLE CO,PCT (MEAS)				.16						
IDLE CO,PCT (SPEC)				1.50	1975 FTP	2.04	11.34	384.9	2.50	21.69
OTHER TESTS: NONE										
3118	1973	FORD	TORI	351	COLD TRANS	6.84	134.78	597.0	5.00	10.69
					COLD STAB	4.59	125.85	597.9	2.48	10.95
IDLE HC,PPM/HEXANE				200.	HOT TRANS	3.25	65.01	555.1	6.20	13.30
IDLE CO,PCT (MEAS)				4.90						
IDLE CO,PCT (SPEC)				.50	1975 FTP	4.69	111.09	586.1	4.01	11.44
OTHER TESTS: NONE										
3119	1973	FORD	MAVE	302	COLD TRANS	5.28	77.55	645.4	2.83	11.32
					COLD STAB	4.77	90.05	638.3	1.35	11.17
IDLE HC,PPM/HEXANE				25.	HOT TRANS	3.92	55.90	567.2	2.46	13.30
IDLE CO,PCT (MEAS)				.06						
IDLE CO,PCT (SPEC)				.40	1975 FTP	4.64	78.16	620.4	1.96	11.71
OTHER TESTS: NONE										
3120	1973	FORD	TORI	351	COLD TRANS	4.14	33.97	638.2	6.95	12.59
					COLD STAB	3.79	28.69	619.7	3.76	13.11
IDLE HC,PPM/HEXANE				280.	HOT TRANS	3.75	18.06	566.9	6.60	14.62
IDLE CO,PCT (MEAS)				.51						
IDLE CO,PCT (SPEC)				.50	1975 FTP	3.85	26.87	609.1	5.19	13.38
OTHER TESTS: NONE										

EMISSION RESULTS IN GRAMS PER MILE
FUEL ECONOMY IN MILES PER GALLON

APPENDIX E

LISTING OF FEDERAL TEST PROCEDURE RESULTS ON INDIVIDUAL VEHICLES

WASHINGTON D.C.

VEHICLE NUMBER	YEAR	MAKE	MODEL	CID	TEST TYPE	HC	CO	CO2	NOXC	FUEL ECONOMY
3121	1973	FORD	LTD	400	COLD TRANS	3.50	36.06	717.0	4.78	11.31
					COLD STAB	3.38	59.95	706.0	4.19	10.94
IDLE HC,PPM/HEXANE				168.	HOT TRANS	2.57	28.86	635.4	4.58	12.88
IDLE CO,PCT (MEAS)				2.70						
IDLE CO,PCT (SPEC)				.30	1975 FTP	3.19	46.55	689.0	4.42	11.49
OTHER TESTS: NONE										
3122	1973	MERC	MONG	400	COLD TRANS	2.64	34.12	763.9	3.76	10.75
					COLD STAB	1.97	18.47	737.1	2.79	11.49
IDLE HC,PPM/HEXANE				150.	HOT TRANS	1.98	17.66	641.2	3.34	13.15
IDLE CO,PCT (MEAS)				.13						
IDLE CO,PCT (SPEC)				.50	1975 FTP	2.11	21.47	716.5	3.14	11.73
OTHER TESTS: NONE										
3123	1973	OLDS	98	455	COLD TRANS	1.93	31.51	1086.4	2.94	7.77
					COLD STAB	.47	3.99	1106.2	2.18	7.97
IDLE HC,PPM/HEXANE				60.	HOT TRANS	1.60	5.19	972.0	2.89	9.01
IDLE CO,PCT (MEAS)				.08						
IDLE CO,PCT (SPEC)				.30	1975 FTP	1.08	9.98	1065.5	2.53	8.18
OTHER TESTS: NONE										
3124	1973	OLDS	CUTL	350	COLD TRANS	3.13	18.08	682.3	5.42	12.32
					COLD STAB	2.62	9.83	661.1	3.16	12.96
IDLE HC,PPM/HEXANE				160.	HOT TRANS	2.55	11.70	581.6	5.06	14.60
IDLE CO,PCT (MEAS)				1.10						
IDLE CO,PCT (SPEC)				1.00	1975 FTP	2.71	12.04	643.8	4.14	13.22
OTHER TESTS: NONE										
3125	1973	PLYM	SATE	318	COLD TRANS	3.82	48.83	623.2	4.38	12.46
					COLD STAB	3.34	50.21	612.1	2.77	12.65
IDLE HC,PPM/HEXANE				195.	HOT TRANS	2.93	27.43	542.9	4.49	14.91
IDLE CO,PCT (MEAS)				2.80						
IDLE CO,PCT (SPEC)				.50	1975 FTP	3.33	43.71	595.5	3.57	13.15
OTHER TESTS: NONE										

EMISSION RESULTS IN GRAMS PER MILE
FUEL ECONOMY IN MILES PER GALLON

APPENDIX E

LISTING OF FEDERAL TEST PROCEDURE RESULTS ON INDIVIDUAL VEHICLES

WASHINGTON D.C.

VEHICLE NUMBER	YEAR	MAKE	MODEL	CID	TEST TYPE	HC	CO	CO2	NOXC	FUEL ECONOMY
3126	1973	PLYM	VALI	225	COLD TRANS	2.20	34.84	448.3	3.91	17.40
					COLD STAB	1.19	8.02	464.3	2.52	18.46
IDLE HC,PPM/HEXANE				95.	HOT TRANS	1.50	14.93	403.0	3.04	20.58
IDLE CO,PCT (MEAS)				.15						
IDLE CO,PCT (SPEC)				.50	1975 FTP	1.48	15.43	444.3	2.95	18.75
OTHER TESTS: NONE										
3127	1973	PONT	GRNV	455	COLD TRANS	18.11	302.76	685.0	.79	7.29
					COLD STAB	4.45	62.31	824.5	2.38	9.48
IDLE HC,PPM/HEXANE				130.	HOT TRANS	3.76	31.84	710.2	6.93	11.50
IDLE CO,PCT (MEAS)				1.30						
IDLE CO,PCT (SPEC)				.60	1975 FTP	7.07	103.49	764.6	3.29	9.35
OTHER TESTS: NONE										
3128	1973	PONT	LEMA	350	COLD TRANS	4.22	83.30	840.5	3.27	9.01
					COLD STAB	3.64	57.31	660.1	4.36	11.65
IDLE HC,PPM/HEXANE				160.	HOT TRANS	3.12	43.95	584.7	5.79	13.37
IDLE CO,PCT (MEAS)				4.40						
IDLE CO,PCT (SPEC)				.60	1975 FTP	3.62	59.01	676.7	4.53	11.37
OTHER TESTS: NONE										
3129	1973	DATS	610	108	COLD TRANS	3.63	62.51	359.6	1.83	18.91
					COLD STAB	3.08	40.21	369.2	1.36	20.07
IDLE HC,PPM/HEXANE				260.	HOT TRANS	2.72	32.09	309.8	2.08	24.06
IDLE CO,PCT (MEAS)				5.00						
IDLE CO,PCT (SPEC)				1.50	1975 FTP	3.10	42.58	351.0	1.65	20.75
OTHER TESTS: NONE										
3130	1973	OPEL	1900	116	COLD TRANS	5.19	101.00	335.2	1.61	17.39
					COLD STAB	3.59	85.21	352.1	.81	17.84
IDLE HC,PPM/HEXANE				210.	HOT TRANS	3.22	64.96	299.5	1.27	21.55
IDLE CO,PCT (MEAS)				5.85						
IDLE CO,PCT (SPEC)				2.50	1975 FTP	3.82	82.93	334.3	1.10	18.62
OTHER TESTS: NONE										

EMISSION RESULTS IN GRAMS PER MILE
FUEL ECONOMY IN MILES PER GALLON

APPENDIX E

LISTING OF FEDERAL TEST PROCEDURE RESULTS ON INDIVIDUAL VEHICLES

WASHINGTON D.C.

VEHICLE NUMBER	YEAR	MAKE	MODEL	CID	TEST TYPE	HC	CO	CO2	NOXC	FUEL ECONOMY
3131	1973	TOYO	CORO	120	COLD TRANS	4.10	55.59	461.3	3.84	15.80
					COLD STAB	2.44	41.96	470.3	2.27	16.32
IDLE HC,PPM/HEXANE			360.		HOT TRANS	1.50	18.92	424.9	2.90	19.32
IDLE CO,PCT (MEAS)			6.50							
IDLE CO,PCT (SPEC)			4.00		1975 FTP	2.53	38.48	456.1	2.77	16.92
OTHER TESTS: NONE										
3132	1973	VOLK	TRAN	103	COLD TRANS	3.32	38.09	540.6	2.39	14.53
					COLD STAB	1.90	24.89	629.4	1.54	13.16
IDLE HC,PPM/HEXANE			900.		HOT TRANS	2.51	28.07	471.7	2.15	16.95
IDLE CO,PCT (MEAS)			5.00							
IDLE CO,PCT (SPEC)			3.00		1975 FTP	2.36	28.48	568.1	1.88	14.31
OTHER TESTS: NONE										
3133	1973	VOLK	SEDA	97	COLD TRANS	4.46	63.99	357.0	2.75	18.81
					COLD STAB	3.06	68.39	377.5	1.56	17.94
IDLE HC,PPM/HEXANE			2000.		HOT TRANS	3.05	50.41	325.3	2.50	21.43
IDLE CO,PCT (MEAS)			10.00							
IDLE CO,PCT (SPEC)			3.00		1975 FTP	3.35	62.58	359.1	2.06	18.96
OTHER TESTS: NONE										

EMISSION RESULTS IN GRAMS PER MILE
FUEL ECONOMY IN MILES PER GALLON

Appendix F

LISTING OF EVAPORATIVE EMISSION RESULTS ON INDIVIDUAL VEHICLES

APPENDIX F

LISTING OF EVAPORATIVE EMISSION
RESULTS ON INDIVIDUAL VEHICLES

CALIFORNIA

VEHICLE NUMBER	YEAR	MAKE	MODEL	CID	FUEL	TEST	HC, GRAMS
6018	1976	AMC	PACE	258	INDOLENE	DIURNAL	11.19
						HOT SOAK	15.18
						TOTAL	26.38
6018					COMMERCIAL	DIURNAL	5.94
						HOT SOAK	10.30
						TOTAL	16.24
6019	1976	BUIC	REGA	350	INDOLENE	DIURNAL	6.30
						HOT SOAK	6.06
						TOTAL	12.36
6019					COMMERCIAL	DIURNAL	2.13
						HOT SOAK	4.85
						TOTAL	6.98
6022	1976	CHEV	MONT	350	INDOLENE	DIURNAL	.77
						HOT SOAK	4.86
						TOTAL	5.63
6022					COMMERCIAL	DIURNAL	.49
						HOT SOAK	1.68
						TOTAL	2.17
6022	1976	CHEV	MONT	350	INDOLENE	DIURNAL	1.26
						HOT SOAK	4.93
						TOTAL	6.19
6022					COMMERCIAL	DIURNAL	.18
						HOT SOAK	2.03
						TOTAL	2.21
6024	1976	CHEV	VEGA	140	INDOLENE	DIURNAL	4.57
						HOT SOAK	1.61
						TOTAL	6.18
6024					COMMERCIAL	DIURNAL	3.04
						HOT SOAK	1.54
						TOTAL	4.58
6026	1976	CHEV	CAMA	305	INDOLENE	DIURNAL	.41
						HOT SOAK	5.05
						TOTAL	5.46
6026					COMMERCIAL	DIURNAL	1.36
						HOT SOAK	2.55
						TOTAL	3.91

APPENDIX F

LISTING OF EVAPORATIVE EMISSION
RESULTS ON INDIVIDUAL VEHICLES

CALIFORNIA

VEHICLE NUMBER	YEAR	MAKE	MODEL	CID	FUEL	TEST	HC, GRAMS
6029	1976	DODG	ASPE	318	INDOLENE	DIURNAL	15.04
						HOT SOAK	2.36
						TOTAL	17.40
6029					COMMERCIAL	DIURNAL	3.80
						HOT SOAK	1.50
						TOTAL	5.29
6031	1976	FORD	PINT	140	INDOLENE	DIURNAL	2.04
						HOT SOAK	4.02
						TOTAL	6.06
6031					COMMERCIAL	DIURNAL	.34
						HOT SOAK	1.99
						TOTAL	2.33
6033	1976	FORD	GRAN	302	INDOLENE	DIURNAL	.78
						HOT SOAK	9.86
						TOTAL	10.64
6033					COMMERCIAL	DIURNAL	.72
						HOT SOAK	.86
						TOTAL	1.58
6033	1976	FORD	GRAN	302	INDOLENE	DIURNAL	.70
						HOT SOAK	.86
						TOTAL	1.56
6033					COMMERCIAL	DIURNAL	1.10
						HOT SOAK	7.33
						TOTAL	8.43
6035	1976	FORD	GRAN	302	INDOLENE	DIURNAL	11.00
						HOT SOAK	14.26
						TOTAL	25.26
6035					COMMERCIAL	DIURNAL	4.35
						HOT SOAK	4.85
						TOTAL	9.20
6037	1976	MERC	MONG	351	INDOLENE	DIURNAL	.44
						HOT SOAK	7.86
						TOTAL	8.30
6037					COMMERCIAL	DIURNAL	.59
						HOT SOAK	2.10
						TOTAL	2.69

APPENDIX F

LISTING OF EVAPORATIVE EMISSION
RESULTS ON INDIVIDUAL VEHICLES

CALIFORNIA

VEHICLE NUMBER	YEAR	MAKE	MODEL	CID	FUEL	TEST	HC, GRAMS
6038	1976	MERC	BOBC	140	INDOLENE	DIURNAL	1.59
						HOT SOAK	2.78
						TOTAL	4.37
6038					COMMERCIAL	DIURNAL	.79
						HOT SOAK	1.06
						TOTAL	1.85
6041	1976	OLDS	VIST	455	INDOLENE	DIURNAL	10.86
						HOT SOAK	5.59
						TOTAL	16.45
6041					COMMERCIAL	DIURNAL	3.48
						HOT SOAK	1.75
						TOTAL	5.23
6042	1976	PLYM	VOLA	225	INDOLENE	DIURNAL	16.42
						HOT SOAK	5.33
						TOTAL	21.75
6042					COMMERCIAL	DIURNAL	7.51
						HOT SOAK	4.38
						TOTAL	11.89
6043	1976	PLYM	VOLA	318	INDOLENE	DIURNAL	2.43
						HOT SOAK	2.32
						TOTAL	4.75
6043					COMMERCIAL	DIURNAL	5.69
						HOT SOAK	1.64
						TOTAL	7.33
6045	1976	PONT	GRNP	400	INDOLENE	DIURNAL	2.27
						HOT SOAK	9.63
						TOTAL	11.90
6045					COMMERCIAL	DIURNAL	3.11
						HOT SOAK	8.66
						TOTAL	11.77
6047	1976	DATS	610	119	INDOLENE	DIURNAL	15.97
						HOT SOAK	2.80
						TOTAL	18.77
6047					COMMERCIAL	DIURNAL	8.06
						HOT SOAK	2.09
						TOTAL	10.15

APPENDIX F

LISTING OF EVAPORATIVE EMISSION
RESULTS ON INDIVIDUAL VEHICLES

CALIFORNIA

VEHICLE NUMBER	YEAR	MAKE	MODEL	CID	FUEL	TEST	HC, GRAMS
6048	1976	TOYO	CORR	97	INDOLENE	DIURNAL	9.86
						HOT SOAK	.97
						TOTAL	10.83
6048					COMMERCIAL	DIURNAL	3.40
						HOT SOAK	.55
						TOTAL	3.95
6049	1976	TOYO	CORO	133	INDOLENE	DIURNAL	23.28
						HOT SOAK	1.29
						TOTAL	24.57
6049					COMMERCIAL	DIURNAL	3.24
						HOT SOAK	.40
						TOTAL	3.64
6050	1976	VOLK	SEDA	97	INDOLENE	DIURNAL	7.86
						HOT SOAK	1.84
						TOTAL	9.71
6050					COMMERCIAL	DIURNAL	2.27
						HOT SOAK	2.16
						TOTAL	4.43
6051	1976	VOLK	SCIR	97	INDOLENE	DIURNAL	12.21
						HOT SOAK	4.40
						TOTAL	16.61
6051					COMMERCIAL	DIURNAL	2.53
						HOT SOAK	.86
						TOTAL	3.39

Appendix G

LISTING OF HIGHWAY FUEL ECONOMY AND EMISSION RESULTS ON INDIVIDUAL VEHICLES

APPENDIX G

LISTING OF HIGHWAY FUEL ECONOMY AND EMISSION
RESULTS ON INDIVIDUAL VEHICLES

CALIFORNIA

VEHICLE NUMBER	YEAR	MAKE	MODEL	CID	HC	CO	CO2	NOXC	FUEL ECONOMY
7001	1976	CHEV	G10V	250	.04	.13	412.1	1.66	21.52
* 7001	TEST NO. D				.07	1.92	694.3	5.80	12.72
7002	1976	CHEV	C10	250	.16	1.53	420.9	1.99	20.94
* 7002	TEST NO. D				.13	1.35	522.7	3.40	16.90
7003	1976	CHEV	C10	250	.07	.21	430.7	5.55	20.58
* 7003	TEST NO. D				.07	.36	472.2	5.78	18.76
7004	1976	CHEV	SCOT	250	.05	.97	467.5	4.33	18.92
* 7004	TEST NO. D				.06	1.27	543.1	7.26	16.28
7005	1976	DODG	B100	225	.15	1.07	435.9	1.24	20.26
* 7005	TEST NO. D				.15	.93	504.7	1.77	17.52
7006	1976	DODG	CUST	318	.10	.66	513.7	2.59	17.23
* 7006	TEST NO. D				.07	.66	581.9	3.27	15.22
7007	1976	FORD	E100	300	.21	1.68	483.1	1.49	18.24
* 7007	TEST NO. D				.25	3.04	575.7	2.14	15.27
7008	1976	FORD	F100	360	1.67	33.15	481.3	.67	16.48
* 7008	TEST NO. D				1.76	33.00	556.5	1.46	14.46
7009	1976	FORD	E100	300	.14	.44	466.3	2.40	18.99
* 7009	TEST NO. D				.14	1.07	556.8	3.69	15.88
7010	1976	TOYO	SR5	133	.04	.17	361.7	3.09	24.51
* 7010	TEST NO. D				.05	.19	394.2	4.38	22.49
6018	1976	AMC	PACE	258	.05	.14	490.3	1.14	18.09
6019	1976	BUIC	REGA	350	.12	1.78	484.0	2.73	18.22
6020	1976	BUIC	REGA	350	.06	.19	446.0	4.38	19.88
6021	1976	CADI	COUP	500	.11	.28	619.9	1.07	14.30
6022	1976	CHEV	MONT	350	.06	.00	493.2	1.77	17.99
6023	1976	CHEV	MONT	350	.07	.06	561.8	2.05	15.79
6024	1976	CHEV	VEGA	140	.81	20.93	317.6	1.73	25.14
6025	1976	CHEV	CAPR	400	.11	.04	544.4	1.73	16.29
6026	1976	CHEV	CAMA	305	.09	4.22	504.1	1.22	17.37
6027	1976	CHEV	NOVA	250	.11	.00	498.1	1.90	17.80
6028	1976	CHEV	CHEV	85	.07	.21	286.1	2.28	30.96
6029	1976	DODG	ASPE	318	.08	.10	478.5	1.68	18.53
6030	1976	DODG	ASPE	225	.09	.57	442.6	2.57	20.00

EMISSION RESULTS IN GRAMS PER MILE
FUEL ECONOMY IN MILES PER GALLON

*NOTE: Test No. D utilized the load setting as specified in the FTP for 1978 model-year light-duty trucks.

APPENDIX G

LISTING OF HIGHWAY FUEL ECONOMY AND EMISSION
RESULTS ON INDIVIDUAL VEHICLES

CALIFORNIA

VEHICLE NUMBER	YEAR	MAKE	MODEL	CID	HC	CO	CO2	NOXC	FUEL ECONOMY
6031	1976	FORD	PINT	140	.29	.25	321.0	2.28	27.54
6032	1976	FORD	LTD	400	.17	.70	587.8	1.53	15.06
6033	1976	FORD	GRAN	302	.34	.29	460.9	1.71	19.19
6034	1976	FORD	GRAN	250	.04	.40	468.9	3.43	18.90
6035	1976	FORD	GRAN	302	.20	1.22	604.3	1.08	14.63
6036	1976	FORD	ELIT	351	.23	.84	578.3	1.49	15.29
6037	1976	MERC	MONG	351	.13	2.37	605.9	1.33	14.55
6038	1976	MERC	BOBC	140	.27	.40	282.6	2.08	31.24
6039	1976	OLDS	OMEG	250	.14	.01	464.4	1.37	19.09
6040	1976	OLDS	CUTL	350	.06	.16	496.1	1.40	17.87
6041	1976	OLDS	VIST	455	.04	.11	534.1	1.29	16.61
6042	1976	PLYM	VOLA	225	.08	.21	516.7	1.86	17.16
6043	1976	PLYM	VOLA	318	.09	4.22	516.6	1.86	16.95
6044	1976	PONT	FIRE	350	.11	.04	486.3	2.33	18.24
6045	1976	PONT	GRNP	400	.09	0.00	508.2	2.43	17.45
6046	1976	DATS	B210	85	.10	.54	248.7	2.60	35.52
6047	1976	DATS	610	119	.13	.61	331.1	2.55	26.70
6048	1976	TOYO	CORR	97	.05	.21	284.4	2.30	31.15
6049	1976	TOYO	CORO	133	.09	.85	377.9	1.78	23.39
6050	1976	VOLK	SEDA	97	.04	.45	254.3	1.83	34.79
6051	1976	VOLK	SCIR	97	.13	.38	251.5	2.08	35.15

EMISSION RESULTS IN GRAMS PER MILE
FUEL ECONOMY IN MILES PER GALLON

APPENDIX G

LISTING OF HIGHWAY FUEL ECONOMY AND EMISSION
RESULTS ON INDIVIDUAL VEHICLES

ST. LOUIS

VEHICLE NUMBER	YEAR	MAKE	MODEL	CID	HC	CO	CO2	NOXC	FUEL ECONOMY
7002	1976	CHEV	C10	350	.40	14.03	549.3	3.08	15.50
7003	1976	CHEV	C10	350	.30	13.93	525.6	2.87	16.18
7005	1976	DODG	B100	318	.12	1.31	490.7	2.62	18.00
7007	1976	FORD	CLUB	302	1.00	4.94	434.0	6.44	19.95
7008	1976	FORD	F150	360	2.85	50.94	460.9	1.78	16.14
7010	1976	TOYO	TRUC	140	.37	3.73	353.7	4.94	24.60
6018	1976	AMC	HORN	258	.39	1.88	391.1	6.86	22.46
6019	1976	BUIC	STAW	350	.08	.66	498.3	5.63	17.77
6020	1976	BUIC	SKYL	231	.28	4.55	338.1	3.47	25.64
6021	1976	CADI	ELDO	500	.61	9.86	600.8	2.88	14.36
6022	1976	CHEV	IMPA	350	.07	.53	534.7	3.43	16.56
6023	1976	CHEV	MONT	350	.36	9.85	494.9	2.91	17.35
6024	1976	CHEV	VEGA	140	.49	8.69	303.6	2.50	27.84
6025	1976	CHEV	STAW	400	.10	.98	524.0	4.52	16.88
6026	1976	CHEV	ELCA	305	.09	.47	383.5	2.46	23.08
6027	1976	CHEV	NOVA	250	.17	1.33	338.0	2.08	26.06
6029	1976	DODG	STAW	318	.37	.78	428.7	7.31	20.59
6030	1976	DODG	ASPE	225	.38	5.30	384.9	2.61	22.50
6031	1976	FORD	MUST	140	.27	.55	344.1	3.85	25.67
6032	1976	FORD	STAW	400	.27	1.15	584.1	2.02	15.13
6033	1976	FORD	STAW	351	.24	.90	529.0	2.28	16.71
6034	1976	FORD	GRAN	250	.48	.54	470.3	2.28	18.78
6035	1976	FORD	GRAN	302	.41	.52	444.0	1.88	19.89
6036	1976	FORD	TORI	351	.22	1.18	530.5	2.21	16.65
6037	1976	MERC	COME	250	.35	.34	436.9	2.24	20.24
6038	1976	MERC	MONA	200	.28	.03	399.3	1.78	22.18
6039	1976	OLDS	CUTL	260	.30	.67	492.4	2.19	17.95
6040	1976	OLDS	CUTL	350	1.54	2.30	472.2	.46	18.46
6041	1976	OLDS	DELT	455	.57	4.05	536.5	2.20	16.30
6042	1976	PLYM	DUST	225	.40	4.63	332.0	1.80	26.06
6043	1976	PLYM	VOLA	318	2.43	3.07	429.1	1.63	20.09
6044	1976	PONT	LEMA	350	.05	.29	465.6	3.99	19.04
6045	1976	PONT	GRNP	400	.81	7.01	490.9	2.13	17.59

EMISSION RESULTS IN GRAMS PER MILE
FUEL ECONOMY IN MILES PER GALLON

APPENDIX G

LISTING OF HIGHWAY FUEL ECONOMY AND EMISSION
RESULTS ON INDIVIDUAL VEHICLES

ST. LOUIS

VEHICLE NUMBER	YEAR	MAKE	MODEL	CID	HC	CO	CO2	NOXC	FUEL ECONOMY
6046	1976	DATS	B210	85	.88	2.56	229.6	4.04	37.55
6047	1976	DATS	B210	85	.70	3.83	253.2	1.25	33.94
6048	1976	TOYO	CORO	97	1.05	4.33	295.2	6.15	29.07
6049	1976	TOYO	CELI	133	.29	9.93	324.6	5.22	26.02
6050	1976	VOLK	SEDA	97	2.15	70.29	186.7	.50	29.20
6051	1976	VOLK	RABB	97	1.19	10.23	237.8	4.08	34.45

EMISSION RESULTS IN GRAMS PER MILE
FUEL ECONOMY IN MILES PER GALLON

APPENDIX G

LISTING OF HIGHWAY FUEL ECONOMY AND EMISSION
RESULTS ON INDIVIDUAL VEHICLES

WASHINGTON D.C.

VEHICLE NUMBER	YEAR	MAKE	MODEL	CID	HC	CO	CO2	NOXC	FUEL ECONOMY
7001	1976	CHEV	G10	350	.05	.51	529.4	2.29	16.73
7002	1976	CHEV	G10	350	.05	.56	490.1	2.45	18.07
7003	1976	CHEV	G10	350	.05	.44	474.9	2.68	18.65
7004	1976	CHEV	G10	350	.19	1.54	463.4	2.47	19.03
7005	1976	DODG	B100	318	.06	.11	472.0	2.17	18.79
7006	1976	DODG	B100	225	.22	10.16	413.9	1.30	20.62
7007	1976	FORD	E100	300	.10	.11	453.7	2.08	19.54
7008	1976	FORD	E100	351	1.19	3.04	490.5	4.33	17.79
7009	1976	FORD	F100	360	.53	4.77	528.1	2.26	16.52
7010	1976	DATS	620	119	.79	6.87	294.9	4.54	28.80
6018	1976	AMC	PACE	258	.30	1.76	398.7	2.10	22.06
6019	1976	BUIC	REGA	350	.05	.16	424.5	2.47	20.89
6020	1976	BUIC	ELEC	455	.23	2.72	524.3	3.12	16.77
6021	1976	CADI	DEVI	500	.08	.47	554.6	1.46	15.97
6022	1976	CHEV	MONT	350	.06	1.21	491.5	2.88	17.98
6023	1976	CHEV	MALI	305	.10	.38	414.2	4.10	21.38
6024	1976	CHEV	MONZ	140	.14	1.75	307.9	3.77	28.53
6025	1976	CHEV	MALI	305	.09	2.36	407.8	2.62	21.55
6026	1976	CHEV	MONT	350	.06	.59	468.8	2.87	18.89
6027	1976	CHEV	CAMA	250	.25	1.44	339.2	3.96	25.93
6028	1976	CHEV	CHET	85	.07	1.13	294.6	2.28	29.93
6029	1976	DODG	ASPE	318	.29	.72	425.7	1.98	20.75
6030	1976	DODG	ASPE	225	.25	2.27	453.3	4.79	19.40
6031	1976	FORD	PINT	140	.15	.21	274.7	2.74	32.21
6032	1976	FORD	LTD	400	.19	1.72	588.7	2.29	14.99
6033	1976	FORD	TORI	351	.40	3.53	492.4	2.17	17.78
6034	1976	FORD	GRAN	250	.38	16.22	486.4	1.08	17.30
6035	1976	FORD	GRAN	302	.24	.38	491.2	1.32	18.02
6036	1976	FORD	GRAN	302	.32	.27	457.7	1.52	19.33
6037	1976	MERC	MARQ	400	.19	.21	515.8	2.47	17.18
6038	1976	MERC	COME	250	.14	.02	416.0	1.47	21.31
6039	1976	OLDS	CUTL	260	.11	.69	424.7	4.13	20.83
6040	1976	OLDS	CUTL	350	.09	.07	506.7	2.37	17.50

EMISSION RESULTS IN GRAMS PER MILE
FUEL ECONOMY IN MILES PER GALLON

APPENDIX G

LISTING OF HIGHWAY FUEL ECONOMY AND EMISSION
RESULTS ON INDIVIDUAL VEHICLES

WASHINGTON D.C.

VEHICLE NUMBER	YEAR	MAKE	MODEL	CID	HC	CO	CO2	NOXC	FUEL ECONOMY
6041	1976	OLDS	DELT	455	.07	.16	514.1	1.87	17.25
6042	1976	PLYM	VOLA	225	.38	1.78	330.2	5.99	26.56
6043	1976	PLYM	FURY	318	.15	.12	422.6	6.24	20.97
6044	1976	PONT	GRNP	350	.08	.08	428.5	2.52	20.69
6045	1976	PONT	CATA	400	.08	.21	475.1	2.75	18.66
6046	1976	DATS	B210	85	.95	2.53	241.2	5.42	35.75
6047	1976	DATS	710	119	.42	7.83	317.2	3.83	26.83
6048	1976	TOYO	CORO	97	.86	4.97	261.0	4.24	32.69
6049	1976	TOYO	CORO	133	.50	5.68	274.8	4.25	31.11
6050	1976	VOLK	RABB	97	.07	.18	278.2	1.88	31.84
6051	1976	VOLK	RABB	97	.12	.20	263.0	1.72	33.66

EMISSION RESULTS IN GRAMS PER MILE
FUEL ECONOMY IN MILES PER GALLON

Appendix H

LISTING OF MODAL RESULTS ON INDIVIDUAL VEHICLES

APPENDIX H

LISTING OF MODAL RESULTS ON INDIVIDUAL VEHICLES

CALIFORNIA

	VEH	YEAR	MAKE	MODL	CID	VEH	YEAR	MAKE	MODL	CID
	7001	1976	CHEV	G10V	250	7002	1976	CHEV	C10	250
MODE NO.	HC	CO	CO2	NOXC	FUEL ECONOMY	HC	CO	CO2	NOXC	FUEL ECONOMY
1	2.40	70.78	948.4	5.92	8.32	4.71	78.71	1080.2	6.61	7.28
2	.04	.51	380.2	.33	23.29	.66	32.80	348.8	.43	22.05
3	.16	17.06	1861.5	1.64	4.70	1.84	69.02	1441.1	2.08	5.71
4	.23	6.14	664.2	1.49	13.16	1.03	27.76	682.8	2.49	12.16
5	.02	.69	537.5	3.36	16.48	.08	1.83	607.4	3.15	14.54
6	.04	.24	320.8	.56	27.63	.85	2.63	253.9	.52	34.04
7	1.84	103.77	609.8	5.05	11.40	.75	30.51	800.4	9.40	10.43
8	.03	.31	308.7	1.34	28.70	.35	1.48	258.6	1.76	33.88
9	.04	.48	583.3	4.18	15.19	.07	1.96	617.5	5.33	14.30
10	.03	.30	276.3	.87	32.06	.91	9.85	227.5	1.02	36.11
11	1.60	91.93	664.9	4.97	10.90	1.17	44.60	768.8	6.84	10.53
12	.06	.77	327.2	1.15	27.01	1.20	11.76	257.9	1.27	31.68
13	1.10	61.71	675.4	6.34	11.44	1.34	38.14	785.0	7.49	10.45
14	.04	.17	339.1	1.45	26.14	.78	6.56	258.1	1.17	32.76
15	0.00	.08	355.4	.68	24.97	.14	10.50	352.3	.58	24.04
16	0.00	1.56	923.5	.84	9.58	.80	67.50	662.8	.69	11.51
17	.96	45.12	660.8	5.30	12.08	1.93	40.88	788.4	7.36	10.33
18	.04	.35	323.2	.53	27.41	.94	8.37	269.5	.43	31.07
19	.37	16.15	612.9	4.66	13.88	1.12	31.64	687.3	6.23	11.98
20	.05	.32	382.9	.68	23.14	.97	15.71	315.0	.58	25.89
21	3.45	173.68	580.2	2.00	10.27	3.52	106.79	753.6	5.82	9.52
22	.11	.40	351.9	1.46	25.15	1.11	11.73	260.3	1.01	31.45
23	.57	23.15	941.3	3.89	9.06	4.22	64.73	922.6	4.62	8.55
24	.03	.66	509.3	4.33	17.39	.04	1.43	646.1	5.41	13.69
25	.04	.35	376.4	1.61	23.54	.54	4.66	271.9	1.46	31.59
26	.04	1.25	514.9	.87	17.17	.24	22.02	393.1	.51	20.71
27	.21	7.52	637.6	6.54	13.65	.67	15.77	715.9	6.59	11.95
28	.04	.57	374.2	1.40	23.65	.82	12.03	285.2	1.25	28.94
29	.33	11.31	704.7	2.36	12.27	1.70	53.38	815.0	3.70	9.81
30	.03	.36	511.6	6.66	17.32	.06	2.83	675.4	7.69	13.05
31	.02	.38	424.0	1.81	20.90	.39	3.64	307.7	1.67	28.21
32	.04	1.00	490.5	.68	18.03	.45	25.24	389.0	.66	20.63
BAG (CALC.)	.32	16.12	498.0	2.92	16.93	.75	17.66	493.6	3.41	16.95
BAG (ACT.)	.35	15.83	509.3	2.92	16.58	.79	16.61	490.8	3.27	17.09
33	.01	.00	96.3	.03	92.12	.37	11.56	80.0	.03	89.34
34	.19	0.00	1120.0	.38	7.92	4.45	124.29	979.9	.53	7.46
35	.04	0.00	947.1	.66	9.37	.27	5.13	920.9	.54	9.54
36	.03	.01	612.7	.50	14.48	.16	1.71	576.3	.42	15.32
37	.03	.00	346.9	.45	25.57	.08	.36	350.3	.69	25.28
38	.04	0.00	388.3	.86	22.85	.05	0.00	381.3	.85	23.27
39	.02	0.00	441.6	1.44	20.09	.04	.00	439.0	3.04	20.21

EMISSION RESULTS IN GRAMS PER MILE (PER MINUTE FOR IDLE)
FUEL ECONOMY IN MILES PER GALLON (PER MINUTE FOR IDLE)

APPENDIX H

LISTING OF MODAL RESULTS ON INDIVIDUAL VEHICLES

CALIFORNIA

	VEH	YEAR	MAKE	MODL	CID	VEH	YEAR	MAKE	MODL	CID
	7003	1976	CHEV	C10	250	7004	1976	CHEV	SCOT	250
MODE NO.	HC	CO	CO2	NOXC	FUEL ECONOMY	HC	CO	CO2	NOXC	FUEL ECONOMY
1	3.08	37.98	966.4	10.04	8.57	.92	39.64	1071.3	10.35	7.81
2	.07	.97	393.9	1.51	22.43	0.00	1.60	407.2	1.12	21.66
3	.11	.66	1255.1	11.99	7.06	.01	3.07	1161.9	5.31	7.61
4	.84	8.15	666.9	6.16	13.01	.04	.75	830.3	8.66	10.67
5	.09	.97	572.9	6.40	15.44	.19	6.16	696.4	8.99	12.56
6	.04	.52	236.8	1.06	37.34	.06	.65	276.3	2.27	31.99
7	1.08	29.93	762.1	11.55	10.92	3.99	392.89	720.6	3.71	6.57
8	.03	.78	289.8	3.12	30.49	.08	.59	310.7	2.74	28.46
9	.08	.31	644.7	10.25	13.75	.25	7.31	688.6	11.25	12.66
10	.03	.62	229.9	2.10	38.43	.05	.59	290.0	2.25	30.49
11	.98	35.57	726.1	10.76	11.30	2.76	218.09	789.2	5.98	7.78
12	.05	.85	244.1	1.80	36.14	.19	.86	332.7	2.40	26.52
13	1.00	34.82	732.6	10.83	11.23	1.76	135.55	819.1	8.25	8.55
14	.03	.29	284.3	2.73	31.16	.01	.47	347.3	3.01	25.50
15	.00	1.08	283.6	1.57	31.11	0.00	0.00	377.5	1.52	23.51
16	.05	3.59	843.7	1.32	10.45	0.00	0.00	943.8	.89	9.40
17	1.26	33.77	714.0	8.60	11.51	.76	31.02	862.8	10.41	9.71
18	.03	.46	260.6	1.22	33.95	.03	.25	356.3	2.38	24.87
19	.79	10.71	598.7	9.11	14.36	1.21	106.56	758.2	6.44	9.55
20	.04	.60	307.6	1.44	28.75	.12	.31	353.8	2.66	25.02
21	2.74	142.80	727.3	5.89	9.24	4.07	373.42	778.0	3.47	6.44
22	.07	.56	277.0	2.15	31.91	.10	.82	354.3	3.12	24.94
23	1.32	22.87	885.9	7.98	9.58	.16	3.68	1004.2	10.63	8.78
24	.06	.77	573.8	7.48	15.43	.63	36.64	630.7	7.09	12.86
25	.03	.62	317.8	4.27	27.84	.04	.35	360.3	3.90	24.59
26	.04	1.49	434.4	4.27	20.32	.02	.34	471.3	1.78	18.81
27	.30	7.27	639.8	9.77	13.61	.72	41.75	737.2	9.43	11.02
28	.04	.90	288.1	3.64	30.65	.05	.75	365.2	3.06	24.22
29	1.09	15.38	778.4	7.44	11.01	.08	.54	829.2	8.73	10.69
30	.07	.98	602.2	8.75	14.70	1.86	225.63	608.5	3.92	9.16
31	.03	1.10	330.0	4.89	26.74	.10	.45	416.9	4.39	21.24
32	.04	2.61	320.5	2.91	27.33	.17	.47	476.6	1.02	18.57
BAG (CALC.)	.30	9.32	474.3	5.90	18.12	.61	42.84	545.4	5.53	14.44
BAG (ACT.)	.33	9.48	465.8	5.73	18.42	.58	44.97	537.0	5.42	14.56
33	.02	.00	72.5	.05	122.30	.01	.00	82.3	.06	107.81
34	.31	.01	850.5	.56	10.42	.19	0.00	1008.7	.36	8.79
35	.27	.01	706.4	.92	12.55	.07	.00	605.7	.36	14.65
36	.14	0.00	452.4	.69	19.60	.03	.00	571.7	.60	15.52
37	.09	0.00	304.4	2.01	29.13	.02	0.00	357.2	1.32	24.84
38	.06	0.00	353.0	1.86	25.13	.03	0.00	413.4	3.65	21.47
39	.04	0.00	440.8	7.56	20.13	.03	0.00	511.6	6.64	17.35

EMISSION RESULTS IN GRAMS PER MILE (PER MINUTE FOR IDLE)
FUEL ECONOMY IN MILES PER GALLON (PER MINUTE FOR IDLE)

APPENDIX H

LISTING OF MODAL RESULTS ON INDIVIDUAL VEHICLES

CALIFORNIA

	VEH	YEAR	MAKE	MODL	CID	VEH	YEAR	MAKE	MODL	CID
	7005	1976	DODG	B100	225	7006	1976	DODG	CUST	318
MODE NO.	HC	CO	CO2	NOXC	FUEL ECONOMY	HC	CO	CO2	NOXC	FUEL ECONOMY
1	7.63	106.80	871.4	5.07	8.35	.46	17.57	1084.4	9.64	7.97
2	.84	2.15	310.7	.44	28.02	1.66	2.48	638.2	.05	13.71
3	2.53	7.08	1145.1	6.75	7.62	.05	49.27	1207.9	2.94	6.90
4	2.61	24.92	677.5	2.28	12.24	.02	.49	962.9	4.57	9.21
5	.19	1.01	457.5	2.82	19.31	.06	.27	719.9	5.96	12.32
6	.20	.23	259.9	.39	34.02	1.34	.56	331.7	.07	26.35
7	.95	24.48	604.4	8.30	13.74	.11	.21	692.6	13.97	12.80
8	.38	.27	373.1	.57	23.69	.73	.28	437.1	.39	20.18
9	.15	1.51	586.0	3.31	15.07	.02	.17	657.6	7.12	13.49
10	.52	.39	286.6	.43	30.72	.71	3.32	344.9	.27	25.19
11	1.20	23.16	626.7	7.39	13.31	.10	3.42	806.5	10.70	10.93
12	.97	.71	311.8	.52	28.09	.92	3.36	423.1	.11	20.58
13	1.75	28.46	598.8	7.54	13.67	.13	7.51	858.8	10.89	10.19
14	.37	.31	311.4	.59	28.35	.82	1.14	373.7	.29	23.48
15	.09	.47	292.7	.76	30.21	.55	.78	370.0	.16	23.80
16	.35	0.00	653.2	.59	13.56	.70	5.68	931.5	0.00	9.42
17	2.98	46.00	615.2	5.72	12.73	.16	7.18	843.9	9.24	10.37
18	.39	.10	294.6	.41	29.98	.82	2.29	354.8	.09	24.59
19	1.75	25.44	533.1	3.03	15.34	.09	1.50	828.7	8.46	10.68
20	.85	.23	350.6	.52	25.10	.91	4.08	404.0	.07	21.47
21	2.94	48.90	608.8	8.25	12.77	.54	14.85	904.1	13.65	9.55
22	.83	.63	316.9	.63	27.69	.78	4.74	403.2	.19	21.49
23	5.73	56.69	793.5	3.76	9.85	.17	21.10	905.0	7.98	9.46
24	.14	2.54	465.2	3.30	18.90	.05	.37	665.4	8.06	13.32
25	.22	.87	350.8	.78	25.16	.84	.69	432.5	.29	20.35
26	.19	2.03	424.2	1.33	20.74	.27	.80	589.1	.23	15.01
27	1.48	17.15	590.1	4.41	14.28	.11	4.66	738.7	7.92	11.89
28	.51	1.36	333.6	.68	26.31	.63	4.02	453.1	.38	19.23
29	3.39	19.36	722.8	2.56	11.62	.23	20.18	924.6	5.74	9.27
30	.17	2.88	464.9	3.09	18.89	.08	.45	754.3	10.86	11.75
31	.11	.97	395.8	.99	22.32	.99	.43	432.2	.24	20.36
32	.47	2.70	384.9	1.07	22.72	.37	5.10	511.3	.28	17.05
BAG (CALC.)	.86	8.14	461.8	2.49	18.59	.30	4.41	611.0	3.98	14.34
BAG (ACT.)	.88	8.16	481.6	2.52	17.85	.33	4.15	599.8	3.98	14.61
33	.40	.63	62.8	.03	136.53	.29	3.98	96.0	.03	86.02
34	6.62	37.90	716.9	.37	11.13	4.46	93.81	1094.2	.75	7.07
35	.39	.59	667.3	.75	13.26	.13	.07	924.8	.93	9.59
36	.22	.28	433.2	.57	20.44	.05	0.00	1069.2	1.08	8.30
37	.15	.12	275.9	1.79	32.09	.02	0.00	695.8	1.22	12.75
38	.07	.04	332.0	2.55	26.71	.00	0.00	470.7	1.32	18.86
39	.03	.11	472.2	1.31	18.78	.00	.01	548.5	2.85	16.18

EMISSION RESULTS IN GRAMS PER MILE (PER MINUTE FOR IDLE)
FUEL ECONOMY IN MILES PER GALLON (PER MINUTE FOR IDLE)

APPENDIX H

LISTING OF MODAL RESULTS ON INDIVIDUAL VEHICLES

CALIFORNIA

	VEH	YEAR	MAKE	MODL	CID	VEH	YEAR	MAKE	MODL	CID
	7007	1976	FORD	E100	300	7008	1976	FORD	F100	360
MODE NO.	HC	CO	CO2	NOXC	FUEL ECONOMY	HC	CO	CO2	NOXC	FUEL ECONOMY
1	1.37	54.12	1229.3	2.17	6.73	5.16	106.53	1230.3	2.27	6.28
2	.08	1.62	427.0	.80	20.65	2.03	68.07	295.3	.47	21.71
3	.44	3.73	1625.7	1.90	5.44	8.03	262.72	1433.3	1.08	4.74
4	.37	1.65	836.2	1.62	10.57	2.73	72.16	954.7	1.06	8.24
5	.46	5.38	624.2	1.68	14.00	1.70	30.92	735.3	1.87	11.24
6	.20	.78	421.0	.78	20.99	1.33	24.29	315.7	.21	24.79
7	1.03	85.24	744.7	2.28	10.06	3.42	86.39	796.9	4.99	9.41
8	.35	1.74	425.7	1.28	20.66	1.69	22.14	328.7	.68	24.06
9	.56	9.22	698.9	1.98	12.41	1.22	16.92	627.8	2.47	13.48
10	.35	1.97	350.0	1.04	25.05	1.53	34.80	290.3	.34	25.37
11	.93	47.49	867.3	2.20	9.39	2.98	54.28	816.4	4.94	9.74
12	.49	3.00	360.0	.93	24.23	1.74	46.15	316.1	.40	22.52
13	.85	42.58	859.6	2.15	9.55	2.65	52.11	806.6	3.74	9.90
14	.27	2.32	379.7	1.14	23.10	1.86	28.50	355.1	.52	21.87
15	.17	0.00	598.5	.74	14.82	1.65	107.37	237.5	.80	21.57
16	.17	10.41	1227.2	1.47	7.13	0.00	119.90	899.2	0.00	8.16
17	1.29	48.63	865.7	1.43	9.38	2.75	43.22	952.3	2.75	8.63
18	.13	3.52	430.6	.85	20.33	1.44	32.54	286.9	.34	25.91
19	.79	31.17	662.1	1.28	12.44	2.16	44.34	711.5	1.98	11.26
20	.20	3.45	530.7	1.04	16.53	1.87	45.84	348.4	.40	20.82
21	1.55	105.33	860.6	2.45	8.61	4.08	97.15	920.4	4.57	8.17
22	.41	2.17	464.6	1.24	18.91	1.93	36.08	343.5	.61	21.84
23	.73	23.50	985.0	1.57	8.67	3.91	100.88	1090.5	1.49	7.04
24	.46	6.82	560.4	1.59	15.50	1.44	34.57	678.6	2.38	12.03
25	.25	1.95	477.8	1.36	18.43	1.67	24.62	340.2	.48	23.10
26	.16	3.55	662.2	.72	13.28	3.09	131.97	562.7	.85	11.38
27	.56	15.19	734.9	1.91	11.67	1.62	25.86	801.3	2.98	10.48
28	.39	2.89	467.3	1.21	18.76	1.64	31.64	376.9	.52	20.55
29	.34	9.44	713.6	1.67	12.17	3.43	103.60	960.6	1.10	7.82
30	.50	15.56	605.5	1.85	14.05	2.32	57.15	719.3	2.80	10.87
31	.31	2.28	634.8	1.85	13.88	1.59	27.55	429.9	.84	18.56
32	.12	4.73	777.0	.93	11.31	2.85	102.62	462.0	.71	14.04
BAG (CALC.)	.42	13.94	605.1	1.49	14.12	1.93	43.33	551.4	1.66	14.19
BAG (ACT.)	.46	12.72	599.5	1.46	14.29	2.02	43.07	554.2	1.61	14.13
33	.43	12.08	95.4	.03	76.69	.62	12.17	99.6	.10	73.54
34	5.27	169.50	1072.5	.58	6.55	7.52	164.51	1234.5	.95	5.85
35	.13	.01	909.1	.76	9.76	3.75	84.83	596.8	.46	11.96
36	.09	.04	587.6	.45	15.10	2.45	56.73	411.3	.25	17.46
37	.11	.02	390.9	.55	22.69	1.89	61.95	353.1	.54	19.45
38	.12	.13	393.2	1.02	22.54	1.24	18.59	462.0	.35	17.93
39	.17	2.06	521.5	2.70	16.90	1.28	16.88	353.5	1.01	23.11

EMISSION RESULTS IN GRAMS PER MILE (PER MINUTE FOR IDLE)
FUEL ECONOMY IN MILES PER GALLON (PER MINUTE FOR IDLE)

APPENDIX H

LISTING OF MODAL RESULTS ON INDIVIDUAL VEHICLES

CALIFORNIA

	VEH	YEAR	MAKE	MODL	CID	VEH	YEAR	MAKE	MODL	CID
	7009	1976	FORD	E100	300	7010	1976	TOYO	SR5	133
MODE NO.	HC	CO	CO2	NOXC	FUEL ECONOMY	HC	CO	CO2	NOXC	FUEL ECONOMY
1	.88	24.18	920.6	3.69	9.23	.27	4.67	784.1	3.88	11.20
2	.25	.75	445.1	.73	19.85	.01	1.47	554.9	.62	15.93
3	.18	3.55	862.1	2.08	10.22	0.00	1.40	845.5	1.67	10.47
4	.23	2.12	553.6	2.73	15.92	.06	.55	609.6	2.21	14.53
5	.27	1.52	483.7	2.72	18.23	.01	.45	538.9	2.76	16.45
6	1.13	.79	395.0	.76	22.20	.01	.58	280.4	1.04	31.54
7	.51	8.84	582.2	4.36	14.85	1.71	94.92	441.7	3.62	14.89
8	.62	.46	459.6	1.99	19.20	.05	.49	326.4	2.61	27.12
9	.26	2.68	511.2	3.39	17.19	.10	5.02	406.1	4.18	21.42
10	1.05	.90	371.9	1.18	23.56	0.00	.55	261.7	1.50	33.80
11	.45	16.42	752.6	3.50	11.38	.70	38.35	558.9	3.81	14.28
12	1.08	1.32	416.5	1.44	21.03	.05	.90	287.5	1.32	30.70
13	.36	13.58	718.1	3.15	11.98	.67	34.85	544.8	3.55	14.75
14	.78	.54	402.8	1.50	21.86	.01	.33	284.0	2.18	31.19
15	.10	.44	389.4	.85	22.74	0.00	.24	301.7	.37	29.39
16	.05	1.38	784.5	1.21	11.28	0.00	.85	861.1	.85	10.29
17	.50	15.29	675.4	2.41	12.66	.02	1.50	616.5	3.65	14.34
18	1.08	.52	407.8	.96	21.54	0.00	.63	280.3	1.21	31.55
19	.36	7.48	516.3	2.40	16.77	0.00	.89	596.1	2.94	14.85
20	1.28	.51	433.4	.84	20.25	0.00	.97	370.6	1.19	23.85
21	.68	40.22	725.2	3.12	11.23	1.76	81.08	492.1	3.00	14.20
22	.89	.39	460.3	1.52	19.14	.04	.37	328.9	1.98	26.92
23	.33	3.70	642.5	2.23	13.67	.04	3.55	683.1	2.35	12.88
24	.18	.95	478.5	2.75	18.47	.16	11.80	487.4	2.52	17.52
25	.38	0.00	483.0	2.21	18.33	.02	.61	363.7	2.99	24.34
26	.08	0.00	611.1	1.35	14.52	.01	1.73	632.0	.83	13.98
27	.31	3.96	623.0	2.67	14.08	.19	7.78	477.2	3.36	18.11
28	.69	0.00	449.2	1.66	19.66	.01	.74	351.2	2.60	25.19
29	.16	.21	678.4	2.60	13.07	.07	1.93	527.4	1.82	16.72
30	.22	2.45	400.5	2.95	21.91	.21	8.49	445.0	2.55	19.34
31	.26	.39	598.1	2.34	14.80	.02	.53	386.7	3.67	22.90
32	.06	.12	544.3	1.09	16.29	.01	1.54	478.0	.64	18.47
BAG (CALC.)	.43	3.70	547.7	2.33	16.00	.20	11.46	423.6	2.66	20.07
BAG (ACT.)	.47	3.55	544.9	2.36	16.08	.22	12.49	426.4	2.69	19.87
33	.05	.00	82.2	.03	107.72	.01	.01	39.5	.02	224.45
34	.49	.03	988.8	.55	8.96	.25	.01	776.7	.36	11.42
35	.10	.14	804.7	.92	11.02	.04	.31	879.0	.55	10.09
36	.07	.05	536.8	.74	16.52	.03	.21	573.6	.37	15.46
37	.08	.07	353.1	.83	25.11	.00	.18	450.3	.69	19.70
38	.09	.18	416.5	1.36	21.28	.04	.12	312.0	2.16	28.41
39	.08	.51	500.3	3.15	17.70	.03	.13	374.7	4.44	23.67

EMISSION RESULTS IN GRAMS PER MILE (PER MINUTE FOR IDLE)
FUEL ECONOMY IN MILES PER GALLON (PER MINUTE FOR IDLE)

APPENDIX H

LISTING OF MODAL RESULTS ON INDIVIDUAL VEHICLES

CALIFORNIA

	VEH	YEAR	MAKE	MODL	CID	VEH	YEAR	MAKE	MODL	CID
	7011	1975	CHEV	G10V	350	7012	1975	CHEV	C10	350
MODE NO.	HC	CO	CO2	NOXC	FUEL ECONOMY	HC	CO	CO2	NOXC	FUEL ECONOMY
1	2.56	19.55	1190.1	6.43	7.22	.75	.28	1112.2	3.18	7.96
2	.49	1.26	452.4	.65	19.47	.52	.19	459.7	.42	19.23
3	.30	5.45	1594.6	2.62	5.53	2.48	.75	1394.7	1.56	6.32
4	1.36	8.32	837.6	3.84	10.38	.93	.40	931.3	2.07	9.49
5	.19	0.00	545.6	4.44	16.25	.87	.25	736.7	2.30	12.00
6	.67	.87	314.7	1.06	27.89	.71	.12	319.3	.39	27.58
7	.53	1.27	691.4	6.10	12.77	.59	3.10	946.3	4.92	9.31
8	.26	1.25	379.0	3.11	23.25	.51	.18	381.1	1.17	23.17
9	.13	.90	617.2	6.98	14.34	.21	.31	743.3	3.70	11.92
10	.33	1.38	329.0	2.43	26.72	.57	.18	346.9	.61	25.43
11	.41	5.09	809.7	7.77	10.84	.29	.73	953.1	5.27	9.29
12	.39	1.62	406.9	2.59	21.61	.81	.23	370.2	.73	23.79
13	.49	5.27	753.7	8.41	11.62	.28	.49	947.4	4.69	9.35
14	.24	.48	420.4	3.36	21.04	.46	.12	354.9	.91	24.89
15	.02	3.15	415.2	1.28	21.12	.45	.93	359.1	.53	24.52
16	.03	0.00	1162.5	1.15	7.63	.69	0.00	720.5	.68	12.28
17	.69	6.22	750.0	6.32	11.65	.32	.18	970.4	3.41	9.13
18	.32	1.29	370.2	1.70	23.78	.61	.08	396.8	.59	22.25
19	.44	3.16	653.9	3.70	13.44	.26	.13	831.5	2.83	10.66
20	.43	1.05	499.8	1.91	17.65	.81	.06	416.0	.68	21.20
21	.98	17.77	735.1	6.43	11.59	.46	1.04	1043.7	5.99	8.48
22	.32	1.00	473.2	3.28	18.65	.67	.10	449.7	1.04	19.64
23	.84	7.31	948.6	4.78	9.22	.52	.19	1014.2	2.55	8.73
24	.08	1.03	520.1	5.62	17.00	.22	.16	697.6	2.70	12.71
25	.20	.72	484.9	4.85	18.24	.48	.12	415.3	1.44	21.28
26	.13	2.52	648.8	.68	13.59	.32	.09	695.7	.94	12.74
27	.39	3.25	598.1	8.18	14.68	.24	.22	814.2	3.54	10.89
28	.32	1.03	462.0	3.86	19.10	.60	.10	430.3	.97	20.53
29	.32	2.41	776.7	4.05	11.36	.50	.08	875.3	1.45	10.12
30	.10	.41	514.1	4.08	17.23	.22	.35	717.1	3.01	12.36
31	.20	.67	552.0	5.52	16.03	.39	.17	456.9	1.50	19.36
32	.17	0.00	500.3	.78	17.72	.35	.05	461.8	1.08	19.17
BAG (CALC.)	.30	2.30	569.5	4.88	15.46	.42	.29	623.1	2.27	14.20
BAG (ACT.)	.31	2.21	558.2	4.88	15.77	.46	.24	620.3	2.22	14.27
33	.10	.00	89.5	.03	98.85	.06	.00	86.6	.03	102.32
34	1.49	1.20	1055.7	.56	8.35	1.67	.01	1056.3	.36	8.36
35	1.96	.00	979.2	.46	9.01	1.99	12.28	771.6	.54	11.13
36	.12	.05	1082.0	1.91	8.20	1.27	4.74	539.4	.54	16.11
37	.12	0.00	385.9	.53	22.98	4.32	.16	470.5	1.12	18.32
38	.05	.02	457.0	2.79	19.41	.40	.15	507.8	.85	17.43
39	.05	.02	526.6	6.18	16.85	.09	.09	556.0	2.04	15.95

EMISSION RESULTS IN GRAMS PER MILE (PER MINUTE FOR IDLE)
FUEL ECONOMY IN MILES PER GALLON (PER MINUTE FOR IDLE)

APPENDIX H

LISTING OF MODAL RESULTS ON INDIVIDUAL VEHICLES

CALIFORNIA

	VEH	YEAR	MAKE	MODL	CID	VEH	YEAR	MAKE	MODL	CID
	7013	1975	CHEV	G10V	350	7014	1975	DODG	TRAD	318
MODE NO.	HC	CO	CO2	NOXC	FUEL ECONOMY	HC	CO	CO2	NOXC	FUEL ECONOMY
1	.43	.82	1545.6	2.31	5.73	1.63	19.79	1293.2	4.06	6.68
2	.08	1.64	354.1	.22	24.87	.88	11.20	393.1	1.20	21.46
3	.31	1.01	1605.3	2.15	5.52	3.21	57.49	1323.1	2.74	6.23
4	.09	.69	1067.7	1.21	8.30	.31	2.42	798.2	2.31	11.05
5	.14	.32	925.2	1.67	9.58	.28	.11	690.6	2.88	12.83
6	.57	.30	315.2	.27	27.95	.28	.11	386.8	.60	22.88
7	2.01	190.56	1011.5	1.68	6.74	.39	.36	860.0	4.93	10.30
8	.51	.62	354.8	.74	24.83	.11	.14	477.6	.89	18.56
9	.16	.65	886.1	2.19	10.00	.12	.11	751.7	2.74	11.80
10	.28	.34	329.2	.39	26.84	.21	.66	397.1	.71	22.26
11	.36	15.63	1126.1	2.58	7.71	.18	.64	841.6	4.63	10.53
12	.31	.74	337.9	.47	26.10	.11	.32	446.3	1.04	19.85
13	.60	55.22	1073.5	2.24	7.64	.19	2.90	853.2	4.34	10.34
14	.21	.37	369.8	.53	23.92	.07	.23	425.4	.90	20.83
15	0.00	.72	327.7	.40	26.99	.12	.39	393.6	1.07	22.49
16	0.00	1.31	734.2	.83	12.05	.20	20.98	817.5	.50	10.43
17	.22	1.15	1135.7	1.93	7.80	.29	5.30	907.0	3.11	9.69
18	.28	.67	320.1	.24	27.56	.18	.69	418.3	.82	21.13
19	.25	.89	983.9	1.91	9.00	.15	.53	730.0	2.68	12.14
20	.34	.70	364.0	.19	24.24	.33	2.00	488.0	.89	18.03
21	1.26	141.53	1145.5	2.01	6.47	.50	5.90	904.1	5.03	9.70
22	.27	.43	392.8	.47	22.51	.20	.91	471.0	.93	18.76
23	.23	2.14	1233.9	1.84	7.17	.50	13.85	912.5	2.59	9.48
24	.17	.95	828.1	1.66	10.69	.10	.22	614.2	2.47	14.44
25	.32	.86	450.1	.61	19.61	.08	.26	540.5	1.39	16.40
26	.22	3.05	592.0	.35	14.85	.06	.68	683.1	1.25	12.97
27	.24	3.28	929.8	1.83	9.49	.18	2.58	754.8	3.29	11.69
28	.34	1.15	486.8	.60	18.13	.24	1.14	512.9	1.13	17.22
29	.28	2.63	1078.4	.99	8.19	.53	15.93	712.7	2.37	12.00
30	.30	14.50	899.9	1.64	9.61	.14	.30	626.4	3.44	14.15
31	.27	.58	506.3	.70	17.47	.07	.23	596.6	1.43	14.86
32	.25	2.00	411.5	.40	21.36	.17	.74	712.3	1.34	12.43
BAG (CALC.)	.29	11.68	683.7	1.19	12.63	.23	2.52	636.0	2.17	13.85
BAG (ACT.)	.33	12.28	680.9	1.25	12.66	.25	2.52	647.4	2.17	13.61
33	.14	.10	89.6	.06	98.38	.38	4.92	82.3	.03	97.28
34	2.22	10.78	1133.4	.57	7.67	4.78	64.05	988.2	.37	8.04
35	1.31	4.13	614.1	.28	14.21	.27	.42	711.7	.37	12.44
36	.21	.04	583.9	.44	15.18	.16	.16	551.0	.44	16.08
37	.30	.02	542.3	.34	16.34	.13	0.00	369.9	2.64	23.97
38	.15	.08	547.5	.55	16.19	.09	0.00	445.4	2.46	19.91
39	.13	.16	599.2	1.52	14.80	.10	.02	505.3	2.76	17.55

EMISSION RESULTS IN GRAMS PER MILE (PER MINUTE FOR IDLE)
FUEL ECONOMY IN MILES PER GALLON (PER MINUTE FOR IDLE)

APPENDIX H

LISTING OF MODAL RESULTS ON INDIVIDUAL VEHICLES

CALIFORNIA

	VEH	YEAR	MAKE	MODL	CID	VEH	YEAR	MAKE	MODL	CID
	7015	1975	FORD	F100	300	7016	1975	FORD	F100	360
MODE NO.	HC	CO	CO2	NOXC	FUEL ECONOMY	HC	CO	CO2	NOXC	FUEL ECONOMY
1	1.93	71.94	859.7	1.85	9.07	4.54	110.19	1252.1	4.12	6.16
2	.11	.78	308.5	.60	28.63	1.00	18.43	322.2	.40	25.05
3	.33	2.30	1044.0	3.40	8.46	4.59	177.19	1250.7	1.56	5.75
4	.78	20.99	583.6	1.61	14.34	3.47	89.83	829.1	1.02	9.04
5	.43	6.52	454.3	1.01	19.05	3.58	70.78	755.6	2.60	10.11
6	.35	.39	231.0	.40	38.13	1.82	16.71	240.3	.10	32.59
7	.73	43.58	614.6	2.41	12.95	4.48	117.97	936.2	6.85	7.81
8	.41	.45	325.1	.76	27.14	1.92	23.83	269.1	.29	28.39
9	.28	2.54	507.2	2.00	17.33	2.11	27.16	792.4	5.71	10.54
10	.29	.66	275.4	.56	32.00	1.44	17.49	242.5	.26	32.32
11	.82	30.47	639.6	2.69	12.86	3.30	59.67	891.7	7.55	8.91
12	.34	1.07	295.8	.75	29.73	1.67	14.80	217.3	.36	36.10
13	.68	28.90	647.3	2.65	12.77	3.51	66.36	917.5	6.63	8.59
14	.27	.75	333.2	.81	26.48	1.59	20.07	265.4	.46	29.39
15	.05	1.20	331.0	.70	26.64	.87	26.26	260.5	.49	29.15
16	.16	3.05	864.8	.81	10.20	.28	.20	1112.9	.48	7.97
17	.78	29.76	620.5	1.45	13.25	3.87	70.82	949.2	4.16	8.27
18	.27	.91	295.5	.66	29.80	1.69	17.52	294.8	.27	27.08
19	.52	13.37	556.9	1.30	15.32	3.31	47.71	909.3	4.63	8.92
20	.29	1.32	389.8	.77	22.60	1.60	17.77	274.6	.27	28.85
21	1.97	109.41	592.5	2.46	11.52	4.66	112.33	983.8	7.67	7.55
22	.38	1.02	345.1	.88	25.51	1.88	20.61	300.5	.45	26.19
23	1.17	22.65	771.8	1.54	10.94	3.55	83.78	1065.3	2.40	7.35
24	.24	3.27	426.8	1.60	20.51	2.72	42.04	749.3	4.80	10.77
25	.25	.38	405.7	.94	21.80	1.78	23.93	261.3	.52	29.14
26	.12	.74	526.5	1.13	16.81	.86	30.15	430.4	.59	18.47
27	.38	9.13	544.1	1.88	15.86	2.62	40.21	825.9	5.14	9.89
28	.25	.79	369.9	.75	23.86	1.70	25.81	317.2	.56	24.44
29	.59	15.89	591.0	2.15	14.37	4.54	113.87	936.1	1.22	7.86
30	.28	4.13	430.2	1.32	20.28	3.95	93.69	814.3	5.14	9.11
31	.23	.82	449.2	1.20	19.67	1.87	20.88	404.1	.57	20.04
32	.18	2.39	444.9	1.33	19.76	1.43	32.96	339.2	.46	22.44
BAG (CALC.)	.36	10.05	461.4	1.38	18.55	2.35	45.73	566.4	2.31	13.74
BAG (ACT.)	.35	9.79	444.7	1.38	19.25	2.42	45.96	552.3	2.31	14.04
33	.02	.00	69.2	.03	128.25	.10	.00	102.3	.10	86.53
34	.25	0.00	829.3	.36	10.69	1.26	0.00	1174.2	.79	7.53
35	.04	0.00	729.9	.72	12.16	.45	0.00	613.6	.40	14.43
36	.02	.00	467.9	.60	18.97	.30	.00	453.7	.40	19.52
37	.03	.00	272.1	.83	32.61	1.58	44.90	375.1	.65	19.69
38	.04	.08	327.4	.86	27.09	1.87	41.78	448.9	.41	17.05
39	.03	.23	405.6	1.80	21.85	1.92	31.93	510.9	1.61	15.65

EMISSION RESULTS IN GRAMS PER MILE (PER MINUTE FOR IDLE)
FUEL ECONOMY IN MILES PER GALLON (PER MINUTE FOR IDLE)

APPENDIX H

LISTING OF MODAL RESULTS ON INDIVIDUAL VEHICLES

CALIFORNIA

	VEH	YEAR	MAKE	MODL	CID	VEH	YEAR	MAKE	MODL	CID
	7017	1975	FORD	E100	351	6018	1976	AMC	PACE	258
MODE NO.	HC	CO	CO2	NOXC	FUEL ECONOMY	HC	CO	CO2	NOXC	FUEL ECONOMY
1	1.57	8.37	1364.3	12.12	6.42	.26	21.03	1631.3	10.38	5.33
2	.45	.43	607.9	.77	14.55	.01	1.51	495.3	.95	17.83
3	.93	1.06	1295.3	4.98	6.83	.16	3.39	1908.7	4.80	4.64
4	.92	2.79	858.4	7.84	10.25	.07	2.26	1187.4	6.50	7.45
5	.73	3.31	745.6	8.56	11.79	.10	10.88	956.6	5.76	9.11
6	1.53	.58	320.2	1.70	27.23	.01	.77	286.1	.60	30.88
7	1.00	10.13	964.2	12.78	9.03	1.95	138.36	912.3	4.76	7.81
8	1.37	1.00	373.9	4.10	23.37	.05	.46	333.5	.54	26.54
9	.56	4.88	792.9	11.90	11.06	.45	19.18	782.3	4.41	10.91
10	.77	.57	368.2	2.40	23.89	.01	.74	301.9	.49	29.28
11	.80	6.17	972.1	14.56	9.02	.63	29.94	881.7	6.18	9.54
12	1.05	.69	412.4	2.54	21.30	.02	1.92	338.5	.58	25.99
13	.72	4.82	935.5	13.63	9.39	.41	18.95	931.5	6.09	9.22
14	.93	.74	416.7	3.96	21.09	.01	.50	354.4	.80	24.99
15	.31	.31	389.5	.89	22.70	0.00	.85	401.1	.72	22.05
16	0.00	1.00	1301.9	1.52	6.81	.02	1.93	1169.2	2.79	7.57
17	.98	4.31	965.9	9.30	9.10	.06	4.02	951.8	5.96	9.26
18	.61	.36	329.6	2.18	26.73	.01	.03	338.5	.88	26.21
19	.84	3.79	870.2	7.61	10.10	.04	3.52	859.6	5.07	10.26
20	1.06	.58	402.7	2.22	21.81	0.00	.44	379.8	1.20	23.33
21	.96	7.71	1058.3	13.17	8.27	1.07	62.64	960.2	6.45	8.36
22	1.00	.88	488.7	3.72	17.99	.01	.34	368.5	.87	24.05
23	.92	3.58	988.3	7.18	8.90	.05	.86	1050.3	4.80	8.44
24	.58	3.56	768.5	8.38	11.44	.20	12.10	698.6	4.59	12.36
25	.90	.93	452.7	5.34	19.42	.01	.50	532.3	1.04	16.65
26	.74	.79	861.0	1.66	10.27	.03	.76	686.8	1.48	12.90
27	.67	3.64	825.0	10.73	10.66	.04	3.60	770.7	4.75	11.43
28	.88	.84	496.9	4.56	17.72	.01	.50	451.5	.87	19.62
29	.71	1.61	1012.7	5.08	8.72	.02	.62	1021.9	3.06	8.68
30	.53	4.33	772.1	8.00	11.37	.30	23.54	625.5	4.54	13.38
31	.93	1.04	502.6	6.14	17.50	.03	.68	450.8	1.10	19.64
32	.76	.55	589.9	1.32	14.96	.01	1.17	566.6	1.02	15.61
BAG (CALC.)	.64	2.44	670.2	7.07	13.13	.18	9.75	642.7	2.71	13.48
BAG (ACT.)	.69	2.34	670.2	6.66	13.13	.20	10.09	631.4	2.60	13.70
33	.18	.02	132.3	.19	66.77	.01	.00	109.7	.28	80.90
34	2.16	.25	1626.5	1.90	5.43	.26	0.00	1333.0	2.08	6.65
35	1.14	.08	801.0	.75	11.03	.10	0.00	665.4	1.13	13.33
36	.66	.09	597.0	.63	14.81	.06	0.00	444.4	.63	19.96
37	.25	.24	611.9	2.18	14.48	.03	0.00	480.7	.37	18.46
38	.23	.41	511.4	4.48	17.31	.03	0.00	418.4	.91	21.21
39	.15	1.46	667.1	8.35	13.25	.14	.02	555.3	1.59	15.97

EMISSION RESULTS IN GRAMS PER MILE (PER MINUTE FOR IDLE)
FUEL ECONOMY IN MILES PER GALLON (PER MINUTE FOR IDLE)

APPENDIX H

LISTING OF MODAL RESULTS ON INDIVIDUAL VEHICLES

CALIFORNIA

	VEH	YEAR	MAKE	MODL	CID	VEH	YEAR	MAKE	MODL	CID
	6019	1976	BUIC	REGA	350	6020	1976	BUIC	REGA	350
MODE NO.	HC	CO	CO2	NOXC	FUEL ECONOMY	HC	CO	CO2	NOXC	FUEL ECONOMY
1	.32	6.52	1339.2	6.19	6.57	.27	2.60	1144.7	13.86	7.72
2	.00	.82	410.5	.35	21.55	.04	.32	364.8	.71	24.29
3	.27	11.76	1399.3	2.45	6.26	.41	6.88	1375.6	5.42	6.40
4	.09	2.68	942.6	3.05	9.37	.39	9.09	790.6	10.02	11.01
5	.08	1.42	804.0	3.68	11.01	.18	2.22	690.5	8.43	12.78
6	.03	.50	313.0	.53	28.28	.13	.19	270.5	1.29	32.72
7	2.76	174.33	813.5	3.70	8.10	.22	3.12	916.9	12.85	9.62
8	.07	.62	331.4	1.61	26.68	.09	.09	261.7	2.41	33.86
9	.05	1.26	769.1	4.48	11.51	.08	.17	758.5	9.22	11.69
10	.02	.55	317.9	1.24	27.84	.07	.15	275.5	1.57	32.16
11	.52	27.00	954.4	6.88	8.89	.15	3.28	932.8	12.47	9.46
12	.04	.81	318.8	1.60	27.72	.11	1.59	273.8	2.20	32.08
13	.29	9.82	991.0	6.75	8.81	.17	4.02	946.1	12.65	9.31
14	.02	.84	350.1	1.58	25.25	.05	.23	297.4	2.40	29.79
15	.04	5.23	437.2	.29	19.92	.33	9.33	315.2	.75	26.82
16	.01	2.98	843.1	.87	10.47	.16	3.27	865.4	0.00	10.19
17	.23	6.90	960.8	5.83	9.13	.22	5.52	948.9	11.84	9.26
18	.04	2.66	356.2	.34	24.62	.11	2.70	343.5	1.13	25.50
19	.16	4.88	828.2	5.14	10.61	.22	5.49	841.8	9.73	10.43
20	.09	3.22	432.6	.47	20.27	.15	3.86	359.7	1.54	24.23
21	1.17	69.77	991.3	5.90	8.03	.20	3.46	996.1	14.07	8.86
22	.05	1.30	415.2	1.74	21.26	.22	3.90	306.7	2.44	28.31
23	.26	10.24	895.7	3.76	9.72	.46	15.34	1026.1	11.23	8.44
24	.11	3.58	654.3	3.72	13.44	.24	5.54	708.9	7.78	12.36
25	.04	1.43	381.0	2.57	23.15	.14	.92	342.6	3.47	25.77
26	.45	11.93	615.9	.42	13.95	.98	32.15	421.7	1.87	18.67
27	.12	3.32	819.4	5.63	10.76	.23	5.97	790.6	10.38	11.08
28	.04	1.25	426.2	2.19	20.72	.32	6.57	345.3	2.52	24.89
29	.44	12.84	851.8	2.50	10.16	.84	26.43	866.0	8.50	9.75
30	.34	13.62	698.6	3.40	12.31	.31	8.38	726.4	8.67	11.98
31	.05	1.29	450.4	3.10	19.61	.17	2.31	363.2	3.73	24.16
32	.31	11.74	486.2	.53	17.55	1.08	33.66	456.8	1.00	17.30
BAG (CALC.)	.21	10.25	611.3	3.26	14.13	.20	4.62	565.2	5.97	15.49
BAG (ACT.)	.23	9.86	602.9	3.17	14.34	.20	4.47	565.2	5.75	15.49
33	.01	.01	92.2	.10	96.17	.03	0.00	98.5	.09	90.07
34	.31	0.00	1108.4	1.13	8.00	.49	0.00	1184.1	.92	7.49
35	.10	0.00	787.9	.56	11.26	.13	.00	825.1	.64	10.75
36	.08	0.00	519.7	.51	17.07	.09	.00	538.2	.49	16.48
37	.12	0.00	434.9	.31	20.39	.04	.00	374.7	.74	23.68
38	.05	0.00	431.9	.96	20.54	.04	0.00	382.0	2.89	23.23
39	.03	.00	504.3	4.10	17.60	.03	0.00	483.2	4.75	18.37

EMISSION RESULTS IN GRAMS PER MILE (PER MINUTE FOR IDLE)
FUEL ECONOMY IN MILES PER GALLON (PER MINUTE FOR IDLE)

APPENDIX H

LISTING OF MODAL RESULTS ON INDIVIDUAL VEHICLES

CALIFORNIA

	VEH	YEAR	MAKE	MODL	CID	VEH	YEAR	MAKE	MODL	CID
	6021	1976	CADI	COUP	500	6022	1976	CHEV	MONT	350
MODE NO.	HC	CO	CO2	NOXC	FUEL ECONOMY	HC	CO	CO2	NOXC	FUEL ECONOMY
1	.45	2.09	1508.6	4.04	5.86	.20	3.16	1422.8	4.27	6.21
2	.04	1.79	528.0	.91	16.72	.04	2.85	489.5	.58	17.96
3	.41	5.59	1325.2	3.56	6.65	.15	0.00	1234.0	2.56	7.19
4	.31	0.00	1046.9	1.72	8.47	.14	3.14	861.7	1.63	10.24
5	.23	1.43	887.5	1.63	9.97	.08	1.20	747.0	2.28	11.85
6	.09	.58	396.3	.57	22.33	.11	1.98	389.6	.56	22.58
7	.56	47.76	975.3	2.96	8.44	1.26	69.71	927.9	2.63	8.52
8	.14	.99	458.3	.72	19.28	.11	0.00	329.7	1.42	26.89
9	.18	8.91	985.6	1.87	8.87	.05	1.61	694.4	3.72	12.73
10	.08	.56	410.2	.59	21.58	.08	1.60	315.7	.86	27.87
11	.20	15.30	1259.3	2.22	6.91	.18	1.52	980.5	5.90	9.02
12	.08	1.16	498.3	.64	17.74	.10	2.90	352.2	1.17	24.86
13	.17	14.66	1178.2	2.29	7.39	.12	1.26	1006.4	5.79	8.80
14	.03	.44	473.5	.79	18.71	.06	.62	304.2	1.11	29.06
15	.05	0.00	586.2	.69	15.14	.01	0.00	396.9	.63	22.36
16	.13	0.00	830.1	2.31	10.69	.16	0.00	698.9	1.98	12.69
17	.25	3.56	1174.3	2.73	7.52	.15	2.40	1124.0	4.39	7.87
18	.06	.71	490.3	.57	18.05	.06	0.00	380.3	.68	23.33
19	.22	2.94	885.4	2.11	9.96	.12	1.40	847.0	3.31	10.45
20	.07	1.83	526.8	.69	16.75	.05	1.66	436.6	.67	20.20
21	.48	73.23	1227.8	2.77	6.60	.55	19.14	1094.5	4.59	7.88
22	.06	1.37	539.1	.78	16.39	.07	.72	365.6	1.25	24.19
23	.25	4.07	1132.8	2.73	7.79	.15	2.42	1230.1	3.49	7.19
24	.16	4.25	761.4	1.45	11.55	.10	.75	741.8	3.33	11.94
25	.08	.42	596.6	.80	14.85	.09	.73	329.6	1.53	26.81
26	.08	0.00	656.1	.65	13.52	0.00	2.05	487.1	.67	18.10
27	.19	4.79	986.1	1.97	8.93	.10	.94	842.0	4.62	10.52
28	.08	.90	552.9	.75	16.01	.07	1.09	376.6	1.20	23.45
29	.23	1.59	914.1	1.92	9.67	.08	2.42	1090.3	2.40	8.11
30	.22	7.06	704.0	1.40	12.40	.14	.88	791.4	3.46	11.19
31	.10	.77	652.7	.87	13.57	.07	.74	398.3	1.76	22.21
32	.08	2.72	765.4	.92	11.53	0.00	3.15	446.3	.65	19.67
BAG (CALC.)	.14	7.69	775.7	1.44	11.26	.12	3.47	608.7	2.62	14.44
BAG (ACT.)	.14	7.26	767.3	1.42	11.39	.13	3.52	622.7	2.57	14.12
33	.03	.00	125.5	.37	70.68	.04	.00	120.9	.19	73.32
34	.67	.01	1543.2	3.59	5.74	.73	0.00	1492.6	1.53	5.94
35	.25	.00	887.2	1.45	9.99	.34	0.00	735.0	.47	12.06
36	.20	.00	534.3	1.10	16.59	.17	0.00	509.0	.38	17.42
37	.16	.00	464.2	.35	19.10	.10	0.00	502.5	.38	17.65
38	.10	.03	519.6	.63	17.07	.05	.01	481.0	.81	18.45
39	.06	.12	610.9	1.09	14.52	.04	.01	514.1	3.26	17.26

EMISSION RESULTS IN GRAMS PER MILE (PER MINUTE FOR IDLE)
FUEL ECONOMY IN MILES PER GALLON (PER MINUTE FOR IDLE)

APPENDIX H

LISTING OF MODAL RESULTS ON INDIVIDUAL VEHICLES

CALIFORNIA

	VEH	YEAR	MAKE	MODL	CID	VEH	YEAR	MAKE	MODL	CID
	6023	1976	CHEV	MONT	350	6024	1976	CHEV	VEGA	140
MODE NO.	HC	CO	CO2	NOXC	FUEL ECONOMY	HC	CO	CO2	NOXC	FUEL ECONOMY
1	.17	1.17	1472.2	5.21	6.02	2.63	92.87	888.9	2.09	8.51
2	.11	1.18	524.1	.29	16.86	1.19	19.31	198.3	.29	38.19
3	.21	2.06	1537.3	2.65	5.76	4.01	119.01	1065.0	1.07	7.02
4	.07	.47	1018.0	2.70	8.71	1.91	73.81	593.5	.88	12.40
5	.04	.20	833.2	3.13	10.65	1.81	53.86	541.6	1.96	14.04
6	.10	.24	370.5	.48	23.91	.87	10.79	131.6	.64	58.67
7	.94	106.71	927.6	2.58	8.08	.95	36.54	793.5	5.10	10.39
8	.11	.83	408.8	1.47	21.62	.06	.09	177.9	2.79	49.81
9	.12	.94	826.2	4.13	10.72	.06	.37	582.1	6.70	15.23
10	.11	.99	388.3	1.05	22.74	.02	.33	200.9	1.99	44.05
11	.24	17.42	1090.5	5.37	7.93	.08	.98	789.0	8.19	11.22
12	.11	1.62	422.2	.96	20.88	.05	.39	170.2	2.18	51.90
13	.13	2.89	1083.9	5.48	8.15	.06	.92	742.0	6.99	11.94
14	.08	.84	445.1	1.41	19.87	.03	.26	211.5	1.80	41.87
15	.09	1.81	596.3	.41	14.81	.03	1.34	244.6	.33	35.97
16	.12	3.15	953.5	.86	9.26	1.53	58.80	242.9	.37	26.09
17	.07	1.27	1096.7	4.37	8.08	1.86	92.61	607.1	2.29	11.70
18	.09	1.07	489.0	.64	18.08	.99	17.00	180.9	.31	42.11
19	.07	1.33	925.3	3.27	9.57	1.70	73.31	602.6	2.57	12.27
20	.11	1.89	528.6	.78	16.69	1.08	25.11	275.2	.31	27.90
21	.49	69.45	1077.0	4.14	7.47	1.11	57.21	743.6	9.25	10.60
22	.08	1.24	493.8	1.28	17.89	.05	.21	239.7	2.35	36.95
23	.11	1.93	1094.2	3.15	8.09	.11	.88	848.5	2.74	10.44
24	.10	1.02	753.6	3.30	11.75	.07	2.35	600.2	4.21	14.69
25	.10	.82	475.3	1.91	18.61	.05	.66	289.7	3.26	30.51
26	.14	1.16	846.4	1.08	10.46	.06	2.81	313.0	.73	27.94
27	.07	.68	927.6	4.12	9.55	1.12	65.86	529.6	3.14	13.94
28	.11	.55	482.6	1.64	18.34	.86	22.88	228.6	1.75	33.20
29	.09	.82	917.2	1.68	9.66	1.69	51.46	559.6	1.26	13.74
30	.16	.53	786.5	2.91	11.27	1.22	53.43	578.6	4.24	13.32
31	.07	.52	503.8	2.24	17.58	.07	.45	271.3	3.60	32.60
32	.09	1.21	676.3	.59	13.08	.04	1.90	299.4	.47	29.34
BAG (CALC.)	.12	6.63	705.3	2.55	12.39	.55	18.70	420.7	3.22	19.64
BAG (ACT.)	.13	6.60	713.7	2.53	12.25	.55	20.01	420.7	3.16	19.55
33	.04	0.00	108.4	.08	81.80	.22	4.55	52.2	.05	147.92
34	.90	0.00	1366.1	.79	6.48	.72	2.77	644.7	.56	13.63
35	.18	0.00	872.0	.79	10.17	.78	2.52	369.1	.37	23.63
36	.24	0.00	543.6	.46	16.31	.78	0.00	328.4	.52	26.82
37	.14	.16	533.0	.46	16.63	1.40	25.39	249.1	.13	30.25
38	.05	.03	506.4	.93	17.52	.89	15.09	271.5	.62	29.78
39	.03	0.00	545.4	2.79	16.27	.55	20.96	339.4	3.70	23.73

EMISSION RESULTS IN GRAMS PER MILE (PER MINUTE FOR IDLE)
FUEL ECONOMY IN MILES PER GALLON (PER MINUTE FOR IDLE)

APPENDIX H

LISTING OF MODAL RESULTS ON INDIVIDUAL VEHICLES

CALIFORNIA

	VEH	YEAR	MAKE	MODL	CID	VEH	YEAR	MAKE	MODL	CID
	6025	1976	CHEV	CAPR	400	6026	1976	CHEV	CAMA	305
MODE NO.	HC	CO	CO2	NOXC	FUEL ECONOMY	HC	CO	CO2	NOXC	FUEL ECONOMY
1	.27	.17	1652.3	2.72	5.37	.14	3.90	1197.4	6.10	7.37
2	.50	0.00	643.7	1.00	13.75	.06	1.07	564.7	.66	15.67
3	.67	.07	1686.0	1.43	5.26	.25	3.40	1679.8	3.73	5.26
4	.21	.05	1040.4	1.04	8.52	.16	3.10	856.5	2.84	10.30
5	.20	.08	949.8	2.06	9.34	.16	3.47	754.8	3.46	11.67
6	.10	.03	445.4	1.07	19.91	.03	.37	250.0	.26	35.41
7	.16	.81	1101.5	4.79	8.04	1.87	108.48	808.5	4.14	9.01
8	.03	.07	515.6	3.79	17.21	.04	.93	456.3	.67	19.38
9	.06	.19	879.8	4.00	10.08	.10	4.43	715.0	5.57	12.29
10	.19	.01	365.8	1.15	24.22	.05	1.65	355.3	.36	24.79
11	.16	.25	1053.6	6.86	8.42	.38	24.10	873.8	6.02	9.72
12	.25	.02	425.8	1.86	20.80	.08	3.63	391.4	.38	22.34
13	.11	.16	1038.0	5.21	8.55	.75	35.95	853.0	6.13	9.73
14	.13	.01	345.5	1.50	25.66	.02	2.26	356.0	.41	24.68
15	.05	0.00	276.4	1.80	32.09	.02	.61	398.5	.35	22.22
16	.50	0.00	1414.8	1.19	6.27	0.00	2.43	1197.4	1.29	7.39
17	.14	.10	1154.4	3.34	7.68	.17	9.44	890.6	4.27	9.80
18	.24	0.00	396.7	1.15	22.33	.01	.57	419.6	.32	21.10
19	.20	.10	967.2	1.82	9.17	.11	4.85	838.8	3.61	10.48
20	.34	.02	514.4	1.16	17.22	.02	.89	486.7	.52	18.18
21	.22	.42	1206.9	7.17	7.35	1.64	92.44	949.3	5.51	8.07
22	.25	.02	419.7	1.61	21.10	.06	5.69	429.4	.35	20.24
23	.26	.07	1266.6	2.09	7.00	.08	3.51	1064.5	3.61	8.29
24	.08	.13	723.8	2.75	12.25	.11	5.46	623.8	3.77	14.03
25	.13	.03	410.5	1.86	21.60	.06	8.08	430.2	.48	20.03
26	.10	0.00	506.5	2.90	17.51	.05	.89	781.5	.80	11.34
27	.11	.09	951.7	4.26	9.32	.10	6.11	763.3	4.08	11.48
28	.22	.02	461.4	1.64	19.21	.04	5.48	462.4	.48	18.84
29	.22	.03	1094.3	1.67	8.10	.04	1.27	831.1	2.47	10.65
30	.11	.25	900.0	3.47	9.85	.48	13.37	646.5	3.91	13.27
31	.09	.04	401.8	2.54	22.07	.07	8.84	487.9	.53	17.68
32	.18	0.00	534.0	2.15	16.60	.01	1.62	636.8	.83	13.88
BAG (CALC.)	.17	.09	698.2	3.13	12.70	.22	12.75	599.4	2.13	14.31
BAG (ACT.)	.18	.09	709.5	3.18	12.50	.23	13.27	613.4	2.07	13.98
33	.06	0.00	128.7	.12	68.87	.03	0.00	137.2	.26	64.65
34	1.38	0.00	1568.9	1.24	5.64	.43	0.00	1645.7	2.33	5.39
35	.89	0.00	801.2	.44	11.04	.19	0.00	821.4	.73	10.80
36	.54	0.00	521.6	.30	16.96	.14	.01	548.2	.54	16.18
37	.15	0.00	429.8	.53	20.63	.16	.00	475.9	.39	18.63
38	.15	.01	486.8	.90	18.22	.03	0.00	461.9	.83	19.21
39	.04	.04	549.6	2.39	16.14	.04	2.77	498.2	1.04	17.65

EMISSION RESULTS IN GRAMS PER MILE (PER MINUTE FOR IDLE)
FUEL ECONOMY IN MILES PER GALLON (PER MINUTE FOR IDLE)

APPENDIX H

LISTING OF MODAL RESULTS ON INDIVIDUAL VEHICLES

CALIFORNIA

	VEH	YEAR	MAKE	MODL	CID	VEH	YEAR	MAKE	MODL	CID
	6027	1976	CHEV	NOVA	250	6028	1976	CHEV	CHEV	85
MODE NO.	HC	CO	CO2	NOXC	FUEL ECONOMY	HC	CO	CO2	NOXC	FUEL ECONOMY
1	.19	.99	1353.1	6.33	6.55	1.10	22.01	638.6	4.31	13.12
2	.09	1.89	276.3	.11	31.74	.04	1.28	241.9	.24	36.37
3	.17	1.58	1392.5	2.63	6.36	.17	1.44	673.8	6.65	13.12
4	.11	.77	924.7	2.40	9.58	.81	3.73	402.3	3.12	21.61
5	.11	.43	773.6	4.44	11.46	.38	4.57	413.2	3.01	21.05
6	.20	.39	318.8	.25	27.73	.04	.47	145.4	.31	60.67
7	.85	36.32	933.8	6.78	8.93	.07	1.40	474.7	4.07	18.60
8	.11	.37	295.8	.89	29.91	.01	.46	295.0	.71	30.01
9	.17	.32	790.8	4.39	11.21	.01	.23	426.4	3.38	20.80
10	.10	.59	293.1	.72	30.15	.02	.38	164.8	.68	53.66
11	.24	.85	911.3	8.16	9.72	.11	5.62	431.8	4.27	20.13
12	.11	1.18	341.8	.91	25.80	.02	1.19	199.6	.32	44.04
13	.19	.75	900.3	7.27	9.84	.23	9.71	482.9	4.39	17.79
14	.08	.55	310.9	.98	28.45	.02	.77	238.0	.72	37.09
15	.09	.93	296.3	.19	29.78	.02	1.13	226.7	.38	38.83
16	.04	3.14	688.4	.79	12.80	.04	4.57	626.4	1.14	14.01
17	.13	1.16	930.6	5.68	9.51	.73	13.15	491.8	3.66	17.24
18	.14	1.41	276.1	.28	31.83	.05	1.19	290.3	.25	30.36
19	.13	.94	888.8	4.75	9.96	1.03	4.64	444.8	4.06	19.49
20	.17	1.78	346.2	.39	25.39	.03	1.25	239.1	.36	36.81
21	.32	4.11	1030.5	8.47	8.55	1.17	70.21	495.9	2.86	14.55
22	.12	1.02	385.8	1.06	22.89	.04	1.37	296.2	.44	29.74
23	.17	2.56	1115.9	3.33	7.92	.37	13.38	530.1	3.90	16.07
24	.16	.20	678.9	4.21	13.06	.09	4.10	388.4	3.56	22.46
25	.10	.14	324.3	1.49	27.32	.03	.64	238.1	1.11	37.10
26	.13	.41	741.0	.39	11.96	.04	2.15	246.4	.43	35.51
27	.16	.20	782.0	5.60	11.34	.27	6.31	449.2	3.69	19.30
28	.12	.16	394.1	1.01	22.49	.02	.68	238.0	.79	37.11
29	.11	.71	960.1	2.43	9.23	.90	7.80	486.8	3.39	17.68
30	.19	.29	763.6	5.47	11.61	.11	3.30	395.5	4.09	22.13
31	.11	.06	348.8	1.30	25.41	.03	.50	211.1	.93	41.86
32	.13	.18	326.9	.38	27.09	.06	.69	263.1	.60	33.57
BAG (CALC.)	.14	1.57	576.3	3.05	15.32	.15	4.42	328.1	2.33	26.46
BAG (ACT.)	.15	1.14	579.1	3.03	15.27	.16	4.40	336.5	2.36	25.81
33	.02	.00	97.2	.06	91.27	.02	.01	53.2	.02	166.64
34	.55	.02	1185.9	.73	7.47	.19	.00	734.5	.38	12.07
35	.33	.01	601.0	.28	14.74	.13	0.00	655.0	.76	13.54
36	.21	.01	544.9	.56	16.27	.08	0.00	351.1	1.46	25.26
37	.39	0.00	419.6	.29	21.09	.06	0.00	307.2	.76	28.87
38	.11	.00	442.1	.63	20.06	.05	.01	256.8	1.22	34.54
39	.04	0.00	495.5	2.67	17.91	.04	.00	294.1	3.79	30.16

EMISSION RESULTS IN GRAMS PER MILE (PER MINUTE FOR IDLE)
FUEL ECONOMY IN MILES PER GALLON (PER MINUTE FOR IDLE)

APPENDIX H

LISTING OF MODAL RESULTS ON INDIVIDUAL VEHICLES

CALIFORNIA

	VEH	YEAR	MAKE	MODL	CID	VEH	YEAR	MAKE	MODL	CID
	6029	1976	DODG	ASPE	318	6030	1976	DODG	ASPE	225
MODE NO.	HC	CO	CO2	NOXC	FUEL ECONOMY	HC	CO	CO2	NOXC	FUEL ECONOMY
1	.28	.55	1512.2	3.68	5.86	1.13	61.50	1289.4	2.34	6.39
2	.13	.18	411.1	.39	21.55	.02	1.35	291.7	.88	30.20
3	.31	.94	1556.6	4.59	5.69	.28	0.00	1333.5	3.46	6.65
4	.14	.12	915.3	2.64	9.69	.28	0.00	851.0	2.91	10.42
5	.12	.07	777.5	2.01	11.41	.43	19.15	682.8	1.93	12.43
6	.10	.02	227.0	.44	39.03	.11	.98	218.8	.51	40.22
7	.14	.61	969.1	3.40	9.15	.48	59.45	986.2	4.94	8.21
8	.15	.22	313.6	.48	28.23	.11	.51	305.1	1.23	28.98
9	.07	.10	755.7	2.46	11.74	.13	16.32	806.3	2.98	10.66
10	.08	.03	313.6	.43	28.27	.08	.53	245.3	.82	36.02
11	.08	.23	951.0	3.53	9.33	.24	36.06	945.5	6.33	8.85
12	.11	.06	333.0	.46	26.62	.07	.49	306.9	1.25	28.83
13	.07	.24	979.5	3.36	9.06	.13	27.69	890.7	4.49	9.50
14	.07	.04	328.5	.67	27.00	.08	.69	343.2	1.41	25.76
15	.04	.06	348.6	.92	25.44	.03	1.00	415.9	.52	21.26
16	.20	.24	771.9	.47	11.48	0.00	2.59	684.8	1.30	12.88
17	.10	.28	1062.9	2.88	8.34	.27	24.68	903.2	1.44	9.41
18	.07	.02	293.7	.71	30.19	.08	.84	310.5	.73	28.44
19	.11	.11	967.4	2.90	9.17	.20	19.37	820.0	1.29	10.43
20	.09	.03	315.4	.63	28.11	.04	1.23	340.6	.74	25.90
21	.10	.59	1095.2	3.93	8.09	.36	60.00	971.6	4.98	8.32
22	.08	.04	352.0	.60	25.19	.07	.86	364.5	1.52	24.25
23	.10	.15	1178.0	3.44	7.53	.15	7.04	978.0	2.18	8.97
24	.06	.09	709.1	2.25	12.51	.13	19.05	625.8	2.83	13.53
25	.08	.06	395.4	.94	22.43	.09	.82	378.0	1.40	23.38
26	.06	.08	469.9	1.27	18.88	0.00	.97	473.9	.58	18.67
27	.07	.12	889.6	2.79	9.97	.12	16.21	768.1	3.41	11.18
28	.07	.06	382.4	.79	23.19	.08	.86	361.6	1.17	24.43
29	.10	.18	1017.0	2.50	8.72	.13	1.68	781.0	2.65	11.32
30	.07	.18	749.9	2.84	11.83	.17	22.25	675.8	1.90	12.48
31	.09	.06	368.4	.91	24.07	.06	.80	463.3	1.26	19.10
32	.08	.12	486.8	1.12	18.22	.03	2.89	405.0	.50	21.67
BAG (CALC.)	.08	.13	620.4	1.63	14.30	.11	9.87	562.1	2.39	15.35
BAG (ACT.)	.09	.20	612.0	1.68	14.49	.11	9.68	559.3	2.34	15.44
33	.04	.18	105.2	.04	84.07	.04	.05	70.5	.07	125.58
34	.55	4.07	1282.8	.36	6.88	.36	.37	884.8	.82	10.01
35	.28	1.44	696.2	.35	12.69	.18	.13	629.2	.91	14.09
36	.15	.69	539.8	.35	16.39	.12	.09	438.7	.80	20.21
37	.10	.26	344.6	1.76	25.70	.10	.03	303.9	2.16	29.17
38	.08	.03	377.3	2.14	23.50	.19	.08	374.5	1.88	23.65
39	.05	.06	469.4	3.12	18.90	.05	.16	458.9	5.07	19.32

EMISSION RESULTS IN GRAMS PER MILE (PER MINUTE FOR IDLE)
FUEL ECONOMY IN MILES PER GALLON (PER MINUTE FOR IDLE)

APPENDIX H

LISTING OF MODAL RESULTS ON INDIVIDUAL VEHICLES

CALIFORNIA

	VEH	YEAR	MAKE	MODL	CID	VEH	YEAR	MAKE	MODL	CID
	6031	1976	FORD	PINT	140	6032	1976	FORD	LTD	400
MODE NO.	HC	CO	CO2	NOXC	FUEL ECONOMY	HC	CO	CO2	NOXC	FUEL ECONOMY
1	.91	3.14	666.5	3.49	13.16	.69	6.93	1791.5	2.76	4.92
2	.20	1.57	242.6	1.35	36.12	.08	2.70	555.4	.63	15.85
3	.86	0.00	738.2	1.97	11.98	.67	6.50	2150.5	1.91	4.10
4	.42	0.00	533.9	2.36	16.58	.51	1.75	1061.9	2.00	8.32
5	.55	2.36	399.5	3.44	21.92	.43	2.21	911.2	3.39	9.69
6	.25	1.19	207.7	.42	42.20	.11	0.00	417.9	.78	21.22
7	.66	28.00	568.8	5.07	14.43	.81	82.36	1090.7	2.70	7.26
8	.27	.87	314.2	1.53	28.05	.16	.60	423.2	.52	20.90
9	.39	1.43	465.4	3.65	18.93	.36	13.19	966.6	2.48	8.98
10	.19	1.65	223.4	1.09	39.16	.09	1.15	358.8	.64	24.60
11	.35	4.32	604.2	5.39	14.50	.49	72.57	1165.5	1.15	6.93
12	.26	1.83	233.6	1.11	37.41	.11	1.39	412.0	.51	21.41
13	.36	2.48	618.1	4.94	14.24	.38	54.74	1199.6	1.24	6.90
14	.23	.53	204.7	1.62	43.03	.07	.29	421.0	.57	21.05
15	.23	1.70	280.2	1.95	31.29	.07	.92	415.9	.41	21.25
16	.46	3.29	580.0	0.00	15.13	0.00	0.00	1045.2	0.00	8.49
17	.62	2.34	597.8	3.75	14.71	.42	5.95	1244.3	2.03	7.07
18	.26	.72	249.2	.60	35.34	.08	.40	364.3	.43	24.30
19	.55	1.99	553.9	2.98	15.89	.36	13.86	1172.0	1.60	7.43
20	.25	2.03	213.2	.72	40.87	.05	1.15	461.8	.51	19.14
21	.59	16.66	674.2	5.48	12.64	.62	90.82	1346.3	1.71	5.95
22	.21	.97	233.3	1.36	37.69	.10	.79	455.6	.45	19.41
23	.63	2.73	664.6	2.97	13.23	.36	2.89	1015.1	2.33	8.69
24	.37	1.12	464.6	4.00	18.98	.26	2.55	712.8	2.74	12.37
25	.27	.69	256.8	1.69	34.30	.12	.82	451.3	.81	19.59
26	.47	0.00	406.0	2.82	21.78	.05	2.34	725.5	.66	12.17
27	.38	1.98	537.3	3.93	16.39	.27	4.59	1026.7	2.30	8.58
28	.30	.85	252.7	1.47	34.81	.10	1.35	480.4	.74	18.38
29	.56	2.12	498.9	2.23	17.61	.31	1.45	1171.6	1.79	7.55
30	.44	2.57	487.5	4.20	18.00	.35	17.12	795.5	1.81	10.78
31	.26	.83	292.5	2.04	30.13	.08	.46	497.4	.56	17.81
32	.24	3.38	350.0	2.75	24.93	.05	2.57	770.1	.41	11.46
BAG (CALC.)	.31	3.07	390.9	2.56	22.37	.20	11.80	744.0	1.18	11.63
BAG (ACT.)	.33	2.71	388.1	2.53	22.56	.23	12.88	763.6	1.15	11.31
33	.05	.00	58.1	.03	152.33	.04	.00	119.3	.06	74.30
34	.60	.01	621.1	.54	14.25	.49	0.00	1510.7	.75	5.87
35	.24	.01	516.4	.46	17.16	.21	1.62	827.7	.19	10.68
36	.18	.04	338.4	.30	26.18	.16	.88	627.0	.32	14.11
37	.30	.12	281.9	2.65	31.36	.16	.02	458.1	.90	19.35
38	.27	.08	286.3	1.15	30.89	.18	.16	501.3	1.31	17.67
39	.26	.22	328.6	3.38	26.91	.11	.46	577.0	1.95	15.35

EMISSION RESULTS IN GRAMS PER MILE (PER MINUTE FOR IDLE)
FUEL ECONOMY IN MILES PER GALLON (PER MINUTE FOR IDLE)

APPENDIX H

LISTING OF MODAL RESULTS ON INDIVIDUAL VEHICLES

CALIFORNIA

	VEH	YEAR	MAKE	MODL	CID	VEH	YEAR	MAKE	MODL	CID
	6033	1976	FORD	GRAN	302	6034	1976	FORD	GRAN	250
MODE NO.	HC	CO	CO2	NOXC	FUEL ECONOMY	HC	CO	CO2	NOXC	FUEL ECONOMY
1	1.07	.85	1214.7	4.02	7.28	.39	6.96	924.0	6.15	9.48
2	.29	.32	410.6	.39	21.54	.06	2.61	461.2	1.14	19.07
3	1.22	.59	1347.6	1.63	6.56	.15	6.73	1223.1	3.50	7.19
4	.85	1.08	747.7	1.95	11.80	.26	2.93	711.0	3.99	12.39
5	.71	.32	602.4	2.98	14.67	.21	2.92	627.3	6.26	14.03
6	.34	.05	322.9	.58	27.39	.04	2.10	354.9	1.21	24.77
7	1.02	3.86	833.0	7.08	10.54	1.59	194.49	650.1	2.58	9.24
8	.45	.29	324.2	.93	27.22	.15	1.78	397.0	2.56	22.17
9	.66	.59	612.1	5.21	14.43	.10	15.41	708.5	3.90	12.11
10	.29	.15	294.7	.68	30.00	.03	2.74	329.5	1.92	26.58
11	.92	1.91	870.1	7.49	10.13	1.44	148.57	743.7	2.70	9.04
12	.33	.19	374.2	.92	23.63	.14	6.43	360.4	1.92	23.93
13	.87	1.05	827.5	7.30	10.67	1.30	114.89	778.0	3.81	9.22
14	.37	.30	398.1	1.04	22.20	.09	3.24	360.1	2.56	24.28
15	.17	0.00	481.8	.40	18.40	.03	2.47	356.3	1.13	24.64
16	.35	0.00	638.5	.59	13.88	0.00	0.00	674.5	.81	13.16
17	.94	.54	791.5	5.33	11.16	1.90	92.71	661.8	5.68	10.91
18	.27	.06	368.2	.67	24.04	.35	12.67	299.4	1.53	27.70
19	.77	.31	644.2	4.63	13.71	1.69	97.14	528.3	3.58	12.93
20	.30	.12	390.9	.71	22.64	.39	20.16	356.8	1.46	22.77
21	1.12	3.84	895.4	9.09	9.81	3.01	282.04	669.2	2.03	7.91
22	.35	.23	384.8	.95	22.98	.29	12.10	368.3	1.84	22.86
23	.79	.60	895.8	2.96	9.87	1.79	94.16	769.2	5.11	9.62
24	.62	.45	575.4	3.95	15.35	1.77	136.10	466.3	3.66	12.94
25	.41	.33	418.7	1.52	21.10	.25	13.20	385.1	1.99	21.83
26	.28	.11	668.7	.63	13.25	.39	26.75	475.3	.62	17.11
27	.77	.58	686.2	5.47	12.87	2.06	130.94	585.9	4.04	11.12
28	.36	.32	440.1	1.17	20.09	.20	10.75	406.9	2.40	20.91
29	.64	.30	719.6	1.82	12.29	1.32	78.28	624.9	4.18	11.80
30	.69	.87	572.3	4.29	15.41	1.99	167.09	466.2	3.04	12.07
31	.44	.41	458.5	1.56	19.27	.25	11.97	494.7	2.05	17.26
32	.28	.14	560.5	.56	15.80	.44	23.04	503.5	.94	16.40
BAG (CALC.)	.52	.69	560.8	2.94	15.75	.74	50.01	521.9	2.92	14.72
BAG (ACT.)	.51	.67	552.4	2.94	15.99	.73	47.40	519.0	2.89	14.90
33	.08	0.00	84.5	.04	104.73	.05	.00	87.8	.27	100.97
34	12.42	244.19	659.4	.35	8.20	.60	.01	1073.7	2.18	8.25
35	2.94	44.52	506.5	.38	15.15	.27	0.00	535.3	.99	16.55
36	.32	0.00	499.4	.68	17.74	.16	.00	357.0	.60	24.83
37	.31	.07	418.8	.52	21.14	.09	.00	328.0	1.24	27.04
38	.31	.10	424.5	1.30	20.85	.06	.03	378.1	2.00	23.46
39	.30	.54	489.8	2.51	18.05	.04	.06	489.0	4.96	18.14

EMISSION RESULTS IN GRAMS PER MILE (PER MINUTE FOR IDLE)
FUEL ECONOMY IN MILES PER GALLON (PER MINUTE FOR IDLE)

APPENDIX H

LISTING OF MODAL RESULTS ON INDIVIDUAL VEHICLES

CALIFORNIA

	VEH	YEAR	MAKE	MODL	CID	VEH	YEAR	MAKE	MODL	CID
	6035	1976	FORD	GRAN	302	6036	1976	FORD	ELIT	351
MODE NO.	HC	CO	CO2	NOXC	FUEL ECONOMY	HC	CO	CO2	NOXC	FUEL ECONOMY
1	1.53	23.85	1510.7	2.19	5.71	.97	29.72	1403.4	3.00	6.11
2	.24	1.39	674.9	.39	13.09	.15	1.84	521.9	.29	16.90
3	1.61	8.02	1814.0	1.35	4.85	.70	2.66	1401.0	2.00	6.31
4	.80	2.53	906.1	1.10	9.73	.55	2.16	885.3	2.43	9.97
5	.74	2.86	826.4	1.32	10.65	.42	2.33	833.6	2.15	10.58
6	.60	1.09	389.4	.54	22.58	.70	.30	385.3	.40	22.87
7	1.08	33.16	964.2	3.74	8.70	1.00	97.00	1014.1	2.64	7.59
8	.24	1.42	422.5	.86	20.86	.70	.15	442.7	.83	19.94
9	.49	6.28	794.1	1.65	11.02	.24	7.65	885.6	2.77	9.88
10	.18	1.08	410.7	.54	21.49	.42	.19	402.6	.52	21.96
11	.64	16.05	1038.5	3.01	8.33	.58	62.60	1047.8	2.65	7.73
12	.17	2.62	504.5	.75	17.43	.60	.37	472.5	.76	18.68
13	.53	13.79	1071.6	2.40	8.11	.46	47.58	1040.5	2.35	7.95
14	.13	1.48	432.1	.58	20.41	.40	.48	444.0	.75	19.90
15	.15	1.00	473.7	.28	18.66	.08	.42	465.5	.29	19.03
16	.20	.01	963.7	1.45	9.20	.24	0.00	838.3	.37	10.58
17	.71	10.43	1055.3	1.63	8.26	.47	25.41	1067.9	1.95	8.00
18	.18	1.46	493.9	.48	17.86	.32	.37	471.0	.61	18.78
19	.66	8.72	806.9	1.51	10.79	.42	22.43	906.8	1.56	9.41
20	.30	1.71	588.2	.65	15.00	.33	1.07	578.0	.54	15.28
21	.98	46.55	1128.7	3.30	7.37	.84	103.72	1111.5	2.47	6.95
22	.18	1.60	495.5	.61	17.80	.44	1.26	511.0	.82	17.25
23	.56	5.14	1356.8	1.54	6.49	.38	2.41	1053.2	2.04	8.39
24	.45	11.46	754.1	1.35	11.47	.23	5.65	722.9	1.73	12.12
25	.20	.66	559.6	.88	15.81	.45	.71	594.5	1.35	14.86
26	.23	.93	698.1	.59	12.67	.16	.90	816.5	1.01	10.84
27	.47	9.13	903.4	1.71	9.65	.31	18.80	889.0	1.93	9.65
28	.20	1.34	539.8	.72	16.36	.35	.73	575.1	1.04	15.37
29	.51	3.02	1031.7	1.17	8.55	.31	1.36	837.9	1.56	10.55
30	.56	16.34	799.7	1.62	10.73	.43	37.09	766.4	1.22	10.74
31	.23	1.11	587.2	.81	15.05	.25	1.55	673.4	1.63	13.12
32	.24	2.03	795.0	.57	11.11	.24	1.21	813.4	.58	10.88
BAG (CALC.)	.37	6.99	720.7	1.29	12.11	.34	13.45	718.5	1.54	11.98
BAG (ACT.)	.40	6.66	715.0	1.29	12.21	.37	13.34	712.8	1.51	12.08
33	.05	.00	131.5	.19	67.39	.31	4.41	106.0	.06	77.91
34	.50	.02	1544.0	1.87	5.74	3.35	39.87	1311.5	.55	6.41
35	.28	.06	781.2	.84	11.35	1.89	24.38	646.0	.28	12.86
36	.19	.01	533.7	.63	16.61	1.34	25.75	532.4	.31	15.38
37	.31	.09	500.6	.54	17.69	.17	.22	504.5	.34	17.56
38	.22	.33	550.4	.73	16.09	.21	.50	493.3	.84	17.94
39	.14	.89	571.3	1.38	15.49	.09	.57	595.2	1.83	14.88

EMISSION RESULTS IN GRAMS PER MILE (PER MINUTE FOR IDLE)
FUEL ECONOMY IN MILES PER GALLON (PER MINUTE FOR IDLE)

APPENDIX H

LISTING OF MODAL RESULTS ON INDIVIDUAL VEHICLES

CALIFORNIA

	VEH	YEAR	MAKE	MODL	CID	VEH	YEAR	MAKE	MODL	CID
	6037	1976	MERC	MONG	351	6038	1976	MERC	BOBC	140
MODE NO.	HC	CO	CO2	NOXC	FUEL ECONOMY	HC	CO	CO2	NOXC	FUEL ECONOMY
1	.83	25.66	1758.6	3.34	4.93	1.23	3.88	659.5	4.67	13.26
2	.09	.64	502.8	.67	17.61	.14	.47	455.7	.92	19.43
3	.83	22.13	1781.5	2.88	4.88	.40	.92	798.5	1.80	11.08
4	.45	3.15	1009.1	2.74	8.74	.56	1.37	435.0	2.91	20.22
5	.37	5.95	880.4	2.91	9.96	.47	1.45	361.1	3.73	24.33
6	.11	.24	359.9	.78	24.61	.12	.27	231.8	.74	38.16
7	.83	90.70	1131.0	5.62	6.95	.26	2.87	432.0	4.61	20.29
8	.16	.47	463.1	.99	19.11	.13	.35	260.5	1.13	33.95
9	.25	20.43	969.8	2.19	8.85	.35	.95	344.5	5.45	25.57
10	.08	.49	410.3	.76	21.58	.10	.32	225.2	.88	39.27
11	.40	43.34	1259.2	3.40	6.68	.61	7.71	533.5	4.89	16.21
12	.10	1.21	415.8	.85	21.23	.12	.32	277.3	1.07	31.91
13	.35	38.10	1252.1	2.87	6.76	.51	6.78	576.2	4.36	15.08
14	.05	1.20	439.2	.91	20.11	.13	.31	252.2	1.14	35.07
15	.09	1.51	542.9	.72	16.27	.10	.18	271.4	.59	32.63
16	.20	4.71	1196.5	1.19	7.37	.16	.69	662.7	.58	13.36
17	.32	11.63	1278.1	3.19	6.84	.71	7.14	547.4	3.50	15.82
18	.05	1.17	434.2	.62	20.35	.10	.29	233.6	.69	37.87
19	.38	12.40	1033.2	2.67	8.42	.40	2.04	451.1	3.74	19.48
20	.06	1.25	557.9	.68	15.85	.15	.29	284.7	.99	31.07
21	.50	56.84	1335.7	4.54	6.22	.86	5.99	554.6	4.84	15.66
22	.07	1.40	500.5	1.07	17.65	.13	.40	304.6	1.15	29.03
23	.36	5.48	1463.8	2.99	6.02	.72	4.57	684.0	4.10	12.80
24	.22	12.37	842.0	2.31	10.29	.36	1.19	342.9	3.92	25.66
25	.07	.69	526.4	1.22	16.82	.18	.53	297.8	1.86	29.66
26	.15	.89	728.4	.93	12.15	.19	.41	463.6	1.13	19.09
27	.23	11.91	1037.3	2.86	8.40	.43	2.10	422.3	4.30	20.79
28	.08	.81	527.9	1.01	16.76	.14	.44	307.4	1.26	28.77
29	.32	2.91	1067.0	2.78	8.28	.47	.97	449.9	2.76	19.60
30	.27	16.52	836.2	2.33	10.28	.31	1.68	330.5	3.26	26.56
31	.09	.92	519.4	1.24	17.03	.17	.50	333.9	1.83	26.47
32	.11	1.99	670.4	.85	13.17	.15	.58	411.9	.94	21.47
BAG (CALC.)	.18	10.52	771.6	1.94	11.25	.28	1.80	375.9	2.63	23.38
BAG (ACT.)	.18	10.12	766.1	1.94	11.34	.30	1.71	367.5	2.60	23.92
33	.04	.00	132.1	.12	67.13	.02	.00	76.6	.03	115.84
34	.54	.14	1589.4	1.29	5.58	.24	.71	900.5	.36	9.84
35	.24	.01	773.9	.56	11.46	.12	.30	664.6	.53	13.34
36	.12	0.00	646.3	.61	13.72	.06	.12	418.6	.29	21.18
37	.13	.07	509.5	.55	17.40	.16	.30	268.7	1.09	32.91
38	.16	.22	518.2	1.19	17.10	.20	.17	243.0	1.19	36.39
39	.05	.36	654.9	1.74	13.54	.25	.32	300.2	2.61	29.44

EMISSION RESULTS IN GRAMS PER MILE (PER MINUTE FOR IDLE)
FUEL ECONOMY IN MILES PER GALLON (PER MINUTE FOR IDLE)

APPENDIX H

LISTING OF MODAL RESULTS ON INDIVIDUAL VEHICLES

CALIFORNIA

	VEH	YEAR	MAKE	MODL	CID	VEH	YEAR	MAKE	MODL	CID
	6039	1976	OLDS	OMEG	250	6040	1976	OLDS	CUTL	350
MODE NO.	HC	CO	CO2	NOXC	FUEL ECONOMY	HC	CO	CO2	NOXC	FUEL ECONOMY
1	.30	.30	1127.1	7.24	7.86	1.40	28.80	1380.5	5.11	6.21
2	.27	.37	333.6	.12	26.49	.76	22.01	407.5	.38	19.97
3	.64	.11	1219.1	1.88	7.27	2.64	101.95	1265.8	2.97	6.19
4	.48	.18	808.7	3.47	10.95	.70	18.84	858.9	2.33	9.96
5	.23	.17	743.2	4.07	11.93	.21	.87	733.5	2.71	12.07
6	.55	.09	230.4	.20	38.21	.54	.53	249.5	.73	35.22
7	.51	8.62	886.8	7.90	9.84	.33	.95	901.6	10.45	9.82
8	.39	.09	342.3	.55	25.82	.36	.29	321.6	.99	27.46
9	.19	.26	722.9	5.12	12.26	.14	.21	674.6	4.69	13.14
10	.21	.19	303.2	.40	29.18	.58	3.78	292.4	.69	29.56
11	.30	.37	859.4	10.05	10.31	.28	5.50	925.4	8.09	9.49
12	.25	.20	242.4	.50	36.44	.64	4.16	338.3	.77	25.58
13	.25	.46	872.3	8.05	10.16	.29	6.36	906.0	7.09	9.68
14	.20	.18	329.8	.72	26.84	.51	1.03	343.4	.80	25.60
15	.16	.35	378.5	.12	23.39	.36	7.66	305.4	.50	27.86
16	.13	1.33	605.5	.61	14.60	2.00	67.32	765.4	0.00	10.11
17	.23	.32	864.4	6.67	10.25	.51	13.86	937.3	4.39	9.24
18	.24	.24	313.0	.30	28.26	.60	5.42	344.6	.66	25.00
19	.21	.38	807.9	7.02	10.97	.53	14.09	794.5	5.04	10.85
20	.28	.40	370.0	.35	23.89	.96	9.77	403.0	.62	21.06
21	.41	4.14	964.2	9.03	9.13	.54	9.73	1044.2	10.67	8.36
22	.23	.26	342.3	.78	25.84	.76	6.37	365.4	.95	23.49
23	.15	.57	911.1	3.83	9.73	1.11	37.72	1067.8	2.58	7.85
24	.18	.29	632.7	4.69	14.01	.13	.29	649.2	3.97	13.65
25	.21	.30	373.1	.94	23.72	.36	.58	405.6	1.21	21.77
26	.36	.66	684.0	.24	12.93	.27	3.39	593.7	.62	14.80
27	.17	.34	734.5	6.29	12.07	.38	8.80	788.7	5.10	11.04
28	.19	.29	375.6	.84	23.56	.75	7.27	406.5	1.01	21.12
29	.13	.43	664.8	2.23	13.33	1.09	36.92	856.0	2.23	9.67
30	.24	.30	666.3	6.06	13.30	.13	.77	695.2	5.01	12.74
31	.21	.21	392.2	1.05	22.57	.17	.31	480.9	1.38	18.42
32	.21	.42	460.0	.23	19.24	.60	17.75	437.1	.55	19.01
BAG (CALC.)	.22	.59	549.6	2.98	16.10	.46	8.05	595.4	2.92	14.56
BAG (ACT.)	.18	.59	549.6	2.98	16.10	.45	7.81	589.9	2.92	14.71
33	.02	0.00	88.2	.08	100.58	.04	.20	107.5	.03	82.26
34	.55	.14	1059.7	.54	8.36	.55	.13	1328.4	.35	6.67
35	.21	.01	548.1	.27	16.17	.37	.00	795.8	.46	11.14
36	.12	.01	404.0	.30	21.95	.20	.00	511.6	.36	17.33
37	.76	.01	410.5	.24	21.49	.15	0.00	416.6	.37	21.28
38	.22	.02	437.7	.47	20.24	.08	0.00	436.0	.87	20.34
39	.05	.03	513.4	2.01	17.28	.03	0.00	541.2	1.58	16.40

EMISSION RESULTS IN GRAMS PER MILE (PER MINUTE FOR IDLE)
FUEL ECONOMY IN MILES PER GALLON (PER MINUTE FOR IDLE)

APPENDIX H

LISTING OF MODAL RESULTS ON INDIVIDUAL VEHICLES

CALIFORNIA

	VEH	YEAR	MAKE	MODL	CID	VEH	YEAR	MAKE	MODL	CID
	6041	1976	OLDS	VIST	455	6042	1976	PLYM	VOLA	225
MODE NO.	HC	CO	CO2	NOXC	FUEL ECONOMY	HC	CO	CO2	NOXC	FUEL ECONOMY
1	.23	.23	1624.2	8.41	5.46	.64	2.84	1236.6	3.09	7.14
2	.07	.25	417.4	.46	21.23	.09	.18	295.9	.35	29.94
3	.21	.26	1746.3	2.73	5.08	1.05	1.50	1389.0	2.88	6.36
4	.15	.05	1035.0	2.39	8.57	.44	1.15	782.4	1.63	11.30
5	.14	.06	851.2	4.59	10.42	.24	1.27	699.2	2.05	12.64
6	.13	.06	252.1	.45	35.13	.24	.19	281.3	.28	31.43
7	.80	8.47	1075.5	12.44	8.13	.19	2.26	871.5	6.58	10.14
8	.12	.09	222.8	.66	39.74	.14	.23	321.8	.80	27.51
9	.11	.06	841.1	8.13	10.55	.05	.84	731.5	3.04	12.11
10	.08	.09	288.6	.47	30.71	.07	.25	274.1	.67	32.31
11	.19	.45	1097.7	12.99	8.08	.10	1.78	906.5	5.79	9.76
12	.12	.16	264.1	.56	33.53	.10	.23	332.9	.85	26.61
13	.14	.11	1051.8	11.89	8.43	.09	1.39	823.9	4.96	10.74
14	.07	.10	290.9	.45	30.47	.09	.25	359.4	.95	24.65
15	.04	.23	304.5	.29	29.10	.04	.43	381.8	.33	23.20
16	.12	.54	869.7	.61	10.19	.16	0.00	574.0	.74	15.45
17	.15	.10	1123.6	8.44	7.89	.23	1.47	908.4	2.91	9.74
18	.08	.13	324.2	.27	27.33	.15	.26	317.9	.52	27.84
19	.14	.10	1055.2	7.08	8.41	.21	1.48	746.0	3.09	11.85
20	.10	.17	373.0	.46	23.76	.12	.43	433.2	.51	20.44
21	.27	1.17	1134.0	15.35	7.81	.15	1.77	920.3	8.01	9.61
22	.10	.11	327.6	.56	27.05	.11	.33	354.5	.74	24.98
23	.15	.20	1350.1	5.47	6.57	.22	1.43	899.6	2.12	9.83
24	.13	.08	810.3	8.29	10.95	.09	.90	595.9	2.63	14.85
25	.10	.09	346.3	.62	25.59	.10	.25	384.1	1.24	23.06
26	.06	.22	517.7	.36	17.13	.02	.63	454.2	.72	19.50
27	.13	.08	933.2	8.12	9.51	.11	1.02	742.4	3.40	11.92
28	.10	.07	377.5	.53	23.48	.10	.23	384.7	1.05	23.03
29	.14	.13	1156.6	3.54	7.67	.20	.90	745.7	1.69	11.87
30	.23	1.32	860.9	10.85	10.28	.10	.95	645.3	3.74	13.71
31	.10	.04	369.1	.67	24.02	.09	.30	405.2	1.36	21.86
32	.06	.15	550.6	.23	16.11	.06	.32	505.3	.41	17.54
BAG (CALC.)	.12	.68	646.7	3.86	13.69	.10	.67	576.1	2.28	15.37
BAG (ACT.)	.12	1.14	652.4	3.78	13.56	.11	.44	573.3	2.28	15.45
33	.02	0.00	106.9	.09	82.97	.03	.03	87.4	.11	101.42
34	.55	.03	1339.1	.72	6.62	.36	.60	1106.0	1.15	8.01
35	.19	0.00	782.2	.36	11.34	.18	.36	552.4	.48	16.03
36	.12	.01	522.3	.30	16.98	.10	.12	424.8	.85	20.87
37	.09	.01	452.4	.33	19.60	.14	.02	353.1	.82	25.10
38	.05	0.00	484.3	.76	18.32	.20	.07	414.3	1.19	21.38
39	.02	0.00	582.4	1.69	15.24	.05	.07	474.4	.34	18.70

EMISSION RESULTS IN GRAMS PER MILE (PER MINUTE FOR IDLE)
FUEL ECONOMY IN MILES PER GALLON (PER MINUTE FOR IDLE)

APPENDIX H

LISTING OF MODAL RESULTS ON INDIVIDUAL VEHICLES

CALIFORNIA

	VEH	YEAR	MAKE	MODL	CID	VEH	YEAR	MAKE	MODL	CID
	6043	1976	PLYM	VOLA	318	6044	1976	PONT	FIRE	350
MODE NO.	HC	CO	CO2	NOXC	FUEL ECONOMY	HC	CO	CO2	NOXC	FUEL ECONOMY
1	1.95	89.81	1442.8	2.46	5.58	.39	.96	1340.2	3.65	6.61
2	.06	1.99	381.0	.56	23.09	.20	1.93	485.9	.72	18.13
3	.15	3.22	1546.8	4.00	5.72	.54	6.60	1478.6	1.33	5.95
4	.17	1.34	1041.2	2.41	8.50	.24	1.73	910.2	1.81	9.71
5	.83	47.56	762.8	2.09	10.56	.14	2.06	745.2	2.34	11.85
6	.05	.77	220.2	.54	40.06	.13	1.18	279.8	.66	31.47
7	3.44	203.36	885.3	1.92	7.30	.29	48.75	896.7	1.44	9.11
8	.09	.78	295.0	.38	29.93	.10	1.11	342.1	1.22	25.79
9	1.83	130.46	738.4	1.11	9.35	.14	1.16	767.2	3.76	11.53
10	.03	.87	284.8	.41	31.01	.16	1.14	277.4	1.03	31.73
11	2.97	208.46	919.1	1.30	7.07	.23	33.36	984.8	2.71	8.55
12	.07	1.29	291.2	.52	30.24	.16	1.39	292.4	.96	30.08
13	2.44	179.65	907.4	1.37	7.41	.16	10.07	1010.8	3.88	8.64
14	.05	.60	306.4	1.23	28.86	.10	1.04	271.3	1.31	32.48
15	0.00	1.28	349.8	.92	25.23	.09	2.06	366.0	.68	24.02
16	.12	4.57	745.0	1.67	11.79	.46	5.06	689.8	.71	12.69
17	.93	83.78	991.8	1.42	7.88	.16	2.05	1053.5	3.93	8.39
18	.02	.95	320.4	.50	27.57	.17	2.93	315.8	.86	27.65
19	1.13	71.72	816.6	1.76	9.51	.24	6.25	964.6	2.28	9.10
20	.03	1.30	380.0	.94	23.22	.19	2.68	354.5	.53	24.70
21	3.63	230.39	918.9	1.82	6.87	.23	36.26	1131.3	2.43	7.46
22	.07	.88	353.3	.99	25.01	.14	1.90	300.4	.90	29.21
23	.15	6.43	1061.6	2.78	8.28	.21	5.33	1166.1	2.46	7.55
24	1.11	72.40	628.6	1.66	11.90	.11	2.10	724.1	2.90	12.20
25	.06	.53	418.9	1.45	21.14	.13	1.24	362.9	1.47	24.30
26	.01	1.46	558.6	1.33	15.82	.21	3.92	648.2	1.39	13.55
27	1.59	121.01	754.4	1.02	9.35	.13	3.61	872.8	3.69	10.10
28	.04	.72	385.9	1.26	22.92	.20	2.01	350.4	1.29	25.06
29	.05	.82	820.7	2.20	10.80	.26	4.78	935.5	1.94	9.40
30	1.59	111.18	628.7	1.12	10.98	.14	15.47	813.9	1.46	10.58
31	.06	.81	604.1	.82	14.66	.10	1.86	361.6	2.05	24.33
32	0.00	1.74	499.8	1.07	17.66	.18	3.89	453.9	.57	19.27
BAG (CALC.)	.71	49.09	594.9	1.19	13.16	.16	5.89	597.2	2.11	14.62
BAG (ACT.)	.70	50.92	594.9	1.16	13.11	.16	4.64	605.6	2.11	14.47
33	.01	.01	98.9	.08	89.74	.02	.04	111.8	.03	79.28
34	.48	.12	1206.0	.73	7.35	.19	0.00	1382.8	.38	6.42
35	.24	.18	806.0	.45	11.00	.13	0.00	680.6	.19	13.03
36	.14	.16	555.6	.54	15.95	.20	0.00	535.6	.25	16.55
37	.16	.04	346.3	2.90	25.59	.14	0.00	396.7	.68	22.35
38	.09	.03	351.5	2.02	25.22	.10	0.00	431.5	1.17	20.55
39	.05	.04	484.9	2.75	18.30	.09	.01	493.5	3.27	17.97

EMISSION RESULTS IN GRAMS PER MILE (PER MINUTE FOR IDLE)
FUEL ECONOMY IN MILES PER GALLON (PER MINUTE FOR IDLE)

APPENDIX H

LISTING OF MODAL RESULTS ON INDIVIDUAL VEHICLES

CALIFORNIA

	VEH	YEAR	MAKE	MODL	CID	VEH	YEAR	MAKE	MODL	CID
	6045	1976	PONT	GRNP	400	6046	1976	DATS	B210	85
MODE NO.	HC	CO	CO2	NOXC	FUEL ECONOMY	HC	CO	CO2	NOXC	FUEL ECONOMY
1	.24	2.61	1508.1	5.21	5.87	.82	12.16	458.5	5.13	18.48
2	.14	2.50	443.1	.61	19.83	.07	.76	310.4	.81	28.47
3	.43	4.02	1521.0	2.45	5.81	.53	19.12	561.8	2.24	14.95
4	.20	1.15	1028.4	2.68	8.61	.22	2.54	371.0	2.38	23.62
5	.14	1.03	833.5	2.84	10.62	.23	2.05	334.7	3.49	26.21
6	.20	.91	259.7	.70	33.90	.03	.70	202.8	1.09	43.51
7	.74	87.31	1048.6	2.62	7.47	1.27	60.64	263.2	2.55	24.48
8	.16	.53	342.6	1.67	25.81	.08	.48	235.7	2.19	37.49
9	.10	1.08	820.7	3.49	10.79	.25	4.74	311.6	4.48	27.75
10	.14	1.00	313.1	1.00	28.17	.05	.48	200.2	1.67	44.12
11	.15	2.80	1082.3	4.71	8.16	1.42	54.98	355.6	4.11	19.88
12	.19	1.32	292.1	1.25	30.11	.07	.94	242.0	1.54	36.42
13	.11	1.83	1082.5	5.17	8.17	1.30	57.61	336.0	3.44	20.61
14	.11	.70	370.4	1.34	23.87	.06	.39	246.9	1.85	35.83
15	.08	1.12	390.7	.76	22.60	.03	.91	227.5	1.58	38.76
16	.23	2.34	854.1	.59	10.34	.08	0.00	616.4	1.36	14.39
17	.10	1.25	1116.2	4.16	7.93	.66	10.51	353.0	4.36	23.88
18	.13	1.42	344.9	.79	25.53	.06	.56	246.3	.99	35.88
19	.12	1.79	924.5	3.62	9.57	.30	3.37	338.6	3.70	25.74
20	.18	2.23	441.0	1.08	19.94	.07	.37	274.1	.98	32.28
21	.41	34.05	1203.2	3.67	7.06	1.89	83.09	271.3	2.25	21.76
22	.12	.90	379.0	1.12	23.31	.08	.85	255.6	1.88	34.51
23	.11	1.83	1101.4	5.21	8.03	.27	6.04	313.9	2.84	27.38
24	.07	.69	714.0	3.66	12.41	.36	6.27	268.9	3.46	31.71
25	.13	.50	430.0	1.72	20.58	.09	.65	264.8	2.62	33.35
26	.12	1.54	589.2	1.21	14.99	.06	1.02	335.5	2.60	26.31
27	.07	.75	887.3	3.88	9.99	.49	11.86	332.0	4.12	25.20
28	.12	.57	436.2	1.63	20.29	.05	1.15	269.4	2.31	32.71
29	.11	1.46	849.3	3.95	10.42	.20	4.42	281.4	2.29	30.71
30	.13	6.94	681.8	2.88	12.81	.64	29.40	268.3	2.62	28.04
31	.09	.41	485.2	2.25	18.26	.10	.82	310.7	3.33	28.42
32	.11	1.58	552.0	.62	16.00	.04	2.26	309.9	1.83	28.30
BAG (CALC.)	.15	4.50	651.7	2.54	13.46	.37	12.38	295.5	2.89	28.08
BAG (ACT.)	.14	4.12	643.4	2.48	13.65	.37	11.52	292.7	2.86	28.45
33	.05	.00	102.6	.08	86.42	.01	0.00	23.7	0.00	374.21
34	1.24	.01	1248.4	.73	7.09	.24	0.00	569.0	.37	15.58
35	.56	.13	640.6	.37	13.81	.09	0.00	492.4	.83	18.02
36	.32	0.00	489.2	.37	18.11	.06	0.00	328.4	.62	27.01
37	.14	.00	402.4	.53	22.03	.05	.04	246.2	1.49	36.02
38	.09	.00	444.9	1.12	19.93	.07	.07	227.0	1.36	39.05
39	.07	0.00	531.0	2.91	16.71	.09	.21	259.0	3.92	34.19

EMISSION RESULTS IN GRAMS PER MILE (PER MINUTE FOR IDLE)
FUEL ECONOMY IN MILES PER GALLON (PER MINUTE FOR IDLE)

APPENDIX H

LISTING OF MODAL RESULTS ON INDIVIDUAL VEHICLES

CALIFORNIA

	VEH	YEAR	MAKE	MODL	CID	VEH	YEAR	MAKE	MODL	CID
	6047	1976	DATS	610	119	6048	1976	TOYO	CORR	97
MODE NO.	HC	CO	CO2	NOXC	FUEL ECONOMY	HC	CO	CO2	NOXC	FUEL ECONOMY
1	.75	7.78	773.5	7.18	11.26	1.14	11.64	744.7	4.11	11.58
2	.31	2.11	258.8	.46	33.74	.04	1.47	406.2	.56	21.72
3	.96	13.34	829.4	1.91	10.40	.14	0.00	655.2	1.54	13.54
4	.38	.92	577.0	2.92	15.31	.58	4.49	554.4	2.05	15.76
5	.38	.60	490.3	4.41	18.02	.12	3.38	447.0	2.98	19.61
6	.29	1.02	246.5	.56	35.64	.04	0.00	272.0	.61	32.62
7	.54	2.53	630.3	9.71	13.96	1.11	28.90	443.7	2.23	18.02
8	.11	.28	244.0	1.38	36.25	.09	0.00	266.7	1.46	33.24
9	.25	1.68	510.3	6.22	17.28	.05	2.05	379.5	4.75	23.18
10	.09	1.27	250.6	.93	35.10	.03	1.96	221.1	1.22	39.56
11	.36	2.27	591.5	9.76	14.89	1.31	34.49	520.0	2.95	15.35
12	.08	1.90	255.0	1.25	34.36	.06	3.49	261.4	1.23	33.23
13	.34	2.87	603.6	9.59	14.57	.33	20.72	555.2	3.04	15.07
14	.07	.53	262.1	1.50	33.73	.02	1.12	252.9	1.33	34.85
15	.04	1.80	259.1	.79	33.86	.00	0.00	288.3	.52	30.78
16	.35	9.70	542.2	.49	15.89	0.00	16.67	773.4	0.00	11.10
17	.37	4.08	583.0	6.78	15.03	.62	8.07	575.1	3.61	15.05
18	.16	1.69	260.4	.52	33.67	.02	2.19	249.3	.62	35.11
19	.21	.70	546.0	4.53	16.20	.14	5.44	510.9	3.22	17.07
20	.14	3.64	315.0	.93	27.64	.00	4.29	312.2	.56	27.83
21	.50	4.52	623.0	13.15	14.05	1.92	60.57	468.0	2.06	15.59
22	.10	2.37	279.6	1.19	31.29	.07	2.18	250.0	1.48	34.99
23	.43	10.85	583.1	3.97	14.76	1.08	10.54	632.8	2.10	13.60
24	.23	1.26	430.0	4.96	20.51	.12	3.25	429.3	3.08	20.42
25	.09	.44	311.6	1.75	28.40	.05	2.66	262.8	1.81	33.23
26	.10	2.20	416.5	1.20	21.12	.08	0.00	335.5	.70	26.44
27	.26	3.28	488.7	6.20	17.94	.12	5.00	460.6	3.86	18.93
28	.08	1.95	346.0	1.48	25.41	.03	2.09	247.1	1.42	35.43
29	.34	10.29	492.1	2.98	17.42	.23	9.41	594.5	2.30	14.55
30	.25	1.16	431.3	5.93	20.45	.08	13.00	472.9	2.25	17.98
31	.09	.52	331.8	2.14	26.66	.05	2.22	260.2	2.25	33.63
32	.11	2.47	343.2	1.29	25.54	.04	6.83	315.6	.79	27.18
BAG (CALC.)	.22	2.71	409.4	3.79	21.42	.21	8.81	374.2	2.25	22.84
BAG (ACT.)	.22	2.62	401.0	3.74	21.87	.20	7.98	368.5	2.25	23.25
33	.17	3.67	48.4	.01	162.20	.02	0.00	51.8	.03	171.21
34	.48	.13	655.7	.37	13.50	.18	0.00	640.8	.37	13.84
35	.30	1.84	355.2	.09	24.72	.04	.30	772.4	.64	11.48
36	.24	.16	226.8	.32	38.97	.02	.08	446.4	.37	19.87
37	.18	.06	286.8	.76	30.87	.01	.10	370.4	.49	23.95
38	.23	.41	326.9	1.07	27.03	.02	.13	271.3	1.14	32.68
39	.13	.36	359.5	2.91	24.62	.02	.25	314.7	3.60	28.16

EMISSION RESULTS IN GRAMS PER MILE (PER MINUTE FOR IDLE)
FUEL ECONOMY IN MILES PER GALLON (PER MINUTE FOR IDLE)

APPENDIX H

LISTING OF MODAL RESULTS ON INDIVIDUAL VEHICLES

CALIFORNIA

	VEH	YEAR	MAKE	MODL	CID	VEH	YEAR	MAKE	MODL	CID
	6049	1976	TOYO	CORO	133	6050	1976	VOLK	SEDA	97
MODE NO.	HC	CO	CO2	NOXC	FUEL ECONOMY	HC	CO	CO2	NOXC	FUEL ECONOMY
1	.63	13.21	889.5	4.23	9.73	.54	15.49	631.0	3.63	13.51
2	.02	.54	396.8	.37	22.32	.07	4.19	297.0	.68	29.22
3	.28	2.45	1076.1	.69	8.21	1.11	42.90	640.5	2.52	12.48
4	.12	.57	581.5	1.46	15.23	.18	6.03	388.6	1.40	22.26
5	.14	.75	549.4	2.57	16.11	.05	.47	349.6	3.18	25.32
6	.03	.39	218.6	.70	40.47	.03	.87	176.8	1.20	49.79
7	2.38	11.19	575.6	2.83	14.77	.71	27.09	332.5	.81	23.52
8	.07	.27	312.0	1.55	28.39	.04	.85	206.8	1.35	42.61
9	.98	10.84	487.5	1.99	17.48	.08	.44	357.3	4.00	24.78
10	.05	.49	252.6	1.01	35.01	.07	3.13	187.3	.94	46.13
11	1.97	115.25	568.8	2.55	11.74	.40	14.17	410.9	2.26	20.43
12	.06	1.03	265.4	1.26	33.21	.09	4.39	196.1	1.07	43.66
13	1.57	83.97	578.6	2.88	12.40	.22	6.30	416.0	3.37	20.81
14	.06	.47	282.3	1.33	31.34	.05	2.27	203.3	1.38	42.87
15	.02	0.00	322.4	1.15	27.53	.36	7.43	238.0	.08	35.39
16	0.00	3.23	558.6	.34	15.75	.49	21.43	516.1	.12	16.10
17	.30	9.37	659.9	3.27	13.14	.21	5.16	451.0	3.40	19.30
18	.01	.46	280.6	.85	31.54	.04	2.57	217.7	.58	40.00
19	.38	19.96	408.3	3.14	20.13	.15	3.21	382.0	2.80	22.90
20	.00	.90	344.2	1.04	25.68	.07	3.52	226.9	.69	38.16
21	2.61	181.91	589.7	2.48	10.04	.86	43.29	418.1	1.24	18.15
22	.07	.97	337.6	1.34	26.15	.10	3.62	209.6	1.26	41.16
23	.18	3.79	646.4	2.41	13.59	.30	11.00	533.4	2.37	16.09
24	.67	49.51	475.6	2.03	15.98	.05	.87	308.3	3.10	28.64
25	.07	.95	378.0	1.65	23.37	.04	1.18	231.3	1.75	38.05
26	.08	3.11	390.3	.61	22.45	.55	10.10	292.3	.12	28.64
27	.64	26.31	547.5	2.29	15.02	.12	2.16	378.7	3.76	23.21
28	.07	.64	382.2	1.44	23.15	.07	2.90	237.2	1.32	36.68
29	.09	1.72	597.3	1.05	14.79	.25	8.25	432.3	1.72	19.90
30	.91	83.05	439.6	2.15	15.49	.31	12.88	325.0	1.45	25.64
31	.10	.76	433.7	2.07	20.39	.04	.62	250.4	1.84	35.29
32	.08	2.92	432.4	1.30	20.30	.36	9.56	279.3	.12	30.04
BAG (CALC.)	.47	24.67	438.2	1.73	18.55	.18	6.09	301.7	1.93	28.46
BAG (ACT.)	.46	26.15	426.9	1.70	18.91	.18	6.05	307.3	1.99	27.97
33	.03	0.00	56.9	.03	155.82	.16	4.05	54.5	.05	144.62
34	.24	.12	718.6	.37	12.33	1.06	29.13	766.2	.97	10.88
35	.12	.06	350.4	.18	25.30	.68	20.15	560.0	.29	14.95
36	.10	.08	328.2	.24	27.01	.45	11.24	330.2	.26	25.41
37	.09	.08	290.0	.55	30.56	.04	.06	236.6	.99	37.48
38	.06	.15	325.0	1.59	27.27	.02	0.00	236.6	.93	37.50
39	.12	.16	391.8	7.83	22.62	.03	.01	274.2	2.82	32.36

EMISSION RESULTS IN GRAMS PER MILE (PER MINUTE FOR IDLE)
FUEL ECONOMY IN MILES PER GALLON (PER MINUTE FOR IDLE)

APPENDIX H

LISTING OF MODAL RESULTS ON INDIVIDUAL VEHICLES

CALIFORNIA

	VEH	YEAR	MAKE	MODL	CID	VEH	YEAR	MAKE	MODL	CID
	6051	1976	VOLK	SCIR	97	5052	1975	AMC	PACE	258
MODE NO.	HC	CO	CO2	NOXC	FUEL ECONOMY	HC	CO	CO2	NOXC	FUEL ECONOMY
1	.48	9.87	701.6	3.15	12.35	.40	10.84	691.2	4.08	12.51
2	.09	2.28	214.1	.56	40.72	.02	1.95	433.5	.41	20.33
3	.60	25.22	944.6	3.20	9.00	.69	16.29	851.0	1.84	10.10
4	.07	.55	447.5	1.90	19.79	.35	19.47	553.3	2.17	15.17
5	.07	.26	398.7	2.65	22.23	.21	8.49	508.4	3.18	16.99
6	.04	.08	116.0	.69	76.33	.23	1.84	328.1	.34	26.75
7	.80	36.29	449.0	1.36	17.45	1.51	69.81	617.0	5.57	12.13
8	.02	.05	122.2	1.43	72.55	.20	1.39	391.9	.63	22.48
9	.04	.06	387.6	4.15	22.88	.11	4.76	525.2	3.01	16.65
10	.36	1.25	134.8	.83	64.36	.06	.88	322.9	.46	27.35
11	.07	2.17	473.3	3.30	18.61	.77	54.47	683.2	4.61	11.51
12	.31	1.86	119.4	1.27	71.96	.21	2.44	341.3	.41	25.66
13	.15	3.64	478.4	4.15	18.31	.59	49.61	680.1	3.98	11.68
14	.15	.98	162.3	1.43	54.03	.08	.78	370.5	.67	23.86
15	.08	1.93	158.2	.32	54.98	.21	2.39	547.1	.72	16.09
16	0.00	5.65	470.5	.12	18.51	.04	4.38	542.6	.88	16.15
17	.15	4.75	482.6	3.75	18.09	.18	9.21	661.9	3.92	13.11
18	.03	1.29	125.9	.83	69.30	.14	3.87	362.6	.81	24.05
19	.06	.67	479.1	3.11	18.48	.25	5.46	549.7	3.31	15.88
20	.10	1.97	140.7	.87	61.60	.36	3.05	398.9	.72	21.92
21	.42	18.80	503.5	3.12	16.61	1.22	77.29	656.0	4.85	11.36
22	.38	2.39	171.9	1.35	50.19	.23	2.21	418.5	.61	21.00
23	.51	12.02	583.8	2.69	14.69	.16	4.30	599.6	3.22	14.63
24	.05	.70	403.4	2.54	21.93	.27	15.66	470.0	2.70	17.91
25	.04	.64	145.1	1.46	60.71	.07	1.59	552.3	.64	15.99
26	.32	1.57	305.5	.12	28.73	.02	4.34	540.2	.80	16.22
27	.12	2.67	432.4	3.68	20.31	.22	12.75	575.8	3.46	14.88
28	.38	3.00	155.3	1.35	55.06	.05	2.50	471.0	.61	18.68
29	.49	11.16	545.7	2.10	15.72	.19	16.74	519.1	2.27	16.25
30	.04	.71	408.6	1.74	21.65	.24	19.69	457.2	2.75	18.15
31	.03	.74	147.0	1.96	59.86	.05	3.06	555.6	.86	15.83
32	.11	4.06	137.6	.29	61.49	.06	4.45	503.8	.96	17.37
BAG (CALC.)	.20	3.75	297.6	2.09	29.18	.23	13.46	508.1	1.91	16.75
BAG (ACT.)	.22	3.59	292.0	2.12	29.75	.25	13.99	510.9	1.94	16.63
33	.18	3.92	56.1	.03	141.13	.04	0.00	58.3	.05	151.87
34	2.43	40.12	638.2	.36	12.52	.42	0.00	738.3	.40	12.00
35	.28	.18	597.1	.71	14.84	.36	.12	463.0	.40	19.11
36	.17	.00	360.4	.48	24.59	.26	.32	378.0	.39	23.40
37	.10	.00	258.5	1.14	34.30	.06	.02	342.9	1.18	25.87
38	.05	0.00	224.5	1.50	39.50	.04	.03	409.0	1.00	21.69
39	.05	.01	253.0	2.67	35.05	.01	.03	512.2	1.37	17.32

EMISSION RESULTS IN GRAMS PER MILE (PER MINUTE FOR IDLE)
FUEL ECONOMY IN MILES PER GALLON (PER MINUTE FOR IDLE)

APPENDIX H

LISTING OF MODAL RESULTS ON INDIVIDUAL VEHICLES

CALIFORNIA

	VEH	YEAR	MAKE	MODL	CID	VEH	YEAR	MAKE	MODL	CID
	5053	1975	BUIC	REGA	350	5054	1975	BUIC	REGA	350
MODE NO.	HC	CO	CO2	NOXC	FUEL ECONOMY	HC	CO	CO2	NOXC	FUEL ECONOMY
1	.75	10.21	1358.9	6.53	6.44	.94	14.12	1567.4	4.77	5.57
2	.18	.76	460.4	.58	19.20	.77	15.82	433.2	.17	19.27
3	1.36	60.02	1477.6	2.77	5.63	2.36	54.85	1596.7	2.57	5.25
4	.55	4.06	944.6	3.66	9.32	.45	11.05	1017.0	2.02	8.57
5	.31	2.11	754.8	4.41	11.69	.15	1.09	892.8	3.19	9.92
6	.53	1.72	289.0	.51	30.25	.44	1.71	324.7	.53	27.00
7	3.10	173.38	832.8	4.34	7.96	2.22	162.65	871.9	3.09	7.82
8	.89	1.67	347.9	1.83	25.12	.27	1.00	348.8	1.37	25.27
9	.58	17.17	723.3	5.11	11.80	.15	4.79	707.0	3.82	12.41
10	.46	1.19	309.6	1.07	28.36	.32	1.91	329.2	.77	26.64
11	1.01	40.05	960.4	7.55	8.65	.75	38.78	1078.7	5.82	7.77
12	.65	1.48	361.4	1.45	24.26	.59	5.68	365.2	1.55	23.61
13	.52	16.07	907.7	7.10	9.50	.33	11.71	1093.4	5.56	7.98
14	.31	1.04	372.1	1.45	23.69	.52	8.60	336.5	1.10	25.24
15	.08	1.25	364.2	.79	24.22	.20	2.22	426.6	.33	20.61
16	.73	6.33	974.0	.50	9.00	2.69	80.48	623.0	.62	11.71
17	.56	21.93	918.6	6.63	9.30	.53	15.76	1171.6	4.64	7.41
18	.13	1.46	411.5	.65	21.43	.49	4.71	357.9	.87	24.19
19	.54	7.62	728.7	4.61	11.96	.48	12.19	1088.0	3.33	8.01
20	.20	1.39	418.1	.70	21.09	.49	9.90	423.0	.55	20.17
21	2.06	100.41	942.8	6.35	8.02	1.11	62.41	1230.6	5.20	6.66
22	.44	1.21	405.7	1.70	21.70	.50	6.40	378.7	1.20	22.74
23	.46	7.13	969.7	3.64	9.03	1.06	30.23	1251.5	2.68	6.82
24	.57	20.31	581.7	4.16	14.42	.22	7.47	808.3	2.94	10.81
25	.51	1.25	451.3	2.31	19.51	.25	2.53	341.9	1.50	25.61
26	.06	2.18	587.0	1.32	15.03	.58	28.62	434.1	.79	18.46
27	.34	6.29	785.9	5.83	11.14	.40	16.13	1005.5	3.98	8.60
28	.31	1.51	444.8	1.84	19.80	.51	6.44	375.9	1.40	22.90
29	.43	6.13	716.6	2.38	12.20	1.16	38.02	1045.6	1.64	8.00
30	1.21	47.66	580.9	4.35	13.45	.53	19.83	838.0	2.48	10.19
31	.44	1.38	489.8	2.49	17.99	.18	5.94	385.1	2.20	22.47
32	.17	3.23	572.3	1.00	15.36	.92	23.72	486.9	.77	16.84
BAG (CALC.)	.50	14.77	606.6	3.36	14.06	.53	18.05	664.9	2.55	12.77
BAG (ACT.)	.52	14.03	634.9	3.33	13.48	.54	17.47	659.2	2.40	12.89
33	.17	.23	118.9	.11	74.09	.04	.00	112.3	.10	78.94
34	2.22	4.58	1445.8	1.18	6.08	.85	.99	1333.2	.99	6.64
35	.25	.84	855.1	.59	10.35	.13	.01	854.7	.57	10.38
36	.20	.48	519.8	.39	17.03	.09	.01	628.2	.57	14.12
37	.18	.56	367.1	.69	24.08	.71	.12	462.7	.45	19.08
38	.28	3.06	424.5	.91	20.63	.15	.16	460.6	1.19	19.24
39	.19	1.91	496.6	2.56	17.74	.07	.21	546.1	2.99	16.24

EMISSION RESULTS IN GRAMS PER MILE (PER MINUTE FOR IDLE)
FUEL ECONOMY IN MILES PER GALLON (PER MINUTE FOR IDLE)

APPENDIX H

LISTING OF MODAL RESULTS ON INDIVIDUAL VEHICLES

CALIFORNIA

	VEH	YEAR	MAKE	MODL	CID	VEH	YEAR	MAKE	MODL	CID
	5055	1975	CADI	DEVI	500	5056	1975	CHEV	MONZ	140
MODE NO.	HC	CO	CO2	NOXC	FUEL ECONOMY	HC	CO	CO2	NOXC	FUEL ECONOMY
1	.46	16.56	1884.3	4.66	4.64	4.83	20.34	680.3	5.15	12.20
2	.22	2.68	569.5	.69	15.45	.61	2.99	365.6	1.01	23.84
3	.25	2.57	1559.0	8.50	5.68	1.86	26.81	694.8	3.32	11.95
4	.29	1.60	1051.2	4.11	8.42	1.23	1.62	459.2	2.93	19.06
5	.14	3.24	988.4	2.63	8.93	1.32	4.12	430.7	3.54	20.11
6	.29	.85	370.7	.69	23.80	.39	1.16	253.9	.42	34.54
7	2.36	304.65	1111.7	3.66	5.55	.19	3.22	481.1	4.37	18.24
8	.33	.43	620.9	.74	14.26	.54	.70	286.0	1.17	30.74
9	.11	41.30	810.8	2.32	10.13	.03	1.39	381.9	3.59	23.10
10	.12	.63	423.5	.55	20.89	.24	1.25	222.8	.65	39.35
11	.84	131.47	1388.3	3.95	5.56	1.43	7.91	604.7	4.99	14.28
12	.10	.93	555.9	.72	15.92	.36	1.41	310.5	.50	28.28
13	.21	46.31	1465.6	3.90	5.77	1.54	8.72	621.4	4.36	13.87
14	.06	.46	485.4	.90	18.25	.29	.65	242.1	1.16	36.37
15	.03	.57	418.1	1.27	21.18	.04	0.00	287.5	.81	30.86
16	.21	0.00	1062.7	2.71	8.35	0.00	3.74	686.6	.96	12.82
17	.13	6.38	1476.2	3.26	5.97	2.69	13.96	645.1	3.39	13.14
18	.09	.34	522.3	.97	16.97	.06	.97	260.5	.54	33.85
19	.14	11.93	1116.7	3.55	7.81	1.95	6.71	515.5	3.47	16.68
20	.12	.70	555.5	1.15	15.93	.06	2.04	273.3	.49	32.08
21	3.37	340.44	1278.2	3.53	4.87	2.67	21.70	687.1	3.39	12.16
22	.13	1.11	563.5	.87	15.69	.26	1.18	240.9	1.03	36.44
23	.10	2.96	1153.3	4.76	7.66	3.57	19.99	779.4	3.13	10.80
24	.04	17.40	854.1	2.47	10.07	.36	2.96	442.5	3.70	19.80
25	.05	.48	573.1	1.27	15.46	.22	1.04	268.0	2.03	32.83
26	0.00	1.27	929.3	2.83	9.53	.13	0.00	352.0	2.17	25.18
27	.07	10.45	1311.8	2.83	6.68	1.22	6.95	528.3	3.14	16.34
28	.05	1.14	580.1	.93	15.25	.31	.32	263.0	1.44	33.56
29	.00	1.98	1193.6	3.80	7.42	3.45	12.71	629.8	2.76	13.43
30	.36	107.73	1025.9	2.74	7.42	.48	5.55	465.1	4.74	18.67
31	.09	1.18	639.2	1.36	13.84	.28	0.00	339.9	2.03	26.05
32	.03	2.51	722.5	2.06	12.22	.20	1.34	354.7	.86	24.83
BAG (CALC.)	.27	28.30	885.8	2.02	9.53	.64	3.91	406.7	2.44	21.40
BAG (ACT.)	.29	30.35	868.9	1.98	9.67	.65	3.89	403.9	2.44	21.54
33	.08	.01	109.0	.10	81.20	.04	.01	39.2	.03	225.65
34	1.57	1.33	1308.5	1.01	6.75	2.02	1.67	659.1	.77	13.28
35	1.26	1.62	653.0	.52	13.46	.30	.12	591.7	1.17	14.97
36	.25	.13	637.5	1.00	13.90	.28	.08	407.3	1.40	21.74
37	.14	.16	478.5	1.46	18.52	.18	.04	312.3	1.39	28.36
38	.08	.24	602.6	1.32	14.71	.14	.04	281.1	1.14	31.51
39	.02	.26	738.8	1.65	12.01	.15	.13	344.9	4.26	25.68

EMISSION RESULTS IN GRAMS PER MILE (PER MINUTE FOR IDLE)
FUEL ECONOMY IN MILES PER GALLON (PER MINUTE FOR IDLE)

APPENDIX H

LISTING OF MODAL RESULTS ON INDIVIDUAL VEHICLES

CALIFORNIA

	VEH	YEAR	MAKE	MODL	CID	VEH	YEAR	MAKE	MODL	CID
	5057	1975	CHEV	MALI	350	5058	1975	CHEV	IMPA	350
MODE NO.	HC	CO	CO2	NOXC	FUEL ECONOMY	HC	CO	CO2	NOXC	FUEL ECONOMY
1	.42	1.13	1198.0	8.50	7.39	.08	.04	1488.1	9.14	5.96
2	.27	1.15	524.8	.55	16.83	.20	.00	580.6	.46	15.27
3	.47	3.64	1331.3	3.74	6.63	.15	0.00	1828.6	4.05	4.85
4	.24	0.00	685.0	4.93	12.94	.10	.01	1058.9	4.31	8.38
5	.16	.56	644.4	5.68	13.74	.04	.04	815.9	5.35	10.88
6	.26	0.00	351.2	.81	25.22	.21	.00	331.1	.51	26.76
7	.40	1.91	883.1	7.58	10.00	.26	1.40	1128.3	12.53	7.85
8	.19	.84	414.8	2.51	21.30	.10	.03	456.4	1.56	19.43
9	.15	.43	675.1	7.43	13.13	.03	.06	949.8	8.49	9.34
10	.33	.39	377.2	1.57	23.43	.15	.02	383.8	1.10	23.10
11	.37	6.51	922.9	8.63	9.50	.06	.10	1214.1	12.44	7.31
12	.42	2.23	422.8	1.48	20.76	.19	.02	439.0	1.28	20.19
13	.19	.73	883.4	9.48	10.03	.05	.09	1197.6	11.65	7.41
14	.25	.37	385.4	1.73	22.95	.11	.01	423.1	1.54	20.96
15	.12	1.39	377.8	.84	23.34	.02	0.00	523.5	.83	16.95
16	.73	5.98	785.6	.39	11.13	0.00	0.00	1231.4	0.00	7.21
17	.24	.24	895.5	8.11	9.90	.10	.05	1207.9	9.39	7.35
18	.19	.12	462.5	1.01	19.15	.14	.00	429.1	.74	20.66
19	.23	2.21	664.9	6.70	13.26	.04	.02	1103.9	7.93	8.04
20	.39	.10	491.2	.75	18.02	.18	.00	456.4	.86	19.42
21	.36	4.46	991.9	8.87	8.87	.12	.24	1273.7	14.14	6.96
22	.24	.18	452.8	1.66	19.56	.19	.02	449.5	1.54	19.72
23	.24	.11	882.8	5.96	10.04	.08	.01	1285.7	6.87	6.90
24	.13	.07	608.6	5.81	14.57	.04	.06	887.0	7.31	10.00
25	.18	.09	477.9	2.38	18.54	.11	.04	509.3	1.90	17.41
26	.36	.19	671.0	1.09	13.20	.06	.04	670.3	1.21	13.24
27	.21	.87	805.0	7.33	11.00	.05	.08	1026.8	9.15	8.64
28	.33	.15	458.3	1.93	19.31	.15	.04	499.4	1.65	17.75
29	.26	.21	849.4	5.32	10.43	.05	.04	1103.1	4.57	8.04
30	.17	.13	703.1	5.79	12.61	.05	.08	930.1	8.34	9.54
31	.22	.20	478.2	2.64	18.52	.06	.05	560.4	2.67	15.83
32	.35	.19	619.8	.81	14.29	.06	.00	676.5	1.18	13.12
BAG (CALC.)	.25	.95	624.6	4.44	14.16	.09	.07	764.5	4.94	11.60
BAG (ACT.)	.25	1.06	624.6	4.20	14.15	.10	.07	767.3	4.70	11.56
33	.02	.00	111.6	.05	79.48	.11	.00	97.4	.05	90.75
34	.73	.01	1341.7	.57	6.60	1.86	.48	1190.0	.58	7.42
35	.36	.00	1008.2	1.53	8.79	.46	.00	802.6	.49	11.04
36	.48	.20	559.7	.52	15.81	.86	.04	842.3	.38	10.50
37	.10	0.00	405.0	.79	21.90	.15	.02	592.0	1.15	14.98
38	.12	.00	446.4	1.80	19.87	.02	.03	581.0	1.41	15.27
39	.11	.03	518.1	4.41	17.12	.02	.03	648.2	2.98	13.69

EMISSION RESULTS IN GRAMS PER MILE (PER MINUTE FOR IDLE)
FUEL ECONOMY IN MILES PER GALLON (PER MINUTE FOR IDLE)

APPENDIX H

LISTING OF MODAL RESULTS ON INDIVIDUAL VEHICLES

CALIFORNIA

	VEH	YEAR	MAKE	MODL	CID	VEH	YEAR	MAKE	MODL	CID
	5059	1975	CHEV	IMPA	400	5060	1975	CHEV	NOVA	250
MODE NO.	HC	CO	CO2	NOXC	FUEL ECONOMY	HC	CO	CO2	NOXC	FUEL ECONOMY
1	.39	2.27	1373.8	3.54	6.44	.37	.10	1328.5	3.41	6.67
2	.50	2.45	673.9	.52	13.06	.25	0.00	259.8	.11	34.06
3	.82	3.15	1180.2	1.27	7.47	.45	0.00	1269.3	.82	6.98
4	.50	1.21	876.5	1.24	10.09	.19	0.00	831.9	1.62	10.66
5	.22	.82	683.6	2.36	12.95	.23	0.00	659.5	2.05	13.44
6	.23	.87	462.7	.63	19.09	.46	0.00	225.1	0.00	39.17
7	.87	126.02	961.4	2.11	7.64	.49	.95	946.9	5.92	9.34
8	.12	.36	467.4	1.45	18.95	.36	0.00	190.1	.25	46.41
9	.11	.59	775.2	2.93	11.43	.24	.06	653.7	3.60	13.56
10	.13	.91	410.2	.92	21.54	.36	0.00	202.7	.12	43.55
11	.25	4.29	1121.2	4.16	7.86	.27	.17	836.4	5.47	10.60
12	.11	.86	523.2	1.13	16.91	.28	.00	183.7	.17	48.08
13	.19	6.54	1165.6	4.46	7.54	.28	.10	870.9	5.30	10.18
14	.09	.71	443.5	.96	19.95	.29	0.00	251.0	.48	35.23
15	.14	1.61	517.5	.45	17.05	.37	0.00	252.0	.44	35.06
16	.65	6.32	1142.7	.49	7.69	.39	.17	701.3	.12	12.63
17	.13	1.30	1089.7	4.25	8.13	.25	.06	902.2	3.63	9.83
18	.14	1.70	499.2	.67	17.67	.35	0.00	225.4	.21	39.18
19	.14	1.67	937.5	2.84	9.44	.28	.02	880.5	3.51	10.07
20	.17	1.78	595.0	.62	14.83	.36	0.00	228.6	.15	38.63
21	.63	85.06	1029.4	3.37	7.62	.45	1.46	1066.0	5.95	8.30
22	.08	.89	472.8	1.10	18.71	.32	.01	225.1	.33	39.25
23	.14	2.15	1085.1	2.00	8.15	.28	0.00	1016.0	2.69	8.73
24	.15	.89	780.0	3.22	11.35	.25	.03	677.6	3.04	13.08
25	.10	.85	461.8	1.56	19.15	.38	.01	235.1	.61	37.56
26	.28	2.00	779.1	.78	11.33	.28	.05	318.0	.70	27.82
27	.12	1.19	939.2	3.87	9.43	.25	.07	750.6	3.93	11.81
28	.12	1.58	458.9	1.18	19.22	.34	.01	277.9	.61	31.82
29	.14	2.95	988.1	1.83	8.94	.26	.09	759.4	2.16	11.67
30	.34	26.48	830.2	2.49	10.17	.30	.07	718.0	4.23	12.34
31	.07	1.17	463.9	1.64	19.05	.37	.02	274.5	.56	32.19
32	.15	2.71	651.1	.64	13.53	.42	0.00	321.6	.63	27.49
BAG (CALC.)	.19	7.95	705.7	2.17	12.35	.26	.08	506.6	1.90	17.49
BAG (ACT.)	.21	7.77	736.5	2.17	11.84	.26	.10	509.4	1.90	17.39
33	.12	0.00	127.1	.05	69.63	.01	.00	89.9	.03	98.64
34	2.38	0.00	1475.0	.39	5.99	.26	.01	1136.9	.36	7.80
35	.95	0.00	810.7	.28	10.91	.16	0.00	585.7	.18	15.14
36	1.01	0.00	759.6	.32	11.64	.28	0.00	491.1	.24	18.04
37	.42	0.00	541.6	.50	16.35	.19	0.00	317.0	.84	27.94
38	.06	0.00	522.1	.94	16.99	.16	0.00	383.7	.41	23.10
39	.02	0.00	579.7	2.58	15.31	.06	.01	450.0	1.59	19.71

EMISSION RESULTS IN GRAMS PER MILE (PER MINUTE FOR IDLE)
FUEL ECONOMY IN MILES PER GALLON (PER MINUTE FOR IDLE)

APPENDIX H

LISTING OF MODAL RESULTS ON INDIVIDUAL VEHICLES

CALIFORNIA

	VEH	YEAR	MAKE	MODL	CID	VEH	YEAR	MAKE	MODL	CID
	5061	1975	CHRY	CORD	360	5062	1975	DODG	DART	318
MODE NO.	HC	CO	CO2	NOXC	FUEL ECONOMY	HC	CO	CO2	NOXC	FUEL ECONOMY
1	.12	.71	1683.4	4.03	5.27	.48	.14	1316.7	1.70	6.73
2	.02	.40	517.9	.52	17.12	.06	.04	295.4	1.30	30.02
3	.08	1.98	1328.0	5.15	6.67	.27	.07	1222.2	1.60	7.26
4	.06	.37	1053.4	3.03	8.42	.31	.11	897.8	1.25	9.87
5	.04	.23	906.9	2.78	9.78	.30	.08	735.0	1.39	12.06
6	.03	0.00	394.7	.89	22.48	.06	.05	234.5	.90	37.81
7	.22	7.94	1055.1	4.15	8.31	.15	.65	936.9	1.89	9.46
8	.03	0.00	370.0	.70	23.98	.13	.08	315.8	.84	28.06
9	.02	.44	819.8	3.18	10.82	.12	.24	772.6	1.10	11.48
10	.01	.22	348.4	.67	25.45	.07	.06	275.9	.58	32.13
11	.05	.96	1141.0	3.73	7.77	.14	.57	898.4	2.12	9.86
12	.02	.34	488.3	.49	18.15	.10	.11	324.1	.75	27.34
13	.04	.63	1102.7	4.37	8.04	.09	.29	909.6	2.30	9.75
14	.01	.16	384.5	.68	23.07	.08	.09	331.0	.64	26.78
15	.02	0.00	603.7	.84	14.70	.07	.05	333.0	1.25	26.63
16	0.00	0.00	964.4	.75	9.20	.08	.00	680.4	.70	13.04
17	.03	.86	961.7	4.31	9.21	.21	.15	858.4	2.23	10.33
18	.01	.54	413.5	1.12	21.42	.06	.02	338.1	.72	26.23
19	.06	.38	936.5	4.16	9.47	.15	.12	753.8	1.77	11.76
20	.01	.34	524.1	1.14	16.92	.05	.05	364.7	.73	24.32
21	.11	15.52	1195.8	3.50	7.27	.12	.57	947.9	2.13	9.35
22	.03	.25	520.9	.69	17.02	.09	.11	378.5	.64	23.42
23	.13	.62	1077.0	3.73	8.23	.14	.10	913.8	1.53	9.71
24	.03	.27	783.9	3.18	11.32	.09	.11	603.1	1.64	14.71
25	.02	.18	484.7	.80	18.30	.13	.10	438.5	.82	20.21
26	0.00	0.00	786.7	1.09	11.28	.08	.04	552.2	1.98	16.06
27	.03	.34	901.8	3.96	9.84	.12	.17	741.0	2.04	11.97
28	.02	.27	495.9	.72	17.88	.09	.09	416.9	.77	21.27
29	.11	.45	942.6	3.56	9.41	.12	.04	775.9	1.38	11.43
30	.03	.45	791.9	3.14	11.20	.08	.20	642.1	1.42	13.81
31	.03	.25	511.3	1.04	17.34	.12	.13	450.3	.97	19.68
32	.06	.88	732.7	.77	12.09	.06	.04	402.4	1.98	22.04
BAG (CALC.)	.03	1.02	707.3	2.09	12.52	.11	.16	577.9	1.38	15.34
BAG (ACT.)	.03	1.13	696.0	2.06	12.72	.13	.16	594.5	1.38	14.91
33	.02	.01	117.7	.06	75.32	.04	0.00	85.9	.08	103.24
34	.32	.25	1451.2	.58	6.11	.72	.59	1032.8	.74	8.57
35	.16	.18	742.3	.29	11.94	.33	.18	599.7	.55	14.77
36	.07	.16	601.7	.32	14.74	.22	.08	475.1	.67	18.65
37	.03	.06	471.9	.94	18.80	.24	.04	339.6	4.55	26.07
38	.01	.02	468.1	1.94	18.96	.11	.04	362.2	1.95	24.47
39	.01	.04	623.7	1.47	14.23	.15	.10	476.2	1.16	18.61

EMISSION RESULTS IN GRAMS PER MILE (PER MINUTE FOR IDLE)
FUEL ECONOMY IN MILES PER GALLON (PER MINUTE FOR IDLE)

APPENDIX H

LISTING OF MODAL RESULTS ON INDIVIDUAL VEHICLES

CALIFORNIA

	VEH	YEAR	MAKE	MODL	CID	VEH	YEAR	MAKE	MODL	CID
	5063	1975	FORD	PINT	140	5064	1975	FORD	LTD	351
MODE NO.	HC	CO	CO2	NOXC	FUEL ECONOMY	HC	CO	CO2	NOXC	FUEL ECONOMY
1	.45	3.69	723.5	5.35	12.15	.39	7.00	1784.5	4.79	4.94
2	.02	.29	335.1	.23	26.45	.01	.48	557.1	.49	15.91
3	.34	.80	690.9	2.62	12.80	.05	1.70	2289.8	2.46	3.87
4	.24	.60	414.5	2.71	21.33	.23	2.74	1199.5	2.75	7.37
5	.25	.86	354.5	4.10	24.89	.11	1.72	1048.0	3.84	8.44
6	.03	.17	226.5	.30	39.12	.13	.49	427.3	.29	20.72
7	.30	5.33	409.3	5.58	21.20	1.78	146.12	1018.7	3.82	7.08
8	.03	.16	233.6	.48	37.94	2.13	7.07	434.9	.94	19.61
9	.25	.95	364.1	6.11	24.23	1.28	42.43	863.0	3.56	9.51
10	.04	.15	208.6	.49	42.48	2.03	19.10	379.4	.65	21.34
11	.35	3.62	521.1	5.45	16.81	3.12	161.59	991.3	4.33	7.07
12	.03	.18	246.4	.36	35.97	2.87	24.56	398.4	.77	19.90
13	.32	3.00	525.9	5.03	16.70	2.94	146.33	987.6	3.26	7.23
14	.05	.22	238.4	.63	37.15	1.88	8.92	414.3	1.12	20.44
15	.05	.23	253.5	.20	34.94	.21	21.54	653.8	.31	12.89
16	.04	0.00	656.8	.24	13.51	3.31	199.63	1039.3	.27	6.51
17	.29	1.84	539.5	3.95	16.34	2.11	72.70	1142.6	3.60	7.02
18	.03	.23	254.0	.33	34.89	1.19	19.63	584.3	.45	14.34
19	.27	1.92	393.5	4.40	22.34	2.34	90.59	891.0	2.96	8.53
20	.04	.24	291.3	.34	30.42	1.89	34.57	594.2	.41	13.56
21	.57	7.62	517.8	6.76	16.70	3.82	215.99	1090.0	3.95	6.16
22	.05	.30	276.8	.78	31.99	2.35	21.09	485.6	1.01	16.87
23	.34	1.19	465.7	3.37	18.94	1.82	68.53	1192.3	2.56	6.80
24	.17	.65	314.7	4.74	28.06	1.04	52.83	815.2	2.94	9.84
25	.07	.22	268.6	1.00	32.98	1.08	4.28	540.7	1.57	16.11
26	.06	.34	414.7	.77	21.37	.52	26.50	1022.8	.70	8.32
27	.22	1.15	396.4	4.46	22.25	1.77	67.82	924.7	3.28	8.56
28	.06	.23	299.1	.81	29.62	1.90	17.53	534.8	1.34	15.62
29	.22	.68	470.2	2.24	18.80	1.67	57.04	980.5	1.76	8.25
30	.18	1.37	280.5	4.38	31.33	1.78	131.91	784.6	1.76	8.90
31	.08	.23	318.9	1.00	27.78	.77	3.65	549.9	1.90	15.90
32	.09	.37	381.2	.58	23.23	.56	45.64	770.8	.80	10.51
BAG (CALC.)	.15	1.01	356.8	2.41	24.73	1.38	44.67	722.5	2.16	11.14
BAG (ACT.)	.15	.93	348.3	2.38	25.34	1.46	46.00	714.2	2.13	11.22
33	.01	0.00	71.1	.03	124.76	.05	.00	141.9	.06	62.50
34	.25	.36	817.0	.39	10.85	.84	0.00	1722.3	.76	5.15
35	.09	.06	577.1	.39	15.37	.45	0.00	868.8	.38	10.20
36	.06	0.00	366.3	.19	24.21	.24	0.00	622.5	.32	14.24
37	.10	.10	271.4	.40	32.64	.15	.16	712.0	.42	12.45
38	.10	.12	235.2	1.08	37.65	.10	.18	604.8	.69	14.66
39	.13	.13	274.6	2.40	32.25	.10	.17	587.2	2.66	15.10

EMISSION RESULTS IN GRAMS PER MILE (PER MINUTE FOR IDLE)
FUEL ECONOMY IN MILES PER GALLON (PER MINUTE FOR IDLE)

APPENDIX H

LISTING OF MODAL RESULTS ON INDIVIDUAL VEHICLES

CALIFORNIA

	VEH	YEAR	MAKE	MODL	CID	VEH	YEAR	MAKE	MODL	CID
	5065	1975	FORD	LTD	460	5066	1975	FORD	GRAN	250
MODE NO.	HC	CO	CO2	NOXC	FUEL ECONOMY	HC	CO	CO2	NOXC	FUEL ECONOMY
1	.78	124.51	1505.2	1.39	5.21	1.10	16.53	1219.9	10.65	7.10
2	.07	14.12	864.5	.21	10.01	.17	2.35	438.6	1.85	20.04
3	.64	41.47	1837.3	.49	4.66	.90	7.05	1459.3	4.41	6.02
4	.36	51.33	1114.3	.50	7.42	.51	4.12	654.4	6.78	13.40
5	.15	29.63	950.8	.57	8.90	.65	8.73	721.1	9.71	12.04
6	0.00	4.63	603.3	.19	14.54	.24	1.50	317.0	4.77	27.72
7	.19	36.18	988.2	2.91	8.49	1.92	107.63	726.1	6.59	9.85
8	.00	4.41	706.2	.35	12.45	.19	3.54	490.7	8.09	17.86
9	.07	21.21	928.0	1.57	9.23	1.12	96.27	745.1	7.32	9.86
10	.00	3.93	588.5	.22	14.93	.13	2.47	394.8	5.85	22.24
11	.44	64.38	1114.4	2.57	7.29	2.26	141.18	847.0	6.20	8.25
12	.00	4.37	673.1	.19	13.05	.22	2.37	440.8	5.72	19.94
13	.33	62.45	1180.1	1.94	6.94	1.85	121.02	828.6	6.31	8.66
14	0.00	3.74	656.2	.25	13.40	.16	2.58	462.0	6.66	19.02
15	.01	3.18	705.6	.15	12.49	.08	2.24	381.3	1.81	23.05
16	.03	.70	1556.6	0.00	5.70	.35	5.18	683.2	1.41	12.82
17	.43	75.32	1196.3	1.18	6.74	.51	13.41	880.9	9.52	9.82
18	0.00	8.32	744.5	.14	11.72	.20	1.02	406.3	5.28	21.73
19	.44	61.70	997.6	.91	8.10	.52	26.89	730.3	6.82	11.46
20	0.00	7.15	895.5	.22	9.79	.29	1.58	480.4	5.89	18.34
21	.34	61.60	1100.4	3.07	7.41	2.39	158.77	870.4	5.89	7.87
22	0.00	5.34	788.8	.26	11.13	.19	3.13	515.9	5.97	17.02
23	.54	62.01	1271.8	.56	6.47	.40	3.64	751.6	6.20	11.70
24	.16	36.83	885.0	1.01	9.41	.83	51.25	673.5	7.75	11.73
25	.01	10.99	804.6	.38	10.80	.19	3.92	482.4	8.38	18.14
26	.04	1.95	1114.2	.62	7.94	.12	0.00	487.2	3.49	18.20
27	.29	58.78	1003.3	1.20	8.09	.52	23.06	847.6	8.92	10.02
28	0.00	6.84	848.3	.29	10.33	.10	3.15	518.7	6.80	16.94
29	.46	36.41	979.3	.40	8.55	.31	4.21	825.3	6.97	10.66
30	.19	34.98	764.6	1.12	10.82	1.08	58.83	643.9	6.60	12.00
31	.01	12.98	909.8	.38	9.54	.25	4.18	515.3	8.81	16.98
32	.00	4.71	1120.0	.49	7.87	.21	7.09	527.2	3.40	16.47
BAG (CALC.)	.10	25.69	897.9	.86	9.46	.60	31.44	633.5	6.83	12.96
BAG (ACT.)	.11	25.88	895.2	.88	9.48	.60	30.95	633.5	6.47	12.98
33	.04	.01	150.2	.14	59.03	.10	.08	82.3	.11	107.29
34	.32	.02	1729.6	1.29	5.13	1.14	1.21	971.0	.95	9.09
35	.13	.00	891.7	.63	9.95	.51	.24	521.7	.46	16.95
36	.08	0.00	655.8	.52	13.53	.30	.48	450.0	.92	19.65
37	.03	.10	809.4	.38	10.96	.37	.48	386.7	3.98	22.84
38	.01	.24	763.2	.50	11.62	.27	.85	477.8	6.84	18.49
39	.01	2.29	826.7	.59	10.69	.08	2.54	642.8	9.57	13.72

EMISSION RESULTS IN GRAMS PER MILE (PER MINUTE FOR IDLE)
FUEL ECONOMY IN MILES PER GALLON (PER MINUTE FOR IDLE)

APPENDIX H

LISTING OF MODAL RESULTS ON INDIVIDUAL VEHICLES

CALIFORNIA

	VEH	YEAR	MAKE	MODL	CID	VEH	YEAR	MAKE	MODL	CID
	5067	1975	FORD	GRAN	302	5068	1975	MERC	MONT	400
MODE NO.	HC	CO	CO2	NOXC	FUEL ECONOMY	HC	CO	CO2	NOXC	FUEL ECONOMY
1	1.17	13.85	1407.4	3.31	6.19	9.45	158.03	1490.0	2.80	5.02
2	.15	1.72	417.9	.73	21.08	11.81	60.47	467.0	.29	14.81
3	.80	4.24	1675.7	2.68	5.27	25.95	320.33	1431.6	1.27	4.40
4	.71	4.97	1011.8	1.98	8.69	3.77	90.56	1003.7	1.45	7.66
5	.48	3.30	872.3	2.20	10.10	1.50	20.77	918.3	2.00	9.29
6	.71	1.65	403.4	.34	21.74	3.00	18.30	327.8	.28	24.25
7	.89	49.53	1025.8	3.69	8.02	3.80	178.09	1074.9	2.94	6.49
8	.91	1.64	415.1	.71	21.10	1.43	13.44	404.2	1.09	20.65
9	.41	4.39	845.8	2.45	10.39	1.33	39.38	974.1	2.47	8.53
10	.90	1.26	405.4	.62	21.63	4.99	18.82	389.8	.47	20.39
11	.53	13.62	1084.0	3.48	8.02	4.05	158.09	989.2	2.99	7.10
12	.98	1.63	392.5	.61	22.29	6.78	23.06	338.2	.51	22.42
13	.49	12.07	1068.4	3.20	8.15	4.69	136.01	1034.0	2.56	7.03
14	.68	1.43	443.9	.66	19.80	3.24	18.20	368.1	.61	21.81
15	.11	1.03	475.6	.89	18.59	2.62	44.56	324.0	.37	22.06
16	.27	1.69	798.2	.84	11.07	13.73	211.31	518.9	.49	9.92
17	.65	5.33	1020.4	3.27	8.61	5.48	103.78	1055.4	2.29	7.18
18	.39	.88	477.9	.45	18.47	5.40	37.80	362.3	.27	20.23
19	.48	4.85	918.0	2.53	9.57	3.15	88.67	1076.8	1.94	7.24
20	.27	1.43	514.4	.53	17.15	8.47	33.04	535.0	.31	14.46
21	.77	36.91	1162.8	3.47	7.26	6.10	218.61	1133.9	2.67	5.93
22	.86	1.52	480.9	.74	18.26	6.03	27.96	445.7	.73	17.45
23	.58	3.52	1091.0	2.22	8.08	8.90	154.80	1166.4	1.62	6.17
24	.31	3.83	713.4	2.27	12.32	2.08	77.80	826.8	1.74	9.29
25	.78	2.40	556.0	.85	15.79	1.69	21.86	452.4	1.11	18.03
26	.23	1.95	736.2	1.81	11.99	5.03	71.21	651.2	.54	11.39
27	.44	4.94	822.9	2.78	10.67	3.42	79.27	930.6	2.31	8.33
28	.87	1.89	522.5	.74	16.80	5.79	30.66	431.8	.70	17.81
29	.46	2.23	871.3	1.26	10.13	10.17	163.24	947.5	.65	7.18
30	.37	5.44	752.2	2.07	11.65	2.51	121.86	852.4	1.61	8.44
31	.61	1.90	585.6	1.08	15.03	1.77	23.40	446.4	1.00	18.16
32	.17	2.19	694.9	1.14	12.70	6.09	73.09	537.8	.93	13.21
BAG (CALC.)	.51	6.18	689.8	1.62	12.66	4.55	67.02	675.8	1.40	11.16
BAG (ACT.)	.51	6.41	692.6	1.56	12.60	4.70	68.18	681.4	1.37	11.05
33	.08	.08	105.8	.08	83.60	4.02	33.58	44.1	0.00	80.97
34	.85	.98	1267.6	.76	6.98	14.53	369.78	847.1	.37	6.02
35	.48	.37	642.9	.38	13.76	6.26	184.75	479.5	.19	11.24
36	.26	.37	592.7	.71	14.94	.44	1.23	606.0	.31	14.57
37	.11	1.12	566.3	.76	15.61	.89	19.59	556.3	.98	15.05
38	.16	1.85	560.6	.51	15.74	.69	11.94	614.3	.48	13.97
39	.14	2.09	498.4	.74	17.68	.84	14.41	593.6	1.42	14.34

EMISSION RESULTS IN GRAMS PER MILE (PER MINUTE FOR IDLE)
FUEL ECONOMY IN MILES PER GALLON (PER MINUTE FOR IDLE)

APPENDIX H

LISTING OF MODAL RESULTS ON INDIVIDUAL VEHICLES

CALIFORNIA

	VEH	YEAR	MAKE	MODL	CID	VEH	YEAR	MAKE	MODL	CID
	5069	1975	OLDS	CUTL	350	5070	1975	OLDS	DELT	455
MODE NO.	HC	CO	CO2	NOXC	FUEL ECONOMY	HC	CO	CO2	NOXC	FUEL ECONOMY
1	.19	1.56	1360.9	6.75	6.51	.47	14.70	1819.6	5.24	4.81
2	.04	.04	502.8	.27	17.65	.13	2.06	594.8	.45	14.83
3	.24	.53	1561.8	1.91	5.68	.39	14.45	2025.5	2.18	4.33
4	.10	0.00	873.4	2.45	10.16	.43	9.27	1297.4	2.92	6.76
5	.11	.27	697.6	3.94	12.71	.26	4.89	1020.4	3.18	8.63
6	.08	.08	344.1	.41	25.76	.26	.90	454.3	.96	19.44
7	1.82	76.03	814.7	8.19	9.44	4.00	325.31	977.4	4.43	5.91
8	.16	.14	406.1	.92	21.82	.25	.75	489.7	1.35	18.05
9	.12	.23	600.5	6.71	14.76	.19	32.04	994.1	4.11	8.49
10	.06	.43	398.6	.68	22.22	.12	.93	423.0	1.27	20.89
11	.19	4.53	936.9	9.64	9.40	.52	68.66	1257.4	5.84	6.49
12	.08	.60	428.8	.81	20.64	.13	1.16	491.4	1.41	17.98
13	.10	.63	965.1	8.92	9.18	.43	61.25	1300.0	5.65	6.35
14	.05	.45	373.8	.84	23.69	.08	.48	493.7	1.72	17.94
15	.00	.36	398.5	.31	22.24	.13	.89	738.0	.49	12.00
16	.01	1.31	834.9	.70	10.60	.36	0.00	1140.4	.73	7.78
17	.10	.46	955.3	6.77	9.28	.37	23.22	1437.0	3.48	6.02
18	.07	.84	390.9	.84	22.62	.10	.96	473.4	.81	18.68
19	.12	.84	816.6	5.15	10.85	.30	32.61	1211.4	2.97	7.02
20	.08	1.35	571.8	.96	15.46	.08	1.37	615.4	1.14	14.37
21	.28	5.87	1030.0	11.01	8.53	2.68	238.48	1242.0	6.61	5.46
22	.08	.90	483.9	1.05	18.28	.15	.70	568.8	1.66	15.56
23	.08	2.20	1080.8	3.76	8.18	.31	11.25	1553.5	3.18	5.65
24	.09	.65	715.7	4.66	12.38	.25	53.00	952.3	2.72	8.56
25	.08	.52	440.6	1.46	20.10	.12	.82	553.7	2.04	15.98
26	.06	1.46	553.9	.51	15.95	.20	1.06	791.7	1.00	11.18
27	.09	.74	838.0	6.06	10.57	.27	38.72	1146.4	3.13	7.35
28	.08	.28	444.9	1.18	19.92	.14	.88	552.0	1.49	16.03
29	.09	.68	871.6	2.47	10.17	.37	17.50	1332.3	1.70	6.52
30	.15	1.27	663.7	5.64	13.32	.55	98.93	933.2	3.63	8.14
31	.09	.23	513.1	1.35	17.28	.11	.49	611.7	1.93	14.48
32	.04	1.78	632.0	.72	13.98	.19	3.22	760.4	.46	11.59
BAG (CALC.)	.12	2.86	650.6	3.40	13.54	.38	28.30	839.0	2.46	10.03
BAG (ACT.)	.12	2.59	650.6	3.29	13.55	.34	26.87	813.5	2.30	10.36
33	.02	0.00	110.0	.09	80.65	.07	0.00	113.8	.03	77.83
34	.49	0.00	1338.3	.73	6.62	1.03	0.00	1387.3	.37	6.38
35	.45	0.00	801.0	.36	11.06	.31	0.00	815.6	.27	10.87
36	.22	0.00	540.2	.24	16.41	.30	0.00	663.9	.37	13.35
37	.28	0.00	448.8	.33	19.74	.18	0.00	546.0	.59	16.24
38	.07	0.00	580.4	1.21	15.29	.09	.01	570.5	1.85	15.55
39	.02	0.00	569.2	1.66	15.59	.10	.10	681.5	3.75	13.02

EMISSION RESULTS IN GRAMS PER MILE (PER MINUTE FOR IDLE)
FUEL ECONOMY IN MILES PER GALLON (PER MINUTE FOR IDLE)

APPENDIX H

LISTING OF MODAL RESULTS ON INDIVIDUAL VEHICLES

CALIFORNIA

	VEH	YEAR	MAKE	MODL	CID	VEH	YEAR	MAKE	MODL	CID
	5071	1975	PLYM	DUST	225	5072	1975	PLYM	STAW	360
MODE NO.	HC	CO	CO2	NOXC	FUEL ECONOMY	HC	CO	CO2	NOXC	FUEL ECONOMY
1	.23	.26	891.2	12.16	9.95	.22	1.99	1503.0	4.14	5.89
2	.06	0.00	271.1	1.10	32.72	.01	.62	473.3	.62	18.71
3	.27	.55	915.9	3.96	9.67	.03	2.62	1796.5	2.67	4.93
4	.09	0.00	595.6	6.29	14.89	.08	.52	1029.9	2.68	8.61
5	.14	.09	514.8	11.17	17.22	.12	.48	790.5	3.31	11.21
6	.08	0.00	245.0	3.36	36.19	.04	.53	276.6	.66	31.98
7	.13	.07	649.3	13.72	13.66	2.76	229.20	961.2	2.37	6.67
8	.07	.03	288.9	4.91	30.69	.10	.42	361.3	.47	24.50
9	.09	.09	537.5	12.57	16.50	.96	133.32	780.4	1.74	8.94
10	.06	.02	279.6	5.84	31.72	.04	.38	302.2	.47	29.30
11	.09	.21	665.5	12.92	13.33	1.82	204.36	933.7	1.94	7.04
12	.07	.08	261.6	4.56	33.88	.09	.75	322.2	.36	27.42
13	.09	.11	631.3	11.85	14.05	1.23	154.28	1004.0	1.64	7.10
14	.06	.03	297.3	7.62	29.83	.04	.06	312.7	.70	28.36
15	.03	.11	337.4	.87	26.29	.02	.30	361.0	.56	24.55
16	.09	.10	604.8	1.77	14.67	.02	0.00	1122.2	.45	7.91
17	.12	.08	631.1	10.34	14.05	.17	12.31	1129.1	2.27	7.72
18	.06	.01	312.6	3.34	28.37	.02	.24	311.9	.63	28.42
19	.10	.13	548.3	7.72	16.17	.16	14.76	1002.0	2.20	8.65
20	.09	.03	312.4	4.09	28.38	.04	.01	418.2	.52	21.21
21	.13	.13	694.5	14.76	12.77	2.06	219.80	1058.3	2.30	6.29
22	.07	.06	314.1	6.10	28.23	.06	.26	349.5	.59	25.35
23	.09	.15	638.6	5.97	13.89	.09	.48	1338.1	3.36	6.63
24	.09	.04	452.6	11.13	19.60	.62	64.00	747.6	1.87	10.44
25	.08	.06	414.4	9.94	21.40	.07	.32	407.6	.87	21.74
26	.03	.01	465.3	1.78	19.07	.01	.69	523.1	1.02	16.93
27	.09	.08	518.0	9.82	17.12	.22	39.31	912.8	1.63	9.10
28	.07	.08	358.5	8.95	24.73	.05	.47	404.9	.79	21.87
29	.11	.39	557.8	4.72	15.88	.07	.77	1049.5	2.43	8.45
30	.10	.09	469.0	9.92	18.91	1.26	119.49	681.7	2.03	10.16
31	.08	.08	407.8	10.68	21.74	.10	.24	376.8	.79	23.51
32	.06	.02	499.6	1.74	17.76	.01	.71	492.8	.58	17.97
BAG (CALC.)	.07	.07	456.1	8.27	19.45	.35	35.11	643.5	1.34	12.68
BAG (ACT.)	.07	.07	456.1	7.77	19.45	.34	38.56	646.4	1.36	12.54
33	.02	.06	72.5	.05	122.19	.02	.02	119.8	.07	74.03
34	.25	.72	869.7	.54	10.18	.33	.74	1473.6	.89	6.01
35	.09	.06	557.1	.81	15.92	.07	.24	838.3	.62	10.58
36	.08	.08	408.8	.84	21.69	.07	.16	546.5	.47	16.23
37	.07	.02	335.4	3.01	26.44	.08	.14	380.0	2.39	23.33
38	.06	.03	371.0	6.53	23.91	.05	.03	423.4	2.79	20.95
39	.05	.07	473.5	14.53	18.73	.04	.07	519.0	3.38	17.09

EMISSION RESULTS IN GRAMS PER MILE (PER MINUTE FOR IDLE)
FUEL ECONOMY IN MILES PER GALLON (PER MINUTE FOR IDLE)

APPENDIX H

LISTING OF MODAL RESULTS ON INDIVIDUAL VEHICLES

CALIFORNIA

	VEH	YEAR	MAKE	MODL	CID	VEH	YEAR	MAKE	MODL	CID
	5073	1975	PONT	CATA	400	5074	1975	PONT	LEMA	350
MODE NO.	HC	CO	CO2	NOXC	FUEL ECONOMY	HC	CO	CO2	NOXC	FUEL ECONOMY
1	.16	0.00	1741.1	4.37	5.10	.60	.05	1400.2	14.48	6.33
2	.09	0.00	384.1	.48	23.09	.22	.00	447.9	1.37	19.78
3	.34	0.00	1728.0	3.47	5.13	1.02	0.00	1558.0	9.12	5.68
4	.14	0.00	1162.9	2.10	7.63	.42	.01	857.4	9.39	10.34
5	.08	0.00	942.4	2.45	9.42	.30	.01	666.5	7.63	13.30
6	.16	0.00	294.6	.40	30.08	.40	.00	262.5	1.99	33.64
7	.15	.03	1124.2	8.77	7.89	.40	.74	985.9	13.78	8.98
8	.15	0.00	424.3	.89	20.90	.34	.03	304.6	3.90	29.04
9	.04	0.00	901.4	4.78	9.85	.19	.06	730.0	11.30	12.15
10	.08	0.00	382.2	.58	23.21	.28	.02	288.7	3.25	30.64
11	.05	.27	1272.7	6.65	6.97	.25	.12	962.7	14.49	9.21
12	.06	0.00	370.2	.66	23.96	.31	.02	314.6	3.41	28.12
13	.04	0.00	1298.3	5.97	6.84	.22	.09	968.8	13.34	9.15
14	.04	0.00	466.1	.86	19.04	.26	.03	324.6	4.99	27.27
15	.04	0.00	431.0	.97	20.59	.14	0.00	366.8	1.93	24.17
16	.08	0.00	568.7	.92	15.60	.12	.01	875.4	2.43	10.13
17	.07	0.00	1370.4	4.05	6.48	.26	.05	995.2	11.36	8.91
18	.08	0.00	375.8	.66	23.60	.22	.02	342.7	3.08	25.84
19	.07	0.00	1059.7	3.58	8.37	.25	.03	906.9	9.66	9.78
20	.12	0.00	506.8	.69	17.50	.29	.03	389.1	2.82	22.75
21	.12	.02	1347.4	8.66	6.58	.32	.46	1074.2	15.19	8.25
22	.08	0.00	430.9	1.03	20.58	.29	.04	399.6	5.72	22.16
23	.08	0.00	1623.4	3.30	5.47	.38	.04	1171.2	12.48	7.57
24	.04	0.00	844.9	3.70	10.50	.18	.02	682.3	9.14	13.00
25	.07	0.00	544.1	1.22	16.31	.26	.03	343.7	6.59	25.76
26	.04	0.00	630.3	1.23	14.08	.24	.01	554.8	2.36	15.98
27	.04	0.00	1041.1	3.85	8.52	.20	.04	832.9	11.94	10.65
28	.07	0.00	480.9	1.22	18.45	.26	.02	418.8	5.37	21.15
29	.06	0.00	1137.0	2.13	7.80	.36	.01	1016.4	10.49	8.72
30	.05	.03	834.6	4.45	10.63	.17	.05	781.2	9.86	11.35
31	.09	0.00	515.0	1.33	17.23	.27	.03	382.3	7.53	23.16
32	.02	0.00	551.4	1.09	16.09	.17	.01	484.0	2.00	18.32
BAG (CALC.)	.09	0.00	768.7	2.63	11.54	.23	.06	597.3	8.15	14.84
BAG (ACT.)	.08	0.00	768.7	2.66	11.54	.23	.06	583.3	7.43	15.19
33	.05	0.00	105.4	.07	84.06	.08	0.00	114.1	.27	77.60
34	1.49	0.00	1282.0	.71	6.90	1.31	.02	1369.2	2.20	6.46
35	.60	.00	650.5	.53	13.60	.71	.01	702.6	1.11	12.59
36	.60	0.00	440.1	.36	20.08	.57	0.00	456.4	.40	19.37
37	.43	0.00	448.6	.91	19.73	.24	0.00	360.0	1.28	24.60
38	.07	0.00	502.9	1.22	17.64	.14	0.00	411.2	3.78	21.56
39	.03	.00	631.1	2.01	14.06	.16	.03	518.3	11.10	17.11

EMISSION RESULTS IN GRAMS PER MILE (PER MINUTE FOR IDLE)
FUEL ECONOMY IN MILES PER GALLON (PER MINUTE FOR IDLE)

APPENDIX H

LISTING OF MODAL RESULTS ON INDIVIDUAL VEHICLES

CALIFORNIA

	VEH	YEAR	MAKE	MODL	CID	VEH	YEAR	MAKE	MODL	CID
	5075	1975	DATS	B210	85	5076	1975	TOYO	CORO	133
MODE NO.	HC	CO	CO2	NOXC	FUEL ECONOMY	HC	CO	CO2	NOXC	FUEL ECONOMY
1	.66	5.53	525.0	5.51	16.57	.24	4.54	433.9	5.22	20.09
2	.14	.36	197.1	1.04	44.79	.17	.54	600.1	.26	14.75
3	.53	4.28	477.5	1.39	18.27	0.00	0.00	490.6	1.80	18.09
4	.36	2.12	410.9	1.51	21.37	0.00	1.04	482.8	2.82	18.32
5	.36	2.59	341.5	2.77	25.60	0.00	.32	453.6	3.68	19.54
6	.09	.45	190.0	.84	46.46	.15	.74	290.3	.48	30.40
7	.96	17.28	438.6	7.14	18.93	1.52	24.09	418.4	3.62	19.25
8	.16	.83	217.0	2.98	40.57	.12	.54	335.5	1.16	26.36
9	.38	2.94	391.3	4.15	22.35	0.00	.32	321.6	4.68	27.55
10	.09	.71	199.8	1.53	44.11	.03	.68	268.7	1.07	32.89
11	.43	3.99	432.3	6.11	20.17	.24	33.24	543.6	3.32	14.88
12	.11	.56	213.7	1.71	41.29	0.00	.76	298.6	1.06	29.60
13	.41	4.50	438.2	5.26	19.87	.08	11.66	509.1	4.56	16.82
14	.12	.62	206.3	2.18	42.74	.04	.74	306.2	1.80	28.87
15	.09	.62	190.5	1.42	46.28	0.00	1.58	338.3	.28	26.04
16	.15	2.22	265.5	.37	32.94	0.00	2.46	909.4	.28	9.72
17	.38	3.66	404.4	3.19	21.58	.16	6.03	478.8	4.63	18.16
18	.12	.46	236.8	1.14	37.31	.06	.69	385.8	1.04	22.93
19	.29	2.53	423.9	2.78	20.70	.04	1.71	358.3	3.47	24.58
20	.12	.72	205.2	1.17	42.94	.10	.92	412.6	1.05	21.42
21	.91	14.98	454.4	6.82	18.46	2.03	57.98	444.9	2.41	16.36
22	.12	.56	219.0	2.31	40.30	.06	.87	356.8	2.30	24.77
23	.37	2.96	419.3	1.31	20.88	.12	5.55	379.0	2.88	22.87
24	.26	2.89	351.5	3.42	24.87	.04	.55	376.5	3.17	23.51
25	.14	.64	218.6	2.96	40.34	.06	.76	375.6	3.17	23.54
26	.17	.82	264.3	2.05	33.35	.12	1.46	454.8	.61	19.40
27	.29	2.16	383.1	4.09	22.91	.05	2.57	449.8	3.91	19.55
28	.12	.90	232.8	2.19	37.84	.13	.99	370.7	2.24	23.82
29	.27	2.65	370.9	1.04	23.61	.10	1.49	335.6	2.32	26.24
30	.42	5.55	356.1	3.94	24.24	.35	1.55	379.2	3.23	23.19
31	.15	.72	211.4	3.09	41.67	.11	.49	431.3	3.67	20.53
32	.16	.73	234.8	2.41	37.53	.11	1.54	397.3	.59	22.18
BAG (CALC.)	.24	2.35	303.2	2.97	28.85	.18	10.78	409.4	2.66	20.79
BAG (ACT.)	.26	2.31	297.6	3.00	29.38	.19	10.36	400.9	2.66	21.24
33	.03	.02	34.6	.03	255.75	.02	0.00	50.3	.02	176.26
34	.60	.84	434.0	.19	20.30	.36	.12	606.4	.19	14.60
35	.27	.84	282.4	.29	31.18	.04	.24	716.9	.48	12.37
36	.26	.80	232.0	.51	37.92	.02	.16	478.7	.32	18.53
37	.22	.26	213.4	2.13	41.38	.01	.22	399.3	.49	22.20
38	.21	.54	246.5	1.77	35.78	.06	.29	302.9	2.01	29.24
39	.24	.67	282.2	4.25	31.25	.06	.29	327.7	4.37	27.03

EMISSION RESULTS IN GRAMS PER MILE (PER MINUTE FOR IDLE)
FUEL ECONOMY IN MILES PER GALLON (PER MINUTE FOR IDLE)

APPENDIX H

LISTING OF MODAL RESULTS ON INDIVIDUAL VEHICLES

CALIFORNIA

	VEH	YEAR	MAKE	MODL	CID	VEH	YEAR	MAKE	MODL	CID
	5077	1975	TOYO	CORO	97	5078	1975	VOLK	SEDA	97
MODE NO.	HC	CO	CO2	NOXC	FUEL ECONOMY	HC	CO	CO2	NOXC	FUEL ECONOMY
1	1.73	9.86	843.0	3.02	10.27	1.70	29.30	554.3	3.81	14.65
2	0.00	0.00	253.7	.68	34.98	.15	0.00	277.5	1.03	31.93
3	0.00	0.00	1049.3	.32	8.46	1.55	44.12	678.8	1.34	11.79
4	.02	2.99	635.3	1.71	13.87	.53	1.30	425.6	2.15	20.67
5	.07	2.86	454.1	2.79	19.34	.34	.36	403.6	3.28	21.90
6	.00	0.00	140.8	1.14	63.02	.13	0.00	153.9	1.65	57.51
7	.35	68.97	554.3	2.44	13.37	.81	11.49	321.6	3.54	25.93
8	.01	0.00	158.8	3.10	55.87	.29	0.00	240.3	1.67	36.80
9	.12	1.13	450.7	5.82	19.60	.57	7.04	332.5	4.34	25.70
10	.01	0.00	165.1	2.18	53.73	.27	0.00	191.6	1.40	46.11
11	.31	21.23	554.1	3.85	15.08	1.04	20.64	411.1	3.73	19.86
12	.01	0.00	166.7	2.41	53.22	.27	.10	195.4	1.59	45.18
13	.21	9.43	602.6	5.06	14.36	1.19	45.46	380.2	2.74	19.49
14	.02	1.70	162.4	2.04	53.73	.19	1.65	223.7	1.49	39.13
15	0.00	1.78	223.2	.37	39.27	.36	4.49	208.0	.13	41.06
16	0.00	6.29	458.9	.97	18.93	.54	9.27	655.1	0.00	13.22
17	.37	8.61	613.8	3.82	14.12	.89	15.25	390.4	2.71	21.27
18	.01	2.25	168.1	.99	51.71	.12	.40	202.0	2.07	43.72
19	.18	7.74	596.5	3.01	14.57	.54	6.92	346.1	2.59	24.75
20	.02	3.24	205.4	.95	42.15	.16	1.18	244.6	2.66	35.94
21	1.56	94.18	610.3	1.80	11.63	1.25	36.89	331.2	2.28	22.57
22	.04	1.77	191.5	2.38	45.66	.22	2.00	262.1	1.56	33.37
23	.18	11.95	791.6	2.60	10.94	.94	19.21	405.8	1.72	20.22
24	.07	3.22	441.4	4.72	19.87	.55	19.78	290.9	2.29	27.42
25	.02	.45	196.9	2.46	44.89	.25	.88	263.8	2.23	33.37
26	.01	0.00	341.0	.71	26.02	.52	3.35	307.2	.32	28.25
27	.15	3.08	465.1	6.20	18.87	.67	8.96	360.5	3.39	23.56
28	.03	.54	216.4	1.88	40.83	.27	.46	262.0	1.70	33.67
29	.29	7.79	620.5	2.23	14.01	.56	11.98	319.8	1.26	26.07
30	.10	17.37	419.8	3.03	19.84	.38	5.93	273.4	2.36	31.26
31	.02	.29	197.5	2.56	44.81	.22	.26	295.7	3.02	29.90
32	.02	.49	280.9	.69	31.50	.29	.42	288.0	.43	30.65
BAG (CALC.)	.14	6.80	351.4	3.20	24.49	.51	9.31	305.0	2.42	27.62
BAG (ACT.)	.16	6.35	348.5	3.17	24.72	.55	9.92	302.2	2.39	27.77
33	.02	.01	46.9	.03	188.76	.15	4.51	42.8	.02	176.28
34	.24	.36	659.1	.36	13.44	1.09	29.02	646.1	.56	12.77
35	.04	.90	714.4	.68	12.40	1.08	18.09	521.5	.94	16.04
36	.02	.40	419.7	.25	21.11	.58	7.88	246.2	.45	34.09
37	.00	.40	335.4	.54	26.41	.46	3.96	246.1	1.54	34.97
38	.04	.59	245.9	1.77	35.95	.24	.35	237.4	.94	37.18
39	.11	.91	289.4	5.22	30.48	.20	.16	271.1	3.19	32.64

EMISSION RESULTS IN GRAMS PER MILE (PER MINUTE FOR IDLE)
FUEL ECONOMY IN MILES PER GALLON (PER MINUTE FOR IDLE)

APPENDIX H

LISTING OF MODAL RESULTS ON INDIVIDUAL VEHICLES

CALIFORNIA

	VEH	YEAR	MAKE	MODL	CID	VEH	YEAR	MAKE	MODL	CID
	5079	1975	VOLK	RABB	90	4080	1974	AMC	MATA	304
MODE NO.	HC	CO	CO2	NOXC	FUEL ECONOMY	HC	CO	CO2	NOXC	FUEL ECONOMY
1	.51	1.77	737.9	3.64	11.96	75.39	343.39	1076.8	2.95	4.78
2	.11	.78	218.0	1.22	40.42	12.37	17.70	450.1	1.01	17.16
3	.20	2.48	834.6	2.76	10.58	57.51	128.91	1276.1	3.93	5.34
4	.23	1.15	476.6	3.81	18.52	45.90	152.71	740.7	2.84	7.88
5	.34	1.22	445.4	3.61	19.79	37.41	178.27	626.0	2.14	8.66
6	.06	.33	198.5	1.44	44.57	7.69	22.65	389.6	1.40	19.74
7	.84	35.98	523.0	2.46	15.24	41.01	161.64	864.8	6.07	7.11
8	.09	.86	264.3	1.60	33.37	2.99	14.48	393.4	2.44	20.85
9	.34	1.28	418.7	3.38	21.04	7.68	159.57	696.8	2.85	9.13
10	.07	.60	198.4	1.42	44.48	3.05	7.69	359.7	1.74	23.27
11	.34	3.58	534.4	2.77	16.40	54.46	227.17	832.8	3.64	6.51
12	.06	1.10	198.4	1.45	44.30	4.32	20.68	465.8	1.63	17.33
13	.29	2.06	562.6	2.88	15.66	57.07	254.60	826.7	2.76	6.30
14	.08	.42	202.9	1.54	43.56	3.95	15.08	384.2	1.72	21.11
15	.10	.59	197.2	1.56	44.72	3.43	2.38	461.5	1.05	18.64
16	.16	1.90	490.9	1.07	17.95	25.05	0.00	903.5	2.04	9.03
17	.30	.88	479.2	2.70	18.43	57.44	270.61	806.3	2.02	6.28
18	.09	.45	226.2	1.71	39.07	7.73	21.72	419.2	1.61	18.57
19	.29	1.78	393.4	2.54	22.35	53.95	255.99	799.3	2.02	6.47
20	.05	.55	252.7	1.54	34.98	9.22	25.03	470.7	1.55	16.46
21	.56	27.60	548.8	2.03	14.94	48.34	188.23	992.3	5.95	6.16
22	.08	.40	272.4	1.97	32.47	5.64	16.79	401.5	1.91	19.91
23	.20	1.44	516.4	3.61	17.09	51.36	197.92	1066.7	2.91	5.76
24	.20	1.27	380.0	2.97	23.20	35.80	134.78	632.5	2.34	9.27
25	.14	.74	252.5	2.92	34.93	4.09	18.79	470.5	2.16	17.30
26	.10	1.48	402.3	3.36	21.92	9.02	3.41	727.4	1.93	11.66
27	.24	1.39	454.0	2.73	19.43	50.79	206.81	719.7	2.19	7.36
28	.11	.89	275.2	2.35	32.05	4.92	15.74	440.2	1.93	18.47
29	.17	1.80	420.8	2.82	20.93	18.49	55.54	767.6	4.81	9.72
30	.25	1.46	372.3	2.97	23.64	34.34	139.31	716.4	3.42	8.50
31	.12	.58	295.9	3.63	29.87	5.09	14.31	494.8	2.71	16.64
32	.09	.69	312.7	2.54	28.26	6.56	8.94	469.1	1.31	17.61
BAG (CALC.)	.19	2.63	356.8	2.35	24.55	22.26	81.81	606.2	2.69	11.02
BAG (ACT.)	.20	2.44	351.2	2.57	24.95	22.11	81.05	617.4	2.69	10.89
33	.03	.00	60.7	.03	146.10	3.06	3.87	90.9	.14	83.21
34	.24	.01	748.0	.38	11.85	29.28	44.92	1149.0	1.55	6.76
35	.21	.06	448.1	.85	19.77	14.85	33.62	667.4	.87	11.57
36	.12	.00	305.0	.88	29.06	8.99	7.75	640.7	1.16	13.03
37	.13	.06	258.4	2.97	34.28	2.97	4.79	480.1	1.41	17.86
38	.15	.25	284.6	3.30	31.09	2.16	5.26	531.8	2.60	16.23
39	.15	.36	343.5	1.95	25.76	1.43	5.68	631.1	4.31	13.77

EMISSION RESULTS IN GRAMS PER MILE (PER MINUTE FOR IDLE)
FUEL ECONOMY IN MILES PER GALLON (PER MINUTE FOR IDLE)

APPENDIX H

LISTING OF MODAL RESULTS ON INDIVIDUAL VEHICLES

CALIFORNIA

	VEH	YEAR	MAKE	MODL	CID	VEH	YEAR	MAKE	MODL	CID
	4081	1974	BUIC	LESA	455	4082	1974	CADI	COUP	472
MODE NO.	HC	CO	CO2	NOXC	FUEL ECONOMY	HC	CO	CO2	NOXC	FUEL ECONOMY
1	4.53	21.36	1346.0	11.28	6.37	3.58	70.77	1594.9	3.20	5.17
2	2.10	4.39	610.4	.63	14.23	1.10	30.08	561.1	.45	14.51
3	7.11	10.47	1395.9	5.45	6.19	4.99	136.53	1375.9	1.13	5.53
4	2.87	6.32	1016.8	5.71	8.57	2.42	55.97	895.9	1.13	8.95
5	2.50	5.87	798.0	5.97	10.89	1.67	26.52	861.6	1.98	9.77
6	4.77	4.72	495.4	.92	17.14	1.17	9.70	358.9	.47	23.49
7	4.80	84.24	1014.5	6.19	7.64	2.21	70.11	1025.1	3.97	7.77
8	7.83	4.83	510.7	3.57	16.34	1.97	6.93	532.2	.89	16.16
9	2.31	28.45	855.5	7.25	9.78	1.34	28.43	795.7	2.61	10.51
10	6.21	3.89	447.8	2.18	18.74	2.21	6.55	416.6	.62	20.45
11	2.54	42.85	1089.4	10.30	7.62	1.84	52.61	1160.9	3.80	7.10
12	7.94	4.64	459.7	2.52	18.03	4.03	8.69	439.6	.72	19.04
13	2.39	28.81	1084.5	10.30	7.80	1.99	46.75	1094.0	3.85	7.56
14	5.44	4.31	514.7	3.56	16.47	2.05	5.92	413.0	.86	20.70
15	1.97	2.26	618.4	.70	14.13	1.02	20.82	504.8	.44	16.41
16	1.46	1.51	1500.7	1.34	5.89	2.73	0.00	1153.1	.48	7.64
17	2.67	13.93	1083.4	8.99	7.97	2.15	30.38	1107.8	3.43	7.64
18	5.34	2.71	523.5	1.42	16.30	1.22	13.70	444.9	.48	18.87
19	2.69	22.04	844.8	6.33	10.00	2.25	34.93	1012.9	2.75	8.26
20	6.46	3.67	610.2	1.34	13.95	1.36	17.29	461.8	.45	17.99
21	4.35	132.93	1065.7	6.18	6.89	2.57	93.77	1228.7	4.44	6.41
22	7.60	4.11	531.4	3.67	15.79	2.22	7.06	455.6	.74	18.73
23	3.82	10.43	1038.7	.70	8.32	3.30	40.19	1253.0	2.69	6.69
24	2.05	9.18	714.0	6.83	12.08	1.47	31.30	727.4	2.31	11.36
25	4.34	5.48	600.3	4.68	14.25	2.24	5.99	467.1	.85	18.35
26	3.54	5.71	872.4	1.72	9.94	1.41	51.30	690.7	.58	11.44
27	2.35	16.62	922.8	9.28	9.28	1.73	36.45	999.6	2.82	8.35
28	5.78	5.38	584.2	3.44	14.53	1.73	6.88	508.0	.77	16.93
29	3.40	10.33	834.8	5.35	10.30	2.30	40.22	1113.6	1.37	7.50
30	2.07	10.58	689.4	6.40	12.46	1.78	43.53	827.1	2.66	9.85
31	3.48	5.44	664.9	5.25	12.97	2.27	7.13	527.5	.90	16.26
32	3.35	4.18	821.9	1.50	10.58	1.05	35.61	559.2	.46	14.35
BAG (CALC.)	3.52	19.12	760.9	5.61	11.06	1.67	25.34	724.4	1.70	11.53
BAG (ACT.)	3.45	19.82	732.7	5.30	11.45	1.77	24.96	730.0	1.67	11.45
33	.36	.83	118.6	.06	73.34	.39	4.85	126.8	.11	65.41
34	4.20	10.73	1445.6	.75	6.01	4.03	57.19	1540.1	.91	5.40
35	1.62	5.71	919.3	.56	9.51	1.95	26.57	750.2	.45	11.12
36	1.52	4.09	688.9	.55	12.68	1.48	25.50	606.8	.42	13.62
37	2.32	4.17	532.9	.44	16.23	1.11	22.34	492.9	.34	16.70
38	1.08	3.75	513.2	1.57	16.99	1.17	10.88	513.4	.67	16.61
39	.97	4.94	605.2	6.70	14.41	.48	6.30	466.9	.70	18.56

EMISSION RESULTS IN GRAMS PER MILE (PER MINUTE FOR IDLE)
FUEL ECONOMY IN MILES PER GALLON (PER MINUTE FOR IDLE)

APPENDIX H

LISTING OF MODAL RESULTS ON INDIVIDUAL VEHICLES

CALIFORNIA

	VEH	YEAR	MAKE	MODL	CID	VEH	YEAR	MAKE	MODL	CID
	4083	1974	CHEV	VEGA	140	4084	1974	CHEV	MONT	350
MODE NO.	HC	CO	CO2	NOXC	FUEL ECONOMY	HC	CO	CO2	NOXC	FUEL ECONOMY
1	4.65	124.94	851.2	4.41	8.36	11.90	24.02	931.0	9.55	8.82
2	1.07	21.41	204.9	1.15	36.68	10.07	8.91	381.1	.30	20.78
3	5.27	101.55	797.4	3.08	9.12	12.56	33.63	1167.0	4.08	7.05
4	2.35	29.15	620.6	3.29	13.17	3.90	15.27	680.1	5.96	12.39
5	1.99	25.71	526.2	5.43	15.49	2.53	10.91	674.4	6.35	12.69
6	.97	8.99	172.0	.58	46.90	5.62	2.87	282.4	1.31	29.12
7	4.38	198.42	597.4	3.77	9.62	3.33	51.63	789.2	9.88	10.07
8	.84	6.92	270.7	.99	31.22	3.00	4.37	306.6	3.16	27.48
9	2.85	96.69	471.6	2.94	14.03	2.34	9.71	648.8	8.61	13.22
10	.99	9.61	183.1	.62	44.08	7.18	3.95	277.5	1.73	28.96
11	3.79	131.69	581.6	3.78	11.09	3.68	16.77	856.0	12.49	9.93
12	1.50	14.88	241.2	.77	32.96	9.73	5.13	309.4	2.65	25.48
13	3.37	106.93	557.7	3.99	12.05	4.04	16.42	819.3	11.55	10.34
14	1.18	8.30	198.3	.90	41.26	4.66	5.47	356.8	3.15	23.35
15	.95	16.11	172.1	.99	44.28	3.15	7.47	500.1	.82	17.01
16	1.65	39.92	402.4	.74	18.87	12.13	35.03	756.3	1.02	10.44
17	3.43	84.29	672.4	3.57	10.88	4.18	15.39	759.2	11.29	11.14
18	.85	8.87	236.2	.61	35.11	5.32	3.86	310.2	1.37	26.64
19	2.40	68.89	552.6	3.80	13.28	3.26	15.09	709.0	8.12	11.94
20	1.31	13.28	184.3	.74	42.39	7.87	4.32	438.6	1.98	18.87
21	5.27	230.70	614.3	3.06	8.93	3.82	32.97	894.4	12.26	9.26
22	1.28	10.97	218.4	1.05	37.02	7.86	5.65	333.8	3.33	24.14
23	3.00	62.72	713.2	4.39	10.81	5.75	20.68	850.1	7.10	9.85
24	1.90	69.13	445.8	3.87	15.84	2.27	10.98	583.5	7.60	14.60
25	.81	8.50	273.0	1.18	30.72	3.41	7.08	375.6	4.77	22.32
26	1.31	9.91	290.8	1.62	28.59	3.38	15.33	572.7	.87	14.61
27	2.51	76.19	534.6	3.87	13.40	3.08	13.84	698.3	10.60	12.16
28	1.27	14.51	243.6	.85	32.82	7.14	6.75	372.3	3.44	21.88
29	2.83	57.63	583.5	2.55	12.99	6.89	28.44	648.5	4.61	12.41
30	2.55	108.57	460.3	3.70	13.89	2.10	12.22	595.3	7.20	14.29
31	.93	9.73	315.2	1.19	26.62	1.91	9.32	474.8	5.32	17.91
32	1.25	21.08	254.7	1.87	30.42	5.64	17.32	547.1	.79	14.99
BAG (CALC.)	1.90	47.21	383.1	2.15	19.16	4.71	11.79	544.7	6.29	15.35
BAG (ACT.)	1.89	46.51	368.9	2.04	19.81	4.76	11.17	533.5	5.90	15.68
33	.46	9.44	39.7	.06	158.54	1.83	.63	89.1	.09	92.55
34	5.20	116.86	477.1	.57	13.11	26.00	7.75	1072.9	.83	7.60
35	2.74	57.23	256.6	.47	24.99	4.20	25.65	780.2	.51	10.64
36	1.04	2.28	316.5	.94	27.45	2.85	16.70	519.7	.40	15.99
37	1.31	1.80	265.6	1.63	32.56	1.57	3.87	460.0	1.52	18.84
38	.93	4.18	334.8	1.12	25.78	1.55	3.40	393.3	1.78	21.99
39	.69	8.42	414.5	1.67	20.65	1.37	6.11	490.7	5.55	17.59

EMISSION RESULTS IN GRAMS PER MILE (PER MINUTE FOR IDLE)
FUEL ECONOMY IN MILES PER GALLON (PER MINUTE FOR IDLE)

APPENDIX H

LISTING OF MODAL RESULTS ON INDIVIDUAL VEHICLES

CALIFORNIA

	VEH	YEAR	MAKE	MODL	CID	VEH	YEAR	MAKE	MODL	CID
	4085	1974	CHEV	MONT	350	4086	1974	CHEV	CAPR	350
MODE NO.	HC	CO	CO2	NOXC	FUEL ECONOMY	HC	CO	CO2	NOXC	FUEL ECONOMY
1	2.61	71.84	1635.6	5.03	5.05	2.93	19.14	1492.6	6.09	5.79
2	.91	8.15	779.2	.56	11.17	1.29	4.47	481.3	.62	18.03
3	3.54	24.40	2004.5	1.75	4.32	4.51	27.16	1258.4	2.39	6.75
4	1.91	26.64	1065.4	2.17	7.97	1.81	11.22	1022.8	3.42	8.48
5	1.44	40.90	806.7	2.14	10.14	1.13	4.98	790.0	3.89	11.07
6	.49	6.95	417.7	.59	20.63	1.84	2.63	301.7	.71	28.48
7	2.21	161.78	1041.7	2.90	6.81	3.38	73.90	977.9	6.64	8.03
8	.36	7.71	417.6	.79	20.60	4.53	2.62	326.2	1.23	25.75
9	.84	51.39	818.6	3.12	9.84	1.13	10.17	783.0	4.35	11.06
10	.27	5.58	416.4	.55	20.84	2.56	2.87	304.8	.88	27.96
11	.96	66.20	1080.8	4.46	7.47	1.80	19.31	1091.2	6.96	7.87
12	.29	8.09	461.5	.60	18.68	3.63	4.68	353.1	.82	23.86
13	1.01	67.32	1111.1	4.18	7.27	1.39	16.31	1098.6	6.93	7.86
14	.20	5.86	416.8	.52	20.80	2.56	3.03	332.4	.78	25.70
15	.70	5.74	617.4	.56	14.12	.50	6.76	406.9	.45	21.18
16	1.50	26.49	1632.8	1.79	5.29	1.44	27.22	947.0	.56	8.93
17	1.41	67.46	1123.8	3.67	7.19	1.55	13.10	1160.1	6.11	7.49
18	.39	8.38	522.2	.39	16.54	1.65	3.25	408.1	.41	21.21
19	1.29	52.17	1033.9	3.18	7.92	1.42	13.05	1034.7	5.33	8.38
20	.43	8.11	575.0	.42	15.07	1.73	3.97	438.0	.53	19.73
21	1.29	91.78	1223.2	5.31	6.47	2.48	39.91	1196.1	8.91	7.01
22	.31	7.14	513.3	.58	16.89	3.42	3.58	380.2	.90	22.38
23	1.55	47.74	1405.6	3.46	5.97	2.59	15.83	1334.2	4.26	6.49
24	1.07	37.95	718.8	2.34	11.35	1.10	7.45	808.1	4.34	10.78
25	.27	9.43	468.9	.92	18.32	3.23	4.50	389.0	1.01	21.84
26	.83	13.65	883.0	.41	9.79	.76	12.56	630.4	.98	13.60
27	1.01	53.68	905.8	3.22	8.93	1.09	9.96	935.6	5.43	9.30
28	.27	8.23	540.8	.85	16.00	2.32	4.78	404.9	.95	21.14
29	6.63	29.07	1081.4	1.52	7.73	2.06	15.63	1005.5	2.93	8.56
30	4.66	45.62	782.7	2.54	10.21	1.38	12.67	801.8	5.66	10.74
31	.62	10.34	477.1	1.00	17.92	3.37	4.63	382.2	1.17	22.18
32	15.98	16.84	815.6	.57	9.94	.69	9.58	608.9	.53	14.17
BAG (CALC.)	.68	29.55	721.3	1.91	11.53	1.56	10.79	675.2	2.90	12.73
BAG (ACT.)	.72	29.52	718.5	1.91	11.57	1.65	10.62	680.7	2.88	12.63
33	.28	4.41	206.1	.18	41.50	.42	4.97	112.9	.05	72.70
34	3.48	34.99	2456.0	2.36	3.52	4.50	25.83	1410.4	.70	6.06
35	1.21	15.70	1238.2	.98	7.01	1.10	17.52	948.0	.52	9.07
36	.87	10.04	825.0	.72	10.52	.83	12.42	632.0	.40	13.57
37	1.03	5.40	518.9	.33	16.72	.76	2.64	458.3	.49	19.09
38	.63	10.48	491.0	.67	17.42	.98	3.66	467.9	1.03	18.62
39	.22	13.00	566.2	1.82	15.11	.37	3.64	547.0	2.21	16.02

EMISSION RESULTS IN GRAMS PER MILE (PER MINUTE FOR IDLE)
FUEL ECONOMY IN MILES PER GALLON (PER MINUTE FOR IDLE)

APPENDIX H

LISTING OF MODAL RESULTS ON INDIVIDUAL VEHICLES

CALIFORNIA

	VEH	YEAR	MAKE	MODL	CID	VEH	YEAR	MAKE	MODL	CID
	4087	1974	CHEV	IMPA	350	4088	1974	CHEV	CAPR	400
MODE NO.	HC	CO	CO2	NOXC	FUEL ECONOMY	HC	CO	CO2	NOXC	FUEL ECONOMY
1	54.94	131.51	1210.9	7.07	5.58	1.90	55.95	1675.8	4.09	5.02
2	24.36	22.57	444.6	.57	15.92	.48	2.47	641.0	.32	13.73
3	59.00	149.05	1137.7	1.89	5.69	3.82	68.59	1965.9	1.87	4.26
4	35.56	22.57	834.8	4.88	9.03	1.69	32.07	1074.0	2.24	7.86
5	31.18	42.06	745.1	5.07	9.75	1.23	24.84	826.2	2.89	10.21
6	16.31	5.23	318.9	1.32	23.42	2.96	1.66	315.8	.55	27.08
7	36.98	239.85	877.1	3.62	6.47	3.59	199.26	1056.1	3.66	6.43
8	20.21	7.96	395.8	2.39	18.79	2.27	5.38	499.7	1.25	17.22
9	27.21	158.93	669.1	4.36	8.83	1.20	59.05	857.1	3.17	9.31
10	16.32	9.64	353.0	1.71	21.14	3.04	3.86	414.3	.78	20.64
11	54.14	280.01	800.0	2.77	6.29	1.69	91.92	1191.7	4.69	6.62
12	19.78	9.41	413.5	2.04	18.08	3.84	4.06	467.0	.97	18.28
13	52.25	239.80	851.7	3.86	6.37	1.52	83.69	1225.8	4.22	6.52
14	17.59	8.14	393.2	2.10	19.22	2.36	4.26	462.1	.88	18.63
15	23.66	16.65	507.9	.62	14.57	.76	4.69	567.6	.55	15.37
16	40.45	56.75	857.1	.62	8.26	.91	14.95	1129.8	.68	7.68
17	48.95	154.27	869.9	5.29	7.00	1.51	76.64	1229.1	3.23	6.55
18	19.03	9.62	408.1	1.27	18.35	2.52	4.85	449.9	.67	19.06
19	36.37	109.12	761.3	4.52	8.47	.98	51.33	940.9	2.45	8.66
20	24.04	9.35	438.6	1.38	16.76	2.30	4.34	620.1	.68	14.00
21	48.56	271.74	951.9	3.47	5.79	3.40	190.76	1206.1	3.67	5.85
22	21.14	13.93	418.5	2.15	17.49	2.80	6.29	527.8	1.00	16.24
23	42.45	58.78	1005.4	7.70	7.20	1.88	42.75	1358.1	2.57	6.20
24	27.75	130.32	596.0	3.29	9.99	.79	42.16	792.2	2.32	10.31
25	20.89	14.59	499.8	3.14	15.07	1.77	6.82	580.5	1.25	14.87
26	38.90	30.86	684.0	.95	10.37	1.02	10.63	881.6	.86	9.84
27	42.33	186.04	672.1	3.34	8.08	.95	55.23	998.7	3.03	8.15
28	21.28	11.02	473.0	2.35	15.91	2.39	6.82	552.8	1.06	15.54
29	36.39	50.75	799.9	5.18	8.92	1.50	30.10	1152.8	1.31	7.37
30	33.36	164.45	587.4	2.38	9.33	1.17	55.56	819.5	2.61	9.75
31	22.89	16.67	508.5	3.45	14.61	2.07	9.71	616.7	1.58	13.90
32	28.96	23.73	610.3	.81	12.00	1.10	8.70	709.6	.71	12.21
BAG (CALC.)	31.15	80.38	598.9	3.06	10.77	1.60	36.78	783.6	1.93	10.48
BAG (ACT.)	31.89	82.92	596.1	3.00	10.72	1.65	36.89	772.3	1.89	10.62
33	4.70	19.42	77.9	.03	71.96	.37	.68	126.9	.10	68.72
34	52.33	166.71	1027.6	.37	6.10	3.80	8.99	1530.4	.80	5.70
35	42.13	55.29	948.8	.47	7.59	.85	5.74	943.6	.60	9.29
36	27.74	43.31	614.7	.31	11.52	.65	3.87	623.9	.40	14.04
37	21.47	20.99	437.2	.55	16.49	1.43	5.12	573.2	.34	15.15
38	20.48	7.16	462.0	2.35	16.49	.38	3.51	560.5	.86	15.65
39	22.39	23.44	553.1	4.59	13.43	.16	5.40	517.4	1.16	16.86

EMISSION RESULTS IN GRAMS PER MILE (PER MINUTE FOR IDLE)
FUEL ECONOMY IN MILES PER GALLON (PER MINUTE FOR IDLE)

APPENDIX H

LISTING OF MODAL RESULTS ON INDIVIDUAL VEHICLES

CALIFORNIA

	VEH	YEAR	MAKE	MODL	CID	VEH	YEAR	MAKE	MODL	CID
	4089	1974	CHRY	NEWP	360	4090	1974	DODG	DART	225
MODE NO.	HC	CO	CO2	NOXC	FUEL ECONOMY	HC	CO	CO2	NOXC	FUEL ECONOMY
1	12.11	17.89	1381.3	11.85	6.13	3.37	42.09	1176.8	14.32	7.08
2	11.79	9.86	290.6	1.20	25.84	1.86	22.37	348.2	2.30	22.80
3	28.78	38.57	1400.1	1.80	5.72	3.79	90.61	1180.2	5.59	6.65
4	7.99	9.43	895.6	5.55	9.48	2.00	19.15	807.5	9.42	10.52
5	1.97	3.56	825.4	7.28	10.60	1.71	5.79	614.0	12.07	14.12
6	6.13	3.77	198.3	2.81	39.68	.89	4.86	275.6	2.74	31.02
7	3.92	109.13	990.2	11.62	7.56	1.98	33.84	848.3	12.88	9.78
8	3.48	3.03	233.3	4.25	35.63	.89	6.66	281.9	2.89	30.07
9	2.48	3.36	737.0	11.77	11.83	1.27	13.15	636.2	11.25	13.43
10	7.90	4.70	219.0	2.79	35.30	1.36	12.07	215.5	2.45	37.16
11	4.47	20.41	949.6	19.56	8.91	2.35	47.76	797.8	12.43	10.08
12	8.62	6.12	206.6	3.53	36.44	1.96	17.98	282.4	2.57	28.01
13	4.02	14.65	1031.4	16.49	8.32	2.03	31.60	778.7	13.04	10.63
14	6.10	4.50	206.7	4.16	38.08	1.18	8.45	287.7	4.03	29.13
15	5.31	5.01	217.2	2.27	36.69	.87	9.64	347.7	1.66	24.28
16	27.30	42.84	574.8	1.23	12.18	3.41	70.34	793.9	1.17	9.70
17	6.69	8.99	1063.9	13.71	8.07	1.80	18.61	855.4	12.43	9.97
18	8.94	4.85	175.5	3.20	41.96	1.00	5.02	212.2	2.74	39.75
19	4.71	7.60	1035.5	9.79	8.35	1.58	20.70	747.5	10.61	11.31
20	11.91	6.25	218.8	3.71	33.32	1.55	14.33	386.5	2.41	21.44
21	5.42	37.22	1174.0	17.98	7.10	2.94	91.51	867.4	11.79	8.70
22	9.06	6.26	206.3	4.66	36.24	1.63	16.64	329.0	3.31	24.63
23	11.59	14.13	1110.5	7.94	7.59	2.04	32.64	915.7	8.91	9.12
24	1.71	3.83	796.0	9.82	10.99	1.26	13.62	537.3	10.17	15.77
25	4.52	4.01	281.8	6.31	29.34	1.09	7.00	293.3	5.16	28.84
26	6.66	8.07	349.6	2.69	23.15	1.46	11.41	410.0	2.09	20.52
27	3.69	5.56	874.8	13.54	9.91	1.47	17.76	724.7	11.23	11.72
28	8.70	6.51	275.0	4.91	28.37	1.48	15.50	293.0	4.95	27.56
29	10.88	16.03	1087.4	3.94	7.74	1.95	29.39	782.0	6.73	10.64
30	2.05	7.95	883.6	8.94	9.83	1.78	35.34	546.4	9.14	14.61
31	4.15	4.13	251.6	6.87	32.71	.82	4.22	291.2	4.90	29.54
32	.57	6.97	306.9	3.56	25.49	1.24	17.90	319.9	1.60	25.22
BAG (CALC.)	5.98	10.47	568.0	8.49	14.71	1.53	22.01	498.5	6.74	16.50
BAG (ACT.)	5.94	10.81	554.1	8.03	15.05	1.63	21.19	484.5	6.50	16.97
33	5.59	5.07	60.7	.03	102.70	.55	15.91	62.8	.05	99.12
34	61.76	64.99	840.2	.58	7.80	6.38	176.35	752.8	.59	8.45
35	10.45	32.43	642.0	.38	12.22	3.45	93.89	375.5	.30	16.62
36	.68	21.37	502.8	.37	16.48	2.54	49.09	350.2	.40	20.38
37	1.39	5.33	360.0	1.77	23.81	1.49	2.38	303.2	5.29	28.48
38	2.39	2.64	423.7	4.15	20.38	.99	1.65	343.7	7.51	25.40
39	1.64	2.81	519.9	7.38	16.76	.95	2.94	427.8	12.21	20.38

EMISSION RESULTS IN GRAMS PER MILE (PER MINUTE FOR IDLE)
FUEL ECONOMY IN MILES PER GALLON (PER MINUTE FOR IDLE)

APPENDIX H

LISTING OF MODAL RESULTS ON INDIVIDUAL VEHICLES

CALIFORNIA

	VEH	YEAR	MAKE	MODL	CID	VEH	YEAR	MAKE	MODL	CID
	4091	1974	FORD	PINT	140	4092	1974	FORD	MAVE	302
MODE NO.	HC	CO	CO2	NOXC	FUEL ECONOMY	HC	CO	CO2	NOXC	FUEL ECONOMY
1	8.45	92.40	699.2	2.38	10.19	6.35	168.68	1080.5	1.50	6.50
2	1.57	7.66	274.8	.29	30.42	.95	15.37	395.6	.45	20.99
3	2.15	60.64	754.7	1.59	10.36	7.51	152.97	1292.2	2.17	5.70
4	3.03	33.95	441.8	1.33	17.58	2.78	21.84	824.8	2.47	10.23
5	2.26	29.36	384.8	1.40	20.26	3.06	61.57	690.6	1.29	11.13
6	1.86	6.62	184.3	.43	44.23	1.55	3.61	304.6	.81	28.16
7	2.28	41.78	469.5	5.45	16.36	5.08	188.58	755.7	1.37	8.31
8	1.98	8.60	257.9	.41	31.96	3.10	5.17	318.4	.51	26.38
9	1.87	33.60	411.1	1.96	18.89	2.81	53.90	694.2	2.08	11.27
10	1.61	3.74	229.1	.28	36.98	1.64	5.02	326.4	.39	26.14
11	4.50	72.09	461.0	3.19	15.08	4.39	134.17	749.1	1.79	9.11
12	2.98	8.91	212.9	.37	37.56	3.41	7.04	345.4	.44	24.16
13	4.23	78.74	494.4	2.39	14.05	4.29	128.28	708.3	1.61	9.61
14	1.66	4.25	235.4	.43	35.89	2.14	5.42	384.0	.50	22.23
15	.87	14.96	262.4	.25	30.75	.72	8.36	362.1	.69	23.51
16	2.54	18.31	684.5	.49	12.30	2.75	41.57	762.6	.36	10.61
17	4.90	84.97	510.3	1.59	13.46	4.05	115.22	730.4	1.01	9.60
18	2.05	7.24	212.0	.49	38.62	1.80	3.79	373.0	.60	23.07
19	4.14	69.71	456.1	1.53	15.34	3.49	104.07	687.9	1.62	10.29
20	2.36	9.80	208.2	.70	38.42	1.95	8.28	495.7	.64	17.24
21	5.75	82.03	516.5	4.28	13.37	5.14	179.15	772.4	1.42	8.29
22	2.03	4.51	240.2	.45	34.98	2.94	8.59	400.6	.64	20.96
23	4.46	62.98	544.6	1.30	13.49	3.56	54.41	932.3	1.53	8.62
24	2.16	33.27	416.5	1.50	18.66	2.82	70.93	576.4	1.18	12.74
25	1.43	4.44	237.5	.63	35.65	2.62	7.01	474.6	.79	17.97
26	1.40	18.33	321.8	.30	25.00	1.88	8.77	719.1	1.76	12.01
27	3.28	53.83	433.4	1.56	16.80	3.13	72.69	640.3	1.65	11.61
28	1.84	5.23	259.4	.42	32.45	2.50	10.18	445.1	.91	18.92
29	4.71	48.48	538.3	1.24	14.10	3.00	49.00	723.3	1.58	10.96
30	1.88	31.13	396.6	2.32	19.66	3.20	107.50	569.3	1.01	11.86
31	2.46	12.04	254.7	.62	31.54	2.85	9.09	533.5	1.00	15.94
32	1.63	16.17	308.0	.29	26.21	1.63	12.47	609.2	1.37	14.00
BAG (CALC.)	2.15	26.23	352.4	1.29	22.17	2.57	42.04	552.4	1.20	14.16
BAG (ACT.)	2.22	26.34	355.2	1.26	21.99	2.53	40.86	546.8	1.20	14.34
33	.05	2.96	62.3	.02	132.29	.43	3.28	93.3	.06	88.91
34	.71	44.49	730.2	.19	11.06	4.78	43.12	1139.8	.55	7.26
35	.80	27.57	700.1	.56	11.90	2.18	23.78	578.1	.29	14.26
36	.30	13.73	442.0	.31	19.11	1.77	18.60	455.1	.31	18.12
37	.61	13.60	298.9	.60	27.54	.90	3.47	470.5	1.10	18.53
38	.58	8.47	277.2	.82	30.36	1.16	5.25	596.7	.85	14.58
39	.61	5.08	359.0	1.27	24.05	1.13	10.76	521.8	1.50	16.36

EMISSION RESULTS IN GRAMS PER MILE (PER MINUTE FOR IDLE)
FUEL ECONOMY IN MILES PER GALLON (PER MINUTE FOR IDLE)

APPENDIX H

LISTING OF MODAL RESULTS ON INDIVIDUAL VEHICLES

CALIFORNIA

	VEH	YEAR	MAKE	MODL	CID	VEH	YEAR	MAKE	MODL	CID
	4093	1974	FORD	MUST	139	4094	1974	FORD	LTD	400
MODE NO.	HC	CO	CO2	NOXC	FUEL ECONOMY	HC	CO	CO2	NOXC	FUEL ECONOMY
1	2.72	111.94	982.8	2.02	7.60	2.46	112.01	1496.4	3.50	5.28
2	.27	5.73	235.3	.29	36.21	2.33	86.83	582.1	.23	12.23
3	1.92	81.13	1125.6	.64	7.05	2.77	114.43	1696.9	2.05	4.71
4	.48	19.25	736.6	1.50	11.55	1.44	75.53	1028.4	1.69	7.71
5	1.15	45.13	543.1	1.71	14.37	1.16	44.07	904.9	2.30	9.08
6	1.14	4.02	171.9	.40	48.82	2.73	25.95	495.0	.15	16.30
7	2.90	121.04	675.3	5.84	10.15	2.59	88.30	1052.6	7.29	7.40
8	1.60	3.99	188.7	.86	44.38	5.79	32.06	481.1	.40	16.14
9	1.07	47.28	533.4	3.43	14.52	1.19	23.34	738.3	4.71	11.40
10	1.15	4.14	168.7	.59	49.61	4.39	29.73	389.3	.36	19.73
11	1.94	79.56	673.4	5.55	11.03	1.39	38.69	1051.5	7.00	7.95
12	2.40	3.30	171.2	.79	48.23	5.78	44.72	423.3	.37	17.34
13	1.72	79.04	649.2	3.91	11.40	1.28	40.07	1070.9	5.80	7.80
14	1.45	4.91	211.2	.57	39.70	5.07	33.29	395.9	.62	19.11
15	.47	4.69	233.9	.25	36.56	.94	24.15	544.7	.59	15.15
16	.95	23.59	515.9	.49	15.96	0.00	98.79	786.6	.50	9.42
17	1.43	80.93	681.6	1.97	10.91	1.14	58.89	1135.0	3.52	7.21
18	1.00	5.74	205.7	.31	40.72	2.89	41.50	466.1	.22	16.42
19	1.09	68.38	614.4	1.51	12.24	1.17	42.71	930.4	3.15	8.87
20	1.21	7.60	230.6	.23	36.02	3.73	58.86	579.4	.32	12.98
21	3.01	121.66	716.4	6.30	9.68	1.74	67.57	1061.8	7.44	7.56
22	1.19	5.61	267.5	.62	31.69	5.79	47.62	458.9	.60	16.07
23	1.15	68.07	765.7	.87	10.13	1.84	87.57	1070.1	1.71	7.31
24	.84	48.34	488.5	3.76	15.65	.74	36.11	851.1	3.15	9.75
25	1.42	6.14	264.9	.10	31.81	4.16	39.95	470.5	.72	16.24
26	.43	11.65	438.2	.18	19.39	2.58	57.07	901.3	.43	8.88
27	.70	46.39	570.5	4.19	13.75	.97	36.39	981.5	3.69	8.52
28	1.23	5.80	281.2	.11	30.17	4.87	41.68	494.9	.69	15.41
29	.52	34.74	658.8	1.46	12.41	1.92	75.87	1126.5	1.04	7.09
30	1.24	60.30	509.5	6.24	14.59	.68	27.23	828.2	4.63	10.16
31	1.15	4.99	332.5	.10	25.80	4.29	55.26	488.9	.77	15.06
32	.52	9.26	347.5	.18	24.40	1.87	63.61	718.1	.53	10.77
BAG (CALC.)	1.02	28.33	427.4	1.87	18.68	2.45	46.84	729.4	2.16	10.95
BAG (ACT.)	1.06	28.24	421.8	1.84	18.90	2.39	47.11	720.9	2.16	11.06
33	.18	5.76	53.1	.03	141.43	.53	12.59	118.0	.08	63.64
34	2.01	62.59	656.7	.38	11.66	5.53	141.39	1397.6	.74	5.42
35	.71	3.26	421.1	.28	20.71	2.97	76.79	707.3	.38	10.60
36	.41	14.35	399.1	.26	20.98	1.72	36.33	546.8	.32	14.57
37	.76	16.32	268.0	.26	29.98	.45	11.19	641.2	.54	13.44
38	.60	13.76	300.2	.69	27.41	.63	16.09	597.1	.47	14.21
39	.36	14.09	364.7	2.66	22.87	.92	31.46	570.5	1.59	14.25

EMISSION RESULTS IN GRAMS PER MILE (PER MINUTE FOR IDLE)
FUEL ECONOMY IN MILES PER GALLON (PER MINUTE FOR IDLE)

APPENDIX H

LISTING OF MODAL RESULTS ON INDIVIDUAL VEHICLES

CALIFORNIA

	VEH	YEAR	MAKE	MODL	CID	VEH	YEAR	MAKE	MODL	CID
	4095	1974	FORD	LTD	351	4096	1974	MERC	MONT	460
MODE NO.	HC	CO	CO2	NOXC	FUEL ECONOMY	HC	CO	CO2	NOXC	FUEL ECONOMY
1	4.20	66.76	1414.1	19.46	5.79	4.07	39.67	1456.6	9.87	5.79
2	.98	38.28	435.4	.69	17.80	.95	6.18	698.7	1.00	12.48
3	4.12	135.56	1448.6	5.94	5.30	3.29	42.32	2295.5	2.45	3.74
4	2.31	54.14	939.5	8.82	8.60	1.95	16.10	1095.3	3.92	7.88
5	1.73	22.60	798.2	10.63	10.58	1.62	14.82	775.8	6.50	11.04
6	2.49	10.20	284.9	2.02	28.74	3.57	2.88	400.1	1.04	21.34
7	3.27	71.82	913.6	16.54	8.56	4.38	160.07	970.8	7.12	7.18
8	1.20	10.57	410.0	4.87	20.62	2.61	5.86	503.7	3.45	17.03
9	1.83	45.91	816.2	13.23	9.93	2.43	54.24	776.3	8.34	10.21
10	1.09	7.89	391.8	3.30	21.77	3.44	6.37	434.8	2.26	19.47
11	3.07	75.35	1020.2	17.58	7.73	3.82	90.52	1038.9	10.09	7.44
12	1.81	18.26	401.2	3.21	20.37	4.33	7.24	497.2	2.57	16.99
13	2.87	71.75	1057.0	16.75	7.53	3.44	75.78	1048.8	10.61	7.53
14	1.17	10.72	400.2	4.61	21.10	3.75	5.72	461.1	2.58	18.41
15	.70	11.39	480.1	.75	17.74	.81	2.54	653.1	.96	13.46
16	2.11	116.43	932.6	0.00	7.91	0.00	40.00	1243.1	0.00	6.80
17	2.70	54.01	1109.9	14.71	7.38	2.80	34.92	1100.0	10.50	7.63
18	1.26	14.45	430.3	2.02	19.42	2.80	5.00	480.0	.94	17.87
19	2.18	46.75	952.9	11.59	8.59	2.17	29.03	842.4	8.53	9.92
20	.85	19.84	480.6	2.02	17.25	2.90	5.24	559.0	1.08	15.40
21	3.86	91.28	1164.1	16.63	6.73	4.87	162.78	1109.3	8.75	6.43
22	1.29	13.47	445.2	3.86	18.86	3.63	8.76	493.8	2.43	17.10
23	2.70	73.86	1124.3	10.21	7.11	2.95	34.94	1147.3	6.84	7.33
24	1.89	40.40	787.3	11.77	10.36	1.88	26.44	778.6	7.76	10.74
25	1.21	12.15	464.8	6.40	18.20	2.51	8.76	578.7	3.21	14.78
26	.45	32.19	536.6	2.46	15.08	1.06	4.63	770.0	1.16	11.37
27	2.24	52.56	868.5	14.51	9.26	2.43	43.19	900.5	9.71	9.09
28	1.14	14.81	475.8	4.65	17.66	3.42	8.85	577.0	2.73	14.75
29	2.17	47.74	1106.2	7.26	7.47	2.23	37.30	1150.6	4.48	7.30
30	2.03	43.84	816.5	11.72	9.95	2.01	54.85	771.9	7.24	10.27
31	1.60	12.56	565.9	6.14	15.02	2.66	6.41	588.4	3.31	14.62
32	.92	35.41	868.0	1.35	9.58	1.00	7.27	682.0	.96	12.74
BAG (CALC.)	1.55	36.84	699.0	8.33	11.65	2.52	32.45	736.3	5.14	11.16
BAG (ACT.)	1.57	37.54	699.0	7.58	11.63	2.53	32.89	736.3	4.95	11.15
33	.30	16.69	132.1	.06	55.70	.46	7.57	134.0	.06	60.23
34	3.41	183.59	1625.3	.75	4.61	4.47	68.17	1626.7	.92	5.08
35	1.82	98.08	802.5	.38	9.22	2.35	32.05	829.1	.46	10.01
36	1.14	56.70	598.2	.38	12.85	1.33	11.81	652.8	.55	13.14
37	.32	11.94	532.5	1.14	16.07	.95	2.80	500.9	1.64	17.46
38	.35	14.84	543.0	3.88	15.64	.77	7.18	577.6	1.68	15.01
39	.31	16.21	637.7	8.96	13.36	.95	22.20	653.9	5.75	12.83

EMISSION RESULTS IN GRAMS PER MILE (PER MINUTE FOR IDLE)
FUEL ECONOMY IN MILES PER GALLON (PER MINUTE FOR IDLE)

APPENDIX H

LISTING OF MODAL RESULTS ON INDIVIDUAL VEHICLES

CALIFORNIA

	VEH	YEAR	MAKE	MODL	CID	VEH	YEAR	MAKE	MODL	CID
	4097	1974	OLDS	CUTL	350	4098	1974	OLDS	CUTL	350
MODE NO.	HC	CO	CO2	NOXC	FUEL ECONOMY	HC	CO	CO2	NOXC	FUEL ECONOMY
1	8.69	135.66	1403.7	2.58	5.40	6.02	59.63	1388.5	11.70	5.91
2	1.28	5.04	538.4	.34	16.13	2.30	48.52	443.8	.65	16.83
3	15.28	131.22	1727.1	2.37	4.48	7.34	131.83	1511.1	2.68	5.10
4	3.09	9.26	1081.8	2.22	8.02	3.36	24.97	1001.6	4.62	8.44
5	4.02	63.31	851.8	2.15	9.21	2.29	15.39	782.4	6.13	10.90
6	4.80	3.55	358.9	.27	23.38	2.77	8.66	310.0	1.32	26.70
7	8.39	315.45	1028.8	1.57	5.72	6.45	145.28	918.1	7.94	7.61
8	4.89	2.97	515.7	.47	16.56	2.86	8.04	327.2	2.78	25.44
9	6.35	252.82	690.4	1.26	8.01	2.35	12.32	779.9	8.70	11.00
10	4.18	4.04	398.0	.37	21.25	3.48	11.17	291.9	1.62	27.70
11	9.24	392.53	904.8	1.12	5.72	3.81	50.42	997.7	13.04	8.15
12	5.65	6.12	447.9	.61	18.67	6.13	10.99	351.4	2.07	22.87
13	8.61	309.30	965.3	1.65	6.00	4.07	30.23	1029.2	12.89	8.15
14	4.29	4.10	448.9	.54	18.93	3.63	9.72	325.5	2.04	25.19
15	.84	5.29	625.7	.52	13.94	1.80	15.42	416.2	.85	19.89
16	2.59	9.42	1129.0	.72	7.70	4.03	59.78	1202.3	1.04	6.78
17	6.91	196.18	1021.2	2.14	6.57	3.37	25.78	1082.3	10.20	7.83
18	3.10	4.34	403.0	.33	21.15	2.63	13.77	328.7	1.34	24.74
19	4.25	104.45	994.8	2.32	7.57	2.97	25.34	936.8	6.21	9.00
20	4.50	6.18	454.1	.38	18.56	3.57	17.78	356.1	1.45	22.45
21	9.42	379.82	1032.5	1.54	5.35	4.86	126.14	1092.6	11.41	6.79
22	4.40	4.44	519.0	.50	16.44	4.60	13.61	378.6	2.41	21.41
23	6.11	22.48	1279.1	3.48	6.65	4.55	45.44	1200.8	7.80	6.90
24	4.91	169.00	670.2	1.32	9.33	2.17	13.67	679.9	6.58	12.53
25	3.80	5.69	530.4	.73	16.10	2.66	10.80	392.2	3.32	21.25
26	.88	9.88	731.2	.47	11.84	2.26	26.23	573.9	1.29	14.26
27	5.76	181.91	865.2	1.92	7.59	2.84	22.55	876.9	9.90	9.63
28	4.08	5.54	472.0	.61	17.98	4.49	14.09	433.8	2.59	18.88
29	3.83	13.99	1049.9	2.63	8.19	5.14	45.07	998.1	3.89	8.18
30	5.04	220.60	710.7	1.21	8.27	2.39	27.04	753.9	7.11	11.04
31	3.76	5.70	535.4	.86	15.95	2.34	10.94	405.4	3.94	20.64
32	1.09	5.16	644.4	.74	13.53	2.47	32.58	588.1	1.31	13.72
BAG (CALC.)	4.05	88.02	682.8	1.09	10.64	3.17	27.30	632.5	5.81	12.95
BAG (ACT.)	4.00	89.91	682.8	1.09	10.61	3.18	28.25	624.1	5.68	13.08
33	.31	2.86	119.1	.08	71.25	.53	7.61	101.7	.06	76.93
34	3.03	22.29	1431.1	.76	6.01	6.21	88.60	1257.8	.74	6.26
35	1.93	13.49	844.5	.48	10.18	2.22	38.29	917.6	.65	9.01
36	1.53	7.65	585.3	.38	14.74	1.72	26.13	587.8	.42	13.99
37	1.07	3.87	479.7	.58	18.14	1.51	19.26	415.7	.69	19.69
38	.78	3.66	517.3	.93	16.89	1.15	8.98	464.5	1.82	18.40
39	.55	4.08	586.0	1.62	14.94	1.30	9.59	529.6	4.82	16.17

EMISSION RESULTS IN GRAMS PER MILE (PER MINUTE FOR IDLE)
FUEL ECONOMY IN MILES PER GALLON (PER MINUTE FOR IDLE)

APPENDIX H

LISTING OF MODAL RESULTS ON INDIVIDUAL VEHICLES

CALIFORNIA

	VEH	YEAR	MAKE	MODL	CID	VEH	YEAR	MAKE	MODL	CID
	4099	1974	PLYM	SATE	318	4100	1974	PLYM	DUST	225
MODE NO.	HC	CO	CO2	NOXC	FUEL ECONOMY	HC	CO	CO2	NOXC	FUEL ECONOMY
1	8.04	66.60	1131.1	8.55	7.04	6.01	83.83	971.2	4.86	7.91
2	2.89	39.74	357.6	.68	20.68	2.25	83.72	277.8	.51	21.31
3	9.86	168.02	1474.9	4.68	5.01	9.12	142.12	1084.9	1.88	6.64
4	4.55	44.44	786.9	3.51	10.19	3.73	55.07	698.8	1.56	11.13
5	3.07	20.51	675.3	4.25	12.37	2.74	29.52	533.2	2.03	15.09
6	2.19	11.37	241.2	1.44	33.37	1.99	25.72	225.7	.40	32.58
7	4.64	25.67	918.5	10.83	9.12	4.32	95.02	700.2	6.79	10.28
8	2.92	9.57	341.6	1.44	24.25	2.69	17.96	205.2	.40	36.68
9	2.99	10.02	613.6	6.77	13.89	3.21	65.13	524.3	2.50	13.94
10	2.62	16.27	283.2	1.30	27.99	2.98	32.31	186.9	.37	35.91
11	4.44	25.81	921.0	10.71	9.10	4.66	101.48	656.2	5.92	10.69
12	3.59	21.76	307.6	1.61	25.13	3.89	46.24	206.7	.56	30.43
13	4.44	26.10	897.9	9.93	9.31	4.25	85.99	668.1	5.15	10.87
14	3.31	10.36	264.4	1.23	30.49	3.16	28.08	203.4	.42	34.46
15	2.13	19.21	334.9	.61	23.87	2.34	42.30	187.6	.61	33.94
16	4.62	135.51	559.8	.36	11.27	6.57	277.65	390.1	.36	10.48
17	5.15	38.82	946.1	7.72	8.67	4.42	76.73	694.7	3.61	10.70
18	3.37	16.01	286.9	1.32	27.50	2.60	31.29	204.9	.42	33.83
19	4.45	33.73	798.3	7.08	10.26	4.30	85.96	632.8	3.06	11.36
20	2.72	16.71	382.8	1.22	21.25	2.66	46.68	248.4	.46	26.88
21	5.75	50.24	1021.8	12.86	7.93	5.47	154.38	745.8	6.62	8.82
22	3.81	19.76	324.0	1.28	24.18	3.38	42.58	242.5	.45	27.72
23	6.59	63.72	1021.2	4.47	7.77	4.45	78.82	709.3	2.30	10.48
24	3.02	14.83	599.1	5.55	14.04	3.17	50.10	522.4	2.91	14.52
25	3.56	15.74	368.3	2.39	21.95	2.75	23.60	267.5	.52	28.32
26	3.57	24.37	639.0	1.30	12.89	3.39	65.55	313.2	.71	20.79
27	3.70	23.33	761.7	6.96	10.96	3.53	63.37	598.4	3.68	12.51
28	3.27	19.85	371.4	2.17	21.49	3.32	38.39	234.1	.45	29.11
29	5.30	68.03	758.0	2.62	10.07	4.34	79.12	702.7	1.65	10.56
30	3.32	19.24	604.8	5.62	13.75	3.96	92.34	518.9	2.88	13.12
31	3.29	9.84	365.1	2.71	22.70	3.28	26.19	261.0	.53	28.40
32	2.52	44.58	392.5	1.09	18.86	2.82	87.36	305.5	.75	19.65
BAG (CALC.)	3.28	24.26	568.4	4.11	14.39	3.07	55.18	417.6	1.98	17.27
BAG (ACT.)	3.23	23.58	554.3	3.91	14.75	3.05	54.18	417.6	1.84	17.32
33	.67	14.31	75.7	.05	88.47	.75	26.91	63.0	.05	82.46
34	7.91	170.44	909.4	.56	7.38	9.52	344.99	756.1	.55	6.68
35	3.94	82.82	491.1	.28	14.01	5.10	159.10	501.3	.36	11.56
36	2.45	36.17	477.8	.37	16.36	3.47	101.36	347.6	.24	17.14
37	2.38	15.41	334.4	1.50	24.24	2.55	38.59	239.9	.64	28.76
38	2.47	5.81	392.1	3.70	21.70	1.91	9.25	293.6	.79	28.25
39	2.56	7.58	451.5	5.08	18.82	2.06	15.58	365.1	1.06	22.41

EMISSION RESULTS IN GRAMS PER MILE (PER MINUTE FOR IDLE)
FUEL ECONOMY IN MILES PER GALLON (PER MINUTE FOR IDLE)

APPENDIX H

LISTING OF MODAL RESULTS ON INDIVIDUAL VEHICLES

CALIFORNIA

	VEH	YEAR	MAKE	MODL	CID	VEH	YEAR	MAKE	MODL	CID
	4101	1974	PONT	VENT	350	4102	1974	DATS	710	119
MODE NO.	HC	CO	CO2	NOXC	FUEL ECONOMY	HC	CO	CO2	NOXC	FUEL ECONOMY
1	3.06	78.01	1621.9	3.76	5.06	4.73	56.43	589.4	3.45	12.81
2	.93	32.43	478.8	.35	16.66	2.69	11.01	259.9	.70	31.06
3	4.52	124.61	1910.2	2.04	4.19	6.12	65.20	749.9	.70	10.18
4	1.57	30.62	1074.1	2.35	7.87	2.73	27.09	440.8	1.64	18.04
5	1.23	26.05	879.9	2.65	9.60	2.04	14.12	409.9	2.32	20.24
6	.47	9.12	431.9	.64	19.83	.87	6.16	188.1	.59	44.25
7	4.22	219.30	958.4	1.67	6.74	2.99	66.55	364.2	3.13	18.56
8	.69	7.31	521.5	1.11	16.59	1.30	11.06	226.8	2.31	35.75
9	1.05	31.04	857.7	2.93	9.76	1.54	16.14	401.4	3.18	20.56
10	.42	7.56	441.4	.62	19.52	1.91	11.81	188.8	1.18	41.58
11	2.77	144.40	1029.8	2.48	7.01	4.03	98.72	432.1	2.95	14.79
12	.63	11.95	480.2	.92	17.72	2.54	13.46	220.0	1.60	35.61
13	2.19	112.94	1086.1	2.68	6.99	4.02	94.39	417.4	3.24	15.34
14	.32	7.41	464.7	.91	18.59	1.80	10.77	215.0	1.37	37.35
15	.71	26.79	587.8	.33	14.04	2.11	9.78	276.5	.66	29.73
16	2.40	97.53	1134.1	.62	6.85	3.73	31.46	556.7	.70	14.36
17	1.67	54.42	1154.6	2.93	7.13	4.11	43.72	464.7	3.89	16.24
18	.54	11.56	464.6	.56	18.32	1.44	9.35	246.5	.66	33.39
19	1.20	34.20	1001.4	2.73	8.38	2.66	34.09	431.4	3.04	17.99
20	.52	19.91	494.0	.71	16.84	2.43	13.15	247.8	.69	32.14
21	3.88	216.06	1072.2	2.03	6.23	3.63	120.26	395.0	3.07	14.90
22	.52	13.30	485.1	.74	17.48	2.38	13.23	228.1	1.49	34.61
23	2.14	63.02	1395.9	2.80	5.91	3.88	37.82	474.0	2.40	16.26
24	1.60	70.60	797.0	1.70	9.72	1.52	24.38	386.0	2.34	20.68
25	.38	7.02	514.6	1.13	16.85	1.05	10.56	237.2	2.04	34.52
26	1.10	42.30	581.7	.49	13.62	2.96	14.50	247.6	.68	31.72
27	1.51	64.88	998.8	2.14	8.03	2.49	33.44	424.0	3.47	18.32
28	.42	10.90	540.4	.94	15.88	2.21	13.07	214.1	1.49	36.72
29	1.73	63.64	1192.2	1.42	6.84	3.29	35.94	489.0	1.12	15.97
30	2.84	137.13	784.6	1.22	8.80	1.78	37.33	355.2	2.82	21.16
31	.48	8.10	531.5	1.12	16.26	1.23	9.53	306.9	2.25	27.24
32	.98	42.08	710.3	.35	11.39	2.79	17.99	241.4	.55	31.86
BAG (CALC.)	1.16	47.31	749.8	1.45	10.72	2.63	32.56	315.6	2.11	23.66
BAG (ACT.)	1.20	46.19	752.6	1.51	10.71	2.65	33.81	307.1	1.94	24.07
33	1.35	41.62	85.4	.06	57.22	.64	4.21	40.7	.03	179.82
34	12.68	315.75	1212.2	.97	5.08	4.79	32.61	621.0	.38	12.91
35	5.64	146.84	926.4	.67	7.55	2.28	23.64	572.1	.57	14.40
36	3.81	93.33	591.6	.38	11.83	1.52	13.23	375.6	.43	22.12
37	2.38	26.69	421.2	.67	18.85	1.05	9.19	278.5	.80	29.95
38	1.67	10.25	529.2	1.25	16.12	1.07	9.38	268.7	.84	30.94
39	1.22	10.35	619.8	2.27	13.87	1.11	11.10	296.1	2.74	27.99

EMISSION RESULTS IN GRAMS PER MILE (PER MINUTE FOR IDLE)
FUEL ECONOMY IN MILES PER GALLON (PER MINUTE FOR IDLE)

APPENDIX H

LISTING OF MODAL RESULTS ON INDIVIDUAL VEHICLES

CALIFORNIA

	VEH	YEAR	MAKE	MODL	CID	VEH	YEAR	MAKE	MODL	CID
	4103	1974	TOYO	CORO	97	4104	1974	TOYO	CELI	120
MODE NO.	HC	CO	CO2	NOXC	FUEL ECONOMY	HC	CO	CO2	NOXC	FUEL ECONOMY
1	4.61	63.38	657.6	3.12	11.50	6.01	93.14	787.8	6.39	9.31
2	.08	4.43	491.6	.44	17.79	1.27	19.70	314.4	.36	25.40
3	.90	32.56	958.4	1.71	8.77	3.46	100.33	1127.9	4.86	6.85
4	.71	17.89	645.1	1.81	13.14	1.73	29.07	758.3	2.28	10.97
5	.78	9.21	452.7	2.73	18.90	1.30	15.11	591.2	1.97	14.34
6	.24	8.13	173.4	.93	47.48	1.32	6.86	142.7	.68	56.29
7	1.89	74.22	352.2	1.65	18.69	2.81	67.45	435.4	3.63	16.13
8	.20	5.00	228.7	1.68	37.41	.98	4.97	181.7	.69	46.07
9	1.14	26.39	351.6	4.19	22.38	1.99	70.73	395.7	1.18	17.30
10	.16	5.77	214.5	1.22	39.61	1.35	10.01	162.1	.47	48.73
11	3.40	126.47	436.9	2.43	13.73	3.58	108.90	511.2	3.43	12.80
12	.27	6.13	247.9	1.45	34.35	2.70	14.39	108.0	.51	63.77
13	3.88	108.44	420.3	2.15	14.72	3.61	97.91	572.8	4.16	12.02
14	.17	5.57	237.2	1.81	36.00	1.50	8.96	205.7	.48	39.53
15	.34	15.61	244.2	.35	32.90	1.06	28.94	186.0	.60	37.79
16	.28	18.43	919.8	.58	9.35	2.87	89.14	337.2	1.33	18.25
17	2.72	39.72	546.8	3.51	14.37	3.22	51.83	559.3	4.64	13.64
18	.29	6.05	249.7	1.05	34.12	1.33	12.02	188.3	.41	41.99
19	.60	18.64	490.2	2.47	17.02	2.58	47.93	581.8	3.27	13.34
20	.35	7.74	278.4	1.07	30.43	1.56	14.83	197.0	.70	39.40
21	4.05	146.31	412.6	1.31	13.54	4.22	88.19	502.3	3.79	13.57
22	.22	8.87	269.9	1.64	31.19	1.45	10.87	179.6	.46	44.09
23	2.91	36.24	543.5	2.11	14.56	2.35	37.75	804.0	1.85	10.19
24	.90	22.03	423.8	2.44	19.24	2.03	47.39	506.0	1.05	15.12
25	.20	6.67	253.3	1.95	33.57	2.02	6.43	184.2	1.62	44.22
26	.21	24.11	365.6	.34	21.96	1.22	39.15	216.8	1.29	31.45
27	1.67	31.47	459.0	3.59	17.28	2.40	51.20	524.9	2.25	14.48
28	.17	7.71	278.2	1.64	30.52	1.42	10.64	198.9	1.14	40.31
29	1.78	24.98	579.6	1.49	14.21	2.94	45.63	586.2	1.02	13.30
30	1.64	56.59	372.5	1.59	19.02	2.11	44.22	512.5	1.01	15.08
31	.16	7.29	216.2	1.97	38.89	1.55	5.55	190.7	2.61	43.44
32	.33	25.66	385.2	.33	20.81	.93	29.72	217.1	2.37	33.27
BAG (CALC.)	1.11	32.32	346.7	2.15	22.13	1.73	35.15	369.5	1.80	20.63
BAG (ACT.)	1.16	31.93	332.7	2.15	22.96	1.82	34.96	372.3	1.78	20.50
33	.23	4.31	34.6	.02	210.75	.34	8.19	31.4	.03	195.65
34	1.37	48.73	718.6	.36	11.10	2.85	43.45	715.8	.88	11.19
35	.07	9.22	879.5	.90	9.93	3.28	90.65	657.2	1.16	10.96
36	.10	7.46	460.1	.49	18.80	2.13	53.89	457.2	.95	16.18
37	.03	3.47	371.2	.67	23.56	.29	2.89	443.6	.89	19.77
38	.47	8.14	230.9	1.58	36.20	.52	2.44	304.2	1.56	28.66
39	.34	7.13	307.8	4.25	27.73	.35	2.12	324.9	4.89	26.95

EMISSION RESULTS IN GRAMS PER MILE (PER MINUTE FOR IDLE)
FUEL ECONOMY IN MILES PER GALLON (PER MINUTE FOR IDLE)

APPENDIX H

LISTING OF MODAL RESULTS ON INDIVIDUAL VEHICLES

CALIFORNIA

	VEH	YEAR	MAKE	MODL	CID	VEH	YEAR	MAKE	MODL	CID
	4105	1974	VOLK	SEDA	97	4106	1974	VOLK	SEDA	97
MODE NO.	HC	CO	CO2	NOXC	FUEL ECONOMY	HC	CO	CO2	NOXC	FUEL ECONOMY
1	9.35	94.55	532.0	5.13	12.50	17.80	173.39	491.3	3.94	10.82
2	1.03	14.69	220.2	1.11	35.99	.84	22.98	276.8	.65	28.12
3	9.28	226.61	719.4	1.64	8.03	26.43	218.84	647.1	.65	8.26
4	2.50	45.13	355.0	2.73	20.45	3.69	57.32	404.2	2.03	17.54
5	1.97	9.38	297.3	6.08	27.88	2.17	9.04	402.4	4.04	20.96
6	.34	1.88	165.7	1.49	52.29	.55	6.24	183.1	.80	45.59
7	1.06	24.48	281.5	6.54	27.45	1.35	38.33	248.9	3.23	28.32
8	1.09	9.01	233.9	3.58	35.28	.62	7.97	226.7	1.84	36.80
9	.66	5.00	345.6	9.51	24.96	.92	20.49	336.9	3.91	23.86
10	.56	10.25	181.7	2.43	44.47	1.15	8.39	167.8	1.28	48.07
11	3.45	40.34	383.7	7.86	19.38	4.17	52.72	312.5	3.84	21.72
12	1.27	14.75	164.2	2.77	46.36	1.18	8.32	181.0	1.47	44.88
13	4.74	51.26	381.5	7.19	18.60	6.01	60.11	343.9	4.13	19.40
14	.67	8.25	208.8	3.23	39.64	1.10	7.34	212.9	2.04	38.93
15	.84	15.75	162.6	.84	46.70	1.28	14.62	252.1	1.10	31.80
16	3.50	105.73	496.4	.24	13.18	3.23	102.69	448.2	0.00	14.32
17	5.49	47.52	386.0	7.67	18.56	8.51	73.85	406.0	4.61	16.16
18	.43	3.66	174.3	2.01	48.94	.93	3.96	207.4	1.15	40.98
19	2.88	31.41	360.4	6.13	21.19	4.22	53.26	354.6	3.60	19.65
20	.78	12.69	186.7	2.48	42.44	.65	9.51	224.8	1.03	36.70
21	5.55	45.87	305.6	6.65	22.45	8.17	72.36	323.2	3.27	19.18
22	1.07	13.94	200.1	3.45	39.38	1.31	16.36	225.2	1.64	34.79
23	5.61	88.89	436.8	3.93	14.93	15.58	129.15	315.1	2.98	15.64
24	1.56	11.36	335.6	7.50	24.76	1.65	13.55	302.5	3.93	26.98
25	.56	5.27	179.3	3.53	46.88	.95	6.98	261.0	3.05	32.27
26	1.45	23.82	241.6	1.62	31.30	1.44	41.86	253.6	.92	27.40
27	3.25	28.06	398.9	8.59	19.58	5.20	52.04	332.4	3.90	20.61
28	1.04	17.38	186.2	3.31	40.93	1.18	8.68	269.6	2.59	30.93
29	5.24	88.80	467.8	3.09	14.22	9.46	98.97	404.5	1.82	15.04
30	1.87	13.63	365.3	6.85	22.60	2.20	16.03	314.8	3.48	25.58
31	.74	6.96	207.9	4.14	40.13	1.15	40.83	397.9	3.10	19.06
32	1.46	26.42	218.3	1.02	33.56	2.00	31.65	287.3	1.73	25.84
BAG (CALC.)	1.97	25.97	284.4	4.94	26.78	3.01	37.51	287.4	2.71	24.94
BAG (ACT.)	2.06	25.84	287.2	4.77	26.55	3.13	37.60	290.2	2.74	24.71
33	.35	12.38	39.2	.03	148.43	.22	9.45	42.4	.03	153.17
34	4.20	163.88	471.3	.36	11.96	1.72	30.22	660.4	.75	12.44
35	2.34	51.00	516.5	.73	14.69	1.28	16.95	527.7	.83	15.90
36	1.30	30.48	325.6	.48	23.50	.95	9.42	332.5	.66	25.33
37	.75	5.27	253.4	1.79	33.61	.48	1.65	270.0	.63	32.38
38	.44	1.35	246.3	3.03	35.53	.53	1.94	240.7	1.42	36.16
39	.66	3.09	296.8	6.27	29.22	1.08	7.69	274.2	3.72	30.63

EMISSION RESULTS IN GRAMS PER MILE (PER MINUTE FOR IDLE)
FUEL ECONOMY IN MILES PER GALLON (PER MINUTE FOR IDLE)

APPENDIX H

LISTING OF MODAL RESULTS ON INDIVIDUAL VEHICLES

CALIFORNIA

	VEH	YEAR	MAKE	MODL	CID	VEH	YEAR	MAKE	MODL	CID
	3107	1973	AMC	HORN	258	3108	1973	BUIC	REGA	455
MODE NO.	HC	CO	CO2	NOXC	FUEL ECONOMY	HC	CO	CO2	NOXC	FUEL ECONOMY
1	7.36	80.76	859.5	14.02	8.79	5.46	62.45	1366.1	9.33	5.99
2	2.57	60.41	233.0	.89	26.41	1.95	25.65	627.0	2.11	13.18
3	7.50	194.30	754.1	5.62	8.19	7.71	119.82	1530.8	4.84	5.09
4	3.49	59.91	590.7	10.81	12.75	3.58	32.15	897.9	4.00	9.25
5	1.98	21.82	477.4	11.65	17.14	2.72	22.94	762.5	4.91	11.00
6	6.65	13.94	151.8	2.48	45.55	1.32	5.25	465.3	1.78	18.58
7	3.20	26.88	725.1	18.72	11.42	2.63	35.57	986.7	10.73	8.45
8	2.51	7.52	147.1	2.69	53.19	1.37	3.34	515.7	3.20	16.90
9	6.35	4.16	480.9	13.47	17.49	1.83	11.55	761.6	8.96	11.30
10	6.84	17.82	119.6	2.54	52.43	1.01	4.98	445.1	2.64	19.46
11	2.67	14.70	668.9	20.26	12.67	2.23	27.08	1034.3	11.67	8.19
12	6.46	23.85	106.5	2.16	53.96	1.14	4.33	476.0	2.67	18.25
13	2.36	17.67	649.9	18.10	12.95	2.37	23.24	1018.0	10.68	8.36
14	5.53	12.82	159.6	3.06	44.98	1.23	4.82	484.2	3.50	17.91
15	1.48	39.76	151.4	.92	40.61	1.98	6.37	678.9	2.71	12.77
16	9.43	210.79	317.1	.59	13.08	5.72	62.19	1161.4	2.69	6.95
17	3.20	31.55	644.3	14.32	12.61	3.64	34.51	1037.0	7.78	8.05
18	6.84	22.74	151.2	3.04	42.54	1.39	6.58	499.0	2.13	17.28
19	3.19	30.06	538.8	11.34	14.89	3.04	29.94	819.6	5.70	10.13
20	7.55	32.39	149.6	2.88	39.55	1.64	9.08	567.8	2.27	15.11
21	3.64	32.93	755.1	20.72	10.84	3.02	47.08	1111.2	11.16	7.43
22	6.77	23.61	162.2	3.36	40.20	1.73	7.81	542.1	3.66	15.85
23	4.44	77.64	701.0	10.76	10.60	5.30	51.07	1139.3	6.68	7.18
24	2.04	11.44	473.8	11.03	17.81	2.10	18.27	676.0	6.25	12.48
25	3.21	9.78	166.3	4.75	46.26	1.16	6.06	568.0	4.19	15.27
26	3.66	57.01	278.5	1.68	23.37	3.10	17.69	795.3	3.87	10.66
27	2.48	19.98	578.0	13.96	14.38	2.63	26.58	870.2	8.50	9.64
28	7.99	21.71	156.6	3.46	41.08	1.44	7.02	567.1	3.43	15.23
29	4.68	80.37	550.3	6.83	12.84	4.94	48.34	861.0	5.16	9.32
30	2.03	17.67	535.2	12.40	15.59	2.17	28.95	750.3	6.58	11.06
31	2.41	9.41	198.9	5.75	40.09	1.08	6.04	557.4	4.15	15.56
32	3.06	51.37	271.5	1.35	24.52	2.74	14.31	844.3	3.25	10.14
BAG (CALC.)	4.01	25.90	356.7	7.90	21.64	2.05	18.04	718.1	5.84	11.79
BAG (ACT.)	4.24	25.39	353.8	7.46	21.80	1.89	18.29	720.9	5.33	11.75
33	.97	23.00	44.4	.05	106.13	.39	9.50	146.9	.09	54.43
34	13.04	236.26	550.8	.56	9.21	7.22	118.72	1722.9	1.47	4.59
35	61.14	86.66	285.2	58.84	14.42	3.46	61.22	889.0	.64	8.91
36	33.36	68.36	221.8	.48	20.40	2.21	30.46	781.9	1.04	10.61
37	1.87	41.18	217.9	.64	30.76	1.76	3.43	519.1	1.34	16.74
38	11.38	16.42	263.6	4.89	27.26	1.39	4.33	563.4	2.89	15.45
39	13.49	4.97	290.7	6.81	26.00	.91	5.47	605.2	6.75	14.39

EMISSION RESULTS IN GRAMS PER MILE (PER MINUTE FOR IDLE)
FUEL ECONOMY IN MILES PER GALLON (PER MINUTE FOR IDLE)

APPENDIX H

LISTING OF MODAL RESULTS ON INDIVIDUAL VEHICLES

CALIFORNIA

	VEH	YEAR	MAKE	MODL	CID	VEH	YEAR	MAKE	MODL	CID
	3109	1973	BUIC	REGA	350	3110	1973	CADI	COUP	472
MODE NO.	HC	CO	CO2	NOXC	FUEL ECONOMY	HC	CO	CO2	NOXC	FUEL ECONOMY
1	3.22	18.31	1276.6	8.19	6.75	3.01	11.00	1614.1	10.98	5.41
2	.92	10.73	442.3	.46	19.21	.81	5.76	871.5	1.18	10.05
3	5.34	32.69	1630.6	2.22	5.22	3.31	18.31	1972.4	7.42	4.41
4	1.93	11.40	906.2	3.68	9.54	2.00	9.01	1116.0	5.77	7.81
5	1.63	9.28	711.3	5.15	12.14	1.22	5.93	969.3	6.28	9.03
6	.84	4.10	282.2	.73	30.47	.19	2.79	527.0	.76	16.68
7	3.02	134.55	811.5	4.61	8.60	2.81	36.03	1074.2	10.79	7.79
8	1.37	5.71	315.5	1.17	26.99	.14	2.09	594.8	1.65	14.83
9	1.11	11.54	705.4	6.01	12.21	.98	14.04	933.0	6.45	9.26
10	1.26	4.12	335.0	1.16	25.69	.16	2.82	496.2	1.13	17.71
11	1.42	31.14	911.5	8.09	9.20	2.13	23.19	1222.0	10.91	7.02
12	2.16	5.50	356.0	1.47	23.89	.21	3.38	581.8	1.60	15.10
13	1.49	20.76	894.1	7.79	9.53	1.94	18.94	1209.0	10.81	7.13
14	1.33	4.00	310.7	1.57	27.63	.11	3.00	571.0	1.45	15.41
15	1.29	3.46	584.4	.54	14.94	.48	6.87	631.3	1.41	13.79
16	1.78	28.31	911.4	.74	9.23	1.69	13.76	1594.7	2.52	5.47
17	2.12	16.30	898.3	6.63	9.54	1.92	9.54	1204.4	9.73	7.24
18	1.18	8.47	330.8	.70	25.51	.30	4.29	675.3	1.37	12.99
19	1.45	11.56	809.4	5.59	10.67	1.53	8.05	1014.1	7.16	8.60
20	1.10	7.87	426.9	.97	20.05	.44	6.49	774.2	1.85	11.30
21	2.09	90.92	1035.8	6.44	7.49	3.03	43.00	1304.3	11.05	6.42
22	1.45	6.39	399.7	1.72	21.42	.26	4.27	676.1	1.95	12.98
23	2.44	25.72	1018.5	5.13	8.32	2.09	14.29	1434.9	8.53	6.06
24	1.18	10.73	707.4	5.22	12.19	1.11	11.10	802.8	5.84	10.77
25	1.30	5.68	353.7	1.96	24.20	.14	2.88	617.1	1.60	14.27
26	1.02	6.86	578.2	.96	14.99	.63	9.30	949.3	1.58	9.19
27	1.40	12.54	798.7	6.71	10.79	1.50	12.68	1029.0	7.96	8.42
28	1.37	5.86	402.4	1.75	21.34	.22	4.83	703.2	1.65	12.48
29	2.73	17.79	916.6	2.91	9.31	1.90	13.56	1204.0	6.10	7.21
30	1.14	8.26	754.2	5.55	11.51	1.44	18.45	852.5	6.70	10.02
31	1.13	5.60	344.4	2.60	24.88	.19	3.15	650.9	1.94	13.52
32	1.15	6.72	472.6	.76	18.23	.77	8.28	819.0	1.25	10.64
BAG (CALC.)	1.34	16.23	577.9	3.48	14.61	.89	9.90	838.9	4.51	10.35
BAG (ACT.)	1.46	16.11	583.5	3.40	14.47	.93	9.86	849.9	4.23	10.22
33	.39	5.36	114.3	.08	71.60	.28	.70	166.4	.14	52.71
34	4.03	53.19	1388.0	.92	5.98	2.95	8.85	2036.6	1.56	4.31
35	1.34	21.25	852.6	.55	9.97	1.36	4.67	969.8	.67	9.04
36	1.05	13.77	562.1	.43	15.12	.83	3.62	764.8	.64	11.48
37	1.28	4.19	414.1	.43	20.90	.51	3.02	554.5	1.26	15.82
38	1.00	3.52	429.8	1.44	20.24	.28	3.11	632.7	1.55	13.90
39	.59	6.03	422.5	2.30	20.46	.16	3.35	706.8	2.86	12.46

EMISSION RESULTS IN GRAMS PER MILE (PER MINUTE FOR IDLE)
FUEL ECONOMY IN MILES PER GALLON (PER MINUTE FOR IDLE)

APPENDIX H

LISTING OF MODAL RESULTS ON INDIVIDUAL VEHICLES

CALIFORNIA

	VEH	YEAR	MAKE	MODL	CID	VEH	YEAR	MAKE	MODL	CID
	3111	1973	CHEV	VEGA	140	3112	1973	CHEV	MONT	350
MODE NO.	HC	CO	CO2	NOXC	FUEL ECONOMY	HC	CO	CO2	NOXC	FUEL ECONOMY
1	3.16	35.08	738.3	8.70	11.05	4.34	38.64	1126.1	10.66	7.39
2	1.04	29.34	135.3	.57	48.04	2.59	76.81	316.3	.27	19.93
3	3.62	75.35	612.8	6.65	11.95	5.19	74.40	1355.3	2.70	5.96
4	1.78	17.21	496.5	5.25	16.77	2.90	18.81	783.0	3.92	10.80
5	1.53	11.69	463.7	5.52	18.23	2.16	13.84	631.6	6.89	13.44
6	.54	11.92	133.3	.50	57.71	2.16	13.22	236.4	.57	33.62
7	2.55	53.60	592.5	7.43	12.96	4.96	200.41	680.9	5.58	8.77
8	1.07	10.80	107.7	.63	69.32	2.73	12.14	324.5	.75	25.20
9	1.40	22.42	479.0	4.77	17.11	1.73	17.26	625.6	9.43	13.48
10	.75	14.82	130.2	.43	56.94	2.92	18.32	242.8	.72	31.60
11	1.52	37.23	564.4	6.01	14.14	2.87	49.16	742.4	9.93	10.71
12	1.44	21.34	80.6	.38	74.75	4.27	30.71	260.6	.94	27.53
13	1.92	38.60	566.9	6.75	14.01	2.72	39.11	784.4	10.23	10.39
14	1.05	13.86	110.3	.60	65.57	2.74	16.57	253.9	1.35	30.75
15	.96	34.43	105.6	.52	54.54	.97	11.97	352.9	.35	23.68
16	1.75	74.23	265.8	.66	22.88	2.03	0.00	769.7	0.00	11.44
17	2.38	27.74	613.3	7.19	13.36	2.56	14.98	848.4	10.17	10.09
18	.88	19.27	90.0	.27	72.10	2.83	23.89	304.5	.81	25.28
19	1.73	20.19	565.3	7.39	14.73	2.00	8.50	727.8	8.49	11.87
20	.84	26.71	110.4	.45	57.27	3.23	30.24	316.2	.59	23.73
21	2.21	60.87	680.7	7.64	11.33	5.39	73.81	739.1	5.49	10.18
22	1.26	19.37	97.1	.43	67.45	4.28	27.00	287.0	.85	25.87
23	2.31	42.20	615.9	7.87	12.87	3.74	29.47	975.3	6.95	8.59
24	1.51	26.15	488.9	4.80	16.60	1.72	12.56	581.3	7.77	14.63
25	1.28	11.24	91.5	1.67	78.40	2.62	11.53	319.1	1.57	25.69
26	1.53	54.81	111.9	1.56	43.74	1.38	28.25	545.4	.45	14.94
27	1.53	21.40	534.0	5.45	15.50	1.94	11.20	681.2	9.61	12.59
28	1.00	21.46	116.5	1.04	57.85	3.15	21.55	378.0	1.33	21.04
29	2.53	37.39	530.0	5.48	14.87	3.02	25.07	737.8	3.72	11.28
30	1.73	45.88	524.8	5.63	14.73	1.71	16.72	562.4	8.05	14.94
31	1.52	14.29	80.6	1.20	82.25	1.74	14.91	321.4	2.07	25.34
32	1.35	49.70	126.3	.79	42.53	1.24	19.93	542.8	.55	15.35
BAG (CALC.)	1.31	23.29	311.8	3.21	25.18	2.40	31.69	502.5	3.87	15.85
BAG (ACT.)	1.41	21.33	323.0	3.19	24.59	2.35	32.87	502.5	3.76	15.80
33	.38	7.51	47.4	.06	146.90	.44	9.84	100.6	.06	75.55
34	4.70	83.00	605.8	.69	11.82	4.63	84.27	1244.6	.74	6.38
35	2.41	35.43	303.1	.34	24.22	1.28	35.34	733.3	.37	11.19
36	1.51	15.89	283.7	.52	28.32	1.03	28.44	502.0	.25	16.14
37	1.20	8.28	220.6	2.05	37.38	1.43	15.36	375.5	.37	21.96
38	.79	1.51	253.4	1.77	34.36	.95	3.07	402.7	1.27	21.62
39	.62	1.83	292.2	3.61	29.88	.59	3.80	467.9	3.12	18.66

EMISSION RESULTS IN GRAMS PER MILE (PER MINUTE FOR IDLE)
FUEL ECONOMY IN MILES PER GALLON (PER MINUTE FOR IDLE)

APPENDIX H

LISTING OF MODAL RESULTS ON INDIVIDUAL VEHICLES

CALIFORNIA

	VEH	YEAR	MAKE	MODL	CID	VEH	YEAR	MAKE	MODL	CID
	3113	1973	CHEV	NOVA	350	3114	1973	CHEV	IMPA	350
MODE NO.	HC	CO	CO2	NOXC	FUEL ECONOMY	HC	CO	CO2	NOXC	FUEL ECONOMY
1	3.10	60.38	1175.4	9.46	6.93	3.45	32.67	1371.1	13.43	6.19
2	3.35	106.53	287.8	.11	19.05	.66	14.54	414.8	.68	20.18
3	2.53	183.63	1205.3	.81	5.91	5.28	63.74	1632.5	3.95	5.07
4	1.81	44.86	814.2	3.68	9.97	2.11	17.25	931.4	6.07	9.19
5	1.32	16.60	680.8	6.26	12.48	1.88	14.13	749.2	8.14	11.42
6	.21	6.43	293.8	.22	29.14	1.03	4.13	260.4	1.04	32.85
7	2.14	47.03	799.8	9.47	10.08	3.45	267.82	880.7	3.71	6.76
8	6.61	43.56	191.8	.85	31.56	1.94	4.45	272.3	1.83	31.10
9	1.18	20.73	629.3	7.67	13.33	2.38	141.66	721.1	5.42	9.33
10	5.40	32.69	241.9	.57	28.59	.84	5.27	252.1	1.19	33.74
11	1.69	33.27	811.1	9.26	10.22	4.19	210.81	816.7	4.94	7.64
12	8.90	66.58	189.2	.46	27.56	1.47	6.68	309.5	1.64	27.34
13	1.81	34.62	806.4	9.68	10.24	3.42	155.48	893.3	7.01	7.73
14	6.74	53.93	238.8	.70	25.73	.82	5.57	269.2	1.38	31.63
15	0.00	21.28	369.1	.16	22.05	.44	16.78	306.7	.69	26.53
16	0.00	65.42	881.0	.23	9.02	1.22	27.10	672.4	.48	12.35
17	2.03	37.66	841.9	8.31	9.78	3.13	74.42	996.9	10.12	7.90
18	6.29	79.79	174.4	.32	27.76	.62	7.82	301.4	.63	28.12
19	1.90	31.09	848.3	8.07	9.83	2.25	35.43	966.3	10.21	8.62
20	6.03	86.97	255.1	.18	21.60	.68	8.57	351.8	.88	24.16
21	2.66	63.38	887.3	9.70	8.92	4.53	271.80	1025.9	4.11	6.05
22	7.59	73.28	238.9	.57	23.47	1.34	7.65	298.0	1.25	28.24
23	4.38	122.22	919.1	4.80	7.89	2.64	30.10	1167.5	7.60	7.26
24	1.83	29.49	663.9	7.17	12.39	2.57	120.24	721.1	5.50	9.67
25	5.89	19.42	248.6	1.18	29.80	1.03	4.37	273.0	1.77	31.35
26	1.12	33.89	646.5	.23	12.62	.91	22.68	403.5	.76	20.08
27	1.59	28.33	744.4	7.82	11.18	2.44	75.73	895.8	8.17	8.68
28	4.85	45.35	319.1	.81	21.88	1.38	5.85	311.8	1.39	27.28
29	2.14	58.77	869.4	3.92	9.16	2.30	30.08	1112.7	6.95	7.60
30	1.31	26.31	617.7	7.52	13.38	2.55	163.52	839.7	4.58	8.03
31	6.23	30.62	241.9	.94	28.65	1.13	5.50	244.5	2.12	34.57
32	.48	31.07	555.8	.22	14.64	.47	26.99	467.5	.57	17.35
BAG (CALC.)	2.81	43.38	519.8	3.55	14.87	1.64	52.14	578.7	3.74	13.33
BAG (ACT.)	2.89	46.64	525.5	3.55	14.60	1.69	50.72	581.5	3.63	13.31
33	.28	15.14	105.4	.03	68.24	.39	4.59	96.8	.08	84.28
34	2.98	155.83	1339.0	.55	5.57	3.73	46.78	1201.4	.80	6.90
35	.72	55.99	986.5	.36	8.24	1.16	28.99	823.9	.59	10.16
36	.56	40.39	620.7	.24	12.94	.95	28.90	543.7	.39	14.99
37	.50	26.97	412.9	.27	19.43	1.17	14.95	389.8	1.23	21.28
38	.26	14.42	429.2	.83	19.61	.74	2.79	440.3	2.15	19.85
39	.21	7.35	496.9	3.37	17.44	.43	3.14	500.8	3.82	17.50

EMISSION RESULTS IN GRAMS PER MILE (PER MINUTE FOR IDLE)
FUEL ECONOMY IN MILES PER GALLON (PER MINUTE FOR IDLE)

APPENDIX H

LISTING OF MODAL RESULTS ON INDIVIDUAL VEHICLES

CALIFORNIA

	VEH	YEAR	MAKE	MODL	CID	VEH	YEAR	MAKE	MODL	CID
	3115	1973	CHEV	CAPR	400	3116	1973	DODG	DART	225
MODE NO.	HC	CO	CO2	NOXC	FUEL ECONOMY	HC	CO	CO2	NOXC	FUEL ECONOMY
1	2.62	35.18	1311.1	7.17	6.46	3.46	32.15	915.4	.94	9.09
2	1.65	6.19	471.7	.52	18.24	1.17	4.58	270.4	3.05	31.54
3	3.83	28.83	949.6	3.93	8.81	3.40	12.41	1028.1	.79	8.39
4	1.65	19.00	955.7	4.91	8.96	2.09	8.90	622.9	1.20	13.79
5	.88	9.13	683.8	5.04	12.66	1.89	7.00	578.6	4.38	14.90
6	3.25	4.49	268.5	.86	31.04	1.51	2.76	145.7	7.36	57.33
7	2.14	46.09	850.5	3.08	9.55	3.08	62.50	750.7	6.21	10.34
8	2.79	6.98	354.6	1.85	23.70	1.50	3.37	156.9	12.28	53.15
9	.86	25.26	787.8	6.24	10.69	1.89	11.41	622.2	7.42	13.74
10	3.09	4.13	326.6	1.21	25.88	1.54	3.47	176.7	8.14	47.46
11	1.16	53.14	1001.2	6.19	8.15	2.86	42.61	705.3	8.79	11.36
12	4.45	7.28	347.5	1.28	23.79	1.91	3.54	138.9	10.49	58.97
13	1.13	46.30	1033.0	6.67	8.00	2.26	22.88	738.4	10.86	11.36
14	2.74	4.62	399.2	1.82	21.38	1.39	3.09	180.4	8.94	46.79
15	.58	12.42	483.9	.29	17.56	1.02	4.69	182.5	1.77	45.95
16	0.00	46.78	1172.9	0.00	7.12	1.41	15.85	506.8	1.95	16.55
17	1.21	23.59	1029.7	6.73	8.29	2.66	12.75	757.1	9.02	11.30
18	1.61	6.20	418.4	.92	20.49	1.71	1.98	144.0	6.29	58.20
19	1.04	27.54	875.3	4.96	9.63	3.15	11.60	688.5	4.55	12.38
20	1.93	10.42	490.2	1.17	17.31	2.12	3.04	171.1	6.57	48.61
21	2.60	164.46	1067.7	3.95	6.65	3.51	84.76	799.0	5.74	9.41
22	2.62	6.48	435.0	1.76	19.57	1.79	4.09	177.5	9.45	46.81
23	1.68	47.24	935.3	5.21	8.75	4.40	20.84	807.2	3.33	10.39
24	.72	19.47	780.9	4.80	10.91	1.75	7.93	607.7	10.45	14.18
25	1.83	5.86	407.5	2.32	21.01	1.66	4.05	159.1	8.55	51.99
26	2.42	30.61	616.6	1.14	13.20	1.24	4.93	235.1	11.38	35.97
27	.91	25.01	923.2	5.91	9.19	1.74	9.10	662.8	1.31	13.00
28	1.81	5.87	432.3	2.21	19.85	1.51	4.33	202.5	8.16	41.46
29	1.68	36.68	826.4	3.68	9.98	4.07	24.12	715.7	3.72	11.58
30	.74	32.38	831.7	4.39	10.03	2.03	18.52	655.7	10.03	12.84
31	1.54	6.40	438.1	2.51	19.59	1.80	3.52	139.0	11.09	59.06
32	.73	15.32	551.4	.59	15.36	.97	5.86	246.4	1.96	34.31
BAG (CALC.)	1.47	25.42	646.1	3.36	12.85	1.67	12.29	429.8	9.34	19.53
BAG (ACT.)	1.50	23.80	640.7	3.24	13.00	1.66	11.25	413.0	8.80	20.36
33	.30	1.08	128.1	.06	67.90	.25	2.12	61.3	.13	135.70
34	3.14	7.37	1162.7	.77	7.49	2.50	19.87	774.3	1.22	10.91
35	.95	26.67	897.4	.58	9.42	.98	2.57	442.6	.88	19.74
36	.67	18.65	579.5	.39	14.53	.97	1.71	314.4	.77	27.72
37	.58	9.47	463.8	.45	18.47	1.27	2.13	282.6	2.14	30.61
38	.54	8.78	486.7	1.77	17.67	.90	3.87	319.1	6.11	27.06
39	.31	5.01	548.9	4.16	15.91	.84	8.53	425.8	12.38	20.08

EMISSION RESULTS IN GRAMS PER MILE (PER MINUTE FOR IDLE)
FUEL ECONOMY IN MILES PER GALLON (PER MINUTE FOR IDLE)

APPENDIX H

LISTING OF MODAL RESULTS ON INDIVIDUAL VEHICLES

CALIFORNIA

	VEH	YEAR	MAKE	MODL	CID	VEH	YEAR	MAKE	MODL	CID
	3117	1973	FORD	PINT	122	3118	1973	FORD	TORI	351
MODE NO.	HC	CO	CO2	NOXC	FUEL ECONOMY	HC	CO	CO2	NOXC	FUEL ECONOMY
1	3.79	89.87	584.5	6.47	12.03	2.81	20.46	1472.1	6.16	5.87
2	1.92	23.48	194.0	1.89	37.46	2.27	28.03	470.2	.73	17.02
3	4.10	87.19	525.8	.56	13.13	2.77	51.58	1794.7	1.75	4.71
4	2.09	37.05	428.5	4.89	17.99	1.89	20.16	1010.8	3.26	8.47
5	1.40	23.03	388.7	7.56	20.67	1.02	5.11	797.5	4.82	10.97
6	.75	6.13	172.4	3.61	48.13	2.34	6.08	350.7	2.07	24.14
7	2.03	52.19	357.1	4.61	19.92	1.14	8.53	1063.0	8.64	8.22
8	.69	4.94	201.2	6.63	42.03	1.66	6.90	297.2	3.11	28.32
9	1.37	33.90	363.7	8.01	21.07	.63	4.80	848.7	5.77	10.34
10	.91	10.06	183.5	4.65	43.90	4.99	10.36	302.6	2.09	26.52
11	2.81	79.59	433.7	5.36	15.64	1.17	9.05	1026.8	9.83	8.50
12	1.23	10.14	208.0	4.60	38.96	5.58	12.95	355.9	1.92	22.53
13	2.98	84.15	413.4	5.23	15.99	1.21	8.60	951.0	8.97	9.17
14	.92	8.78	186.6	5.38	43.66	2.97	8.74	442.0	1.96	19.08
15	1.43	31.68	164.3	.97	40.60	.61	6.30	479.3	.92	18.07
16	2.15	75.10	232.4	0.00	24.84	3.17	81.58	1067.0	.60	7.36
17	2.91	82.68	409.8	5.65	16.17	1.50	15.90	1011.1	7.27	8.53
18	.98	7.47	185.1	3.76	44.38	2.89	11.96	390.3	1.39	21.22
19	2.02	45.55	410.7	5.35	18.16	1.54	16.91	903.6	4.64	9.49
20	1.32	10.17	203.9	4.20	39.61	5.09	13.73	494.7	1.91	16.67
21	3.30	86.38	368.4	3.96	17.25	1.16	11.50	1105.6	10.13	7.87
22	1.18	11.59	213.3	5.70	37.72	4.57	12.73	465.6	2.33	17.75
23	2.74	45.02	462.3	2.64	16.39	2.36	24.45	1107.6	3.78	7.69
24	1.36	33.92	324.4	6.46	23.23	.85	3.97	758.5	5.44	11.56
25	.83	5.05	247.4	7.31	34.40	1.75	6.54	418.7	4.57	20.43
26	2.08	49.86	250.0	1.14	26.50	1.20	9.73	834.6	1.74	10.40
27	2.08	63.41	358.1	6.85	19.11	1.00	11.57	849.8	3.22	10.19
28	1.09	11.50	224.5	5.49	36.08	4.23	13.04	443.5	2.74	18.59
29	2.23	39.72	364.9	3.73	20.43	2.44	38.17	958.3	2.20	8.65
30	1.45	31.81	320.1	5.38	23.69	.82	4.89	770.4	5.22	11.37
31	.91	4.83	263.0	8.81	32.46	.97	5.53	466.2	5.13	18.57
32	1.95	45.60	214.7	1.36	30.34	1.33	13.41	671.5	1.36	12.74
BAG (CALC.)	1.65	33.41	298.6	5.84	24.91	2.10	10.99	675.2	4.66	12.69
BAG (ACT.)	1.64	33.55	290.1	5.56	25.51	2.21	11.91	672.4	4.46	12.71
33	.34	6.16	31.6	.02	209.30	.48	7.33	117.8	.08	67.85
34	4.25	70.54	380.8	.19	17.57	9.96	77.18	1434.5	.95	5.59
35	3.86	57.46	428.6	1.32	16.71	2.93	37.16	724.9	.47	11.20
36	2.13	35.31	259.9	.83	27.55	2.00	32.00	571.5	.38	14.13
37	1.36	21.53	237.8	3.30	32.17	1.11	3.12	432.6	1.19	20.12
38	.85	3.99	234.3	6.24	36.48	1.48	3.13	453.4	3.79	19.17
39	.76	3.89	295.7	9.08	29.17	1.65	5.40	527.3	9.14	16.40

EMISSION RESULTS IN GRAMS PER MILE (PER MINUTE FOR IDLE)
FUEL ECONOMY IN MILES PER GALLON (PER MINUTE FOR IDLE)

APPENDIX H

LISTING OF MODAL RESULTS ON INDIVIDUAL VEHICLES

CALIFORNIA

	VEH	YEAR	MAKE	MODL	CID	VEH	YEAR	MAKE	MODL	CID
	3119	1973	FORD	MAVE	302	3120	1973	FORD	STAW	429
MODE NO.	HC	CO	CO2	NOXC	FUEL ECONOMY	HC	CO	CO2	NOXC	FUEL ECONOMY
1	6.50	16.41	917.1	4.79	9.21	7.57	132.09	1524.9	23.68	5.05
2	1.91	11.20	505.2	.17	16.78	2.97	82.53	607.0	.96	11.90
3	7.25	5.58	1013.9	1.13	8.49	9.87	296.50	1564.7	9.48	4.30
4	2.86	9.69	750.3	2.36	11.46	5.62	98.66	824.3	12.17	8.90
5	3.04	8.72	646.0	3.86	13.26	3.91	53.84	882.9	14.61	9.06
6	1.90	3.52	447.7	.44	19.33	2.76	33.53	310.3	1.71	23.87
7	3.71	8.80	749.7	9.84	11.45	3.93	37.79	989.6	25.56	8.36
8	1.84	3.45	358.1	1.09	24.03	5.42	36.02	316.7	2.91	22.73
9	3.08	5.88	605.6	7.23	14.21	4.01	30.83	752.3	20.69	10.91
10	2.64	6.14	363.6	.62	23.25	6.23	38.04	287.6	1.89	24.17
11	4.03	14.65	657.3	8.94	12.81	4.43	51.21	1132.3	24.84	7.23
12	4.25	8.12	354.2	.87	23.33	5.68	50.03	302.1	1.89	22.26
13	4.33	13.59	713.0	8.29	11.86	4.53	61.22	1068.0	23.35	7.53
14	3.27	6.54	359.4	1.32	23.35	5.63	36.94	405.8	3.66	18.42
15	1.38	6.51	517.2	.64	16.69	2.19	87.17	303.7	.53	19.83
16	4.95	62.19	889.9	.24	8.85	6.51	293.40	819.4	1.21	6.82
17	4.63	17.13	760.7	5.12	11.06	4.78	86.02	1103.2	18.95	7.08
18	3.33	6.56	394.4	.74	21.37	2.46	50.07	374.0	2.59	19.27
19	5.06	2.70	643.0	3.62	13.38	4.70	82.98	959.4	15.29	8.03
20	3.04	5.27	496.1	.67	17.27	4.40	66.60	405.9	2.17	16.92
21	4.51	2.21	776.1	9.46	11.18	4.62	53.86	1134.6	24.92	7.19
22	3.83	9.45	406.2	1.33	20.49	6.06	52.81	323.8	3.20	20.83
23	5.62	51.56	677.4	2.81	11.43	7.46	160.64	1281.9	14.65	5.70
24	3.28	6.20	537.0	4.26	15.93	3.30	51.78	786.6	14.51	10.10
25	3.00	6.69	416.0	1.89	20.36	4.82	38.63	428.4	3.83	17.60
26	2.14	3.76	708.3	.64	12.31	3.50	98.30	580.5	.71	11.90
27	4.03	9.85	620.9	6.03	13.67	4.16	66.77	964.3	18.68	8.20
28	3.64	7.36	433.8	1.44	19.43	7.38	52.63	384.6	3.17	18.09
29	4.53	28.55	665.5	1.72	12.25	6.00	151.54	957.2	10.53	7.31
30	3.37	7.30	512.4	4.26	16.60	2.95	49.15	832.5	16.66	9.66
31	3.09	5.37	453.6	1.19	18.81	4.43	37.89	424.0	4.47	17.84
32	1.53	10.28	656.4	.57	13.10	3.25	101.56	497.4	.75	13.30
BAG (CALC.)	3.09	10.92	540.2	3.52	15.65	4.11	60.97	655.6	9.64	11.61
BAG (ACT.)	3.05	11.85	520.6	3.41	16.17	4.01	60.97	658.4	9.21	11.57
33	.64	8.49	105.3	.03	73.54	.97	35.20	106.7	.06	53.75
34	7.72	118.06	1170.8	.56	6.43	10.59	356.29	1376.1	.75	4.51
35	3.59	51.93	612.4	.28	12.58	5.24	175.26	687.5	.39	9.06
36	1.43	7.57	615.8	.36	14.04	3.49	115.03	464.7	.25	13.52
37	.64	2.81	455.3	.53	19.22	2.14	46.26	416.9	.73	17.88
38	.63	3.66	469.5	1.08	18.60	3.49	27.42	465.4	4.68	17.08
39	1.73	7.39	432.0	2.32	19.76	2.27	42.33	538.2	7.50	14.50

EMISSION RESULTS IN GRAMS PER MILE (PER MINUTE FOR IDLE)
FUEL ECONOMY IN MILES PER GALLON (PER MINUTE FOR IDLE)

APPENDIX H

LISTING OF MODAL RESULTS ON INDIVIDUAL VEHICLES

CALIFORNIA

	VEH	YEAR	MAKE	MODL	CID	VEH	YEAR	MAKE	MODL	CID
	3121	1973	FORD	TORI	351	3122	1973	MERC	MONT	400
MODE NO.	HC	CO	CO2	NOXC	FUEL ECONOMY	HC	CO	CO2	NOXC	FUEL ECONOMY
1	6.10	68.74	1067.1	4.33	7.43	4.16	40.76	1314.3	23.41	6.38
2	1.44	33.25	444.2	.69	17.72	.84	11.03	545.8	.88	15.69
3	6.04	91.52	1144.2	2.21	6.79	3.93	25.80	1452.1	10.50	5.90
4	3.37	51.48	790.0	2.48	10.07	2.56	18.39	906.7	14.36	9.40
5	3.38	25.96	610.0	4.15	13.42	2.23	23.46	764.8	14.84	10.98
6	2.64	15.25	284.5	2.86	28.01	2.06	4.99	263.9	1.92	31.89
7	3.35	27.55	841.3	10.22	9.91	3.57	82.78	889.2	14.45	8.61
8	2.77	22.28	411.2	1.39	19.51	3.09	8.58	304.4	3.05	27.09
9	3.29	22.57	561.9	6.63	14.60	1.70	13.53	662.5	14.42	12.88
10	3.18	20.79	321.9	1.82	24.34	3.65	10.38	288.0	2.30	28.10
11	3.68	27.30	854.7	10.61	9.76	2.64	40.80	937.7	19.36	8.79
12	3.77	31.45	356.5	1.41	21.24	5.46	14.11	308.0	2.54	25.54
13	3.82	30.77	797.1	8.72	10.35	2.37	24.35	981.6	20.09	8.64
14	3.64	22.62	358.6	2.28	21.88	3.47	12.46	334.4	3.37	24.32
15	1.77	30.59	401.8	1.24	19.49	.67	10.20	417.2	.63	20.38
16	2.92	28.99	817.0	1.22	10.18	3.19	23.01	783.4	0.00	10.70
17	4.17	44.67	775.1	3.98	10.34	3.14	35.99	938.7	17.51	8.83
18	2.08	18.73	391.0	2.71	20.78	2.15	9.99	350.5	2.39	23.79
19	2.98	30.79	580.9	3.21	13.90	2.56	26.71	785.9	17.33	10.62
20	3.15	21.23	457.2	2.12	17.73	2.58	11.85	444.3	2.07	18.84
21	3.33	26.28	841.9	12.48	9.93	3.54	89.40	1014.1	15.77	7.61
22	3.67	26.94	428.9	1.86	18.38	4.47	13.84	354.7	3.69	22.72
23	3.78	42.29	697.8	2.64	11.43	3.79	37.34	1013.1	18.12	8.19
24	2.49	23.79	536.4	3.28	15.26	1.57	17.67	677.7	14.20	12.49
25	2.92	26.72	464.2	2.99	17.22	3.17	13.45	365.5	4.25	22.38
26	2.08	44.57	748.4	1.19	10.76	1.28	13.48	528.3	1.37	16.03
27	3.55	29.96	674.8	5.90	12.11	2.15	22.92	834.9	16.63	10.11
28	3.76	26.48	431.7	2.56	18.29	3.40	14.69	371.2	3.15	21.91
29	3.37	58.94	552.0	1.94	13.54	2.90	33.18	979.5	13.40	8.53
30	2.39	21.37	509.2	3.72	16.13	1.76	18.11	741.2	15.20	11.45
31	2.09	28.75	515.2	2.03	15.65	3.04	13.21	408.5	4.78	20.22
32	2.26	41.75	556.0	.58	14.12	1.09	15.43	560.9	.84	15.08
BAG (CALC.)	3.09	30.33	573.5	4.05	14.07	2.37	20.98	597.7	8.82	13.91
BAG (ACT.)	3.12	29.36	576.4	3.79	14.03	2.41	20.61	600.5	8.14	13.86
33	.69	3.43	87.0	.05	93.86	.36	2.41	110.0	.09	77.24
34	5.33	35.63	1103.4	.57	7.55	3.22	11.97	1339.5	.90	6.49
35	1.89	15.64	655.4	.38	12.94	1.90	5.79	677.2	.54	12.82
36	.50	2.85	651.6	.56	13.50	.96	4.34	539.1	.56	16.17
37	1.59	19.52	399.0	.97	20.42	.73	2.73	451.7	1.34	19.37
38	2.37	16.85	424.4	6.23	19.36	.89	4.38	455.7	4.57	19.07
39	2.85	39.50	476.7	3.07	16.20	1.23	18.62	504.4	7.66	16.51

EMISSION RESULTS IN GRAMS PER MILE (PER MINUTE FOR IDLE)
FUEL ECONOMY IN MILES PER GALLON (PER MINUTE FOR IDLE)

APPENDIX H

LISTING OF MODAL RESULTS ON INDIVIDUAL VEHICLES

CALIFORNIA

	VEH	YEAR	MAKE	MODL	CID	VEH	YEAR	MAKE	MODL	CID
	3123	1973	OLDS	STAW	455	3124	1973	OLDS	CUTL	350
MODE NO.	HC	CO	CO2	NOXC	FUEL ECONOMY	HC	CO	CO2	NOXC	FUEL ECONOMY
1	3.80	70.84	1434.1	11.55	5.70	3.89	19.21	1221.4	21.37	7.02
2	1.73	74.05	575.4	.79	12.73	2.99	32.87	379.8	1.53	20.13
3	6.35	161.17	1468.2	4.77	5.10	6.33	93.54	1317.5	12.62	5.98
4	2.27	47.52	1022.6	5.23	8.04	3.21	36.28	770.6	11.21	10.59
5	1.56	22.76	924.9	6.26	9.19	1.78	9.01	701.8	15.63	12.30
6	2.33	17.59	479.7	.64	17.24	3.25	6.53	239.8	1.14	34.08
7	3.17	75.50	927.8	14.37	8.40	2.10	7.29	871.7	17.22	9.98
8	3.21	12.56	551.4	1.47	15.27	3.16	6.50	255.0	2.58	32.25
9	1.77	12.23	901.5	8.78	9.58	1.29	3.07	690.9	15.34	12.68
10	3.25	20.78	458.6	.86	17.70	3.85	10.38	248.9	1.94	32.00
11	2.29	18.68	1209.5	14.94	7.12	2.16	8.99	878.8	20.23	9.86
12	4.59	25.35	569.6	1.03	14.22	5.39	9.49	264.3	1.48	29.96
13	2.42	22.43	1191.6	13.20	7.19	2.12	10.10	861.5	19.06	10.04
14	2.91	16.71	560.5	1.22	14.89	3.82	6.71	266.2	2.30	30.73
15	1.68	64.40	521.7	.65	14.13	1.38	22.11	305.5	.73	25.75
16	3.70	141.11	1066.4	.37	6.83	3.51	89.12	705.9	0.00	10.36
17	2.60	37.96	1267.8	9.49	6.64	2.97	14.86	805.2	19.77	10.59
18	2.09	29.28	609.2	.57	13.41	3.19	13.60	300.2	2.17	26.76
19	2.11	33.00	937.9	7.47	8.91	2.30	15.91	734.0	15.93	11.58
20	2.07	39.39	660.4	.80	12.18	3.06	13.97	331.6	1.53	24.43
21	2.42	37.19	1234.5	16.81	6.82	2.04	12.13	920.5	22.39	9.38
22	3.57	27.49	590.6	1.41	13.76	4.84	10.17	316.1	2.15	25.54
23	2.85	49.72	1260.9	7.25	6.58	4.84	30.75	894.6	16.00	9.26
24	1.60	21.02	857.6	7.67	9.91	1.65	6.16	581.6	14.66	14.88
25	2.33	13.99	667.1	1.75	12.74	4.10	7.64	329.1	2.26	25.07
26	3.25	101.24	934.6	1.53	8.04	2.48	27.17	425.2	.30	18.65
27	1.90	23.36	1023.9	9.36	8.32	1.98	8.99	715.6	17.52	12.06
28	3.37	24.88	644.9	1.55	12.78	3.89	13.01	360.0	2.34	22.59
29	2.22	55.13	957.2	4.33	8.45	4.02	37.66	793.3	12.25	10.26
30	1.86	26.94	759.1	8.86	10.99	1.81	8.02	651.7	14.02	13.25
31	2.28	17.99	790.6	2.11	10.74	3.74	6.71	385.3	4.13	21.77
32	2.45	89.34	725.7	1.20	10.16	2.36	23.36	408.9	.35	19.59
BAG (CALC.)	2.19	30.84	835.2	5.09	9.97	2.48	12.42	528.9	8.61	15.95
BAG (ACT.)	2.29	31.85	840.7	4.79	9.88	2.48	12.78	531.7	7.90	15.86
33	.44	11.14	135.2	.09	57.58	.56	9.91	95.0	.05	78.97
34	5.30	140.82	1643.4	1.09	4.72	5.66	71.02	1215.7	.60	6.60
35	2.47	64.09	887.2	.64	8.91	3.62	62.10	719.2	.49	10.72
36	1.67	38.13	859.7	.97	9.60	2.36	37.86	480.0	.33	16.23
37	.93	19.34	655.7	1.33	12.88	1.53	12.79	355.3	1.24	23.34
38	.78	15.73	685.7	1.34	12.45	1.22	6.88	389.4	3.82	21.96
39	1.65	11.63	624.0	5.47	13.71	1.13	4.45	471.7	8.10	18.40

EMISSION RESULTS IN GRAMS PER MILE (PER MINUTE FOR IDLE)
FUEL ECONOMY IN MILES PER GALLON (PER MINUTE FOR IDLE)

APPENDIX H

LISTING OF MODAL RESULTS ON INDIVIDUAL VEHICLES

CALIFORNIA

	VEH	YEAR	MAKE	MODL	CID	VEH	YEAR	MAKE	MODL	CID
	3125	1973	PLYM	VALI	225	3126	1973	PLYM	DUST	225
MODE NO.	HC	CO	CO2	NOXC	FUEL ECONOMY	HC	CO	CO2	NOXC	FUEL ECONOMY
1	6.86	123.59	853.1	8.73	8.30	8.41	178.33	589.4	5.45	9.90
2	1.89	34.66	226.9	2.04	30.88	3.81	87.72	211.2	.73	24.58
3	6.25	104.15	1003.0	4.50	7.48	7.48	279.54	683.5	3.37	7.74
4	3.22	19.97	675.3	9.29	12.38	4.17	83.52	436.4	5.19	15.28
5	2.96	37.03	516.6	11.58	15.19	2.05	19.78	435.9	6.39	18.75
6	1.51	12.88	173.9	3.35	44.62	2.74	16.78	194.7	2.56	38.64
7	4.91	176.40	630.0	6.29	9.62	2.86	75.11	489.2	6.91	14.40
8	2.85	13.95	168.9	4.60	44.41	1.67	25.46	243.4	3.15	30.74
9	4.20	152.22	481.0	6.06	12.10	1.85	20.89	449.7	8.35	18.17
10	3.28	17.32	156.8	3.97	45.66	5.11	34.47	190.5	2.24	34.03
11	5.37	187.01	601.6	4.68	9.73	3.18	90.85	509.6	6.78	13.40
12	4.16	20.69	181.7	3.94	39.03	5.88	42.85	199.5	2.73	31.09
13	4.84	168.05	561.1	6.34	10.56	3.68	92.15	517.2	6.75	13.17
14	3.02	14.04	229.8	4.21	33.94	4.44	26.70	233.0	3.36	30.71
15	1.51	21.88	208.2	2.08	35.88	2.83	44.31	250.2	.70	26.99
16	3.66	71.62	376.9	.97	17.71	6.43	263.89	537.9	.39	9.12
17	4.52	108.18	617.5	9.38	11.07	5.10	145.42	449.1	3.81	12.79
18	2.05	23.08	217.3	3.08	34.13	7.12	24.65	239.5	2.82	29.50
19	4.23	126.62	563.3	7.32	11.44	3.83	85.27	385.5	3.89	16.70
20	2.34	29.21	241.1	2.45	30.15	5.11	41.27	272.9	3.12	25.07
21	5.70	208.35	648.9	4.90	8.93	4.20	156.58	485.0	4.04	11.92
22	3.74	22.12	201.0	3.88	35.85	3.98	45.88	277.6	3.60	24.49
23	4.84	52.82	758.3	11.48	10.36	5.26	132.72	483.5	4.07	12.52
24	3.67	129.89	448.7	6.24	13.36	2.04	27.01	372.2	6.70	21.08
25	2.90	13.12	275.9	6.25	29.03	1.72	28.56	315.4	5.20	24.26
26	1.86	32.49	354.8	3.01	21.56	3.54	62.44	374.4	1.33	18.35
27	3.92	105.75	525.3	7.83	12.61	2.75	48.85	447.4	7.11	16.66
28	3.26	21.84	237.2	4.63	31.49	4.96	40.34	297.2	4.23	23.59
29	4.08	42.85	607.8	8.85	12.90	4.88	125.60	380.9	2.35	14.95
30	4.14	171.47	446.4	5.55	12.18	1.91	33.57	319.6	5.29	23.46
31	2.73	10.94	273.5	5.75	29.65	1.59	30.35	364.4	5.70	21.28
32	2.52	38.34	322.9	2.31	22.69	4.27	70.70	359.3	1.05	18.34
BAG (CALC.)	3.14	57.69	390.1	6.16	18.09	3.55	55.64	366.4	4.64	19.08
BAG (ACT.)	3.02	56.71	376.0	5.82	18.70	3.53	55.82	369.2	4.46	18.96
33	.74	20.63	33.2	.03	130.64	1.07	36.16	44.5	.02	84.76
34	8.64	219.98	436.1	.35	10.97	9.51	394.58	514.8	.39	7.62
35	3.46	37.90	490.3	.80	15.82	7.51	179.60	465.6	.39	11.50
36	2.23	13.75	363.8	1.00	22.61	4.12	128.38	266.5	.26	18.44
37	1.41	1.77	276.0	3.77	31.34	1.90	31.54	243.6	1.65	29.66
38	1.41	3.94	304.8	6.96	28.14	1.28	9.22	307.5	5.07	27.22
39	1.27	10.11	412.9	11.91	20.50	1.62	29.91	360.2	6.71	21.52

EMISSION RESULTS IN GRAMS PER MILE (PER MINUTE FOR IDLE)
FUEL ECONOMY IN MILES PER GALLON (PER MINUTE FOR IDLE)

APPENDIX H

LISTING OF MODAL RESULTS ON INDIVIDUAL VEHICLES

CALIFORNIA

	VEH	YEAR	MAKE	MODL	CID	VEH	YEAR	MAKE	MODL	CID
	3127	1973	PONT	LEMA	400	3128	1973	PONT	LEMA	350
MODE NO.	HC	CO	CO2	NOXC	FUEL ECONOMY	HC	CO	CO2	NOXC	FUEL ECONOMY
1	18.16	11.87	1137.9	20.00	7.31	8.42	174.36	1662.7	10.29	4.52
2	15.15	14.09	512.4	3.08	15.23	.77	23.41	635.8	.93	13.15
3	41.70	24.87	1401.0	8.30	5.64	5.98	106.39	1804.7	7.59	4.46
4	11.44	24.54	866.4	13.47	9.43	4.21	99.51	1065.5	6.31	7.19
5	5.12	18.29	750.0	16.35	11.17	2.23	13.01	1013.5	8.54	8.53
6	5.92	6.99	404.6	3.48	20.43	1.23	6.93	473.4	4.12	18.18
7	4.71	21.99	1036.5	16.85	8.17	6.12	169.83	905.9	7.80	7.44
8	4.09	4.80	370.0	6.90	22.73	1.58	6.17	429.9	5.73	19.96
9	2.95	8.19	744.7	17.58	11.57	2.25	18.35	830.1	13.41	10.25
10	10.49	6.02	376.3	3.47	21.18	1.48	7.85	392.3	4.15	21.68
11	5.12	8.03	1073.9	19.72	8.05	5.09	138.00	1035.3	11.14	7.00
12	12.61	6.69	413.5	5.31	19.13	1.93	10.96	435.4	4.85	19.35
13	3.88	11.90	1072.4	10.46	8.04	4.54	123.98	1138.0	7.76	6.59
14	5.06	4.98	444.5	1.46	18.95	.75	3.51	496.3	2.19	17.60
15	5.85	19.00	437.7	3.37	18.26	1.71	19.31	376.7	2.37	21.52
16	19.99	43.99	759.9	2.54	9.95	4.51	141.16	928.5	2.47	7.62
17	5.68	14.33	1072.5	10.66	7.97	5.09	136.58	1049.9	6.87	6.93
18	7.59	11.68	419.5	.66	19.21	.49	9.18	431.2	1.35	19.85
19	7.82	14.08	832.1	17.43	10.10	5.90	179.06	1022.9	6.86	6.71
20	12.37	14.47	452.1	2.92	17.26	1.73	12.65	542.9	4.41	15.62
21	4.87	40.08	1117.2	12.24	7.42	6.49	241.51	1135.1	5.22	5.78
22	8.21	9.38	451.7	.94	18.02	.96	9.54	598.2	2.38	14.40
23	9.17	32.08	1193.7	8.15	6.97	3.40	46.85	1288.6	7.87	6.46
24	1.68	13.80	792.1	7.06	10.84	1.99	27.98	814.7	6.23	10.26
25	4.47	11.07	478.7	5.01	17.39	1.66	7.00	454.6	7.27	18.85
26	10.85	39.06	722.3	3.03	10.85	2.66	24.38	710.1	4.24	11.73
27	3.32	10.38	931.3	8.42	9.26	3.88	102.15	993.2	6.27	7.61
28	10.41	8.52	573.5	1.37	14.32	1.03	9.51	534.4	2.68	16.06
29	9.68	26.82	963.9	5.02	8.56	3.72	74.82	1185.9	6.15	6.75
30	1.90	10.78	751.8	8.35	11.46	3.22	128.47	806.9	4.52	8.71
31	3.39	7.81	537.4	5.59	15.84	1.82	9.24	551.2	8.33	15.53
32	13.16	43.70	601.4	2.35	12.47	1.82	31.13	572.3	3.02	14.16
BAG (CALC.)	6.54	12.19	682.0	7.06	12.29	2.37	48.72	740.8	5.94	10.76
BAG (ACT.)	6.71	11.55	687.6	6.94	12.21	2.41	48.91	749.2	5.42	10.65
33	3.86	.62	110.1	.09	72.00	.75	13.44	122.2	.13	60.93
34	75.59	5.51	1209.6	1.11	6.09	7.07	129.87	1566.3	1.47	4.95
35	41.97	3.58	612.1	2.32	11.82	1.31	25.36	1035.0	.91	8.23
36	20.18	14.30	558.5	1.39	13.76	2.17	27.59	558.1	.85	14.59
37	5.97	185.54	296.1	.43	14.63	2.20	4.54	463.1	4.08	18.60
38	2.10	11.71	491.8	6.52	17.17	1.73	4.20	475.7	6.93	18.20
39	1.53	6.50	584.9	9.60	14.79	1.36	5.35	586.0	11.51	14.82

EMISSION RESULTS IN GRAMS PER MILE (PER MINUTE FOR IDLE)
FUEL ECONOMY IN MILES PER GALLON (PER MINUTE FOR IDLE)

APPENDIX H

LISTING OF MODAL RESULTS ON INDIVIDUAL VEHICLES

CALIFORNIA

	VEH	YEAR	MAKE	MODL	CID	VEH	YEAR	MAKE	MODL	CID
	3129	1973	DATS	1600	97	3130	1973	OPEL	MANT	116
MODE NO.	HC	CO	CO2	NOXC	FUEL ECONOMY	HC	CO	CO2	NOXC	FUEL ECONOMY
1	7.00	67.13	626.7	7.91	11.76	6.47	146.17	552.5	3.35	11.06
2	1.38	10.23	245.3	.99	33.40	3.40	80.08	254.2	.43	22.71
3	10.12	75.81	788.7	3.87	9.44	9.23	240.92	583.4	1.00	8.95
4	1.87	16.78	486.1	5.27	17.12	4.78	111.42	395.8	1.49	15.14
5	1.46	10.97	388.6	6.56	21.62	3.44	68.21	342.3	2.35	19.28
6	1.19	3.45	197.4	3.08	42.96	2.16	38.40	175.7	.43	36.55
7	1.94	66.87	357.3	4.34	18.94	3.75	73.65	353.3	2.44	18.45
8	.78	3.55	234.5	4.58	36.60	1.89	53.39	235.8	.93	27.25
9	1.38	26.34	367.4	7.77	21.48	3.07	57.57	352.7	2.87	19.60
10	1.07	6.91	183.5	2.90	44.87	2.61	41.31	193.3	.60	33.30
11	2.27	62.39	468.7	7.36	15.46	5.45	130.61	414.2	2.49	13.94
12	1.56	9.96	188.4	2.97	42.47	2.78	49.15	178.2	.72	33.59
13	2.91	60.43	459.4	7.94	15.75	5.02	114.90	394.0	2.76	15.03
14	1.16	5.69	223.1	3.79	37.65	3.04	47.29	204.9	.71	30.73
15	2.20	10.04	176.6	1.59	44.52	2.36	64.38	187.1	.35	30.01
16	2.88	22.69	537.5	.83	15.24	4.59	167.75	399.5	.58	13.10
17	3.23	33.81	462.5	7.71	16.88	4.67	97.85	431.6	2.91	14.79
18	1.35	6.36	251.9	3.12	33.34	2.61	50.29	195.4	.63	31.40
19	1.67	23.60	447.9	6.99	18.10	4.16	84.98	375.7	2.54	16.99
20	1.15	7.30	273.2	3.02	30.79	3.03	60.56	224.8	.58	26.93
21	3.55	86.24	443.2	5.86	15.04	5.46	104.33	389.2	2.67	15.56
22	1.47	10.34	277.9	3.73	29.70	3.13	59.65	225.2	.75	26.99
23	4.42	36.22	478.5	7.19	16.15	5.69	138.27	452.5	1.73	12.90
24	1.44	19.13	347.6	6.12	23.22	2.84	60.87	296.1	2.18	22.15
25	1.20	6.57	267.6	4.31	31.51	2.59	50.99	253.0	1.09	26.01
26	1.70	12.75	368.8	1.96	22.51	3.23	90.12	341.6	.45	17.99
27	1.67	21.03	418.0	8.18	19.45	3.56	75.16	369.1	2.92	17.80
28	1.29	6.76	291.8	3.56	28.95	3.06	56.76	252.9	.80	25.23
29	5.02	32.86	429.4	5.62	17.86	5.10	119.55	361.4	1.12	15.70
30	1.66	41.31	360.7	5.03	20.60	2.71	60.40	293.5	2.19	22.35
31	1.22	4.27	301.7	5.47	28.42	2.63	60.38	292.7	1.28	22.42
32	1.97	10.20	365.3	1.97	22.90	3.17	94.40	298.7	.39	19.42
BAG (CALC.)	1.81	22.84	329.9	5.37	23.89	3.54	78.24	298.4	1.48	20.52
BAG (ACT.)	1.78	21.87	312.8	5.15	25.16	3.58	78.21	301.2	1.43	20.38
33	1.23	2.08	28.6	.02	248.11	.41	16.21	39.5	.03	134.05
34	3.53	16.05	533.7	.18	15.57	5.05	228.86	682.0	.55	8.39
35	1.89	17.32	607.8	.92	13.85	5.19	158.13	482.0	.45	11.88
36	1.48	11.16	380.4	.61	22.05	3.42	104.06	327.8	.30	17.68
37	.97	4.61	303.9	1.92	28.24	2.57	66.99	261.5	.45	23.68
38	.88	2.86	250.8	4.70	34.39	2.27	46.19	241.2	.94	27.65
39	.82	2.92	312.4	8.42	27.78	2.43	51.03	307.4	1.88	22.45

EMISSION RESULTS IN GRAMS PER MILE (PER MINUTE FOR IDLE)
FUEL ECONOMY IN MILES PER GALLON (PER MINUTE FOR IDLE)

APPENDIX H

LISTING OF MODAL RESULTS ON INDIVIDUAL VEHICLES

CALIFORNIA

	VEH	YEAR	MAKE	MODL	CID	VEH	YEAR	MAKE	MODL	CID
	3131	1973	TOYO	CORO	97	3132	1973	VOLK	SEDA	97
MODE NO.	HC	CO	CO2	NOXC	FUEL ECONOMY	HC	CO	CO2	NOXC	FUEL ECONOMY
1	2.86	56.07	384.1	1.69	18.44	12.59	112.19	633.1	3.88	10.45
2	3.33	101.88	245.4	.53	21.33	.85	11.12	325.7	.85	25.66
3	2.61	36.65	409.6	.87	18.66	5.18	122.51	797.7	2.82	8.82
4	2.59	72.84	239.0	.73	24.54	3.73	45.41	414.1	3.94	17.85
5	2.44	69.38	270.1	1.23	22.94	3.72	31.48	427.6	3.94	18.15
6	2.01	68.98	205.0	.67	27.75	.59	4.55	194.4	1.37	43.63
7	2.50	54.84	259.4	2.30	25.11	1.45	32.80	278.1	2.64	26.55
8	2.51	64.41	229.0	1.70	26.25	2.12	66.74	307.7	1.91	21.17
9	2.41	58.14	217.2	1.99	28.07	1.38	26.20	351.1	3.31	22.38
10	3.77	53.73	164.8	1.12	33.98	.95	12.28	217.8	1.59	36.96
11	3.78	99.51	306.6	2.24	18.69	3.69	59.87	366.8	3.22	18.78
12	4.20	67.90	219.3	1.51	26.16	1.46	34.97	260.4	1.43	27.74
13	3.81	84.53	285.7	2.27	20.61	4.69	66.71	407.3	3.20	16.84
14	2.47	64.12	202.9	1.34	28.49	1.17	24.68	231.8	1.76	32.35
15	2.93	44.49	205.2	.60	31.20	.76	9.90	186.0	.82	43.51
16	4.69	145.04	574.0	.63	10.87	3.37	67.94	433.5	.61	16.11
17	5.57	77.56	320.4	1.71	19.30	6.54	85.29	455.8	3.58	14.54
18	2.48	72.77	215.6	.79	26.27	.65	7.60	212.2	1.39	39.23
19	3.19	60.22	233.3	.93	26.25	3.01	38.66	450.4	4.09	17.04
20	2.97	87.46	227.2	.68	23.73	1.05	17.02	227.4	1.65	34.47
21	3.94	83.51	273.7	1.83	21.26	5.92	77.58	372.8	2.72	17.28
22	4.48	72.83	207.8	1.37	26.38	2.27	61.23	265.8	1.51	24.04
23	2.72	49.62	306.2	.67	22.59	6.00	95.46	540.4	3.90	12.51
24	2.20	61.99	233.8	1.35	26.24	2.07	30.04	358.9	2.98	21.50
25	2.90	75.06	227.5	1.90	25.03	1.28	20.86	212.1	2.60	35.65
26	3.72	72.12	315.2	.86	20.16	1.24	8.71	322.2	.89	26.12
27	2.97	53.22	285.2	2.46	23.46	3.76	58.18	392.2	3.09	17.91
28	4.38	68.21	219.0	1.54	26.10	1.28	16.86	290.2	2.09	27.67
29	1.92	25.51	268.1	.56	28.24	4.43	60.20	507.5	3.84	14.40
30	1.99	70.48	200.7	1.08	27.93	2.62	34.39	359.4	2.91	21.04
31	3.43	80.56	248.9	2.26	22.97	1.81	60.64	293.5	2.03	22.50
32	4.66	54.67	272.5	.84	23.78	1.26	18.35	274.2	1.15	28.90
BAG (CALC.)	3.50	70.66	253.1	1.77	23.65	2.47	45.44	325.0	2.38	21.95
BAG (ACT.)	3.51	67.56	253.1	1.65	23.96	2.51	45.40	313.8	2.38	22.58
33	.24	1.59	39.6	.02	206.93	.31	9.32	45.4	.03	145.44
34	2.70	15.45	628.3	.38	13.42	3.02	94.01	563.4	.37	12.31
35	4.42	112.15	494.4	.48	12.96	1.01	8.26	534.3	.65	16.12
36	2.75	59.85	304.1	.26	21.81	.81	6.76	337.1	.50	25.34
37	2.04	66.14	225.2	.29	26.45	.49	1.62	265.1	1.17	32.97
38	1.93	55.70	184.8	.72	31.87	.63	2.07	270.3	2.86	32.21
39	2.23	50.25	233.7	2.34	27.76	.79	3.61	346.5	5.15	25.02

EMISSION RESULTS IN GRAMS PER MILE (PER MINUTE FOR IDLE)
FUEL ECONOMY IN MILES PER GALLON (PER MINUTE FOR IDLE)

APPENDIX H

LISTING OF MODAL RESULTS ON INDIVIDUAL VEHICLES

CALIFORNIA

	VEH	YEAR	MAKE	MODL	CID	VEH	YEAR	MAKE	MODL	CID
	3133	1973	VOLK	SEDA	97	2134	1972	AMC	GREM	232
MODE NO.	HC	CO	CO2	NOXC	FUEL ECONOMY	HC	CO	CO2	NOXC	FUEL ECONOMY
1	5.16	69.84	575.9	1.37	12.64	5.73	146.98	773.9	5.53	8.68
2	.57	7.04	238.1	1.48	35.36	1.86	56.89	328.5	.48	20.94
3	5.84	101.50	784.1	.31	9.22	5.46	181.99	762.4	3.46	8.33
4	1.42	39.12	483.4	1.11	16.16	2.80	43.42	617.7	4.24	12.77
5	.96	18.99	366.3	2.77	22.23	1.52	6.36	548.7	6.43	15.75
6	.31	2.96	163.9	1.77	52.33	1.27	4.58	292.7	.66	29.20
7	1.03	28.43	286.9	2.67	26.51	3.31	65.52	587.4	8.02	12.66
8	.62	5.65	220.2	3.65	38.41	.68	3.12	335.4	1.76	25.92
9	.97	14.40	316.5	3.88	25.93	.80	3.27	547.8	9.53	15.98
10	.99	8.40	189.5	2.58	43.13	2.54	14.81	282.6	1.10	28.27
11	2.97	42.48	420.2	4.76	17.88	3.01	85.72	595.8	7.43	11.99
12	1.22	7.17	198.4	3.79	41.57	4.42	20.17	287.5	.89	26.64
13	3.57	50.88	416.0	4.48	17.50	2.67	45.85	635.6	8.66	12.39
14	.57	6.80	205.7	3.52	40.68	2.06	8.45	312.1	1.77	26.74
15	.78	2.98	183.6	.82	46.52	.48	7.95	326.0	.57	26.11
16	2.44	46.02	413.1	.73	18.00	3.82	163.62	485.7	.26	11.76
17	3.31	55.42	430.3	3.36	16.81	3.46	72.95	606.8	5.61	12.12
18	.36	4.61	190.1	1.70	44.72	2.56	17.27	337.5	.97	23.81
19	2.38	31.63	442.2	1.99	17.77	2.79	53.40	552.9	5.22	13.75
20	.75	5.79	237.1	1.96	35.70	2.37	23.63	385.8	1.10	20.62
21	5.09	62.78	366.3	3.30	18.45	4.38	152.93	590.8	5.15	10.50
22	1.43	12.97	195.4	2.86	40.29	3.10	19.37	328.9	1.70	24.04
23	4.73	97.50	492.1	1.02	13.44	4.12	72.69	645.8	5.19	11.48
24	1.17	16.77	351.7	3.60	23.25	1.25	6.67	625.1	6.51	13.88
25	.62	6.50	214.0	3.84	39.24	.66	6.06	399.5	3.10	21.59
26	.93	3.42	254.3	1.43	33.80	1.05	10.63	560.8	1.20	15.28
27	2.61	37.01	395.7	5.07	19.20	2.18	30.29	526.8	7.04	15.27
28	1.26	7.26	212.0	3.22	39.02	2.22	18.52	373.4	2.14	21.67
29	3.83	54.28	485.6	.96	15.22	3.14	65.06	554.1	3.19	13.32
30	1.15	12.32	347.8	3.15	23.94	1.60	16.76	455.4	6.20	18.23
31	.67	9.40	241.2	4.58	34.39	.33	4.19	414.9	2.90	21.01
32	1.00	3.40	270.9	1.22	31.76	1.28	30.36	506.6	1.05	15.89
BAG (CALC.)	1.97	24.90	305.3	3.61	25.31	2.03	29.82	465.8	4.16	17.10
BAG (ACT.)	1.97	24.42	296.8	3.46	25.99	1.95	29.25	451.7	3.89	17.62
33	.45	6.98	36.3	.02	182.24	.59	22.94	53.7	.03	96.88
34	4.64	85.36	417.7	.19	15.66	7.21	264.29	664.1	.39	8.05
35	1.10	7.29	538.1	.79	16.05	1.26	20.36	793.4	.87	10.70
36	.84	6.50	623.3	2.65	13.95	1.45	21.57	491.5	.51	16.75
37	.50	1.93	261.4	1.42	33.36	.49	4.19	384.1	.90	22.63
38	.37	2.90	279.3	2.33	31.14	.12	1.87	407.4	1.95	21.61
39	.79	4.51	319.3	5.06	26.99	.16	2.02	433.6	3.94	20.30

EMISSION RESULTS IN GRAMS PER MILE (PER MINUTE FOR IDLE)
FUEL ECONOMY IN MILES PER GALLON (PER MINUTE FOR IDLE)

APPENDIX H

LISTING OF MODAL RESULTS ON INDIVIDUAL VEHICLES

CALIFORNIA

	VEH	YEAR	MAKE	MODL	CID	VEH	YEAR	MAKE	MODL	CID
	2135	1972	BUIC	SKYL	350	2136	1972	CADI	FLEE	472
MODE NO.	HC	CO	CO2	NOXC	FUEL ECONOMY	HC	CO	CO2	NOXC	FUEL ECONOMY
1	5.26	29.60	915.2	11.74	9.07	4.79	89.38	1360.7	9.80	5.85
2	1.17	22.68	404.4	1.19	20.00	2.05	55.61	559.9	.57	13.58
3	5.88	1.73	1041.2	4.17	8.35	7.34	214.17	1134.9	2.91	5.94
4	3.21	5.66	732.3	7.10	11.81	1.48	46.98	956.8	4.71	8.57
5	2.03	13.89	647.2	8.65	13.14	2.63	29.21	689.2	10.19	11.94
6	1.45	6.64	337.4	2.38	25.18	4.20	20.70	378.9	1.36	20.89
7	3.03	100.04	794.7	5.70	9.23	3.98	91.50	938.0	10.02	8.11
8	1.38	8.03	330.0	4.03	25.58	3.73	9.25	434.2	2.66	19.27
9	1.42	9.87	664.3	10.87	12.97	2.26	35.09	740.2	9.69	11.06
10	1.70	6.12	281.1	3.03	29.97	4.13	9.19	379.5	1.69	21.80
11	1.74	24.90	880.3	12.69	9.60	3.01	68.28	1034.0	10.65	7.71
12	2.60	5.70	305.8	3.06	27.48	6.41	11.66	417.9	2.00	19.44
13	2.07	32.00	825.0	12.28	10.07	2.91	66.89	1003.8	9.97	7.94
14	1.61	7.07	331.0	3.62	25.56	3.86	10.17	431.6	2.54	19.30
15	1.87	28.93	454.6	.98	17.54	1.39	36.83	411.0	.37	18.75
16	2.54	49.16	747.5	.36	10.66	3.65	157.38	985.8	.37	7.13
17	2.50	21.65	760.3	11.59	11.06	3.06	60.04	1027.0	9.86	7.85
18	1.89	9.28	306.6	3.37	27.12	3.83	20.89	445.4	1.05	18.10
19	2.09	13.29	601.2	9.06	14.12	2.11	39.34	828.2	7.72	9.90
20	1.55	8.16	418.6	3.36	20.34	3.45	27.76	478.7	.99	16.65
21	2.80	91.08	829.1	7.02	9.05	3.83	105.39	1080.7	9.02	7.05
22	1.92	6.75	346.3	3.34	24.45	4.94	14.46	474.6	2.63	17.30
23	3.98	47.38	715.4	8.47	11.06	3.30	91.49	1107.4	7.15	7.03
24	1.55	13.84	624.0	8.77	13.64	2.12	31.28	650.9	7.97	12.56
25	1.93	7.82	398.7	5.04	21.28	2.63	13.97	545.5	4.50	15.41
26	1.82	30.31	416.1	1.30	18.90	2.52	59.76	676.4	.77	11.40
27	1.76	13.26	717.1	11.53	11.94	2.16	41.03	860.9	8.97	9.52
28	1.92	6.90	346.2	3.84	24.44	4.12	12.75	507.2	2.88	16.43
29	3.82	17.69	635.8	6.54	13.14	2.74	93.56	954.3	3.65	8.00
30	1.66	2.52	673.4	9.83	13.00	2.10	41.70	620.0	7.29	12.82
31	1.75	10.28	384.2	4.85	21.86	1.71	16.02	582.4	5.22	14.48
32	1.81	34.62	456.4	.75	17.18	1.97	50.60	614.4	.63	12.68
BAG (CALC.)	1.81	20.35	535.8	6.73	15.48	2.85	39.70	679.7	5.57	11.82
BAG (ACT.)	1.84	20.79	538.5	6.45	15.38	2.82	39.99	688.0	5.32	11.68
33	.52	9.63	69.3	.03	103.17	.90	26.67	96.6	.05	62.80
34	5.93	112.63	832.1	.37	8.63	10.15	301.43	1197.4	.56	5.21
35	1.75	26.12	663.4	.56	12.50	3.69	131.26	737.3	.28	9.29
36	1.61	26.31	449.5	.43	17.90	2.25	80.12	591.4	.31	12.25
37	1.58	25.46	362.6	1.71	21.77	1.36	34.99	432.8	.59	18.04
38	1.39	8.21	400.2	5.53	21.26	1.06	26.92	476.7	2.57	16.99
39	.89	7.33	483.3	7.28	17.84	.73	11.66	575.4	6.69	14.89

EMISSION RESULTS IN GRAMS PER MILE (PER MINUTE FOR IDLE)
FUEL ECONOMY IN MILES PER GALLON (PER MINUTE FOR IDLE)

APPENDIX H

LISTING OF MODAL RESULTS ON INDIVIDUAL VEHICLES

CALIFORNIA

	VEH	YEAR	MAKE	MODL	CID	VEH	YEAR	MAKE	MODL	CID
	2137	1972	CHEV	VEGA	140	2138	1972	CHEV	MALI	350
MODE NO.	HC	CO	CO2	NOXC	FUEL ECONOMY	HC	CO	CO2	NOXC	FUEL ECONOMY
1	2.75	91.19	882.9	3.02	8.58	2.20	25.06	1287.4	6.17	6.65
2	2.08	10.74	232.0	.16	34.73	.38	8.29	425.3	.50	20.19
3	1.29	76.52	917.9	1.19	8.52	3.60	54.38	1578.1	1.54	5.30
4	.42	25.50	662.2	1.74	12.61	.95	12.28	901.1	2.66	9.61
5	.61	28.31	556.0	2.32	14.73	.95	6.12	717.6	5.10	12.15
6	2.24	4.28	215.7	.49	38.67	.40	3.89	332.9	1.34	26.08
7	1.56	101.74	640.8	1.81	11.02	1.48	32.61	897.6	8.03	9.31
8	1.37	6.56	219.9	.66	37.85	.71	4.15	337.8	2.72	25.61
9	.23	17.09	524.2	2.72	16.09	.85	5.92	728.5	8.34	11.99
10	1.34	3.50	221.8	.51	38.34	.49	4.09	308.8	1.72	28.02
11	1.02	70.24	608.4	2.18	12.29	.69	8.88	933.6	8.38	9.34
12	2.58	3.60	251.0	.79	33.51	.46	7.34	318.6	2.11	26.77
13	.68	45.15	625.1	2.32	12.71	.77	10.52	892.5	7.97	9.74
14	1.06	4.82	231.4	.67	36.62	.41	3.60	332.8	2.28	26.13
15	.81	5.13	236.2	.27	35.95	.31	5.22	387.7	.52	22.36
16	.66	25.86	630.1	.11	13.19	.82	28.90	1032.2	.72	8.22
17	1.01	50.57	714.4	1.86	11.13	1.02	12.11	922.6	5.97	9.39
18	1.20	3.94	271.0	.37	31.58	.43	4.49	377.2	1.57	23.01
19	2.29	35.58	589.6	1.81	13.60	.77	10.70	791.7	5.10	10.94
20	1.92	6.73	282.5	.36	29.67	.43	5.26	459.0	1.62	18.94
21	1.09	88.90	651.9	2.43	11.16	1.14	21.19	954.5	9.50	8.95
22	1.94	5.85	281.3	.63	29.92	.49	4.53	368.4	2.25	23.54
23	.57	47.54	869.2	1.26	9.38	1.51	24.77	1042.0	3.78	8.17
24	.67	38.57	495.4	1.70	15.90	.66	4.21	387.4	6.05	22.41
25	1.84	5.00	241.6	.95	34.77	.58	4.50	636.1	3.50	13.76
26	2.58	9.95	442.6	.39	19.03	.68	9.52	768.7	1.05	11.29
27	.55	32.46	541.4	1.88	14.94	.63	8.51	502.7	6.16	17.13
28	1.26	5.11	264.5	.55	32.09	.41	4.32	627.8	2.60	13.96
29	1.60	61.53	713.4	.81	10.89	1.28	24.55	389.6	2.83	20.54
30	.23	39.26	531.4	1.70	14.95	.72	8.72	324.6	6.36	26.06
31	2.04	6.86	319.6	.88	26.34	.61	5.04	624.3	3.80	13.99
32	1.90	8.50	379.8	.33	22.24	.61	8.36	616.9	.79	14.04
BAG (CALC.)	1.18	24.88	423.2	1.23	19.04	.64	8.69	582.3	4.30	14.84
BAG (ACT.)	1.25	24.09	409.1	1.26	19.68	.68	7.93	579.5	4.17	14.94
33	.21	4.21	42.6	.03	178.08	.38	4.78	113.3	.08	72.72
34	2.86	51.05	492.4	.18	15.26	3.35	50.18	1385.1	.74	6.02
35	1.72	18.37	302.6	.18	26.35	.81	13.72	851.3	.46	10.14
36	.64	5.03	359.0	.42	24.06	.70	9.15	529.8	.31	16.25
37	.28	2.05	305.3	.75	28.68	.20	2.62	576.6	.86	15.27
38	.08	2.07	339.0	1.17	25.92	.76	3.43	398.3	2.56	21.85
39	.08	2.34	370.6	2.37	23.69	.45	6.12	463.6	5.45	18.70

EMISSION RESULTS IN GRAMS PER MILE (PER MINUTE FOR IDLE)
FUEL ECONOMY IN MILES PER GALLON (PER MINUTE FOR IDLE)

APPENDIX H

LISTING OF MODAL RESULTS ON INDIVIDUAL VEHICLES

CALIFORNIA

	VEH	YEAR	MAKE	MODL	CID	VEH	YEAR	MAKE	MODL	CID
	2139	1972	CHEV	MONT	350	2140	1972	CHEV	NOVA	307
MODE NO.	HC	CO	CO2	NOXC	FUEL ECONOMY	HC	CO	CO2	NOXC	FUEL ECONOMY
1	2.72	20.28	1443.9	7.04	5.98	9.81	71.01	924.2	9.20	8.32
2	1.10	3.02	438.3	.45	19.88	2.10	25.19	339.4	.65	23.02
3	3.33	9.15	1881.1	2.15	4.66	7.89	186.83	1084.9	4.96	6.32
4	1.38	6.30	1042.0	2.81	8.40	2.11	18.91	616.9	3.73	13.58
5	.64	4.67	805.3	3.97	10.89	1.92	8.10	458.0	4.41	18.61
6	2.15	.71	252.9	.98	34.03	1.30	4.23	237.9	1.25	35.69
7	4.07	256.39	803.2	2.69	7.28	2.52	14.53	629.7	10.41	13.44
8	2.95	1.31	269.5	2.29	31.60	1.58	14.29	293.0	1.67	27.70
9	1.30	20.97	744.6	5.21	11.35	2.15	18.24	541.9	6.92	15.37
10	4.06	1.91	258.7	1.45	32.33	4.14	15.47	263.7	.91	29.47
11	2.15	95.09	931.2	5.19	8.16	3.44	46.77	651.4	8.77	12.06
12	5.56	2.07	281.7	1.54	29.33	4.70	15.62	398.6	1.17	20.26
13	1.56	46.60	1032.3	6.12	7.99	4.51	44.15	693.1	8.67	11.43
14	3.00	1.81	274.3	1.98	30.96	2.61	11.97	289.7	1.36	28.02
15	1.22	.69	351.4	.48	24.91	.83	10.22	390.8	.47	21.68
16	1.13	12.78	831.7	.83	10.38	2.17	15.07	968.7	.46	8.88
17	1.11	11.82	995.9	6.09	8.72	4.80	47.17	733.7	7.42	10.78
18	1.79	.92	307.1	.86	28.24	2.53	8.91	301.0	1.15	27.47
19	.76	9.31	1010.6	4.64	8.64	2.52	22.31	641.6	6.17	12.96
20	2.28	1.67	378.1	.90	22.88	5.12	9.55	244.3	1.31	32.21
21	3.47	197.86	1010.3	3.42	6.66	5.39	101.08	708.4	7.68	10.04
22	3.63	2.14	303.2	1.81	27.91	4.19	19.30	336.9	1.27	23.32
23	1.92	21.28	1249.5	3.51	6.89	5.41	74.56	847.7	6.29	9.04
24	.70	20.74	780.7	4.46	10.88	1.98	10.55	505.4	6.27	16.80
25	2.34	2.49	323.0	2.79	26.54	2.53	20.78	385.2	1.84	20.84
26	2.07	2.46	457.1	.64	18.98	1.37	7.00	495.4	1.12	17.38
27	.88	12.57	891.1	6.20	9.71	3.03	24.95	558.5	7.42	14.61
28	3.16	2.40	330.4	2.03	25.78	3.54	15.95	342.4	1.51	23.44
29	1.36	9.43	1017.6	2.98	8.56	4.41	50.83	612.0	4.31	12.57
30	1.26	90.08	785.1	3.16	9.54	2.01	8.35	512.0	7.31	16.70
31	1.52	2.58	339.2	3.14	25.50	1.66	21.69	374.1	2.56	21.47
32	1.60	4.11	457.0	.74	18.94	1.70	14.40	385.3	.99	21.47
BAG (CALC.)	1.91	24.10	608.6	3.22	13.60	3.15	25.55	462.5	4.05	17.31
BAG (ACT.)	1.97	24.65	605.8	3.14	13.64	3.17	24.21	459.6	3.81	17.48
33	.48	1.42	106.0	.06	80.86	.61	9.33	74.0	.04	98.01
34	5.12	17.54	1347.3	.76	6.38	8.43	120.06	888.1	.53	8.04
35	1.12	7.50	932.3	.67	9.37	1.49	5.99	848.7	.54	10.29
36	.79	5.29	597.9	.44	14.58	1.07	3.64	541.4	.44	16.12
37	1.20	2.72	414.1	.35	21.02	.70	2.28	355.4	.55	24.57
38	.84	2.80	410.3	1.23	21.26	.89	4.95	367.6	1.96	23.47
39	.45	4.08	497.0	4.14	17.58	1.32	19.97	451.0	3.12	18.24

EMISSION RESULTS IN GRAMS PER MILE (PER MINUTE FOR IDLE)
FUEL ECONOMY IN MILES PER GALLON (PER MINUTE FOR IDLE)

APPENDIX H

LISTING OF MODAL RESULTS ON INDIVIDUAL VEHICLES

CALIFORNIA

	VEH	YEAR	MAKE	MODL	CID	VEH	YEAR	MAKE	MODL	CID
	2141	1972	CHEV	IMPA	350	2142	1972	CHEV	STAW	400
MODE NO.	HC	CO	CO2	NOXC	FUEL ECONOMY	HC	CO	CO2	NOXC	FUEL ECONOMY
1	2.12	57.59	1152.6	14.59	7.10	55.72	131.01	1426.9	11.53	4.90
2	.48	12.44	438.7	.78	19.31	2.44	4.48	466.2	.72	18.45
3	2.46	78.93	1223.4	6.46	6.55	43.98	49.11	1812.1	8.78	4.37
4	1.08	18.31	658.3	8.93	12.85	31.88	36.11	1043.3	8.55	7.39
5	1.17	14.53	664.6	13.16	12.84	22.74	56.02	878.0	7.22	8.55
6	.39	3.75	285.9	2.90	30.29	3.43	5.07	352.0	1.07	23.93
7	2.21	56.17	851.6	15.78	9.37	40.56	318.47	938.3	3.41	5.66
8	1.53	7.91	438.9	5.93	19.46	4.70	10.97	369.3	1.83	22.11
9	1.43	30.96	688.9	14.96	11.96	23.60	179.00	772.9	5.27	7.86
10	.49	7.30	345.7	3.49	24.74	3.68	6.63	380.1	1.77	22.07
11	1.44	52.64	978.2	14.74	8.33	55.69	301.53	946.7	4.94	5.56
12	.74	7.96	390.8	3.40	21.88	5.13	7.28	365.5	1.53	22.57
13	1.32	45.29	920.7	13.79	8.91	6.89	103.18	1058.1	10.16	7.15
14	.49	8.03	424.1	4.93	20.25	2.54	8.71	427.6	2.39	19.75
15	.34	16.57	502.0	1.48	16.77	1.54	3.15	436.6	.99	19.88
16	.92	37.01	674.6	1.07	12.06	3.15	8.99	1022.3	1.41	8.48
17	1.20	31.75	947.8	13.44	8.86	36.57	99.61	1110.0	9.75	6.42
18	.37	4.14	440.0	2.64	19.83	3.01	7.67	469.4	1.87	18.08
19	1.25	25.70	859.0	12.24	9.83	2.07	49.52	1011.2	7.79	8.10
20	.45	7.34	451.5	3.12	19.11	2.96	3.72	511.6	1.69	16.85
21	1.93	70.29	1003.5	15.44	7.92	5.06	153.71	1142.4	10.10	6.34
22	.61	8.60	440.1	4.47	19.48	3.50	5.45	461.7	2.23	18.44
23	1.66	40.57	1033.6	10.33	8.05	26.80	40.06	1254.9	10.65	6.33
24	1.10	19.39	617.0	12.56	13.63	2.71	46.42	796.8	7.71	10.10
25	.63	9.79	476.3	5.91	17.98	2.29	6.54	511.3	2.96	16.78
26	.47	13.72	686.2	1.22	12.51	1.52	5.71	820.0	1.87	10.64
27	.97	30.80	817.1	12.24	10.22	2.67	65.73	924.7	9.11	8.56
28	.47	9.32	467.8	5.59	18.34	2.45	7.81	497.6	2.52	17.15
29	1.26	37.51	857.2	7.23	9.65	71.32	195.30	926.5	3.87	6.08
30	1.29	23.32	688.1	12.93	12.18	24.08	253.53	646.8	2.94	7.91
31	.66	11.17	538.9	7.15	15.89	10.81	12.68	518.3	3.15	15.50
32	.66	19.90	617.7	1.47	13.63	5.17	7.13	536.9	1.46	15.72
BAG (CALC.)	.83	22.94	633.7	8.24	13.20	11.75	68.51	697.7	4.51	10.53
BAG (ACT.)	.88	22.37	642.1	7.80	13.05	15.44	68.48	706.1	4.21	10.29
33	.36	5.63	117.7	.08	69.50	.47	.97	112.1	.10	77.13
34	3.62	57.77	1450.6	.90	5.72	6.14	9.15	1327.8	1.01	6.52
35	1.66	29.57	733.9	.45	11.30	1.35	6.44	1038.7	1.09	8.43
36	.83	14.23	545.5	.30	15.56	1.12	4.44	729.8	.93	11.99
37	.80	5.74	394.5	1.57	21.86	.67	3.35	574.3	1.13	15.26
38	.68	2.86	444.1	6.21	19.69	.41	4.22	564.4	3.09	15.51
39	.53	10.93	575.5	12.70	14.93	.20	7.55	511.6	3.11	16.94

EMISSION RESULTS IN GRAMS PER MILE (PER MINUTE FOR IDLE)
FUEL ECONOMY IN MILES PER GALLON (PER MINUTE FOR IDLE)

APPENDIX H

LISTING OF MODAL RESULTS ON INDIVIDUAL VEHICLES

CALIFORNIA

	VEH	YEAR	MAKE	MODL	CID	VEH	YEAR	MAKE	MODL	CID
	2143	1972	DODG	CORO	318	2144	1972	FORD	PINT	122
MODE NO.	HC	CO	CO2	NOXC	FUEL ECONOMY	HC	CO	CO2	NOXC	FUEL ECONOMY
1	5.74	148.62	703.8	7.07	9.29	10.84	89.98	522.2	7.09	12.72
2	3.00	80.99	455.1	.54	15.00	3.92	11.20	248.7	1.37	31.84
3	6.58	248.31	807.9	2.20	7.28	17.66	86.54	594.4	2.42	11.29
4	2.74	77.04	538.4	3.78	13.28	4.66	20.60	408.3	4.29	19.49
5	3.08	35.62	513.4	8.72	15.32	2.82	17.71	410.1	7.02	19.86
6	2.32	10.32	396.1	3.56	21.15	1.52	3.24	168.4	3.09	49.78
7	3.43	59.94	602.2	8.49	12.55	3.52	45.86	319.0	4.23	22.07
8	1.37	8.18	482.2	5.65	17.77	1.43	3.44	270.7	5.74	31.63
9	2.09	14.54	561.0	10.77	15.03	2.92	44.26	330.1	6.28	21.71
10	2.23	24.18	354.2	3.40	22.23	2.16	7.37	181.9	3.61	44.31
11	3.68	72.13	794.6	11.07	9.65	4.93	83.54	388.8	5.13	16.57
12	3.42	31.71	462.4	4.07	16.97	2.35	8.25	186.6	4.74	42.86
13	3.63	75.14	732.5	10.80	10.30	5.93	84.92	422.5	5.59	15.44
14	2.02	12.58	428.7	4.54	19.51	1.73	5.39	182.9	3.86	45.08
15	2.08	17.50	540.1	1.67	15.46	3.34	2.99	195.3	1.66	42.15
16	5.32	184.39	804.3	.39	7.99	8.04	0.00	508.3	2.14	16.63
17	3.61	71.70	727.8	10.04	10.42	7.53	73.73	409.5	7.66	16.16
18	2.64	19.68	438.8	3.25	18.56	2.44	4.75	192.5	3.55	42.73
19	2.88	61.16	518.1	7.93	14.24	4.93	54.74	376.3	6.54	18.57
20	2.53	25.23	494.8	3.25	16.36	2.67	8.28	232.6	2.95	34.93
21	4.22	118.43	707.1	7.51	9.79	5.97	62.47	360.2	4.41	18.60
22	2.79	26.53	475.8	4.76	16.86	2.82	7.17	214.2	4.06	37.86
23	3.32	98.86	477.3	2.80	13.80	8.60	63.80	532.9	5.30	13.44
24	2.40	26.83	474.6	10.54	16.93	2.91	31.63	329.9	6.57	22.83
25	1.65	9.70	585.7	5.78	14.64	1.33	5.74	241.2	4.89	34.88
26	3.30	22.54	758.9	1.99	11.03	4.64	10.72	330.1	2.48	24.54
27	3.09	54.26	638.9	11.56	12.09	4.94	57.90	377.3	7.67	18.34
28	2.72	25.79	523.2	5.11	15.51	2.49	9.60	205.8	4.18	38.79
29	3.13	98.61	439.0	3.35	14.70	7.79	46.50	441.5	4.93	16.46
30	2.32	24.41	438.2	8.77	18.34	3.11	35.82	279.2	5.86	25.70
31	2.12	28.56	618.0	6.13	13.26	1.38	4.78	260.6	6.20	32.57
32	2.78	13.62	728.3	3.08	11.70	3.82	14.34	287.4	2.10	27.56
BAG (CALC.)	2.86	44.71	584.0	7.34	13.38	3.56	30.14	301.6	5.07	24.64
BAG (ACT.)	2.72	46.00	567.0	6.98	13.70	3.48	29.69	298.8	4.86	24.90
33	.69	26.72	77.8	.05	72.76	1.52	6.68	39.2	.04	162.62
34	8.62	319.33	935.3	.57	6.06	17.83	80.96	415.4	.22	14.81
35	4.40	164.47	524.3	.38	11.14	5.66	6.20	526.6	.86	16.01
36	3.13	105.91	482.6	.44	13.47	4.60	2.78	313.7	.72	26.68
37	1.47	5.10	389.7	1.84	22.06	2.33	2.75	265.6	1.46	32.00
38	1.30	4.74	425.8	5.15	20.29	1.57	2.21	245.6	3.89	34.94
39	1.29	8.96	531.6	9.44	16.14	1.41	4.05	296.0	6.94	28.93

EMISSION RESULTS IN GRAMS PER MILE (PER MINUTE FOR IDLE)
FUEL ECONOMY IN MILES PER GALLON (PER MINUTE FOR IDLE)

APPENDIX H

LISTING OF MODAL RESULTS ON INDIVIDUAL VEHICLES

CALIFORNIA

	VEH	YEAR	MAKE	MODL	CID	VEH	YEAR	MAKE	MODL	CID
	2145	1972	FORD	TORI	302	2146	1972	FORD	MUST	250
MODE NO.	HC	CO	CO2	NOXC	FUEL ECONOMY	HC	CO	CO2	NOXC	FUEL ECONOMY
1	10.96	95.99	1151.3	16.02	6.64	2.51	86.05	1422.2	7.22	5.67
2	2.98	39.67	364.6	1.08	20.34	.86	5.25	466.6	1.25	18.58
3	11.03	154.60	1281.0	4.84	5.69	1.54	41.76	1699.3	6.01	5.01
4	6.89	52.88	802.3	8.66	9.78	.88	27.33	1035.8	4.63	8.21
5	5.99	43.98	730.9	12.13	10.84	1.68	12.02	619.6	8.00	13.79
6	3.44	9.10	264.5	3.60	30.64	.41	3.91	224.2	.69	38.31
7	8.99	182.30	883.7	7.69	7.40	3.89	146.26	715.1	5.12	9.27
8	3.59	9.59	365.0	7.71	22.67	.63	5.77	203.9	2.44	41.28
9	7.39	161.72	718.2	5.89	8.91	1.32	19.72	647.6	8.66	13.00
10	3.18	15.55	307.8	5.47	25.93	.53	4.88	257.5	1.77	33.26
11	9.04	204.36	860.2	5.59	7.34	2.96	132.08	810.3	4.63	8.64
12	3.90	14.71	280.7	6.75	28.07	.45	5.34	268.8	1.36	31.85
13	8.41	174.89	831.1	7.36	7.84	2.35	98.91	810.3	5.41	9.12
14	3.46	10.92	449.6	6.97	18.58	.63	5.56	228.0	2.49	37.17
15	2.15	9.78	327.9	2.30	25.35	1.26	5.24	331.9	1.02	25.79
16	3.41	69.60	780.7	.37	9.85	.97	9.57	939.2	1.63	9.27
17	7.28	71.19	851.0	11.21	9.00	1.49	46.17	954.1	5.60	8.60
18	4.03	14.14	345.5	4.56	23.32	.84	7.77	299.3	1.73	28.25
19	6.69	79.35	755.0	7.23	9.85	1.36	46.43	849.7	5.03	9.58
20	4.82	17.73	395.8	5.20	20.22	.89	6.62	352.8	1.54	24.25
21	9.34	207.99	875.4	6.00	7.20	4.22	166.36	830.0	4.88	8.03
22	4.23	13.99	473.6	7.48	17.44	.67	5.62	293.4	2.62	29.16
23	7.06	51.05	933.8	9.90	8.56	1.24	29.65	1139.2	5.53	7.46
24	5.46	77.87	656.5	7.66	11.15	1.42	15.88	535.8	7.31	15.70
25	3.56	10.92	427.9	9.99	19.45	.64	5.82	285.7	3.43	29.90
26	4.94	17.18	498.9	4.53	16.39	1.78	9.15	516.1	1.59	16.56
27	6.81	122.50	735.3	6.42	9.35	1.35	42.06	718.2	5.53	11.25
28	3.97	15.72	434.3	8.07	18.82	.70	5.48	312.7	2.94	27.43
29	6.00	56.72	755.4	5.48	10.28	.74	13.76	946.6	4.44	9.14
30	6.13	87.33	690.6	5.96	10.48	2.30	69.68	551.6	5.32	13.28
31	3.24	8.95	470.2	14.13	17.95	.71	5.53	303.6	3.88	28.22
32	3.45	33.05	469.1	3.02	16.68	1.57	7.44	508.9	1.82	16.89
BAG (CALC.)	5.11	62.36	590.7	7.60	12.59	1.19	27.96	513.1	4.17	15.83
BAG (ACT.)	4.90	61.68	587.9	7.15	12.67	1.25	26.42	504.7	3.82	16.13
33	.38	3.89	80.8	.08	100.78	.10	.48	101.6	.15	86.46
34	3.95	45.29	1142.4	1.13	7.24	.97	5.01	1220.6	1.28	7.21
35	2.33	15.26	750.0	.75	11.36	.37	2.26	628.6	.65	14.01
36	2.15	8.89	493.9	.75	17.24	.44	7.28	573.9	1.17	15.13
37	2.14	4.19	419.6	2.18	20.50	1.10	4.65	306.1	1.19	28.01
38	3.04	8.35	500.3	8.01	16.97	.85	4.10	326.2	2.73	26.47
39	3.08	8.49	599.1	14.11	14.26	.84	4.31	382.7	5.85	22.64

EMISSION RESULTS IN GRAMS PER MILE (PER MINUTE FOR IDLE)
FUEL ECONOMY IN MILES PER GALLON (PER MINUTE FOR IDLE)

APPENDIX H

LISTING OF MODAL RESULTS ON INDIVIDUAL VEHICLES

CALIFORNIA

	VEH	YEAR	MAKE	MODL	CID	VEH	YEAR	MAKE	MODL	CID
	2147	1972	FORD	STAW	400	2148	1972	FORD	STAW	400
MODE NO.	HC	CO	CO2	NOXC	FUEL ECONOMY	HC	CO	CO2	NOXC	FUEL ECONOMY
1	5.16	60.71	1470.5	12.98	5.61	5.35	169.72	1404.1	9.00	5.26
2	1.31	20.67	391.3	1.49	20.74	2.13	73.18	523.9	.90	13.75
3	6.96	105.89	1525.1	3.56	5.18	5.67	207.88	1715.1	6.31	4.31
4	3.17	47.60	957.3	6.50	8.52	1.64	26.96	1066.1	6.02	7.97
5	3.30	26.03	752.2	14.70	11.05	1.80	31.12	889.8	6.20	9.40
6	1.25	4.84	225.4	3.05	37.46	3.04	11.07	478.3	1.10	17.56
7	4.19	46.27	986.7	21.02	8.27	4.90	134.42	935.0	6.27	7.64
8	1.75	10.36	280.6	5.20	29.35	4.07	5.57	632.8	1.88	13.56
9	2.93	16.75	789.2	20.30	10.76	2.09	41.18	876.5	6.17	9.36
10	3.42	14.50	269.9	3.21	29.24	4.51	23.76	498.7	1.41	16.13
11	3.68	34.07	982.8	22.55	8.47	4.68	165.94	928.8	6.00	7.37
12	4.67	15.69	228.8	3.18	33.09	5.44	29.73	560.0	1.97	14.22
13	3.50	23.21	1002.5	21.59	8.45	3.88	119.15	964.5	6.93	7.62
14	2.88	12.37	288.4	5.00	28.00	3.68	12.67	604.1	2.04	13.96
15	1.18	9.38	309.9	1.31	27.03	1.14	12.05	585.2	1.35	14.60
16	5.47	63.07	646.8	1.30	11.63	4.54	193.92	573.9	.69	9.94
17	4.03	40.00	1016.6	16.93	8.13	3.48	96.35	1045.3	7.85	7.35
18	2.27	10.59	255.9	3.43	31.73	2.97	21.49	601.7	1.61	13.76
19	3.73	34.60	930.0	13.78	8.91	3.38	60.99	832.5	5.32	9.45
20	2.96	18.58	343.3	4.65	23.24	3.42	24.16	668.8	1.22	12.37
21	4.45	83.00	1065.7	17.56	7.33	5.09	163.75	977.4	7.29	7.10
22	4.44	17.08	349.5	5.21	22.73	5.22	26.31	685.3	1.87	11.94
23	4.45	54.68	1296.0	8.37	6.36	2.61	109.43	934.8	5.84	7.96
24	2.81	17.30	718.5	16.40	11.76	2.11	36.80	744.7	5.56	10.97
25	2.61	13.74	331.4	6.17	24.56	2.86	7.30	811.4	3.03	10.67
26	1.66	14.44	489.8	2.65	17.14	1.22	10.99	952.3	1.95	9.12
27	3.25	22.93	848.9	18.20	9.91	2.54	74.76	853.3	6.29	9.07
28	3.96	19.57	335.7	4.89	23.41	4.16	26.48	698.9	2.29	11.78
29	4.34	58.01	1083.4	6.75	7.47	2.76	98.06	786.4	3.95	9.35
30	3.06	18.38	790.5	18.53	10.71	2.69	51.02	687.7	4.73	11.43
31	2.51	14.19	371.8	7.73	22.08	2.07	6.35	826.1	3.19	10.53
32	1.98	24.80	477.6	1.96	16.98	2.72	24.40	968.3	1.90	8.74
BAG (CALC.)	3.06	23.09	585.3	10.37	14.06	2.79	56.15	783.2	4.02	10.08
BAG (ACT.)	2.98	21.99	576.9	9.38	14.29	2.79	55.38	772.0	3.93	10.23
33	.54	3.75	90.1	.08	90.86	.87	31.21	89.3	.05	62.90
34	5.65	33.75	1065.7	.73	7.81	10.69	388.91	1128.1	.63	5.01
35	3.05	17.57	550.9	.36	15.09	5.25	184.41	619.9	.42	9.58
36	1.75	5.26	491.9	.49	17.55	2.95	34.73	667.9	.84	12.13
37	1.27	2.54	398.5	1.63	21.84	.21	2.97	645.3	1.38	13.64
38	1.57	8.46	420.9	6.10	20.21	.36	7.15	706.1	2.50	12.35
39	1.92	18.10	521.2	10.29	15.97	.64	4.87	817.1	3.97	10.73

EMISSION RESULTS IN GRAMS PER MILE (PER MINUTE FOR IDLE)
FUEL ECONOMY IN MILES PER GALLON (PER MINUTE FOR IDLE)

APPENDIX H

LISTING OF MODAL RESULTS ON INDIVIDUAL VEHICLES

CALIFORNIA

	VEH	YEAR	MAKE	MODL	CID	VEH	YEAR	MAKE	MODL	CID
	2149	1972	MERC	MONG	400	2150	1972	OLDS	DELT	350
MODE NO.	HC	CO	CO2	NOXC	FUEL ECONOMY	HC	CO	CO2	NOXC	FUEL ECONOMY
1	2.20	40.05	1768.8	7.58	4.83	3.83	28.04	1378.4	12.25	6.19
2	1.86	66.02	468.2	.77	15.36	1.44	13.66	376.2	.49	22.07
3	4.85	99.42	1891.0	4.17	4.30	3.83	34.69	1417.6	3.21	5.98
4	2.03	31.09	1189.1	5.42	7.13	1.79	18.72	973.5	5.15	8.80
5	2.69	9.99	730.9	9.83	11.75	2.06	4.79	720.6	10.62	12.08
6	.75	22.14	328.6	1.18	24.26	3.82	6.34	268.2	1.64	30.57
7	4.11	107.89	1018.0	9.15	7.39	7.05	293.75	681.7	3.64	7.61
8	3.04	15.28	304.9	3.50	26.22	2.94	6.58	283.6	3.47	29.26
9	1.63	8.71	795.8	11.47	10.90	2.01	4.87	675.1	14.17	12.88
10	1.54	23.28	314.1	2.16	24.96	5.19	7.53	264.1	2.81	30.35
11	2.21	29.71	965.1	13.14	8.71	5.34	191.17	819.8	7.41	7.80
12	2.65	32.19	400.2	1.98	19.33	6.86	11.41	332.1	3.78	23.87
13	1.56	17.65	1038.5	12.80	8.29	3.69	47.31	971.9	14.11	8.39
14	1.65	17.82	351.0	3.06	23.10	4.45	5.65	285.6	4.28	28.76
15	1.11	19.93	430.2	.83	19.09	2.59	15.65	307.2	1.72	26.10
16	5.73	142.84	858.0	.83	8.06	2.44	27.22	1009.9	.58	8.37
17	2.34	25.30	1103.3	11.24	7.71	2.79	8.30	936.3	15.41	9.26
18	1.02	31.22	390.2	1.64	20.06	6.40	7.53	292.9	2.75	27.30
19	2.05	24.25	925.4	9.89	9.15	2.27	11.04	903.4	10.09	9.57
20	1.32	34.11	464.2	1.90	17.00	7.04	9.92	341.0	3.12	23.42
21	2.38	38.35	1197.3	12.00	7.02	9.39	397.64	756.1	2.89	6.29
22	2.30	27.38	410.8	3.23	19.25	6.08	5.02	345.5	3.56	23.82
23	1.80	51.75	1407.8	7.01	5.94	2.83	11.32	984.1	8.05	8.78
24	1.95	9.93	635.0	10.18	13.51	2.49	14.64	611.8	11.35	13.81
25	2.18	13.94	417.7	4.34	19.88	3.60	4.79	396.2	5.38	21.38
26	1.67	38.25	688.0	1.55	11.78	4.09	12.15	556.3	2.04	15.08
27	2.03	16.13	858.4	11.81	9.97	2.48	11.56	768.8	14.64	11.17
28	1.78	29.64	455.1	3.47	17.49	4.87	6.59	420.0	4.23	19.91
29	1.70	53.80	1293.9	3.89	6.41	2.24	3.88	786.9	5.78	11.09
30	1.97	9.78	744.3	9.92	11.59	3.78	104.01	588.6	6.45	11.62
31	3.15	13.15	437.4	5.34	18.96	2.60	4.36	419.6	6.05	20.42
32	1.90	55.21	676.7	1.29	11.54	3.45	10.57	496.7	1.00	16.93
BAG (CALC.)	1.94	26.36	654.9	6.51	12.64	3.64	40.36	562.8	7.24	13.92
BAG (ACT.)	2.07	27.59	677.3	6.21	12.20	3.62	41.89	560.0	6.78	13.93
33	.70	21.96	144.1	.13	49.09	.39	2.44	91.2	.06	92.16
34	7.81	223.05	1771.3	1.75	4.13	4.71	29.75	1097.5	.73	7.66
35	3.87	107.56	891.8	.87	8.27	2.38	14.31	595.1	.37	14.20
36	2.68	75.50	600.2	.51	12.20	1.69	8.15	567.2	.43	15.16
37	.99	4.27	452.6	1.09	19.19	1.37	3.23	364.0	1.16	23.77
38	1.21	5.95	445.9	1.41	19.33	1.42	3.51	401.7	4.84	21.56
39	1.96	11.23	523.3	8.82	16.22	1.13	3.32	479.4	9.13	18.18

EMISSION RESULTS IN GRAMS PER MILE (PER MINUTE FOR IDLE)
FUEL ECONOMY IN MILES PER GALLON (PER MINUTE FOR IDLE)

APPENDIX H

LISTING OF MODAL RESULTS ON INDIVIDUAL VEHICLES

CALIFORNIA

	VEH	YEAR	MAKE	MODL	CID	VEH	YEAR	MAKE	MODL	CID
	2151	1972	PLYM	DUST	225	2152	1972	PLYM	SATE	400
MODE NO.	HC	CO	CO2	NOXC	FUEL ECONOMY	HC	CO	CO2	NOXC	FUEL ECONOMY
1	5.04	80.88	715.1	6.57	10.34	1.92	76.78	1456.8	7.26	5.61
2	3.89	11.07	423.9	1.37	19.56	.42	28.38	621.2	.71	13.30
3	4.79	57.90	750.3	2.04	10.36	1.63	83.64	1939.1	2.60	4.28
4	2.83	35.01	514.7	3.77	15.34	.60	37.57	1075.4	3.21	7.81
5	2.41	26.19	475.4	4.77	16.93	.97	21.58	713.3	5.28	11.83
6	1.78	13.31	292.3	3.43	27.83	.18	6.61	345.8	1.28	24.88
7	4.51	132.98	525.1	4.49	11.86	1.35	44.32	904.3	8.39	9.07
8	1.55	17.37	393.5	6.34	20.85	.21	6.25	409.5	3.36	21.13
9	2.36	36.51	455.7	8.51	17.05	.81	18.30	710.2	9.11	11.97
10	2.87	13.93	284.6	4.93	28.13	.13	8.54	376.3	2.10	22.75
11	3.97	92.18	564.6	7.29	12.29	.95	35.70	940.9	10.00	8.88
12	3.43	13.50	303.7	5.24	26.43	.15	9.92	455.0	2.11	18.84
13	3.46	76.04	596.9	7.59	12.20	.70	33.94	958.5	8.13	8.75
14	1.92	13.88	307.7	6.01	26.45	.15	5.45	414.0	3.34	20.98
15	1.93	6.81	333.6	2.16	25.32	.15	20.72	495.5	.51	16.79
16	2.71	14.01	617.4	.56	13.70	1.16	86.72	1330.5	0.00	6.04
17	3.19	49.49	582.9	6.31	13.23	.83	34.56	1040.3	6.32	8.09
18	2.91	9.25	315.9	4.27	26.13	.36	8.56	437.8	2.60	19.62
19	2.33	38.44	496.5	3.81	15.73	.64	32.01	915.7	4.26	9.17
20	3.85	10.61	335.6	4.27	24.35	.29	12.71	555.0	1.57	15.41
21	4.60	125.58	523.2	5.78	12.07	1.29	50.19	1000.8	9.23	8.19
22	3.19	12.42	347.8	6.26	23.51	.23	9.82	479.3	3.18	17.92
23	2.90	45.29	559.5	3.69	13.87	.76	37.45	1197.1	4.14	7.05
24	1.94	33.87	432.3	5.76	18.05	.68	18.55	630.4	6.45	13.41
25	1.38	16.11	385.0	7.51	21.40	.28	6.41	422.5	4.31	20.48
26	3.64	10.65	424.5	2.99	19.60	.46	32.65	823.0	1.19	10.13
27	2.47	40.20	511.2	7.05	15.24	.60	24.80	825.2	7.50	10.25
28	3.33	12.90	350.6	6.26	23.27	.25	12.14	506.7	3.79	16.85
29	2.81	35.80	484.0	2.95	16.16	.80	48.86	1058.2	3.62	7.80
30	2.06	31.71	444.2	5.49	17.73	.70	28.95	661.6	5.66	12.51
31	1.52	17.00	446.7	8.45	18.56	.24	9.80	486.2	5.20	17.67
32	3.35	8.02	505.8	1.73	16.78	.25	26.23	626.0	.88	13.29
BAG (CALC.)	2.74	33.85	434.1	6.05	17.89	.51	20.98	652.8	5.25	12.91
BAG (ACT.)	2.77	36.98	442.6	5.86	17.42	.56	20.22	650.1	4.95	12.98
33	.36	4.02	52.0	.03	149.20	.23	13.16	170.2	.11	46.32
34	4.41	39.29	700.4	.42	11.43	2.46	146.62	2043.0	1.29	3.89
35	2.20	17.68	443.9	.42	18.54	.70	51.14	1085.7	.62	7.60
36	1.45	6.32	359.7	.56	23.72	.79	43.56	685.7	.42	11.73
37	1.44	4.90	308.9	1.96	27.64	.15	3.65	503.8	.71	17.40
38	1.53	16.23	345.9	5.47	23.59	.61	2.93	402.9	3.42	21.67
39	1.44	25.16	429.9	8.91	18.73	.37	8.77	521.3	7.38	16.55

EMISSION RESULTS IN GRAMS PER MILE (PER MINUTE FOR IDLE)
FUEL ECONOMY IN MILES PER GALLON (PER MINUTE FOR IDLE)

APPENDIX H

LISTING OF MODAL RESULTS ON INDIVIDUAL VEHICLES

CALIFORNIA

	VEH	YEAR	MAKE	MODL	CID	VEH	YEAR	MAKE	MODL	CID
	2153	1972	PONT	CATA	400	2154	1972	PONT	BONN	455
MODE NO.	HC	CO	CO2	NOXC	FUEL ECONOMY	HC	CO	CO2	NOXC	FUEL ECONOMY
1	6.51	42.81	1460.1	12.18	5.73	2.36	8.55	1309.2	4.95	6.67
2	3.86	37.65	527.5	.95	14.82	.62	4.50	571.8	.68	15.28
3	10.23	88.94	1473.9	5.42	5.39	6.80	18.66	1715.3	2.50	5.03
4	3.82	37.75	913.6	4.65	9.01	1.12	3.55	874.9	1.76	10.04
5	1.94	15.49	833.1	6.45	10.28	.88	5.02	781.6	3.30	11.20
6	3.36	12.07	325.6	5.76	24.99	1.35	3.85	378.4	1.56	22.83
7	5.06	50.64	965.8	10.69	8.36	4.48	97.13	769.7	5.38	9.48
8	2.13	8.16	576.4	10.93	14.89	2.19	4.32	435.7	3.08	19.75
9	2.52	11.29	964.1	14.75	8.97	.93	4.41	679.5	5.28	12.87
10	3.55	15.08	449.2	8.60	18.33	2.89	4.81	351.6	1.93	24.10
11	3.34	24.32	1242.7	18.91	6.87	2.55	36.14	949.3	9.32	8.75
12	4.19	19.95	458.4	10.27	17.64	3.10	5.79	400.7	2.25	21.15
13	3.04	21.35	1209.4	17.52	7.09	1.93	14.37	1015.5	9.70	8.50
14	2.93	13.00	484.1	11.65	17.27	2.56	5.99	398.9	3.09	21.31
15	3.56	36.17	481.8	2.75	16.14	1.25	4.14	484.3	.65	17.94
16	6.25	116.33	899.3	.48	8.05	2.05	8.42	1152.6	.61	7.57
17	3.42	23.41	1093.4	14.09	7.78	2.03	9.92	987.0	7.54	8.80
18	3.60	17.44	470.8	7.73	17.41	1.45	6.12	402.9	2.10	21.28
19	3.15	25.23	934.0	9.89	9.02	1.76	5.92	795.1	4.86	10.96
20	5.11	22.60	455.4	9.12	17.50	1.18	5.70	472.9	1.49	18.28
21	4.13	34.30	1273.5	18.08	6.62	4.00	70.34	1020.1	8.70	7.76
22	4.01	19.53	522.0	11.73	15.70	2.23	7.05	433.3	2.69	19.66
23	5.09	51.22	1079.6	8.83	7.55	2.55	13.98	1262.8	4.47	6.87
24	2.40	13.08	829.2	9.36	10.35	.85	4.87	695.8	5.27	12.57
25	2.61	9.18	554.2	15.13	15.39	2.72	5.22	449.1	3.94	19.05
26	3.99	38.97	573.9	3.64	13.70	1.44	6.52	871.2	1.36	10.02
27	2.70	17.36	1007.7	14.45	8.50	1.43	6.76	868.6	8.75	10.04
28	3.42	18.57	555.4	12.79	14.91	1.74	5.39	477.4	3.13	18.06
29	5.07	54.52	853.7	6.36	9.29	1.95	6.02	917.7	3.45	9.51
30	2.56	19.31	842.1	9.62	10.08	1.91	6.73	683.8	5.92	12.67
31	2.22	8.37	636.5	17.61	13.52	2.34	5.80	489.1	4.25	17.55
32	5.03	40.29	478.9	5.35	15.90	1.35	4.98	638.5	1.21	13.64
BAG (CALC.)	3.23	25.22	763.3	12.02	10.91	1.69	11.18	662.5	5.14	12.95
BAG (ACT.)	3.10	26.65	749.1	10.64	11.08	1.81	10.99	673.7	4.95	12.74
33	.86	16.61	101.3	.06	68.22	.59	.55	147.6	.14	59.03
34	10.66	196.75	1221.3	.55	5.67	4.65	8.39	1794.9	1.27	4.87
35	9.97	64.37	770.3	.46	9.83	2.68	6.63	1167.7	.64	7.48
36	4.30	45.30	570.8	.37	13.54	1.78	4.82	777.8	.43	11.22
37	1.31	6.88	495.9	1.42	17.37	.71	3.61	597.3	.60	14.66
38	1.74	3.97	531.7	9.05	16.33	1.23	3.98	432.7	2.01	20.04
39	1.04	3.96	465.3	7.54	18.69	.64	3.83	481.6	3.82	18.13

EMISSION RESULTS IN GRAMS PER MILE (PER MINUTE FOR IDLE)
FUEL ECONOMY IN MILES PER GALLON (PER MINUTE FOR IDLE)

APPENDIX H

LISTING OF MODAL RESULTS ON INDIVIDUAL VEHICLES

CALIFORNIA

	VEH	YEAR	MAKE	MODL	CID	VEH	YEAR	MAKE	MODL	CID
	2155	1972	DATS	510	71	2156	1972	TOYO	CORO	120
MODE NO.	HC	CO	CO2	NOXC	FUEL ECONOMY	HC	CO	CO2	NOXC	FUEL ECONOMY
1	2.90	61.14	461.7	1.74	15.65	3.90	54.15	613.3	7.88	12.49
2	1.11	19.99	255.7	2.01	30.54	1.40	45.08	236.8	.51	28.44
3	3.75	131.46	513.8	.34	12.12	4.85	95.11	602.5	3.44	11.57
4	1.97	41.43	303.9	.57	23.65	2.17	40.38	431.3	4.74	17.69
5	.82	3.43	321.8	2.59	26.92	1.69	14.14	388.6	9.31	21.33
6	.57	1.82	206.6	2.29	42.01	1.04	14.52	172.8	1.56	44.63
7	1.37	35.61	337.1	4.90	22.33	4.56	138.58	396.3	3.83	14.12
8	.71	1.67	235.4	5.91	36.94	1.45	6.29	253.3	4.14	33.14
9	.81	.53	302.7	4.02	28.99	1.86	26.53	380.5	9.24	20.73
10	.73	8.49	206.3	2.56	39.99	2.67	11.75	181.2	2.89	42.64
11	1.54	13.48	386.0	7.43	21.54	2.82	84.57	460.7	7.07	14.73
12	.95	10.52	257.6	4.14	32.03	4.39	12.99	211.0	3.62	36.18
13	1.80	19.11	371.0	7.57	21.82	2.80	73.05	458.6	6.42	15.24
14	.60	4.61	216.2	3.42	39.39	2.05	11.78	228.3	4.22	35.04
15	1.07	1.65	220.8	1.36	39.14	1.50	50.15	239.4	1.02	27.48
16	3.10	24.31	511.1	.52	15.87	2.51	75.68	639.4	0.00	11.58
17	1.95	28.26	388.3	5.11	20.22	2.23	43.89	466.3	6.41	16.37
18	.70	5.78	226.8	2.49	37.28	1.40	23.38	215.9	2.74	34.53
19	1.32	13.11	297.5	2.46	27.54	2.15	23.81	396.1	7.83	20.16
20	.88	10.53	253.0	2.51	32.59	1.61	28.82	285.0	2.94	26.46
21	2.72	62.08	379.4	4.57	18.28	3.79	167.43	440.7	3.11	12.40
22	1.04	12.03	234.9	4.04	34.52	2.43	16.62	266.1	4.65	29.60
23	2.46	52.76	407.1	1.20	17.83	2.70	39.69	456.4	4.58	16.83
24	.85	4.16	287.4	4.43	29.92	1.58	28.67	349.4	6.41	22.22
25	.54	2.83	240.5	3.82	35.98	1.08	9.42	305.8	6.50	27.39
26	1.45	5.55	367.3	2.48	23.32	2.29	61.61	346.8	1.77	19.68
27	1.23	14.70	349.1	6.09	23.60	1.88	28.74	410.1	7.32	19.24
28	.84	11.05	237.7	3.00	34.44	2.09	15.86	290.9	5.09	27.52
29	2.08	41.43	395.6	2.00	18.99	2.38	39.01	376.2	4.31	19.94
30	.90	3.97	295.4	4.14	29.15	1.85	40.21	345.5	5.03	21.41
31	.70	2.08	251.8	5.05	34.49	1.19	8.78	358.1	7.44	23.62
32	1.25	8.73	294.6	1.61	28.42	2.61	65.68	349.7	1.61	19.25
BAG (CALC.)	1.25	14.59	291.7	4.86	27.86	2.13	35.26	336.9	5.55	22.24
BAG (ACT.)	1.22	14.54	291.7	4.76	27.87	2.22	37.18	334.1	5.13	22.21
33	.54	15.23	57.0	.05	107.46	.44	10.66	40.8	.03	150.45
34	4.77	81.83	361.2	.19	17.58	6.03	123.90	490.9	.37	12.59
35	1.17	4.68	502.1	1.09	17.29	3.12	59.16	263.5	.18	24.23
36	1.39	6.21	303.8	.87	27.91	1.85	21.79	238.7	.31	31.83
37	.73	1.94	246.2	1.53	35.29	1.36	26.53	250.9	.59	29.89
38	.62	1.45	218.8	2.43	39.79	1.15	6.51	271.4	4.10	31.12
39	.60	1.77	257.6	4.20	33.84	1.10	5.86	342.9	8.63	24.96

EMISSION RESULTS IN GRAMS PER MILE (PER MINUTE FOR IDLE)
FUEL ECONOMY IN MILES PER GALLON (PER MINUTE FOR IDLE)

APPENDIX H

LISTING OF MODAL RESULTS ON INDIVIDUAL VEHICLES

CALIFORNIA

	VEH	YEAR	MAKE	MODL	CID	VEH	YEAR	MAKE	MODL	CID
	2157	1972	VOLK	SEDA	97	2158	1972	VOLK	SEDA	97
MODE NO.	HC	CO	CO2	NOXC	FUEL ECONOMY	HC	CO	CO2	NOXC	FUEL ECONOMY
1	9.33	65.27	537.3	2.26	13.26	13.73	120.49	575.6	3.43	10.98
2	1.08	9.26	288.0	1.11	29.00	3.94	31.62	207.8	.79	32.87
3	4.91	83.72	562.6	.75	12.51	13.07	265.04	488.0	.31	9.38
4	2.17	20.75	375.5	1.10	21.39	3.95	64.18	413.8	1.79	16.84
5	1.38	7.38	312.5	2.82	27.02	2.22	17.80	382.4	3.62	21.26
6	.60	1.71	163.3	1.87	52.85	.76	7.73	147.5	1.68	54.76
7	1.43	10.26	293.9	2.81	28.21	1.22	45.83	290.1	2.01	24.25
8	.76	4.82	208.5	4.09	40.63	.89	16.33	169.0	1.95	44.94
9	.99	5.65	324.3	3.74	26.39	1.01	29.23	352.5	3.58	22.10
10	.86	8.65	153.8	2.51	52.17	2.79	19.55	150.6	1.63	46.68
11	4.68	25.72	388.2	5.25	20.01	4.45	53.67	415.9	3.81	17.26
12	1.59	11.02	186.6	3.40	42.48	3.08	21.03	179.9	2.33	39.86
13	5.50	34.41	353.8	4.57	20.87	6.45	74.88	396.9	3.55	16.59
14	.86	6.32	192.9	3.28	43.18	1.49	15.81	187.6	2.41	40.86
15	.92	2.16	183.0	.88	46.89	1.31	20.80	198.0	.77	37.80
16	3.31	95.50	436.0	.63	14.88	4.68	109.82	409.3	.60	14.87
17	6.28	32.75	369.8	3.08	20.12	7.92	71.27	432.5	3.66	15.58
18	.88	5.41	168.4	2.18	49.40	1.31	11.13	179.2	1.32	44.19
19	3.13	16.45	354.3	1.91	22.75	3.49	42.54	401.0	3.11	18.53
20	1.28	8.59	224.9	2.29	36.61	2.84	17.60	193.2	1.45	38.62
21	6.94	40.97	335.3	3.90	21.05	6.86	73.27	367.5	3.12	17.60
22	1.83	11.00	203.0	3.97	39.25	3.22	22.35	185.2	1.91	38.50
23	6.33	47.02	388.8	1.32	18.38	9.64	109.41	444.9	2.28	13.71
24	1.79	9.41	294.1	3.30	28.21	2.09	38.99	323.4	3.16	22.68
25	1.10	8.16	249.1	5.32	33.44	.86	9.12	201.9	3.02	40.53
26	2.72	3.62	329.9	1.89	25.79	2.17	31.65	234.3	.88	30.51
27	3.60	30.08	317.4	3.72	23.60	4.67	53.70	391.8	3.49	18.08
28	1.27	10.79	253.0	4.60	32.40	3.03	22.80	185.1	2.19	38.49
29	4.52	36.95	324.3	.93	22.37	6.81	107.98	401.8	1.38	14.96
30	2.45	8.53	310.6	2.80	26.75	1.94	35.21	356.9	3.29	21.21
31	1.28	7.70	302.9	6.83	27.82	1.04	10.80	198.6	2.84	40.55
32	2.31	10.95	258.5	1.48	31.36	1.94	37.17	217.1	.86	31.52
BAG (CALC.)	2.70	20.46	273.2	3.55	28.27	3.55	43.35	285.5	2.47	24.32
BAG (ACT.)	2.73	20.58	276.0	3.47	27.99	3.59	43.21	271.6	2.44	25.30
33	.55	11.81	28.3	.02	182.47	.40	12.94	39.1	.03	146.28
34	4.80	123.36	434.6	.20	13.79	3.12	101.56	637.7	.57	11.00
35	1.40	12.41	584.0	.81	14.60	1.44	30.93	570.7	.86	14.23
36	1.23	9.12	603.7	2.11	14.27	1.04	20.21	330.1	.51	24.30
37	.73	3.34	251.0	1.15	34.33	.62	7.01	255.8	1.20	33.03
38	.76	2.36	217.4	2.22	39.71	.63	6.37	229.0	2.20	36.82
39	.89	4.56	255.0	4.29	33.50	.76	8.25	284.0	4.08	29.65

EMISSION RESULTS IN GRAMS PER MILE (PER MINUTE FOR IDLE)
FUEL ECONOMY IN MILES PER GALLON (PER MINUTE FOR IDLE)

APPENDIX H

LISTING OF MODAL RESULTS ON INDIVIDUAL VEHICLES

CALIFORNIA

	VEH	YEAR	MAKE	MODL	CID	VEH	YEAR	MAKE	MODL	CID
	1159	1971	BUIC	LESA	455	1160	1971	BUIC	SKYL	350
MODE NO.	HC	CO	CO2	NOXC	FUEL ECONOMY	HC	CO	CO2	NOXC	FUEL ECONOMY
1	10.94	46.19	1432.9	12.68	5.76	5.46	27.40	1100.0	6.51	7.65
2	5.49	63.78	372.9	1.18	18.09	4.88	33.81	502.9	.73	15.53
3	17.57	122.12	1519.6	5.03	5.02	10.72	57.12	989.4	1.56	7.97
4	6.71	39.43	938.1	6.91	8.69	2.66	34.69	828.5	3.42	9.96
5	4.69	11.24	814.4	10.45	10.48	2.95	7.50	577.5	6.64	14.83
6	3.00	20.23	222.8	2.60	33.61	3.97	13.08	232.8	1.31	33.37
7	5.26	50.43	1136.1	12.56	7.20	4.32	78.63	767.1	7.86	9.81
8	2.31	13.39	341.8	4.79	23.97	2.91	6.06	290.8	3.47	28.67
9	3.71	19.62	827.5	11.41	10.20	1.93	6.00	625.4	8.02	13.85
10	3.26	26.65	337.8	3.97	22.75	5.75	12.52	284.4	2.44	27.54
11	4.81	38.73	1116.0	13.04	7.44	2.21	12.99	899.7	10.54	9.57
12	3.64	36.44	259.0	4.48	27.08	7.27	10.77	292.4	2.72	26.70
13	4.38	23.48	1138.5	14.34	7.46	2.27	12.54	909.3	9.81	9.48
14	2.65	22.80	373.6	4.43	21.24	4.77	8.46	281.4	2.91	28.65
15	4.59	44.81	309.1	1.54	22.52	2.85	34.65	317.4	.57	23.30
16	17.45	226.85	968.4	.92	6.43	6.99	77.33	690.1	0.00	10.64
17	6.06	32.82	1072.3	13.61	7.76	2.38	14.43	945.2	7.31	9.10
18	3.59	37.19	306.7	2.87	23.57	4.85	8.12	363.8	2.10	22.64
19	5.60	32.66	1010.0	11.10	8.23	2.50	15.86	847.2	5.41	10.09
20	4.22	44.95	499.2	3.86	15.22	5.91	14.69	335.5	1.64	23.52
21	6.27	62.56	1287.8	14.59	6.31	2.96	36.00	963.3	10.16	8.62
22	3.56	32.55	339.2	5.05	22.10	6.08	13.19	308.8	2.86	25.45
23	10.24	60.33	1165.3	11.58	6.87	3.62	30.69	1038.0	4.99	8.09
24	4.38	18.46	765.2	11.31	10.98	1.87	12.09	615.4	7.73	13.86
25	2.99	19.54	338.7	5.15	23.42	3.02	8.12	340.9	3.84	24.44
26	5.56	73.09	412.6	1.45	16.28	4.79	49.13	495.2	1.23	15.10
27	4.24	20.12	916.6	13.08	9.23	1.65	9.91	788.2	7.47	10.97
28	3.44	31.05	372.4	4.37	20.54	5.79	12.94	333.7	2.72	23.83
29	10.25	52.82	1003.9	9.60	7.93	3.43	23.96	866.1	3.18	9.70
30	4.33	21.07	895.4	11.51	9.42	2.05	14.58	602.2	7.34	14.05
31	3.00	14.10	490.5	5.64	17.00	2.65	9.76	359.5	3.91	23.16
32	5.85	89.26	505.7	2.12	13.36	5.41	41.40	517.2	.92	14.81
BAG (CALC.)	4.16	31.33	636.1	8.10	12.71	3.51	16.45	543.5	5.23	15.29
BAG (ACT.)	4.19	29.71	636.1	7.59	12.75	3.49	16.23	529.5	4.98	15.68
33	2.29	19.93	100.5	.08	63.83	.90	4.96	74.1	.05	104.74
34	24.89	224.05	1227.1	.90	5.35	11.45	76.39	927.8	.56	8.19
35	12.61	117.21	604.2	.36	10.71	4.47	84.25	726.3	.46	10.17
36	6.82	39.36	653.2	.72	12.05	3.12	55.35	492.0	.36	15.07
37	3.52	13.78	373.7	1.61	21.83	2.41	29.20	351.5	.88	21.91
38	3.01	14.99	430.9	4.06	19.13	1.41	7.08	394.3	2.84	21.65
39	2.34	6.94	538.6	10.00	15.94	1.17	4.99	456.7	5.61	18.95

EMISSION RESULTS IN GRAMS PER MILE (PER MINUTE FOR IDLE)
FUEL ECONOMY IN MILES PER GALLON (PER MINUTE FOR IDLE)

APPENDIX H

LISTING OF MODAL RESULTS ON INDIVIDUAL VEHICLES

CALIFORNIA

	VEH	YEAR	MAKE	MODL	CID	VEH	YEAR	MAKE	MODL	CID
	1161	1971	CHEV	VEGA	140	1162	1971	CHEV	MONT	350
MODE NO.	HC	CO	CO2	NOXC	FUEL ECONOMY	HC	CO	CO2	NOXC	FUEL ECONOMY
1	4.64	26.52	733.7	7.41	11.23	5.79	70.04	1281.4	12.20	6.30
2	.70	2.48	369.0	1.68	23.66	2.85	30.09	324.7	.62	23.29
3	3.00	29.23	962.7	5.90	8.72	5.43	134.20	1413.7	4.81	5.41
4	1.00	18.65	570.1	3.04	14.73	3.97	36.13	865.5	10.00	9.49
5	1.39	8.44	442.2	4.52	19.30	3.76	14.99	691.2	13.41	12.21
6	.52	1.94	191.6	2.19	45.23	1.64	13.83	245.3	.87	32.60
7	2.18	47.37	463.0	4.97	16.30	6.30	159.67	815.5	8.57	8.17
8	.37	3.91	202.2	3.27	42.36	1.83	12.18	194.0	1.43	40.54
9	.90	5.95	473.7	6.65	18.27	2.96	10.99	674.9	15.95	12.65
10	.22	1.72	208.4	2.22	41.89	1.57	14.54	240.2	1.01	33.11
11	2.35	27.21	558.0	8.82	14.59	3.90	24.86	868.1	16.40	9.65
12	.34	3.83	195.9	3.02	43.73	2.00	17.65	251.1	.78	31.12
13	1.98	21.74	548.5	9.22	15.07	3.63	23.66	876.2	15.96	9.60
14	.27	1.96	203.9	2.74	42.70	1.43	11.99	242.9	2.10	33.33
15	.80	3.29	273.8	1.62	31.53	2.45	20.15	310.3	.86	25.38
16	1.49	6.62	607.9	2.53	14.25	4.82	111.76	396.1	.36	15.12
17	2.22	12.50	578.6	8.62	14.66	3.99	37.99	920.7	13.24	8.94
18	.68	2.74	220.6	2.18	39.09	1.45	9.33	268.1	.82	30.88
19	1.82	22.73	548.2	5.36	15.05	3.91	30.86	848.8	14.55	9.76
20	1.41	19.67	214.6	1.93	35.50	2.03	19.32	332.4	1.00	24.04
21	3.28	56.33	604.4	7.91	12.62	5.28	99.15	879.3	12.84	8.44
22	.51	5.93	245.9	2.85	34.55	2.12	16.72	308.6	1.62	25.98
23	2.76	18.98	636.7	6.30	13.14	4.98	56.79	986.6	10.86	8.13
24	1.72	8.85	415.2	5.97	20.42	2.98	10.78	647.1	14.17	13.18
25	.41	1.84	256.4	3.77	34.06	1.76	8.61	237.0	1.26	34.65
26	1.23	7.16	479.6	2.81	17.94	3.89	26.02	449.6	1.48	17.65
27	2.14	10.92	488.4	8.16	17.32	3.15	17.53	759.1	15.44	11.14
28	.54	6.02	268.2	2.90	31.77	1.98	14.59	286.5	1.51	28.11
29	2.77	25.78	502.1	4.12	16.10	4.10	51.15	969.0	9.02	8.35
30	1.88	24.69	344.2	5.17	22.82	3.05	15.03	691.0	16.03	12.25
31	.61	4.31	259.8	3.92	33.05	1.88	10.23	314.2	1.81	26.39
32	1.16	4.68	340.6	2.11	25.24	3.40	26.41	370.1	1.33	21.01
BAG (CALC.)	1.28	11.03	373.6	5.12	22.47	2.76	25.57	519.1	6.99	15.62
BAG (ACT.)	1.39	11.33	379.3	4.96	22.11	2.69	26.40	516.3	6.59	15.67
33	.35	.76	88.6	.55	97.69	.88	20.58	67.2	.05	86.76
34	3.82	6.49	1025.1	5.83	8.47	10.73	230.86	845.5	.39	7.14
35	1.85	3.30	520.7	2.50	16.69	4.62	88.16	719.4	.48	10.17
36	.38	2.04	372.8	.80	23.53	3.45	64.91	473.6	.39	15.13
37	.46	2.06	268.3	1.46	32.51	2.24	11.87	345.5	2.21	23.90
38	.69	3.64	277.9	2.90	31.05	1.88	10.22	373.9	4.21	22.42
39	.32	3.00	349.6	4.36	24.98	1.93	11.66	453.0	7.68	18.59

EMISSION RESULTS IN GRAMS PER MILE (PER MINUTE FOR IDLE)
FUEL ECONOMY IN MILES PER GALLON (PER MINUTE FOR IDLE)

APPENDIX H

LISTING OF MODAL RESULTS ON INDIVIDUAL VEHICLES

CALIFORNIA

	VEH	YEAR	MAKE	MODL	CID	VEH	YEAR	MAKE	MODL	CID
	1163	1971	CHEV	CAMA	307	1164	1971	CHEV	KING	400
MODE NO.	HC	CO	CO2	NOXC	FUEL ECONOMY	HC	CO	CO2	NOXC	FUEL ECONOMY
1	7.09	48.13	1130.9	11.95	7.22	4.09	58.41	1797.8	17.36	4.67
2	2.94	12.26	278.0	1.43	28.95	2.23	33.80	352.3	2.03	21.52
3	11.66	107.75	1160.8	4.22	6.49	6.27	79.19	2009.6	10.21	4.12
4	5.05	27.18	778.7	7.25	10.60	1.94	19.05	1242.9	8.12	6.94
5	2.73	5.40	672.8	8.24	12.86	2.07	11.14	1015.2	13.57	8.54
6	1.80	3.93	208.8	2.44	40.22	1.09	7.56	253.9	3.34	32.97
7	4.58	56.33	801.1	11.47	9.82	6.36	214.95	1150.3	10.48	5.88
8	1.30	3.90	209.4	3.19	40.41	2.02	8.36	244.6	5.51	33.60
9	1.83	5.21	703.6	9.44	12.37	1.99	18.77	996.3	17.16	8.60
10	3.01	10.73	220.0	2.25	36.02	1.83	14.04	248.4	3.98	32.12
11	3.07	15.58	849.2	12.89	10.05	2.47	44.89	1246.9	19.81	6.70
12	3.82	13.80	165.0	1.61	44.64	2.00	22.45	218.5	3.70	34.12
13	2.92	20.20	839.7	13.89	10.08	1.99	30.51	1312.9	19.35	6.49
14	2.61	4.44	232.0	.26	35.89	1.49	14.01	248.5	5.87	32.24
15	1.62	0.00	318.4	.49	27.43	2.29	29.79	270.0	3.08	27.39
16	7.71	51.89	510.4	.12	14.40	3.56	97.84	572.4	.82	12.04
17	3.78	19.04	850.8	12.48	9.94	2.04	25.84	1341.6	15.21	6.39
18	2.64	6.58	226.5	.21	36.20	1.61	20.40	223.8	2.95	34.00
19	3.48	21.05	782.8	11.78	10.73	1.63	17.83	1353.4	14.18	6.40
20	3.16	11.09	275.6	.15	29.29	1.87	27.97	272.3	2.89	27.55
21	3.90	47.76	903.1	15.02	8.96	3.86	89.66	1496.2	20.05	5.38
22	3.55	12.64	237.4	.37	33.05	1.83	22.64	246.1	5.53	30.87
23	5.68	52.76	903.5	9.07	8.84	3.00	48.38	1530.6	10.23	5.49
24	1.98	4.14	645.2	11.75	13.49	1.97	20.47	1000.4	15.38	8.54
25	2.42	4.29	254.2	.36	33.04	1.42	13.94	260.6	6.75	30.93
26	2.10	3.34	372.7	.96	23.08	2.66	35.93	355.7	5.20	21.10
27	2.45	12.19	736.8	12.45	11.62	1.43	18.34	1153.8	15.41	7.48
28	3.17	14.00	248.5	.54	31.64	1.78	19.58	296.4	6.32	26.67
29	5.33	43.70	736.5	10.94	10.80	2.79	46.96	1335.5	9.96	6.26
30	2.79	19.21	681.2	13.44	12.32	3.64	62.38	1062.5	15.31	7.57
31	2.03	3.63	312.3	.66	27.36	1.62	14.11	231.6	8.04	34.28
32	2.79	6.73	363.4	1.22	23.18	2.78	49.72	364.2	2.84	19.67
BAG (CALC.)	2.83	15.19	477.9	6.11	17.38	2.04	27.92	679.5	10.47	12.16
BAG (ACT.)	2.82	14.15	466.6	5.69	17.83	2.05	26.54	668.2	9.73	12.39
33	1.06	11.94	65.0	.05	101.90	.75	15.01	77.6	.08	85.73
34	13.18	136.61	800.0	.36	8.40	8.43	153.47	970.6	.55	7.17
35	6.46	43.67	578.6	.47	13.29	2.70	35.20	918.8	1.14	9.03
36	4.44	33.23	373.4	.37	20.19	1.60	15.64	663.0	1.11	12.81
37	2.09	1.99	309.8	1.72	27.77	1.86	2.82	435.4	4.15	19.91
38	1.68	2.96	349.7	4.83	24.68	1.48	6.15	464.2	7.46	18.55
39	1.30	4.27	407.9	6.87	21.20	1.06	4.75	567.6	13.73	15.34

EMISSION RESULTS IN GRAMS PER MILE (PER MINUTE FOR IDLE)
FUEL ECONOMY IN MILES PER GALLON (PER MINUTE FOR IDLE)

APPENDIX H

LISTING OF MODAL RESULTS ON INDIVIDUAL VEHICLES

CALIFORNIA

	VEH	YEAR	MAKE	MODL	CID	VEH	YEAR	MAKE	MODL	CID
	1165	1971	CHEV	MALI	327	1166	1971	CHRY	STAW	383
MODE NO.	HC	CO	CO2	NOXC	FUEL ECONOMY	HC	CO	CO2	NOXC	FUEL ECONOMY
1	6.29	60.88	1171.0	10.30	6.90	10.22	270.45	1577.5	6.33	4.36
2	1.86	33.27	327.1	.53	23.03	2.16	12.04	572.8	.69	14.83
3	9.48	115.74	1257.7	3.41	6.04	10.23	177.65	1646.8	2.32	4.53
4	3.45	18.84	875.7	5.43	9.69	6.71	128.57	1027.3	5.08	7.10
5	2.20	8.16	713.6	6.91	12.10	4.60	87.44	808.3	5.14	9.24
6	.85	11.81	232.3	.81	35.01	1.92	19.95	386.5	.98	20.94
7	4.43	112.20	827.3	8.05	8.72	8.45	348.45	965.0	3.79	5.77
8	2.14	12.37	222.8	1.27	35.64	2.23	27.91	376.6	2.44	20.76
9	2.05	12.10	708.4	8.46	12.09	4.41	110.52	859.5	6.09	8.48
10	1.18	14.26	260.6	1.37	30.95	1.76	21.28	394.0	1.75	20.50
11	3.14	22.15	872.2	11.33	9.68	8.17	309.03	1028.3	4.61	5.76
12	1.63	19.24	219.6	1.07	34.80	2.09	28.29	481.8	2.76	16.66
13	3.03	23.90	859.8	10.50	9.79	6.82	203.83	1073.8	5.62	6.27
14	1.17	14.40	276.8	1.41	29.28	1.97	32.33	417.7	2.38	18.70
15	1.19	16.60	316.6	.84	25.62	2.17	9.63	763.9	.91	11.29
16	5.16	96.66	519.6	.45	12.90	0.00	17.35	2128.2	1.84	4.12
17	3.41	28.41	842.4	9.19	9.88	7.02	161.96	1110.0	5.76	6.40
18	1.08	19.69	279.1	.84	28.31	2.11	31.21	457.5	1.19	17.29
19	3.02	20.64	781.1	7.50	10.78	5.32	114.01	895.2	5.08	8.13
20	1.27	26.07	308.2	1.00	25.13	2.45	26.52	595.0	1.27	13.77
21	4.66	106.78	898.0	8.77	8.21	9.50	391.04	987.4	3.32	5.44
22	1.97	20.25	302.6	1.41	26.05	2.60	32.81	517.1	2.90	15.38
23	5.03	60.68	983.2	6.83	8.11	7.50	136.44	1218.1	5.44	6.09
24	2.02	11.63	649.7	6.43	13.16	4.45	120.20	710.2	4.62	9.72
25	1.38	15.38	334.3	2.05	24.46	2.69	37.15	479.8	3.31	16.23
26	2.24	30.09	458.8	.83	17.30	2.97	21.28	720.5	1.01	11.63
27	2.60	21.71	712.7	8.47	11.76	5.09	117.26	927.5	6.27	7.87
28	1.37	22.36	327.5	1.77	24.18	2.56	34.29	525.3	2.45	15.11
29	4.12	53.27	811.7	4.48	9.77	6.23	123.79	1247.5	4.19	6.07
30	2.39	17.17	666.6	7.56	12.66	4.36	123.93	725.7	5.05	9.50
31	1.79	14.94	328.6	2.17	24.81	3.56	47.68	540.4	4.50	14.16
32	2.04	28.39	453.0	1.08	17.61	2.76	8.11	799.5	.81	10.81
BAG (CALC.)	2.09	24.74	528.5	4.43	15.46	4.12	93.38	709.0	3.70	10.22
BAG (ACT.)	2.17	23.62	514.5	4.30	15.89	3.88	89.39	692.1	3.59	10.50
33	.88	13.50	69.2	.05	95.23	1.05	3.62	182.1	.15	46.45
34	9.50	115.55	888.5	.56	8.07	11.67	27.64	2124.9	1.64	4.02
35	2.93	12.29	771.8	.94	11.09	6.08	15.74	1115.3	.93	7.66
36	2.19	8.59	482.9	.49	17.63	4.00	11.60	737.7	.68	11.55
37	1.16	3.14	392.1	1.07	22.15	1.84	11.23	455.1	.56	18.54
38	1.24	8.24	419.3	2.09	20.35	2.34	37.66	472.3	1.79	16.47
39	1.03	6.59	487.8	3.77	17.70	2.88	51.48	558.1	4.78	13.69

EMISSION RESULTS IN GRAMS PER MILE (PER MINUTE FOR IDLE)
FUEL ECONOMY IN MILES PER GALLON (PER MINUTE FOR IDLE)

APPENDIX H

LISTING OF MODAL RESULTS ON INDIVIDUAL VEHICLES

CALIFORNIA

	VEH	YEAR	MAKE	MODL	CID	VEH	YEAR	MAKE	MODL	CID
	1167	1971	DODG	CHAR	283	1168	1971	FORD	PINT	122
MODE NO.	HC	CO	CO2	NOXC	FUEL ECONOMY	HC	CO	CO2	NOXC	FUEL ECONOMY
1	10.20	391.48	1103.5	2.01	5.07	7.37	137.75	621.3	6.64	10.31
2	3.52	56.46	433.6	.37	16.64	7.73	104.73	120.4	.75	28.68
3	9.26	424.42	1765.6	1.47	3.61	9.11	261.27	568.7	1.38	8.80
4	5.15	144.50	895.3	1.38	7.79	4.40	123.20	367.1	4.36	15.44
5	4.37	172.26	616.2	1.25	9.85	3.81	73.54	391.3	6.37	17.10
6	2.69	14.72	264.0	.58	30.02	1.97	59.34	157.7	1.29	34.51
7	8.36	372.37	704.6	1.30	6.74	4.18	105.50	481.6	5.88	13.43
8	4.56	91.46	226.5	.41	23.07	2.79	62.43	149.8	2.31	34.56
9	7.25	324.64	573.3	1.03	8.02	3.16	62.33	385.4	6.50	17.99
10	4.85	73.13	265.2	.33	22.44	7.74	57.95	129.7	1.54	36.18
11	9.12	389.18	669.9	.98	6.77	4.44	72.29	455.3	7.47	15.22
12	10.23	71.38	203.0	.37	25.53	9.61	66.76	115.6	1.62	35.36
13	9.57	424.03	692.1	1.00	6.39	4.79	77.53	441.3	7.59	15.35
14	6.74	85.56	256.8	.40	21.51	4.94	69.49	144.4	1.70	32.97
15	1.85	32.77	344.5	.42	22.09	4.05	89.75	213.8	.54	24.14
16	12.60	186.56	459.3	.23	11.20	0.00	158.46	367.0	.25	14.41
17	8.43	349.95	777.7	1.20	6.55	5.55	89.00	442.7	7.36	14.79
18	4.49	25.44	293.7	.68	25.51	4.61	73.88	164.2	.86	30.09
19	7.03	306.05	747.7	1.28	7.09	3.70	58.42	435.4	6.84	16.47
20	6.67	47.16	364.8	.75	19.29	6.51	97.55	150.6	1.28	27.35
21	10.60	506.52	771.3	1.16	5.54	4.32	84.11	517.3	7.83	13.38
22	8.24	92.82	263.8	.34	20.37	8.03	83.01	194.1	1.42	25.36
23	11.50	334.72	1099.8	1.81	5.34	7.58	138.33	494.8	6.29	12.05
24	6.47	271.38	596.1	.92	8.51	2.91	62.95	343.4	6.25	19.66
25	7.57	130.26	290.8	.43	17.09	4.18	78.36	231.7	2.01	24.11
26	4.81	96.88	558.2	.78	12.23	7.59	98.10	238.4	.78	21.30
27	9.31	359.07	614.7	1.00	7.34	3.51	71.66	380.5	6.49	17.60
28	9.24	134.68	297.2	.34	16.49	6.77	84.63	180.0	1.50	26.53
29	7.37	173.72	959.2	1.70	7.07	7.48	127.66	445.7	4.76	13.25
30	7.59	322.62	568.3	1.02	8.07	3.16	63.44	403.2	6.89	17.30
31	8.25	175.73	331.1	.30	14.01	2.90	74.19	169.5	2.32	30.05
32	6.88	64.76	498.3	.49	14.27	7.35	112.12	215.1	.76	21.40
BAG (CALC.)	6.54	205.78	495.0	.72	10.58	5.17	82.39	284.6	3.64	20.62
BAG (ACT.)	6.72	206.51	497.9	.72	10.52	5.37	80.36	284.6	3.59	20.74
33	2.22	26.33	92.5	.03	62.97	1.24	17.51	41.4	.03	121.76
34	25.26	307.25	1149.4	.35	5.18	18.05	229.42	496.1	.19	9.71
35	8.14	128.58	638.9	.18	10.24	7.60	117.00	247.7	.19	19.48
36	4.02	57.94	544.8	.18	13.68	5.26	99.28	222.1	.19	22.48
37	.62	8.53	547.1	.52	15.78	3.49	98.57	174.9	.85	26.04
38	.81	19.57	512.9	1.17	16.25	2.74	75.76	196.6	1.74	27.36
39	4.88	236.20	416.0	.62	11.06	2.55	61.45	267.1	4.21	23.87

EMISSION RESULTS IN GRAMS PER MILE (PER MINUTE FOR IDLE)
FUEL ECONOMY IN MILES PER GALLON (PER MINUTE FOR IDLE)

APPENDIX H

LISTING OF MODAL RESULTS ON INDIVIDUAL VEHICLES

CALIFORNIA

	VEH	YEAR	MAKE	MODL	CID	VEH	YEAR	MAKE	MODL	CID
	1169	1971	FORD	TORI	302	1170	1971	FORD	MAVE	200
MODE NO.	HC	CO	CO2	NOXC	FUEL ECONOMY	HC	CO	CO2	NOXC	FUEL ECONOMY
1	4.80	117.37	1229.5	6.54	6.21	8.33	97.40	929.4	10.62	8.00
2	1.66	48.59	500.2	.66	15.25	2.92	65.91	283.1	.35	22.42
3	6.69	256.42	1564.9	3.75	4.46	11.56	229.32	939.2	2.04	6.64
4	3.03	80.02	1002.9	3.97	7.80	5.60	84.46	645.8	3.44	11.15
5	2.11	44.60	644.2	4.57	12.31	3.80	54.23	545.8	6.45	13.80
6	1.29	25.42	310.3	.53	25.04	2.85	40.28	144.0	1.22	41.03
7	4.02	162.72	808.5	4.10	8.24	5.44	138.17	667.4	9.26	9.84
8	2.31	29.97	353.1	.78	21.78	2.79	29.42	172.3	3.38	39.04
9	1.97	34.01	670.4	5.47	12.16	2.76	35.99	574.2	10.19	13.88
10	1.46	33.82	322.4	.70	23.35	2.91	34.48	179.8	1.97	36.49
11	3.48	102.95	830.9	5.84	8.84	3.62	49.29	714.3	13.00	11.05
12	2.07	37.68	321.4	.51	22.92	3.60	38.24	145.2	2.09	40.96
13	3.04	62.21	832.0	6.66	9.45	3.72	51.07	710.7	12.08	11.06
14	1.50	31.18	375.9	.70	20.66	3.69	35.05	205.4	3.18	32.61
15	.81	48.06	501.7	.63	15.31	2.67	37.37	244.4	.63	28.48
16	4.39	142.49	542.3	.71	11.38	5.79	149.89	533.7	.26	11.27
17	3.44	72.62	813.7	5.82	9.45	4.57	56.22	645.3	8.75	11.86
18	1.14	36.58	350.0	.50	21.59	3.83	48.44	159.8	1.18	35.77
19	2.49	49.73	720.4	6.08	11.01	3.78	61.68	614.0	6.37	12.28
20	1.86	36.03	375.5	.74	20.26	4.21	70.20	210.3	1.10	26.58
21	4.03	146.44	807.0	5.87	8.45	4.70	92.96	762.4	11.35	9.61
22	2.13	38.44	409.5	.70	18.62	3.73	39.78	211.8	3.12	31.02
23	4.15	110.62	1027.7	4.40	7.31	6.68	113.01	720.0	5.48	9.66
24	2.04	38.63	734.7	5.48	11.07	2.97	37.83	501.4	7.12	15.56
25	1.80	29.07	364.9	.95	21.32	2.93	30.87	261.5	4.92	27.79
26	.95	68.99	615.6	.97	12.21	3.28	43.95	371.8	1.03	19.67
27	2.46	48.62	811.4	5.88	9.91	3.21	38.00	573.4	9.51	13.80
28	1.44	41.26	392.8	1.16	19.20	3.61	42.80	270.2	3.83	25.44
29	4.03	122.39	888.5	3.25	8.12	5.39	103.88	575.0	3.12	11.75
30	2.56	72.91	710.8	5.34	10.65	3.09	46.09	518.4	7.17	14.78
31	2.72	32.97	434.1	1.47	17.95	2.86	33.77	281.2	5.98	25.85
32	1.34	66.54	611.6	1.12	12.32	3.25	58.84	385.6	.71	18.17
BAG (CALC.)	2.08	54.98	602.5	2.74	12.76	3.40	50.52	414.6	5.91	17.58
BAG (ACT.)	2.16	53.95	608.1	2.68	12.68	3.39	51.31	403.4	5.59	17.94
33	.59	14.86	97.6	.06	72.27	.84	20.10	68.0	.07	86.76
34	6.01	149.97	1230.9	.73	5.97	10.06	224.67	834.8	.81	7.28
35	2.88	65.50	717.8	.56	10.69	5.08	110.29	444.8	.39	13.99
36	1.82	49.66	723.4	.92	10.99	3.29	74.00	278.2	.20	21.92
37	1.06	26.05	592.1	1.29	13.95	2.53	35.42	268.6	.87	26.71
38	1.12	28.86	484.6	1.17	16.63	2.67	65.38	277.8	2.26	22.82
39	1.36	40.12	538.4	2.06	14.65	3.51	43.13	373.6	7.02	19.61

EMISSION RESULTS IN GRAMS PER MILE (PER MINUTE FOR IDLE)
FUEL ECONOMY IN MILES PER GALLON (PER MINUTE FOR IDLE)

APPENDIX H

LISTING OF MODAL RESULTS ON INDIVIDUAL VEHICLES

CALIFORNIA

	VEH	YEAR	MAKE	MODL	CID	VEH	YEAR	MAKE	MODL	CID
	1171	1971	FORD	CUST	351	1172	1971	FORD	RANC	351
MODE NO.	HC	CO	CO2	NOXC	FUEL ECONOMY	HC	CO	CO2	NOXC	FUEL ECONOMY
1	6.11	59.72	1284.5	10.47	6.35	71.26	169.92	1113.6	8.01	5.52
2	.96	26.41	428.2	.74	18.77	23.92	63.03	473.4	1.06	13.69
3	4.94	86.34	1692.6	4.29	4.81	83.29	259.92	1237.1	2.46	4.65
4	3.11	39.80	858.9	5.82	9.53	48.33	117.46	960.9	3.21	6.83
5	3.07	24.86	680.8	7.55	12.17	37.44	48.50	817.7	5.91	8.76
6	.52	11.13	261.7	1.09	31.60	19.27	33.77	303.8	.95	21.23
7	5.70	122.87	843.2	9.08	8.42	46.08	170.10	958.1	7.20	6.47
8	1.21	16.09	246.3	1.45	32.22	20.44	27.50	412.2	2.48	17.06
9	2.59	22.14	673.9	10.00	12.38	38.63	44.77	777.5	8.68	9.15
10	1.02	14.03	302.2	1.12	27.10	17.98	33.77	332.5	1.35	20.06
11	3.92	34.17	826.2	14.58	9.95	50.44	114.78	910.9	9.50	7.09
12	1.79	19.70	338.8	1.18	23.64	19.26	29.38	316.6	2.17	20.94
13	3.77	34.68	773.6	13.28	10.57	49.60	88.93	912.3	9.87	7.34
14	1.12	14.41	330.7	1.37	24.87	21.80	28.48	388.8	2.14	17.65
15	.53	24.64	348.8	.98	22.80	26.12	35.35	446.2	1.56	15.18
16	3.38	71.90	615.7	0.00	12.00	45.25	213.07	628.9	.71	8.02
17	4.07	41.65	832.1	10.34	9.75	47.33	94.18	907.2	7.95	7.36
18	.63	12.92	377.8	1.57	22.18	22.43	41.93	401.9	1.36	16.47
19	3.79	35.13	636.2	7.95	12.62	42.33	86.72	811.5	6.04	8.20
20	.85	16.44	399.2	1.11	20.75	27.75	51.76	452.5	1.43	14.27
21	5.78	98.13	823.6	9.84	8.91	51.45	167.33	934.5	8.44	6.52
22	1.38	18.20	366.1	1.93	22.24	25.61	39.09	407.8	2.46	16.12
23	4.36	73.48	929.4	5.03	8.38	53.08	160.23	977.6	3.83	6.35
24	2.51	24.96	603.5	7.39	13.64	34.57	49.34	591.1	6.02	11.40
25	1.22	17.23	361.9	2.30	22.60	25.64	31.53	520.8	2.94	13.62
26	.78	36.47	705.2	1.31	11.60	36.42	38.22	699.1	1.45	10.15
27	2.85	24.48	704.7	10.55	11.80	41.36	74.42	796.3	9.01	8.50
28	.90	15.87	407.6	1.68	20.38	25.87	46.24	449.3	2.16	14.69
29	3.10	50.78	827.0	3.47	9.68	47.99	161.79	790.5	2.72	7.41
30	2.88	36.08	628.2	7.51	12.79	36.27	66.80	611.5	5.51	10.67
31	1.93	14.77	390.8	2.49	21.12	28.17	36.15	576.0	3.86	12.29
32	.89	30.36	538.6	.87	15.07	38.13	74.42	670.5	1.87	9.77
BAG (CALC.)	2.04	27.53	553.4	5.20	14.72	34.01	66.48	632.1	4.69	10.51
BAG (ACT.)	2.04	24.92	559.0	4.98	14.68	33.42	70.46	629.3	4.30	10.49
33	.41	3.25	111.4	.14	75.31	4.67	20.08	71.0	.05	75.64
34	4.69	36.65	1376.4	1.50	6.13	55.51	216.12	908.9	.56	6.23
35	.74	4.77	818.4	.74	10.72	27.75	112.52	452.9	.28	12.37
36	.56	3.14	577.8	.68	15.18	20.42	36.95	408.9	.43	16.69
37	.24	2.25	461.6	.99	19.05	25.39	21.91	577.5	1.67	12.82
38	.51	5.06	413.9	1.56	20.96	24.97	31.59	548.7	2.00	13.10
39	.95	15.49	496.3	2.88	16.95	26.37	27.24	606.3	3.92	12.11

EMISSION RESULTS IN GRAMS PER MILE (PER MINUTE FOR IDLE)
FUEL ECONOMY IN MILES PER GALLON (PER MINUTE FOR IDLE)

APPENDIX H

LISTING OF MODAL RESULTS ON INDIVIDUAL VEHICLES

CALIFORNIA

	VEH	YEAR	MAKE	MODL	CID	VEH	YEAR	MAKE	MODL	CID
	1173	1971	MERC	COUG	351	1174	1971	OLDS	CUTL	250
MODE NO.	HC	CO	CO2	NOXC	FUEL ECONOMY	HC	CO	CO2	NOXC	FUEL ECONOMY
1	5.33	44.83	1024.6	14.35	7.98	6.09	110.16	970.5	10.16	7.63
2	.94	7.48	500.8	1.10	17.22	2.04	3.55	374.5	4.01	22.96
3	4.76	77.39	1290.6	5.02	6.22	4.70	53.04	1133.5	2.10	7.21
4	2.61	13.19	764.8	7.67	11.18	1.73	4.90	739.0	6.54	11.80
5	2.78	16.85	710.4	10.55	11.90	2.48	32.55	554.3	10.06	14.47
6	.76	2.97	354.2	3.05	24.57	1.10	3.23	259.7	4.75	33.09
7	2.93	13.98	876.1	14.96	9.78	4.58	160.74	657.8	9.44	9.60
8	2.46	6.96	298.6	4.15	27.97	1.09	4.41	235.3	7.75	36.12
9	2.49	11.82	671.8	13.80	12.71	2.90	68.23	528.9	9.33	13.75
10	1.62	7.97	352.3	3.52	23.99	1.31	4.02	251.4	5.35	33.89
11	3.11	14.46	817.2	16.41	10.44	3.57	103.39	689.3	10.75	10.28
12	2.29	8.46	353.5	2.97	23.73	1.80	6.18	179.1	5.75	45.62
13	3.38	15.21	855.3	15.59	9.97	3.34	92.13	665.4	11.01	10.81
14	2.31	9.21	303.7	4.08	27.26	.93	4.35	286.3	7.24	29.97
15	.72	2.72	491.6	.71	17.82	1.49	4.06	346.0	3.55	24.85
16	3.39	42.28	1121.5	.12	7.40	2.07	37.26	431.2	.93	17.88
17	3.47	17.66	860.3	12.43	9.87	2.72	43.63	712.4	11.34	11.24
18	1.44	3.95	393.8	2.81	21.94	1.76	3.66	297.5	5.02	28.73
19	2.86	14.82	729.6	9.74	11.65	2.04	17.07	655.6	10.06	12.88
20	1.12	5.56	395.5	3.44	21.76	1.73	5.86	403.6	5.42	21.22
21	3.67	44.59	901.3	13.96	9.03	4.33	143.46	722.3	11.00	9.23
22	2.17	7.35	425.9	4.28	19.98	1.54	5.57	341.2	7.08	25.01
23	3.38	24.61	965.6	7.54	8.74	2.95	33.17	742.9	10.12	11.03
24	2.30	8.70	645.4	9.83	13.32	2.13	47.28	501.9	8.23	15.22
25	2.25	9.11	337.4	6.75	24.73	1.03	5.00	297.9	9.23	28.72
26	1.35	4.95	599.5	2.48	14.51	2.11	3.55	489.7	4.98	17.68
27	2.78	11.55	731.9	12.83	11.70	2.16	36.35	586.5	11.59	13.64
28	2.56	10.47	403.4	5.28	20.74	1.28	4.14	316.4	6.99	27.15
29	2.95	42.06	819.4	4.80	9.92	2.10	29.71	683.7	7.45	12.04
30	2.11	8.88	619.6	9.05	13.86	2.47	58.26	498.0	7.98	14.86
31	2.23	9.69	398.9	7.44	21.07	1.36	4.45	265.9	10.94	32.02
32	1.54	4.10	601.9	1.83	14.47	1.93	6.17	579.8	5.52	14.90
BAG (CALC.)	2.28	12.39	570.4	8.18	14.86	1.99	31.13	443.3	8.44	17.80
BAG (ACT.)	2.23	12.88	559.0	7.46	15.14	2.03	30.62	432.1	8.11	18.24
33	.54	10.71	87.3	.08	83.86	.37	3.34	50.1	.03	157.06
34	6.05	120.59	1084.6	.79	6.86	4.42	33.93	656.1	.37	12.27
35	2.33	30.62	703.5	.68	11.69	2.50	19.36	412.0	.29	19.71
36	1.48	16.45	489.2	.45	17.07	1.63	3.31	380.1	.50	22.73
37	.75	2.61	415.1	1.10	21.05	1.43	1.30	283.7	2.81	30.57
38	1.49	6.52	424.7	6.67	20.19	1.55	3.72	312.7	6.39	27.44
39	1.88	12.51	509.2	9.12	16.59	1.22	3.50	378.1	12.73	22.91

EMISSION RESULTS IN GRAMS PER MILE (PER MINUTE FOR IDLE)
FUEL ECONOMY IN MILES PER GALLON (PER MINUTE FOR IDLE)

APPENDIX H

LISTING OF MODAL RESULTS ON INDIVIDUAL VEHICLES

CALIFORNIA

	VEH	YEAR	MAKE	MODL	CID	VEH	YEAR	MAKE	MODL	CID
	1175	1971	PLYM	DUST	225	1176	1971	PONT	LEMA	350
MODE NO.	HC	CO	CO2	NOXC	FUEL ECONOMY	HC	CO	CO2	NOXC	FUEL ECONOMY
1	5.53	59.41	477.1	12.80	15.09	6.49	46.69	1174.4	12.58	7.00
2	2.09	21.99	221.5	.85	33.79	4.22	63.42	247.1	.29	24.64
3	7.13	99.65	670.1	7.30	10.45	10.55	118.36	1199.0	4.28	6.26
4	3.45	29.34	377.4	8.67	20.43	4.53	23.17	834.2	6.70	10.03
5	2.68	24.53	399.5	10.19	19.87	2.76	8.83	709.4	6.52	12.12
6	1.54	7.22	226.4	1.56	36.58	2.84	20.62	172.1	1.04	41.57
7	3.85	105.95	488.0	7.99	13.31	3.22	21.48	911.7	12.62	9.29
8	1.16	9.06	240.8	2.53	34.31	2.72	16.14	207.0	2.44	36.82
9	2.07	9.67	407.0	13.99	20.70	2.14	6.70	695.2	10.65	12.46
10	2.64	11.26	189.8	2.03	41.12	3.60	22.06	196.7	2.99	36.55
11	3.02	53.80	518.8	12.38	14.48	2.86	13.39	841.2	13.46	10.19
12	3.44	15.28	201.5	1.73	37.53	4.53	27.45	196.4	1.72	34.96
13	2.92	30.97	482.4	13.31	16.42	2.91	13.51	887.2	13.27	9.67
14	2.53	11.66	214.1	2.90	36.91	3.05	17.85	215.5	2.91	35.06
15	1.82	15.34	212.6	.98	36.61	2.82	39.19	181.9	1.04	35.16
16	4.09	62.40	450.2	1.94	15.81	8.59	117.97	565.1	1.74	11.41
17	3.67	49.23	486.7	10.36	15.42	3.49	16.40	912.0	11.21	9.35
18	2.21	8.06	274.9	2.83	30.12	3.41	26.49	206.1	1.45	34.33
19	3.07	27.55	353.1	10.40	21.85	3.30	16.61	852.9	10.44	9.98
20	2.63	12.93	256.7	2.67	31.10	4.17	33.15	234.8	1.68	29.58
21	4.63	150.59	493.5	7.68	11.92	3.39	15.83	980.2	15.70	8.74
22	2.83	12.31	248.7	3.04	32.04	4.22	27.47	229.2	2.57	31.06
23	4.89	58.42	455.0	10.19	15.78	5.86	39.14	1014.3	9.24	8.11
24	2.33	24.67	327.2	8.44	23.78	2.31	11.12	681.0	8.50	12.57
25	2.15	8.13	276.4	4.45	29.98	3.28	14.97	249.3	3.66	31.34
26	2.27	6.38	420.3	4.07	20.28	4.72	54.28	310.3	1.03	21.62
27	3.48	22.61	428.6	10.03	18.68	2.82	12.23	740.4	12.06	11.55
28	2.56	14.75	285.0	3.56	28.06	3.72	25.78	287.1	2.97	26.15
29	5.55	16.37	336.5	5.59	23.36	5.37	40.94	828.0	7.26	9.76
30	2.65	11.62	346.2	7.39	23.81	2.47	9.81	750.6	9.20	11.47
31	1.89	9.89	341.0	5.02	24.48	3.29	12.82	222.6	4.97	35.06
32	2.83	30.93	386.9	2.76	19.97	4.87	48.05	325.3	.77	21.32
BAG (CALC.)	2.62	27.26	348.2	6.35	22.22	3.14	23.27	494.7	6.59	16.40
BAG (ACT.)	2.56	28.80	342.6	5.93	22.42	3.15	22.44	483.5	6.19	16.78
33	.46	8.65	45.8	.03	145.90	1.54	22.54	58.2	.03	90.05
34	5.59	111.35	549.6	.38	11.96	21.79	274.77	733.4	.19	7.19
35	3.59	62.47	378.3	.37	18.19	7.95	118.69	581.4	.27	11.19
36	2.62	43.29	258.5	.31	26.51	6.20	70.61	380.5	.18	17.36
37	1.74	12.03	252.0	2.17	32.10	2.74	39.13	312.4	.57	23.20
38	1.40	5.44	279.3	4.72	30.36	1.18	2.89	392.1	2.50	22.17
39	1.33	11.86	316.8	6.73	26.13	1.58	4.16	434.6	8.50	19.89

EMISSION RESULTS IN GRAMS PER MILE (PER MINUTE FOR IDLE)
FUEL ECONOMY IN MILES PER GALLON (PER MINUTE FOR IDLE)

APPENDIX H

LISTING OF MODAL RESULTS ON INDIVIDUAL VEHICLES

CALIFORNIA

	VEH	YEAR	MAKE	MODL	CID	VEH	YEAR	MAKE	MODL	CID
	1177	1971	PONT	GRNP	350	1178	1971	DATS	510	97
MODE NO.	HC	CO	CO2	NOXC	FUEL ECONOMY	HC	CO	CO2	NOXC	FUEL ECONOMY
1	5.34	159.00	1584.7	9.48	4.79	7.18	71.31	533.4	15.45	13.28
2	4.38	106.72	479.7	.40	13.42	2.17	7.50	209.5	.24	38.90
3	10.53	477.47	1470.7	2.33	3.94	5.52	109.26	741.3	16.55	9.54
4	2.49	72.57	1119.4	5.28	7.15	2.95	29.01	421.4	11.70	18.63
5	2.53	35.58	789.3	12.09	10.40	2.22	13.87	358.4	11.95	22.92
6	8.83	33.01	351.8	1.23	20.56	.85	2.39	163.8	1.90	52.14
7	4.48	98.23	921.0	11.25	8.15	2.56	61.62	383.5	8.03	18.17
8	2.79	12.52	342.9	2.35	23.90	1.06	3.00	172.3	3.70	49.20
9	2.20	22.01	781.5	12.52	10.78	1.62	4.59	368.2	17.62	23.32
10	3.63	26.70	374.8	2.12	20.72	.80	3.01	168.2	2.55	50.59
11	3.08	40.27	941.3	14.36	8.75	2.97	55.92	428.4	12.97	16.88
12	5.32	36.59	365.4	2.14	20.18	1.31	3.47	147.9	1.75	56.35
13	2.96	48.13	994.5	14.08	8.22	2.86	39.07	412.9	15.25	18.36
14	3.90	19.16	374.7	2.98	21.28	1.09	4.09	197.4	4.19	42.83
15	2.94	62.26	441.5	.62	16.18	1.18	3.75	195.6	1.71	43.24
16	6.83	265.99	967.7	0.00	6.31	2.90	18.83	436.6	1.05	18.67
17	2.79	56.62	1013.4	12.42	7.99	3.57	44.41	410.0	12.49	18.07
18	4.17	49.76	376.9	2.01	18.95	1.01	4.64	177.8	1.95	47.14
19	2.84	64.27	915.1	10.67	8.66	2.18	17.23	404.6	14.93	20.24
20	6.55	81.00	417.7	1.73	15.69	1.03	4.70	202.5	2.68	41.64
21	4.46	133.95	999.4	9.78	7.25	3.69	71.01	410.2	7.46	16.64
22	6.57	47.46	398.0	2.67	17.99	1.39	6.18	206.2	2.98	40.28
23	4.20	140.24	1008.8	6.40	7.14	3.69	38.52	485.7	12.38	15.91
24	2.53	33.96	714.3	11.71	11.44	1.73	9.81	340.9	13.40	24.53
25	1.94	8.82	414.9	4.11	20.41	1.19	4.74	219.8	5.04	38.43
26	3.95	95.70	494.4	1.37	13.50	1.84	11.90	265.8	3.19	30.57
27	2.40	38.14	826.7	12.54	9.92	2.32	17.26	380.2	15.47	21.40
28	4.25	37.20	447.2	3.34	17.10	1.11	4.72	203.4	4.66	41.40
29	3.94	143.81	991.3	4.89	7.22	3.17	30.49	442.2	10.75	17.75
30	2.82	48.27	773.6	11.33	10.34	1.67	19.35	349.6	10.15	23.04
31	1.33	10.87	472.2	4.65	17.98	1.34	6.25	224.7	5.50	37.17
32	4.67	98.26	459.4	.99	14.12	1.25	6.28	236.1	2.55	35.51
BAG (CALC.)	3.59	54.31	619.7	6.57	12.39	1.78	16.23	296.4	8.19	27.09
BAG (ACT.)	3.54	55.10	622.5	5.97	12.32	1.79	16.43	293.6	7.86	27.30
33	1.36	53.19	90.6	.46	49.74	.10	1.21	33.3	.02	250.08
34	17.01	577.69	1182.1	.59	4.14	2.39	74.68	589.8	.19	12.42
35	7.32	286.87	581.5	.30	8.41	1.17	12.48	436.3	.96	19.31
36	4.06	170.09	550.6	.33	10.68	1.11	10.85	297.4	.91	27.91
37	2.53	54.07	393.6	.72	18.24	.59	3.94	192.6	1.28	44.23
38	1.27	11.24	501.0	3.40	16.98	1.14	4.71	201.9	5.82	41.69
39	.90	5.56	599.1	7.25	14.53	1.13	3.10	259.0	9.03	33.19

EMISSION RESULTS IN GRAMS PER MILE (PER MINUTE FOR IDLE)
FUEL ECONOMY IN MILES PER GALLON (PER MINUTE FOR IDLE)

APPENDIX H

LISTING OF MODAL RESULTS ON INDIVIDUAL VEHICLES

CALIFORNIA

	VEH	YEAR	MAKE	MODL	CID	VEH	YEAR	MAKE	MODL	CID
	1179	1971	TOYO	CORO	113	1180	1971	VOLK	SQUA	97
MODE NO.	HC	CO	CO2	NOXC	FUEL ECONOMY	HC	CO	CO2	NOXC	FUEL ECONOMY
1	4.46	125.25	649.5	8.35	10.31	6.89	129.33	510.6	5.59	12.06
2	2.12	61.17	221.5	1.20	27.37	1.21	16.42	141.1	.78	52.00
3	6.43	188.46	523.6	1.06	10.56	6.15	84.10	592.7	5.12	11.92
4	2.73	56.53	364.9	6.91	19.20	2.28	29.68	387.1	5.26	20.13
5	2.09	26.90	421.6	9.76	18.86	1.65	19.68	327.0	6.03	24.44
6	1.20	15.22	161.6	3.74	46.88	.60	6.75	123.6	1.46	65.22
7	2.73	74.53	433.6	7.19	15.87	1.20	54.17	287.5	2.93	23.58
8	.76	4.97	222.1	7.29	38.20	.82	6.77	133.3	2.73	60.57
9	1.24	7.69	433.5	13.00	19.75	1.51	66.73	290.1	3.56	22.20
10	1.60	10.19	149.8	4.37	51.94	1.47	10.07	111.7	1.93	67.13
11	2.70	113.63	459.8	5.61	13.72	2.76	78.43	346.7	4.20	18.54
12	2.00	12.35	159.4	5.48	47.94	1.56	10.60	147.3	2.16	52.53
13	2.78	116.27	462.1	5.71	13.58	3.33	79.32	366.0	4.45	17.71
14	1.36	11.68	171.5	5.89	45.72	1.26	8.53	122.4	2.15	63.50
15	6.26	62.02	102.5	1.77	40.38	1.15	2.67	198.9	.84	42.93
16	3.97	125.17	425.7	.25	13.98	3.23	24.45	362.4	.36	21.59
17	2.63	59.96	509.2	9.85	14.51	4.35	72.11	379.1	5.25	17.53
18	1.46	19.11	181.2	3.66	41.12	1.16	7.53	123.1	1.12	64.04
19	2.45	49.01	442.4	8.28	16.83	2.36	46.43	347.7	5.21	20.73
20	1.62	18.00	202.8	4.33	37.56	1.47	8.84	152.2	1.50	51.97
21	2.43	74.30	386.1	6.57	17.38	3.73	81.48	325.0	3.54	19.09
22	1.86	17.29	164.8	5.19	44.87	1.81	9.95	130.5	1.81	58.43
23	3.33	99.15	449.4	5.88	14.41	4.31	49.96	467.8	6.28	15.85
24	1.61	22.30	389.5	10.75	20.65	1.63	35.38	304.2	4.43	24.32
25	1.18	5.44	190.1	7.50	43.86	1.05	8.11	155.2	2.82	51.82
26	5.40	70.51	266.6	2.75	22.50	1.59	5.61	223.5	1.16	37.39
27	1.93	56.03	405.8	9.05	17.75	2.74	63.88	336.8	5.27	19.90
28	1.94	18.22	195.4	6.23	38.55	1.23	10.50	152.7	2.24	51.28
29	2.88	109.51	416.6	4.63	14.85	4.20	33.69	403.3	6.33	18.90
30	2.23	70.63	367.3	5.89	18.29	1.52	28.43	287.0	4.37	26.38
31	1.11	7.82	208.8	9.50	39.51	.78	6.90	165.3	3.40	49.68
32	4.09	76.01	248.4	1.57	23.31	1.23	9.72	223.7	.96	36.55
BAG (CALC.)	1.93	40.77	308.3	7.00	23.45	1.97	32.67	241.9	3.52	29.63
BAG (ACT.)	2.08	41.09	302.7	6.54	23.74	2.01	33.18	239.1	3.44	29.82
33	.56	17.99	44.2	.03	119.50	.43	5.17	28.3	.02	235.14
34	6.42	206.90	550.3	.39	9.91	4.21	54.22	301.9	.18	22.17
35	3.27	105.18	284.3	.19	19.30	3.82	107.86	377.2	.36	15.88
36	2.32	70.84	183.3	.13	29.39	1.32	13.32	282.2	.42	28.88
37	4.99	44.55	192.4	1.55	31.90	.77	10.04	210.1	1.24	38.87
38	1.18	16.48	237.6	5.24	33.22	.75	6.76	204.9	3.16	40.15
39	.73	1.53	305.1	11.60	28.64	.72	3.47	249.7	7.10	34.48

EMISSION RESULTS IN GRAMS PER MILE (PER MINUTE FOR IDLE)
FUEL ECONOMY IN MILES PER GALLON (PER MINUTE FOR IDLE)

APPENDIX H

LISTING OF MODAL RESULTS ON INDIVIDUAL VEHICLES

CALIFORNIA

	VEH	YEAR	MAKE	MODL	CID	VEH	YEAR	MAKE	MODL	CID
	0181	1970	AMC	GREM	232	0182	1970	BUIC	ELEC	455
MODE NO.	HC	CO	CO2	NOXC	FUEL ECONOMY	HC	CO	CO2	NOXC	FUEL ECONOMY
1	5.38	66.16	821.3	6.49	9.42	8.06	67.11	1418.7	16.81	5.73
2	1.12	17.62	259.1	.56	30.57	3.74	48.21	452.8	.54	16.42
3	3.95	73.17	799.5	1.86	9.57	10.26	127.38	1329.2	6.22	5.68
4	2.96	34.92	691.5	3.83	11.74	5.86	51.73	876.3	9.99	9.09
5	1.63	8.38	428.5	4.81	19.86	4.02	27.63	821.3	11.86	10.12
6	1.67	9.38	185.1	.76	43.27	2.14	21.56	240.1	1.97	31.61
7	2.23	15.71	573.5	9.41	14.66	5.34	31.44	941.7	18.33	8.80
8	1.37	4.38	216.9	1.57	38.90	2.49	15.19	394.5	2.48	20.82
9	.97	4.76	462.5	6.76	18.76	3.94	16.16	767.8	14.26	11.02
10	2.98	3.65	202.1	1.04	40.84	3.51	21.09	329.8	1.81	23.73
11	2.19	33.79	538.2	8.07	14.84	5.18	26.24	959.0	19.23	8.73
12	3.64	4.69	194.3	1.21	41.63	4.36	24.74	297.6	1.72	25.34
13	2.15	26.87	576.6	7.60	14.19	5.52	33.04	982.3	18.43	8.44
14	1.90	3.12	210.3	1.55	40.12	3.03	15.92	409.6	2.71	19.98
15	1.03	4.26	227.0	.72	37.46	3.54	65.38	362.3	.54	18.63
16	1.79	28.83	542.8	1.20	14.95	0.00	139.65	814.4	.69	8.59
17	3.02	37.91	580.5	6.62	13.66	6.49	43.36	1009.9	16.42	8.08
18	2.41	8.99	191.9	.92	41.55	3.28	26.76	377.9	1.51	20.63
19	2.26	29.72	537.5	5.14	15.01	8.74	39.56	920.7	14.44	8.78
20	3.17	11.61	235.6	1.09	33.63	4.43	30.45	362.1	1.55	20.93
21	3.48	72.86	616.7	6.98	11.96	6.63	46.36	1111.6	20.54	7.36
22	3.43	6.68	213.5	1.43	37.79	4.10	24.07	360.5	2.98	21.58
23	3.64	40.54	679.3	4.00	11.76	8.29	72.76	1185.3	12.57	6.69
24	1.18	5.18	432.4	5.77	19.98	4.31	29.19	675.1	14.03	12.08
25	1.18	4.00	288.0	1.77	29.78	3.48	18.58	435.9	3.14	18.64
26	1.61	8.10	340.6	1.11	24.76	4.28	83.50	530.8	.56	13.14
27	2.38	29.15	481.9	6.36	16.58	4.93	30.28	863.4	15.85	9.58
28	2.98	4.14	257.7	1.59	32.43	3.72	27.32	407.2	2.56	19.21
29	3.05	40.10	646.3	3.36	12.34	6.59	63.72	983.3	8.87	8.04
30	1.33	5.24	452.7	6.51	19.08	4.92	31.97	671.3	14.93	12.04
31	1.00	3.42	247.6	2.11	34.65	3.89	20.87	489.6	3.01	16.60
32	2.18	9.53	303.5	1.14	27.27	3.48	69.02	591.3	.76	12.49
BAG (CALC.)	1.96	13.23	384.5	3.67	21.57	4.05	31.76	629.8	8.07	12.82
BAG (ACT.)	1.97	12.82	373.3	3.53	22.20	4.01	31.14	654.9	7.91	12.39
33	.35	4.93	51.6	.03	146.73	.69	12.27	112.1	.08	66.45
34	4.97	73.97	583.6	.38	12.40	7.96	135.38	1294.7	.74	5.79
35	3.63	54.54	609.4	.66	12.56	4.12	58.49	720.2	.45	10.76
36	1.29	21.77	694.7	1.40	12.11	4.63	60.16	580.2	.53	12.87
37	1.03	9.54	263.1	.79	31.54	2.70	32.09	436.3	1.07	17.92
38	.62	6.12	307.0	1.61	27.86	2.07	15.74	492.1	3.60	16.96
39	.16	1.97	385.5	2.97	22.81	2.03	17.56	549.4	6.49	15.21

EMISSION RESULTS IN GRAMS PER MILE (PER MINUTE FOR IDLE)
FUEL ECONOMY IN MILES PER GALLON (PER MINUTE FOR IDLE)

APPENDIX H

LISTING OF MODAL RESULTS ON INDIVIDUAL VEHICLES

CALIFORNIA

	VEH	YEAR	MAKE	MODL	CID	VEH	YEAR	MAKE	MODL	CID
	0183	1970	CHEV	NOVA	250	0184	1970	CHEV	CAME	307
MODE NO.	HC	CO	CO2	NOXC	FUEL ECONOMY	HC	CO	CO2	NOXC	FUEL ECONOMY
1	5.86	58.74	457.5	14.57	15.62	5.83	38.34	931.5	11.33	8.79
2	2.15	39.18	324.7	.89	22.58	2.44	18.26	293.2	1.19	26.92
3	7.22	143.45	452.0	5.12	12.67	7.97	92.04	1008.3	5.00	7.53
4	3.30	36.99	485.5	6.75	16.02	3.73	23.89	631.4	5.60	13.04
5	2.94	6.48	448.5	11.71	18.96	2.86	9.65	486.5	8.61	17.38
6	.86	11.11	224.6	.66	36.26	1.77	6.28	192.7	1.49	42.63
7	4.23	79.59	572.2	12.30	12.49	3.29	15.53	757.0	14.95	11.21
8	1.16	5.57	306.0	2.52	27.87	2.08	9.56	272.0	2.34	30.22
9	2.64	14.97	475.1	12.87	17.50	2.28	8.00	545.5	11.08	15.70
10	1.46	17.08	206.8	.89	37.25	2.69	12.78	209.4	1.40	37.29
11	3.60	36.31	564.0	14.00	14.03	3.00	11.78	718.4	15.14	11.89
12	2.11	22.21	311.6	.88	25.13	3.10	18.33	214.1	1.98	35.12
13	3.45	30.12	562.8	13.60	14.29	3.12	12.97	743.7	15.16	11.47
14	1.20	10.32	243.1	1.64	33.74	2.19	12.56	228.7	2.54	34.76
15	.93	14.39	291.0	.56	28.04	2.35	9.13	211.1	.98	38.11
16	4.64	147.27	525.0	.48	11.51	4.63	72.35	471.3	1.33	14.80
17	3.84	29.39	570.5	13.33	14.11	3.47	23.42	724.8	11.73	11.49
18	1.28	20.33	269.8	1.27	29.03	1.90	10.88	222.1	1.51	36.19
19	2.85	23.74	400.7	10.70	19.85	3.20	18.63	698.0	10.40	12.04
20	1.66	28.95	288.2	1.31	26.18	2.63	19.81	220.8	1.76	34.11
21	4.13	69.30	564.0	11.83	12.94	3.55	19.30	836.0	17.13	10.11
22	1.76	20.30	314.0	1.59	25.25	3.14	12.77	247.1	1.89	32.03
23	3.81	53.58	526.1	7.59	14.26	3.95	36.98	818.3	9.06	9.98
24	2.09	11.14	370.1	9.92	22.51	2.05	8.48	533.0	9.63	16.05
25	1.10	6.94	353.6	2.26	24.12	1.74	10.81	230.8	3.11	35.04
26	1.65	24.12	386.1	.93	20.68	3.16	24.30	388.2	1.42	20.34
27	2.72	22.06	514.8	12.20	15.90	2.67	11.80	618.5	11.65	13.75
28	1.57	19.10	311.1	1.64	25.64	2.65	15.60	260.9	2.65	30.21
29	3.25	53.52	498.3	5.07	14.97	4.54	29.42	710.7	6.07	11.51
30	2.21	14.43	415.4	9.38	19.94	1.80	7.97	580.0	11.16	14.84
31	.67	4.78	352.2	2.52	24.53	1.68	13.46	268.1	4.75	30.13
32	1.86	28.07	416.9	.96	19.01	2.81	27.86	372.8	1.50	20.86
BAG (CALC.)	2.12	24.58	403.2	5.82	19.79	2.54	15.81	444.1	6.52	18.61
BAG (ACT.)	2.19	24.34	406.0	5.40	19.67	2.54	14.97	449.7	6.43	18.44
33	.75	21.41	50.8	.03	102.22	.85	10.75	74.1	.08	94.72
34	8.68	248.59	628.9	.39	8.48	9.86	94.57	966.3	.79	7.74
35	3.85	89.13	427.6	.27	15.30	5.25	66.36	566.6	.37	12.91
36	2.65	49.61	310.9	.24	22.34	3.81	45.98	378.4	.31	19.18
37	1.64	1.49	253.3	2.14	34.02	1.69	3.25	330.0	1.35	26.06
38	1.38	2.07	288.9	5.10	29.93	1.30	3.03	352.2	2.73	24.58
39	1.09	3.10	343.4	6.83	25.23	1.44	12.38	403.3	5.18	20.77

EMISSION RESULTS IN GRAMS PER MILE (PER MINUTE FOR IDLE)
FUEL ECONOMY IN MILES PER GALLON (PER MINUTE FOR IDLE)

APPENDIX H

LISTING OF MODAL RESULTS ON INDIVIDUAL VEHICLES

CALIFORNIA

	VEH	YEAR	MAKE	MODL	CID	VEH	YEAR	MAKE	MODL	CID
	0185	1970	CHEV	IMPA	350	0186	1970	CHEV	IMPA	350
MODE NO.	HC	CO	CO2	NOXC	FUEL ECONOMY	HC	CO	CO2	NOXC	FUEL ECONOMY
1	5.75	55.42	1217.1	16.28	6.71	6.54	81.58	1228.2	14.56	6.44
2	2.24	15.31	345.2	3.42	23.58	4.09	39.91	352.4	1.48	20.73
3	6.53	99.26	1460.5	5.45	5.42	11.93	243.04	1237.6	3.73	5.36
4	3.17	17.79	817.6	9.26	10.37	4.93	21.06	787.5	9.30	10.61
5	3.74	14.22	728.8	15.49	11.63	3.79	10.78	670.4	14.20	12.69
6	2.55	6.29	186.0	5.59	43.51	2.81	10.55	259.7	2.55	31.12
7	4.81	100.97	859.2	14.19	8.59	5.66	107.81	824.4	11.05	8.77
8	2.99	7.83	377.5	6.73	22.23	2.53	8.13	233.5	4.45	34.90
9	3.07	9.88	711.0	17.97	12.06	3.91	12.67	677.5	15.22	12.50
10	3.19	12.21	231.2	4.02	34.07	4.08	20.27	251.5	2.99	29.95
11	3.62	15.29	877.6	20.20	9.72	4.70	29.27	841.2	15.50	9.84
12	3.92	16.42	228.8	5.95	33.23	5.67	24.77	217.8	2.81	32.30
13	3.70	16.97	873.1	19.02	9.74	4.53	34.65	870.0	14.77	9.45
14	3.12	7.75	251.7	5.70	32.43	4.45	12.77	254.6	4.47	30.73
15	1.76	9.48	354.4	3.63	23.68	3.57	21.60	285.8	2.05	26.81
16	4.00	75.22	376.2	1.37	17.50	5.84	152.26	874.7	.64	7.84
17	4.13	23.53	884.8	16.57	9.49	4.84	37.91	877.4	13.80	9.32
18	2.85	11.23	244.0	3.61	32.79	3.78	19.85	267.9	2.97	28.53
19	3.39	25.13	796.4	12.06	10.48	4.57	26.09	805.0	11.68	10.31
20	4.08	14.74	290.3	5.99	27.19	4.88	28.22	230.3	3.52	30.59
21	4.07	33.53	952.7	18.73	8.72	5.44	78.29	931.6	12.18	8.28
22	3.59	14.12	264.7	4.37	29.76	5.12	25.45	239.6	4.14	30.01
23	5.20	51.41	965.4	10.77	8.35	5.13	66.50	948.5	10.40	8.30
24	3.18	11.15	599.8	15.49	14.14	3.44	18.01	648.3	12.28	12.91
25	3.35	9.75	273.6	8.25	29.63	3.75	14.35	368.9	5.98	22.00
26	3.66	12.24	543.0	5.32	15.47	5.15	44.59	507.4	2.66	14.95
27	3.35	19.15	717.8	16.58	11.70	3.93	25.97	726.2	12.83	11.39
28	3.47	14.46	328.7	5.51	24.49	4.64	24.06	316.5	5.08	24.05
29	4.37	41.36	804.0	8.35	10.05	4.29	62.12	909.9	6.59	8.69
30	3.43	15.27	618.2	15.83	13.59	3.95	25.61	667.2	11.87	12.33
31	3.62	8.83	431.0	7.86	19.45	3.05	10.34	273.9	6.85	29.61
32	3.06	15.80	477.7	3.60	17.33	4.24	48.62	364.1	2.05	19.55
BAG (CALC.)	3.11	18.39	513.5	10.38	16.07	4.08	30.54	510.1	8.42	15.54
BAG (ACT.)	3.05	17.92	510.7	9.66	16.18	3.96	28.78	504.5	7.95	15.78
33	.43	5.66	86.8	.06	91.45	.91	25.19	75.0	.05	75.56
34	4.72	64.04	1061.9	.94	7.54	11.62	303.58	939.2	.57	6.11
35	1.02	6.83	782.6	.84	11.14	4.51	60.17	833.9	.66	9.41
36	.72	2.24	572.8	.68	15.34	2.87	26.87	573.8	.51	14.20
37	1.80	1.82	336.7	4.39	25.71	2.19	1.98	349.5	2.31	24.69
38	2.07	3.57	382.7	8.70	22.48	2.06	2.25	362.9	6.81	23.80
39	2.24	11.75	449.3	11.68	18.69	2.58	8.05	449.5	10.30	18.87

EMISSION RESULTS IN GRAMS PER MILE (PER MINUTE FOR IDLE)
FUEL ECONOMY IN MILES PER GALLON (PER MINUTE FOR IDLE)

APPENDIX H

LISTING OF MODAL RESULTS ON INDIVIDUAL VEHICLES

CALIFORNIA

	VEH	YEAR	MAKE	MODL	CID	VEH	YEAR	MAKE	MODL	CID
	0187	1970	CHEV	NOVA	307	0188	1970	DODG	DART	225
MODE NO.	HC	CO	CO2	NOXC	FUEL ECONOMY	HC	CO	CO2	NOXC	FUEL ECONOMY
1	17.15	142.96	682.8	4.58	9.23	2.77	32.50	981.9	7.28	8.52
2	5.84	17.01	276.5	.61	27.59	1.11	19.78	226.5	1.10	34.00
3	34.80	262.85	781.3	1.34	6.80	3.03	52.53	1063.9	2.79	7.68
4	3.64	16.30	517.5	2.18	16.00	4.08	84.99	674.9	3.58	10.80
5	1.96	8.36	399.3	3.70	21.20	1.09	6.94	621.0	5.38	13.97
6	1.06	8.15	244.7	1.32	34.03	.67	6.07	161.2	1.42	51.34
7	2.77	11.56	537.6	9.03	15.72	2.29	30.28	731.0	9.31	11.29
8	1.36	9.10	275.7	3.75	30.15	1.03	5.54	208.9	4.04	40.18
9	2.12	10.10	492.0	6.33	17.25	.67	5.12	615.7	6.36	14.18
10	5.05	12.59	223.5	2.19	34.24	1.36	9.60	175.1	2.56	45.62
11	3.66	24.49	562.9	8.95	14.48	1.90	29.08	706.0	9.22	11.71
12	6.38	14.44	272.5	2.72	28.14	2.05	10.67	150.7	2.75	51.02
13	5.87	42.17	557.6	8.10	13.82	1.44	14.73	716.1	9.11	11.93
14	1.64	9.87	282.9	2.92	29.24	1.36	9.13	231.5	3.16	35.48
15	2.51	6.46	300.4	.84	27.86	.76	7.80	289.2	1.39	29.21
16	9.10	51.57	640.4	.84	11.83	2.25	70.99	364.0	.56	18.39
17	8.14	72.99	477.2	4.49	14.37	1.53	16.22	734.0	7.92	11.61
18	1.72	9.48	288.2	1.45	28.77	.80	9.75	228.9	1.56	35.96
19	3.96	34.77	455.4	3.53	16.98	2.89	35.88	648.3	5.90	12.43
20	3.82	13.65	289.2	1.50	27.49	1.04	11.08	274.9	1.55	30.02
21	6.84	80.76	524.3	6.08	13.19	2.46	39.98	777.5	9.70	10.46
22	6.44	16.34	280.5	3.40	27.18	1.72	9.92	206.2	3.32	39.06
23	14.08	117.22	633.2	4.10	10.30	2.02	26.80	794.6	5.31	10.53
24	1.87	8.02	408.2	4.57	20.80	.82	5.33	555.9	5.59	15.66
25	1.53	11.53	342.3	4.01	24.30	1.26	6.00	245.6	4.51	34.27
26	3.99	13.42	441.2	1.45	18.69	.80	7.07	389.5	2.29	22.01
27	5.38	32.37	485.2	7.19	16.04	.98	10.50	620.8	7.24	13.86
28	6.06	16.04	310.9	3.07	24.97	1.33	10.20	250.7	3.42	32.76
29	12.64	87.41	520.5	2.52	12.72	1.77	26.51	654.8	3.24	12.64
30	1.94	7.30	390.3	4.63	21.76	1.35	10.17	571.5	5.86	15.00
31	1.49	9.35	379.1	4.62	22.27	1.18	4.93	259.0	5.40	32.82
32	4.18	8.26	435.8	1.08	19.21	.89	10.25	328.0	1.96	25.58
BAG (CALC.)	5.38	25.67	399.4	4.56	19.43	1.27	13.35	431.6	5.08	19.44
BAG (ACT.)	5.60	25.65	388.1	4.39	19.89	1.37	13.05	411.9	4.92	20.32
33	3.31	25.45	37.8	.02	100.52	.41	7.75	52.3	.06	134.89
34	29.52	286.83	472.4	.36	8.73	4.73	99.46	627.4	.55	11.11
35	2.10	12.83	684.5	.64	12.48	3.13	58.24	539.5	.89	13.85
36	1.59	7.01	456.2	.48	18.79	2.12	42.78	290.4	.53	24.36
37	1.15	4.81	300.1	.73	28.51	.74	2.34	302.6	1.57	28.76
38	1.32	10.48	335.8	2.08	24.90	.36	2.34	328.6	2.00	26.62
39	1.41	9.52	405.6	4.94	20.88	.65	4.65	362.7	6.01	23.86

EMISSION RESULTS IN GRAMS PER MILE (PER MINUTE FOR IDLE)
FUEL ECONOMY IN MILES PER GALLON (PER MINUTE FOR IDLE)

APPENDIX H

LISTING OF MODAL RESULTS ON INDIVIDUAL VEHICLES

CALIFORNIA

	VEH	YEAR	MAKE	MODL	CID	VEH	YEAR	MAKE	MODL	CID
	0189	1970	FORD	MAVE	200	0190	1970	FORD	GALA	302
MODE NO.	HC	CO	CO2	NOXC	FUEL ECONOMY	HC	CO	CO2	NOXC	FUEL ECONOMY
1	4.13	34.68	850.2	15.97	9.67	5.20	64.62	844.5	7.13	9.22
2	1.30	36.53	384.3	1.01	19.91	3.11	82.13	314.7	.51	19.57
3	4.55	95.18	896.0	4.68	8.37	7.84	213.49	869.9	1.14	7.21
4	1.95	24.97	530.8	6.54	15.40	3.67	53.74	673.2	3.60	11.54
5	1.57	4.93	452.7	10.70	19.07	3.46	17.53	499.2	9.04	16.50
6	.69	13.58	232.8	1.53	34.62	1.71	21.50	223.9	2.16	33.74
7	3.93	68.60	584.3	12.86	12.60	4.35	62.17	600.6	7.53	12.46
8	1.05	7.42	226.9	5.23	36.69	1.99	11.23	201.7	4.55	39.32
9	1.19	3.06	457.2	12.41	19.06	3.00	7.20	477.1	11.71	17.82
10	1.02	17.64	207.6	2.95	37.21	2.02	29.54	183.1	3.00	37.63
11	2.17	20.07	633.4	18.20	13.21	3.42	18.62	624.7	13.27	13.35
12	1.22	22.66	231.2	3.60	32.78	2.51	35.85	210.4	3.61	32.31
13	1.98	11.58	581.2	18.10	14.65	3.38	16.94	617.3	13.21	13.56
14	1.14	12.20	227.2	5.02	35.51	2.07	19.60	217.7	3.92	34.80
15	.81	19.64	333.6	.61	24.18	2.35	42.09	311.2	1.33	23.06
16	3.24	101.69	496.6	.91	13.31	5.44	189.27	421.8	.13	12.05
17	2.04	13.83	543.2	15.41	15.53	3.62	32.63	585.0	10.63	13.70
18	.77	17.04	258.7	1.80	30.83	2.46	32.60	230.2	2.35	30.69
19	2.12	15.65	480.8	12.15	17.33	2.98	29.70	578.6	7.78	13.98
20	1.00	23.27	293.6	1.36	26.62	2.81	53.38	257.8	2.98	25.32
21	2.86	19.82	692.6	19.50	12.11	3.72	36.95	678.0	11.27	11.87
22	1.58	19.99	272.7	5.34	28.71	3.19	30.94	251.5	3.69	28.61
23	2.62	29.77	740.3	8.88	11.16	4.33	64.30	708.9	4.27	10.78
24	1.33	4.35	381.9	11.33	22.58	2.64	13.95	474.6	8.95	17.58
25	1.19	7.68	275.2	6.44	30.50	2.17	13.96	251.5	5.29	31.66
26	1.61	25.70	483.3	1.77	16.78	3.43	70.77	415.9	1.64	16.50
27	1.65	10.28	523.3	14.70	16.30	2.85	17.13	514.7	11.49	16.12
28	1.17	17.03	306.0	5.00	26.38	2.71	32.60	262.5	4.13	27.53
29	2.29	29.38	563.5	6.57	14.39	3.49	71.57	570.5	1.85	12.79
30	1.66	6.47	403.8	11.34	21.17	2.53	14.93	455.6	8.50	18.22
31	1.28	6.94	297.0	7.55	28.45	2.15	13.22	280.9	6.02	28.77
32	1.41	28.73	431.0	1.34	18.46	3.30	71.02	377.0	1.43	17.78
BAG (CALC.)	1.48	16.68	402.9	8.86	20.46	2.79	29.93	386.2	7.00	20.08
BAG (ACT.)	1.54	16.12	405.7	8.26	20.36	2.75	29.57	383.4	6.64	20.24
33	.61	12.82	83.6	.08	84.02	.72	21.26	43.9	.02	111.52
34	7.38	120.40	1021.3	1.12	7.19	10.26	309.47	751.5	.38	6.99
35	3.89	78.70	510.2	.48	13.73	6.00	160.91	432.0	.18	12.61
36	2.55	45.71	340.0	.38	21.14	3.28	70.42	456.0	.31	15.38
37	.93	6.38	314.5	1.00	27.10	2.11	22.14	312.1	.86	25.10
38	.50	2.56	305.7	2.05	28.51	2.30	9.20	309.6	6.14	26.78
39	.93	1.84	325.4	9.73	26.80	2.05	7.61	342.9	8.42	24.56

EMISSION RESULTS IN GRAMS PER MILE (PER MINUTE FOR IDLE)
FUEL ECONOMY IN MILES PER GALLON (PER MINUTE FOR IDLE)

APPENDIX H

LISTING OF MODAL RESULTS ON INDIVIDUAL VEHICLES

CALIFORNIA

	VEH	YEAR	MAKE	MODL	CID	VEH	YEAR	MAKE	MODL	CID
	0191	1970	FORD	LTD	429	0192	1970	FORD	GALA	351
MODE NO.	HC	CO	CO2	NOXC	FUEL ECONOMY	HC	CO	CO2	NOXC	FUEL ECONOMY
1	8.95	62.82	1190.3	13.74	6.74	9.27	179.69	1067.5	13.16	6.43
2	4.38	42.40	518.3	.71	14.82	6.24	164.15	278.8	.75	15.95
3	11.21	110.80	1266.8	.91	6.01	14.10	397.62	1025.8	4.69	5.24
4	6.13	51.95	756.9	5.64	10.34	6.34	86.97	741.1	9.09	9.88
5	4.72	19.79	670.3	9.53	12.39	4.41	55.33	659.5	9.85	11.67
6	2.74	16.47	320.9	3.68	24.97	4.97	51.45	186.6	2.96	31.34
7	4.80	13.67	788.7	16.31	10.75	6.43	182.43	753.5	6.50	8.37
8	3.78	14.47	341.0	6.33	23.62	5.12	40.12	229.6	3.87	28.74
9	4.04	13.66	650.2	14.78	12.97	4.64	69.00	624.0	9.77	11.88
10	4.34	27.58	323.1	3.94	23.34	6.07	61.16	196.8	2.51	28.43
11	4.87	17.56	842.8	21.51	10.02	6.33	164.35	714.2	7.57	8.94
12	5.18	32.44	361.0	4.47	20.72	10.15	79.08	237.9	2.87	22.50
13	4.97	18.21	757.9	20.54	11.06	6.08	139.63	727.8	8.90	9.18
14	3.65	20.97	366.6	5.12	21.59	8.28	48.80	254.3	3.88	24.85
15	2.88	23.05	437.8	1.19	18.37	4.26	86.34	233.0	1.12	23.22
16	10.15	147.46	1074.4	.71	6.63	13.48	433.81	755.2	0.00	6.00
17	6.36	33.59	834.8	16.26	9.78	5.67	91.47	764.7	12.70	9.58
18	3.37	26.83	371.8	4.18	20.90	6.26	69.09	244.7	3.04	23.78
19	5.80	33.17	672.7	9.68	11.94	5.45	88.40	596.8	9.60	11.79
20	3.84	38.71	406.8	3.48	18.50	8.50	88.13	279.7	3.81	19.94
21	5.23	22.45	869.2	22.00	9.64	7.01	213.55	740.0	5.30	8.08
22	4.41	29.49	424.2	4.98	18.32	8.72	73.09	262.7	3.51	21.91
23	9.01	65.25	934.3	11.13	8.33	7.75	186.34	785.9	10.05	8.04
24	3.93	12.61	600.9	11.00	14.02	4.20	75.16	527.6	7.12	13.47
25	5.01	17.45	417.3	7.77	19.27	5.48	41.67	310.1	5.01	22.59
26	4.56	35.14	657.9	1.43	12.20	5.34	137.62	449.9	.85	12.99
27	4.84	19.42	721.5	15.94	11.57	4.92	84.59	617.0	10.93	11.59
28	5.20	28.33	432.5	6.38	17.99	6.90	71.66	332.2	4.30	19.02
29	6.89	62.52	810.8	5.89	9.53	6.81	157.98	619.1	7.17	9.98
30	3.93	15.12	623.4	10.65	13.45	4.15	107.44	502.9	5.98	12.96
31	3.70	14.79	442.9	8.54	18.57	3.94	42.53	328.3	5.41	21.77
32	4.55	38.67	612.9	.95	12.90	5.99	169.20	375.6	.82	13.44
BAG (CALC.)	4.36	26.10	572.7	10.16	14.14	5.64	92.40	458.1	6.27	14.29
BAG (ACT.)	4.22	26.86	564.3	9.61	14.32	5.69	90.89	455.2	5.84	14.41
33	1.27	17.46	131.3	.14	54.54	1.64	59.16	71.4	.05	52.33
34	15.31	197.84	1596.3	1.56	4.54	19.80	678.78	896.5	.57	4.38
35	7.64	84.96	807.3	.72	9.20	9.94	329.76	466.2	.28	8.74
36	4.91	58.31	544.7	.43	13.61	6.21	207.40	347.9	.25	12.80
37	2.19	5.92	390.9	.92	21.80	2.53	53.76	306.2	.41	22.26
38	3.14	8.73	393.0	6.21	21.30	2.61	19.21	349.5	4.81	22.88
39	2.85	13.70	480.5	9.82	17.37	3.23	45.13	430.7	6.87	17.34

EMISSION RESULTS IN GRAMS PER MILE (PER MINUTE FOR IDLE)
FUEL ECONOMY IN MILES PER GALLON (PER MINUTE FOR IDLE)

APPENDIX H

LISTING OF MODAL RESULTS ON INDIVIDUAL VEHICLES

CALIFORNIA

	VEH	YEAR	MAKE	MODL	CID	VEH	YEAR	MAKE	MODL	CID
	0193	1970	MERC	MARQ	429	0194	1970	OLDS	98	455
MODE NO.	HC	CO	CO2	NOXC	FUEL ECONOMY	HC	CO	CO2	NOXC	FUEL ECONOMY
1	10.78	68.86	1026.3	14.51	7.59	4.48	24.93	1554.2	11.70	5.52
2	3.56	27.40	327.5	1.23	23.25	1.75	28.38	428.1	.51	18.56
3	14.50	147.59	1103.4	4.42	6.43	7.69	63.77	1671.2	4.58	4.94
4	6.85	41.83	746.2	8.74	10.65	3.13	16.88	1033.5	6.27	8.30
5	3.50	7.09	591.8	9.58	14.45	1.90	12.85	810.1	7.31	10.61
6	1.86	5.85	217.6	1.96	38.14	2.51	7.29	278.9	1.01	29.75
7	4.60	41.93	755.8	11.11	10.61	4.48	158.06	929.1	6.22	7.45
8	1.59	4.89	222.9	3.66	37.67	2.19	7.46	353.8	3.94	23.83
9	2.67	5.86	597.9	12.34	14.42	2.05	22.48	857.8	8.78	9.87
10	2.83	15.14	205.0	2.07	37.33	1.60	9.18	348.6	1.42	24.12
11	4.07	27.57	734.3	14.07	11.23	2.84	44.84	1078.9	11.33	7.66
12	3.54	19.60	244.9	2.18	30.93	2.87	11.35	394.2	1.78	21.08
13	4.10	17.89	709.1	14.80	11.83	2.88	34.86	1093.2	11.21	7.67
14	2.31	8.99	259.0	3.15	31.65	1.95	8.02	404.7	1.99	20.96
15	2.32	9.76	361.5	1.88	23.10	1.40	17.32	441.9	.77	18.74
16	12.06	149.50	545.0	.68	10.85	3.71	32.57	892.5	.25	9.29
17	5.80	27.81	751.6	14.29	10.91	2.85	20.45	1030.6	9.92	8.28
18	2.27	9.02	264.3	1.99	31.06	1.91	16.54	392.7	1.65	20.89
19	5.06	34.07	631.1	10.99	12.67	2.65	19.14	844.8	7.84	10.05
20	3.01	18.95	331.3	2.59	23.94	1.91	18.43	456.0	1.33	18.07
21	4.71	28.30	809.7	14.60	10.21	3.95	80.81	1066.3	10.20	7.36
22	3.45	16.87	286.2	3.80	27.42	3.56	12.28	421.4	1.80	19.64
23	7.20	56.47	803.3	11.55	9.70	4.35	20.55	997.8	7.80	8.50
24	2.74	5.76	518.9	9.94	16.54	1.93	17.95	761.3	6.85	11.15
25	1.85	7.86	318.6	4.27	26.35	1.70	7.76	530.6	3.06	16.19
26	3.55	14.62	529.7	3.11	15.74	2.19	26.78	728.4	1.24	11.42
27	3.70	16.48	596.8	12.70	13.99	2.09	15.64	867.6	9.47	9.88
28	3.06	15.25	305.6	3.62	26.16	2.95	11.22	490.6	2.28	17.15
29	6.40	53.24	674.4	6.72	11.40	3.29	20.63	842.4	4.72	10.03
30	2.92	8.60	544.6	10.31	15.64	2.40	23.60	625.8	6.53	13.24
31	1.83	5.20	320.8	5.09	26.51	1.37	7.51	588.0	4.19	14.69
32	3.32	14.91	436.2	2.06	18.88	2.47	26.94	658.6	1.61	12.52
BAG (CALC.)	3.32	18.20	458.6	7.20	17.83	2.26	21.53	682.3	5.45	12.27
BAG (ACT.)	3.20	17.34	447.4	6.91	18.31	2.27	21.08	676.7	5.14	12.38
33	1.42	17.52	77.1	.06	81.32	.67	8.40	98.0	.05	78.29
34	17.62	221.55	961.5	.71	6.50	8.97	130.83	1178.2	.58	6.28
35	8.42	95.62	488.2	.36	13.34	3.79	13.75	842.9	.68	10.13
36	5.00	31.92	425.1	.53	18.07	2.87	10.00	631.4	.64	13.53
37	1.94	2.61	338.5	1.96	25.45	2.17	15.31	453.0	.92	18.34
38	1.42	2.59	330.3	4.11	26.19	1.48	10.02	479.0	1.90	17.77
39	1.56	3.72	381.7	7.59	22.62	.57	4.96	496.0	2.52	17.55

EMISSION RESULTS IN GRAMS PER MILE (PER MINUTE FOR IDLE)
FUEL ECONOMY IN MILES PER GALLON (PER MINUTE FOR IDLE)

APPENDIX H

LISTING OF MODAL RESULTS ON INDIVIDUAL VEHICLES

CALIFORNIA

	VEH	YEAR	MAKE	MODL	CID	VEH	YEAR	MAKE	MODL	CID
	0195	1970	PLYM	DUST	318	0196	1970	PLYM	VALI	318
MODE NO.	HC	CO	CO2	NOXC	FUEL ECONOMY	HC	CO	CO2	NOXC	FUEL ECONOMY
1	8.89	97.71	904.9	13.55	8.17	6.16	30.06	923.1	27.78	8.97
2	4.42	98.51	325.2	.93	17.96	3.99	12.32	258.6	.83	30.54
3	13.86	270.64	816.6	2.43	6.90	9.30	37.02	818.3	18.17	9.80
4	4.93	43.58	700.0	11.64	11.32	4.89	12.25	702.2	22.94	12.04
5	3.87	19.53	570.1	13.12	14.48	2.91	10.85	589.3	19.57	14.42
6	3.29	25.82	201.3	3.90	35.17	7.03	5.33	221.7	1.37	35.17
7	4.27	29.35	780.5	13.53	10.56	4.82	49.18	707.6	18.28	11.09
8	2.99	17.14	281.1	5.04	27.95	6.03	6.79	260.2	2.58	30.60
9	2.99	8.58	607.6	13.84	14.08	3.73	18.27	615.0	18.35	13.54
10	3.39	27.57	256.6	3.40	28.57	6.74	8.82	257.4	2.46	30.33
11	3.78	24.66	726.6	14.38	11.42	3.85	48.21	727.0	17.42	10.89
12	5.70	38.44	210.0	3.71	30.77	7.96	10.65	213.4	1.43	34.75
13	4.07	28.35	718.8	13.40	11.43	3.63	37.04	693.6	19.40	11.63
14	3.26	20.91	302.8	5.03	25.65	5.86	8.67	281.9	3.67	28.26
15	3.25	94.76	278.5	.71	20.27	6.57	8.26	299.4	3.14	26.64
16	8.45	208.45	504.7	.71	10.33	4.16	31.40	409.5	1.26	18.80
17	5.07	47.87	671.4	13.34	11.64	3.62	16.81	689.8	23.11	12.20
18	3.35	30.22	295.2	4.51	25.12	8.66	6.83	251.3	2.98	30.66
19	4.06	41.13	571.3	11.88	13.68	2.85	17.01	551.6	21.89	15.11
20	5.03	56.28	261.0	4.38	24.29	8.92	8.18	311.0	2.63	25.21
21	4.77	48.99	793.9	12.52	10.02	4.09	63.00	696.2	18.87	10.98
22	4.48	35.93	308.9	4.87	23.38	7.73	9.57	367.9	3.95	21.78
23	5.92	103.66	712.8	11.40	9.92	5.49	14.09	609.0	27.81	13.69
24	2.95	18.44	486.1	9.67	16.92	3.04	5.35	477.2	18.42	17.92
25	2.94	20.53	337.9	6.77	23.38	7.22	15.94	368.9	3.69	21.29
26	4.52	84.92	409.2	2.47	15.93	3.46	10.23	427.8	1.72	19.51
27	3.44	27.53	604.6	12.26	13.47	3.44	10.12	581.9	19.97	14.58
28	3.97	35.67	330.9	6.14	22.22	7.74	16.00	326.4	3.57	23.60
29	5.74	93.11	564.1	6.31	12.18	7.63	17.36	475.8	23.49	16.83
30	3.28	26.03	542.7	9.44	14.94	3.65	5.50	487.6	17.22	17.48
31	3.64	22.29	374.5	9.08	21.08	7.43	21.38	409.9	3.84	19.00
32	5.29	106.65	421.9	1.79	14.64	3.73	11.99	337.2	1.26	24.13
BAG (CALC.)	3.73	37.84	463.6	8.64	16.59	4.62	18.35	459.5	11.15	17.65
BAG (ACT.)	3.71	38.46	446.8	8.17	17.10	4.65	16.98	462.2	10.21	17.62
33	1.27	27.37	50.3	.03	91.14	.59	2.46	75.3	.08	109.58
34	14.42	317.55	640.6	.35	7.49	7.05	28.66	868.3	.79	9.49
35	6.85	207.02	470.2	.37	10.86	4.82	16.76	584.3	.59	14.18
36	4.59	124.97	395.2	.36	14.64	2.68	9.15	389.4	.46	21.53
37	2.96	47.80	312.6	1.31	22.35	1.72	5.10	290.4	2.01	29.21
38	2.04	9.52	352.2	6.56	23.75	5.53	2.14	352.2	11.34	23.79
39	2.19	11.77	438.4	10.36	19.13	1.78	17.81	454.7	12.87	18.17

EMISSION RESULTS IN GRAMS PER MILE (PER MINUTE FOR IDLE)
FUEL ECONOMY IN MILES PER GALLON (PER MINUTE FOR IDLE)

APPENDIX H

LISTING OF MODAL RESULTS ON INDIVIDUAL VEHICLES

CALIFORNIA

	VEH	YEAR	MAKE	MODL	CID	VEH	YEAR	MAKE	MODL	CID
	0197	1970	PONT	TEMP	250	0198	1970	DATS	510	097
MODE NO.	HC	CO	CO2	NOXC	FUEL ECONOMY	HC	CO	CO2	NOXC	FUEL ECONOMY
1	6.10	138.30	958.6	10.50	7.43	6.32	21.95	405.8	8.82	19.28
2	1.84	44.59	245.8	.99	27.59	2.47	3.14	410.8	.71	20.95
3	6.55	152.61	1090.9	6.41	6.57	2.77	18.65	315.8	1.31	25.08
4	2.02	15.10	737.6	9.30	11.56	1.74	7.86	231.0	3.13	35.67
5	2.01	16.10	543.2	10.19	15.44	1.41	4.13	315.7	5.28	27.17
6	1.60	7.62	210.3	1.52	39.04	2.16	2.44	272.6	1.56	31.33
7	4.00	132.34	743.8	7.90	9.20	3.33	6.34	261.7	6.26	31.45
8	1.68	5.36	227.6	3.11	36.77	.93	3.09	286.4	3.32	30.17
9	1.78	13.81	608.9	12.34	13.95	1.35	3.43	280.7	8.08	30.57
10	2.74	15.90	177.4	2.30	42.05	1.83	2.61	188.4	1.79	44.76
11	2.93	76.87	735.0	9.58	10.26	2.93	14.73	348.4	9.11	23.30
12	3.63	20.70	181.7	2.23	39.32	3.27	4.03	306.6	3.07	27.45
13	3.03	68.57	731.4	9.86	10.46	3.26	15.70	385.5	9.45	21.11
14	2.60	10.10	206.5	4.14	38.49	1.94	4.05	239.5	2.81	35.21
15	1.75	12.51	261.1	2.03	31.00	1.06	18.13	258.9	1.03	30.53
16	2.89	68.89	621.8	1.18	12.01	3.15	37.92	330.3	.76	22.20
17	3.48	66.82	746.6	9.98	10.29	4.77	23.48	343.9	7.49	22.42
18	2.24	13.40	208.0	2.47	37.59	2.85	3.79	236.9	2.02	35.23
19	3.36	57.89	700.2	8.77	11.07	3.43	12.99	249.1	4.40	31.65
20	4.04	25.73	218.6	2.83	32.65	2.77	2.46	300.3	1.96	28.36
21	5.04	159.43	757.7	7.88	8.67	5.00	16.87	313.7	8.08	24.92
22	3.73	19.54	250.1	4.10	30.33	2.73	4.84	261.3	2.54	31.98
23	4.03	82.08	841.7	9.52	9.03	4.07	19.11	253.0	4.14	30.00
24	1.91	25.71	525.5	8.49	15.52	1.92	6.21	269.8	5.39	31.07
25	1.80	6.45	273.7	5.40	30.66	1.15	3.55	296.0	3.29	29.08
26	2.81	17.21	355.1	2.53	22.70	1.20	7.58	345.2	1.18	24.59
27	2.55	43.16	612.3	8.53	12.90	2.65	15.70	320.7	7.42	25.09
28	3.13	15.86	255.5	4.00	30.57	2.58	3.42	255.6	2.80	32.98
29	3.10	52.20	693.0	7.48	11.31	2.68	16.18	268.6	3.57	29.34
30	2.83	46.75	503.3	7.69	15.15	1.62	5.19	266.9	5.53	31.68
31	1.62	5.13	279.3	5.45	30.35	1.12	3.93	334.6	5.48	25.77
32	2.05	29.45	346.3	1.74	22.24	.88	7.13	371.4	1.33	23.03
BAG (CALC.)	2.45	33.25	434.1	6.58	17.96	2.31	8.22	298.8	5.00	27.82
BAG (ACT.)	2.56	32.47	425.7	6.33	18.30	2.41	7.84	293.1	4.91	28.35
33	.70	24.41	46.8	.03	101.51	.22	1.56	27.0	.02	294.23
34	7.74	278.44	599.0	.39	8.36	1.97	10.61	628.2	.55	13.63
35	3.48	90.80	419.3	.29	15.49	1.02	5.66	607.9	.94	14.31
36	.42	2.41	553.5	.80	15.89	.72	3.45	372.9	.56	23.32
37	1.24	1.77	278.1	1.91	31.17	.39	2.37	297.9	.86	29.31
38	1.25	2.21	299.1	5.72	28.95	.56	1.84	225.5	1.87	38.56
39	.94	2.92	381.0	10.60	22.84	.78	2.60	275.1	4.67	31.51

EMISSION RESULTS IN GRAMS PER MILE (PER MINUTE FOR IDLE)
FUEL ECONOMY IN MILES PER GALLON (PER MINUTE FOR IDLE)

APPENDIX H

LISTING OF MODAL RESULTS ON INDIVIDUAL VEHICLES

CALIFORNIA

	VEH	YEAR	MAKE	MODL	CID	VEH	YEAR	MAKE	MODL	CID
	0199	1970	TOYO	CORO	113	0200	1970	VOLK	VAN	97
MODE NO.	HC	CO	CO2	NOXC	FUEL ECONOMY	HC	CO	CO2	NOXC	FUEL ECONOMY
1	5.39	15.63	529.5	7.64	15.54	13.96	128.87	492.7	7.29	12.00
2	4.42	23.02	315.1	1.37	24.30	5.78	13.87	190.9	.96	38.42
3	8.23	12.39	445.9	5.66	18.06	4.82	115.48	631.3	5.62	10.72
4	2.17	16.88	398.2	7.88	20.56	3.51	21.30	437.9	6.69	18.40
5	1.60	14.53	353.4	8.93	23.27	3.23	34.02	350.3	5.77	21.44
6	2.90	7.85	221.8	2.31	36.47	2.63	6.95	142.7	1.16	54.81
7	2.04	19.39	341.8	4.83	23.43	1.58	80.00	302.5	3.18	20.49
8	5.05	3.61	267.7	3.02	30.67	1.51	31.97	169.1	1.35	39.60
9	1.63	4.10	351.4	8.47	24.45	1.52	58.45	304.7	4.57	22.11
10	9.63	3.62	195.0	2.15	38.38	2.36	24.08	139.0	1.23	48.15
11	3.06	39.36	431.9	8.71	17.63	4.83	108.32	355.9	3.60	16.39
12	9.50	3.92	227.4	2.19	33.66	2.83	31.29	135.7	1.03	45.79
13	3.52	37.91	405.1	9.34	18.65	5.55	106.98	344.3	4.06	16.75
14	8.78	3.51	254.1	2.50	30.87	1.51	28.06	177.8	1.77	39.16
15	16.96	8.64	263.4	1.70	26.84	.97	3.99	193.9	1.18	43.68
16	23.28	55.12	903.7	5.52	8.34	1.67	18.20	576.8	.85	14.53
17	3.77	34.03	446.3	9.05	17.34	6.91	92.35	370.9	5.29	16.50
18	5.92	7.72	239.5	1.81	32.82	3.60	7.68	164.3	1.68	47.26
19	3.74	12.11	362.0	9.33	22.59	3.36	41.78	352.1	4.96	20.71
20	7.68	8.68	273.3	1.52	28.51	3.60	13.51	181.8	1.79	41.38
21	3.42	53.38	402.5	5.60	17.85	5.91	114.96	323.6	3.00	16.97
22	9.78	4.60	254.8	2.30	30.29	1.99	30.46	190.7	1.67	36.24
23	6.59	18.84	493.0	9.82	16.33	8.03	103.29	402.4	5.80	15.04
24	1.89	11.54	311.6	7.35	26.44	1.96	38.21	288.2	3.98	25.04
25	7.29	4.42	315.5	3.68	25.68	1.55	35.75	212.0	2.41	32.50
26	18.04	16.15	352.2	2.46	20.41	1.88	6.38	245.8	2.18	33.90
27	2.67	24.86	375.2	8.90	20.99	3.63	83.29	313.1	3.57	19.48
28	10.63	3.94	271.3	2.92	28.52	2.59	32.59	182.4	2.11	36.70
29	7.26	15.65	391.6	8.10	20.21	4.96	75.01	380.4	4.51	17.27
30	2.22	9.15	309.3	5.64	26.84	2.19	29.21	283.5	3.61	26.39
31	7.52	4.72	333.8	3.75	24.31	1.22	42.05	208.8	2.52	31.84
32	19.96	13.51	332.0	2.68	21.31	2.42	9.84	256.8	1.78	31.70
BAG (CALC.)	5.32	19.59	328.1	5.25	23.62	2.85	55.44	254.8	2.76	25.29
BAG (ACT.)	5.43	18.65	316.9	5.11	24.42	3.03	55.07	257.6	2.73	25.09
33	.21	3.01	37.6	.02	206.48	1.46	14.44	25.1	.02	169.20
34	2.26	49.86	602.3	.19	12.90	7.03	163.11	489.3	.20	11.56
35	1.84	26.81	555.2	1.27	14.72	1.27	4.17	618.8	1.44	14.10
36	.95	23.55	332.3	.55	23.84	.85	2.30	362.5	.85	24.07
37	.85	11.15	279.0	2.33	29.66	.64	1.58	255.7	1.95	34.11
38	3.52	2.27	246.7	4.18	33.95	.70	1.72	214.1	3.58	40.53
39	8.40	2.56	309.8	5.31	26.06	1.28	38.03	240.8	3.66	29.14

EMISSION RESULTS IN GRAMS PER MILE (PER MINUTE FOR IDLE)
FUEL ECONOMY IN MILES PER GALLON (PER MINUTE FOR IDLE)

APPENDIX H

LISTING OF MODAL RESULTS ON INDIVIDUAL VEHICLES

ST. LOUIS

	VEH	YEAR	MAKE	MODL	CID	VEH	YEAR	MAKE	MODL	CID
	7002	1976	CHEV	C10	350	7003	1976	CHEV	C10	350
MODE NO.	HC	CO	CO2	NOXC	FUEL ECONOMY	HC	CO	CO2	NOXC	FUEL ECONOMY
1	2.25	74.76	1172.3	6.77	6.84	.56	15.78	1303.2	8.70	6.67
2	1.90	51.33	513.5	.22	14.79	.26	1.93	452.6	.34	19.45
3	4.75	176.94	1046.5	2.16	6.63	1.58	49.84	1332.4	2.01	6.27
4	1.16	30.91	839.4	3.71	9.95	.33	3.44	888.3	4.10	9.92
5	.40	8.13	699.5	7.11	12.44	.23	1.37	798.3	6.29	11.08
6	1.60	9.56	328.6	.93	25.45	.33	1.90	299.0	.57	29.29
7	2.28	115.45	873.1	5.93	8.36	1.14	64.60	966.4	7.21	8.28
8	1.27	8.82	500.9	1.78	17.11	.29	2.73	354.4	.75	24.68
9	.14	.46	795.0	11.95	11.15	.44	25.70	696.7	6.74	12.02
10	1.74	18.35	345.6	.70	23.36	.17	2.49	309.4	.65	28.28
11	.85	48.42	944.0	9.21	8.68	.31	7.86	892.1	11.10	9.80
12	2.25	22.44	319.7	.76	24.51	.27	5.60	319.7	.81	26.95
13	.84	35.33	827.8	9.78	10.02	.87	57.41	882.4	7.76	9.10
14	1.15	13.61	425.3	1.49	19.71	.20	5.35	355.7	1.12	24.34
15	1.29	34.50	466.9	.37	16.90	.13	2.04	447.3	.44	19.68
16	4.51	129.89	709.4	0.00	9.57	.10	3.95	839.0	.88	10.50
17	.76	29.48	872.4	7.65	9.64	.50	17.30	892.1	7.87	9.64
18	.99	15.74	427.9	.20	19.48	.15	1.57	417.1	.80	21.13
19	.67	21.92	685.3	5.28	12.29	5.88	179.03	627.1	3.62	9.57
20	.95	21.68	474.0	.15	17.36	.32	3.24	501.4	1.01	17.49
21	2.15	134.02	852.0	4.99	8.30	1.09	36.13	937.1	10.40	8.90
22	1.87	24.66	445.6	1.55	18.10	.19	5.08	402.4	.91	21.60
23	1.61	66.61	776.9	6.09	10.01	.45	13.13	948.7	6.31	9.14
24	.22	6.76	673.6	7.70	12.96	.18	3.80	678.7	5.80	12.95
25	.86	7.84	486.2	2.02	17.71	.18	6.37	483.9	1.35	17.95
26	1.80	47.88	620.1	.69	12.66	.09	1.43	598.9	1.28	14.76
27	.46	13.60	803.4	8.99	10.74	.23	8.22	791.7	6.81	11.02
28	1.48	18.25	518.6	1.55	16.08	.19	10.40	435.6	.91	19.61
29	1.55	56.56	559.4	3.18	13.59	.33	8.39	762.6	2.96	11.43
30	.45	17.12	674.7	6.70	12.62	.33	10.12	604.1	5.32	14.29
31	.93	8.23	615.8	2.39	14.05	.18	13.09	526.6	1.39	16.20
32	1.99	45.20	570.3	.52	13.70	.11	.52	563.3	.90	15.72
BAG (CALC.)	1.04	28.17	643.3	4.03	12.85	.41	16.56	616.4	3.58	13.79
BAG (ACT.)	1.35	29.66	636.6	3.22	12.91	.44	15.85	592.8	3.68	14.34
33	.65	20.11	83.1	.04	76.02	.01	0.00	80.9	.06	109.63
34	8.86	232.39	1044.8	.49	6.17	.79	0.00	976.6	.23	9.06
35	4.68	121.45	533.8	.37	12.00	.33	0.00	590.8	.23	15.00
36	3.10	83.62	462.1	.33	14.71	.12	0.00	591.2	.54	15.00
37	1.33	28.54	447.5	.37	17.87	.09	0.00	470.4	.38	18.86
38	.07	.06	498.4	1.65	17.80	.07	0.00	466.2	1.23	19.03
39	.17	12.18	557.9	2.92	15.37	.83	36.53	479.2	2.84	16.46

EMISSION RESULTS IN GRAMS PER MILE (PER MINUTE FOR IDLE)
FUEL ECONOMY IN MILES PER GALLON (PER MINUTE FOR IDLE)

APPENDIX H

LISTING OF MODAL RESULTS ON INDIVIDUAL VEHICLES

ST. LOUIS

	VEH	YEAR	MAKE	MODL	CID	VEH	YEAR	MAKE	MODL	CID
	7005	1976	DODG	B100	318	7007	1976	FORD	CLUB	302
MODE NO.	HC	CO	CO2	NOxC	FUEL ECONOMY	HC	CO	CO2	NOxC	FUEL ECONOMY
1	1.88	42.02	1285.4	4.41	6.54	3.76	46.72	1322.8	17.97	6.30
2	.46	9.26	443.7	.55	19.31	1.99	23.25	217.5	.70	34.10
3	1.04	35.01	1270.8	1.59	6.68	5.60	106.43	1277.2	5.04	6.07
4	.85	16.63	818.7	2.43	10.47	2.57	10.63	858.7	8.08	10.05
5	.28	3.37	725.1	3.91	12.14	1.73	3.20	706.4	12.77	12.38
6	.29	.80	281.2	1.58	31.32	2.98	8.23	193.5	.62	41.11
7	1.17	36.20	981.3	5.32	8.52	3.81	105.75	959.4	12.21	7.80
8	.15	.83	324.9	.94	27.17	2.94	8.90	189.2	2.23	41.77
9	.08	.88	762.4	3.87	11.62	1.47	6.48	762.8	15.71	11.41
10	.22	1.07	315.4	.77	27.93	3.07	14.64	213.0	.90	36.11
11	1.47	70.83	904.3	4.12	8.70	2.28	32.25	936.1	18.70	8.93
12	.18	1.56	339.8	.85	25.89	4.44	16.58	160.8	1.39	44.17
13	.99	28.20	949.5	5.56	8.90	2.33	29.81	984.2	21.05	8.55
14	.10	.71	356.9	1.28	24.77	3.28	9.38	193.3	.92	40.62
15	.13	3.55	373.4	1.63	23.39	1.86	13.80	259.2	.68	30.95
16	0.00	4.73	789.4	.67	11.14	2.61	73.29	247.7	.84	23.91
17	1.43	41.25	901.5	4.17	9.14	2.44	19.97	1042.3	20.15	8.21
18	.20	1.45	327.0	1.79	26.90	3.40	12.24	202.5	.67	38.17
19	.68	16.81	793.1	2.99	10.80	2.66	22.75	929.9	18.21	9.11
20	.28	2.60	432.9	1.48	20.27	4.31	18.62	215.5	1.06	34.34
21	2.84	150.03	938.5	3.48	7.50	3.37	71.53	1128.8	20.94	7.09
22	.18	.64	386.4	1.19	22.88	4.31	16.89	163.9	.89	43.48
23	.70	20.23	990.7	3.02	8.66	3.57	39.34	953.8	13.71	8.64
24	.23	5.74	685.8	3.29	12.76	1.68	17.37	737.5	13.60	11.52
25	.08	.44	419.1	1.85	21.13	3.05	7.81	213.3	2.21	37.72
26	.21	0.00	697.6	1.88	12.71	2.63	18.24	262.2	1.39	29.66
27	.37	5.66	805.9	3.81	10.88	1.73	11.15	786.9	16.54	10.96
28	.17	.81	406.5	1.46	21.74	3.94	12.99	207.3	1.27	36.94
29	.78	20.27	777.1	2.21	10.94	3.32	27.28	817.9	9.86	10.19
30	.41	5.31	656.3	3.31	13.33	2.02	20.12	747.1	13.93	11.31
31	.09	.36	524.7	1.68	16.89	2.79	8.86	223.5	2.07	36.05
32	.25	.35	527.5	1.35	16.78	2.13	19.45	393.8	1.35	20.59
BAG (CALC.)	.41	12.04	616.0	2.50	13.95	2.25	19.05	514.7	7.41	16.08
BAG (ACT.)	.46	12.56	602.4	2.61	14.23	2.25	19.29	494.4	7.60	16.69
33	.04	0.00	101.4	.09	87.40	.48	10.75	62.3	.04	109.91
34	.66	.15	1190.9	.80	7.44	5.79	147.70	749.5	.27	8.88
35	.72	.51	708.8	.54	12.47	2.82	38.83	658.0	.53	12.19
36	.29	.34	549.6	.64	16.11	1.83	16.67	453.0	.54	18.30
37	.17	.34	377.8	2.49	23.43	1.20	1.84	328.3	.68	26.50
38	.08	.08	439.9	2.50	20.16	.88	2.75	362.9	2.10	23.99
39	.06	.10	519.9	2.75	17.06	.49	3.54	420.5	5.75	20.76

EMISSION RESULTS IN GRAMS PER MILE (PER MINUTE FOR IDLE)
FUEL ECONOMY IN MILES PER GALLON (PER MINUTE FOR IDLE)

APPENDIX H

LISTING OF MODAL RESULTS ON INDIVIDUAL VEHICLES

ST. LOUIS

	VEH	YEAR	MAKE	MODL	CID	VEH	YEAR	MAKE	MODL	CID
	7008	1976	FORD	F150	360	7010	1976	TOYO	TRUC	140
MODE NO.	HC	CO	CO2	NOXC	FUEL ECONOMY	HC	CO	CO2	NOXC	FUEL ECONOMY
1	6.86	97.65	1436.9	7.78	5.51	4.21	17.59	803.7	3.60	10.51
2	.96	9.31	412.8	.61	20.62	.86	6.77	442.1	1.04	19.49
3	4.17	44.28	1434.3	4.06	5.85	1.66	31.15	764.9	.64	10.84
4	4.26	72.90	792.3	4.50	9.64	.50	8.63	540.6	1.71	15.97
5	3.96	56.77	710.1	6.22	10.93	.30	4.62	526.9	2.13	16.59
6	5.28	11.43	243.3	.30	31.93	.30	4.67	292.1	1.95	29.54
7	4.75	40.66	918.7	15.31	8.90	1.64	51.44	497.8	5.86	15.20
8	5.89	13.14	217.0	.52	34.62	1.48	4.22	281.9	3.61	30.26
9	3.58	45.87	683.0	7.52	11.58	.40	3.90	464.0	4.93	18.83
10	4.17	13.81	265.3	.47	29.56	.79	3.22	275.0	2.13	31.41
11	4.44	40.17	909.3	13.94	9.00	1.59	23.56	592.8	6.07	13.98
12	5.14	24.95	257.0	.52	28.40	1.53	5.72	305.1	2.78	27.83
13	4.86	30.70	932.2	12.50	8.91	.83	14.93	553.7	6.42	15.31
14	4.73	41.18	240.9	.49	27.68	.95	2.92	285.5	2.85	30.28
15	1.69	14.95	302.1	.55	26.82	.28	12.91	288.9	1.70	28.62
16	0.00	15.62	753.6	.98	11.41	3.62	13.95	961.4	.75	8.92
17	5.30	34.94	936.7	9.46	8.80	.88	13.99	559.4	4.64	15.19
18	4.47	43.27	274.0	.57	24.92	.37	4.87	318.6	1.74	27.11
19	5.17	19.69	882.2	8.08	9.55	.40	6.94	519.4	2.24	16.69
20	4.22	42.95	333.5	.97	21.42	.48	7.04	385.5	1.93	22.29
21	5.31	27.59	1021.3	17.36	8.21	3.25	91.20	522.6	4.31	13.13
22	5.45	47.32	270.1	.79	24.54	1.22	4.82	358.3	2.88	24.01
23	6.04	12.83	1103.3	6.73	7.77	.93	9.67	570.6	2.23	15.08
24	3.71	26.55	677.4	7.32	12.14	.19	3.60	391.9	3.34	22.29
25	5.44	54.04	215.2	.46	27.97	.96	4.20	352.8	3.93	24.48
26	2.33	9.04	621.1	.63	13.81	.32	15.43	468.3	2.62	17.98
27	4.16	34.55	805.0	7.97	10.17	.60	8.23	498.6	4.89	17.29
28	4.87	41.00	316.6	.45	22.39	.40	3.89	354.9	2.85	24.50
29	4.83	9.61	980.3	5.79	8.78	.75	9.78	473.6	1.77	18.06
30	3.78	26.07	688.7	9.75	11.97	.44	9.49	435.2	2.63	19.66
31	4.94	53.68	244.7	.57	25.75	.79	4.87	420.8	4.36	20.60
32	2.36	10.60	468.0	1.00	18.04	.37	15.92	415.1	1.84	20.11
BAG (CALC.)	3.71	33.73	533.2	4.35	14.84	.77	10.56	430.7	3.96	19.73
BAG (ACT.)	3.94	33.97	519.7	4.54	15.16	.76	9.70	410.4	4.20	20.74
33	.33	.36	94.4	.04	92.45	.10	2.17	49.1	.02	167.86
34	4.27	4.88	1153.9	.51	7.55	.94	30.00	841.3	.70	9.96
35	1.75	2.87	657.3	.38	13.30	.22	15.58	761.8	.82	11.28
36	1.22	2.83	528.9	.43	16.52	.17	10.61	499.6	.62	17.17
37	1.43	6.73	384.8	.72	22.19	.08	3.07	411.8	.85	21.29
38	1.74	31.26	408.2	.46	19.18	.35	3.75	284.6	2.50	30.44
39	2.08	40.38	407.4	1.03	18.59	.21	2.94	340.8	4.80	25.64

EMISSION RESULTS IN GRAMS PER MILE (PER MINUTE FOR IDLE)
FUEL ECONOMY IN MILES PER GALLON (PER MINUTE FOR IDLE)

APPENDIX H

LISTING OF MODAL RESULTS ON INDIVIDUAL VEHICLES

ST. LOUIS

	VEH	YEAR	MAKE	MODL	CID	VEH	YEAR	MAKE	MODL	CID
	7011	1975	CHEV	C10	350	7012	1975	CHEV	TRUC	350
MODE NO.	HC	CO	CO2	NOXC	FUEL ECONOMY	HC	CO	CO2	NOXC	FUEL ECONOMY
1	1.49	67.78	1344.2	3.08	6.10	2.18	79.81	1005.9	11.25	7.80
2	.14	2.16	437.5	.26	20.11	2.94	70.39	411.4	.97	16.71
3	.31	8.14	1814.1	2.59	4.86	5.89	262.04	1049.2	2.38	6.00
4	1.26	37.91	864.4	2.03	9.56	1.30	72.46	708.2	4.81	10.74
5	.70	22.81	798.8	2.25	10.61	.48	19.93	552.1	7.06	15.17
6	.36	9.66	317.6	.69	26.58	2.92	14.24	333.4	.56	24.31
7	3.10	218.00	968.9	2.75	6.72	.79	23.92	743.2	11.67	11.33
8	.92	28.47	363.2	1.36	21.60	1.72	7.43	403.9	1.12	21.08
9	1.13	41.45	772.3	6.23	10.55	.19	.78	706.6	11.60	12.53
10	.56	22.22	369.6	.87	21.85	2.60	20.08	328.0	.93	24.13
11	2.14	78.89	984.5	7.00	7.96	.39	16.67	870.8	10.96	9.88
12	.74	23.77	333.7	1.25	23.77	3.53	21.63	337.8	.87	23.17
13	2.13	103.64	954.4	6.00	7.90	.82	30.77	888.9	10.11	9.44
14	.91	30.40	362.5	1.37	21.48	2.07	14.07	324.2	1.31	25.15
15	.10	3.37	457.6	.51	19.16	1.73	56.18	301.1	.35	22.48
16	0.00	1.95	1317.4	1.69	6.72	5.83	207.34	866.5	.18	7.33
17	1.97	77.28	930.7	5.94	8.39	.71	36.76	801.7	9.52	10.30
18	.37	10.81	422.1	.89	20.16	2.68	23.94	350.2	.52	22.39
19	1.64	65.70	973.5	4.02	8.20	.83	36.48	837.4	9.10	9.89
20	.72	22.43	544.3	1.07	15.25	2.97	35.91	346.9	.54	21.50
21	3.13	230.76	973.3	4.25	6.59	1.03	45.26	923.7	11.75	8.89
22	1.01	34.12	481.3	1.34	16.49	3.09	23.06	371.1	1.11	21.28
23	1.60	56.96	1147.0	3.88	7.15	2.03	97.96	975.5	6.20	7.81
24	1.49	49.11	687.0	4.89	11.54	.32	5.30	627.7	8.08	13.93
25	1.14	43.88	436.8	1.52	17.42	1.56	24.56	445.0	1.81	18.17
26	.21	3.61	720.0	.55	12.22	2.57	78.82	579.2	1.01	12.48
27	2.12	77.48	801.5	5.35	9.54	.48	10.84	745.9	7.43	11.61
28	1.12	42.08	484.7	1.29	16.01	2.43	39.62	411.6	1.15	18.43
29	1.31	40.20	823.3	2.72	9.97	1.96	77.24	735.2	5.51	10.29
30	2.00	81.79	693.5	3.71	10.71	.36	6.93	638.4	9.57	13.65
31	1.55	50.21	518.4	1.98	14.74	1.76	31.28	460.7	1.61	17.22
32	.32	11.97	646.5	.71	13.32	2.81	86.49	529.9	1.15	13.15
BAG (CALC.)	1.35	58.97	644.4	2.89	11.97	1.38	32.53	577.5	4.44	14.02
BAG (ACT.)	1.39	59.73	634.2	3.15	12.12	1.45	33.27	543.3	4.28	14.79
33	.04	.00	119.9	.18	73.95	.61	24.85	74.3	.04	76.96
34	.53	0.00	1396.9	1.20	6.35	8.06	299.42	914.4	.53	6.29
35	.63	.87	723.8	.59	12.21	4.17	146.55	457.4	.27	12.66
36	.18	0.00	660.3	.91	13.43	3.21	122.13	419.2	.26	14.29
37	.13	0.00	530.1	.65	16.73	1.63	58.13	373.0	.57	18.90
38	.30	12.99	500.9	1.36	16.99	.08	.55	459.1	1.91	19.29
39	1.28	51.06	522.7	2.59	14.62	.05	.10	502.3	4.14	17.66

EMISSION RESULTS IN GRAMS PER MILE (PER MINUTE FOR IDLE)
FUEL ECONOMY IN MILES PER GALLON (PER MINUTE FOR IDLE)

APPENDIX H

LISTING OF MODAL RESULTS ON INDIVIDUAL VEHICLES

ST. LOUIS

	VEH	YEAR	MAKE	MODL	CID	VEH	YEAR	MAKE	MODL	CID
	7013	1975	CHEV	G10V	350	7014	1975	DODG	C100	318
MODE NO.	HC	CO	CO2	NOXC	FUEL ECONOMY	HC	CO	CO2	NOXC	FUEL ECONOMY
1	.69	.60	1209.6	4.42	7.32	1.36	18.44	1154.8	13.10	7.47
2	.35	.17	464.1	.41	19.07	1.02	11.79	456.9	.51	18.54
3	.65	.16	1006.4	2.40	8.80	2.09	27.39	1282.6	1.89	6.66
4	.38	.13	833.4	2.42	10.63	1.00	17.55	700.8	5.34	12.13
5	.35	.13	782.4	4.08	11.32	.22	1.18	681.2	8.16	12.98
6	.46	.06	409.8	.63	21.58	.81	.57	292.6	.90	29.98
7	.44	4.11	973.7	6.04	9.04	.57	2.87	887.4	15.41	9.93
8	.41	.17	437.6	1.64	20.21	.51	.66	314.1	1.90	28.02
9	.20	.29	742.8	5.61	11.93	.06	.27	653.3	7.40	13.57
10	.31	.16	346.4	1.02	25.53	.71	1.12	319.0	1.39	27.48
11	.36	1.05	956.4	7.32	9.25	.44	6.29	844.5	14.77	10.37
12	.36	.28	400.3	1.31	22.08	1.16	.73	346.4	1.55	25.27
13	.30	.77	888.3	6.51	9.97	.33	3.98	832.9	13.97	10.56
14	.28	.18	500.1	1.61	17.70	.51	1.09	327.5	1.85	26.83
15	.13	.12	461.8	.79	19.19	.27	4.96	394.7	.63	22.01
16	.38	0.00	906.2	.59	9.78	1.10	46.39	707.9	0.00	11.32
17	.45	.70	893.3	4.39	9.91	.56	8.48	846.6	12.71	10.30
18	.29	0.00	483.2	.66	18.33	1.07	1.37	318.0	1.28	27.43
19	.37	.31	726.0	3.95	12.20	.53	8.03	747.6	8.58	11.65
20	.43	.03	575.6	.79	15.38	1.09	2.37	417.3	1.53	20.91
21	.47	4.06	1074.7	5.87	8.20	1.60	62.11	855.6	11.04	9.26
22	.36	.13	493.9	1.68	17.92	.74	1.07	373.7	1.98	23.50
23	.42	.12	784.8	3.22	11.29	.80	17.78	854.6	6.41	10.03
24	.24	.21	690.8	3.96	12.83	.12	1.78	586.7	7.78	15.05
25	.33	.18	537.1	2.07	16.48	.30	.90	409.2	2.53	21.57
26	.30	.09	754.6	.50	11.75	.42	4.27	564.5	1.14	15.50
27	.31	.40	799.8	5.16	11.07	.31	5.04	703.3	11.01	12.46
28	.37	.17	524.0	1.75	16.89	.61	.94	425.5	1.91	20.69
29	.41	.41	751.3	2.00	11.78	.82	13.23	780.3	3.65	11.04
30	.33	.19	641.0	4.27	13.82	.17	.88	552.2	7.91	16.02
31	.30	.19	600.4	2.64	14.75	.26	.88	417.1	3.01	21.17
32	.29	.04	652.4	.42	13.58	.52	6.43	500.4	.89	17.33
BAG (CALC.)	.30	.47	653.4	3.17	13.55	.49	5.15	564.2	5.80	15.47
BAG (ACT.)	.30	.45	636.3	3.47	13.91	.53	4.66	550.1	5.84	15.87
33	.07	0.00	83.8	.04	105.67	.38	4.26	107.6	.08	76.84
34	2.60	0.00	1030.1	.44	8.55	4.96	102.63	1221.6	.99	6.35
35	4.06	.29	570.5	.22	15.20	2.58	49.14	622.7	.48	12.53
36	.22	0.00	554.2	.37	15.99	1.70	31.95	414.6	.33	18.88
37	.35	.02	478.3	.38	18.51	.11	.12	379.0	.69	23.38
38	.13	.02	465.6	1.09	19.05	.05	0.00	426.5	1.77	20.80
39	.16	.18	567.1	3.35	15.63	.02	.05	483.1	3.46	18.37

EMISSION RESULTS IN GRAMS PER MILE (PER MINUTE FOR IDLE)
FUEL ECONOMY IN MILES PER GALLON (PER MINUTE FOR IDLE)

APPENDIX H

LISTING OF MODAL RESULTS ON INDIVIDUAL VEHICLES

ST. LOUIS

	VEH	YEAR	MAKE	MODL	CID	VEH	YEAR	MAKE	MODL	CID
	7015	1975	FORD	F100	302	7016	1975	FORD	F100	300
MODE NO.	HC	CO	CO2	NOXC	FUEL ECONOMY	HC	CO	CO2	NOXC	FUEL ECONOMY
1	1.88	25.07	1191.8	2.66	7.17	1.98	43.60	1071.1	2.73	7.75
2	.18	.72	555.2	1.44	15.94	.25	1.66	304.2	.68	28.85
3	1.05	1.40	959.5	2.19	9.20	.63	9.25	1017.1	5.30	8.59
4	.81	1.54	782.3	1.96	11.27	.86	14.93	710.5	2.93	12.05
5	.79	.82	725.0	3.26	12.18	.74	17.97	645.1	2.21	13.14
6	.51	.49	428.9	1.19	20.58	.65	.47	229.4	.41	38.21
7	2.28	95.28	912.4	5.15	8.30	1.37	87.97	819.1	5.26	9.23
8	.47	.50	454.0	2.30	19.45	.77	.61	309.2	.96	28.39
9	.73	19.41	733.5	3.79	11.58	.45	12.80	660.0	3.67	13.02
10	.36	.57	369.4	1.57	23.89	.71	.80	253.9	.73	34.48
11	1.14	52.97	1012.8	3.90	8.07	.58	16.85	860.9	3.99	9.98
12	.38	.72	396.8	1.84	22.23	.86	1.08	254.6	.54	34.27
13	.83	30.05	971.8	3.87	8.69	.51	17.94	851.1	3.48	10.08
14	.30	.93	466.6	2.38	18.92	.67	.61	327.1	1.26	26.88
15	0.00	1.63	554.6	1.40	15.93	0.00	.32	366.6	1.16	24.17
16	0.00	3.13	906.8	0.00	9.74	.24	0.00	530.4	.18	16.71
17	.94	7.31	964.7	3.48	9.06	1.01	21.41	827.7	2.01	10.27
18	.40	1.16	469.2	1.89	18.79	.56	.53	323.8	.58	27.19
19	.91	8.44	704.2	1.94	12.32	.78	13.40	733.2	2.77	11.73
20	.39	1.67	515.2	1.71	17.10	.50	.76	358.0	.57	24.60
21	1.57	90.08	1020.7	3.99	7.60	.97	46.34	867.3	4.17	9.41
22	.42	1.72	502.2	2.34	17.53	.62	.77	372.6	1.37	23.62
23	.75	2.51	876.6	2.79	10.05	.83	17.78	906.8	2.39	9.47
24	.58	10.49	699.9	2.97	12.36	.48	10.81	601.0	2.37	14.33
25	.50	1.28	511.9	2.87	17.22	.44	.78	389.4	1.73	22.64
26	.23	2.45	723.9	2.56	12.18	.12	2.53	523.9	1.67	16.80
27	.57	8.45	849.9	3.98	10.26	.52	13.00	701.7	2.19	12.26
28	.37	1.03	526.1	2.50	16.78	.52	1.02	396.9	1.37	22.18
29	.58	4.20	816.2	2.15	10.76	.59	12.65	658.9	1.59	13.04
30	.64	22.75	761.0	2.79	11.11	.50	11.17	558.5	2.53	15.37
31	.37	1.13	538.5	3.21	16.39	.40	1.04	452.8	2.18	19.48
32	.12	3.33	670.5	1.72	13.13	.12	2.74	482.0	.95	18.24
BAG (CALC.)	.52	11.57	678.3	3.08	12.71	.48	9.01	539.7	2.15	15.98
BAG (ACT.)	.55	11.68	657.6	3.21	13.10	.53	9.39	507.9	2.11	16.93
33	.07	.00	100.1	.12	88.44	.06	.01	69.2	.05	127.92
34	.96	.01	1250.3	1.16	7.08	.68	.16	830.8	.30	10.65
35	.44	0.00	634.4	.59	13.96	.34	.31	533.6	.29	16.58
36	.27	.05	607.6	.87	14.59	.25	.15	411.9	.37	21.49
37	.15	.15	492.1	1.31	18.01	.37	.15	347.9	.56	25.41
38	.26	.34	479.1	1.67	18.47	.13	.23	404.0	1.28	21.93
39	.16	.84	570.8	3.77	15.50	.10	.83	505.6	4.34	17.50

EMISSION RESULTS IN GRAMS PER MILE (PER MINUTE FOR IDLE)
FUEL ECONOMY IN MILES PER GALLON (PER MINUTE FOR IDLE)

APPENDIX H

LISTING OF MODAL RESULTS ON INDIVIDUAL VEHICLES

ST. LOUIS

	VEH	YEAR	MAKE	MODL	CID	VEH	YEAR	MAKE	MODL	CID
	7017	1975	FORD	F100	360	6018	1976	AMC	HORN	258
MODE NO.	HC	CO	CO2	NOXC	FUEL ECONOMY	HC	CO	CO2	NOXC	FUEL ECONOMY
1	1.18	48.76	1012.0	2.09	8.13	1.24	7.77	924.0	10.45	9.44
2	.36	19.37	659.0	.66	12.85	.37	5.18	340.5	1.50	25.37
3	1.53	109.86	954.9	.40	7.84	1.83	12.65	1079.5	4.64	8.03
4	.66	21.39	675.4	1.00	12.48	1.06	3.65	620.0	8.23	14.11
5	.55	10.96	759.0	1.75	11.41	.59	1.74	551.6	8.35	15.96
6	1.49	5.88	503.9	.71	17.14	.55	3.20	226.8	2.93	37.99
7	2.06	103.11	805.6	3.25	9.11	.98	26.41	751.0	9.47	11.16
8	.79	3.41	651.1	1.90	13.47	.49	4.32	255.8	4.35	33.60
9	.27	8.08	759.6	2.81	11.48	.33	2.74	607.2	7.93	14.49
10	1.84	3.16	471.7	1.12	18.40	1.12	3.52	236.1	2.72	36.20
11	.29	30.58	1066.3	5.00	7.96	.68	8.10	776.4	12.01	11.22
12	3.56	5.79	540.3	1.55	15.83	1.98	4.04	228.3	3.10	36.84
13	.26	19.51	977.5	4.81	8.80	1.01	12.02	700.5	12.34	12.28
14	1.86	3.44	552.6	1.67	15.74	1.11	2.01	293.1	4.25	29.60
15	.16	13.79	619.6	.74	13.83	.54	2.08	254.9	2.55	34.14
16	.60	46.95	1382.6	.78	6.09	1.38	13.86	612.7	1.02	13.89
17	.48	17.60	794.5	3.56	10.77	1.01	4.45	642.9	12.11	13.59
18	.96	6.75	576.3	.90	15.05	.61	2.23	290.0	3.31	30.04
19	.38	14.41	645.6	1.76	13.26	.96	4.73	564.6	8.96	15.43
20	1.36	7.44	648.8	.89	13.35	.81	3.81	335.5	3.82	25.80
21	.77	55.12	982.8	4.24	8.28	1.20	31.56	796.2	11.35	10.45
22	2.19	5.37	672.0	1.66	12.91	1.43	3.17	308.4	4.26	27.91
23	.64	34.53	767.0	.97	10.78	1.40	9.48	795.9	9.34	10.89
24	.28	9.31	611.1	2.54	14.17	.56	1.44	495.5	8.42	17.77
25	.92	3.61	711.9	2.01	12.32	.39	1.74	350.8	5.88	25.01
26	.45	19.14	876.7	.84	9.77	.92	1.44	419.1	3.53	20.92
27	.31	13.23	794.0	3.92	10.88	.72	3.49	594.8	11.11	14.73
28	2.09	3.75	645.4	1.73	13.49	1.19	3.21	372.1	4.53	23.30
29	.64	27.29	626.4	.89	13.22	1.21	6.25	538.2	6.43	16.08
30	.34	14.05	649.2	2.27	13.20	.61	3.05	481.5	7.94	18.18
31	.67	5.02	670.9	2.20	13.04	.31	2.89	479.7	6.91	18.29
32	.52	16.45	807.0	1.04	10.64	.94	5.35	436.3	2.96	19.82
BAG (CALC.)	.90	18.28	727.6	2.59	11.69	.83	5.08	472.0	7.05	18.39
BAG (ACT.)	.91	18.93	710.8	2.77	11.94	.85	5.42	458.4	7.56	18.90
33	.33	15.81	107.1	.04	66.74	.17	.34	70.3	.11	124.32
34	2.84	137.55	1353.7	.50	5.62	1.96	4.08	850.1	1.08	10.29
35	.85	48.31	832.1	.38	9.75	.94	5.03	608.9	.96	14.32
36	.55	33.22	682.9	.34	12.04	.65	2.48	352.7	.71	24.75
37	.60	21.89	479.1	.68	17.22	.46	1.27	291.3	1.96	30.11
38	.35	6.51	552.5	.83	15.74	.34	1.39	330.4	4.35	26.60
39	.12	3.21	579.3	2.15	15.18	.20	1.44	403.9	6.49	21.82

EMISSION RESULTS IN GRAMS PER MILE (PER MINUTE FOR IDLE)
FUEL ECONOMY IN MILES PER GALLON (PER MINUTE FOR IDLE)

APPENDIX H

LISTING OF MODAL RESULTS ON INDIVIDUAL VEHICLES

ST. LOUIS

	VEH	YEAR	MAKE	MODL	CID	VEH	YEAR	MAKE	MODL	CID
	6019	1976	BUIC	STAW	350	6020	1976	BUIC	SKYL	231
MODE NO.	HC	CO	CO2	NOXC	FUEL ECONOMY	HC	CO	CO2	NOXC	FUEL ECONOMY
1	.88	20.49	1399.6	8.35	6.19	1.40	17.63	782.9	7.66	10.89
2	.11	2.50	453.5	.35	19.39	.54	6.88	352.8	.63	24.29
3	1.31	20.76	1210.3	2.20	7.12	2.56	34.33	813.0	2.74	10.14
4	.75	14.57	929.3	4.41	9.30	.67	12.50	509.9	2.89	16.69
5	.26	3.33	791.0	6.30	11.14	.22	3.01	438.5	4.82	19.99
6	.14	.43	332.2	.86	26.62	.57	2.13	279.5	.38	31.18
7	3.50	272.72	880.7	4.01	6.72	1.85	46.65	550.8	8.09	14.09
8	.20	1.17	379.2	3.83	23.25	.67	1.44	239.5	2.08	36.39
9	.13	2.19	852.7	7.41	10.36	.14	.78	422.0	7.80	20.95
10	.07	.67	326.8	2.11	27.06	.69	4.42	221.2	1.20	38.54
11	2.53	182.34	946.8	6.00	7.15	.44	12.74	659.0	13.83	13.04
12	.17	1.66	357.0	2.35	24.64	1.05	7.66	267.6	1.74	31.37
13	.83	34.68	1077.9	8.71	7.82	.37	5.43	655.5	14.50	13.34
14	.09	.10	334.7	2.72	26.48	.63	2.44	248.6	1.70	34.88
15	.07	.11	384.9	.56	23.03	.51	9.35	249.1	1.35	33.44
16	.19	2.79	1014.7	.16	8.70	2.01	46.70	537.9	.50	14.37
17	.42	8.88	1093.8	7.39	8.00	.47	8.75	601.2	9.57	14.40
18	.31	8.19	382.0	.75	22.42	.53	2.38	242.0	.67	35.87
19	.78	23.46	827.2	6.27	10.24	.36	7.14	555.2	7.86	15.64
20	.31	8.53	429.4	.90	20.00	.65	9.26	320.5	.74	26.33
21	3.49	265.01	928.3	4.53	6.55	1.40	63.15	680.9	8.33	11.31
22	.24	2.80	403.2	2.59	21.74	1.01	8.39	297.3	1.39	28.30
23	.93	19.73	957.0	6.47	8.96	1.33	28.87	530.9	5.53	15.29
24	.43	11.58	732.6	4.87	11.80	.30	3.96	483.7	7.49	18.08
25	.17	3.15	439.5	3.61	19.94	.60	2.90	261.0	1.93	33.18
26	.10	1.19	642.5	.88	13.77	1.51	31.36	339.9	2.94	22.53
27	.45	16.42	897.3	6.74	9.60	.30	3.97	565.8	8.56	15.49
28	.18	4.07	439.8	2.69	19.87	1.02	12.34	257.2	1.85	31.72
29	1.21	26.68	917.1	4.22	9.22	1.11	25.17	606.5	4.12	13.66
30	1.96	128.47	661.6	3.39	10.21	.66	19.89	469.7	6.62	17.64
31	.30	4.11	457.5	2.31	19.09	.86	1.51	298.4	2.41	29.24
32	.20	5.04	626.4	.65	13.98	.87	19.42	310.6	1.83	25.81
BAG (CALC.)	.60	32.14	634.6	4.26	12.92	.61	11.54	416.1	4.65	20.35
BAG (ACT.)	.58	34.17	604.3	4.68	13.45	.65	11.69	406.0	4.76	20.81
33	.02	0.00	105.5	.12	84.05	.28	2.66	71.5	.11	115.93
34	.01	0.00	1319.2	2.11	6.73	4.14	39.80	883.5	1.28	9.25
35	.18	0.00	658.9	.35	13.46	1.60	20.82	541.5	.52	15.32
36	.12	0.00	497.7	.39	17.82	1.14	12.13	354.0	.34	23.56
37	.10	0.00	413.9	.51	21.43	.82	2.94	229.9	.56	37.43
38	.04	0.00	434.1	2.67	20.44	.10	.11	265.8	.74	33.33
39	.05	0.00	527.4	7.28	16.82	.08	0.00	333.2	5.58	26.62

EMISSION RESULTS IN GRAMS PER MILE (PER MINUTE FOR IDLE)
FUEL ECONOMY IN MILES PER GALLON (PER MINUTE FOR IDLE)

APPENDIX H

LISTING OF MODAL RESULTS ON INDIVIDUAL VEHICLES

ST. LOUIS

	VEH	YEAR	MAKE	MODL	CID	VEH	YEAR	MAKE	MODL	CID
	6021	1976	CADI	ELDO	500	6022	1976	CHEV	IMPA	350
MODE NO.	HC	CO	CO2	NOXC	FUEL ECONOMY	HC	CO	CO2	NOXC	FUEL ECONOMY
1	4.89	89.38	1743.1	5.40	4.67	.60	16.06	1583.0	6.03	5.51
2	3.12	86.97	380.8	1.11	16.83	.05	2.96	528.2	.46	16.65
3	7.69	211.35	1640.8	2.31	4.44	.58	18.91	1694.2	3.28	5.14
4	3.64	46.66	1119.0	2.72	7.37	.20	5.40	981.3	2.91	8.96
5	1.08	11.91	895.8	3.54	9.67	.17	2.00	889.6	4.12	9.94
6	1.39	19.55	288.8	.58	27.40	.36	2.21	276.6	.98	31.56
7	2.97	221.16	1162.7	3.88	5.84	1.80	104.77	1064.0	5.98	7.19
8	1.39	7.33	285.9	1.35	29.40	.31	3.42	306.6	2.78	28.36
9	.39	2.51	926.6	4.20	9.52	.14	1.72	912.0	6.86	9.70
10	1.98	18.82	299.9	.98	26.43	.17	1.56	342.5	1.61	25.69
11	1.26	20.38	1222.9	6.41	7.05	.55	19.55	1087.7	9.95	7.92
12	2.55	29.67	311.5	1.34	24.24	.16	2.25	321.2	2.05	27.29
13	1.29	29.30	1285.0	7.07	6.65	.47	16.44	1113.8	9.61	7.78
14	1.84	13.71	287.6	1.02	28.18	.10	.60	407.5	2.35	21.71
15	1.97	54.92	381.6	1.10	18.72	.05	.75	459.2	.57	19.27
16	7.51	244.98	888.4	1.34	6.84	.11	.65	1013.6	0.00	8.74
17	2.85	58.43	1211.7	6.01	6.76	.19	2.75	1108.4	7.52	7.97
18	2.77	38.94	293.0	.67	24.45	.13	.76	438.1	1.12	20.18
19	2.48	53.86	1182.0	4.48	6.96	.21	4.48	1029.0	4.78	8.56
20	3.73	62.23	353.2	1.03	19.18	.15	1.11	481.4	1.02	18.35
21	4.12	217.05	1280.7	4.65	5.43	2.02	108.93	1086.6	6.79	7.02
22	3.39	37.86	357.9	.86	20.73	.18	.51	401.8	2.27	22.01
23	5.27	118.64	1261.5	4.33	6.06	.26	5.08	1196.0	4.97	7.37
24	1.43	28.60	845.5	3.65	9.92	.11	.63	826.0	5.29	10.73
25	1.80	17.18	328.4	1.11	24.58	.14	.18	438.1	3.23	20.22
26	3.10	98.75	538.8	1.38	12.61	.08	.23	758.4	.62	11.69
27	2.06	43.28	1058.4	5.81	7.83	.26	6.68	921.3	7.87	9.52
28	3.38	39.19	314.4	1.13	22.95	.11	.30	472.7	2.37	18.74
29	4.63	142.72	1163.5	2.49	6.33	.16	.65	980.9	3.47	9.03
30	1.82	41.29	909.8	4.12	9.05	.21	5.99	821.3	4.47	10.68
31	2.62	20.71	303.7	1.54	25.76	.11	.65	480.8	3.68	18.41
32	3.69	99.13	373.5	1.20	16.41	.12	.57	620.8	.54	14.27
BAG (CALC.)	2.20	46.62	680.8	3.09	11.66	.26	8.46	677.2	4.70	12.84
BAG (ACT.)	2.36	47.74	667.3	2.95	11.84	.25	8.20	653.3	4.80	13.31
33	1.16	27.83	76.3	.04	71.76	.03	0.00	124.2	.27	71.44
34	15.27	328.18	972.5	.47	5.78	.88	0.00	1444.8	1.96	6.13
35	7.61	160.83	518.9	.35	11.15	.44	0.00	742.2	.96	11.94
36	3.67	65.38	686.8	3.38	11.08	.20	.05	534.7	.50	16.58
37	1.57	24.84	440.5	.71	18.32	.16	.87	484.4	.36	18.25
38	.16	.19	545.3	.99	16.25	.07	.18	484.9	1.55	18.28
39	.12	.12	597.6	2.36	14.84	.03	.01	562.3	4.27	15.78

EMISSION RESULTS IN GRAMS PER MILE (PER MINUTE FOR IDLE)
FUEL ECONOMY IN MILES PER GALLON (PER MINUTE FOR IDLE)

APPENDIX H

LISTING OF MODAL RESULTS ON INDIVIDUAL VEHICLES

ST. LOUIS

	VEH	YEAR	MAKE	MODL	CID	VEH	YEAR	MAKE	MODL	CID
	6023	1976	CHEV	MONT	350	6024	1976	CHEV	VEGA	140
MODE NO.	HC	CO	CO2	NOxC	FUEL ECONOMY	HC	CO	CO2	NOXC	FUEL ECONOMY
1	1.03	24.01	1128.2	8.07	7.59	2.32	89.30	799.9	3.21	9.37
2	.24	3.05	560.4	.29	15.68	1.67	44.48	213.3	.15	30.77
3	.68	19.20	1381.4	4.62	6.28	4.35	204.26	672.3	1.00	8.81
4	.70	19.72	927.0	3.05	9.24	1.11	34.61	546.5	1.73	14.68
5	.51	6.27	804.0	4.91	10.88	.55	10.33	511.3	2.97	16.77
6	.24	10.34	313.7	.72	26.84	.48	5.33	159.7	.10	52.32
7	3.07	200.11	875.7	3.34	7.40	.33	7.31	593.0	5.59	14.66
8	.49	6.47	286.5	1.83	29.77	.17	1.63	180.3	2.45	48.39
9	.43	5.19	651.3	7.14	13.43	.09	1.14	517.0	4.09	17.10
10	.32	7.11	317.6	1.24	26.91	1.21	12.89	164.6	1.11	47.04
11	1.36	40.71	938.5	8.41	8.82	.35	13.07	662.5	7.32	12.97
12	.41	5.81	359.5	1.66	24.00	2.29	17.22	162.7	1.79	45.04
13	1.13	34.39	930.3	8.17	8.98	.48	21.66	605.8	4.42	13.84
14	.30	3.50	405.9	1.83	21.52	1.55	7.15	198.1	1.51	41.42
15	.19	.60	558.9	.46	15.84	1.04	22.54	198.0	.28	37.48
16	0.00	2.96	1156.8	2.15	7.64	2.09	91.72	397.9	.50	16.18
17	.72	19.66	930.8	6.14	9.21	.86	38.96	613.3	4.69	13.11
18	.39	17.99	485.3	.65	17.24	2.28	20.78	183.1	.45	39.81
19	1.00	35.32	839.9	3.91	9.88	.85	36.72	517.7	2.57	15.35
20	.43	19.71	501.2	.92	16.63	3.34	29.93	195.0	.42	35.14
21	2.98	196.22	949.3	4.19	7.00	.65	28.60	641.8	4.48	12.89
22	.35	5.89	405.5	1.76	21.34	2.66	19.02	223.4	1.06	33.90
23	.51	7.65	1075.5	5.47	8.15	2.02	96.69	609.4	2.62	11.56
24	.41	8.74	673.4	4.71	12.89	.42	12.94	449.5	2.99	18.84
25	.30	7.25	450.4	2.15	19.18	.51	6.19	266.9	1.74	31.90
26	.34	6.98	718.3	.75	12.15	1.58	52.27	279.9	.24	24.18
27	.47	14.56	823.9	5.63	10.46	.64	31.44	495.0	3.35	16.24
28	.24	9.45	455.3	2.01	18.85	2.70	21.64	220.0	1.37	33.80
29	.99	40.17	775.2	3.23	10.55	2.38	89.90	433.7	1.52	15.24
30	.97	28.48	687.3	4.13	12.07	.62	23.54	406.5	2.40	19.93
31	.41	13.50	437.1	2.13	19.31	.60	13.35	258.2	2.29	31.58
32	.18	5.93	604.3	1.24	14.45	1.89	48.70	314.8	.39	22.34
BAG (CALC.)	.64	25.41	609.4	3.46	13.62	1.13	23.49	370.3	2.77	21.61
BAG (ACT.)	.66	24.45	592.6	3.50	14.02	1.16	24.01	360.0	2.81	22.11
33	.10	0.00	130.0	.34	68.11	.49	19.93	36.5	.02	127.84
34	1.15	0.00	1447.6	1.93	6.12	6.25	228.88	439.8	.26	10.83
35	.40	0.00	768.4	.72	11.53	2.80	93.88	277.6	.27	20.45
36	.31	0.00	528.3	.65	16.77	1.72	28.36	308.4	.43	24.76
37	.24	1.03	437.4	.36	20.18	.98	3.79	281.1	.34	30.58
38	.19	.78	432.5	1.31	20.43	.12	.02	285.4	.95	31.06
39	.18	.94	489.0	3.61	18.07	.05	0.00	321.5	4.36	27.59

EMISSION RESULTS IN GRAMS PER MILE (PER MINUTE FOR IDLE)
FUEL ECONOMY IN MILES PER GALLON (PER MINUTE FOR IDLE)

APPENDIX H

LISTING OF MODAL RESULTS ON INDIVIDUAL VEHICLES

ST. LOUIS

	VEH	YEAR	MAKE	MODL	CID	VEH	YEAR	MAKE	MODL	CID
	6025	1976	CHEV	STAW	400	6026	1976	CHEV	ELCA	305
MODE NO.	HC	CO	CO2	NOXC	FUEL ECONOMY	HC	CO	CO2	NOXC	FUEL ECONOMY
1	2.06	31.19	1091.4	16.41	7.74	.67	17.34	1049.6	9.70	8.23
2	.94	13.53	570.7	.44	14.92	.24	.22	392.8	.66	22.53
3	3.08	108.37	1152.5	4.85	6.66	.37	6.68	1079.7	3.75	8.13
4	.30	4.80	756.0	9.14	11.61	.18	.09	726.9	4.79	12.20
5	.14	1.07	709.8	10.07	12.47	.31	5.76	597.9	4.68	14.60
6	.40	1.55	402.0	.51	21.88	.19	.08	232.6	.37	38.05
7	2.46	149.29	794.3	7.77	8.56	.70	14.85	762.5	10.06	11.26
8	.20	1.40	495.0	1.33	17.83	.17	.06	249.9	.77	35.42
9	.10	1.42	698.6	11.63	12.66	.14	.17	553.2	8.34	16.02
10	.56	6.90	353.3	.72	24.26	.10	.09	247.4	.60	35.81
11	.36	17.13	1098.2	13.93	7.88	.29	5.70	761.9	10.31	11.50
12	.68	10.79	465.5	1.12	18.31	.15	.11	248.0	.55	35.70
13	.40	5.96	1106.2	13.64	7.95	.19	1.52	801.3	10.66	11.03
14	.40	.09	464.1	1.77	19.07	.10	.11	250.0	.91	35.42
15	.40	6.05	410.9	.63	21.05	.08	.22	327.4	.66	27.06
16	3.02	53.44	858.7	1.57	9.32	.20	0.00	782.2	.70	11.34
17	.74	20.65	901.2	13.51	9.48	.30	6.12	762.3	7.76	11.48
18	.64	.69	528.0	1.09	16.71	.11	.19	308.1	.56	28.75
19	.53	30.33	811.8	9.78	10.31	.15	1.57	657.8	6.59	13.43
20	.80	2.59	559.3	1.14	15.68	.11	.24	399.9	.53	22.16
21	1.67	130.42	836.2	10.15	8.48	.34	7.39	844.7	11.55	10.35
22	.64	3.12	441.5	1.87	19.79	.15	.17	288.4	.78	30.70
23	1.29	32.30	915.8	16.34	9.14	.13	.41	811.8	6.93	10.92
24	.12	1.78	622.4	8.70	14.19	.10	.73	567.6	6.21	15.60
25	.24	1.86	537.1	2.14	16.41	.11	.15	318.6	1.14	27.81
26	.52	6.83	729.9	1.45	11.96	.07	.36	474.4	.82	18.68
27	.37	8.93	882.8	11.59	9.88	.35	11.45	629.2	6.31	13.69
28	.72	9.91	528.4	1.26	16.25	.14	.28	325.6	1.00	27.18
29	1.33	31.67	735.2	8.67	11.25	.11	.37	719.6	3.95	12.32
30	.29	9.92	711.8	9.74	12.19	.12	.39	582.7	7.52	15.21
31	.25	2.82	571.0	1.88	15.40	.11	.11	340.1	1.50	26.06
32	.87	19.37	684.1	.97	12.37	.14	.62	455.5	.87	19.42
BAG (CALC.)	.55	16.27	687.8	5.73	12.41	.17	2.46	481.0	3.80	18.28
BAG (ACT.)	.60	15.78	674.2	5.91	12.66	.17	2.50	463.9	3.86	18.95
33	.59	8.74	102.1	.08	75.38	.04	0.00	86.4	.17	102.58
34	6.93	70.31	1271.3	.99	6.32	1.40	0.00	991.2	1.11	8.91
35	.47	.29	838.1	.87	10.57	.85	0.00	703.2	.55	12.57
36	.27	0.00	566.7	.58	15.64	.35	0.00	422.6	.36	20.95
37	.13	.05	600.7	.94	14.76	.07	0.00	325.2	1.10	27.28
38	.07	0.00	488.1	1.64	18.17	.12	0.00	357.5	1.05	24.80
39	.04	.01	557.7	5.43	15.91	.05	0.00	375.0	2.37	23.66

EMISSION RESULTS IN GRAMS PER MILE (PER MINUTE FOR IDLE)
FUEL ECONOMY IN MILES PER GALLON (PER MINUTE FOR IDLE)

APPENDIX H

LISTING OF MODAL RESULTS ON INDIVIDUAL VEHICLES

ST. LOUIS

	VEH	YEAR	MAKE	MODL	CID	VEH	YEAR	MAKE	MODL	CID
	6027	1976	CHEV	NOVA	250	6029	1976	DODG	STAW	318
MODE NO.	HC	CO	CO2	NOXC	FUEL ECONOMY	HC	CO	CO2	NOXC	FUEL ECONOMY
1	4.57	38.70	1042.1	7.94	7.94	4.88	45.83	945.8	12.51	8.59
2	1.14	13.52	306.7	.66	26.77	2.43	27.87	319.0	1.43	23.95
3	1.22	42.02	1168.8	4.43	7.17	7.31	78.89	975.7	1.31	7.90
4	1.43	9.17	755.2	4.16	11.47	1.79	5.86	612.7	6.70	14.14
5	.09	1.30	570.5	5.48	15.49	.49	2.19	651.6	9.43	13.52
6	.98	1.76	183.2	.93	46.93	.58	2.21	193.3	1.08	44.69
7	1.80	99.77	652.2	5.17	10.89	1.40	12.51	782.7	11.74	11.00
8	1.00	1.07	198.6	.87	43.63	.54	1.30	186.7	3.59	46.59
9	.12	.99	594.7	6.20	14.88	.48	1.19	615.6	10.18	14.34
10	.79	5.83	198.4	.63	42.25	2.51	4.26	215.6	2.03	38.55
11	2.23	86.54	666.5	5.01	10.96	1.60	31.82	784.1	13.84	10.58
12	1.00	7.25	188.9	.54	43.61	2.57	7.19	197.3	2.54	40.94
13	2.32	73.87	664.1	5.15	11.27	1.30	14.18	834.4	18.04	10.31
14	.76	2.37	233.0	1.04	37.11	1.37	1.58	229.3	2.73	37.59
15	.68	9.35	235.8	.79	35.13	.91	9.94	190.5	.74	42.46
16	3.14	61.77	671.8	.78	11.40	5.52	60.98	436.3	0.00	16.15
17	2.89	70.00	666.2	5.57	11.30	1.99	14.89	856.6	14.87	10.01
18	.82	3.27	241.1	1.20	35.67	1.42	5.43	220.3	1.48	38.03
19	1.91	32.27	615.9	6.28	13.19	1.64	14.87	821.6	13.70	10.44
20	.90	6.71	291.5	1.43	29.11	2.62	11.15	251.8	1.55	31.96
21	4.24	139.84	635.9	3.97	10.21	2.55	47.52	914.5	14.72	8.90
22	1.22	8.42	257.3	1.04	32.35	2.83	6.46	240.5	2.11	34.18
23	1.32	49.46	794.8	5.97	10.12	3.12	53.97	965.7	11.28	8.37
24	.13	3.22	491.6	5.25	17.86	.55	2.25	583.9	3.45	15.06
25	.61	1.47	277.9	1.36	31.46	.43	1.40	328.0	9.40	26.77
26	.82	8.43	305.3	.91	27.63	.98	14.99	346.8	.74	23.76
27	.91	20.36	624.0	6.52	13.47	1.11	10.15	687.8	8.76	12.55
28	1.05	6.81	295.0	1.22	28.72	2.50	4.26	273.8	6.94	30.77
29	1.40	41.89	681.9	2.74	11.80	2.99	50.95	715.1	.22	11.03
30	.41	10.15	477.1	6.13	17.95	.63	2.28	632.0	2.85	13.92
31	.63	2.14	286.5	1.38	30.41	.18	.96	291.1	11.48	30.27
32	.98	15.41	375.6	1.11	22.03	1.71	7.92	365.7	.64	23.14
BAG (CALC.)	.97	21.81	437.8	2.91	18.68	1.62	11.74	470.2	8.02	17.97
BAG (ACT.)	1.03	21.37	420.5	2.98	19.41	1.72	11.25	466.8	8.18	18.11
33	.61	9.85	69.6	.02	101.97	.66	5.82	90.5	.15	87.23
34	5.49	130.10	838.5	.71	8.37	6.90	70.74	1130.7	1.54	7.02
35	2.81	23.68	591.6	.36	13.92	3.41	31.71	552.9	.65	14.47
36	.64	2.26	643.8	.89	13.67	2.07	15.95	400.3	.42	20.55
37	.59	.76	263.8	1.01	33.26	.32	.48	320.4	1.52	27.55
38	.13	.15	302.3	2.22	29.29	.16	.18	351.1	2.61	25.22
39	.05	.01	370.1	2.21	23.97	.15	.26	398.2	6.15	22.24

EMISSION RESULTS IN GRAMS PER MILE (PER MINUTE FOR IDLE)
FUEL ECONOMY IN MILES PER GALLON (PER MINUTE FOR IDLE)

APPENDIX H

LISTING OF MODAL RESULTS ON INDIVIDUAL VEHICLES

ST. LOUIS

	VEH	YEAR	MAKE	MODL	CID	VEH	YEAR	MAKE	MODL	CID
	6030	1976	DODG	ASPE	225	6031	1976	FORD	MUST	140
MODE NO.	HC	CO	CO2	NOXC	FUEL ECONOMY	HC	CO	CO2	NOXC	FUEL ECONOMY
1	2.89	70.97	792.7	3.43	9.72	.77	8.56	811.2	5.70	10.73
2	1.66	9.06	281.6	.76	29.47	.05	2.18	281.5	1.33	31.13
3	3.98	78.39	683.9	.70	10.83	.58	3.70	936.4	1.96	9.40
4	1.33	17.52	511.1	1.64	16.35	.63	2.46	525.8	3.31	16.69
5	.89	10.58	446.9	2.31	19.03	.47	3.99	580.4	3.91	15.09
6	.21	.02	249.8	.53	35.43	.09	1.34	180.5	.70	48.52
7	1.58	61.55	552.6	5.13	13.56	1.01	70.25	662.4	5.70	11.44
8	.20	.92	244.6	1.96	35.98	.09	.99	215.7	1.94	40.81
9	.39	5.53	462.0	3.53	18.81	.37	3.10	509.8	6.11	17.21
10	1.35	1.42	232.4	1.06	37.15	.05	.74	192.6	1.12	45.76
11	1.17	41.64	630.3	7.50	12.69	.70	55.41	714.5	4.79	11.04
12	1.78	2.41	243.7	1.46	35.06	0.00	1.27	203.0	.72	43.29
13	.99	30.52	635.9	5.46	12.92	.85	98.68	648.3	2.02	11.01
14	.62	1.41	283.4	1.43	30.87	.01	.65	239.3	.99	36.92
15	.24	.22	262.0	.71	33.73	.02	.03	276.8	1.15	32.06
16	1.76	21.63	412.0	.65	19.66	.01	.94	529.4	2.13	16.72
17	1.80	42.08	580.8	4.12	13.60	.63	34.16	743.7	1.85	11.10
18	.99	1.07	310.7	.60	28.13	.03	0.00	233.9	.74	37.93
19	1.62	30.97	468.4	2.73	17.00	.65	42.26	666.8	1.30	12.07
20	1.91	2.88	315.1	.51	27.25	.02	.18	296.5	.85	29.90
21	1.82	78.22	602.4	6.81	12.14	1.06	118.20	716.2	2.43	9.80
22	1.61	2.72	307.6	1.49	28.00	.07	.71	263.6	1.60	33.50
23	2.04	55.64	492.2	1.78	15.14	.56	.66	750.6	3.63	11.78
24	.70	17.45	451.6	2.55	18.44	.34	7.91	537.6	4.17	16.10
25	.31	2.74	346.5	1.79	25.23	.10	.46	268.9	2.48	32.88
26	.59	2.64	429.8	.71	20.37	.14	0.00	436.8	2.22	20.30
27	1.02	26.22	506.5	3.49	16.11	.35	5.49	608.7	5.25	14.35
28	1.48	3.50	311.0	1.30	27.64	.09	.88	283.8	1.77	31.09
29	1.59	46.61	329.7	.71	21.75	.40	2.91	510.3	2.19	17.20
30	.82	22.09	380.4	2.61	21.25	.32	6.89	500.9	3.68	17.31
31	.19	4.18	392.9	1.68	22.19	.12	.97	314.2	3.02	28.07
32	.57	2.39	433.0	.69	20.24	.07	.67	370.0	1.42	23.90
BAG (CALC.)	1.15	17.17	410.9	2.76	20.10	.28	14.61	434.8	2.62	19.35
BAG (ACT.)	1.17	17.45	390.4	2.83	21.06	.28	15.43	421.1	2.68	19.89
33	.38	8.83	43.8	.04	150.61	.04	0.00	68.8	.04	128.74
34	4.68	82.81	572.8	.50	12.36	.37	0.00	826.2	.45	10.73
35	2.89	8.81	516.4	.87	16.45	.19	.07	514.8	.45	17.22
36	1.39	5.09	351.6	.76	24.39	.15	.10	351.3	.30	25.22
37	.55	.53	297.6	.72	29.57	.20	.29	271.2	1.26	32.59
38	.21	.16	325.2	1.20	27.21	.26	.29	298.0	1.72	29.65
39	.18	2.35	382.6	3.73	22.94	.23	.64	348.9	4.66	25.31

EMISSION RESULTS IN GRAMS PER MILE (PER MINUTE FOR IDLE)
FUEL ECONOMY IN MILES PER GALLON (PER MINUTE FOR IDLE)

APPENDIX H

LISTING OF MODAL RESULTS ON INDIVIDUAL VEHICLES

ST. LOUIS

	VEH	YEAR	MAKE	MODL	CID	VEH	YEAR	MAKE	MODL	CID
	6032	1976	FORD	STAW	400	6033	1976	FORD	STAW	351
MODE NO.	HC	CO	CO2	NOXC	FUEL ECONOMY	HC	CO	CO2	NOXC	FUEL ECONOMY
1	5.67	151.50	1216.2	2.41	6.03	1.01	1.90	1223.1	4.50	7.22
2	1.16	.14	498.0	.49	17.68	.32	4.23	455.3	1.31	19.17
3	1.63	26.49	1169.6	.45	7.30	.44	5.42	1002.0	2.42	8.77
4	.99	13.24	877.5	2.01	9.85	.58	2.88	849.4	2.63	10.37
5	.77	3.37	848.6	2.57	10.36	.51	3.60	568.5	2.46	15.41
6	.94	.03	340.9	.75	25.81	.56	.20	372.3	.85	23.71
7	2.21	208.56	1019.0	1.96	6.56	1.95	231.10	770.2	2.11	7.79
8	.35	.25	441.8	1.27	20.02	.38	.61	387.3	1.15	22.79
9	.70	48.88	822.9	1.89	9.84	.54	57.71	759.3	2.04	10.42
10	.45	.04	365.9	.71	24.16	.36	.08	392.5	1.05	22.54
11	2.23	196.71	920.3	1.29	7.18	1.13	146.77	950.3	1.60	7.49
12	.41	.71	450.6	1.09	19.59	.38	.92	415.3	1.33	21.23
13	1.74	153.37	1022.9	1.72	6.99	.85	88.56	1052.0	1.94	7.43
14	.34	.26	470.8	.96	18.79	.29	1.14	413.4	1.05	21.33
15	.28	.73	510.7	.53	17.31	.16	2.61	342.4	1.11	25.58
16	.61	4.56	964.3	.53	9.12	.51	0.00	916.8	2.15	9.66
17	1.75	61.27	976.2	2.13	8.23	.81	37.23	1086.4	2.69	7.74
18	.45	.45	453.9	.74	19.46	.45	.83	347.2	.66	25.36
19	.77	22.53	904.4	2.59	9.42	.60	2.39	830.3	2.57	10.62
20	.43	.77	603.0	.99	14.66	.44	.65	476.8	.89	18.52
21	2.38	254.90	1069.5	1.43	6.01	1.57	140.05	969.9	2.87	7.43
22	.38	1.31	523.9	1.09	16.84	.42	1.77	357.9	1.10	24.51
23	.70	21.51	971.0	2.54	8.81	.53	2.66	1018.3	4.52	8.67
24	.72	45.89	705.8	2.08	11.38	.47	30.95	753.1	1.94	11.05
25	.25	1.59	575.4	1.47	15.34	.36	.73	462.8	1.47	19.08
26	.19	1.60	754.3	.34	11.72	.25	1.68	673.3	1.13	13.11
27	.90	45.89	877.6	1.83	9.32	.51	31.05	894.9	2.27	9.39
28	.37	1.14	544.0	1.25	16.23	.40	.24	411.4	1.33	21.49
29	.86	35.75	821.7	1.46	10.08	.33	2.01	875.8	2.62	10.09
30	.87	55.33	663.9	1.19	11.78	.58	64.33	699.5	1.79	11.06
31	.21	.94	583.0	1.75	15.17	.34	.10	427.7	1.55	20.69
32	.27	2.57	700.7	.50	12.58	.20	.28	518.3	1.02	17.09
BAG (CALC.)	.83	44.27	700.9	1.47	11.48	.46	28.65	630.3	1.85	13.11
BAG (ACT.)	.90	45.30	687.3	1.47	11.66	.47	29.51	616.8	1.77	13.35
33	1.23	31.31	70.7	.11	71.69	.07	0.00	103.9	.26	85.24
34	18.78	412.38	779.8	.28	5.97	1.15	0.00	1271.3	2.06	6.96
35	9.38	199.47	412.1	.14	11.75	.82	0.00	690.3	.78	12.81
36	4.77	130.68	343.7	.18	15.73	.41	0.00	491.5	.78	18.01
37	.73	.19	467.9	.70	18.86	.24	0.00	404.4	1.03	21.90
38	.24	.21	512.6	1.12	17.28	.24	.08	466.2	1.29	19.00
39	.12	.29	618.8	1.98	14.32	.17	.14	536.7	2.40	16.51

EMISSION RESULTS IN GRAMS PER MILE (PER MINUTE FOR IDLE)
FUEL ECONOMY IN MILES PER GALLON (PER MINUTE FOR IDLE)

APPENDIX H

LISTING OF MODAL RESULTS ON INDIVIDUAL VEHICLES

ST. LOUIS

	VEH	YEAR	MAKE	MODL	CID	VEH	YEAR	MAKE	MODL	CID
	6034	1976	FORD	GRAN	250	6035	1976	FORD	GRAN	302
MODE NO.	HC	CO	CO2	NOXC	FUEL ECONOMY	HC	CO	CO2	NOXC	FUEL ECONOMY
1	.39	2.00	1277.6	5.62	6.92	1.19	2.22	1087.9	5.74	8.10
2	.35	1.35	329.0	.53	26.72	.43	.90	453.8	1.36	19.44
3	.80	5.12	1263.0	2.95	6.97	.92	3.87	1148.6	4.56	7.67
4	.60	1.41	787.2	3.68	11.22	.73	.93	699.8	3.63	12.61
5	.66	1.13	727.9	3.91	12.13	.67	.72	533.7	3.78	16.53
6	.69	1.07	189.2	.23	45.97	.41	.81	288.0	.52	30.55
7	1.14	82.41	968.0	4.76	8.06	1.44	25.61	663.2	6.74	12.54
8	.43	.55	237.4	.17	37.03	.71	.38	256.6	.57	34.21
9	.50	1.94	821.9	5.29	10.74	.82	1.78	550.2	5.32	15.97
10	.46	.48	257.3	.35	34.20	.49	.90	304.6	.56	28.85
11	.51	5.85	1015.4	6.20	8.65	1.08	5.42	730.7	7.60	11.95
12	.50	1.52	202.7	.30	42.95	.54	1.37	323.9	.59	27.08
13	.43	3.09	983.8	6.47	8.97	.92	1.59	784.6	7.74	11.23
14	.40	1.00	290.1	.24	30.30	.46	.69	296.4	.65	29.69
15	.51	2.87	251.6	.44	34.43	.14	.56	370.6	1.38	23.87
16	.93	5.20	719.2	0.00	12.15	0.00	0.00	609.4	.68	14.57
17	.59	2.59	1000.1	5.69	8.82	1.12	6.56	859.1	5.04	10.17
18	.57	1.64	310.1	.24	28.22	.37	.25	295.7	.55	29.86
19	.72	2.30	889.6	6.06	9.91	.85	.75	594.9	4.61	14.82
20	.63	1.82	351.4	.21	24.91	.41	1.39	452.5	1.02	19.47
21	1.31	106.78	1034.7	5.31	7.36	1.53	28.45	877.6	7.62	9.57
22	.45	1.24	296.9	.34	29.56	.51	.42	363.4	.86	24.27
23	.70	3.89	955.8	4.45	9.21	1.13	12.66	734.2	4.21	11.71
24	.43	1.41	703.6	5.34	12.55	.71	.62	545.4	4.60	16.18
25	.40	.47	324.0	.62	27.22	.43	.14	372.9	.87	23.70
26	.81	.23	407.4	.95	21.63	.29	.27	522.8	1.25	16.93
27	.49	1.73	839.1	5.31	10.52	.87	.98	686.7	5.11	12.84
28	.49	.53	381.1	.30	23.14	.48	.36	363.4	.75	24.29
29	.59	1.14	838.1	3.01	10.54	.69	.85	783.8	3.08	11.27
30	.65	24.57	789.8	4.64	10.69	.87	1.80	534.7	5.31	16.43
31	.30	.45	352.8	.41	25.04	.57	.83	360.9	.91	24.38
32	.57	1.72	376.4	.85	23.30	.24	3.05	482.2	1.30	18.20
BAG (CALC.)	.47	6.82	570.6	2.43	15.23	.60	2.67	516.7	2.78	16.98
BAG (ACT.)	.48	6.32	543.3	2.35	16.00	.66	2.44	520.1	2.74	16.87
33	.27	10.65	66.5	.02	105.50	1.71	34.66	45.3	.02	84.41
34	14.63	348.65	505.8	.25	8.07	25.63	422.50	564.5	.26	6.78
35	7.98	174.43	253.5	.13	16.05	10.64	200.60	304.7	.13	13.58
36	3.52	101.51	215.2	.17	23.00	4.04	110.39	256.2	.17	20.06
37	1.52	23.05	307.9	1.58	25.44	.34	.14	330.9	1.76	26.72
38	.56	.45	397.7	.66	22.18	.37	.24	375.5	.94	23.54
39	.27	.35	475.1	2.61	18.63	.31	.53	424.1	1.55	20.84

EMISSION RESULTS IN GRAMS PER MILE (PER MINUTE FOR IDLE)
FUEL ECONOMY IN MILES PER GALLON (PER MINUTE FOR IDLE)

APPENDIX H

LISTING OF MODAL RESULTS ON INDIVIDUAL VEHICLES

ST. LOUIS

	VEH	YEAR	MAKE	MODL	CID	VEH	YEAR	MAKE	MODL	CID
	6036	1976	FORD	TORI	351	6037	1976	MERC	COME	250
MODE NO.	HC	CO	CO2	NOXC	FUEL ECONOMY	HC	CO	CO2	NOXC	FUEL ECONOMY
1	1.28	29.87	884.8	2.21	9.48	.58	2.95	761.7	4.67	11.55
2	.39	2.96	432.0	.82	20.27	.52	1.94	439.7	.23	19.97
3	.79	7.89	933.0	1.26	9.36	1.07	3.42	685.8	1.81	12.78
4	.45	2.29	516.9	2.12	17.00	.71	1.25	391.0	2.40	22.46
5	.46	1.07	579.6	2.72	15.23	.77	5.50	550.9	.90	15.79
6	.41	0.00	402.3	.69	21.99	.29	.89	397.2	.20	22.22
7	1.03	124.58	683.4	1.69	10.06	1.00	50.69	637.8	1.62	12.32
8	.30	1.53	522.3	1.24	16.88	.17	.65	486.2	.93	18.19
9	.42	5.31	591.1	2.12	14.77	.36	2.67	613.9	2.47	14.33
10	.35	.89	367.6	.73	23.98	.40	.65	413.0	.75	21.37
11	.76	91.22	860.7	1.36	8.82	.47	19.51	805.1	3.04	10.60
12	.37	2.51	445.8	.84	19.68	.35	1.22	423.4	1.04	20.81
13	.63	61.42	851.5	1.74	9.34	.32	8.46	853.2	3.24	10.23
14	.26	.57	432.2	.95	20.46	.22	1.25	394.6	.86	22.34
15	.10	.56	447.0	.49	19.80	.75	1.43	374.9	.22	23.38
16	.19	1.84	809.4	.59	10.92	.88	4.06	825.7	.16	10.63
17	.53	9.72	734.9	2.41	11.80	.52	4.74	763.9	2.71	11.48
18	.29	2.81	431.1	.51	20.34	.33	1.29	424.8	.32	20.74
19	.47	4.37	640.6	2.50	13.68	1.11	46.77	564.8	1.73	13.83
20	.32	1.94	460.0	.74	19.13	.25	1.52	474.7	.36	18.57
21	1.24	145.54	869.1	1.40	8.06	1.69	140.71	741.2	2.24	9.17
22	.32	1.96	435.2	.81	20.20	.33	1.02	429.5	1.00	20.54
23	.45	10.09	731.6	2.83	11.85	.39	1.31	618.4	3.84	14.28
24	.40	19.41	513.7	1.82	16.27	.66	16.41	609.7	1.17	13.92
25	.24	.61	533.5	1.23	16.58	.21	.33	467.8	1.20	18.92
26	.18	.94	633.5	.78	13.96	.56	3.99	508.0	.47	17.20
27	.44	10.52	693.2	2.25	12.48	.38	2.69	748.2	2.62	11.78
28	.34	1.67	468.4	1.08	18.80	.33	.98	416.1	.89	21.20
29	.36	6.08	476.3	2.38	18.23	.33	1.67	649.1	2.63	13.60
30	.64	42.84	424.4	1.43	17.97	1.06	50.02	531.7	.99	14.46
31	.25	2.87	584.0	1.42	15.06	.17	1.01	435.4	1.24	20.29
32	.24	5.66	535.4	.63	16.28	.76	2.50	564.1	.54	15.56
BAG (CALC.)	.38	20.10	585.6	1.50	14.35	.42	14.49	580.1	1.69	14.69
BAG (ACT.)	.40	18.89	592.3	1.50	14.24	.46	13.93	563.3	1.54	15.13
33	1.09	8.09	66.0	.02	107.95	.49	10.19	69.7	.02	101.69
34	13.03	150.47	748.2	.25	8.65	17.56	295.05	565.6	.26	8.18
35	.93	3.45	736.1	.25	11.92	8.66	148.33	294.2	.13	16.00
36	.36	1.39	491.5	.34	17.94	3.03	58.78	315.5	.17	21.26
37	.25	.02	419.5	.94	21.12	.52	.07	338.7	.26	26.07
38	.22	.13	485.8	1.15	18.24	.45	.38	376.3	.63	23.46
39	.15	.18	544.0	2.36	16.29	.25	.31	469.1	3.71	18.87

EMISSION RESULTS IN GRAMS PER MILE (PER MINUTE FOR IDLE)
FUEL ECONOMY IN MILES PER GALLON (PER MINUTE FOR IDLE)

APPENDIX H

LISTING OF MODAL RESULTS ON INDIVIDUAL VEHICLES

ST. LOUIS

	VEH	YEAR	MAKE	MODL	CID	VEH	YEAR	MAKE	MODL	CID
	6038	1976	MERC	MONA	200	6039	1976	OLDS	CUTL	260
MODE NO.	HC	CO	CO2	NOXC	FUEL ECONOMY	HC	CO	CO2	NOXC	FUEL ECONOMY
1	.61	.28	758.5	6.85	11.67	.18	2.83	1275.5	8.90	6.93
2	.26	0.00	350.2	.80	25.29	.00	1.84	411.0	.69	21.44
3	.67	.08	732.4	1.88	12.08	.10	2.33	1410.6	5.83	6.27
4	.43	.09	559.6	2.79	15.82	.07	1.56	829.4	2.84	10.67
5	.43	.09	482.9	3.90	18.32	.14	.76	661.8	5.16	13.38
6	.29	.06	271.5	0.00	32.56	.05	1.42	267.1	1.69	32.94
7	.64	1.52	671.6	5.69	13.13	2.04	60.14	887.4	10.76	8.98
8	.19	.08	298.8	.14	29.63	.07	.54	296.0	2.67	29.87
9	.28	.16	553.5	4.69	16.00	.11	.69	697.1	10.92	12.71
10	.26	.12	255.7	.06	34.58	.03	1.15	277.8	1.34	31.73
11	.41	.92	804.1	6.17	11.00	.58	14.32	933.2	15.59	9.27
12	.23	.17	292.1	.04	30.28	.08	1.77	289.9	1.56	30.30
13	.36	.57	756.1	6.25	11.71	.39	9.67	912.8	14.95	9.55
14	.21	.09	299.5	.31	29.56	.03	.93	342.8	2.00	25.77
15	.26	.12	358.8	.94	24.67	.15	2.78	357.1	1.28	24.52
16	.68	.46	663.5	.47	13.32	.29	5.10	576.8	1.82	15.15
17	.39	.30	717.7	5.86	12.34	.20	2.87	935.7	10.46	9.43
18	.24	.09	301.1	.19	29.39	.04	1.75	301.8	1.89	29.13
19	.43	.23	602.5	4.72	14.69	.09	2.50	800.2	7.11	11.03
20	.26	.20	340.8	.34	25.95	.08	1.91	392.1	2.29	22.45
21	.62	14.33	807.9	5.14	10.66	2.08	74.05	902.9	12.59	8.65
22	.18	.23	321.6	.50	27.52	.07	1.77	362.8	2.20	24.26
23	.44	.44	603.0	4.66	14.67	.26	9.40	1102.0	5.24	7.94
24	.29	.28	510.0	4.03	17.36	.11	1.63	641.3	7.70	13.78
25	.20	.15	290.0	.41	30.52	.05	.68	377.6	2.59	23.43
26	.33	.27	421.5	2.88	20.98	.07	1.69	539.6	.97	16.36
27	.31	.23	617.8	4.54	14.33	.15	1.94	768.2	11.96	11.50
28	.26	.17	308.3	.25	28.69	.05	1.22	369.7	2.20	23.87
29	.42	.24	544.9	2.12	16.24	.28	6.22	793.4	4.21	11.04
30	.35	.40	481.3	3.57	18.37	1.01	30.73	633.8	7.83	12.95
31	.17	.17	411.8	.55	21.51	.06	1.11	377.6	2.48	23.39
32	.30	.35	404.1	1.26	21.88	.14	3.79	410.8	1.49	21.27
BAG (CALC.)	.28	.75	476.8	2.21	18.53	.25	6.92	579.5	5.81	15.01
BAG (ACT.)	.30	.72	463.4	2.10	19.07	.27	6.30	558.3	6.00	15.60
33	.56	9.08	54.6	.10	125.57	.01	0.00	94.4	.44	94.01
34	8.74	171.21	610.4	.74	9.78	3.51	4.51	1136.3	3.77	7.69
35	4.39	57.44	439.3	.49	16.33	.56	.90	638.0	.63	13.84
36	2.82	36.34	451.6	1.56	17.14	.28	.25	433.9	.58	20.40
37	1.36	19.03	255.9	2.74	30.60	.23	.00	362.8	.79	24.42
38	.28	0.00	329.5	.30	26.87	.07	0.00	387.6	2.19	22.89
39	.22	0.00	355.5	1.13	24.91	.05	0.00	486.8	2.89	18.23

EMISSION RESULTS IN GRAMS PER MILE (PER MINUTE FOR IDLE)
FUEL ECONOMY IN MILES PER GALLON (PER MINUTE FOR IDLE)

APPENDIX H

LISTING OF MODAL RESULTS ON INDIVIDUAL VEHICLES

ST. LOUIS

	VEH	YEAR	MAKE	MODL	CID	VEH	YEAR	MAKE	MODL	CID
	6040	1976	OLDS	CUTL	350	6041	1976	OLDS	DELT	455
MODE NO.	HC	CO	CO2	NOXC	FUEL ECONOMY	HC	CO	CO2	NOXC	FUEL ECONOMY
1	4.06	95.58	956.2	3.26	7.93	6.01	94.66	1385.8	2.47	5.71
2	3.88	30.91	327.1	1.15	22.87	5.47	29.24	395.9	.69	19.33
3	9.96	233.43	1030.5	1.27	6.21	14.91	245.59	1057.5	.71	5.95
4	2.42	45.05	723.7	2.05	11.06	2.05	43.00	744.5	1.38	10.84
5	.23	1.76	636.3	2.48	13.87	.17	1.06	812.3	2.17	10.90
6	.67	.59	274.7	.84	31.96	.70	.97	355.8	.60	24.69
7	1.80	92.88	823.5	4.63	9.10	.60	16.05	1005.6	3.45	8.59
8	.30	.30	390.5	1.54	22.65	.19	.33	492.6	1.86	17.98
9	.24	1.28	646.4	3.58	13.67	.17	4.00	777.2	2.45	11.32
10	2.64	7.05	306.4	1.08	27.23	2.83	9.76	343.5	1.01	24.13
11	.80	15.47	925.9	5.42	9.32	.95	34.10	1092.3	4.52	7.73
12	2.63	11.92	356.0	1.44	23.17	3.87	12.03	460.8	1.36	18.04
13	.87	20.46	914.2	6.76	9.35	1.48	39.53	1074.2	3.32	7.78
14	.99	1.99	358.7	1.56	24.32	1.17	3.33	415.0	1.50	20.93
15	.47	4.71	353.1	1.93	24.52	.18	2.74	481.3	.33	18.26
16	7.62	121.17	554.9	1.15	11.53	7.03	175.22	731.4	.16	8.62
17	1.98	44.20	864.3	4.71	9.44	2.99	58.55	976.2	2.30	8.24
18	1.50	7.05	351.8	.98	24.14	1.55	2.56	446.7	.73	19.48
19	1.55	32.84	788.0	4.31	10.51	1.54	41.81	811.5	1.67	10.06
20	3.34	13.63	354.0	1.09	22.99	3.66	14.59	446.6	.72	18.45
21	3.02	128.17	909.8	4.25	7.92	2.82	76.68	1050.8	5.11	7.52
22	2.96	8.75	379.0	1.43	22.07	3.86	13.31	493.8	1.66	16.84
23	3.32	99.95	835.1	1.95	8.85	6.92	119.68	900.8	1.23	7.99
24	.25	6.77	626.6	2.97	13.91	.11	11.03	665.3	1.10	12.99
25	.22	.97	442.4	1.84	19.96	.09	.34	551.3	2.24	16.08
26	.48	5.06	639.5	2.56	13.68	.95	7.31	740.0	.48	11.76
27	.89	22.63	780.5	4.58	10.84	2.05	45.24	871.6	3.06	9.35
28	2.59	11.31	402.4	1.36	20.72	3.95	13.65	570.9	1.47	14.67
29	4.06	106.72	699.0	1.52	10.09	9.48	114.70	700.2	1.44	9.75
30	.77	29.95	619.5	2.73	13.27	.53	25.12	753.1	1.60	11.17
31	.16	.41	467.7	2.22	18.93	.16	.53	605.0	2.30	14.64
32	.88	7.13	436.5	1.33	19.70	3.80	33.87	555.2	.62	14.30
BAG (CALC.)	1.73	24.60	570.7	2.79	14.43	2.43	27.48	683.8	2.37	12.08
BAG (ACT.)	1.78	24.24	550.4	2.83	14.94	2.64	28.58	636.2	2.44	12.87
33	1.36	26.79	49.6	.02	92.49	3.28	29.23	49.5	0.00	83.84
34	17.95	311.89	663.5	.26	7.33	30.77	339.59	640.3	0.00	6.98
35	6.77	115.69	513.0	.25	12.39	7.53	127.24	638.2	.38	10.30
36	4.12	74.03	342.8	.17	18.80	4.02	72.24	463.5	.26	15.05
37	.18	0.00	344.2	1.20	25.75	.15	0.00	457.8	.42	19.37
38	.34	0.00	431.1	1.03	20.54	.09	0.00	502.8	.89	17.64
39	.08	0.00	510.9	2.34	17.36	.08	.07	582.3	3.25	15.23

EMISSION RESULTS IN GRAMS PER MILE (PER MINUTE FOR IDLE)
FUEL ECONOMY IN MILES PER GALLON (PER MINUTE FOR IDLE)

APPENDIX H

LISTING OF MODAL RESULTS ON INDIVIDUAL VEHICLES

ST. LOUIS

	VEH	YEAR	MAKE	MODL	CID	VEH	YEAR	MAKE	MODL	CID
	6042	1976	PLYM	DUST	225	6043	1976	PLYM	VOLA	318
MODE NO.	HC	CO	CO2	NOXC	FUEL ECONOMY	HC	CO	CO2	NOXC	FUEL ECONOMY
1	9.63	155.16	494.9	2.21	11.54	4.24	14.15	1194.9	2.85	7.21
2	3.68	38.66	284.8	.85	24.84	4.63	4.02	309.9	1.28	26.82
3	7.26	123.84	662.6	1.99	10.08	9.49	16.90	1142.3	.69	7.40
4	2.65	91.07	323.6	1.45	18.68	3.82	8.33	726.4	1.36	11.81
5	1.51	37.84	330.1	1.71	22.51	2.00	4.29	713.2	2.30	12.22
6	.38	2.38	193.0	.58	44.83	5.18	2.74	268.6	.73	30.68
7	1.78	86.49	481.3	3.71	14.25	2.06	8.50	872.0	7.15	9.95
8	.29	1.23	258.9	1.18	33.91	2.37	2.29	278.7	1.36	30.62
9	.63	17.09	449.4	2.45	18.56	2.04	4.67	727.6	2.87	11.97
10	1.75	2.65	204.1	.89	41.51	5.33	2.36	238.7	.93	34.23
11	2.74	80.19	476.4	4.63	14.52	1.48	10.26	933.1	6.15	9.30
12	2.33	3.05	217.1	.99	38.70	6.14	2.71	261.4	1.11	31.13
13	3.20	88.91	464.1	3.73	14.46	1.70	5.96	890.0	5.65	9.81
14	.72	1.21	229.0	.77	38.06	3.73	2.47	333.1	1.20	25.44
15	.77	1.61	219.5	.95	39.53	1.85	1.82	307.3	1.30	28.08
16	4.34	110.85	479.5	.17	13.30	3.66	10.94	531.0	.48	15.85
17	5.84	157.19	436.4	2.33	12.64	2.11	7.16	873.3	3.62	9.96
18	1.12	4.40	252.5	.45	33.75	5.79	3.35	278.6	.60	29.37
19	3.10	83.21	351.6	2.19	18.03	1.92	5.19	781.2	2.38	11.16
20	2.86	6.62	279.0	.57	29.74	7.24	3.86	348.5	.86	23.51
21	5.41	122.19	446.9	3.47	13.53	1.96	8.88	940.0	7.02	9.24
22	2.29	7.51	260.2	.91	31.78	5.73	3.12	332.2	1.22	24.98
23	4.56	106.40	517.8	1.89	12.69	4.17	12.84	921.5	2.06	9.29
24	1.32	35.99	328.1	2.11	22.83	1.35	3.49	653.6	2.78	13.38
25	.48	1.57	270.2	.76	32.37	2.56	2.27	391.2	1.65	22.03
26	1.03	2.79	346.3	1.29	25.07	2.30	2.82	409.4	2.20	21.07
27	2.64	84.76	401.9	2.71	16.33	1.56	5.00	719.3	3.77	12.12
28	2.30	3.54	270.2	.65	31.36	5.03	3.25	376.2	1.26	22.34
29	3.93	104.87	389.4	1.16	15.66	3.22	5.59	725.5	1.20	11.92
30	1.42	55.21	327.3	1.65	21.20	1.43	4.12	597.7	3.32	14.58
31	.38	2.42	295.6	.99	29.53	1.77	3.09	472.7	1.78	18.37
32	.96	4.33	317.0	1.41	27.15	4.25	3.15	385.2	1.38	21.99
BAG (CALC.)	2.27	39.93	334.7	2.04	21.93	3.04	4.36	539.0	2.78	15.98
BAG (ACT.)	2.35	40.29	344.8	1.85	21.36	3.26	3.96	521.8	2.78	16.48
33	.93	19.42	43.4	.02	115.48	.69	1.95	69.1	.07	119.30
34	8.39	209.28	543.5	.26	9.87	9.70	30.37	875.7	.52	9.30
35	6.94	31.81	507.6	.52	15.31	10.05	12.54	597.8	.65	13.67
36	2.70	37.21	286.3	.26	25.12	3.81	8.91	383.7	.43	21.66
37	.29	.69	233.4	.79	37.71	1.34	2.53	322.3	1.43	26.85
38	.07	.02	273.6	.73	32.41	3.72	3.19	380.8	.75	22.32
39	.06	.05	323.4	2.09	27.42	.87	2.36	431.1	2.06	20.28

EMISSION RESULTS IN GRAMS PER MILE (PER MINUTE FOR IDLE)
FUEL ECONOMY IN MILES PER GALLON (PER MINUTE FOR IDLE)

APPENDIX H

LISTING OF MODAL RESULTS ON INDIVIDUAL VEHICLES

ST. LOUIS

	VEH	YEAR	MAKE	MODL	CID	VEH	YEAR	MAKE	MODL	CID
	6044	1976	PONT	LEMA	350	6045	1976	PONT	GRNP	400
MODE NO.	HC	CO	CO2	NOXC	FUEL ECONOMY	HC	CO	CO2	NOXC	FUEL ECONOMY
1	.21	3.71	1132.3	8.73	7.79	3.97	136.23	1453.2	3.95	5.28
2	.05	2.01	330.8	.68	26.57	2.02	13.93	402.0	.58	20.63
3	.13	1.53	1079.6	5.89	8.20	5.60	55.51	1682.8	3.18	4.96
4	.21	3.85	826.5	4.42	10.65	2.29	18.74	910.7	3.45	9.37
5	.11	1.22	732.1	7.83	12.09	.90	5.81	799.2	3.20	10.94
6	.05	.73	232.6	.95	37.95	1.98	4.23	298.6	.90	28.49
7	1.73	40.02	890.5	13.47	9.26	2.92	226.54	895.9	3.26	7.04
8	.04	.55	339.2	1.63	26.09	1.30	5.30	315.5	1.44	27.06
9	.14	1.47	680.1	10.99	13.00	.93	23.43	830.2	4.15	10.20
10	.03	.81	267.3	.87	33.04	2.06	4.65	275.5	.88	30.67
11	.30	7.07	947.2	14.55	9.25	1.65	65.12	1046.5	5.87	7.69
12	.05	.78	343.1	1.27	25.77	3.10	7.83	356.0	.97	23.47
13	.32	9.84	930.9	13.72	9.37	1.33	26.81	1054.4	6.44	8.06
14	.03	.64	308.9	1.50	28.63	1.87	5.78	329.6	1.08	25.75
15	.03	1.16	327.4	.78	26.95	1.38	13.83	382.6	.53	21.72
16	.05	7.58	516.6	.87	16.79	4.92	52.88	773.5	0.00	10.18
17	.15	4.68	1017.7	8.51	8.65	1.69	28.93	1097.0	4.48	7.73
18	.01	1.16	355.8	.65	24.81	2.52	12.09	355.4	1.05	23.21
19	.16	4.15	830.8	9.13	10.59	1.73	24.77	944.1	4.17	8.98
20	.06	1.06	353.4	1.42	24.98	3.48	12.88	381.6	1.28	21.50
21	1.48	52.75	914.0	13.95	8.86	2.96	174.46	1091.3	4.41	6.46
22	.05	.39	339.2	1.41	26.11	2.60	9.38	412.6	1.17	20.38
23	.17	6.02	818.4	8.01	10.71	2.77	35.44	1072.5	4.49	7.81
24	.26	4.04	687.3	9.27	12.78	.90	11.79	639.3	3.49	13.43
25	.05	.06	423.1	1.92	20.96	1.38	5.72	435.2	1.48	19.79
26	.14	.36	546.3	1.14	16.22	1.75	18.01	511.7	1.37	16.27
27	.09	.21	792.5	10.87	11.19	.93	10.98	888.2	4.91	9.77
28	.04	0.00	393.4	1.57	22.55	2.33	8.42	442.7	1.17	19.16
29	.25	5.22	745.6	3.97	11.76	2.74	36.06	846.2	3.09	9.74
30	.82	11.16	575.0	8.35	14.91	1.53	56.81	714.0	3.69	10.98
31	.05	0.00	480.5	2.60	18.46	1.75	10.90	472.7	1.79	17.92
32	.07	.27	490.6	1.31	18.07	2.58	28.06	492.0	1.25	16.31
BAG (CALC.)	.20	5.65	584.1	5.22	14.95	1.72	26.88	631.9	2.83	13.06
BAG (ACT.)	.19	4.93	542.9	5.46	16.10	1.72	26.64	611.5	2.79	13.47
33	.00	0.00	61.3	.08	144.89	.61	4.72	94.5	.04	85.45
34	.16	0.00	782.3	.70	11.34	8.36	40.79	1136.4	.27	7.23
35	1.20	1.31	447.1	.34	19.59	4.31	30.92	691.9	.27	11.77
36	.92	1.60	451.5	.62	19.42	2.65	17.46	477.6	.18	17.29
37	.21	.15	344.5	1.11	25.70	.81	2.33	390.0	.63	22.40
38	.07	0.00	395.3	2.71	22.44	.43	.99	449.4	1.18	19.62
39	.05	0.00	497.4	3.37	17.84	.41	2.29	519.2	2.51	16.93

EMISSION RESULTS IN GRAMS PER MILE (PER MINUTE FOR IDLE)
FUEL ECONOMY IN MILES PER GALLON (PER MINUTE FOR IDLE)

APPENDIX H

LISTING OF MODAL RESULTS ON INDIVIDUAL VEHICLES

ST. LOUIS

	VEH	YEAR	MAKE	MODL	CID	VEH	YEAR	MAKE	MODL	CID
	6046	1976	DATS	B210	85	6047	1976	DATS	B210	85
MODE NO.	HC	CO	CO2	NOXC	FUEL ECONOMY	HC	CO	CO2	NOXC	FUEL ECONOMY
1	1.52	25.43	419.0	1.51	19.14	2.51	24.73	571.5	4.65	14.35
2	.98	6.28	316.3	1.18	26.96	.66	3.15	163.3	1.30	52.10
3	1.20	25.39	507.0	.24	16.12	2.68	25.36	514.2	1.83	15.78
4	.63	9.04	283.2	.80	29.64	1.31	7.33	432.5	3.20	19.80
5	.77	3.30	295.2	2.23	29.31	1.22	6.21	325.2	3.92	26.19
6	.86	2.85	220.0	2.64	39.07	.38	2.61	152.1	1.17	56.39
7	1.31	18.75	245.3	2.53	31.82	2.15	53.56	453.3	5.80	16.31
8	.93	5.13	278.3	4.94	30.68	.52	2.49	165.2	2.59	51.97
9	1.00	4.87	261.8	4.43	32.56	1.01	20.56	339.0	4.53	23.70
10	1.66	2.65	198.6	3.16	42.67	.37	3.38	162.8	1.35	52.42
11	1.94	54.97	322.3	2.36	21.40	1.71	48.91	431.1	5.48	17.29
12	2.16	4.86	244.0	4.03	34.33	.33	3.34	177.7	1.69	48.23
13	2.18	50.78	341.6	2.64	20.72	1.51	37.27	438.3	5.90	17.69
14	.99	3.57	227.5	4.10	37.57	.29	2.20	150.0	1.93	57.48
15	1.62	9.98	232.7	1.23	35.01	.59	0.00	161.6	1.10	54.29
16	.70	36.21	515.5	.84	15.44	.96	12.94	320.6	.33	25.80
17	1.68	22.77	346.5	2.88	22.90	1.77	28.68	457.1	4.60	17.48
18	.96	5.50	223.3	2.79	37.78	.52	1.84	141.2	1.34	60.88
19	.98	11.89	281.3	1.68	29.28	1.28	12.85	430.5	3.79	19.52
20	1.43	5.00	269.1	3.27	31.53	.51	3.58	179.0	1.49	47.65
21	2.11	40.51	309.1	2.43	23.39	2.86	70.69	510.7	5.99	14.07
22	1.92	7.42	237.0	4.25	34.85	.44	6.58	177.5	2.22	46.89
23	.90	15.24	350.0	1.11	23.55	1.77	33.86	346.4	1.80	21.90
24	.75	8.52	266.7	2.06	31.42	.85	12.38	301.6	3.64	27.42
25	.89	4.57	262.0	5.50	32.63	.39	3.70	192.1	2.88	44.58
26	1.65	17.46	265.4	1.50	29.77	.94	9.36	298.1	1.35	28.11
27	1.32	22.80	329.0	3.02	24.05	1.19	16.40	403.1	5.36	20.51
28	1.86	5.24	236.9	4.29	35.35	.42	6.77	194.2	2.18	43.04
29	.96	12.14	304.1	1.17	27.21	1.67	15.34	416.1	1.94	19.92
30	.65	7.23	247.0	1.62	34.08	1.39	33.92	328.5	3.68	22.98
31	1.05	6.28	302.4	6.23	28.12	.53	3.27	194.6	3.27	44.06
32	2.07	17.73	300.8	1.27	26.48	1.09	10.36	276.8	1.71	29.93
BAG (CALC.)	1.54	18.36	284.6	3.30	27.88	.93	13.90	285.0	3.27	28.65
BAG (ACT.)	1.53	16.65	270.9	3.33	29.40	.91	13.57	288.3	3.39	28.40
33	.10	2.80	36.5	.02	215.15	.21	1.90	32.1	.02	247.97
34	.88	36.99	578.6	.21	13.88	2.07	17.57	431.5	.24	19.06
35	.59	20.50	462.3	.43	17.88	1.25	15.95	260.9	.25	30.61
36	.53	14.73	300.2	.29	27.30	.93	5.94	211.7	.41	39.62
37	.61	2.90	226.7	1.04	38.07	.77	1.27	200.0	1.25	43.42
38	.85	1.34	216.6	2.67	40.08	.66	2.01	209.2	1.76	41.38
39	.85	1.70	238.7	5.01	36.36	.56	3.01	236.2	.33	36.57

EMISSION RESULTS IN GRAMS PER MILE (PER MINUTE FOR IDLE)
FUEL ECONOMY IN MILES PER GALLON (PER MINUTE FOR IDLE)

APPENDIX H

LISTING OF MODAL RESULTS ON INDIVIDUAL VEHICLES

ST. LOUIS

	VEH	YEAR	MAKE	MODL	CID	VEH	YEAR	MAKE	MODL	CID
	6048	1976	TOYO	CORO	97	6049	1976	TOYO	CELI	133
MODE NO.	HC	CO	CO2	NOXC	FUEL ECONOMY	HC	CO	CO2	NOXC	FUEL ECONOMY
1	2.24	27.07	703.8	6.27	11.78	.92	20.85	599.4	2.72	13.98
2	.59	10.24	267.9	1.05	31.05	.39	8.42	505.7	.62	17.06
3	2.36	40.23	721.7	1.64	11.20	.76	32.60	881.8	.14	9.49
4	1.50	14.70	461.5	3.33	18.14	.13	7.78	523.4	1.01	16.56
5	1.24	6.17	410.4	5.48	20.93	.17	5.04	508.2	2.75	17.18
6	.41	3.61	204.7	1.77	41.94	.10	7.66	296.5	2.01	28.74
7	1.11	35.84	562.5	6.10	14.26	1.89	75.33	435.6	3.61	15.85
8	.44	4.90	280.2	4.51	30.68	.07	5.42	274.4	4.19	31.34
9	.87	6.33	451.1	7.09	19.14	.42	5.19	360.0	6.79	24.02
10	.31	3.88	221.0	2.97	38.91	.07	4.64	279.2	2.30	30.96
11	.68	29.67	596.0	5.78	13.77	1.28	38.23	511.8	6.19	15.41
12	.41	4.27	237.0	3.91	36.23	.12	5.15	303.2	3.14	28.48
13	.53	17.85	528.4	6.15	15.90	.75	20.57	535.0	5.66	15.58
14	.36	3.80	261.4	4.17	33.05	.08	3.67	260.1	3.17	33.35
15	.33	5.71	257.1	.93	33.23	.08	5.22	413.2	.61	21.05
16	.37	15.21	382.5	.52	21.78	2.03	10.14	1009.8	.66	8.60
17	.94	19.20	513.2	5.86	16.25	.58	14.54	562.1	3.91	15.13
18	.47	3.57	234.0	2.41	36.82	.12	10.62	407.4	1.82	20.91
19	.91	16.11	427.1	4.15	19.49	.13	4.10	484.6	2.88	18.06
20	.46	3.94	310.5	2.57	27.90	.12	10.88	382.8	2.15	22.18
21	.57	28.24	623.2	5.86	13.26	3.51	141.58	444.8	1.96	13.08
22	.36	5.38	256.9	3.90	33.30	.14	4.81	353.2	3.13	24.57
23	.96	17.94	530.8	3.81	15.79	.53	9.00	624.8	1.97	13.86
24	.82	7.45	304.4	5.50	27.84	.13	4.14	414.0	3.75	21.09
25	.61	4.63	298.1	5.91	28.88	.11	5.27	328.0	4.30	26.37
26	.50	10.95	408.3	1.69	20.78	.07	15.15	506.1	1.05	16.74
27	.65	11.44	458.2	5.93	18.56	.31	5.22	476.9	6.06	18.26
28	.49	4.80	283.9	4.62	30.29	.13	5.79	353.2	3.28	24.47
29	.88	12.30	413.6	2.36	20.37	.43	9.92	527.2	1.02	16.31
30	.65	9.52	344.4	4.45	24.56	.41	14.63	424.5	2.53	19.78
31	.65	5.19	309.4	6.54	27.77	.09	7.00	381.2	6.07	22.61
32	.47	8.90	426.0	.99	20.10	.11	9.88	493.4	1.03	17.43
BAG (CALC.)	.59	10.27	369.8	4.68	22.88	.45	14.09	405.5	4.37	20.68
BAG (ACT.)	.65	10.75	356.1	4.88	23.66	.47	14.85	388.5	4.53	21.47
33	.09	2.53	38.1	.02	209.34	.08	3.06	49.5	.02	162.77
34	1.30	46.27	504.8	.26	15.26	1.16	47.65	664.4	.27	11.95
35	.76	28.95	310.1	.13	24.79	.22	14.67	744.7	.52	11.55
36	.84	28.88	237.3	.17	31.10	.12	9.53	511.6	.35	16.84
37	.89	8.90	221.7	1.28	37.21	.05	7.48	368.0	.58	23.36
38	.95	4.00	256.7	3.74	33.37	.24	12.69	268.6	2.88	30.68
39	.95	4.26	305.0	7.70	28.21	.19	5.55	321.0	6.08	26.87

EMISSION RESULTS IN GRAMS PER MILE (PER MINUTE FOR IDLE)
FUEL ECONOMY IN MILES PER GALLON (PER MINUTE FOR IDLE)

APPENDIX H

LISTING OF MODAL RESULTS ON INDIVIDUAL VEHICLES

ST. LOUIS

	VEH	YEAR	MAKE	MODL	CID	VEH	YEAR	MAKE	MODL	CID
	6050	1976	VOLK	SEDA	97	6051	1976	VOLK	RABB	97
MODE NO.	HC	CO	CO2	NOXC	FUEL ECONOMY	HC	CO	CO2	NOXC	FUEL ECONOMY
1	6.07	169.22	388.9	.60	13.17	2.05	14.15	470.0	4.51	17.80
2	1.26	52.79	241.5	.36	27.02	1.94	7.19	319.0	1.22	26.38
3	6.44	134.95	661.4	.27	9.93	1.93	20.16	475.5	2.25	17.29
4	2.45	90.29	284.3	.47	20.45	1.11	8.25	333.5	2.60	25.36
5	2.70	95.22	250.6	.58	21.71	.98	6.79	345.5	4.27	24.70
6	1.04	45.35	142.2	.25	40.95	1.27	5.40	172.6	1.67	47.95
7	3.66	152.46	254.0	.55	17.57	1.21	9.67	353.3	6.34	23.84
8	1.51	57.34	147.6	.44	36.60	2.22	10.24	173.7	3.21	45.09
9	2.49	100.74	245.4	.57	21.56	.88	4.88	292.9	5.57	29.25
10	1.21	45.73	136.7	.33	41.78	2.88	9.12	162.5	2.05	47.73
11	4.03	170.77	281.2	.61	15.78	1.16	7.72	357.0	6.99	23.80
12	1.44	51.61	149.7	.39	37.70	2.96	12.50	177.4	2.77	43.00
13	3.92	158.61	281.2	.65	16.35	1.20	10.67	364.3	6.43	23.06
14	1.51	58.27	152.3	.41	35.70	2.42	11.17	188.4	3.12	41.55
15	1.30	37.69	134.2	.26	44.94	1.02	7.19	151.5	1.19	53.46
16	2.51	108.47	428.6	.46	14.62	1.38	19.83	697.8	.92	12.10
17	4.13	133.38	280.0	.63	17.65	1.64	29.08	381.4	4.50	20.53
18	1.41	44.82	161.7	.31	37.52	1.74	6.12	224.0	1.91	37.11
19	2.76	110.02	267.5	.55	19.76	1.26	8.25	337.0	3.57	25.08
20	1.52	52.56	195.6	.29	31.36	1.82	5.46	261.1	2.43	32.22
21	4.78	178.11	268.3	.57	15.75	2.29	21.81	364.3	6.09	21.87
22	1.71	61.02	180.1	.39	31.54	2.87	12.30	210.6	2.87	37.14
23	3.78	110.52	318.9	.41	17.59	1.75	15.18	415.9	3.25	19.93
24	2.43	95.86	229.6	.56	22.88	1.11	7.96	268.3	4.49	31.21
25	1.92	75.40	177.9	.48	29.34	2.16	12.46	225.2	4.01	35.27
26	1.97	65.78	280.7	.45	22.74	1.61	12.58	389.4	1.88	21.42
27	3.31	125.54	248.6	.51	19.45	1.14	7.02	333.7	5.34	25.48
28	1.99	73.00	190.3	.39	28.51	2.63	12.93	227.2	3.15	34.68
29	3.21	87.36	285.8	.48	20.49	1.39	8.15	344.9	2.64	24.51
30	2.64	97.23	214.5	.54	23.63	.91	6.75	289.5	4.04	29.29
31	2.26	82.05	187.7	.54	27.41	1.74	12.44	262.2	4.84	30.90
32	1.74	54.58	217.6	.44	28.73	1.04	8.59	283.0	1.46	29.60
BAG (CALC.)	2.53	95.00	223.8	.47	23.29	1.55	9.15	284.3	4.23	29.23
BAG (ACT.)	2.78	92.34	216.9	.47	23.93	1.57	9.73	270.8	4.20	30.50
33	.45	6.72	34.4	.02	191.32	.04	1.57	51.2	.02	165.03
34	5.26	126.90	573.4	.47	11.24	3.38	53.80	730.5	1.49	10.75
35	3.50	94.24	447.4	.47	14.63	1.36	13.22	467.4	.87	18.02
36	1.95	55.43	268.3	.24	24.54	1.22	11.10	312.2	1.07	26.61
37	1.66	42.87	187.8	.47	34.08	.55	5.84	232.3	1.23	36.49
38	1.64	48.96	168.2	.34	35.45	.66	4.11	205.0	2.28	41.56
39	2.34	83.21	185.5	.61	27.42	1.19	12.05	227.1	4.60	35.53

EMISSION RESULTS IN GRAMS PER MILE (PER MINUTE FOR IDLE)
FUEL ECONOMY IN MILES PER GALLON (PER MINUTE FOR IDLE)

APPENDIX H

LISTING OF MODAL RESULTS ON INDIVIDUAL VEHICLES

ST. LOUIS

	VEH	YEAR	MAKE	MODL	CID	VEH	YEAR	MAKE	MODL	CID
	5052	1975	AMC	GREM	258	5053	1975	BUIC	STAW	350
MODE NO.	HC	CO	CO2	NOxC	FUEL ECONOMY	HC	CO	CO2	NOXC	FUEL ECONOMY
1	2.48	42.87	935.8	3.32	8.78	.30	7.78	1369.0	6.54	6.42
2	.87	13.49	375.8	1.67	22.20	.15	1.76	478.0	.98	18.44
3	4.03	82.02	1006.4	1.94	7.73	.49	12.62	1459.2	2.86	5.99
4	1.36	22.35	558.4	1.52	14.85	.17	.88	968.5	3.65	9.15
5	.70	6.18	564.8	2.99	15.39	.14	1.42	833.2	4.79	10.62
6	.21	4.14	214.4	.85	40.06	.22	.55	340.7	.72	25.93
7	.99	21.88	668.2	7.60	12.58	2.35	148.71	951.3	6.34	7.44
8	.41	3.16	291.5	2.05	29.80	.16	1.23	441.0	2.50	20.01
9	.33	3.12	580.3	3.29	15.14	.10	.58	814.4	5.88	10.88
10	.52	9.72	251.6	1.01	33.06	.16	.30	359.0	1.34	24.66
11	.95	12.44	699.4	9.57	12.29	.88	47.23	1018.7	9.05	8.10
12	.96	12.25	276.1	1.43	29.75	.17	.65	351.5	1.68	25.14
13	.85	11.31	697.5	8.63	12.36	.18	5.72	1052.4	8.48	8.36
14	.51	5.89	307.7	1.47	27.86	.10	.66	385.6	1.82	22.94
15	.44	5.83	311.3	2.27	27.58	.09	1.69	436.4	1.41	20.20
16	2.92	74.30	607.6	0.00	12.10	.41	5.40	1054.2	.71	8.34
17	1.30	14.41	702.1	5.13	12.18	.17	4.15	978.7	7.02	9.00
18	.54	10.99	298.1	1.40	27.99	.15	1.63	440.3	.87	20.02
19	1.23	13.10	607.1	3.40	14.05	.11	3.34	828.5	6.12	10.64
20	.71	14.11	363.6	1.84	22.88	.21	3.16	457.2	.94	19.18
21	1.44	29.30	736.0	9.64	11.28	1.17	88.07	1014.7	8.02	7.67
22	.97	12.62	310.6	1.43	26.61	.19	2.13	484.4	2.00	18.17
23	1.90	30.64	788.5	2.73	10.53	.26	8.11	961.2	4.60	9.11
24	.58	5.37	523.7	4.38	16.62	.12	1.98	671.6	5.41	13.15
25	.56	4.12	347.7	1.73	24.93	.15	.97	480.6	2.70	18.39
26	.63	10.23	488.0	2.38	17.54	.32	1.79	699.3	1.87	12.62
27	.78	9.26	594.3	6.16	14.52	.16	2.55	845.0	6.57	10.45
28	.53	10.87	355.9	1.47	23.69	.19	1.71	515.9	2.32	17.09
29	1.56	28.04	653.7	2.56	12.63	.29	8.52	758.3	3.22	11.49
30	.76	7.91	511.9	4.43	16.85	.29	7.06	635.0	5.39	13.72
31	.50	4.12	365.0	2.10	23.79	.24	.98	535.4	3.23	16.51
32	.75	12.21	432.6	2.05	19.54	.38	2.70	587.6	1.58	14.97
BAG (CALC.)	.71	10.99	480.7	3.89	17.74	.27	10.10	657.8	4.10	13.16
BAG (ACT.)	.75	11.98	466.6	3.89	18.20	.28	9.50	664.9	4.14	13.04
33	.43	8.73	79.2	.14	94.17	.04	0.00	103.3	.07	85.79
34	5.08	105.40	997.8	1.43	7.52	2.04	3.49	1287.6	.79	6.83
35	1.01	7.36	686.9	1.27	12.65	1.58	4.53	666.6	.41	13.08
36	1.22	12.63	371.7	.76	22.45	.96	2.72	492.8	.44	17.75
37	.22	1.45	343.7	1.35	25.60	.32	1.34	412.2	1.10	21.37
38	.15	1.80	390.9	.80	22.51	.15	.17	493.6	1.20	17.95
39	.09	1.26	431.1	1.94	20.48	.11	.21	555.6	4.63	15.95

EMISSION RESULTS IN GRAMS PER MILE (PER MINUTE FOR IDLE)
FUEL ECONOMY IN MILES PER GALLON (PER MINUTE FOR IDLE)

APPENDIX H

LISTING OF MODAL RESULTS ON INDIVIDUAL VEHICLES

ST. LOUIS

	VEH	YEAR	MAKE	MODL	CID	VEH	YEAR	MAKE	MODL	CID
	5054	1975	BUIC	ELEC	455	5055	1975	CADI	DEVI	500
MODE NO.	HC	CO	CO2	NOXC	FUEL ECONOMY	HC	CO	CO2	NOXC	FUEL ECONOMY
1	1.86	27.47	1590.1	4.61	5.41	.46	6.20	1624.1	5.86	5.43
2	.83	13.01	512.7	.08	16.56	.24	2.92	392.5	1.03	22.31
3	3.96	55.45	1839.7	1.49	4.58	.29	1.52	1733.7	4.96	5.11
4	.86	18.65	1086.6	2.45	7.93	.33	1.22	1041.4	3.94	8.50
5	.22	.85	807.8	3.82	10.96	.22	.35	976.5	3.24	9.08
6	.63	3.37	338.5	.35	25.66	.31	1.04	281.7	.45	31.21
7	2.37	165.33	1117.9	3.78	6.41	1.92	132.14	1197.4	4.04	6.29
8	.53	1.84	429.4	1.23	20.45	.24	.50	221.3	.66	39.82
9	.09	.57	947.8	6.44	9.35	.72	17.60	910.5	3.01	9.44
10	1.08	4.35	369.5	.66	23.37	.36	.71	318.3	.48	27.69
11	.54	18.59	1225.6	7.36	7.06	1.32	69.67	1213.5	4.75	6.69
12	1.17	7.12	407.7	1.11	21.00	.78	2.16	246.8	.60	35.12
13	.45	10.81	1192.3	7.28	7.33	1.22	45.39	1341.0	5.68	6.27
14	.86	3.73	440.1	1.23	19.78	.32	.09	284.1	.57	31.12
15	1.32	23.11	438.1	1.33	18.54	.39	.31	355.6	.88	24.84
16	2.73	105.64	718.1	.52	9.94	0.00	0.00	1057.9	1.37	8.39
17	1.03	29.45	1112.6	5.55	7.64	.55	11.43	1336.5	4.49	6.54
18	1.17	15.66	458.5	.30	18.23	.25	.19	320.6	.55	27.59
19	1.06	29.89	977.1	3.25	8.64	.48	7.79	1266.2	4.62	6.93
20	1.88	19.91	456.8	.43	17.97	.66	1.36	333.3	.39	26.29
21	1.55	67.60	1279.4	5.87	6.38	2.17	130.47	1488.1	5.23	5.22
22	1.31	8.31	474.5	1.19	18.05	.70	2.24	426.4	.47	20.54
23	2.11	66.68	979.6	3.04	8.13	.97	16.48	1511.6	5.62	5.76
24	.60	13.97	785.3	4.32	10.97	.82	24.19	857.5	3.62	9.88
25	.67	5.50	537.9	1.11	16.18	.37	1.81	257.9	.59	33.88
26	2.47	60.80	513.7	1.43	14.38	2.20	26.42	409.5	1.61	19.38
27	.82	22.04	939.2	4.70	9.09	.97	21.08	1063.4	4.34	8.07
28	1.36	14.40	524.9	.87	16.08	.80	1.80	333.1	.44	26.22
29	3.29	104.35	888.1	1.82	8.35	1.81	29.38	1203.3	4.10	7.07
30	1.37	47.82	749.6	3.23	10.70	1.07	27.41	1035.7	3.67	8.20
31	.52	5.19	554.9	.78	15.72	.50	3.50	225.1	.78	38.23
32	2.13	67.74	612.1	.74	12.24	2.30	28.43	447.4	1.11	17.77
BAG (CALC.)	.91	22.05	719.2	2.65	11.73	.72	17.28	708.6	2.33	12.03
BAG (ACT.)	.97	22.63	719.2	2.77	11.71	.66	15.85	668.1	2.27	12.77
33	.26	2.62	114.4	.05	74.34	.46	2.88	102.3	.09	81.95
34	1.82	8.84	1416.6	.55	6.18	2.43	1.30	1318.8	.65	6.68
35	1.37	7.51	729.2	.27	11.91	1.11	1.30	669.3	.43	13.15
36	1.64	34.17	669.6	.46	12.18	.74	1.30	582.6	.79	15.12
37	.59	9.78	512.5	.27	16.75	.24	.02	498.1	.89	17.79
38	.07	.61	541.7	.49	16.35	.24	3.76	552.8	.69	15.86
39	.04	.11	626.8	2.92	14.15	.80	15.56	584.8	1.73	14.51

EMISSION RESULTS IN GRAMS PER MILE (PER MINUTE FOR IDLE)
FUEL ECONOMY IN MILES PER GALLON (PER MINUTE FOR IDLE)

APPENDIX H

LISTING OF MODAL RESULTS ON INDIVIDUAL VEHICLES

ST. LOUIS

	VEH	YEAR	MAKE	MODL	CID	VEH	YEAR	MAKE	MODL	CID
	5056	1975	CHEV	MON7	140	5057	1975	CHEV	MONT	350
MODE NO.	HC	CO	CO2	NOXC	FUEL ECONOMY	HC	CO	CO2	NOXC	FUEL ECONOMY
1	1.15	30.25	618.9	3.35	13.25	.77	14.69	1374.4	9.75	6.34
2	.13	.61	331.7	2.78	26.64	.63	16.36	446.7	1.00	18.71
3	.45	13.08	700.7	1.58	12.28	1.65	58.66	1450.8	3.22	5.73
4	.90	32.70	464.5	2.27	17.11	.58	14.16	794.1	2.46	10.85
5	.17	7.54	357.9	2.84	23.97	.61	11.98	671.6	4.86	12.82
6	.02	.63	184.8	1.78	47.76	.28	3.19	289.0	.69	30.10
7	.10	3.19	357.2	3.76	24.49	1.04	27.09	941.9	8.96	8.99
8	.11	2.24	210.4	3.16	41.42	.22	3.95	319.2	2.56	27.22
9	.06	1.10	364.0	4.32	24.25	.18	1.62	791.9	7.94	11.16
10	.05	.56	211.0	2.62	41.86	.19	1.60	277.9	1.48	31.58
11	.34	8.27	482.9	6.24	17.86	.41	8.77	939.1	12.10	9.30
12	.08	1.27	228.2	2.35	38.51	.27	3.68	265.6	2.01	32.60
13	.52	13.74	469.9	5.64	18.00	.20	2.52	894.2	10.86	9.87
14	.05	1.54	236.0	2.51	37.20	.18	1.55	330.4	2.37	26.62
15	.00	.54	303.5	1.33	29.17	.71	22.55	337.0	1.02	23.69
16	0.00	3.47	444.1	1.98	19.74	.29	5.78	911.1	1.42	9.64
17	1.16	31.26	520.5	4.54	15.48	.32	4.33	923.9	8.62	9.53
18	.05	1.03	242.8	1.14	36.29	.22	3.88	351.0	.71	24.81
19	.51	16.99	377.1	3.27	21.89	.30	5.72	792.9	5.90	11.06
20	.09	3.28	270.5	1.39	32.17	.24	2.97	464.1	.73	18.90
21	.67	18.59	401.0	3.79	20.53	.65	22.06	977.3	11.50	8.75
22	.15	7.59	282.4	2.39	30.11	.23	3.67	370.0	2.13	23.57
23	.92	35.30	521.3	3.63	15.31	.55	15.42	1075.9	6.82	8.05
24	.15	9.08	357.4	3.29	23.85	.37	8.25	681.0	6.60	12.77
25	.06	1.95	248.8	3.72	35.22	.19	2.94	375.3	3.05	23.32
26	.03	0.00	418.1	1.93	21.23	1.21	35.21	562.2	1.21	14.28
27	.37	10.09	406.5	4.41	20.95	.17	2.33	824.7	9.67	10.71
28	.07	1.90	265.3	3.09	33.05	.24	3.36	376.9	2.13	23.18
29	.39	13.19	455.2	2.55	18.60	.53	14.30	933.9	4.07	9.26
30	.08	5.25	312.9	3.20	27.62	.43	11.88	708.3	7.75	12.19
31	.09	2.87	284.2	3.77	30.71	.16	2.67	418.3	2.79	20.98
32	.09	0.00	379.5	2.39	23.37	.98	26.42	418.3	1.27	19.17
BAG (CALC.)	.22	7.06	348.1	3.62	24.67	.34	7.64	586.8	5.31	14.79
BAG (ACT.)	.22	6.66	348.0	3.62	24.71	.36	8.36	551.5	5.22	15.69
33	.01	0.00	59.3	.04	149.53	.03	0.00	88.8	.14	99.80
34	.22	0.00	828.6	.71	10.70	1.06	.45	1142.4	1.10	7.74
35	.15	0.00	608.4	2.13	14.58	1.27	10.16	713.5	.41	12.10
36	.08	0.00	474.6	1.56	18.69	1.40	16.13	445.1	.37	18.69
37	.06	.12	325.9	1.42	27.20	1.23	28.24	346.2	1.06	22.50
38	.06	0.00	237.2	2.39	37.39	.12	.18	437.9	1.25	20.24
39	.06	0.00	283.2	5.85	31.32	.05	.05	488.1	4.73	18.18

EMISSION RESULTS IN GRAMS PER MILE (PER MINUTE FOR IDLE)
FUEL ECONOMY IN MILES PER GALLON (PER MINUTE FOR IDLE)

APPENDIX H

LISTING OF MODAL RESULTS ON INDIVIDUAL VEHICLES

ST. LOUIS

	VEH	YEAR	MAKE	MODL	CID	VEH	YEAR	MAKE	MODL	CID
	5058	1975	CHEV	MALI	350	5059	1975	CHEV	STAW	400
MODE NO.	HC	CO	CO2	NOXC	FUEL ECONOMY	HC	CO	CO2	NOXC	FUEL ECONOMY
1	14.31	11.63	1356.0	10.32	6.25	.33	1.04	1856.6	12.55	4.77
2	1.38	4.79	460.9	.93	18.77	.32	1.39	482.5	.63	18.27
3	9.68	32.30	1579.5	3.44	5.34	.44	1.07	1690.8	5.68	5.24
4	8.57	14.71	858.5	4.96	9.77	.21	.81	1217.6	5.67	7.28
5	6.36	6.04	742.7	6.15	11.49	.20	.35	923.4	6.17	9.60
6	.67	1.92	274.6	.63	31.73	.24	.20	294.8	1.11	30.00
7	26.39	75.20	912.5	6.78	7.96	1.72	150.78	1254.5	7.78	5.93
8	.57	1.46	293.8	1.34	29.79	.20	.93	367.5	2.27	24.02
9	7.23	.80	712.9	7.90	12.04	.15	.68	970.3	8.34	9.13
10	.47	1.88	285.2	.98	30.64	.19	.38	358.9	1.76	24.65
11	13.18	19.94	1011.9	12.19	8.18	.25	.69	1301.7	12.49	6.81
12	.78	2.81	280.4	1.25	30.89	.24	0.00	304.8	1.49	29.05
13	12.76	29.93	1040.4	11.96	7.87	.18	1.28	1303.8	11.85	6.79
14	.59	.67	322.7	1.57	27.25	.15	.74	386.8	2.22	22.85
15	.65	.56	316.2	.86	27.81	.11	.48	445.1	.40	19.89
16	2.96	9.29	925.3	1.64	9.35	0.00	2.16	1484.3	1.05	5.97
17	8.63	7.40	1059.3	11.62	8.08	.23	1.28	1314.4	9.01	6.74
18	.94	1.72	302.8	.54	28.77	.17	.81	354.5	1.34	24.91
19	8.06	3.29	946.7	9.38	9.08	.25	1.48	1163.9	8.22	7.61
20	1.25	1.48	398.4	.80	21.93	.26	1.41	426.4	1.37	20.67
21	14.95	40.10	951.9	9.68	8.35	1.71	157.16	1281.2	7.61	5.79
22	.80	3.98	329.7	1.21	26.22	.21	1.39	391.4	2.14	22.51
23	6.81	13.08	943.4	7.90	9.01	.33	3.08	1402.5	7.80	6.30
24	6.49	5.72	731.5	9.16	11.66	.16	1.39	938.7	6.55	9.43
25	.59	2.27	343.0	1.73	25.47	.17	1.08	450.8	3.56	19.59
26	.90	8.47	495.7	1.24	17.34	.23	1.55	758.3	1.32	11.66
27	6.41	2.82	866.0	12.22	9.96	.18	1.14	1049.8	9.02	8.44
28	.83	4.40	368.6	1.21	23.47	.20	1.05	498.3	2.66	17.73
29	6.48	14.73	934.9	6.53	9.07	.25	1.93	997.3	5.14	8.87
30	12.28	27.68	741.1	8.74	10.78	.25	1.46	991.5	7.03	8.92
31	.77	3.82	360.5	1.67	24.06	.17	1.17	452.0	3.86	19.54
32	2.05	9.65	527.3	.69	16.17	.20	1.94	587.4	1.28	15.02
BAG (CALC.)	4.38	8.81	603.2	5.36	14.07	.26	8.91	738.6	5.31	11.78
BAG (ACT.)	4.33	9.22	578.1	5.23	14.64	.25	9.36	718.3	5.38	12.10
33	.13	.00	90.0	.14	98.15	.05	0.00	113.7	.17	77.99
34	.60	0.00	1127.6	.85	7.86	.80	0.00	1413.9	1.65	6.27
35	.78	1.34	749.1	.56	11.78	.47	0.00	727.9	.70	12.17
36	.27	.10	476.2	.38	18.60	.19	0.00	554.3	.61	15.99
37	.94	13.56	344.1	.75	24.09	.17	0.00	491.8	.43	18.03
38	.11	.02	403.9	.85	21.95	.06	0.00	503.4	2.23	17.62
39	.05	.01	454.4	2.64	19.52	.07	.05	588.5	5.41	15.07

EMISSION RESULTS IN GRAMS PER MILE (PER MINUTE FOR IDLE)
FUEL ECONOMY IN MILES PER GALLON (PER MINUTE FOR IDLE)

APPENDIX H

LISTING OF MODAL RESULTS ON INDIVIDUAL VEHICLES

ST. LOUIS

	VEH	YEAR	MAKE	MODL	CID	VEH	YEAR	MAKE	MODL	CID
	5060	1975	CHEV	CAMA	250	5061	1975	CHRY	CORD	360
MODE NO.	HC	CO	CO2	NOXC	FUEL ECONOMY	HC	CO	CO2	NOXC	FUEL ECONOMY
1	2.78	41.81	775.0	5.09	10.45	3.01	124.08	1367.5	2.89	5.65
2	.65	2.28	323.4	.57	26.97	1.98	67.01	527.7	1.04	13.88
3	4.15	39.58	1014.7	1.19	8.14	4.00	175.71	972.9	.51	7.03
4	.51	7.17	681.1	2.48	12.79	1.28	45.07	747.8	1.00	10.79
5	.04	.49	469.0	2.41	18.89	.84	11.34	679.6	4.03	12.68
6	.03	1.17	271.4	.41	32.47	.58	13.97	305.3	3.29	26.97
7	.35	12.13	661.1	6.91	13.03	2.29	99.66	923.3	4.75	8.16
8	.05	.61	309.7	1.09	28.56	.74	8.61	370.1	3.01	22.99
9	.03	1.06	506.5	3.59	17.46	.20	1.25	748.9	5.58	11.81
10	.99	3.82	247.0	.71	34.65	.95	28.87	354.5	1.95	22.03
11	1.64	103.39	666.1	5.01	10.64	1.35	63.40	955.7	6.13	8.38
12	1.45	5.17	284.9	.85	29.82	1.34	40.77	356.8	2.77	20.88
13	1.83	61.74	661.9	5.86	11.61	.79	23.01	1067.8	6.21	8.02
14	.23	1.14	320.6	1.17	27.47	.67	17.14	358.5	3.01	22.90
15	.16	1.20	331.8	.72	26.55	1.09	38.26	418.8	1.05	18.40
16	1.35	34.39	766.4	.61	10.76	3.92	162.62	826.1	.60	8.11
17	2.60	42.10	681.6	7.18	11.74	1.68	81.65	881.6	3.94	8.74
18	.45	1.47	329.6	.53	26.62	.75	27.98	345.7	3.40	22.64
19	.87	26.11	525.6	4.30	15.59	.82	28.72	937.1	3.03	9.01
20	1.45	4.87	371.4	.63	23.13	1.14	43.28	442.8	3.66	17.25
21	3.86	180.99	619.1	3.66	9.69	3.14	179.03	1009.5	4.27	6.82
22	1.61	4.45	348.9	1.13	24.59	1.14	34.11	416.3	2.87	18.75
23	3.35	64.27	674.7	4.39	11.29	1.61	60.45	1102.9	1.77	7.38
24	.04	.88	419.3	4.07	21.09	.44	9.68	729.5	3.28	11.90
25	.02	.61	359.3	1.42	24.63	.77	10.90	443.9	3.75	19.15
26	.25	4.29	509.5	.82	17.16	.67	22.78	536.2	1.45	15.46
27	1.48	20.94	589.0	5.63	14.17	.61	21.71	860.9	4.91	9.90
28	1.81	5.33	345.5	1.27	24.68	1.05	31.25	392.9	3.08	19.93
29	2.41	50.20	563.4	3.98	13.66	1.56	69.06	859.2	.91	9.12
30	.08	1.35	393.9	5.17	22.40	.56	22.39	617.5	2.76	13.56
31	.03	.74	430.5	1.97	20.55	1.65	10.75	476.4	3.78	17.80
32	.47	8.48	433.9	.95	19.78	1.19	66.32	681.1	1.13	11.25
BAG (CALC.)	1.12	19.95	466.6	2.82	17.70	.98	35.51	650.9	3.74	12.50
BAG (ACT.)	1.17	18.54	452.9	2.82	18.27	.99	35.77	640.8	3.95	12.68
33	.71	5.30	59.5	.02	126.67	.63	25.51	109.1	.06	58.69
34	5.44	71.58	738.0	.24	10.23	7.54	295.55	1290.1	.70	4.99
35	.95	3.21	712.2	.48	12.32	3.74	143.13	678.7	.35	9.70
36	.11	.15	744.3	.89	11.92	2.47	73.95	581.7	.38	12.58
37	.08	0.00	295.5	.44	30.01	.12	.02	484.1	3.45	18.32
38	.06	0.00	357.9	.55	24.79	.09	0.00	425.5	4.89	20.84
39	.03	.01	394.0	2.20	22.52	.12	.27	519.9	6.07	17.05

EMISSION RESULTS IN GRAMS PER MILE (PER MINUTE FOR IDLE)
FUEL ECONOMY IN MILES PER GALLON (PER MINUTE FOR IDLE)

APPENDIX H

LISTING OF MODAL RESULTS ON INDIVIDUAL VEHICLES

ST. LOUIS

	VEH	YEAR	MAKE	MODL	CID	VEH	YEAR	MAKE	MODL	CID
	5062	1975	DODG	DART	318	5063	1975	FORD	PINT	140
MODE NO.	HC	CO	CO2	NOXC	FUEL ECONOMY	HC	CO	CO2	NOXC	FUEL ECONOMY
1	1.71	33.94	1348.1	3.67	6.31	2.87	32.55	567.1	1.87	14.15
2	.63	18.38	416.3	1.05	19.85	.31	9.10	352.0	.77	24.17
3	3.57	108.75	1182.8	1.25	6.50	2.09	61.44	636.3	.26	12.00
4	.15	1.75	798.7	1.46	11.07	1.07	11.22	463.7	1.36	18.31
5	.10	1.01	697.7	2.63	12.69	1.28	6.74	387.9	2.84	22.05
6	.16	3.62	305.0	.69	28.52	.20	2.71	223.8	.95	38.81
7	.10	.94	936.2	6.61	9.46	.83	24.52	462.2	4.06	17.63
8	.13	1.15	351.3	1.22	25.10	.30	3.81	317.3	2.59	27.37
9	.04	.78	738.3	3.19	12.00	.45	5.56	431.4	3.63	20.10
10	.35	6.07	335.1	.74	25.67	.24	3.43	239.2	1.35	36.17
11	.09	1.53	882.8	6.92	10.02	2.50	33.79	516.8	4.17	15.36
12	.47	9.02	299.4	1.15	28.17	.29	4.94	258.5	1.61	33.22
13	.23	7.62	894.3	5.71	9.79	2.77	29.24	494.0	4.18	16.18
14	.32	1.99	383.5	1.20	22.89	.20	3.83	260.2	1.76	33.26
15	.16	.50	412.6	1.03	21.44	.27	18.42	293.2	.50	27.48
16	1.47	44.83	584.8	.64	13.45	.57	26.80	679.9	.45	12.26
17	.64	15.86	928.8	3.52	9.29	3.11	26.18	475.7	4.32	16.85
18	.31	4.77	439.5	.60	19.81	.22	6.96	286.5	1.22	29.77
19	.35	9.18	863.6	2.29	10.10	1.35	16.47	444.3	3.00	18.71
20	.45	13.13	409.8	.76	20.55	.22	9.21	307.4	1.03	27.52
21	.47	10.57	994.2	7.53	8.77	3.74	35.34	454.7	3.68	17.00
22	.37	5.41	480.4	1.18	18.11	.41	6.55	278.6	1.68	30.59
23	.86	38.45	1080.6	1.42	7.76	2.60	29.48	540.0	1.97	14.93
24	.07	.74	622.6	2.63	14.22	1.02	10.17	384.9	3.24	21.96
25	.28	1.27	486.4	1.64	18.14	.25	4.83	340.9	2.53	25.41
26	.12	4.06	576.5	1.25	15.22	.37	22.09	532.7	.94	15.61
27	.31	7.14	754.8	4.19	11.57	2.09	15.61	439.3	5.17	18.87
28	.40	7.62	403.1	1.11	21.32	.30	6.38	315.9	2.06	27.15
29	1.06	35.32	712.8	.71	11.50	3.08	19.80	448.1	1.38	18.15
30	.06	.45	671.5	2.78	13.20	1.31	15.68	392.5	2.82	21.07
31	.14	1.04	531.9	1.72	16.62	.26	5.52	352.9	3.44	24.49
32	.38	9.15	562.1	1.30	15.36	.34	13.53	386.0	.99	21.73
BAG (CALC.)	.33	7.85	612.4	2.96	14.18	.97	13.24	378.5	3.09	22.06
BAG (ACT.)	.35	7.87	581.8	2.88	14.91	.93	12.87	378.5	3.09	22.09
33	.61	15.84	70.3	.04	91.43	.11	5.24	51.9	.02	146.82
34	6.18	155.97	869.7	.51	7.82	.74	24.84	1245.0	.69	6.90
35	.54	7.21	830.2	.50	10.53	.51	14.49	669.3	.58	12.44
36	.12	0.00	629.5	.59	14.09	.32	9.86	436.4	.31	19.59
37	.06	0.00	421.4	.80	21.05	.28	5.54	299.1	.65	28.75
38	.04	0.00	460.7	.64	19.26	.28	2.25	281.2	.91	31.07
39	.04	.10	496.4	1.28	17.87	.19	2.67	327.3	2.35	26.73

EMISSION RESULTS IN GRAMS PER MILE (PER MINUTE FOR IDLE)
FUEL ECONOMY IN MILES PER GALLON (PER MINUTE FOR IDLE)

APPENDIX H

LISTING OF MODAL RESULTS ON INDIVIDUAL VEHICLES

ST. LOUIS

	VEH	YEAR	MAKE	MODL	CID	VEH	YEAR	MAKE	MODL	CID
	5064	1975	FORD	MAVE	302	5065	1975	FORD	LTD	400
MODE NO.	HC	CO	CO2	NOXC	FUEL ECONOMY	HC	CO	CO2	NOXC	FUEL ECONOMY
1	1.87	37.13	1352.4	4.12	6.26	4.49	94.29	1032.5	4.39	7.43
2	2.74	6.39	456.2	.72	18.69	2.75	48.50	613.7	1.08	12.70
3	3.50	54.62	1159.4	.93	7.06	6.46	223.41	1106.6	2.26	6.00
4	.90	13.41	1018.6	2.29	8.51	2.72	38.99	714.4	3.70	11.32
5	1.24	8.25	761.6	4.26	11.40	1.96	38.35	721.4	2.36	11.26
6	4.84	2.34	287.8	1.39	28.93	1.72	20.24	370.6	1.23	21.76
7	1.78	39.99	943.3	6.31	8.77	2.91	73.52	888.6	5.43	8.76
8	4.25	3.76	351.4	1.89	23.94	1.60	11.10	448.2	1.03	18.85
9	.60	10.07	787.2	3.90	11.03	1.76	42.00	660.0	2.97	12.13
10	5.56	4.37	285.2	1.57	28.66	1.78	15.86	438.9	.98	18.91
11	.89	19.39	1013.5	5.91	8.48	2.42	72.81	877.1	4.65	8.88
12	7.39	5.37	310.1	1.35	25.95	2.26	15.55	487.3	.89	17.10
13	.82	20.77	995.3	5.50	8.61	2.32	64.68	921.2	4.32	8.62
14	3.11	4.03	368.8	1.43	23.05	1.21	19.78	453.6	1.13	18.17
15	1.26	7.06	482.6	.83	17.83	1.63	40.95	436.9	.31	17.53
16	1.69	12.09	962.1	1.23	9.00	6.49	161.01	1008.0	.77	6.93
17	.71	15.72	1036.6	3.66	8.34	2.79	61.72	845.2	3.71	9.33
18	3.81	4.82	382.6	1.34	22.06	1.56	30.01	493.6	1.04	16.26
19	.86	9.50	799.2	3.77	10.87	2.66	59.41	706.9	3.81	10.98
20	6.05	3.90	424.4	1.60	19.73	2.03	37.05	520.0	1.95	15.18
21	1.05	33.57	982.8	6.18	8.54	2.88	94.95	957.9	5.16	7.95
22	5.20	5.84	418.5	1.38	19.98	2.09	25.76	506.9	1.17	16.02
23	.90	22.19	1022.6	2.71	8.37	3.49	58.56	816.3	4.42	9.65
24	.52	6.68	638.2	4.25	13.65	1.78	52.30	745.6	2.72	10.65
25	2.83	3.52	441.4	2.87	19.47	1.66	19.47	493.3	1.22	16.77
26	2.28	7.08	807.3	1.35	10.75	2.56	76.30	604.7	1.20	12.11
27	.54	9.13	840.2	4.36	10.37	2.04	52.04	805.2	3.29	9.93
28	4.48	6.08	438.8	1.88	19.19	1.55	20.66	513.5	1.28	16.11
29	.85	16.97	786.7	1.89	10.88	3.46	82.51	847.0	3.53	8.99
30	.69	11.74	674.9	4.28	12.76	1.98	51.76	765.5	3.72	10.40
31	2.21	5.13	516.5	2.98	16.70	1.29	17.69	499.8	1.24	16.69
32	2.33	8.72	702.8	1.32	12.26	2.76	84.07	659.0	.88	11.10
BAG (CALC.)	2.10	10.06	647.8	3.08	13.24	1.95	43.00	663.0	2.34	12.05
BAG (ACT.)	2.26	9.56	627.1	3.15	13.67	1.95	44.44	646.0	2.12	12.29
33	.38	4.06	73.7	.04	109.19	.71	10.13	140.6	.16	55.90
34	7.21	9.68	1113.2	.71	7.71	8.05	83.44	1778.4	1.64	4.59
35	2.47	3.29	694.2	.47	12.55	3.66	27.59	898.8	.83	9.31
36	.68	3.32	747.6	.63	11.76	2.51	19.78	599.1	.56	13.91
37	.63	2.22	439.6	.69	19.94	.40	1.68	470.7	.75	18.70
38	.87	2.47	408.2	2.99	21.39	.35	3.01	502.5	.87	17.46
39	.55	5.96	472.1	5.65	18.37	.43	9.75	652.6	1.81	13.26

EMISSION RESULTS IN GRAMS PER MILE (PER MINUTE FOR IDLE)
FUEL ECONOMY IN MILES PER GALLON (PER MINUTE FOR IDLE)

APPENDIX H

LISTING OF MODAL RESULTS ON INDIVIDUAL VEHICLES

ST. LOUIS

	VEH	YEAR	MAKE	MODL	CID	VEH	YEAR	MAKE	MODL	CID
	5066	1975	FORD	GRAN	250	5067	1975	FORD	GRAN	302
MODE NO.	HC	CO	CO2	NOXC	FUEL ECONOMY	HC	CO	CO2	NOXC	FUEL ECONOMY
1	.63	3.60	1391.5	8.22	6.34	1.77	2.56	1218.3	6.84	7.23
2	.18	2.96	339.7	1.18	25.73	.34	1.07	458.8	.92	19.23
3	.87	5.71	1330.5	2.79	6.61	1.26	.42	1470.0	4.03	6.02
4	.49	1.72	900.0	3.52	9.82	.88	.55	790.4	4.54	11.18
5	.33	1.13	720.5	4.58	12.27	.90	.99	609.2	5.19	14.46
6	.12	.96	210.9	1.25	41.70	.41	.16	225.8	1.52	39.03
7	.82	20.77	953.1	11.41	8.98	1.28	11.45	780.9	6.86	11.05
8	.17	.83	247.5	1.82	35.59	.65	.28	256.0	2.47	34.33
9	.18	.71	752.3	5.95	11.77	.82	.73	624.8	5.80	14.12
10	.10	1.22	221.9	1.25	39.59	.58	.19	256.3	1.40	34.34
11	.21	1.19	970.0	11.46	9.13	1.11	2.30	804.7	9.10	10.93
12	.13	1.48	240.7	1.62	36.45	.61	.35	274.9	1.84	32.00
13	.20	1.65	959.1	9.32	9.22	1.04	1.38	852.3	8.43	10.35
14	.11	1.01	259.3	1.82	33.97	.61	.35	286.2	2.13	30.74
15	.11	3.55	295.5	1.75	29.44	.37	.19	279.5	1.02	31.59
16	.39	7.11	621.5	.54	14.00	.73	.29	756.0	1.06	11.70
17	.29	2.60	996.0	6.18	8.87	1.29	2.93	858.4	6.74	10.24
18	.08	1.34	229.8	1.43	38.23	.35	.31	263.0	2.03	33.54
19	.33	1.98	887.9	5.04	9.95	1.08	1.30	793.1	5.47	11.11
20	.11	2.09	296.1	1.47	29.61	.48	.39	276.3	1.67	31.88
21	.39	12.27	1099.0	11.84	7.93	1.24	6.41	886.6	8.53	9.85
22	.14	1.10	282.2	1.82	31.21	.80	.57	312.7	2.22	28.07
23	.41	2.54	1080.6	4.04	8.17	1.21	1.31	1017.7	6.25	8.67
24	.19	1.11	682.3	5.65	12.96	.88	1.69	597.0	5.37	14.73
25	.11	.95	309.7	2.17	28.49	.64	.65	316.3	2.91	27.79
26	.12	.84	487.2	2.02	18.15	.43	.42	449.1	1.47	19.67
27	.20	.85	810.7	6.46	10.92	.98	2.34	700.1	6.44	12.56
28	.16	.97	337.9	2.15	26.11	.64	.55	343.9	2.40	25.59
29	.36	1.69	925.5	3.08	9.55	.94	.76	810.1	3.85	10.90
30	.18	.96	725.5	6.29	12.20	.87	2.49	647.0	4.88	13.58
31	.15	.87	341.6	2.64	25.84	.97	.83	310.5	3.33	28.19
32	.23	1.92	388.7	1.54	22.62	.53	.73	516.9	1.51	17.08
BAG (CALC.)	.19	2.10	564.6	4.19	15.61	.73	1.49	527.9	4.33	16.67
BAG (ACT.)	.20	1.86	536.4	4.27	16.44	.77	1.49	520.8	4.47	16.89
33	.05	.01	84.7	.07	104.55	.17	1.37	112.1	.10	77.33
34	.75	.15	995.0	.83	8.90	2.02	7.48	1368.2	.96	6.40
35	.41	.07	520.3	.42	17.01	.97	.60	707.1	.59	12.48
36	.23	0.00	394.2	.56	22.48	.52	.25	525.8	.48	16.81
37	.18	0.00	342.9	2.43	25.84	.52	.22	391.9	.76	22.53
38	.19	.03	375.2	1.95	23.61	.48	.26	373.5	2.53	23.64
39	.16	.15	442.6	3.99	20.02	.44	.47	388.3	3.69	22.73

EMISSION RESULTS IN GRAMS PER MILE (PER MINUTE FOR IDLE)
FUEL ECONOMY IN MILES PER GALLON (PER MINUTE FOR IDLE)

APPENDIX H

LISTING OF MODAL RESULTS ON INDIVIDUAL VEHICLES

ST. LOUIS

	VEH	YEAR	MAKE	MODL	CID	VEH	YEAR	MAKE	MODL	CID
	5068	1975	MERC	MONG	351	5069	1975	OLDS	CUTL	350
MODE NO.	HC	CO	CO2	NOxC	FUEL ECONOMY	HC	CO	CO2	NOXC	FUEL ECONOMY
1	1.86	31.52	1421.4	11.29	6.01	5.37	207.34	1427.3	5.62	5.01
2	.61	15.71	600.8	.95	14.15	.11	3.50	446.6	.71	19.62
3	2.49	61.23	1387.5	3.76	5.95	1.37	45.47	1515.7	6.85	5.58
4	.84	12.71	903.0	5.00	9.59	.57	15.68	942.4	3.09	9.16
5	.61	5.87	776.3	5.29	11.27	.49	11.26	734.2	2.80	11.78
6	.31	2.38	402.5	1.37	21.80	.21	1.26	288.9	.45	30.44
7	1.29	11.85	970.0	14.18	8.94	3.85	271.18	808.7	2.94	7.12
8	.48	2.03	474.0	3.68	18.54	.23	.77	312.2	1.05	28.25
9	.36	3.71	832.6	8.97	10.57	.48	17.15	762.6	3.66	11.22
10	.25	3.21	401.7	2.19	21.78	.14	1.00	286.6	.65	30.75
11	.76	8.28	1031.2	14.96	8.48	2.14	117.24	838.7	5.44	8.62
12	.46	3.80	418.6	2.19	20.83	.17	.91	317.9	.86	27.74
13	.75	7.87	1025.3	14.69	8.53	1.41	71.43	916.5	5.91	8.59
14	.24	1.95	469.1	2.36	18.76	.13	.66	332.8	.98	26.55
15	.22	6.68	417.5	1.00	20.70	.10	1.26	301.1	1.20	29.26
16	1.82	48.18	1183.2	1.25	7.02	.24	3.85	774.2	3.05	11.36
17	.98	14.22	1051.8	11.77	8.24	1.40	69.15	969.1	4.95	8.20
18	.26	3.63	558.6	1.43	15.70	.14	1.08	335.8	.76	26.26
19	.99	11.77	934.1	10.09	9.29	2.05	111.97	831.8	3.80	8.75
20	.39	5.20	470.6	1.42	18.49	.18	.49	382.6	.64	23.11
21	1.55	22.32	1141.6	17.57	7.51	2.44	123.74	1027.1	7.31	7.22
22	.34	3.49	499.7	2.40	17.53	.18	.58	342.0	1.13	25.84
23	1.18	22.36	1308.1	9.33	6.59	1.29	64.24	1156.0	4.62	7.04
24	.54	5.47	737.1	9.07	11.87	.70	26.26	673.0	3.59	12.39
25	.69	6.86	484.9	3.21	17.83	.14	1.09	375.2	1.31	23.52
26	1.66	48.39	641.2	1.06	12.28	.12	3.05	547.1	.66	16.07
27	1.07	18.10	885.0	11.22	9.68	1.27	48.85	762.5	4.65	10.53
28	.88	18.70	469.1	2.44	17.71	.13	1.19	411.7	1.01	21.44
29	2.48	63.70	909.7	5.41	8.72	.59	23.12	873.7	2.90	9.73
30	1.06	16.51	780.3	10.52	10.96	1.41	51.51	658.0	4.35	11.94
31	.81	5.79	469.1	3.83	18.46	.15	1.03	400.5	1.27	22.05
32	1.39	50.70	477.7	1.11	15.80	.05	3.43	511.8	1.21	17.16
BAG (CALC.)	.68	11.55	705.8	6.61	12.22	.66	28.92	586.8	2.56	13.99
BAG (ACT.)	.71	11.65	705.8	6.83	12.22	.66	29.33	576.2	2.60	14.21
33	.36	7.20	147.9	.19	55.37	.03	.00	110.1	.42	80.50
34	3.86	60.13	1777.1	2.23	4.71	1.20	.01	1347.4	3.23	6.57
35	1.85	27.53	887.1	1.15	9.48	.56	.15	707.4	.67	12.51
36	.83	11.12	615.7	.59	13.96	.28	0.00	471.9	.46	18.77
37	.39	2.32	461.4	1.19	19.04	.16	0.00	349.8	1.09	25.33
38	.23	1.43	525.3	2.58	16.80	.14	0.00	416.3	.88	21.30
39	.14	1.82	626.4	4.76	14.09	.09	.07	485.0	2.13	18.29

EMISSION RESULTS IN GRAMS PER MILE (PER MINUTE FOR IDLE)
FUEL ECONOMY IN MILES PER GALLON (PER MINUTE FOR IDLE)

APPENDIX H

LISTING OF MODAL RESULTS ON INDIVIDUAL VEHICLES

ST. LOUIS

	VEH	YEAR	MAKE	MODL	CID	VEH	YEAR	MAKE	MODL	CID
	5070	1975	OLDS	98	455	5071	1975	PLYM	VALI	225
MODE NO.	HC	CO	CO2	NOXC	FUEL ECONOMY	HC	CO	CO2	NOXC	FUEL ECONOMY
1	2.71	101.00	1214.0	3.68	6.43	5.19	156.84	741.3	6.01	8.84
2	1.41	13.58	473.1	.35	17.79	3.31	69.86	292.7	1.67	21.49
3	4.26	130.70	1346.8	2.08	5.67	8.28	290.59	753.3	1.75	7.18
4	1.80	53.66	804.4	1.88	9.92	3.14	81.01	472.0	3.15	14.57
5	.35	9.01	754.4	1.81	11.53	1.65	31.16	379.3	4.57	20.47
6	.44	.82	399.3	1.18	22.08	2.54	15.15	181.9	1.60	41.53
7	.90	54.43	954.6	4.20	8.51	2.74	80.81	621.4	9.27	11.72
8	.37	.80	414.5	2.16	21.29	1.15	6.79	248.8	1.80	33.73
9	.22	8.32	746.1	2.64	11.68	1.23	20.64	492.0	4.78	16.80
10	1.32	6.12	341.6	1.25	24.97	3.87	20.21	185.3	1.05	38.71
11	1.12	79.66	1015.1	4.53	7.76	1.92	43.42	689.3	9.75	11.62
12	1.94	8.55	370.3	1.33	22.76	5.22	23.56	197.9	1.37	35.29
13	.93	70.20	1002.1	3.49	7.96	1.73	39.42	663.1	8.13	12.15
14	1.37	8.88	381.1	1.27	22.22	2.87	11.43	237.1	1.19	33.60
15	1.83	65.90	350.8	.50	19.29	2.17	26.84	269.3	1.60	27.88
16	9.52	275.17	656.9	.56	7.93	7.60	244.21	423.5	.51	10.68
17	2.29	128.96	943.3	2.92	7.70	2.75	70.06	543.7	6.25	13.40
18	2.23	28.85	392.6	.65	19.94	3.62	28.43	217.3	1.56	32.46
19	2.43	101.30	759.4	2.27	9.58	2.72	66.66	489.9	4.63	14.71
20	2.83	44.16	446.1	.53	16.92	4.80	39.41	234.2	1.87	28.51
21	1.86	123.48	1053.4	5.41	7.08	2.75	81.61	738.8	11.32	10.13
22	2.39	23.66	421.3	.77	19.04	4.76	19.61	234.4	1.52	31.66
23	4.47	203.98	820.5	1.64	7.68	3.95	123.95	583.7	3.07	11.22
24	1.21	66.28	575.9	1.70	12.98	1.79	33.40	449.7	5.07	17.48
25	1.61	20.40	429.7	.92	19.01	1.27	7.16	314.3	1.68	26.93
26	3.34	154.62	501.4	.27	11.76	2.21	42.08	390.2	2.07	19.15
27	1.53	94.87	809.5	2.40	9.21	2.01	44.83	525.4	6.06	14.74
28	2.53	30.89	438.4	.90	17.93	3.59	25.93	277.9	1.33	26.89
29	4.32	178.76	642.2	.98	9.47	3.42	104.62	505.8	2.69	13.03
30	1.19	65.21	601.5	2.18	12.54	1.73	37.02	450.4	4.99	17.26
31	1.19	18.91	482.6	1.46	17.20	.63	7.91	338.0	1.93	25.19
32	3.68	105.51	453.3	.35	14.07	3.20	58.52	435.9	3.55	16.50
BAG (CALC.)	1.51	51.78	624.5	2.03	12.49	2.44	39.01	400.2	4.04	18.91
BAG (ACT.)	1.57	53.17	621.1	2.08	12.51	2.60	38.95	386.6	4.23	19.46
33	.64	10.50	97.4	.05	76.58	.86	29.36	44.2	.02	95.36
34	7.35	101.70	1215.0	.54	6.35	10.27	342.27	532.0	.27	8.05
35	1.14	3.62	629.1	.27	13.90	5.50	166.66	369.6	.27	13.68
36	.57	1.63	513.1	.36	17.15	3.31	108.10	254.1	.18	20.43
37	.62	0.00	427.6	.91	20.66	1.57	27.66	238.3	1.92	30.95
38	.29	0.00	478.3	1.96	18.52	1.14	9.77	288.5	2.10	28.86
39	.08	0.00	549.0	4.98	16.16	.39	3.39	354.0	2.89	24.61

EMISSION RESULTS IN GRAMS PER MILE (PER MINUTE FOR IDLE)
FUEL ECONOMY IN MILES PER GALLON (PER MINUTE FOR IDLE)

APPENDIX H

LISTING OF MODAL RESULTS ON INDIVIDUAL VEHICLES

ST. LOUIS

	VEH	YEAR	MAKE	MODL	CID	VEH	YEAR	MAKE	MODL	CID
	5072	1975	PLYM	VALI	318	5073	1975	PONT	CATA	400
MODE NO.	HC	CO	CO2	NOXC	FUEL ECONOMY	HC	CO	CO2	NOXC	FUEL ECONOMY
1	2.31	42.57	979.6	2.46	8.42	2.27	86.14	1295.1	10.76	6.17
2	.74	27.31	397.2	.84	20.06	2.95	95.07	389.3	.68	16.19
3	3.70	47.63	1047.5	1.55	7.83	6.09	215.96	1472.8	.98	4.85
4	2.00	46.62	682.8	.83	11.64	2.32	54.03	878.2	4.81	9.15
5	1.59	26.89	624.3	2.09	13.22	.76	12.94	722.3	6.60	11.91
6	.79	15.51	300.1	.30	27.15	2.70	19.19	219.2	.90	34.41
7	.75	14.49	807.2	5.80	10.66	1.23	29.11	988.2	9.36	8.55
8	.56	13.28	312.6	.57	26.47	1.35	6.57	305.8	3.11	27.70
9	.61	12.86	643.0	3.80	13.34	.19	.80	784.4	7.95	11.29
10	.57	11.83	271.2	.44	30.44	2.37	29.46	252.3	1.94	29.00
11	.56	12.51	804.2	6.97	10.75	1.37	41.89	946.5	10.46	8.73
12	.60	11.47	286.9	.64	28.93	3.81	38.21	274.0	3.17	25.64
13	.54	11.65	808.3	4.81	10.71	1.20	38.98	950.5	9.95	8.74
14	.68	17.53	316.6	.52	25.63	2.75	17.69	294.1	3.18	26.85
15	.67	23.94	389.4	.88	20.68	2.04	68.91	285.3	.98	22.19
16	.19	11.26	571.8	.82	15.04	7.39	218.68	625.7	0.00	8.94
17	.93	18.23	860.4	2.92	9.95	.96	32.02	977.4	10.08	8.61
18	.83	25.28	342.6	1.58	23.05	2.96	43.91	255.3	.85	26.60
19	1.14	27.13	668.5	1.00	12.42	1.21	34.60	844.8	6.77	9.83
20	.92	31.34	365.0	.82	21.27	4.37	54.14	365.8	1.48	19.10
21	.81	15.57	839.1	7.69	10.25	1.91	63.90	1048.2	9.34	7.69
22	.82	22.85	357.3	.49	22.42	3.49	31.18	335.2	2.90	22.46
23	1.63	44.32	864.7	.93	9.45	2.09	85.21	969.0	7.34	8.00
24	1.01	19.51	510.9	1.72	16.29	.48	11.82	631.0	7.15	13.63
25	.98	27.04	427.7	.65	18.75	1.57	8.31	338.2	3.87	24.92
26	.95	29.75	549.9	.80	14.80	2.62	67.48	485.6	1.42	14.79
27	.66	11.22	700.1	3.15	12.33	.64	20.65	829.1	9.17	10.28
28	.86	22.80	370.7	.60	21.69	2.92	26.80	348.8	3.09	22.18
29	1.93	47.09	637.8	.72	12.36	2.20	82.49	914.9	3.27	8.44
30	1.24	24.39	461.1	1.68	17.63	.81	30.45	714.6	5.41	11.60
31	1.03	31.13	382.0	.71	20.44	.98	6.99	357.6	4.76	23.88
32	.99	44.50	487.5	.85	15.83	2.80	64.10	353.4	1.31	19.17
BAG (CALC.)	.82	19.23	539.3	2.17	15.51	1.67	34.79	571.4	5.81	14.06
BAG (ACT.)	.83	19.88	525.7	2.21	15.86	1.80	36.04	557.6	5.96	14.32
33	.03	0.00	91.3	.08	97.15	1.10	41.09	83.4	.04	58.60
34	2.46	21.86	1827.4	1.46	4.75	15.17	519.18	981.1	.51	4.81
35	3.81	85.29	855.4	.95	8.86	7.81	229.97	557.3	.25	9.41
36	.29	2.32	623.1	.41	14.14	4.68	151.08	364.1	.17	14.40
37	1.61	39.37	304.8	.65	23.88	1.49	36.94	352.6	.77	21.37
38	1.67	47.99	304.8	1.81	23.02	.15	1.55	424.7	1.96	20.76
39	1.32	21.72	381.8	.78	21.12	.07	.12	501.4	5.85	17.69

EMISSION RESULTS IN GRAMS PER MILE (PER MINUTE FOR IDLE)
FUEL ECONOMY IN MILES PER GALLON (PER MINUTE FOR IDLE)

APPENDIX H

LISTING OF MODAL RESULTS ON INDIVIDUAL VEHICLES

ST. LOUIS

	VEH	YEAR	MAKE	MODL	CID	VEH	YEAR	MAKE	MODL	CID
	5074	1975	PONT	F1RE	350	5075	1975	DATS	B210	85
MODE NO.	HC	CO	CO2	NOXC	FUEL ECONOMY	HC	CO	CO2	NOXC	FUEL ECONOMY
1	7.52	189.17	1137.7	8.34	6.08	2.97	30.96	528.4	4.96	15.13
2	2.63	50.06	362.0	1.13	19.77	.60	4.62	218.1	1.31	39.06
3	13.19	358.84	1078.8	.82	5.27	3.12	61.74	439.8	2.01	16.23
4	2.44	59.62	784.6	4.27	10.02	1.44	12.18	334.8	3.04	24.76
5	.93	23.69	717.8	5.34	11.71	1.24	5.38	301.6	3.76	28.26
6	.53	9.79	259.3	.57	32.12	.40	2.61	176.2	1.21	48.89
7	3.29	136.18	861.6	5.88	8.17	2.23	35.84	382.0	6.16	19.93
8	.29	9.09	241.2	1.69	34.62	.36	2.51	194.2	2.16	44.54
9	.34	13.70	731.0	5.73	11.78	.87	6.21	346.0	4.63	24.76
10	2.76	18.40	252.8	2.11	30.56	.32	2.34	177.1	1.29	48.82
11	3.52	148.26	820.7	6.27	8.33	1.41	29.12	439.6	7.14	18.12
12	3.15	19.37	253.9	1.88	30.15	.36	4.24	208.2	1.50	41.08
13	3.29	133.33	834.6	6.99	8.42	1.66	30.14	457.2	7.24	17.41
14	1.15	8.36	319.4	3.09	26.40	.26	2.37	176.9	1.76	48.90
15	.24	10.90	380.7	1.50	22.27	.48	3.08	196.2	1.57	43.82
16	5.11	175.46	686.2	1.12	9.07	1.33	42.30	321.2	1.24	22.65
17	4.04	138.51	818.7	5.34	8.46	1.75	25.01	434.2	6.69	18.53
18	1.41	20.33	329.7	.60	24.24	.39	2.58	199.5	1.16	43.34
19	2.31	86.77	755.7	6.11	9.87	1.31	10.87	423.7	5.39	19.95
20	4.93	41.35	380.5	1.06	19.25	.43	3.59	211.5	1.18	40.62
21	4.63	200.09	862.8	5.42	7.45	2.13	49.14	490.6	7.51	15.45
22	3.95	22.30	346.1	1.75	22.55	.35	3.34	194.6	1.89	44.18
23	4.75	125.83	866.2	5.90	8.23	1.94	29.37	456.1	3.42	17.46
24	1.17	46.20	668.5	5.68	11.92	1.09	12.73	342.3	5.15	24.26
25	.17	6.40	346.3	2.05	24.87	.36	3.00	202.0	2.36	42.70
26	1.42	27.63	471.9	2.18	17.07	.76	6.31	291.4	1.97	29.22
27	2.61	97.24	739.5	6.02	9.85	1.22	15.33	400.8	5.77	20.70
28	3.60	25.94	342.6	1.67	22.48	.35	3.62	218.0	1.97	39.48
29	4.35	108.15	818.8	3.76	8.85	1.57	21.43	403.9	3.35	20.05
30	2.10	109.90	622.7	4.13	11.07	1.36	21.53	339.1	5.51	23.52
31	.44	9.12	430.5	2.73	19.89	.36	3.66	221.7	2.67	38.82
32	1.96	36.09	453.1	1.68	17.20	.81	10.29	291.1	2.66	28.65
BAG (CALC.)	2.75	60.67	538.0	4.03	13.82	.85	12.28	299.0	3.55	27.65
BAG (ACT.)	2.96	59.35	517.2	4.03	14.32	.87	12.82	295.6	3.29	27.87
33	1.57	32.63	64.2	.02	73.66	.23	6.05	30.2	.02	219.38
34	22.31	395.85	750.1	.28	6.15	2.36	57.71	386.0	.24	18.33
35	11.43	198.64	386.1	.14	12.08	1.53	37.98	249.2	.12	28.29
36	3.06	74.86	421.0	.28	16.18	1.35	24.87	196.5	.32	37.00
37	.89	3.60	342.3	1.82	25.30	.69	1.44	188.5	1.34	45.99
38	.39	3.91	407.3	1.11	21.40	.59	2.23	208.6	1.79	41.48
39	.11	.08	475.9	6.15	18.63	.55	2.74	237.6	4.30	36.42

EMISSION RESULTS IN GRAMS PER MILE (PER MINUTE FOR IDLE)
FUEL ECONOMY IN MILES PER GALLON (PER MINUTE FOR IDLE)

APPENDIX H

LISTING OF MODAL RESULTS ON INDIVIDUAL VEHICLES

ST. LOUIS

	VEH	YEAR	MAKE	MODL	CID	VEH	YEAR	MAKE	MODL	CID
	5076	1975	TOYO	CELI	133	5077	1975	TOYO	CORO	97
MODE NO.	HC	CO	CO2	NOXC	FUEL ECONOMY	HC	CO	CO2	NOXC	FUEL ECONOMY
1	2.68	19.17	653.9	10.14	12.82	4.88	29.16	688.7	5.63	11.83
2	1.43	12.09	392.0	2.01	21.36	.20	6.14	348.6	.49	24.73
3	2.60	48.09	811.4	3.00	9.91	.82	19.63	950.9	3.30	9.02
4	1.38	12.26	506.9	6.67	16.73	1.21	15.23	433.2	2.23	19.25
5	.96	7.07	426.2	9.64	20.16	.91	8.25	407.3	3.89	20.97
6	.52	5.22	274.3	2.88	31.24	.11	3.72	220.0	.89	39.24
7	.62	9.74	530.6	10.15	16.20	.87	44.10	426.4	3.49	17.81
8	.52	2.88	282.8	6.44	30.71	.08	3.88	248.3	1.66	34.85
9	.66	3.20	443.0	10.85	19.72	.25	5.33	380.5	4.78	22.78
10	.49	4.30	263.9	3.62	32.61	.08	3.72	233.0	1.04	37.12
11	.91	8.61	562.4	13.15	15.33	1.11	18.93	489.8	5.22	16.97
12	1.20	4.17	284.7	5.09	30.08	.16	4.92	244.0	1.32	35.19
13	1.08	8.96	544.5	12.97	15.79	1.77	16.35	511.4	5.86	16.35
14	.62	3.25	313.1	5.04	27.72	.10	3.25	260.4	1.19	33.39
15	.36	14.60	356.5	1.59	23.32	.22	6.68	245.9	.59	34.52
16	5.80	27.19	824.9	1.25	10.02	.38	17.32	716.7	.52	11.91
17	1.48	10.77	521.8	11.07	16.33	1.94	15.36	496.7	5.84	16.84
18	.88	5.67	296.5	3.25	28.80	.15	4.99	263.5	.78	32.65
19	.97	8.93	457.7	8.19	18.69	.84	11.81	418.4	4.57	20.19
20	.87	8.01	408.4	3.20	20.95	.21	5.78	315.2	.77	27.31
21	2.08	21.91	570.0	7.71	14.52	2.55	54.97	523.3	3.62	14.37
22	.86	5.05	321.6	5.25	26.71	.14	4.83	278.0	1.20	31.03
23	2.04	16.00	505.6	8.39	16.52	3.00	18.87	552.0	3.99	15.01
24	.66	4.79	393.8	8.33	22.00	.55	7.87	337.4	4.21	25.25
25	.62	3.27	361.6	7.78	24.07	.08	4.30	278.0	1.67	31.14
26	.62	20.71	480.6	1.76	17.23	.21	11.80	334.5	.59	25.09
27	.95	6.09	443.7	10.73	19.45	1.21	10.12	422.3	5.46	20.08
28	.52	4.98	345.3	5.44	25.02	.12	4.72	288.2	1.28	29.98
29	1.82	16.13	459.4	4.34	18.09	2.08	11.97	426.4	3.21	19.64
30	.62	5.68	414.3	7.05	20.67	.49	10.33	360.0	3.90	23.49
31	.52	3.20	408.2	8.41	21.39	.12	4.93	296.7	2.12	29.12
32	.40	18.01	447.6	1.78	18.60	.25	9.48	439.6	.58	19.49
BAG (CALC.)	.81	7.38	408.1	7.81	21.02	.57	10.09	361.5	2.84	23.41
BAG (ACT.)	.82	7.14	387.5	7.78	22.12	.55	9.52	351.1	2.96	24.13
33	.09	3.18	42.2	.02	187.07	.01	.27	56.2	.02	156.50
34	1.17	40.60	647.1	.22	12.42	.23	13.01	745.7	.27	11.57
35	1.97	26.39	635.6	1.53	12.99	.26	12.29	591.6	.54	14.51
36	.73	15.55	408.5	.95	20.39	.20	8.64	387.1	.36	22.12
37	.38	13.67	327.1	2.25	25.37	.10	4.86	298.3	.72	28.98
38	.45	5.20	281.0	4.34	30.54	.09	3.90	258.3	1.24	33.53
39	.32	2.98	341.7	9.02	25.55	.12	3.50	297.4	2.57	29.26

EMISSION RESULTS IN GRAMS PER MILE (PER MINUTE FOR IDLE)
FUEL ECONOMY IN MILES PER GALLON (PER MINUTE FOR IDLE)

APPENDIX H

LISTING OF MODAL RESULTS ON INDIVIDUAL VEHICLES

ST. LOUIS

	VEH	YEAR	MAKE	MODL	CID	VEH	YEAR	MAKE	MODL	CID
	5078	1975	VOLK	SCIR	90	4080	1974	AMC	AMBA	360
MODE NO.	HC	CO	CO2	NOXC	FUEL ECONOMY	HC	CO	CO2	NOXC	FUEL ECONOMY
1	2.10	185.84	616.4	.61	9.70	33.27	44.16	1036.1	15.07	7.33
2	.11	2.44	285.9	.17	30.60	11.89	19.57	342.9	.88	21.58
3	.68	74.96	1016.4	.31	7.81	30.18	101.80	1102.9	7.37	6.53
4	.47	52.29	477.2	.36	15.82	21.44	24.63	699.3	9.44	11.01
5	.49	59.51	364.8	.48	19.30	20.14	9.91	690.1	11.02	11.53
6	.04	1.20	179.0	.11	49.04	8.01	5.58	268.0	1.85	29.37
7	2.09	108.95	300.1	.42	18.57	35.70	82.62	912.7	11.65	7.68
8	.08	8.25	235.9	.16	35.63	12.02	5.35	319.9	3.01	24.22
9	.74	56.96	324.2	1.37	21.33	24.15	7.69	742.0	13.35	10.68
10	.06	5.98	188.2	.14	44.88	10.57	5.95	305.0	2.37	25.51
11	2.09	133.01	329.7	.83	16.27	32.38	17.85	934.0	15.27	8.34
12	.11	6.82	191.3	.16	43.87	11.46	6.69	304.8	2.11	25.24
13	2.01	122.71	359.7	.89	15.88	30.70	42.58	877.8	13.24	8.52
14	.13	11.47	188.9	.18	42.80	11.72	5.57	346.6	3.90	22.61
15	0.00	2.87	230.3	.12	37.80	8.82	6.89	324.1	1.31	24.45
16	0.00	3.37	699.7	.36	12.59	26.26	90.75	518.9	.48	11.92
17	1.16	107.62	374.9	.53	16.21	27.50	36.36	848.6	11.64	8.94
18	.05	3.53	217.4	.09	39.78	9.89	7.68	318.4	2.48	24.53
19	.81	76.49	349.3	.45	18.80	21.14	23.19	652.6	10.13	11.74
20	.05	3.89	248.0	.11	34.90	12.92	9.74	376.4	2.35	20.51
21	2.63	141.43	309.3	.62	16.44	35.35	53.09	988.1	13.71	7.50
22	.14	9.79	224.5	.16	36.93	13.77	7.92	363.9	3.75	21.13
23	1.02	129.63	571.4	.47	11.40	24.66	46.97	798.3	10.81	9.34
24	.98	61.29	281.8	.52	23.28	17.93	6.03	608.1	10.16	13.16
25	.15	16.53	245.1	.18	32.69	14.89	6.12	457.7	5.97	17.25
26	.16	2.82	418.9	.17	20.94	14.80	7.28	546.7	3.11	14.67
27	1.36	99.02	296.1	.58	19.46	24.70	20.55	710.9	11.59	10.80
28	.19	18.34	251.3	.20	31.61	15.67	7.71	426.7	4.93	18.17
29	.81	101.72	461.4	.23	14.23	19.85	41.20	664.0	8.26	11.21
30	1.15	79.98	277.9	.34	21.80	19.89	8.33	628.6	9.69	12.59
31	.21	20.30	231.3	.24	33.64	17.05	8.30	463.8	6.90	16.72
32	.09	4.98	339.2	.17	25.55	14.22	10.48	498.9	2.59	15.84
BAG (CALC.)	.68	48.18	295.4	.41	23.78	18.98	16.47	563.0	7.74	13.67
BAG (ACT.)	.74	49.07	288.6	.41	24.11	17.93	16.72	556.3	7.96	13.88
33	.04	0.00	66.1	.02	133.90	2.85	15.69	73.5	.12	82.82
34	.58	0.00	841.3	.27	10.53	48.48	166.76	880.9	1.25	6.84
35	.19	0.00	626.2	.41	14.16	24.46	81.84	451.1	.62	13.50
36	.17	0.00	417.6	.28	21.22	18.61	39.06	345.6	.42	19.05
37	.10	.02	345.0	.22	25.70	8.42	4.67	378.0	2.85	21.54
38	.51	33.14	284.9	.12	26.21	10.77	5.98	439.0	5.71	18.39
39	.36	18.62	308.7	.26	26.18	16.52	8.16	530.3	9.60	14.90

EMISSION RESULTS IN GRAMS PER MILE (PER MINUTE FOR IDLE)
FUEL ECONOMY IN MILES PER GALLON (PER MINUTE FOR IDLE)

APPENDIX H

LISTING OF MODAL RESULTS ON INDIVIDUAL VEHICLES

ST. LOUIS

	VEH	YEAR	MAKE	MODL	CID	VEH	YEAR	MAKE	MODL	CID
	4081	1974	BUIC	CNTY	350	4082	1974	CADI	DEVI	472
MODE NO.	HC	CO	CO2	NOXC	FUEL ECONOMY	HC	CO	CO2	NOXC	FUEL ECONOMY
1	4.81	71.29	1047.2	9.47	7.56	3.61	41.88	1753.3	8.21	4.85
2	1.42	30.43	479.1	.90	16.70	1.08	16.70	540.7	1.59	15.56
3	6.21	134.70	1312.0	3.04	5.75	4.76	53.07	1783.4	2.59	4.72
4	3.01	34.72	707.6	5.19	11.50	2.55	20.36	1043.4	4.33	8.19
5	2.21	12.78	620.5	6.10	13.71	1.79	19.82	903.8	4.64	9.44
6	1.03	9.78	339.6	1.67	24.78	1.70	9.36	361.7	1.11	23.25
7	3.21	70.25	748.9	9.24	10.21	2.74	167.50	1189.1	6.68	6.07
8	1.77	6.56	376.4	3.59	22.62	2.18	8.58	440.0	2.00	19.28
9	1.75	7.69	569.9	8.67	15.11	1.48	60.04	923.5	3.92	8.68
10	1.24	6.85	311.0	2.32	27.25	2.14	8.05	411.0	1.31	20.62
11	2.00	12.08	792.3	13.66	10.86	2.08	96.55	1215.7	5.93	6.46
12	1.31	11.02	388.9	3.06	21.63	2.80	9.77	445.4	1.66	18.90
13	2.21	15.51	759.3	11.89	11.23	2.05	82.22	1206.2	6.53	6.61
14	1.31	6.37	363.3	3.54	23.51	2.21	8.50	465.7	1.97	18.26
15	.82	17.76	461.5	.32	18.04	.73	17.51	466.1	2.02	17.90
16	2.90	79.78	920.7	0.00	8.41	2.50	55.07	883.9	1.20	9.07
17	2.62	22.98	779.3	9.80	10.78	2.58	61.43	1190.9	6.18	6.85
18	1.45	17.93	390.0	2.07	20.99	1.58	14.08	450.7	1.05	18.58
19	2.23	21.69	637.9	6.90	13.07	2.33	51.54	1020.8	5.06	8.00
20	1.14	15.36	518.1	2.43	16.26	2.10	21.16	494.5	1.14	16.61
21	2.55	23.85	835.8	12.84	10.07	2.64	164.36	1362.9	7.11	5.45
22	1.57	9.21	423.1	3.61	20.06	2.48	12.64	504.3	1.71	16.68
23	3.41	51.56	869.9	5.86	9.23	3.20	61.07	1314.3	5.12	6.25
24	1.67	10.98	562.0	6.72	15.18	1.55	54.41	862.1	4.50	9.32
25	1.95	10.38	435.0	5.71	19.40	1.88	11.90	574.9	2.97	14.80
26	1.07	30.34	683.4	1.64	12.08	1.34	36.47	719.9	2.25	11.36
27	2.08	15.97	667.8	9.86	12.69	1.92	67.30	1008.8	5.01	7.92
28	1.26	10.92	429.9	4.02	19.68	1.86	14.28	528.8	1.84	15.93
29	2.94	62.38	735.9	3.24	10.53	2.83	72.91	1091.2	3.52	7.31
30	1.48	13.66	545.6	5.86	15.52	1.62	68.56	830.7	3.78	9.41
31	1.82	9.72	455.9	6.24	18.61	1.70	11.96	567.3	3.08	15.01
32	.91	34.21	594.7	1.37	13.63	1.23	35.37	622.3	1.71	13.02
BAG (CALC.)	1.69	17.78	558.5	6.31	15.00	1.69	40.27	762.7	3.50	10.68
BAG (ACT.)	1.85	17.89	533.9	6.42	15.63	1.75	38.02	762.7	3.69	10.72
33	.64	16.90	106.3	.08	65.78	.38	9.87	117.9	.08	65.94
34	7.36	197.18	1324.5	1.01	5.35	4.85	75.45	1486.8	1.19	5.48
35	3.22	82.68	706.2	.50	10.49	2.34	33.94	775.3	.75	10.62
36	1.68	46.23	495.3	.34	15.48	1.44	12.90	605.6	.69	14.08
37	2.14	19.83	376.4	.55	21.42	1.00	12.45	461.3	1.19	18.34
38	1.50	7.38	392.0	3.41	21.73	.56	16.68	546.0	1.03	15.46
39	1.19	8.14	444.8	6.60	19.24	.32	8.80	668.3	2.83	12.99

EMISSION RESULTS IN GRAMS PER MILE (PER MINUTE FOR IDLE)
FUEL ECONOMY IN MILES PER GALLON (PER MINUTE FOR IDLE)

APPENDIX H

LISTING OF MODAL RESULTS ON INDIVIDUAL VEHICLES

ST. LOUIS

	VEH	YEAR	MAKE	MODL	CID	VEH	YEAR	MAKE	MODL	CID
	4083	1974	CHEV	VEGA	140	4084	1974	CHEV	CHEL	350
MODE NO.	HC	CO	CO2	NOXC	FUEL ECONOMY	HC	CO	CO2	NOXC	FUEL ECONOMY
1	4.52	20.22	711.8	7.30	11.71	5.17	54.08	1009.3	3.30	7.99
2	1.96	24.50	232.1	1.26	32.06	2.93	12.40	407.4	.40	20.35
3	5.83	24.34	754.7	3.61	10.94	4.81	63.31	1351.8	.44	6.05
4	3.11	17.21	438.8	3.13	18.66	2.37	30.30	726.1	1.09	11.36
5	2.24	11.96	428.9	5.26	19.51	2.00	15.42	616.1	2.60	13.72
6	.98	6.53	200.4	1.01	41.52	2.76	7.32	267.8	.73	30.81
7	3.26	49.72	544.0	9.80	14.03	5.61	225.97	725.1	2.60	8.08
8	1.24	21.34	223.2	2.36	34.04	2.60	6.97	314.4	2.62	26.60
9	1.82	25.07	420.1	5.99	19.07	2.28	36.68	631.4	4.79	12.75
10	1.09	15.34	177.4	1.73	43.29	3.58	5.22	291.4	1.83	28.54
11	2.62	55.18	484.8	9.99	15.31	4.15	103.71	766.8	4.75	9.41
12	1.86	25.95	252.3	2.00	29.68	6.85	8.09	374.9	2.43	21.68
13	2.71	46.26	543.4	9.61	14.21	4.39	114.03	738.5	3.73	9.53
14	1.22	18.11	184.5	1.67	40.93	4.38	5.81	292.3	2.71	28.15
15	1.46	18.35	211.3	1.66	36.26	1.20	10.04	371.5	.46	22.69
16	4.42	0.00	482.2	0.00	17.88	2.57	20.10	770.7	0.00	10.95
17	2.95	16.95	557.2	8.96	14.96	3.63	45.42	814.2	5.20	9.89
18	1.16	8.50	207.1	1.04	39.61	3.48	11.96	336.2	.72	24.25
19	2.67	13.58	513.7	5.84	16.33	2.64	40.95	777.9	2.86	10.43
20	1.56	11.83	262.5	1.09	31.03	4.09	11.85	371.2	1.23	22.04
21	3.40	71.45	622.3	10.62	11.91	7.53	281.27	759.5	2.42	7.24
22	1.63	23.74	221.8	1.72	33.59	4.63	7.82	371.1	2.58	22.30
23	3.96	11.84	546.7	5.87	15.36	3.77	34.04	864.0	1.50	9.55
24	2.23	29.23	370.6	6.25	20.95	1.97	35.70	541.9	3.14	14.69
25	1.63	24.26	236.1	3.23	31.77	3.14	8.24	359.4	3.11	23.21
26	2.90	26.32	405.7	2.85	19.45	1.74	23.08	665.7	.58	12.54
27	2.55	28.10	488.3	8.60	16.42	2.89	44.06	670.7	5.47	11.85
28	1.73	24.97	245.2	2.20	30.61	4.76	7.23	371.0	2.31	22.33
29	3.77	26.31	410.9	3.75	19.12	2.88	38.47	773.1	1.12	10.53
30	2.55	36.48	421.4	6.02	18.23	2.59	83.37	503.4	2.64	13.81
31	1.63	28.08	239.2	3.15	30.76	2.89	11.36	400.6	4.00	20.75
32	2.59	28.57	340.1	2.06	22.57	2.80	18.21	531.7	.40	15.59
BAG (CALC.)	2.08	29.85	347.1	4.67	22.16	3.23	41.29	528.3	3.09	14.71
BAG (ACT.)	2.08	30.07	343.7	4.71	22.33	3.40	42.39	518.1	3.13	14.90
33	.50	3.79	58.9	.25	133.62	.49	4.36	85.4	.04	94.62
34	5.97	23.73	730.7	3.69	11.28	9.16	8.94	910.7	.52	9.31
35	3.12	17.40	376.1	1.63	21.47	1.44	29.53	829.4	.39	10.08
36	2.32	16.27	258.1	.71	30.50	1.22	23.78	523.1	.26	15.73
37	2.06	10.14	227.7	1.34	35.48	.72	16.45	397.8	.35	20.84
38	1.71	3.04	276.6	1.53	30.95	1.10	12.12	400.9	.91	20.96
39	1.66	16.86	283.3	3.62	28.17	1.06	4.93	452.9	3.46	19.13

EMISSION RESULTS IN GRAMS PER MILE (PER MINUTE FOR IDLE)
FUEL ECONOMY IN MILES PER GALLON (PER MINUTE FOR IDLE)

APPENDIX H

LISTING OF MODAL RESULTS ON INDIVIDUAL VEHICLES

ST. LOUIS

	VEH	YEAR	MAKE	MODL	CID	VEH	YEAR	MAKE	MODL	CID
	4085	1974	CHEV	NOVA	250	4086	1974	CHEV	NOVA	350
MODE NO.	HC	CO	CO2	NOXC	FUEL ECONOMY	HC	CO	CO2	NOXC	FUEL ECONOMY
1	3.97	50.40	852.9	7.40	9.39	4.90	68.99	960.9	4.63	8.18
2	1.86	22.69	287.5	.15	26.97	.74	42.81	520.5	.43	15.04
3	5.41	146.58	934.0	3.42	7.51	5.05	155.70	884.1	.79	7.75
4	2.33	15.41	632.9	3.75	13.36	2.75	36.41	732.2	1.45	11.12
5	1.28	3.59	581.5	4.99	15.01	2.21	18.36	636.4	2.82	13.20
6	2.81	7.67	192.0	.10	41.68	1.17	20.44	333.1	.69	24.05
7	2.44	26.59	727.3	15.34	11.43	5.41	106.07	660.8	4.20	10.51
8	4.17	8.23	217.2	.65	36.47	3.17	23.60	323.8	1.62	23.93
9	.93	5.04	560.2	8.13	15.54	2.36	19.99	521.5	5.25	15.84
10	4.22	11.00	189.3	.43	40.35	1.50	10.40	341.8	1.39	24.45
11	1.82	12.16	704.1	11.48	12.18	3.84	56.75	725.7	6.60	10.73
12	4.38	11.92	185.6	.22	40.67	4.29	23.61	351.1	1.73	22.09
13	1.78	14.21	737.6	11.49	11.59	3.27	45.31	762.6	6.41	10.51
14	3.28	11.64	175.4	.42	43.50	1.97	10.44	370.2	1.71	22.59
15	.97	26.21	276.0	.16	27.72	.63	22.17	492.9	.26	16.75
16	2.91	81.20	322.9	.48	19.31	.62	80.25	865.4	.61	8.93
17	1.99	20.17	630.2	7.74	13.28	3.03	45.84	777.3	4.31	10.33
18	3.93	15.45	189.5	.16	39.23	1.39	25.80	411.9	.53	19.43
19	1.82	10.51	698.0	8.26	12.32	2.42	29.84	672.3	2.34	12.21
20	4.22	17.33	189.4	.30	38.57	2.63	47.72	448.3	.72	16.69
21	2.10	24.36	758.2	16.45	11.05	5.58	161.16	747.3	3.59	8.72
22	4.48	15.85	198.9	.26	37.29	3.61	28.14	404.6	1.48	19.29
23	3.60	45.24	722.5	6.44	11.02	3.20	70.03	858.5	1.76	9.07
24	1.08	3.94	546.0	8.28	15.97	2.00	29.19	564.1	3.23	14.40
25	4.75	10.77	159.5	.21	46.36	1.63	12.03	449.4	2.38	18.75
26	2.61	30.64	207.2	.39	33.67	1.22	42.90	757.1	.22	10.71
27	1.50	12.68	651.8	7.88	13.12	2.55	36.64	637.2	5.19	12.63
28	4.05	16.83	276.3	.29	28.12	1.15	10.04	471.8	1.90	18.07
29	3.41	38.75	650.4	4.19	12.29	2.91	98.89	734.7	.40	9.87
30	1.35	5.85	594.0	11.47	14.61	2.20	39.44	566.3	3.14	13.97
31	3.33	8.07	237.4	.42	34.05	1.76	18.03	465.2	2.48	17.78
32	2.54	26.12	313.3	.23	24.49	.84	34.72	724.2	.22	11.36
BAG (CALC.)	2.28	14.87	423.1	4.07	19.56	2.43	38.67	549.7	2.86	14.36
BAG (ACT.)	2.47	14.51	426.5	4.22	19.41	2.64	39.86	536.1	3.04	14.62
33	.51	15.29	47.7	.04	121.09	.60	20.40	112.6	.06	60.54
34	6.05	171.93	618.5	.25	9.78	4.78	194.35	1445.6	.74	5.03
35	2.99	75.93	354.0	.24	18.38	.92	60.68	1054.2	.49	7.70
36	2.11	38.29	388.6	.32	19.49	.56	41.62	649.0	.33	12.39
37	1.01	1.96	281.6	1.01	30.83	1.12	31.50	428.5	.25	18.43
38	1.10	2.08	332.6	1.02	26.16	1.09	18.40	427.7	.74	19.29
39	.84	2.58	382.4	3.36	22.81	1.01	11.05	467.0	3.10	18.20

EMISSION RESULTS IN GRAMS PER MILE (PER MINUTE FOR IDLE)
FUEL ECONOMY IN MILES PER GALLON (PER MINUTE FOR IDLE)

APPENDIX H

LISTING OF MODAL RESULTS ON INDIVIDUAL VEHICLES

ST. LOUIS

	VEH	YEAR	MAKE	MODL	CID	VEH	YEAR	MAKE	MODL	CID
	4087	1974	CHEV	CHEL	350	4088	1974	CHEV	STAW	400
MODE NO.	HC	CO	CO2	NOXC	FUEL ECONOMY	HC	CO	CO2	NOXC	FUEL ECONOMY
1	4.06	75.19	1361.1	3.77	5.95	6.94	200.33	1410.7	3.83	5.08
2	.79	6.94	417.4	.39	20.60	4.20	115.40	462.3	.09	13.51
3	3.94	34.13	1526.2	1.86	5.57	9.30	297.48	1569.1	.16	4.30
4	1.63	14.61	982.4	2.23	8.78	4.31	117.04	906.2	1.15	8.04
5	1.74	19.96	792.6	3.17	10.70	2.80	58.68	762.0	2.27	10.28
6	.84	4.48	218.4	.71	38.92	2.73	47.85	335.0	.50	21.19
7	3.67	211.94	937.2	2.72	6.92	5.67	228.74	956.0	4.27	6.66
8	2.24	2.91	250.7	1.55	33.83	3.54	51.55	327.0	1.86	21.17
9	1.59	47.85	756.4	3.62	10.61	3.30	81.76	827.5	4.34	9.18
10	1.32	4.72	261.1	.95	32.54	4.21	61.80	291.9	1.06	22.06
11	3.13	156.48	908.1	2.96	7.63	5.01	166.20	1029.6	6.37	6.79
12	2.68	7.35	242.3	1.03	33.83	5.72	68.03	291.9	1.39	21.29
13	3.32	145.93	922.2	2.90	7.64	5.27	169.71	983.7	5.49	7.00
14	1.53	4.81	287.4	1.40	29.60	4.41	62.68	349.0	1.51	19.23
15	.58	13.80	382.9	.28	21.84	2.77	75.43	332.7	.25	19.29
16	1.48	28.91	922.9	.67	9.12	9.53	379.85	837.6	.19	6.06
17	2.45	51.23	994.4	4.24	8.20	5.02	143.13	977.0	4.86	7.29
18	.67	7.13	322.5	.70	26.43	3.64	54.42	334.1	.66	20.58
19	1.99	62.85	933.0	3.15	8.55	3.96	125.59	849.4	2.94	8.38
20	.89	9.35	358.9	.89	23.58	4.17	92.57	414.1	.60	15.49
21	3.55	203.75	1064.2	3.40	6.36	6.77	288.31	1001.6	4.24	6.01
22	2.23	8.06	308.3	1.21	27.06	5.91	84.82	383.8	1.39	16.56
23	2.43	39.17	1218.2	3.20	6.89	6.44	192.98	1060.5	2.08	6.41
24	1.58	54.42	728.8	3.10	10.83	3.54	89.86	726.8	3.52	10.10
25	1.61	4.62	368.2	2.01	23.32	4.16	69.31	420.0	1.96	16.37
26	1.23	13.33	533.7	.57	15.89	4.67	107.35	587.1	.28	11.52
27	1.87	51.57	809.8	3.62	9.90	3.96	108.81	825.7	4.69	8.79
28	1.34	8.32	384.4	1.44	22.09	5.40	87.73	401.5	1.61	15.95
29	1.96	22.05	1007.0	1.96	8.47	5.92	194.43	815.0	.66	7.79
30	2.04	145.09	738.9	2.54	9.12	3.87	130.18	723.1	3.01	9.44
31	2.15	6.93	300.9	1.90	27.85	3.83	67.10	448.6	2.34	15.67
32	.77	16.99	527.2	.71	15.95	4.64	138.60	492.4	.27	12.24
BAG (CALC.)	1.58	38.39	590.9	2.34	13.52	4.24	109.75	622.1	2.73	10.98
BAG (ACT.)	1.57	35.21	594.2	2.57	13.56	4.59	113.01	625.8	2.95	10.85
33	.42	1.99	112.9	.17	75.63	1.28	44.36	98.9	.07	51.41
34	5.35	7.60	1308.7	1.78	6.64	16.08	540.04	1192.5	.61	4.24
35	1.23	7.78	844.1	.89	10.32	7.84	263.93	607.1	.31	8.48
36	.97	6.23	555.3	.68	15.62	4.53	176.32	518.4	.41	10.96
37	.80	3.71	469.0	.47	18.59	2.79	43.14	478.0	.40	16.00
38	.65	2.87	479.2	.94	18.27	2.34	44.50	467.4	1.02	16.29
39	.49	3.69	518.9	2.74	16.86	2.78	66.51	535.0	3.14	13.69

EMISSION RESULTS IN GRAMS PER MILE (PER MINUTE FOR IDLE)
FUEL ECONOMY IN MILES PER GALLON (PER MINUTE FOR IDLE)

APPENDIX H

LISTING OF MODAL RESULTS ON INDIVIDUAL VEHICLES

ST. LOUIS

	VEH	YEAR	MAKE	MODL	CID	VEH	YEAR	MAKE	MODL	CID
	4089	1974	CHRY	NEWP	400	4090	1974	DODG	CHAR	318
MODE NO.	HC	CO	CO2	NOxC	FUEL ECONOMY	HC	CO	CO2	NOXC	FUEL ECONOMY
1	6.24	162.61	1218.8	11.38	5.94	5.47	93.77	1071.2	6.82	7.18
2	2.73	92.84	431.1	0.00	15.16	2.61	70.82	304.2	.35	20.95
3	7.02	236.09	1442.3	3.38	4.84	7.09	197.04	1171.8	1.27	5.90
4	2.30	36.31	818.5	8.78	10.05	3.39	66.85	808.5	2.55	9.60
5	2.73	48.89	704.7	11.18	11.23	2.65	21.18	638.8	5.08	13.04
6	1.72	35.28	251.7	1.38	28.39	2.23	16.43	257.3	1.42	30.59
7	3.77	84.04	913.6	16.74	8.39	4.01	49.51	786.7	10.39	10.12
8	3.46	22.93	318.2	1.73	24.30	2.45	9.49	324.3	2.24	25.58
9	2.71	55.43	723.7	12.57	10.83	2.05	10.25	692.4	6.82	12.41
10	2.80	41.02	272.5	1.44	25.66	2.71	23.20	256.5	1.65	29.43
11	4.00	98.30	853.8	14.23	8.69	3.17	30.36	890.8	10.64	9.36
12	4.92	52.17	262.1	.90	24.68	3.74	23.10	347.3	2.25	22.45
13	3.86	94.30	904.8	13.26	8.33	3.24	33.98	827.8	9.27	9.96
14	3.18	34.71	270.7	3.08	26.47	2.62	17.20	277.7	2.36	28.36
15	1.41	55.82	392.7	.57	18.30	2.80	36.56	298.4	.45	24.33
16	6.12	269.73	693.8	.56	7.81	7.99	139.87	607.0	.44	10.41
17	4.09	101.64	963.9	10.28	7.81	3.85	38.11	883.9	7.08	9.28
18	2.44	49.62	267.6	1.63	25.12	2.37	26.43	301.5	1.91	25.32
19	3.67	99.56	911.8	9.30	8.22	2.90	35.67	602.8	4.33	13.29
20	2.79	72.89	363.5	1.53	18.23	2.40	32.09	349.6	1.63	21.77
21	4.63	118.81	1004.6	15.79	7.36	3.65	53.59	900.7	11.45	8.91
22	3.53	52.51	314.6	2.97	21.74	3.25	23.91	326.4	2.28	23.71
23	4.27	119.37	1095.4	9.06	6.85	4.26	92.97	852.9	3.84	8.77
24	2.94	58.97	662.4	11.30	11.61	2.03	20.13	617.3	5.23	13.54
25	3.66	29.70	306.4	4.01	24.34	2.17	12.51	387.5	3.56	21.44
26	2.73	64.11	583.9	1.19	12.80	2.67	58.63	432.4	.79	16.65
27	3.34	78.26	774.6	11.36	9.77	2.50	24.43	748.7	7.01	11.16
28	3.78	50.92	318.1	3.53	21.64	2.75	23.75	343.4	2.75	22.79
29	3.44	98.32	911.3	6.25	8.24	3.74	82.55	708.4	2.34	10.44
30	3.20	71.29	628.2	12.69	11.83	2.28	23.88	553.0	4.78	14.85
31	4.02	31.59	328.4	4.22	22.71	1.69	10.30	407.4	3.48	20.69
32	2.43	86.23	518.5	.89	13.41	2.39	56.19	428.6	.84	16.92
BAG (CALC.)	2.92	59.79	561.6	6.71	13.35	2.57	30.77	540.6	4.48	14.86
BAG (ACT.)	3.20	64.94	568.8	7.11	13.03	2.84	31.20	520.0	4.58	15.35
33	1.08	37.94	95.9	.07	55.85	.85	22.47	69.1	.04	82.83
34	12.02	413.78	1175.2	.56	4.76	9.40	251.47	852.7	.45	6.95
35	5.51	191.35	740.7	.41	8.38	4.09	123.82	678.0	.57	10.02
36	3.84	95.81	686.0	.56	10.46	3.16	82.33	444.6	.45	15.20
37	2.01	34.53	382.6	.70	20.02	2.26	41.40	280.6	.70	25.15
38	1.09	3.43	411.2	5.64	21.13	2.00	13.38	332.6	3.99	24.65
39	1.68	24.45	473.0	11.67	17.18	1.83	6.06	403.2	5.55	21.21

EMISSION RESULTS IN GRAMS PER MILE (PER MINUTE FOR IDLE)
FUEL ECONOMY IN MILES PER GALLON (PER MINUTE FOR IDLE)

APPENDIX H

LISTING OF MODAL RESULTS ON INDIVIDUAL VEHICLES

ST. LOUIS

	VEH	YEAR	MAKE	MODL	CID	VEH	YEAR	MAKE	MODL	CID
	4091	1974	FORD	PINT	122	4092	1974	FORD	TORI	302
MODE NO.	HC	CO	CO2	NOXC	FUEL ECONOMY	HC	CO	CO2	NOXC	FUEL ECONOMY
1	5.15	96.23	588.4	2.63	11.74	5.50	39.87	977.4	14.10	8.39
2	1.44	9.19	307.7	.75	27.16	1.60	18.92	409.6	1.04	19.97
3	4.45	142.33	673.5	.77	9.74	6.86	95.68	898.6	.80	8.29
4	.87	6.18	449.7	1.27	19.20	3.46	21.54	657.9	4.36	12.63
5	1.14	10.94	383.2	3.23	21.97	2.57	5.86	596.5	10.73	14.46
6	.37	5.14	200.7	1.73	42.28	1.33	4.62	266.0	1.97	31.98
7	1.72	47.23	367.4	3.57	19.85	5.22	124.50	740.7	8.64	9.31
8	.68	5.76	222.4	3.42	37.99	1.93	4.17	297.1	6.15	28.65
9	.83	12.86	374.6	4.66	22.33	2.30	2.52	579.8	15.50	15.02
10	1.87	10.10	191.9	2.32	41.52	3.34	9.34	262.2	3.84	30.88
11	5.28	81.47	420.7	4.09	15.69	4.35	26.75	804.7	19.91	10.31
12	2.80	11.94	229.3	2.93	34.54	4.10	12.47	285.4	4.85	27.91
13	4.24	77.52	435.7	4.12	15.55	4.00	23.44	782.8	19.26	10.66
14	1.43	7.73	218.9	2.89	37.67	2.94	7.89	318.9	5.49	26.06
15	.35	7.23	242.1	.48	34.87	1.26	7.14	376.0	1.06	22.69
16	2.75	105.65	399.3	.36	15.46	4.08	64.27	514.9	.37	14.11
17	4.05	69.66	460.3	3.98	15.23	4.21	23.68	743.9	15.64	11.17
18	.89	8.48	228.5	1.74	36.27	1.99	9.08	338.2	1.93	24.74
19	1.31	20.37	413.7	3.02	19.73	3.42	19.50	604.5	11.25	13.74
20	1.43	12.09	260.8	1.75	31.22	2.62	13.61	357.3	2.44	22.93
21	6.72	95.92	406.3	3.51	15.35	6.23	152.59	740.1	9.30	8.88
22	2.57	15.75	250.2	2.72	31.36	4.04	10.79	340.6	6.54	23.96
23	3.25	79.95	533.2	3.08	13.26	6.49	39.57	738.7	9.11	10.80
24	1.25	23.66	359.5	3.00	22.15	2.53	5.85	518.7	12.08	16.56
25	.62	8.32	267.6	3.82	31.40	2.11	4.80	393.5	8.16	21.77
26	.78	14.26	395.6	.96	21.11	1.95	8.81	522.7	.99	16.35
27	2.16	41.50	395.9	4.27	18.97	3.16	13.13	653.5	17.12	12.97
28	2.37	14.12	257.1	3.09	30.94	3.19	10.74	375.2	6.24	22.06
29	2.44	69.33	424.5	1.50	16.40	4.11	38.86	578.0	4.14	13.61
30	1.46	25.39	353.4	2.95	22.30	2.51	8.58	525.4	10.23	16.23
31	.67	9.37	309.5	3.99	27.19	2.09	5.98	423.9	10.06	20.17
32	.92	14.08	400.2	.85	20.87	2.01	12.30	466.7	.61	18.03
BAG (CALC.)	2.11	32.63	331.9	3.13	22.76	3.12	19.40	510.3	10.20	16.12
BAG (ACT.)	2.15	29.75	328.3	3.30	23.24	3.34	20.18	510.3	10.28	16.06
33	.43	14.08	42.0	.05	135.51	.81	12.74	71.1	.05	94.76
34	3.55	132.56	575.8	.57	11.16	7.96	98.17	901.6	.53	8.21
35	.32	2.99	648.0	.88	13.58	3.64	46.19	462.2	.28	16.25
36	.28	1.68	368.4	.59	23.86	1.99	14.37	458.9	.37	18.20
37	.41	4.52	288.2	.96	29.92	1.22	2.58	367.4	.89	23.65
38	.73	2.78	236.8	2.93	36.46	1.16	2.90	403.2	2.85	21.57
39	.87	3.90	288.4	5.77	29.86	2.08	4.45	459.0	11.56	18.78

EMISSION RESULTS IN GRAMS PER MILE (PER MINUTE FOR IDLE)
FUEL ECONOMY IN MILES PER GALLON (PER MINUTE FOR IDLE)

APPENDIX H

LISTING OF MODAL RESULTS ON INDIVIDUAL VEHICLES

ST. LOUIS

	VEH	YEAR	MAKE	MODL	CID	VEH	YEAR	MAKE	MODL	CID
	4093	1974	FORD	PINT	140	4094	1974	FORD	STAW	400
MODE NO.	HC	CO	CO2	NOXC	FUEL ECONOMY	HC	CO	CO2	NOXC	FUEL ECONOMY
1	5.30	149.32	785.5	9.37	8.56	4.67	72.13	1369.8	5.95	5.92
2	3.54	69.10	207.8	.43	27.09	1.77	45.33	518.7	1.03	14.90
3	7.21	234.02	714.8	3.47	8.03	6.42	154.02	1427.5	2.69	5.25
4	2.28	59.29	594.5	8.96	12.77	3.23	58.79	964.6	3.11	8.32
5	2.28	68.45	486.7	6.16	14.76	1.61	12.51	842.0	4.00	10.24
6	1.35	22.73	160.7	1.18	44.23	1.11	12.72	314.3	2.22	26.27
7	3.08	130.08	579.2	5.57	11.19	5.46	228.25	942.3	4.13	6.73
8	1.32	21.56	212.7	1.92	35.39	2.14	9.58	365.5	1.64	22.91
9	2.08	59.51	502.5	7.02	14.73	2.22	24.29	907.7	5.68	9.31
10	4.77	26.69	174.2	1.32	38.38	1.95	21.16	328.2	1.14	24.14
11	2.67	105.17	610.8	7.85	11.31	4.53	160.87	1004.1	5.45	6.98
12	7.44	34.39	167.2	1.64	36.25	3.44	31.35	371.2	1.31	20.57
13	2.96	110.98	591.0	6.22	11.46	3.91	82.60	1029.2	7.15	7.58
14	3.35	24.26	204.2	2.04	35.09	1.65	16.40	404.1	1.38	20.40
15	1.99	48.67	174.5	.42	34.50	1.55	22.12	475.4	1.61	17.23
16	3.73	180.32	252.9	.47	16.19	6.30	150.46	686.0	.74	9.42
17	3.17	97.34	568.9	7.05	12.13	3.54	62.70	1003.5	6.13	7.97
18	3.61	30.10	195.2	1.47	34.95	1.06	24.93	393.2	2.15	20.37
19	2.43	82.35	562.1	5.93	12.69	3.34	67.68	821.4	4.55	9.46
20	5.73	45.63	214.9	1.22	29.13	1.59	32.08	484.1	2.26	16.45
21	2.92	105.21	648.6	8.88	10.78	5.82	235.72	958.8	4.20	6.59
22	6.64	38.01	204.4	1.93	31.12	2.57	24.10	454.5	1.31	17.73
23	3.57	103.74	625.9	7.92	11.09	5.18	117.42	1078.1	3.97	6.94
24	1.69	54.06	426.6	6.16	17.17	2.02	21.09	763.0	4.80	11.06
25	1.19	22.46	270.8	3.71	28.64	2.19	8.82	465.9	2.70	18.23
26	2.81	89.24	281.7	.76	20.60	2.22	22.27	703.6	2.15	11.90
27	2.40	81.22	516.1	6.14	13.63	3.01	63.45	875.9	6.19	9.01
28	5.51	35.57	235.0	2.64	28.79	1.93	26.66	492.8	1.78	16.41
29	4.26	121.47	527.4	5.39	12.13	4.24	87.15	828.9	2.75	9.06
30	1.87	65.64	429.6	5.67	16.48	3.08	62.43	741.4	5.12	10.45
31	1.50	34.24	264.6	3.65	27.46	2.51	10.99	533.0	2.64	15.90
32	3.49	74.06	337.8	.74	19.08	2.00	38.44	534.6	1.84	14.76
BAG (CALC.)	3.33	59.01	372.5	4.23	18.66	2.45	48.08	676.3	3.52	11.68
BAG (ACT.)	3.52	58.31	358.7	4.34	19.23	2.55	49.63	676.4	3.64	11.64
33	1.10	27.84	36.6	.02	105.80	.95	23.47	107.4	.09	60.25
34	11.41	327.98	487.6	.24	8.54	10.76	243.61	1358.6	1.14	5.00
35	3.21	141.08	290.3	.12	17.00	5.30	111.83	701.7	.57	9.93
36	1.98	84.01	279.0	.16	21.27	3.45	70.50	468.2	.39	15.04
37	1.50	29.88	236.0	.98	30.84	1.54	6.20	423.7	1.79	20.25
38	1.18	13.69	283.1	3.19	28.79	1.52	4.26	440.6	6.80	19.63
39	1.19	15.15	337.1	5.66	24.34	1.92	5.46	524.7	4.72	16.45

EMISSION RESULTS IN GRAMS PER MILE (PER MINUTE FOR IDLE)
FUEL ECONOMY IN MILES PER GALLON (PER MINUTE FOR IDLE)

APPENDIX H

LISTING OF MODAL RESULTS ON INDIVIDUAL VEHICLES

ST. LOUIS

	VEH	YEAR	MAKE	MODL	CID	VEH	YEAR	MAKE	MODL	CID
	4095	1974	FORD	STAW	351	4096	1974	MERC	MONT	302
MODE NO.	HC	CO	CO2	NOXC	FUEL ECONOMY	HC	CO	CO2	NOXC	FUEL ECONOMY
1	7.95	103.47	1003.8	12.38	7.45	27.49	169.79	967.8	11.32	6.71
2	4.46	57.11	360.4	.80	19.12	11.94	68.26	245.3	.98	22.73
3	8.47	245.70	1128.1	2.00	5.76	54.58	395.47	804.7	2.37	5.55
4	3.99	62.26	761.1	5.81	10.18	7.22	86.17	727.7	7.06	10.02
5	2.73	15.71	664.6	10.46	12.72	3.52	22.72	569.1	8.54	14.41
6	3.05	13.11	315.7	2.07	25.66	4.12	14.05	229.6	2.39	33.52
7	3.23	36.38	917.4	16.10	9.01	3.98	54.35	834.4	13.91	9.52
8	2.96	19.56	360.9	6.76	22.13	1.97	16.49	277.6	6.10	28.65
9	2.33	18.15	709.3	14.49	11.91	3.23	13.80	692.8	12.27	12.25
10	5.00	24.16	274.9	4.34	27.00	12.58	26.36	219.1	3.44	29.54
11	3.26	33.12	913.0	19.29	9.10	6.10	89.48	815.1	13.43	9.10
12	8.34	39.81	211.2	2.61	29.56	12.64	29.72	255.0	4.48	25.96
13	3.21	38.79	884.4	18.68	9.29	7.15	46.29	842.8	20.15	9.46
14	3.85	16.65	340.9	5.47	23.40	6.46	21.21	285.6	4.58	26.14
15	1.57	20.16	391.3	.73	20.74	3.81	48.56	328.3	1.09	21.30
16	6.22	212.67	321.2	.16	13.15	20.69	256.42	409.3	1.30	10.11
17	4.19	57.12	834.4	14.70	9.47	11.19	82.25	827.6	14.82	8.94
18	4.03	11.66	419.5	2.39	19.70	5.62	25.05	293.4	2.18	25.31
19	3.44	49.24	722.9	11.15	10.94	5.40	59.59	727.5	9.75	10.59
20	5.35	29.86	376.1	2.35	20.17	9.99	36.79	303.2	2.40	22.60
21	5.64	206.03	922.5	9.17	7.02	8.51	110.91	860.9	12.51	8.36
22	6.22	31.56	368.1	5.42	20.29	11.26	29.71	284.8	3.80	24.17
23	5.60	113.03	890.5	8.81	8.17	17.07	161.08	789.3	6.92	8.09
24	2.25	18.41	692.7	12.40	12.18	3.59	22.96	615.6	9.93	13.39
25	3.38	18.66	414.8	6.14	19.51	2.86	20.27	309.7	5.34	25.31
26	3.52	26.52	609.5	1.06	13.40	8.90	56.64	411.8	2.13	16.78
27	3.16	35.39	763.5	15.66	10.70	6.65	40.80	740.5	15.42	10.75
28	5.46	33.08	394.7	4.67	19.13	12.51	31.66	281.5	4.36	23.93
29	4.51	92.72	626.8	7.64	11.28	14.52	145.00	640.7	4.84	9.70
30	2.13	16.52	655.9	12.51	12.89	3.75	25.00	654.1	9.77	12.58
31	3.34	20.02	447.1	6.71	18.15	3.78	24.65	350.3	5.17	22.13
32	3.54	32.29	470.0	1.33	16.68	15.80	65.35	415.4	1.31	15.62
BAG (CALC.)	3.68	40.88	569.3	9.25	13.76	8.88	47.75	508.9	8.87	14.50
BAG (ACT.)	3.92	43.37	562.5	9.47	13.80	9.24	49.21	498.8	8.87	14.66
33	1.06	28.97	66.6	.04	76.85	7.48	34.00	28.6	0.00	83.93
34	14.16	347.51	821.7	.48	6.28	49.16	467.04	524.6	.25	6.27
35	4.68	121.38	726.2	.49	9.53	11.19	231.67	330.0	.12	12.17
36	3.59	109.94	371.2	.24	15.98	6.89	155.55	280.4	.17	16.24
37	1.44	7.13	464.0	1.07	18.50	2.57	19.72	341.2	.96	23.33
38	1.41	6.72	467.9	3.82	18.38	2.05	7.13	373.4	3.14	22.70
39	2.19	28.13	499.7	10.87	16.11	2.38	12.48	395.8	6.24	20.98

EMISSION RESULTS IN GRAMS PER MILE (PER MINUTE FOR IDLE)
FUEL ECONOMY IN MILES PER GALLON (PER MINUTE FOR IDLE)

APPENDIX H

LISTING OF MODAL RESULTS ON INDIVIDUAL VEHICLES

ST. LOUIS

	VEH	YEAR	MAKE	MODL	CID	VEH	YEAR	MAKE	MODL	CID
	4097	1974	OLDS	CUTL	350	4098	1974	OLDS	STAW	455
MODE NO.	HC	CO	CO2	NOXC	FUEL ECONOMY	HC	CO	CO2	NOXC	FUEL ECONOMY
1	12.91	24.89	1280.8	12.26	6.52	5.67	16.34	1857.5	13.59	4.67
2	1.33	14.49	460.2	.54	18.22	1.76	2.92	535.2	.38	16.27
3	4.67	39.27	1519.2	5.84	5.56	8.10	58.40	1935.8	5.80	4.32
4	3.01	11.20	898.2	6.68	9.59	1.88	4.09	1218.9	4.16	7.21
5	2.45	6.31	678.0	10.27	12.76	.74	2.58	977.6	7.54	9.02
6	2.17	5.71	289.0	1.21	29.12	2.58	2.02	282.1	.62	30.24
7	5.91	6.08	802.4	6.72	10.68	3.50	99.99	1206.2	13.70	6.46
8	1.76	3.86	338.1	2.25	25.38	2.26	3.20	248.0	1.53	34.11
9	2.21	15.24	658.2	11.41	12.88	1.11	4.13	958.8	13.06	9.16
10	2.82	5.90	323.1	1.42	26.00	3.82	3.11	307.6	1.08	27.35
11	3.43	36.27	970.5	12.76	8.55	2.25	8.39	1183.5	21.30	7.37
12	4.50	12.30	325.1	1.40	24.74	4.75	4.24	304.0	1.29	27.25
13	6.14	31.40	961.6	12.46	8.61	2.54	10.45	1181.9	18.91	7.36
14	3.65	4.87	342.1	1.97	24.56	2.73	2.50	351.9	1.70	24.35
15	1.24	5.02	454.9	.58	19.02	1.02	2.91	443.8	.54	19.65
16	3.32	30.19	1059.1	1.01	7.94	2.54	5.51	1146.3	.65	7.63
17	3.14	17.62	1006.4	11.48	8.50	2.57	8.37	1271.4	13.24	6.87
18	1.86	5.63	365.6	1.76	23.33	2.23	1.92	371.5	.96	23.26
19	2.52	9.11	891.7	11.77	9.71	1.40	2.91	1179.0	10.35	7.47
20	2.99	12.22	403.3	1.68	20.55	3.87	2.93	406.9	.96	20.94
21	5.13	144.94	920.4	10.00	7.62	4.12	86.43	1324.4	15.74	6.02
22	3.65	8.21	378.7	2.12	22.01	4.22	3.09	386.9	2.02	21.90
23	3.72	21.33	1113.4	9.41	7.66	3.09	11.47	1455.9	8.45	5.98
24	2.16	7.76	558.2	9.04	15.38	1.03	3.49	893.4	10.04	9.84
25	2.56	4.89	482.3	2.90	17.82	1.50	3.44	425.6	2.72	20.37
26	2.48	13.08	659.1	1.69	12.91	1.64	5.83	706.7	1.02	12.31
27	2.76	11.87	817.0	10.83	10.51	1.64	5.44	1005.1	13.34	8.71
28	3.74	9.63	453.0	3.02	18.49	3.48	5.00	450.2	2.21	18.92
29	12.75	20.13	756.2	7.04	10.72	2.31	11.59	1115.5	5.91	7.78
30	2.50	12.91	596.2	9.74	14.21	1.08	7.04	943.0	10.03	9.27
31	2.22	5.67	503.5	3.45	17.09	.73	4.56	397.3	3.47	21.82
32	1.93	9.96	614.7	.82	13.95	1.64	11.84	627.1	.92	13.64
BAG (CALC.)	2.89	21.49	613.1	5.72	13.53	2.22	9.60	729.7	6.71	11.81
BAG (ACT.)	3.09	22.01	609.6	5.82	13.57	2.42	10.67	712.8	7.08	12.04
33	.48	6.22	115.0	.08	70.31	.49	2.57	142.0	.10	60.11
34	7.29	84.88	1380.5	.92	5.77	5.97	6.94	1684.8	.96	5.18
35	3.63	36.75	688.6	.45	11.71	3.69	9.15	851.9	.49	10.11
36	1.03	5.74	642.6	.53	13.55	2.85	4.23	712.6	.41	12.19
37	1.41	2.35	395.2	1.03	22.00	.64	2.52	519.1	.73	16.90
38	1.26	3.06	421.0	3.40	20.65	.45	2.72	539.3	1.73	16.29
39	1.22	4.06	508.9	6.26	17.10	.39	3.48	633.6	4.98	13.86

EMISSION RESULTS IN GRAMS PER MILE (PER MINUTE FOR IDLE)
FUEL ECONOMY IN MILES PER GALLON (PER MINUTE FOR IDLE)

APPENDIX H

LISTING OF MODAL RESULTS ON INDIVIDUAL VEHICLES

ST. LOUIS

	VEH	YEAR	MAKE	MODL	CID	VEH	YEAR	MAKE	MODL	CID
	4099	1974	PLYM	SCAM	318	4100	1974	PLYM	DUST	225
MODE NO.	HC	CO	CO2	NOXC	FUEL ECONOMY	HC	CO	CO2	NOXC	FUEL ECONOMY
1	5.54	70.01	1102.0	8.49	7.22	5.31	23.05	959.5	3.78	8.77
2	2.76	58.60	338.4	.83	20.21	2.33	1.69	278.6	.79	30.75
3	7.33	147.76	1157.9	1.26	6.28	4.37	14.72	1076.9	.73	7.97
4	3.05	27.53	762.8	4.09	10.88	2.33	7.74	652.8	1.59	13.20
5	3.10	11.91	571.1	8.70	14.80	2.16	9.26	451.1	3.31	18.78
6	1.96	17.90	217.8	3.99	35.20	2.10	1.56	226.3	1.21	37.71
7	3.41	23.49	768.4	11.48	10.87	2.45	30.73	746.8	7.40	11.06
8	2.72	11.45	281.6	6.07	28.80	2.03	2.24	365.2	1.30	23.66
9	2.35	7.97	597.7	11.45	14.37	2.08	28.39	562.8	3.70	14.46
10	2.57	23.64	262.0	4.78	28.88	3.78	3.22	238.3	.75	34.76
11	3.27	20.39	834.4	13.53	10.12	2.60	38.18	725.2	9.83	11.19
12	3.77	33.22	272.2	5.27	26.38	4.51	5.53	274.6	1.20	29.82
13	3.51	23.19	820.9	13.61	10.22	2.57	24.89	692.9	9.20	11.99
14	2.68	20.57	314.3	6.59	25.00	2.78	3.44	294.9	.95	28.71
15	2.05	35.17	233.6	.87	30.05	1.05	.94	283.7	.57	30.77
16	5.44	188.53	547.7	.65	10.31	2.15	1.96	567.5	.67	15.37
17	3.63	31.77	807.3	9.82	10.22	2.47	14.12	712.2	5.70	11.96
18	2.45	26.26	290.3	3.85	26.16	2.47	2.51	271.2	2.05	31.36
19	3.18	22.84	711.4	7.11	11.72	1.96	10.71	555.9	3.52	15.33
20	2.72	28.12	326.0	3.71	23.43	3.95	4.25	284.3	1.59	29.25
21	4.12	40.57	903.0	13.21	9.06	3.15	61.60	761.8	8.87	10.22
22	3.06	28.01	316.0	6.08	24.01	3.78	4.61	274.3	1.09	30.24
23	4.51	59.07	852.1	5.82	9.25	3.81	14.96	659.6	2.00	12.77
24	2.62	11.56	565.8	9.43	14.99	1.75	14.97	464.3	3.78	17.99
25	2.81	16.01	343.4	7.28	23.51	1.89	4.33	374.0	1.20	22.95
26	3.01	37.50	432.0	1.34	17.73	2.21	2.40	467.7	1.31	18.55
27	3.06	20.70	687.5	12.06	12.16	2.04	10.45	590.4	6.92	14.47
28	2.80	25.45	353.3	5.60	22.07	3.86	4.82	311.0	1.20	26.83
29	3.97	68.35	636.4	3.97	11.73	3.08	9.25	479.4	1.11	17.62
30	2.77	10.81	575.7	10.28	14.76	2.10	30.31	419.5	2.74	18.73
31	2.90	18.44	360.3	8.00	22.28	1.83	4.45	396.0	1.24	21.71
32	2.94	42.03	421.2	1.00	17.87	2.22	9.65	414.6	2.32	20.32
BAG (CALC.)	2.90	26.39	516.1	8.15	15.66	2.51	12.79	470.9	3.73	17.79
BAG (ACT.)	2.82	27.89	516.1	8.19	15.60	2.55	14.12	474.3	4.05	17.59
33	.48	6.22	115.0	.08	70.31	.58	1.01	62.3	.04	134.98
34	7.29	84.88	1380.5	.92	5.77	8.01	6.93	751.8	.53	11.26
35	4.89	156.01	461.1	.38	12.30	1.25	3.10	615.1	.40	14.22
36	3.38	90.86	413.9	.34	15.64	.98	2.03	410.6	.36	21.29
37	2.26	31.00	295.3	.87	25.27	1.29	1.50	277.9	1.01	31.21
38	1.64	4.70	378.0	5.81	22.72	1.17	1.83	301.1	3.02	28.85
39	2.04	10.32	464.6	10.32	18.21	1.78	3.26	365.1	2.16	23.61

EMISSION RESULTS IN GRAMS PER MILE (PER MINUTE FOR IDLE)
FUEL ECONOMY IN MILES PER GALLON (PER MINUTE FOR IDLE)

APPENDIX H

LISTING OF MODAL RESULTS ON INDIVIDUAL VEHICLES

ST. LOUIS

	VEH	YEAR	MAKE	MODL	CID	VEH	YEAR	MAKE	MODL	CID
	4101	1974	PONT	GRNP	400	4102	1974	DATS	710	119
MODE NO.	HC	CO	CO2	NOXC	FUEL ECONOMY	HC	CO	CO2	NOXC	FUEL ECONOMY
1	3.29	17.98	1481.2	7.16	5.84	4.82	97.93	705.3	7.64	10.15
2	13.80	4.40	516.8	.29	15.64	1.85	11.09	194.5	.65	40.75
3	5.27	11.17	1751.8	4.14	4.97	4.71	103.16	665.9	3.48	10.53
4	1.36	3.37	1089.7	2.04	8.07	2.38	34.78	486.7	4.88	16.17
5	2.01	5.61	868.8	2.79	10.04	1.82	23.94	479.4	5.50	16.98
6	4.86	4.37	323.1	.64	25.70	.67	8.41	161.3	.83	50.25
7	3.72	50.14	1005.4	6.73	8.10	4.45	123.54	513.5	4.20	12.30
8	2.88	2.02	336.8	1.64	25.42	.76	6.78	186.6	1.46	44.44
9	.82	4.73	806.3	4.35	10.87	1.94	26.59	440.7	6.04	18.16
10	9.14	6.08	318.5	.90	24.86	2.74	9.11	143.3	1.05	53.37
11	1.79	14.18	1052.3	8.49	8.22	3.90	102.31	568.1	5.72	11.97
12	11.21	4.70	312.5	1.18	24.97	3.66	9.98	154.1	.93	48.94
13	1.79	12.88	1047.3	7.78	8.27	3.90	85.93	565.5	6.01	12.45
14	6.37	3.64	330.9	.93	24.88	1.65	7.06	195.1	1.68	41.97
15	5.76	8.44	446.4	.21	18.57	1.51	16.66	210.0	.84	36.83
16	4.01	12.69	1268.6	.47	6.82	2.34	32.41	312.5	.47	23.93
17	1.75	7.14	1037.0	6.30	8.42	3.07	55.84	579.2	6.73	13.12
18	8.93	4.08	348.5	.58	23.16	1.25	10.82	188.5	1.04	42.36
19	2.10	13.86	946.7	4.83	9.10	3.00	49.35	511.5	4.83	14.83
20	12.11	7.20	441.8	.64	18.06	2.40	12.80	196.8	1.18	39.53
21	3.42	82.08	1079.0	7.40	7.28	5.96	169.93	582.2	4.18	10.22
22	10.92	6.71	373.2	1.14	21.21	3.36	10.74	188.0	1.93	41.17
23	2.90	12.07	1226.8	4.65	7.07	3.93	69.26	608.8	5.34	12.16
24	1.66	6.68	783.5	3.70	11.10	2.06	32.79	446.3	4.96	17.60
25	3.34	7.63	391.4	1.18	21.44	.81	9.66	235.2	2.18	35.08
26	7.99	17.49	740.2	.38	11.19	1.80	20.47	326.0	1.06	24.39
27	1.39	9.31	900.6	5.54	9.65	2.56	38.38	512.1	6.54	15.29
28	10.99	8.98	383.3	1.14	20.53	2.60	12.97	235.8	1.75	33.56
29	2.38	13.94	1075.6	2.80	8.03	2.75	37.55	477.0	5.26	16.29
30	2.19	9.10	804.0	5.45	10.76	2.36	45.79	449.6	5.00	16.78
31	2.17	6.15	433.5	1.50	19.72	.81	9.69	295.4	2.75	28.34
32	10.00	13.42	693.7	.37	11.89	2.33	12.66	310.7	1.26	26.26
BAG (CALC.)	4.69	10.23	666.3	3.00	12.73	2.81	34.16	353.2	3.48	21.35
BAG (ACT.)	4.88	9.51	656.0	3.11	12.93	2.93	33.46	332.5	3.55	22.51
33	.44	.31	130.2	.17	67.20	.37	7.04	27.1	.02	225.74
34	4.02	6.18	1614.4	1.29	5.42	4.84	69.51	490.4	.24	14.43
35	2.04	3.75	829.8	.52	10.54	2.41	26.41	325.8	.36	23.67
36	.79	3.35	648.0	.42	13.53	1.64	11.23	271.8	.40	30.13
37	3.63	5.64	532.8	.29	16.04	1.05	6.41	256.7	1.08	32.86
38	1.15	3.25	494.8	.97	17.63	1.18	9.46	276.4	2.08	30.08
39	.37	3.21	593.8	2.20	14.79	1.12	10.91	327.3	3.92	25.50

EMISSION RESULTS IN GRAMS PER MILE (PER MINUTE FOR IDLE)
FUEL ECONOMY IN MILES PER GALLON (PER MINUTE FOR IDLE)

APPENDIX H

LISTING OF MODAL RESULTS ON INDIVIDUAL VEHICLES

ST. LOUIS

	VEH	YEAR	MAKE	MODL	CID	VEH	YEAR	MAKE	MODL	CID
	4103	1974	TOYO	CORO	97	4104	1974	TOYO	STAW	120
MODE NO.	HC	CO	CO2	NOXC	FUEL ECONOMY	HC	CO	CO2	NOXC	FUEL ECONOMY
1	4.30	80.94	500.6	3.14	13.84	4.70	105.80	656.1	5.22	10.60
2	1.37	33.23	299.6	.85	24.92	1.46	67.84	306.0	.52	21.27
3	6.23	149.28	540.0	.78	11.17	6.17	161.56	538.2	1.44	10.93
4	2.30	43.14	422.5	1.91	17.84	2.11	48.22	523.5	3.90	14.65
5	1.27	23.20	343.9	2.75	23.09	1.02	17.10	436.7	6.04	19.01
6	.85	10.83	150.0	2.09	52.29	.49	12.82	227.2	2.25	35.66
7	2.32	60.26	358.3	3.69	19.28	2.06	57.66	527.3	7.34	14.21
8	.74	11.69	177.8	4.11	44.71	.55	8.57	225.3	4.65	36.90
9	1.29	11.99	309.8	7.14	26.67	.87	13.61	461.7	9.05	18.27
10	.62	6.82	173.5	2.88	47.66	.66	19.56	205.2	3.09	37.29
11	2.07	50.82	383.4	6.47	18.89	2.37	77.13	515.6	7.91	13.78
12	.83	7.75	203.8	3.53	40.60	.98	29.11	241.7	3.64	30.55
13	2.25	37.72	398.6	6.55	19.09	2.58	60.43	517.9	7.82	14.29
14	.62	6.92	182.6	3.82	45.42	.79	17.60	224.9	3.99	34.80
15	.99	10.72	225.9	.92	36.10	1.55	47.93	250.9	.38	26.80
16	2.17	51.78	656.8	1.09	11.91	4.17	188.77	564.6	.74	10.15
17	2.10	32.47	425.3	5.43	18.38	3.31	74.41	498.0	5.09	14.19
18	.71	7.60	220.1	2.36	37.89	1.05	39.10	219.5	1.53	31.22
19	1.18	18.24	365.5	3.53	22.31	2.15	53.08	465.0	5.08	15.98
20	.91	10.97	264.6	2.87	31.17	1.32	49.80	259.1	1.94	25.98
21	3.00	99.78	383.1	3.75	16.15	3.47	112.64	542.7	6.22	12.15
22	.80	8.14	224.6	4.07	37.00	1.30	36.75	244.9	4.41	28.93
23	2.26	28.96	497.2	3.21	16.14	4.67	95.60	462.6	3.85	14.14
24	1.12	16.02	310.7	4.50	26.15	1.30	29.76	422.3	5.91	18.76
25	.71	7.12	198.7	5.08	41.83	.95	16.59	278.1	6.11	28.89
26	1.45	24.00	342.2	1.24	23.08	2.01	87.22	348.9	.82	18.03
27	1.54	18.24	347.3	6.65	23.31	1.99	42.79	445.8	6.98	17.09
28	.73	7.98	231.6	4.15	36.02	1.30	39.40	283.3	4.66	25.40
29	1.98	28.86	389.1	2.32	20.14	3.23	66.32	408.0	2.54	16.99
30	1.29	18.35	301.4	3.92	26.55	1.85	52.52	393.4	4.91	18.42
31	.70	6.76	234.5	5.97	35.89	1.11	17.55	274.2	6.68	29.07
32	1.30	14.74	297.3	1.04	27.34	1.66	124.52	275.6	.71	18.62
BAG (CALC.)	1.30	20.24	287.9	4.80	27.40	1.50	40.63	350.7	5.51	21.17
BAG (ACT.)	1.34	21.12	288.0	4.97	27.28	1.65	41.05	347.2	5.55	21.29
33	.39	10.85	25.9	.02	201.07	.79	12.86	17.9	0.00	218.52
34	4.64	117.18	501.1	.29	12.68	6.27	150.42	334.8	.28	15.02
35	3.18	75.07	512.3	.87	13.86	2.73	79.52	227.3	.14	24.59
36	2.17	42.65	318.0	.68	22.65	2.12	41.43	341.1	1.11	21.49
37	1.08	20.41	250.6	1.01	31.03	.80	9.52	262.3	1.02	31.72
38	1.19	14.11	207.2	3.26	38.08	.51	4.38	301.2	2.76	28.65
39	1.15	12.35	257.7	6.20	31.62	.70	4.26	342.0	7.06	25.29

EMISSION RESULTS IN GRAMS PER MILE (PER MINUTE FOR IDLE)
FUEL ECONOMY IN MILES PER GALLON (PER MINUTE FOR IDLE)

APPENDIX H

LISTING OF MODAL RESULTS ON INDIVIDUAL VEHICLES

ST. LOUIS

	VEH	YEAR	MAKE	MODL	CID	VEH	YEAR	MAKE	MODL	CID
	4105	1974	VOLK	SEDA	97	4106	1974	VOLK	SEDA	97
MODE NO.	HC	CO	CO2	NOXC	FUEL ECONOMY	HC	CO	CO2	NOXC	FUEL ECONOMY
1	6.70	77.63	537.3	4.50	13.04	6.29	52.17	531.2	2.95	14.02
2	1.05	12.01	196.2	2.26	40.63	.94	3.90	216.6	1.64	39.32
3	4.87	143.21	574.2	0.00	10.89	3.14	27.07	686.1	.45	12.02
4	1.60	16.34	371.5	2.20	22.06	1.31	4.30	371.5	1.30	23.21
5	1.94	9.03	365.3	4.95	23.02	1.73	5.01	320.4	4.50	26.59
6	.52	3.39	163.1	2.82	52.20	.59	1.78	148.3	2.30	58.03
7	2.99	13.88	352.1	6.28	23.15	.99	12.47	310.3	5.22	26.65
8	.77	11.53	140.2	3.18	55.20	.73	8.62	164.4	4.54	49.24
9	1.07	6.16	360.6	6.62	23.75	.93	3.73	341.3	6.53	25.35
10	1.05	10.11	153.6	2.48	51.38	1.19	7.42	148.0	3.52	54.29
11	3.19	23.44	397.4	6.95	19.97	4.13	37.59	382.1	6.54	19.54
12	1.04	12.75	166.8	3.14	46.69	1.27	9.07	160.2	4.60	49.74
13	4.48	32.69	396.5	6.71	19.21	5.11	35.83	378.5	6.52	19.68
14	.81	11.89	161.3	3.27	48.63	.88	7.21	185.4	4.43	44.49
15	.72	5.04	282.4	2.24	30.33	.87	2.13	160.8	.88	53.18
16	1.97	36.65	550.6	1.67	14.44	1.96	14.58	290.1	0.00	27.80
17	4.47	32.92	368.4	5.12	20.44	5.77	28.10	368.6	5.46	20.59
18	.87	4.84	169.2	3.58	49.41	.80	2.71	172.9	3.14	49.39
19	2.02	20.95	358.0	2.85	22.34	2.70	11.49	354.4	3.93	23.30
20	1.17	5.88	260.2	3.72	32.50	.96	5.40	196.4	3.04	42.69
21	6.31	35.36	330.6	5.09	21.85	6.89	38.45	354.4	5.22	20.32
22	1.62	15.48	203.2	3.31	38.15	1.62	12.22	189.9	4.56	41.42
23	4.63	67.05	402.0	2.00	17.00	4.30	31.07	402.0	2.47	19.11
24	1.71	7.74	322.3	4.94	26.11	1.70	10.88	317.4	5.96	26.11
25	.94	8.53	265.0	4.54	31.54	.94	6.51	219.7	7.29	38.11
26	1.96	10.57	352.8	2.80	23.63	1.58	3.84	282.4	2.31	30.25
27	3.51	26.58	338.6	6.05	22.67	3.97	32.68	353.6	6.33	21.26
28	1.55	11.95	209.8	3.76	38.01	1.42	10.81	213.2	5.85	37.81
29	3.34	57.85	331.2	.80	20.51	4.30	31.42	420.4	1.85	18.36
30	1.71	6.09	293.6	4.45	28.76	2.46	11.07	313.9	5.80	26.17
31	1.02	18.45	268.5	4.27	29.51	1.30	13.21	215.4	7.00	36.94
32	1.97	7.99	309.6	2.59	27.03	1.97	3.83	234.0	2.08	36.03
BAG (CALC.)	2.39	23.87	276.7	4.48	27.59	2.44	21.43	266.6	4.78	28.81
BAG (ACT.)	2.53	24.83	269.9	4.51	28.00	2.48	22.16	270.0	5.07	28.38
33	.34	8.20	33.9	.02	185.37	.38	3.35	39.6	.02	192.79
34	2.79	42.32	542.9	.47	14.36	3.42	4.46	566.1	.27	15.20
35	1.43	11.55	509.5	1.56	16.68	1.11	3.45	485.6	.81	17.95
36	1.02	10.30	294.7	.88	28.25	.74	1.87	293.9	.54	29.66
37	.64	1.70	230.2	2.66	37.78	.64	1.36	214.9	1.54	40.52
38	.63	2.04	221.4	3.39	39.17	.60	1.18	206.3	3.14	42.26
39	.79	5.72	266.7	5.45	31.90	.92	2.88	248.1	6.86	34.73

EMISSION RESULTS IN GRAMS PER MILE (PER MINUTE FOR IDLE)
FUEL ECONOMY IN MILES PER GALLON (PER MINUTE FOR IDLE)

APPENDIX H

LISTING OF MODAL RESULTS ON INDIVIDUAL VEHICLES

ST. LOUIS

	VEH	YEAR	MAKE	MODL	CID	VEH	YEAR	MAKE	MODL	CID
	3107	1973	AMC	GREM	232	3108	1973	BUIC	CNTR	455
MODE NO.	HC	CO	CO2	NOXC	FUEL ECONOMY	HC	CO	CO2	NOXC	FUEL ECONOMY
1	5.97	100.09	617.0	4.09	11.19	4.35	75.65	1426.9	6.46	5.69
2	2.61	26.68	334.1	.83	23.10	.85	22.53	530.9	.60	15.60
3	7.22	142.17	679.1	3.32	9.59	4.42	49.85	1610.3	3.47	5.21
4	1.55	26.53	674.6	2.71	12.31	2.56	31.42	971.1	3.91	8.63
5	1.18	13.50	404.2	3.32	20.68	2.01	40.95	791.3	3.83	10.30
6	.40	2.83	319.5	.86	27.29	.77	6.48	347.5	1.19	24.64
7	3.20	80.97	397.2	2.19	16.60	2.86	59.86	985.8	9.07	8.15
8	.32	1.94	366.2	1.70	23.97	3.27	7.03	313.4	1.78	26.51
9	.71	2.59	467.0	4.91	18.75	1.46	25.22	806.1	6.93	10.44
10	3.03	9.82	258.7	1.12	31.28	2.39	5.68	318.9	1.18	26.46
11	4.61	133.45	429.8	2.91	13.57	2.45	44.91	993.4	10.46	8.28
12	3.32	8.63	319.1	1.44	25.86	3.91	7.43	318.0	1.45	25.94
13	4.46	134.25	464.0	2.96	12.88	2.45	42.73	986.0	10.00	8.37
14	1.05	3.97	317.5	1.52	27.13	2.60	6.80	387.3	1.87	21.85
15	2.10	15.67	353.2	.76	23.08	.60	16.99	474.1	.70	17.66
16	5.96	147.24	657.6	.48	9.78	2.14	48.89	1021.9	.81	8.03
17	4.90	115.47	466.4	2.96	13.38	2.87	55.04	992.6	7.02	8.16
18	1.27	6.60	333.7	.92	25.50	.66	13.04	415.0	1.32	20.29
19	2.55	37.89	412.8	2.95	18.47	2.33	40.41	810.3	5.42	10.07
20	2.78	13.90	400.1	1.17	20.61	.82	14.20	526.0	1.47	16.11
21	5.86	132.47	390.2	1.87	14.39	3.22	78.19	1020.3	9.65	7.69
22	3.32	11.21	342.2	1.59	23.97	2.32	11.45	420.2	1.85	19.92
23	4.91	63.03	565.5	3.96	13.05	2.92	47.09	1089.5	5.04	7.57
24	1.46	14.27	402.8	4.22	20.65	1.60	34.99	710.0	4.98	11.53
25	.46	3.01	391.9	2.04	22.29	3.11	13.14	460.1	2.34	18.09
26	2.53	10.69	611.2	1.49	13.95	1.09	31.76	750.0	1.18	11.05
27	3.21	82.32	422.2	3.69	15.80	1.96	39.39	781.7	6.61	10.44
28	3.02	11.12	362.3	1.59	22.80	2.71	11.57	476.3	2.00	17.64
29	3.63	59.05	461.9	2.54	15.67	2.42	34.10	897.8	3.33	9.25
30	2.32	47.41	357.2	2.53	20.22	1.74	44.67	709.2	4.90	11.31
31	.40	2.14	441.0	2.07	19.92	2.20	11.64	509.4	2.66	16.60
32	2.75	12.57	471.3	1.22	17.76	1.64	22.91	615.1	1.30	13.52
BAG (CALC.)	2.76	42.10	407.9	2.51	18.38	1.79	24.91	643.4	4.28	12.90
BAG (ACT.)	2.92	43.37	407.9	2.55	18.29	1.81	23.30	636.7	4.43	13.07
33	.65	12.34	42.0	.02	139.86	.41	3.82	131.1	.12	64.12
34	6.76	172.98	596.4	.49	9.98	4.76	37.67	1553.4	1.50	5.45
35	4.69	127.92	684.6	.62	9.86	2.31	15.92	788.1	.75	10.82
36	.56	7.64	826.6	1.48	10.56	1.09	14.00	591.4	.49	14.39
37	.62	3.00	348.2	.94	25.01	.79	19.72	430.0	.66	19.15
38	.16	1.33	383.2	1.28	23.01	.59	5.66	522.9	2.43	16.63
39	.13	1.38	412.4	2.62	21.39	.47	7.71	574.2	4.06	15.10

EMISSION RESULTS IN GRAMS PER MILE (PER MINUTE FOR IDLE)
FUEL ECONOMY IN MILES PER GALLON (PER MINUTE FOR IDLE)

APPENDIX H

LISTING OF MODAL RESULTS ON INDIVIDUAL VEHICLES

ST. LOUIS

	VEH	YEAR	MAKE	MODL	CID	VEH	YEAR	MAKE	MODL	CID
	3109	1973	BUIC	CNTY	350	3110	1973	CADI	DEVI	472
MODE NO.	HC	CO	CO2	NOXC	FUEL ECONOMY	HC	CO	CO2	NOXC	FUEL ECONOMY
1	2.73	66.54	1215.3	7.01	6.68	3.86	91.96	1291.9	4.19	6.13
2	.49	33.43	509.0	.32	15.76	.87	38.75	753.5	.67	10.86
3	4.42	139.18	1451.3	1.62	5.27	3.63	92.03	1600.6	1.38	5.05
4	1.20	28.31	858.0	2.19	9.79	1.80	35.86	933.2	2.21	8.92
5	.81	6.97	744.8	4.42	11.70	1.34	35.10	784.5	2.63	10.52
6	.46	5.38	339.0	.88	25.44	.18	7.32	487.3	1.05	17.77
7	2.48	125.95	892.0	4.74	8.08	2.36	72.36	932.5	6.36	8.42
8	1.24	3.87	393.3	1.58	22.01	.18	6.40	513.4	1.92	16.94
9	.52	7.25	755.7	6.59	11.55	.68	31.25	844.7	3.58	9.91
10	.66	6.65	344.4	.96	24.87	.14	8.54	521.0	1.23	16.59
11	.88	29.59	924.8	9.23	9.11	1.71	87.93	1033.3	6.99	7.54
12	1.37	9.45	341.2	.87	24.63	.25	11.61	618.8	1.75	13.91
13	1.04	35.26	928.7	7.75	8.99	1.70	88.48	1011.3	5.79	7.68
14	.86	4.39	369.3	1.39	23.42	.10	7.00	538.5	1.47	16.14
15	.37	15.71	434.7	.35	19.27	.54	31.59	563.1	.48	14.44
16	.55	96.29	1032.1	.17	7.49	2.00	131.21	1383.6	.19	5.56
17	1.38	34.68	935.4	6.20	8.93	2.41	94.10	989.5	5.06	7.75
18	.38	11.48	397.3	.72	21.31	.24	14.13	572.8	1.01	14.90
19	.98	27.08	855.1	4.58	9.85	1.89	61.08	779.2	3.24	10.07
20	.58	13.95	435.0	.65	19.35	.28	16.69	634.2	1.06	13.42
21	2.87	174.84	962.6	4.50	7.12	2.69	104.85	1058.3	8.26	7.21
22	1.16	9.61	410.9	1.38	20.66	.19	13.81	635.7	1.63	13.49
23	2.01	66.32	1055.4	3.54	7.61	2.60	91.49	1123.0	2.96	6.96
24	.57	16.47	626.6	4.81	13.56	1.19	59.10	745.0	3.23	10.55
25	1.32	7.51	435.8	1.92	19.65	.10	10.04	638.0	2.24	13.57
26	.47	37.03	679.5	.58	12.01	.83	50.27	853.3	.61	9.49
27	.92	32.67	765.5	6.45	10.83	1.74	82.92	923.1	5.24	8.38
28	1.09	12.70	457.6	1.45	18.45	.17	16.07	706.2	1.99	12.12
29	2.10	84.68	843.0	2.18	9.03	2.26	91.28	986.0	1.64	7.81
30	.70	30.28	634.8	4.48	12.97	1.43	82.22	746.7	3.33	10.08
31	1.35	9.91	497.4	2.26	17.16	.12	14.46	705.5	2.51	12.18
32	.50	47.91	593.6	.49	13.24	.75	61.81	824.8	.59	9.60
BAG (CALC.)	.88	27.79	626.0	3.39	13.20	.90	40.55	772.8	3.33	10.57
BAG (ACT.)	.94	26.19	615.8	3.70	13.45	.92	39.17	780.0	3.62	10.51
33	.79	29.85	94.8	.04	61.54	.47	17.32	154.7	.09	48.39
34	8.39	330.04	1184.7	.51	5.13	5.18	192.52	1880.3	1.07	4.04
35	.92	59.59	1042.1	.52	7.80	2.42	77.34	959.8	.55	8.15
36	.76	47.25	694.8	.35	11.50	1.21	35.78	704.9	.37	11.60
37	.39	10.22	472.3	.49	18.13	.67	18.95	519.8	.73	16.09
38	.22	5.13	480.0	1.30	18.16	.23	4.84	601.2	1.62	14.56
39	.13	3.84	535.7	3.21	16.37	.12	8.98	680.0	2.60	12.78

EMISSION RESULTS IN GRAMS PER MILE (PER MINUTE FOR IDLE)
FUEL ECONOMY IN MILES PER GALLON (PER MINUTE FOR IDLE)

APPENDIX H

LISTING OF MODAL RESULTS ON INDIVIDUAL VEHICLES

ST. LOUIS

	VEH	YEAR	MAKE	MODL	CID	VEH	YEAR	MAKE	MODL	CID
	3111	1973	CHEV	VEGA	140	3112	1973	CHEV	MONT	350
MODE NO.	HC	CO	CO2	NOXC	FUEL ECONOMY	HC	CO	CO2	NOXC	FUEL ECONOMY
1	9.15	136.94	670.2	2.89	9.71	2.69	51.76	1188.1	6.57	6.95
2	2.19	51.27	270.5	1.93	24.79	.42	22.13	431.3	.36	18.99
3	7.49	237.65	538.8	.74	9.48	2.81	116.46	1274.8	.79	6.05
4	4.00	61.38	421.6	1.10	16.72	1.25	28.79	895.3	2.98	9.40
5	2.49	26.31	302.2	3.27	25.25	.87	15.56	681.8	3.68	12.52
6	1.44	13.91	168.3	2.81	45.57	1.02	4.89	318.0	1.25	26.98
7	15.64	40.05	303.1	3.59	21.35	4.13	236.09	828.2	2.95	7.32
8	3.38	19.58	200.4	3.43	36.69	1.46	14.07	334.8	2.12	24.55
9	1.56	14.67	338.4	4.10	24.22	.74	26.86	773.4	4.54	10.85
10	2.12	19.77	164.4	3.21	43.90	3.21	18.35	293.8	1.44	26.66
11	5.36	58.55	431.6	4.25	16.42	3.03	151.16	839.0	4.51	8.17
12	3.41	19.93	185.9	4.35	38.93	5.34	22.18	320.7	2.03	23.83
13	5.06	65.87	407.4	4.38	16.84	2.92	153.33	805.9	4.84	8.40
14	1.79	15.01	204.9	3.51	37.90	3.20	16.29	370.2	1.80	21.86
15	2.57	46.63	286.9	1.21	24.10	.62	19.31	418.9	.41	19.67
16	6.79	176.33	518.8	.52	10.86	1.68	38.76	967.7	.61	8.58
17	7.65	89.88	412.3	3.16	15.36	1.31	30.24	951.6	7.99	8.85
18	1.33	23.36	193.1	2.43	37.92	3.23	22.45	360.8	1.02	21.84
19	3.90	57.67	368.8	1.80	18.81	1.05	24.44	784.2	4.70	10.75
20	2.62	44.47	197.0	2.11	32.25	3.67	35.20	355.8	1.06	20.99
21	18.91	81.13	379.0	3.78	15.67	5.76	331.55	771.9	1.96	6.77
22	4.74	34.57	199.7	2.77	32.98	4.83	27.79	380.9	1.89	20.18
23	7.16	117.37	516.6	1.66	12.26	1.83	47.82	1013.1	5.16	8.11
24	2.85	43.81	276.0	3.11	25.08	1.26	26.47	652.5	4.86	12.71
25	1.33	16.13	253.5	4.47	31.36	2.80	10.16	427.6	2.39	19.62
26	2.99	83.39	467.6	1.51	14.59	.89	21.19	621.2	.52	13.50
27	4.82	62.07	356.1	3.45	18.93	1.33	32.48	775.3	6.65	10.69
28	2.90	29.43	217.1	3.59	32.56	3.60	14.76	421.2	1.89	19.47
29	5.00	120.42	388.7	.98	14.95	1.36	52.87	843.8	3.01	9.53
30	3.11	45.23	260.9	2.85	25.96	4.54	141.52	610.2	3.33	10.48
31	1.53	17.81	269.5	4.71	29.35	2.24	16.37	426.0	2.37	19.34
32	3.11	66.06	333.0	1.22	19.87	.98	20.26	605.7	.51	13.85
BAG (CALC.)	5.85	47.75	294.5	3.40	22.87	2.20	50.65	587.3	3.23	13.17
BAG (ACT.)	6.02	46.76	287.4	3.36	23.36	2.18	52.25	566.8	3.33	13.53
33	.92	25.91	40.0	.04	106.04	.32	9.41	78.6	.04	94.05
34	8.18	249.66	479.7	.54	9.88	3.48	78.81	1009.7	.46	7.75
35	3.82	68.04	465.5	.52	15.18	1.66	50.51	561.3	.23	13.74
36	2.91	52.24	517.8	.78	14.57	.85	33.80	542.5	.31	14.83
37	1.79	24.70	218.6	1.32	33.74	.39	12.15	423.0	.53	20.02
38	1.37	10.87	206.6	3.00	38.93	.26	3.56	459.9	1.81	19.03
39	1.33	5.38	253.7	6.05	33.32	.17	2.99	558.8	3.46	15.74

EMISSION RESULTS IN GRAMS PER MILE (PER MINUTE FOR IDLE)
FUEL ECONOMY IN MILES PER GALLON (PER MINUTE FOR IDLE)

APPENDIX H

LISTING OF MODAL RESULTS ON INDIVIDUAL VEHICLES

ST. LOUIS

	VEH	YEAR	MAKE	MODL	CID	VEH	YEAR	MAKE	MODL	CID
	3113	1973	CHEV	CAMA	350	3114	1973	CHEV	IMPA	350
MODE NO.	HC	CO	CO2	NOXC	FUEL ECONOMY	HC	CO	CO2	NOXC	FUEL ECONOMY
1	3.96	62.16	952.9	10.47	8.35	3.61	17.89	1187.1	13.34	7.24
2	.84	46.01	385.5	.34	19.28	3.41	9.10	394.7	.68	21.14
3	5.34	164.22	1002.6	2.02	6.95	3.75	41.59	1241.7	2.49	6.73
4	2.57	45.91	646.5	5.43	12.21	1.91	16.96	816.1	6.55	10.46
5	1.77	19.67	584.8	7.26	14.28	1.64	8.90	719.8	9.31	12.01
6	.94	11.43	250.3	1.68	32.72	3.75	5.79	301.2	1.77	27.55
7	2.49	27.21	748.8	13.70	11.10	3.45	70.35	916.5	12.59	8.55
8	1.75	14.49	278.6	3.39	28.92	3.18	3.29	376.8	5.48	22.64
9	1.38	8.66	587.3	9.63	14.66	1.36	5.80	770.8	11.36	11.32
10	1.02	14.00	281.1	2.45	28.97	4.83	3.83	348.2	3.12	24.02
11	1.97	15.79	760.8	16.21	11.21	2.13	18.46	898.6	17.62	9.50
12	2.83	20.89	288.4	2.43	26.88	6.12	5.15	382.4	3.25	21.65
13	2.04	19.59	741.7	14.73	11.39	2.18	19.30	870.4	15.91	9.78
14	1.27	19.16	286.5	2.65	27.68	3.46	3.58	423.6	4.13	20.16
15	.87	34.75	366.7	.44	20.93	1.52	16.21	445.8	1.40	18.64
16	2.02	167.73	605.0	.59	10.14	1.56	32.99	1340.6	.49	6.35
17	3.41	89.47	709.7	7.92	10.31	1.99	12.27	878.8	12.49	9.81
18	.69	23.00	293.1	1.49	26.78	3.94	7.28	402.1	2.00	20.84
19	2.49	56.10	634.5	6.26	12.15	1.43	9.68	775.7	8.54	11.16
20	.82	26.16	362.2	1.89	21.86	3.93	8.79	495.9	2.28	17.00
21	2.66	37.97	789.4	14.49	10.35	3.51	100.10	923.4	10.88	8.13
22	1.34	23.70	342.2	2.89	23.13	5.37	4.31	432.1	4.02	19.47
23	3.41	87.31	726.7	5.02	10.15	2.71	15.05	917.1	7.63	9.35
24	1.65	34.65	485.6	6.66	16.28	1.19	9.07	673.6	8.80	12.83
25	1.43	23.19	344.9	3.71	23.00	1.69	4.59	511.4	6.21	16.94
26	1.51	92.25	517.1	.86	13.31	1.74	24.25	674.3	2.19	12.36
27	2.16	36.14	610.2	9.48	13.17	1.73	12.96	773.5	12.85	11.10
28	1.42	28.29	369.2	2.83	21.22	4.17	4.70	472.2	4.90	18.01
29	2.95	90.64	570.1	2.44	12.30	2.24	13.56	691.4	3.10	12.33
30	1.57	29.72	522.7	6.62	15.45	1.17	12.92	618.6	7.51	13.81
31	1.37	28.07	388.8	4.40	20.30	2.08	4.43	520.7	7.47	16.61
32	1.52	86.08	490.2	.63	14.08	3.30	15.58	602.0	1.45	13.93
BAG (CALC.)	1.68	33.07	487.3	6.30	16.30	2.53	14.20	624.3	7.84	13.56
BAG (ACT.)	1.77	31.36	470.1	6.30	16.91	2.66	15.12	600.5	8.18	14.03
33	.53	20.06	84.5	.06	75.44	.33	1.16	87.2	.06	98.56
34	4.45	146.11	1084.9	.68	6.68	5.54	8.12	1092.6	.50	7.90
35	1.50	77.09	702.6	.34	10.71	1.44	9.78	679.9	.50	12.68
36	1.24	55.08	453.4	.31	16.32	.76	15.08	659.1	.57	12.95
37	1.05	30.01	349.3	.54	22.20	.96	13.14	412.4	1.20	20.35
38	.65	5.06	368.4	3.07	23.46	.52	5.93	469.2	3.19	18.49
39	.98	11.69	418.4	1.36	20.18	.46	6.06	556.2	7.01	15.65

EMISSION RESULTS IN GRAMS PER MILE (PER MINUTE FOR IDLE)
FUEL ECONOMY IN MILES PER GALLON (PER MINUTE FOR IDLE)

APPENDIX H

LISTING OF MODAL RESULTS ON INDIVIDUAL VEHICLES

ST. LOUIS

	VEH	YEAR	MAKE	MODL	CID	VEH	YEAR	MAKE	MODL	CID
	3115	1973	CHEV	IMPA	350	3116	1973	DODG	DART	225
MODE NO.	HC	CO	CO2	NOXC	FUEL ECONOMY	HC	CO	CO2	NOXC	FUEL ECONOMY
1	3.77	86.11	1105.4	7.40	7.09	3.19	18.54	719.8	7.29	11.69
2	.27	14.92	460.0	.29	18.33	1.19	3.08	287.3	1.58	30.00
3	3.56	118.48	997.9	.81	7.42	2.43	6.24	731.2	1.11	11.85
4	1.70	23.10	742.9	2.79	11.31	1.53	4.33	509.0	4.18	17.05
5	1.26	13.87	637.7	4.65	13.38	1.93	8.22	423.9	9.85	20.04
6	.71	5.56	311.3	.64	27.54	1.07	1.88	215.8	5.60	39.95
7	3.44	220.06	746.9	2.92	8.04	3.10	87.89	498.2	7.01	13.74
8	3.13	13.89	308.9	1.77	26.05	.83	4.03	292.4	8.91	29.46
9	1.45	34.99	663.3	5.25	12.28	1.41	7.46	447.1	12.24	19.16
10	1.15	3.58	320.9	1.38	26.88	2.49	3.24	214.5	5.99	39.02
11	3.45	214.98	795.5	3.56	7.76	2.58	53.05	556.9	10.16	13.69
12	5.53	18.03	320.2	1.55	24.25	2.79	4.77	225.9	7.12	36.64
13	2.30	79.00	805.0	6.00	9.48	2.14	28.82	538.5	11.37	15.03
14	1.28	4.36	380.2	2.08	22.69	1.83	4.72	267.7	8.29	31.60
15	.46	15.57	467.4	.31	17.99	1.07	1.91	265.9	1.14	32.60
16	.05	69.63	1318.3	.62	6.22	1.62	4.37	615.2	.64	14.15
17	2.27	33.50	826.7	8.32	10.01	2.04	13.16	507.1	10.06	16.61
18	.47	7.74	388.8	.74	22.05	1.72	1.55	240.3	6.52	35.76
19	1.68	31.44	712.2	5.17	11.57	1.66	7.34	458.9	8.20	18.66
20	.63	12.34	447.3	.74	18.94	2.69	2.31	304.6	6.70	28.02
21	4.51	287.30	880.5	3.05	6.59	3.47	121.90	513.7	5.51	12.39
22	1.92	5.61	402.9	1.87	21.24	3.22	5.70	293.0	8.22	28.44
23	2.86	77.17	886.4	3.37	8.73	2.16	9.36	522.2	4.68	16.32
24	1.34	22.98	564.7	5.23	14.67	1.47	7.26	381.5	9.58	22.32
25	1.77	5.51	434.4	2.68	19.78	1.05	5.57	345.1	11.38	24.84
26	.69	21.95	698.5	.61	12.07	1.69	3.21	456.6	1.88	19.01
27	1.72	37.75	700.8	6.56	11.59	1.66	11.69	462.3	11.06	18.26
28	1.28	5.35	456.1	2.05	18.94	2.99	5.87	323.2	9.40	25.96
29	1.70	49.60	687.4	1.78	11.51	1.59	4.33	418.3	2.55	20.64
30	1.63	50.81	602.5	4.20	12.91	1.49	16.55	340.4	7.17	23.91
31	1.37	5.51	483.7	2.87	17.87	.98	6.33	391.3	12.34	21.95
32	.65	24.01	660.4	.67	12.68	1.41	3.05	410.4	1.53	21.15
BAG (CALC.)	1.65	47.87	570.1	3.16	13.64	1.97	15.65	388.8	8.47	21.15
BAG (ACT.)	1.79	51.17	576.9	3.27	13.39	1.99	16.17	392.2	8.40	20.93
33	.28	11.67	95.6	.06	77.26	.23	.27	62.9	.10	138.56
34	3.06	113.62	1171.9	.76	6.53	2.75	3.62	732.1	.75	11.89
35	.54	47.50	922.8	.49	8.88	1.34	2.53	456.6	.61	19.09
36	.48	36.81	615.3	.33	13.16	1.30	1.92	341.7	.41	25.44
37	.69	26.64	402.0	.28	19.90	1.25	1.59	273.7	1.59	31.68
38	.39	10.94	435.0	1.17	19.57	.90	1.69	304.3	8.27	28.65
39	.37	6.69	499.1	3.48	17.38	1.13	10.83	362.8	12.57	23.15

EMISSION RESULTS IN GRAMS PER MILE (PER MINUTE FOR IDLE)
FUEL ECONOMY IN MILES PER GALLON (PER MINUTE FOR IDLE)

APPENDIX H

LISTING OF MODAL RESULTS ON INDIVIDUAL VEHICLES

ST. LOUIS

	VEH	YEAR	MAKE	MODL	CID	VEH	YEAR	MAKE	MODL	CID
	3117	1973	FORD	PINT	122	3118	1973	FORD	TORI	351
MODE NO.	HC	CO	CO2	NOXC	FUEL ECONOMY	HC	CO	CO2	NOXC	FUEL ECONOMY
1	3.28	74.33	885.4	10.80	8.77	8.32	121.92	997.4	4.86	7.30
2	1.22	49.38	211.7	.56	30.27	4.06	121.22	347.0	.45	16.13
3	5.56	186.24	689.5	4.02	8.88	10.23	247.25	1065.2	.55	5.97
4	1.67	40.69	550.3	5.60	14.33	5.14	109.46	795.5	1.58	9.02
5	1.33	33.09	515.1	6.07	15.54	4.06	39.16	565.4	5.96	13.87
6	.40	6.78	225.6	.92	37.37	4.14	36.73	220.5	2.01	30.46
7	2.43	56.32	631.4	11.01	12.20	4.12	50.50	902.4	8.54	8.92
8	.27	6.20	207.8	1.72	40.64	4.28	27.16	281.7	2.39	26.26
9	.77	13.59	487.8	6.97	17.35	2.60	26.46	668.2	5.10	12.36
10	2.74	12.94	174.6	.93	43.59	4.20	47.43	274.9	1.24	24.47
11	2.12	65.14	606.6	9.11	12.40	3.34	39.47	884.1	10.76	9.28
12	3.68	17.59	180.8	1.15	40.32	5.86	54.64	284.8	1.48	22.80
13	1.72	48.60	608.8	9.10	12.85	3.70	43.75	844.7	8.64	9.59
14	1.00	8.82	220.8	1.44	37.32	4.71	38.10	311.9	1.58	22.95
15	1.71	44.72	228.6	.29	29.17	2.51	75.18	367.0	.65	18.00
16	3.23	136.78	272.3	.52	17.84	5.22	279.15	685.0	.32	7.78
17	2.02	44.51	645.3	9.44	12.30	4.90	93.25	834.3	4.83	8.91
18	1.30	12.55	210.2	1.07	37.92	3.31	64.21	332.9	1.16	19.98
19	1.43	31.19	523.2	8.54	15.39	4.45	72.62	715.4	3.28	10.52
20	2.35	20.49	242.7	1.20	31.43	3.89	80.20	408.3	1.47	16.24
21	3.31	95.03	658.5	11.55	10.85	4.10	53.93	995.6	11.25	8.12
22	3.43	14.91	225.7	1.67	34.14	5.51	55.10	294.5	4.11	22.27
23	3.22	70.49	631.5	9.13	11.79	6.86	139.90	813.6	2.13	8.41
24	1.36	39.99	435.1	6.41	17.67	3.38	29.02	584.7	6.83	13.85
25	.24	5.67	271.2	2.25	31.60	5.09	33.85	330.9	5.57	22.17
26	2.27	63.64	294.4	.67	22.10	3.88	91.46	574.2	.86	12.15
27	1.14	26.79	541.7	8.39	15.11	3.52	47.60	724.6	6.47	10.95
28	2.94	14.55	249.9	1.59	31.46	4.03	57.68	371.3	1.52	18.69
29	4.13	69.61	504.4	6.53	14.16	5.95	132.97	780.2	1.77	8.81
30	1.69	53.88	456.6	6.58	16.24	2.99	33.47	655.8	5.12	12.36
31	.28	6.91	322.7	2.48	26.53	4.14	33.61	345.0	5.64	21.60
32	2.93	66.96	272.7	.49	22.92	3.74	99.55	525.4	.76	12.79
BAG (CALC.)	1.94	31.63	386.8	4.43	20.05	3.78	55.17	542.1	4.72	13.85
BAG (ACT.)	1.99	30.51	362.2	4.47	21.31	4.07	52.27	531.9	4.76	14.16
33	.41	14.14	29.4	.02	167.73	1.22	40.26	78.0	.04	61.12
34	4.66	170.45	424.2	.27	12.56	13.99	420.67	1005.3	.51	5.19
35	2.77	104.17	282.7	.27	19.50	8.33	246.12	704.5	.52	7.94
36	2.09	62.23	258.8	.27	24.44	5.04	158.03	386.5	.26	13.64
37	1.41	25.48	258.8	.93	29.26	2.76	30.24	407.8	.55	19.13
38	.12	1.46	309.9	2.33	28.39	2.28	12.31	377.4	2.73	21.97
39	.05	1.29	357.9	3.78	24.65	2.75	27.54	418.8	5.82	18.85

EMISSION RESULTS IN GRAMS PER MILE (PER MINUTE FOR IDLE)
FUEL ECONOMY IN MILES PER GALLON (PER MINUTE FOR IDLE)

APPENDIX H

LISTING OF MODAL RESULTS ON INDIVIDUAL VEHICLES

ST. LOUIS

	VEH	YEAR	MAKE	MODL	CID	VEH	YEAR	MAKE	MODL	CID
	3119	1973	FORD	MUST	302	3120	1973	FORD	TORI	351
MODE NO.	HC	CO	CO2	NOXC	FUEL ECONOMY	HC	CO	CO2	NOXC	FUEL ECONOMY
1	9.49	177.33	1091.0	6.54	6.34	3.44	57.68	1314.6	9.73	6.27
2	2.26	64.70	380.4	.75	18.14	1.49	42.34	450.0	.24	17.03
3	10.66	210.86	1277.1	2.88	5.40	4.26	97.76	1294.0	2.21	6.07
4	4.92	43.34	887.8	5.39	9.14	2.09	33.62	920.6	5.48	9.06
5	4.36	23.65	706.1	7.06	11.72	2.10	10.05	696.6	8.77	12.34
6	1.07	27.36	261.9	1.08	28.79	1.85	12.44	292.7	1.44	27.90
7	7.38	145.55	867.7	5.70	7.93	3.53	138.88	868.7	6.80	8.08
8	3.41	28.58	250.7	1.71	28.96	2.18	10.98	293.5	1.58	27.94
9	4.08	25.29	689.3	9.63	11.96	1.38	10.53	598.8	9.99	14.32
10	2.03	29.81	266.2	1.29	27.78	2.98	18.49	278.5	1.61	28.00
11	6.09	84.34	836.9	9.99	8.98	2.62	55.56	897.4	9.44	8.94
12	2.95	43.13	257.8	1.14	26.49	5.08	23.44	326.0	1.34	23.42
13	5.39	54.21	868.5	10.83	9.14	2.23	44.69	905.2	9.36	9.03
14	2.16	31.64	270.6	1.67	27.13	2.98	15.20	334.6	2.05	24.12
15	1.97	55.25	288.6	.86	23.26	.71	15.30	480.7	.52	17.51
16	6.63	224.81	509.9	.64	10.04	4.48	119.39	963.9	.51	7.61
17	6.17	65.44	861.2	9.67	9.02	2.72	44.26	907.7	8.46	9.00
18	1.26	37.03	285.6	.79	25.52	1.78	14.35	359.1	1.02	22.92
19	5.43	51.61	833.3	7.28	9.53	1.73	29.53	780.6	7.49	10.66
20	1.76	52.14	348.3	.96	20.36	2.06	24.88	400.1	1.13	19.91
21	7.57	140.82	891.8	7.97	7.81	4.49	188.10	895.7	5.61	7.36
22	2.42	40.33	290.9	1.69	24.52	3.68	22.63	385.9	1.53	20.49
23	6.62	100.61	781.0	6.95	9.24	3.12	62.55	950.7	4.74	8.38
24	3.64	25.81	662.0	8.18	12.43	1.55	13.21	626.6	8.44	13.61
25	3.12	30.73	299.6	1.92	24.81	2.55	12.83	389.6	3.10	21.24
26	3.01	75.12	474.7	.86	14.74	1.43	16.65	710.7	1.00	11.97
27	4.77	43.29	721.2	9.49	11.03	1.41	19.08	807.4	8.87	10.54
28	2.46	35.26	337.6	1.58	22.14	3.30	19.95	395.8	2.32	20.28
29	5.94	87.47	836.9	4.84	8.94	2.44	39.48	846.3	4.21	9.69
30	4.38	46.86	675.7	6.86	11.63	1.69	11.80	599.0	9.80	14.25
31	3.01	26.12	306.0	2.27	24.89	1.51	12.45	421.5	2.71	19.91
32	2.58	72.93	504.2	1.06	14.15	1.45	19.52	568.3	.73	14.71
BAG (CALC.)	3.59	51.87	535.0	4.53	14.14	2.20	30.34	594.6	4.58	13.67
BAG (ACT.)	3.87	49.68	524.8	4.65	14.43	2.33	31.99	591.2	4.82	13.68
33	.86	19.49	84.9	.06	75.04	.52	13.54	110.2	.09	66.67
34	7.73	130.95	1113.3	.72	6.61	5.88	150.68	1322.7	.82	5.62
35	3.92	68.98	566.6	.36	12.91	1.31	32.25	1068.3	.93	7.90
36	2.88	39.72	468.2	.40	16.44	1.02	22.01	697.8	.64	12.07
37	1.05	7.14	467.9	1.13	18.40	.69	3.68	421.0	.64	20.69
38	1.68	15.00	470.5	2.00	17.77	1.06	3.98	387.2	3.28	22.37
39	2.77	20.06	450.2	4.83	18.09	1.35	10.39	457.1	6.79	18.58

EMISSION RESULTS IN GRAMS PER MILE (PER MINUTE FOR IDLE)
FUEL ECONOMY IN MILES PER GALLON (PER MINUTE FOR IDLE)

APPENDIX H

LISTING OF MODAL RESULTS ON INDIVIDUAL VEHICLES

ST. LOUIS

	VEH	YEAR	MAKE	MODL	CID	VEH	YEAR	MAKE	MODL	CID
	3121	1973	FORD	STAW	400	3122	1973	MERC	MONG	400
MODE NO.	HC	CO	CO2	NOXC	FUEL ECONOMY	HC	CO	CO2	NOXC	FUEL ECONOMY
1	4.62	60.68	1398.9	20.77	5.88	2.86	79.41	1439.1	8.49	5.64
2	2.61	75.38	575.3	1.25	12.64	2.57	71.08	465.4	1.11	15.16
3	5.28	108.35	1446.8	7.56	5.43	4.71	178.39	1362.1	3.36	5.36
4	2.86	39.35	894.6	10.94	9.19	1.47	48.21	914.0	4.12	8.92
5	1.95	12.41	778.5	12.85	11.04	.35	6.46	829.0	5.23	10.56
6	1.22	26.23	293.6	1.61	26.20	4.13	15.85	359.7	1.53	22.32
7	2.63	21.46	1016.8	26.64	8.38	1.58	57.45	1052.7	9.52	7.73
8	1.25	23.94	263.0	6.01	29.14	4.98	7.21	422.9	2.67	19.72
9	1.39	6.65	755.6	18.61	11.52	.24	2.53	876.3	7.02	10.07
10	1.14	31.23	296.0	2.31	25.45	3.81	23.55	364.1	1.73	21.48
11	1.88	15.57	1054.4	24.57	8.18	.73	14.41	1083.9	12.51	8.00
12	1.59	38.66	316.9	1.94	23.19	7.29	29.07	374.3	1.84	20.03
13	1.89	18.37	1071.1	23.24	8.03	.69	17.08	1045.7	11.60	8.26
14	1.12	25.14	349.0	2.71	22.64	4.28	12.56	462.2	2.79	17.91
15	1.78	50.53	380.1	.54	19.08	1.33	20.43	467.6	1.54	17.61
16	5.67	248.02	986.3	1.79	6.37	5.91	230.14	616.8	.68	8.90
17	2.52	29.41	1054.0	20.35	8.01	1.75	48.62	1017.8	9.41	8.07
18	1.25	39.05	363.9	1.74	20.68	3.85	27.34	422.3	1.81	18.59
19	2.40	35.27	882.1	15.11	9.39	1.33	50.33	802.0	7.35	10.03
20	1.59	50.05	479.5	2.43	15.76	6.42	50.74	512.4	2.09	14.49
21	3.36	75.55	1071.4	26.68	7.39	1.46	49.89	1091.6	12.97	7.56
22	1.55	41.14	376.5	5.11	19.90	5.20	23.58	481.4	2.26	16.59
23	3.76	66.12	1230.7	13.96	6.59	2.50	71.21	1063.5	7.10	7.50
24	1.39	14.02	774.6	14.19	11.08	.50	7.97	805.5	6.77	10.83
25	1.11	19.97	365.3	3.60	22.18	3.76	7.35	535.6	3.36	15.88
26	2.54	81.13	600.1	1.13	12.06	3.58	59.80	699.2	1.74	11.03
27	2.02	18.78	875.9	20.97	9.73	.93	26.44	867.2	8.91	9.73
28	1.33	35.41	413.0	3.34	18.77	3.75	29.43	494.8	2.58	16.05
29	3.40	86.81	961.4	10.94	8.01	2.25	79.70	817.3	4.48	9.35
30	1.66	16.72	744.2	17.16	11.44	.77	13.86	803.1	7.00	10.73
31	1.16	18.42	379.9	8.59	21.52	3.35	5.99	518.3	3.71	16.49
32	2.46	73.17	543.8	1.36	13.31	2.00	44.53	598.2	1.61	13.16
BAG (CALC.)	1.72	31.17	627.5	10.60	13.02	2.09	28.70	685.3	5.34	12.04
BAG (ACT.)	1.75	30.17	624.1	10.68	13.11	2.20	31.55	685.3	5.57	11.96
33	.79	26.06	143.2	.21	47.56	1.04	36.78	82.4	.06	61.88
34	9.14	305.29	1768.0	2.31	3.90	11.03	400.43	1055.2	.75	5.16
35	4.70	150.48	870.5	1.21	7.91	3.00	96.67	992.4	1.00	7.69
36	3.07	92.07	851.5	.80	8.82	2.81	102.19	472.4	.43	13.83
37	1.31	15.72	402.8	1.04	20.56	.14	2.55	572.6	1.43	15.38
38	.97	3.37	398.5	1.99	21.81	.09	1.99	577.0	2.49	15.29
39	1.34	5.95	480.3	12.03	17.97	.16	3.22	641.1	4.40	13.73

EMISSION RESULTS IN GRAMS PER MILE (PER MINUTE FOR IDLE)
FUEL ECONOMY IN MILES PER GALLON (PER MINUTE FOR IDLE)

APPENDIX H

LISTING OF MODAL RESULTS ON INDIVIDUAL VEHICLES

ST. LOUIS

	VEH	YEAR	MAKE	MODL	CID	VEH	YEAR	MAKE	MODL	CID
	3123	1973	OLDS	TORO	455	3124	1973	OLDS	CUTL	350
MODE NO.	HC	CO	CO2	NOXC	FUEL ECONOMY	HC	CO	CO2	NOXC	FUEL ECONOMY
1	7.49	226.95	1320.8	7.95	5.22	4.42	116.67	1078.9	5.63	6.95
2	1.85	44.10	462.6	1.10	16.51	1.58	52.64	362.4	.30	19.72
3	5.86	158.99	1456.0	1.71	5.15	4.94	166.81	920.1	1.69	7.41
4	5.02	190.82	900.4	2.68	7.30	2.88	48.10	725.9	2.75	10.95
5	3.28	97.66	775.0	7.10	9.45	1.41	16.94	559.5	3.95	15.03
6	1.50	25.82	324.3	1.59	24.01	1.60	7.61	281.5	1.17	29.73
7	4.25	97.50	1054.0	16.62	7.27	2.44	30.62	865.4	9.07	9.63
8	1.61	24.67	366.3	5.22	21.64	1.22	3.41	387.2	1.18	22.39
9	3.20	45.74	835.2	14.44	9.68	1.00	9.61	734.9	5.78	11.78
10	3.44	20.46	328.8	3.13	23.87	2.94	14.94	293.3	.94	27.22
11	4.10	76.13	1029.7	20.12	7.64	1.95	17.50	873.5	9.57	9.78
12	4.72	22.85	326.2	3.79	23.54	5.32	12.50	306.5	1.31	25.87
13	4.14	79.73	1012.0	19.14	7.72	2.05	19.76	843.5	8.25	10.07
14	2.87	26.79	344.3	3.96	22.44	3.14	9.74	362.2	1.27	22.91
15	2.99	37.77	481.5	1.03	16.13	1.25	19.51	437.8	.66	18.79
16	4.96	51.80	1020.8	.90	7.94	3.16	114.22	951.6	.33	7.78
17	4.80	146.15	968.8	10.95	7.31	2.24	38.65	839.0	5.87	9.79
18	2.81	47.62	359.9	1.84	20.00	2.31	16.82	356.5	1.54	22.74
19	4.34	121.29	877.5	8.47	8.20	2.15	34.50	682.2	4.24	11.94
20	4.10	38.78	413.0	1.99	18.23	3.82	17.61	410.4	1.54	19.71
21	5.13	133.97	1111.3	17.12	6.63	2.66	31.97	879.3	10.84	9.46
22	4.46	31.67	378.3	3.82	20.07	4.16	18.01	370.1	1.35	21.56
23	6.61	168.42	1133.8	6.84	6.25	3.65	70.00	670.0	2.59	11.21
24	3.32	66.36	704.4	10.29	10.83	1.33	8.91	615.8	4.96	14.00
25	2.24	36.15	424.4	5.18	18.18	1.32	4.67	431.6	1.72	20.03
26	4.21	45.62	660.5	1.94	11.90	1.77	12.68	570.1	.79	14.90
27	3.96	78.28	840.1	14.71	9.10	1.90	21.82	722.8	5.89	11.63
28	4.04	34.99	413.3	4.11	18.45	2.96	11.32	437.2	1.28	19.11
29	6.25	143.33	897.4	3.26	7.77	3.05	65.15	681.6	2.44	11.18
30	3.40	69.68	772.1	11.08	9.95	1.38	11.97	634.0	4.79	13.51
31	2.33	41.61	445.3	6.52	17.13	.71	3.68	478.8	2.02	18.23
32	4.31	41.82	550.0	1.80	14.10	1.96	27.68	479.5	.78	16.77
BAG (CALC.)	3.64	58.91	635.1	8.54	12.01	2.18	20.87	586.0	3.84	14.18
BAG (ACT.)	3.60	60.55	652.8	8.58	11.69	2.37	21.30	572.4	3.91	14.47
33	.53	11.59	100.7	.08	73.61	.83	21.19	66.7	.04	86.44
34	6.31	141.84	1281.7	.84	5.82	9.64	236.14	914.1	.50	6.75
35	2.70	51.22	661.5	.43	11.83	3.50	76.52	740.9	.50	10.18
36	1.75	29.54	614.3	.65	13.32	2.24	43.46	516.7	.34	14.99
37	1.46	26.86	477.7	1.40	16.92	.80	4.59	433.1	.71	20.04
38	1.38	29.69	509.3	3.03	15.84	1.06	2.77	478.3	.69	18.26
39	1.55	22.07	563.1	8.80	14.73	.49	3.01	542.0	2.09	16.19

EMISSION RESULTS IN GRAMS PER MILE (PER MINUTE FOR IDLE)
FUEL ECONOMY IN MILES PER GALLON (PER MINUTE FOR IDLE)

APPENDIX H

LISTING OF MODAL RESULTS ON INDIVIDUAL VEHICLES

ST. LOUIS

	VEH	YEAR	MAKE	MODL	CID	VEH	YEAR	MAKE	MODL	CID
	3125	1973	PLYM	SATE	318	3126	1973	PLYM	VALI	318
MODE NO.	HC	CO	CO2	NOXC	FUEL ECONOMY	HC	CO	CO2	NOXC	FUEL ECONOMY
1	5.36	73.35	928.4	8.68	8.37	5.22	75.78	897.0	3.97	8.60
2	2.40	47.01	396.9	.70	18.55	1.89	31.48	335.3	.52	22.71
3	7.43	145.87	996.6	3.24	7.10	5.16	135.23	958.9	1.23	7.47
4	2.58	26.62	642.5	5.73	12.82	3.08	50.35	588.4	2.62	13.10
5	2.69	10.29	529.8	7.98	16.01	2.13	14.17	508.7	2.49	16.50
6	1.55	9.76	272.8	2.31	30.28	1.47	11.42	245.9	1.46	33.06
7	3.62	34.00	759.3	12.35	10.77	3.78	41.68	654.9	5.53	12.12
8	2.01	9.10	334.5	2.29	24.99	2.33	8.16	243.7	1.51	33.63
9	1.90	8.11	555.6	8.65	15.45	2.52	17.03	529.7	4.58	15.72
10	1.99	17.56	265.4	1.74	29.66	2.54	13.71	240.0	1.38	32.92
11	3.09	31.15	790.5	12.30	10.45	3.37	43.36	696.1	5.09	11.45
12	3.46	23.73	306.9	2.56	24.99	5.06	18.60	276.6	1.57	27.57
13	4.12	30.88	734.3	10.98	11.15	3.47	43.30	679.4	4.74	11.70
14	1.96	13.77	321.2	3.04	25.42	2.78	9.44	265.3	1.71	30.72
15	1.87	14.59	398.9	1.21	20.75	1.44	9.27	354.6	.75	23.75
16	5.78	133.54	777.0	0.00	8.83	4.06	138.17	645.3	.48	10.14
17	3.58	47.86	729.1	8.29	10.88	3.53	43.08	701.4	3.52	11.37
18	2.03	17.07	335.0	2.80	24.10	1.70	12.30	316.8	1.81	25.99
19	2.82	36.42	627.0	6.85	12.81	2.89	34.23	507.6	2.10	15.55
20	2.04	25.08	373.9	2.60	21.14	2.25	18.70	350.9	1.40	22.91
21	4.07	61.91	755.1	12.17	10.26	3.85	61.74	707.4	4.85	10.87
22	2.72	22.55	377.2	2.87	21.07	3.15	18.02	326.7	1.64	24.31
23	4.15	80.85	741.7	4.96	10.06	4.00	56.24	761.0	2.03	10.30
24	2.45	16.16	480.1	7.23	17.29	2.26	13.17	475.1	3.45	17.65
25	1.84	11.11	410.3	4.18	20.47	2.72	8.51	340.4	2.38	24.49
26	2.53	21.50	592.2	1.32	14.00	2.27	22.21	578.0	.93	14.31
27	2.89	31.88	615.5	7.54	13.15	2.81	32.27	561.6	3.61	14.29
28	2.42	20.84	387.2	3.83	20.75	2.88	18.17	346.9	1.97	23.08
29	3.23	59.98	547.2	3.63	13.62	3.32	62.21	508.7	1.81	14.38
30	1.97	15.30	442.8	6.48	18.76	2.31	17.19	471.0	2.47	17.56
31	1.67	11.88	459.8	4.41	18.35	1.81	9.87	393.8	2.54	21.38
32	2.22	24.27	556.5	1.36	14.75	2.08	27.65	507.9	.90	15.91
BAG (CALC.)	2.51	26.82	515.0	5.39	15.70	2.64	27.01	460.6	2.77	17.36
BAG (ACT.)	2.76	26.72	504.8	5.35	15.98	2.89	26.75	446.9	2.99	17.82
33	.78	22.51	82.2	.06	73.94	.74	15.64	70.6	.04	91.04
34	8.99	268.53	1029.0	.67	6.00	8.02	195.29	828.8	.52	7.64
35	4.49	124.45	537.1	.34	11.88	4.08	99.46	460.3	.26	14.10
36	2.57	49.43	510.5	.46	14.88	2.58	49.28	407.0	.25	18.02
37	2.25	8.76	315.9	1.67	26.35	1.45	9.53	326.5	.67	25.65
38	1.77	2.75	347.8	5.42	24.81	1.17	3.23	329.0	2.67	26.28
39	1.85	5.95	400.9	7.01	21.33	1.81	8.86	386.6	3.83	21.84

EMISSION RESULTS IN GRAMS PER MILE (PER MINUTE FOR IDLE)
FUEL ECONOMY IN MILES PER GALLON (PER MINUTE FOR IDLE)

APPENDIX H

LISTING OF MODAL RESULTS ON INDIVIDUAL VEHICLES

ST. LOUIS

	VEH	YEAR	MAKE	MODL	CID	VEH	YEAR	MAKE	MODL	CID
	3127	1973	PONT	GRNV	400	3128	1973	PONT	LEMA	350
MODE NO.	HC	CO	CO2	NOXC	FUEL ECONOMY	HC	CO	CO2	NOXC	FUEL ECONOMY
1	7.76	54.82	1758.6	5.85	4.75	3.49	21.88	1599.7	24.74	5.39
2	4.80	74.02	412.6	.16	16.31	2.09	4.45	511.7	1.35	16.89
3	13.10	145.58	1795.5	1.65	4.30	4.28	30.85	1609.7	12.57	5.31
4	3.59	14.00	1124.7	1.53	7.66	1.98	11.78	1040.2	15.30	8.33
5	3.54	10.59	830.6	15.60	10.34	2.45	5.32	643.3	24.74	13.46
6	5.23	18.74	227.5	1.85	32.44	4.29	3.34	266.2	1.11	31.14
7	4.39	29.55	1151.3	20.98	7.33	3.56	67.45	958.8	20.60	8.25
8	5.13	15.39	287.8	3.94	27.03	4.21	3.19	271.8	2.72	30.59
9	2.88	6.92	854.8	20.20	10.15	1.95	5.82	690.6	25.16	12.57
10	4.87	29.45	261.2	2.75	27.48	4.27	2.69	292.8	3.11	28.58
11	3.99	17.13	1077.9	22.85	7.94	3.99	94.83	956.5	21.76	7.94
12	7.38	40.40	235.0	2.88	27.57	5.23	3.13	336.3	2.15	24.80
13	3.75	28.23	1205.0	7.59	7.04	3.43	48.77	979.8	26.14	8.32
14	4.87	21.33	280.8	2.95	26.91	3.71	2.49	303.4	2.85	27.81
15	5.13	56.08	353.4	.29	19.39	2.87	.65	412.6	1.88	21.00
16	16.26	272.18	793.0	.35	6.98	6.64	2.41	1154.3	6.11	7.53
17	4.51	38.18	1198.1	5.50	6.98	3.48	13.38	1063.0	30.17	8.11
18	5.25	33.65	321.8	.09	22.68	3.66	3.04	312.4	1.86	27.00
19	5.45	36.23	1019.9	21.84	8.11	3.57	19.58	986.3	26.95	8.63
20	6.95	51.89	288.1	1.86	22.66	4.16	5.43	423.6	2.51	19.93
21	5.03	74.57	1296.3	9.49	6.21	4.07	84.78	1098.5	25.07	7.13
22	6.16	40.28	322.2	.80	21.92	4.66	4.32	359.4	2.77	23.29
23	6.53	74.82	1380.3	3.21	5.84	4.48	10.27	1241.1	36.39	6.98
24	2.57	10.27	837.6	12.57	10.30	2.26	6.26	672.9	22.76	12.86
25	4.73	21.47	278.6	3.44	27.12	4.19	4.21	327.5	4.11	25.55
26	6.24	72.42	489.7	.25	14.24	3.75	2.75	619.1	2.89	13.97
27	3.17	24.60	1010.9	5.60	8.38	2.81	22.25	868.5	25.23	9.73
28	5.34	40.43	336.1	2.76	21.31	4.08	4.47	369.4	3.75	22.79
29	6.23	85.29	1143.9	2.14	6.84	3.98	5.49	1052.7	30.21	8.26
30	2.79	12.68	962.7	14.49	8.95	2.22	12.67	781.2	19.43	10.98
31	5.15	20.85	284.8	2.82	26.58	3.80	5.78	331.9	4.71	25.14
32	6.56	85.77	383.6	0.00	16.46	2.81	4.18	582.9	2.18	14.83
BAG (CALC.)	4.14	32.57	655.8	7.13	12.33	2.91	14.04	602.2	12.57	14.01
BAG (ACT.)	4.37	30.78	645.2	7.61	12.55	3.08	14.25	588.6	12.69	14.30
33	1.69	32.29	97.6	.07	57.76	.46	.56	136.9	.13	63.73
34	20.33	367.84	1215.9	.83	4.78	4.91	8.26	1623.0	1.02	5.37
35	10.37	174.02	618.6	.54	9.60	7.95	3.63	789.1	1.81	10.82
36	7.67	119.36	420.3	.28	14.04	7.33	3.08	516.4	.69	16.30
37	2.94	18.30	408.5	1.82	19.87	2.77	1.95	361.2	2.10	23.79
38	2.06	6.36	461.5	6.09	18.57	1.21	3.35	394.8	1.61	21.98
39	1.91	8.03	556.5	13.50	15.43	1.17	3.69	471.6	12.50	18.45

EMISSION RESULTS IN GRAMS PER MILE (PER MINUTE FOR IDLE)
FUEL ECONOMY IN MILES PER GALLON (PER MINUTE FOR IDLE)

APPENDIX H

LISTING OF MODAL RESULTS ON INDIVIDUAL VEHICLES

ST. LOUIS

	VEH	YEAR	MAKE	MODL	CID	VEH	YEAR	MAKE	MODL	CID
	3129	1973	DATS	STAW	97	3130	1973	OPEL	STAW	116
MODE NO.	HC	CO	CO2	NOXC	FUEL ECONOMY	HC	CO	CO2	NOXC	FUEL ECONOMY
1	7.23	104.52	554.6	4.17	11.97	4.70	124.96	621.8	6.34	10.65
2	2.39	13.06	233.1	.85	33.98	1.04	50.14	185.7	.23	33.14
3	7.95	163.77	405.1	0.00	12.91	6.07	219.34	659.3	.56	8.67
4	2.29	38.83	352.1	1.60	21.11	2.99	99.44	417.3	2.92	15.22
5	1.70	15.05	346.7	4.34	23.62	2.39	54.62	401.5	5.00	17.93
6	.78	3.77	167.0	2.91	50.60	1.16	29.20	153.6	.90	43.68
7	2.45	71.99	360.1	3.85	18.45	3.21	97.86	525.3	7.44	12.88
8	.86	4.56	228.5	6.68	37.24	1.52	38.31	151.4	1.68	41.01
9	1.33	11.81	335.8	7.95	24.75	2.49	80.28	410.0	4.99	16.31
10	3.23	6.18	169.0	3.83	46.98	1.54	34.41	136.2	1.07	45.48
11	3.02	80.58	412.3	5.76	16.18	3.44	122.09	475.1	5.04	13.09
12	4.06	6.00	194.9	4.83	40.86	1.72	35.14	162.7	1.13	39.74
13	3.50	73.71	401.4	5.45	16.80	3.07	105.74	445.8	5.39	14.27
14	1.39	4.52	220.9	5.52	38.19	1.64	38.09	178.5	1.60	36.44
15	1.94	16.97	203.4	.49	37.57	1.65	68.30	153.6	.22	33.34
16	4.07	92.75	197.9	.36	24.89	3.11	105.23	456.5	.49	14.05
17	4.57	58.84	413.2	4.64	17.06	3.19	87.43	485.6	5.74	14.02
18	1.58	6.81	236.7	3.63	35.17	1.10	45.11	201.3	.97	32.20
19	2.54	31.50	335.1	2.97	22.60	2.92	82.61	412.4	5.03	16.09
20	3.62	11.43	238.2	3.33	33.16	1.38	45.32	213.4	1.18	30.72
21	5.43	118.16	373.4	3.35	15.40	3.41	107.18	515.7	7.55	12.77
22	4.00	8.73	229.4	5.12	34.70	1.80	41.76	172.6	1.46	36.38
23	5.44	77.99	419.7	2.25	15.86	3.88	102.27	408.3	2.66	15.27
24	1.51	17.76	292.0	4.09	27.34	2.12	68.05	337.7	3.86	19.67
25	.85	4.23	271.3	6.80	31.62	1.72	47.06	225.6	2.13	29.10
26	2.86	23.28	331.5	.71	23.53	2.51	108.95	236.9	.56	21.33
27	2.31	29.57	381.1	7.14	20.41	2.64	80.44	398.2	4.55	16.65
28	3.44	7.19	229.3	5.20	35.29	1.97	47.05	209.8	1.65	30.61
29	3.77	64.02	279.5	1.36	22.64	3.18	88.90	362.2	1.15	17.33
30	1.76	26.63	319.6	3.83	24.18	2.15	62.54	362.6	4.65	18.98
31	.89	5.64	297.7	7.34	28.69	1.61	52.78	255.6	2.45	25.82
32	2.68	22.25	265.8	.35	28.69	2.16	99.77	217.0	.54	23.32
BAG (CALC.)	3.00	29.31	306.3	5.31	24.53	2.24	69.56	298.2	2.89	21.41
BAG (ACT.)	3.15	32.33	309.9	5.78	23.94	2.24	69.45	291.4	2.93	21.77
33	.93	15.07	27.6	.02	163.76	.15	6.84	36.3	.02	186.82
34	7.03	200.56	426.6	.27	11.62	1.40	49.71	437.0	.26	17.08
35	3.62	79.44	530.5	.71	13.31	1.92	67.53	321.4	.25	20.47
36	2.15	41.57	353.9	.55	20.83	1.62	59.65	222.2	.17	27.65
37	1.32	17.00	270.8	1.35	29.42	1.56	61.99	172.7	.30	32.26
38	1.14	11.24	240.7	3.65	33.88	1.57	45.60	235.3	1.77	28.45
39	1.13	6.68	299.6	8.36	28.29	1.62	52.34	278.4	3.50	24.26

EMISSION RESULTS IN GRAMS PER MILE (PER MINUTE FOR IDLE)
FUEL ECONOMY IN MILES PER GALLON (PER MINUTE FOR IDLE)

APPENDIX H

LISTING OF MODAL RESULTS ON INDIVIDUAL VEHICLES

ST. LOUIS

	VEH	YEAR	MAKE	MODL	CID	VEH	YEAR	MAKE	MODL	CID
	3131	1973	TOYO	CARI	97	3132	1973	VOLK	SEDA	103
MODE NO.	HC	CO	CO2	NOXC	FUEL ECONOMY	HC	CO	CO2	NOXC	FUEL ECONOMY
1	4.26	101.46	668.8	4.52	10.54	10.34	134.31	463.3	1.71	12.55
2	1.24	32.48	169.1	.58	39.61	1.21	26.44	199.3	.85	36.28
3	5.04	135.60	558.3	1.19	11.27	9.39	136.18	443.6	.26	12.91
4	2.35	37.77	426.7	3.07	17.99	3.89	65.79	352.5	.87	18.95
5	1.90	22.86	413.7	5.00	19.48	2.60	15.18	298.0	2.52	26.89
6	1.41	20.40	111.1	1.45	60.11	.53	5.80	162.5	1.50	51.20
7	3.82	136.69	433.3	3.98	13.44	1.64	25.99	272.5	3.21	27.86
8	1.98	17.90	127.6	3.59	54.78	.72	12.81	238.0	3.16	34.09
9	2.26	39.85	406.0	8.16	18.66	1.39	13.23	342.2	4.15	24.16
10	2.51	21.88	127.8	2.56	52.16	1.36	13.09	178.6	2.05	43.62
11	3.21	116.05	443.3	4.89	13.96	3.96	60.76	369.3	4.15	18.59
12	3.54	23.14	114.6	2.95	54.72	1.13	11.51	196.4	2.84	40.71
13	3.07	96.76	456.4	4.80	14.36	5.19	59.72	384.2	4.26	17.95
14	2.37	20.98	140.2	3.56	49.12	.62	10.09	190.6	2.56	42.59
15	1.16	25.97	157.2	1.09	44.02	1.24	24.68	163.2	.51	43.09
16	1.94	86.75	272.2	.46	21.41	4.67	127.99	471.1	.46	12.92
17	2.99	86.94	444.2	3.71	15.03	6.54	59.67	394.0	3.50	17.45
18	2.06	19.20	134.9	2.15	51.71	.86	13.75	193.8	1.59	40.69
19	2.55	66.81	422.1	3.54	16.58	3.26	45.13	288.6	1.75	23.99
20	2.21	24.67	156.8	2.09	43.81	.80	11.90	217.8	2.02	37.12
21	4.12	169.92	461.1	3.24	11.97	7.37	86.82	338.8	2.85	17.80
22	2.93	25.56	142.1	3.72	46.33	1.65	16.21	223.2	2.91	34.96
23	3.04	81.72	477.5	2.44	14.42	7.57	83.76	427.5	1.47	15.22
24	1.60	25.72	386.8	6.49	20.53	1.95	20.49	291.8	2.73	26.88
25	1.71	17.76	163.8	3.63	45.02	.66	7.35	242.4	3.82	34.67
26	1.61	31.61	205.7	1.13	34.08	2.55	44.57	301.0	.52	23.41
27	2.41	60.98	416.7	6.42	17.06	4.16	43.35	334.7	3.93	21.33
28	2.58	27.80	159.4	2.80	42.01	1.73	15.82	260.3	2.80	30.53
29	2.49	50.68	463.1	3.93	16.12	6.16	91.85	362.2	.47	16.87
30	2.20	70.30	386.9	3.85	17.60	2.32	23.37	280.2	2.58	27.37
31	1.48	21.07	176.1	4.15	41.50	.77	11.03	329.1	4.43	25.44
32	1.57	34.25	207.7	1.10	33.30	2.99	56.08	258.6	.51	24.92
BAG (CALC.)	2.34	47.48	287.7	4.17	24.01	2.81	33.93	284.3	3.05	25.61
BAG (ACT.)	2.61	47.77	294.7	4.24	23.48	3.00	31.39	270.6	3.09	26.94
33	.44	10.12	29.6	.02	189.29	.36	14.53	32.4	.02	157.34
34	5.27	99.91	380.2	.24	16.02	6.93	145.43	483.7	.25	12.09
35	2.56	45.74	237.5	.24	27.96	3.25	39.66	516.8	.62	15.06
36	2.01	39.34	222.0	.24	30.59	1.88	17.72	321.3	.41	24.99
37	1.21	19.26	248.6	.84	31.39	1.05	5.83	245.3	.98	34.43
38	1.60	23.30	244.1	3.07	31.05	.79	2.45	224.7	2.09	38.42
39	1.74	25.57	292.0	6.77	26.28	.86	3.53	279.1	4.36	30.89

EMISSION RESULTS IN GRAMS PER MILE (PER MINUTE FOR IDLE)
FUEL ECONOMY IN MILES PER GALLON (PER MINUTE FOR IDLE)

APPENDIX H

LISTING OF MODAL RESULTS ON INDIVIDUAL VEHICLES

ST. LOUIS

	VEH	YEAR	MAKE	MODL	CID	VEH	YEAR	MAKE	MODL	CID
	3133	1973	VOLK	SEDA	97	2134	1972	AMC	MATA	258
MODE NO.	HC	CO	CO2	NOXC	FUEL ECONOMY	HC	CO	CO2	NOXC	FUEL ECONOMY
1	6.55	89.06	445.2	1.53	14.65	4.70	18.37	869.8	14.85	9.72
2	1.51	12.47	234.1	1.58	34.34	1.93	13.27	274.4	2.59	29.46
3	4.14	82.07	533.3	.42	13.14	6.52	31.85	842.6	3.01	9.72
4	2.95	15.39	348.0	1.31	23.27	3.38	9.17	614.7	9.70	13.87
5	1.61	8.76	295.3	3.33	28.25	2.55	4.02	550.9	14.08	15.70
6	.65	3.18	168.8	2.90	50.47	1.67	7.38	215.8	3.93	38.15
7	.93	9.16	297.8	5.21	28.16	3.16	22.41	742.1	14.52	11.27
8	.95	11.68	216.1	4.90	37.38	.83	3.88	273.2	7.90	31.48
9	1.15	5.69	320.7	6.69	26.63	1.90	3.48	597.9	16.26	14.56
10	1.48	13.14	153.4	3.57	49.66	2.69	14.06	226.4	5.11	34.53
11	4.09	24.74	382.9	7.98	20.41	2.52	9.92	777.4	21.18	11.08
12	1.50	17.82	179.9	4.31	41.75	3.53	17.78	235.8	5.19	32.28
13	4.65	38.24	357.1	7.11	20.55	2.52	13.29	742.2	21.23	11.51
14	.93	14.34	181.1	4.23	42.95	2.52	8.38	262.7	6.94	31.27
15	1.15	9.98	168.5	1.03	47.25	1.50	11.99	258.2	3.42	31.49
16	4.90	96.09	428.4	.65	14.92	3.84	93.55	437.4	.16	14.88
17	5.26	39.65	362.8	5.80	20.09	2.99	16.30	712.7	17.56	11.87
18	.77	6.57	186.8	3.05	44.48	3.07	16.21	247.1	4.85	31.43
19	3.07	24.25	315.3	3.45	24.44	2.78	14.48	629.1	13.19	13.43
20	1.30	14.51	185.8	2.85	41.72	3.49	20.07	270.6	5.30	28.34
21	6.17	42.77	345.3	5.26	20.54	3.21	20.59	834.2	19.15	10.12
22	1.78	18.84	186.4	4.26	40.04	3.23	17.91	277.0	7.01	28.14
23	4.74	75.25	350.8	1.71	18.33	4.11	40.25	768.9	12.65	10.50
24	1.76	13.18	287.1	4.56	28.32	1.90	6.79	529.8	14.95	16.24
25	.96	13.95	237.9	5.85	33.76	1.67	7.31	337.5	8.19	25.05
26	2.59	32.49	244.4	1.18	29.23	2.56	22.15	403.5	4.25	19.88
27	3.36	25.94	320.1	6.68	23.89	2.59	18.80	604.9	17.57	13.81
28	1.78	19.44	213.4	4.48	35.55	2.99	18.37	335.8	6.93	23.72
29	3.89	60.89	278.9	.78	22.94	4.08	35.57	608.8	11.02	13.10
30	2.35	11.97	275.4	4.31	29.43	2.13	8.56	523.5	13.98	16.32
31	1.01	18.35	241.1	5.55	32.50	1.18	6.29	352.0	8.75	24.27
32	2.15	39.45	196.4	.92	33.47	2.57	23.05	357.7	2.49	22.07
BAG (CALC.)	2.52	24.05	267.7	5.03	28.32	2.41	13.48	469.8	11.76	17.80
BAG (ACT.)	2.74	24.61	260.8	5.22	28.80	2.45	12.32	459.3	11.83	18.25
33	.41	10.33	36.6	.04	164.05	.44	3.15	62.7	.10	128.49
34	3.34	57.42	531.8	.50	14.03	4.16	11.95	755.9	.97	11.26
35	4.80	13.09	484.4	1.15	17.06	2.30	9.42	472.4	.72	17.95
36	3.06	2.82	293.2	.69	28.88	1.83	6.49	370.0	.89	22.99
37	.86	3.03	211.2	1.55	40.59	1.85	8.11	314.8	2.88	26.62
38	.77	2.14	207.6	3.45	41.58	1.71	6.19	363.8	6.44	23.42
39	1.08	7.25	252.8	6.24	33.16	.93	3.30	437.2	11.84	19.93

EMISSION RESULTS IN GRAMS PER MILE (PER MINUTE FOR IDLE)
FUEL ECONOMY IN MILES PER GALLON (PER MINUTE FOR IDLE)

APPENDIX H

LISTING OF MODAL RESULTS ON INDIVIDUAL VEHICLES

ST. LOUIS

	VEH	YEAR	MAKE	MODL	CID	VEH	YEAR	MAKE	MODL	CID
	2135	1972	BUIC	ELEC	455	2136	1972	CADI	CALA	472
MODE NO.	HC	CO	CO2	NOXC	FUEL ECONOMY	HC	CO	CO2	NOXC	FUEL ECONOMY
1	3.62	40.35	1333.8	20.31	6.30	2.51	72.57	1437.7	8.26	5.69
2	.81	28.54	517.3	.84	15.72	.79	12.63	507.7	1.14	16.74
3	3.70	121.08	1371.8	3.08	5.64	3.14	130.06	1556.0	1.01	5.01
4	1.76	16.54	870.0	8.71	9.84	.81	26.64	1055.8	3.92	8.07
5	2.46	6.12	689.6	17.96	12.55	2.03	15.70	762.2	10.15	11.19
6	.90	3.31	313.5	3.56	27.60	2.90	5.17	312.7	2.34	26.89
7	2.59	36.41	974.4	22.81	8.54	2.43	44.10	1108.6	12.77	7.49
8	3.81	3.73	362.4	7.64	23.33	2.06	4.13	402.1	6.60	21.38
9	2.01	6.16	710.1	23.82	12.22	1.57	14.90	827.2	12.29	10.37
10	3.02	8.03	312.8	4.18	26.49	4.31	3.55	345.4	3.65	24.34
11	2.15	13.06	1000.5	29.04	8.64	1.81	45.32	1182.6	13.04	7.05
12	5.01	28.89	321.5	5.24	23.18	4.88	3.87	405.8	5.76	20.77
13	2.11	13.25	981.9	27.28	8.79	1.53	40.33	1101.6	11.57	7.59
14	3.74	15.18	345.3	6.34	23.29	3.19	3.92	449.0	5.44	19.07
15	.60	9.21	474.2	1.93	18.09	.73	13.71	493.9	.93	17.14
16	1.97	64.47	1077.7	.72	7.49	.72	40.89	1028.7	.35	8.10
17	2.73	23.18	992.7	22.68	8.55	1.90	44.90	1037.1	9.82	7.97
18	1.06	9.48	384.6	3.87	22.03	2.68	14.50	496.7	2.36	16.81
19	2.42	26.81	857.8	16.25	9.78	1.39	30.25	924.4	7.37	9.09
20	3.01	41.97	444.9	3.56	17.05	2.92	10.84	527.8	2.69	16.02
21	2.70	47.54	1090.7	24.64	7.56	2.34	77.25	1179.3	11.03	6.78
22	5.14	31.30	369.9	5.93	20.38	4.00	6.19	496.5	5.28	17.11
23	2.80	41.10	1095.0	15.30	7.60	1.31	50.83	1073.5	4.61	7.67
24	2.07	12.24	667.1	17.90	12.81	1.75	30.74	671.6	8.31	12.23
25	4.09	12.31	415.0	8.47	19.84	1.96	7.66	624.6	8.70	13.81
26	1.26	13.16	642.8	2.27	13.30	1.66	25.17	801.5	1.82	10.49
27	2.31	17.57	833.1	22.51	10.22	1.66	38.85	897.4	10.27	9.21
28	2.75	9.30	439.3	7.21	19.18	4.10	7.35	550.4	6.75	15.44
29	2.21	33.15	933.1	10.31	8.95	1.47	54.85	942.6	1.86	8.59
30	2.24	16.12	696.9	18.38	12.17	1.76	31.56	657.2	6.60	12.46
31	3.50	10.78	440.8	10.11	18.93	1.42	8.59	635.3	9.89	13.59
32	.98	19.65	598.0	1.96	14.04	1.53	21.26	662.9	1.77	12.66
BAG (CALC.)	2.24	17.69	625.1	13.68	13.45	2.13	22.82	718.4	7.96	11.66
BAG (ACT.)	2.41	18.71	621.6	13.89	13.48	2.21	23.19	704.7	7.96	11.86
33	.48	14.78	125.8	.11	58.95	.37	9.53	108.9	.04	70.99
34	6.05	171.60	1537.0	1.35	4.86	3.48	86.38	1373.2	.48	5.84
35	1.40	42.79	981.4	.83	8.43	1.38	30.05	823.7	.49	10.14
36	1.29	35.58	624.4	.56	12.97	.56	20.96	748.4	.56	11.33
37	1.09	4.57	407.0	2.74	21.25	1.03	13.56	454.6	1.44	18.52
38	.95	2.84	427.2	6.97	20.42	.65	5.86	498.1	4.38	17.42
39	.90	3.94	509.0	15.58	17.13	.51	4.69	597.5	9.16	14.63

EMISSION RESULTS IN GRAMS PER MILE (PER MINUTE FOR IDLE)
FUEL ECONOMY IN MILES PER GALLON (PER MINUTE FOR IDLE)

APPENDIX H

LISTING OF MODAL RESULTS ON INDIVIDUAL VEHICLES

ST. LOUIS

	VEH	YEAR	MAKE	MODL	CID	VEH	YEAR	MAKE	MODL	CID
	2137	1972	CHEV	VEGA	140	2138	1972	CHEV	STAW	350
MODE NO.	HC	CO	CO2	NOXC	FUEL ECONOMY	HC	CO	CO2	NOXC	FUEL ECONOMY
1	7.29	108.48	565.5	1.20	11.69	5.08	70.82	1006.4	5.88	7.83
2	1.06	8.47	227.8	2.27	36.31	1.19	14.07	551.8	1.23	15.36
3	4.83	65.11	616.8	.45	12.08	6.61	119.61	1042.7	1.85	7.09
4	2.63	37.09	473.1	.59	16.44	2.58	28.87	718.7	2.22	11.49
5	1.29	7.10	327.5	2.62	25.89	1.48	12.25	651.3	3.50	13.14
6	.74	5.53	146.6	3.10	56.31	1.79	14.46	313.5	2.96	25.96
7	2.42	78.26	298.2	1.89	20.69	4.06	36.57	719.1	8.23	11.24
8	.76	9.16	156.7	4.34	51.15	2.34	10.82	355.2	6.60	23.38
9	1.45	7.48	352.2	4.87	24.08	2.55	14.78	564.2	7.78	14.90
10	1.79	8.22	132.2	2.75	58.87	2.74	13.85	303.6	3.83	26.57
11	3.36	103.97	328.4	1.65	17.67	3.30	21.62	823.9	10.97	10.22
12	2.08	9.68	140.4	3.96	54.72	4.10	18.63	362.7	4.53	21.91
13	3.42	98.84	357.0	2.29	16.97	3.07	29.27	774.0	10.56	10.70
14	1.16	9.27	151.9	3.18	52.16	3.59	9.19	310.2	4.63	26.41
15	.94	5.35	174.2	1.75	47.82	1.50	6.86	411.9	0.00	20.76
16	2.93	54.71	290.0	.52	23.04	3.36	0.00	875.3	0.00	10.02
17	4.12	91.99	375.5	2.49	16.65	2.80	32.78	745.8	7.32	11.01
18	1.10	12.16	162.9	2.81	47.84	2.58	16.25	424.3	1.72	19.38
19	2.47	43.90	314.6	2.70	22.67	2.30	24.16	665.3	4.35	12.49
20	1.36	18.46	173.0	3.07	43.02	3.53	23.37	423.0	2.07	18.85
21	4.02	113.70	311.0	1.49	17.66	4.42	71.48	868.0	9.19	8.93
22	2.42	19.05	161.3	2.76	44.63	3.28	18.31	395.8	4.38	20.40
23	5.34	85.24	530.3	2.22	13.03	4.01	66.10	751.5	2.46	10.22
24	1.59	15.83	315.4	3.93	25.70	1.70	7.18	639.1	5.92	13.53
25	1.06	12.95	180.8	3.98	43.39	3.19	10.67	343.8	7.27	23.94
26	1.89	13.07	259.9	2.37	30.99	2.06	9.54	540.0	1.84	15.80
27	2.88	73.69	347.1	2.49	18.80	2.48	19.21	732.6	7.60	11.52
28	2.04	15.35	175.2	2.84	43.13	3.12	18.87	358.9	5.05	22.28
29	4.28	68.55	382.0	1.45	17.64	3.40	64.32	756.5	1.38	10.22
30	2.31	65.20	271.9	2.04	23.25	1.90	6.87	583.7	5.56	14.78
31	1.05	14.84	183.3	4.01	42.28	2.94	13.69	377.6	8.14	21.73
32	1.85	19.34	202.8	1.73	37.13	1.82	10.83	485.0	1.72	17.48
BAG (CALC.)	2.21	39.30	259.2	2.87	27.06	2.76	22.96	557.1	6.04	14.74
BAG (ACT.)	2.46	37.81	255.6	2.95	27.49	2.89	23.85	553.7	6.00	14.78
33	.39	3.77	41.7	.04	181.57	.76	17.79	76.0	.04	83.41
34	5.10	11.79	524.7	1.36	15.87	8.82	188.49	981.5	.51	6.80
35	1.81	7.33	512.7	.80	16.75	2.34	30.86	879.4	.77	9.49
36	1.01	7.12	517.7	.91	16.68	1.83	21.74	556.1	.51	14.89
37	1.09	1.88	187.1	1.67	45.86	1.56	2.27	360.9	1.44	24.03
38	1.15	3.40	209.5	3.75	40.63	2.34	16.16	382.8	3.91	21.35
39	1.25	8.58	240.1	4.86	34.46	2.24	9.50	461.3	8.83	18.36

EMISSION RESULTS IN GRAMS PER MILE (PER MINUTE FOR IDLE)
FUEL ECONOMY IN MILES PER GALLON (PER MINUTE FOR IDLE)

APPENDIX H

LISTING OF MODAL RESULTS ON INDIVIDUAL VEHICLES

ST. LOUIS

	VEH	YEAR	MAKE	MODL	CID	VEH	YEAR	MAKE	MODL	CID
	2139	1972	CHEV	CHEL	350	2140	1972	CHEV	CHEL	307
MODE NO.	HC	CO	CO2	NOXC	FUEL ECONOMY	HC	CO	CO2	NOXC	FUEL ECONOMY
1	4.53	100.42	996.3	5.49	7.60	4.97	80.05	823.5	5.59	9.20
2	1.76	53.00	416.3	1.19	17.57	2.58	43.81	347.4	.85	20.91
3	6.98	210.73	1092.7	1.61	6.14	7.83	193.02	553.3	.92	10.07
4	2.17	48.41	738.9	2.29	10.80	2.85	37.58	610.0	2.32	13.09
5	1.61	18.34	590.0	6.56	14.23	1.56	7.32	518.2	3.25	16.60
6	1.16	13.16	312.2	3.82	26.37	2.34	7.56	259.6	2.84	31.82
7	2.63	25.70	721.2	11.86	11.53	5.41	137.45	600.3	4.41	10.65
8	1.87	13.87	301.5	6.32	26.96	1.89	4.71	321.8	5.81	26.48
9	1.83	16.10	537.1	10.97	15.62	2.16	14.76	501.1	8.36	16.71
10	1.43	20.99	308.5	4.19	25.65	3.18	13.28	244.4	3.47	32.23
11	2.38	30.20	763.5	12.14	10.84	4.04	94.38	643.4	5.91	11.03
12	2.37	31.00	309.5	5.08	24.27	5.40	20.96	275.3	4.35	27.28
13	2.50	38.82	757.1	10.92	10.75	4.21	51.37	670.0	6.98	11.62
14	1.82	16.55	293.6	4.85	27.28	2.95	23.27	273.8	4.41	27.76
15	2.34	48.74	365.7	1.26	19.74	2.63	96.02	309.3	1.13	18.94
16	6.52	180.80	680.5	2.04	9.01	7.50	218.54	599.1	.76	9.18
17	2.53	42.30	751.6	8.77	10.74	3.46	18.79	650.5	6.93	12.84
18	1.10	22.22	382.9	2.95	21.07	2.93	47.67	315.5	1.93	22.20
19	2.07	38.57	657.9	7.44	12.24	2.86	31.10	549.7	4.55	14.61
20	1.45	27.59	418.8	3.10	19.02	3.68	51.24	390.7	1.73	18.38
21	3.06	48.43	790.6	13.66	10.13	5.85	188.64	621.6	3.64	9.48
22	1.96	29.39	340.3	4.84	22.60	4.73	35.83	335.3	3.96	21.83
23	3.43	95.71	784.6	6.05	9.38	5.22	57.84	629.1	3.76	12.05
24	1.68	19.86	570.5	8.79	14.62	1.82	10.41	485.3	6.53	17.49
25	1.74	15.87	323.6	7.08	25.07	2.18	25.07	350.8	5.53	22.35
26	2.42	64.42	522.5	1.49	14.06	3.79	107.79	483.4	1.41	13.35
27	1.92	33.21	671.7	9.12	12.16	2.42	17.58	576.7	7.38	14.50
28	1.80	30.58	371.5	5.38	20.87	4.25	37.16	325.2	4.52	22.35
29	3.52	93.39	630.7	3.88	11.25	4.57	56.55	474.3	3.69	15.37
30	1.79	24.30	628.0	9.28	13.21	2.60	60.33	494.4	5.30	14.86
31	1.89	18.80	375.8	8.65	21.58	2.08	27.87	389.6	6.57	20.17
32	2.51	78.81	380.4	1.45	17.33	3.96	96.02	450.5	1.38	14.46
BAG (CALC.)	2.01	32.89	506.4	7.23	15.72	3.25	40.02	458.4	5.04	16.70
BAG (ACT.)	2.19	31.65	499.4	7.11	15.96	3.56	39.63	451.6	5.04	16.90
33	.79	24.40	61.1	.04	87.04	.94	23.54	55.1	.04	93.35
34	9.89	272.68	782.0	.51	7.15	11.26	267.86	661.4	.49	7.94
35	4.61	129.06	719.7	.50	9.47	3.42	60.61	671.0	.49	11.42
36	2.99	88.66	463.9	.33	14.48	3.35	71.73	402.2	.32	16.89
37	1.96	29.78	337.8	1.05	22.71	1.77	14.76	306.9	.81	26.44
38	.98	2.49	381.8	4.17	22.82	1.58	3.74	326.5	4.46	26.30
39	1.32	7.86	423.1	8.65	20.19	1.28	4.04	386.4	7.38	22.36

EMISSION RESULTS IN GRAMS PER MILE (PER MINUTE FOR IDLE)
FUEL ECONOMY IN MILES PER GALLON (PER MINUTE FOR IDLE)

APPENDIX H

LISTING OF MODAL RESULTS ON INDIVIDUAL VEHICLES

ST. LOUIS

	VEH	YEAR	MAKE	MODL	CID	VEH	YEAR	MAKE	MODL	CID
	2141	1972	CHEV	STAW	350	2142	1972	CHEV	CAPR	400
MODE NO.	HC	CO	CO2	NOXC	FUEL ECONOMY	HC	CO	CO2	NOXC	FUEL ECONOMY
1	7.54	137.52	1072.1	11.20	6.76	5.64	56.01	1250.7	22.96	6.54
2	1.35	17.97	366.6	2.66	22.24	2.53	69.72	397.2	.31	17.24
3	7.37	186.80	1089.5	4.09	6.31	8.33	163.00	1249.3	13.15	5.79
4	5.54	84.41	726.3	6.46	10.13	3.71	43.02	865.3	13.58	9.40
5	3.87	60.64	712.3	7.25	10.83	2.46	12.14	708.7	14.56	12.07
6	2.19	26.88	291.7	3.18	26.04	1.50	14.16	258.0	2.02	31.15
7	7.29	260.30	843.8	5.32	6.96	3.60	25.92	1026.0	20.89	8.23
8	4.59	16.09	362.7	6.94	22.05	2.58	6.62	281.4	3.42	29.58
9	3.53	58.34	764.8	11.80	10.23	1.87	7.60	751.2	17.88	11.54
10	3.89	27.72	257.8	4.31	28.29	3.10	25.86	279.6	2.30	26.89
11	5.39	156.30	858.1	9.35	7.92	2.93	20.07	961.4	21.89	8.86
12	5.41	30.00	304.7	6.06	24.06	4.21	37.17	276.7	2.78	25.47
13	5.32	156.99	844.8	10.77	8.01	2.93	23.49	979.3	20.29	8.65
14	4.17	22.61	381.6	5.29	20.62	3.10	17.01	306.8	4.02	25.85
15	1.51	10.32	361.6	3.12	23.20	2.41	60.37	340.1	.49	20.05
16	4.76	112.67	625.8	0.00	10.85	5.84	231.23	733.8	.02	7.96
17	5.54	114.31	814.3	10.61	8.77	3.37	30.20	943.2	18.58	8.86
18	2.85	45.57	318.2	3.49	22.25	2.00	27.82	295.1	2.30	25.71
19	4.92	93.68	755.8	8.45	9.66	2.96	35.76	869.8	15.59	9.49
20	2.97	42.38	375.8	3.59	19.64	2.39	41.17	328.0	2.31	22.17
21	7.82	313.93	863.3	7.07	6.42	3.45	31.42	1101.4	22.64	7.64
22	4.84	31.45	381.1	5.40	19.91	3.84	35.25	323.5	3.84	22.69
23	6.63	92.18	870.5	10.35	8.56	5.04	81.69	941.9	16.10	8.17
24	3.64	42.30	699.7	10.01	11.41	2.15	17.98	652.1	14.01	12.92
25	4.89	27.31	347.5	6.28	21.87	2.82	9.44	369.5	6.34	22.57
26	1.99	9.96	417.8	2.86	20.18	3.92	96.57	542.8	1.10	12.55
27	4.48	95.89	757.2	10.45	9.63	2.67	21.77	759.9	17.24	11.06
28	4.34	39.49	387.8	5.36	19.15	3.46	32.71	394.2	5.34	19.44
29	7.01	129.01	530.8	4.00	11.74	5.06	80.35	760.0	10.76	9.84
30	5.64	109.25	643.1	7.09	10.66	2.24	21.20	670.8	14.39	12.48
31	4.62	34.45	410.4	7.47	18.52	2.13	8.88	396.4	7.04	21.28
32	1.46	19.65	483.3	1.98	17.11	3.97	83.83	417.9	1.14	15.79
BAG (CALC.)	3.93	77.60	562.2	6.97	12.74	2.84	31.03	580.1	10.22	13.91
BAG (ACT.)	4.09	78.27	552.0	6.80	12.90	3.04	32.41	576.7	10.18	13.93
33	.64	14.45	75.8	.05	88.29	.94	23.14	95.3	.06	65.91
34	7.07	137.96	976.5	.57	7.30	10.52	247.78	1169.2	.74	5.58
35	2.04	27.15	929.0	1.01	9.07	5.18	138.97	755.4	.50	8.96
36	1.53	16.86	619.7	.77	13.63	3.57	89.71	494.5	.41	13.72
37	1.55	2.83	397.3	2.35	21.83	2.44	25.72	364.7	1.40	21.49
38	2.52	36.49	406.0	4.70	18.83	1.27	3.40	407.7	5.16	21.28
39	2.26	15.22	509.9	11.77	16.40	1.49	5.03	497.1	12.04	17.41

EMISSION RESULTS IN GRAMS PER MILE (PER MINUTE FOR IDLE)
FUEL ECONOMY IN MILES PER GALLON (PER MINUTE FOR IDLE)

APPENDIX H

LISTING OF MODAL RESULTS ON INDIVIDUAL VEHICLES

ST. LOUIS

	VEH	YEAR	MAKE	MODL	CID	VEH	YEAR	MAKE	MODL	CID
	2143	1972	DODG	CHAR	318	2144	1972	FORD	PINT	122
MODE NO.	HC	CO	CO2	NOXC	FUEL ECONOMY	HC	CO	CO2	NOXC	FUEL ECONOMY
1	5.96	18.45	961.0	9.39	8.80	8.39	82.97	463.3	6.18	14.31
2	1.12	3.14	419.4	.79	20.74	9.22	17.24	258.1	3.80	28.23
3	4.51	16.76	1239.3	1.30	6.93	14.31	126.28	489.6	1.17	12.10
4	3.23	3.94	673.8	5.77	12.86	5.81	16.78	310.6	3.33	24.98
5	2.76	3.09	563.1	6.95	15.39	7.41	16.81	329.7	8.29	23.38
6	1.79	2.62	234.5	3.61	36.33	2.08	6.86	178.9	4.76	45.22
7	3.87	13.56	731.3	13.18	11.60	3.63	60.48	336.5	7.80	20.03
8	2.08	5.09	295.0	6.41	28.67	2.53	23.54	225.0	6.27	32.87
9	2.94	6.91	584.9	10.68	14.67	2.41	16.43	334.0	11.00	24.16
10	2.59	4.60	274.5	4.09	30.61	5.99	16.71	168.6	5.08	41.50
11	4.01	19.24	749.3	14.13	11.20	4.19	87.24	368.9	9.80	17.09
12	3.61	5.96	278.1	4.88	29.70	5.31	20.30	197.8	5.62	35.99
13	3.92	17.33	743.6	13.17	11.33	4.30	84.35	368.9	9.43	17.23
14	2.67	5.07	290.6	5.64	28.90	2.69	17.18	203.9	6.15	37.07
15	1.19	3.94	348.7	.57	24.74	4.51	5.31	232.0	3.13	34.85
16	1.48	22.64	635.3	.19	13.14	5.49	26.17	491.1	.97	16.15
17	4.05	14.55	741.1	11.27	11.43	5.67	68.36	369.6	7.65	17.93
18	1.97	3.86	296.4	3.69	28.75	2.43	10.02	209.7	6.07	38.07
19	3.09	11.18	615.2	7.84	13.81	4.01	20.76	316.5	6.51	24.53
20	2.27	4.22	331.8	3.90	25.68	3.17	11.88	227.2	6.35	34.68
21	4.50	31.35	804.2	14.49	10.23	6.26	114.12	347.5	5.41	16.23
22	2.96	6.63	323.9	5.78	25.82	5.13	22.68	215.2	5.83	33.23
23	4.55	16.24	783.6	7.27	10.78	9.08	77.93	378.6	5.46	16.75
24	2.77	6.94	512.7	8.71	16.67	4.19	24.94	291.1	7.55	25.83
25	2.50	6.80	364.8	7.89	23.15	3.35	19.92	250.2	8.40	30.38
26	1.65	5.42	550.5	1.19	15.73	9.17	11.28	299.0	4.81	25.67
27	3.05	10.65	628.2	10.81	13.56	3.80	50.24	342.9	9.41	20.46
28	2.70	6.57	348.8	5.95	24.14	5.80	22.39	232.8	6.86	30.99
29	3.66	17.88	625.9	4.62	13.33	6.63	52.88	330.6	5.11	20.42
30	2.78	10.05	508.5	7.48	16.65	3.59	42.11	294.9	8.02	23.83
31	2.57	6.40	377.4	8.99	22.43	2.60	24.02	294.5	9.41	26.07
32	1.63	5.19	492.7	1.16	17.54	5.48	12.06	255.1	4.42	30.46
BAG (CALC.)	2.81	9.42	493.8	8.04	17.15	4.47	39.06	285.9	7.49	24.56
BAG (ACT.)	2.91	10.46	490.2	8.44	17.20	4.68	38.81	289.5	7.44	24.30
33	.38	3.17	88.6	.07	93.64	.60	10.30	34.3	.02	169.28
34	3.97	27.23	1090.4	.86	7.75	6.96	56.54	532.3	.29	13.80
35	1.91	12.31	569.0	.44	14.93	43.90	20.11	445.6	2.84	14.40
36	1.23	5.53	470.6	.59	18.37	7.23	4.13	289.2	.66	27.86
37	1.15	2.38	343.9	.96	25.26	12.83	9.10	229.5	4.46	31.20
38	2.02	3.16	332.6	5.33	25.80	2.06	4.71	224.9	6.09	37.16
39	2.33	7.52	402.8	9.75	21.03	2.29	23.30	273.0	8.00	28.01

EMISSION RESULTS IN GRAMS PER MILE (PER MINUTE FOR IDLE)
FUEL ECONOMY IN MILES PER GALLON (PER MINUTE FOR IDLE)

APPENDIX H

LISTING OF MODAL RESULTS ON INDIVIDUAL VEHICLES

ST. LOUIS

	VEH	YEAR	MAKE	MODL	CID	VEH	YEAR	MAKE	MODL	CID
	2145	1972	FORD	TORI	351	2146	1972	FORD	MAVE	200
MODE NO.	HC	CO	CO2	NOXC	FUEL ECONOMY	HC	CO	CO2	NOXC	FUEL ECONOMY
1	4.90	93.23	1047.7	11.69	7.34	5.28	75.18	670.9	14.08	11.01
2	1.41	55.94	387.5	.90	18.49	1.59	27.34	235.3	3.57	31.32
3	6.59	201.47	1153.0	1.80	5.95	5.52	120.27	565.6	1.45	11.49
4	2.22	22.22	711.9	4.55	11.77	2.81	18.17	488.7	8.25	16.87
5	2.06	19.01	619.6	7.66	13.53	2.08	2.96	406.4	12.27	21.25
6	3.77	12.03	259.1	3.05	30.61	1.27	3.77	165.4	5.61	50.60
7	3.35	92.57	801.5	8.73	9.27	2.93	35.92	552.0	12.94	14.37
8	3.76	12.04	246.5	7.74	32.00	1.09	2.86	193.7	7.79	44.03
9	2.26	15.24	623.1	12.25	13.57	1.86	1.95	444.8	15.13	19.56
10	4.85	21.59	238.4	4.76	30.84	2.15	10.56	164.6	5.14	47.20
11	2.79	25.88	816.5	16.69	10.25	2.61	18.71	568.4	15.69	14.64
12	7.15	29.76	244.7	6.43	28.25	3.14	14.50	158.1	6.23	46.49
13	3.00	36.74	778.1	16.09	10.50	2.57	20.29	538.1	15.79	15.35
14	4.63	16.15	275.6	6.75	28.11	2.01	5.92	197.6	7.19	41.61
15	1.45	12.47	391.3	1.24	21.36	1.61	16.45	205.2	2.39	37.58
16	3.20	99.61	771.6	.96	9.46	3.93	116.71	337.0	.01	16.66
17	3.24	66.11	755.8	11.68	10.20	3.02	31.13	515.5	16.15	15.46
18	4.39	22.79	289.5	2.99	26.17	1.94	10.08	185.8	6.63	42.71
19	2.36	33.58	715.4	7.48	11.44	2.39	23.49	438.9	10.75	18.36
20	5.16	36.73	325.7	3.19	22.20	2.40	14.51	221.2	6.76	35.28
21	3.65	93.83	868.7	11.97	8.64	3.17	40.13	605.6	14.94	13.08
22	6.02	29.01	294.5	6.79	24.71	2.74	13.06	192.9	7.42	39.95
23	3.87	89.23	839.2	6.22	8.95	4.32	72.61	517.3	11.91	13.76
24	1.84	18.95	584.8	9.36	14.31	1.78	5.24	378.6	11.98	22.61
25	2.86	17.19	331.0	8.86	24.18	1.26	3.37	251.2	10.09	34.07
26	2.63	43.04	552.9	1.49	14.11	2.19	20.50	312.2	4.27	25.26
27	2.75	38.10	662.2	12.83	12.15	2.34	19.96	440.6	14.31	18.51
28	5.36	30.65	334.6	6.90	22.20	2.60	15.45	224.4	7.68	34.54
29	3.31	88.62	684.3	4.65	10.64	4.06	75.52	389.3	6.15	17.04
30	1.87	25.03	622.9	8.39	13.28	2.16	16.30	378.3	9.29	21.61
31	2.53	14.70	328.1	10.48	24.71	1.06	2.88	264.7	11.13	32.56
32	2.54	38.46	518.4	1.60	15.12	2.18	26.99	275.5	3.02	27.32
BAG (CALC.)	3.27	34.94	508.3	9.01	15.47	2.24	18.03	337.3	10.47	23.81
BAG (ACT.)	3.47	36.23	508.3	9.08	15.40	2.36	19.22	340.9	10.47	23.44
33	.72	31.23	71.8	.06	72.08	.55	14.69	41.8	.02	133.25
34	7.58	335.78	975.2	.73	5.81	5.63	131.41	525.9	.30	11.83
35	2.87	83.29	758.1	.97	9.88	2.33	35.67	465.3	.44	16.79
36	3.66	11.12	670.1	1.78	12.69	1.61	20.61	326.6	.39	24.38
37	.70	5.16	418.6	1.20	20.69	1.56	4.43	238.7	3.49	35.42
38	1.31	6.99	367.3	5.08	23.21	1.50	1.99	272.1	8.91	31.70
39	1.70	13.72	441.2	12.15	18.96	1.13	2.14	315.1	13.34	27.56

EMISSION RESULTS IN GRAMS PER MILE (PER MINUTE FOR IDLE)
FUEL ECONOMY IN MILES PER GALLON (PER MINUTE FOR IDLE)

APPENDIX H

LISTING OF MODAL RESULTS ON INDIVIDUAL VEHICLES

ST. LOUIS

	VEH	YEAR	MAKE	MODL	CID	VEH	YEAR	MAKE	MODL	CID
	2147	1972	FORD	STAW	400	2148	1972	FORD	LTD	400
MODE NO.	HC	CO	CO2	NOXC	FUEL ECONOMY	HC	CO	CO2	NOXC	FUEL ECONOMY
1	4.55	122.41	1152.4	12.84	6.53	5.95	97.44	1195.9	11.38	6.49
2	4.03	85.52	498.4	.97	13.75	1.76	88.08	425.4	.76	15.59
3	6.15	247.75	1246.0	6.04	5.36	4.27	174.83	1343.5	3.79	5.44
4	3.13	95.12	764.2	7.47	9.61	3.60	70.18	809.3	7.48	9.53
5	1.64	30.05	700.2	8.49	11.79	2.86	30.07	665.9	9.73	12.29
6	4.66	32.46	281.2	1.50	25.58	1.24	25.49	269.1	2.40	28.35
7	2.53	42.22	962.8	14.94	8.56	3.23	39.02	969.8	18.00	8.52
8	6.52	23.35	342.4	3.28	22.20	3.17	16.36	332.1	5.35	24.13
9	1.49	19.34	796.0	12.88	10.68	2.74	16.60	725.6	15.96	11.67
10	4.58	36.38	332.3	2.15	21.97	2.60	35.31	272.9	3.67	26.36
11	1.90	37.34	1028.6	15.07	8.12	3.18	29.21	953.1	21.94	8.80
12	5.06	48.24	356.6	1.98	19.79	4.05	42.01	336.0	4.61	21.39
13	1.75	31.62	1039.8	14.10	8.11	3.21	36.61	902.2	19.33	9.15
14	2.54	32.09	315.5	3.31	23.73	2.78	24.03	307.3	4.84	25.08
15	1.86	52.22	383.2	1.34	18.84	1.10	27.13	398.3	.88	19.97
16	4.97	292.22	499.2	.65	9.11	8.48	299.52	694.9	0.00	7.44
17	2.91	83.68	940.2	11.37	8.21	3.96	82.14	875.4	11.94	8.73
18	1.64	42.11	334.2	1.78	21.88	1.40	32.51	308.9	2.96	24.35
19	2.49	69.30	959.8	10.14	8.24	3.44	68.76	743.6	9.25	10.29
20	2.18	57.54	400.7	1.91	17.82	1.82	55.14	337.1	2.57	20.67
21	2.28	49.08	1156.8	16.77	7.15	3.16	41.60	1006.4	21.37	8.20
22	2.53	49.75	372.9	3.30	19.33	3.19	38.65	338.9	4.79	21.66
23	4.06	123.02	1041.8	9.11	7.11	4.35	89.69	979.4	8.25	7.83
24	1.44	23.25	707.6	9.50	11.85	2.22	25.81	615.5	10.68	13.38
25	2.05	26.06	382.7	4.12	20.63	3.18	25.36	352.4	6.66	22.06
26	1.85	65.56	683.1	1.94	11.21	1.41	22.27	548.9	1.11	15.09
27	1.83	43.58	850.0	10.93	9.60	3.03	44.24	740.3	14.13	10.83
28	1.92	47.62	403.0	3.59	18.34	2.81	40.61	388.6	4.76	19.24
29	3.33	121.00	879.6	6.30	8.22	3.56	97.81	793.7	5.65	9.26
30	1.62	31.15	798.4	9.68	10.41	2.04	28.80	668.9	7.60	12.32
31	3.21	32.34	378.1	4.71	20.21	3.60	22.29	361.9	7.54	21.73
32	1.82	70.01	534.4	1.67	13.65	1.94	55.45	528.4	1.47	14.28
BAG (CALC.)	2.27	45.68	625.7	6.90	12.59	2.63	40.73	565.2	9.26	13.92
BAG (ACT.)	2.33	47.78	625.7	7.27	12.53	2.87	41.97	565.2	9.48	13.86
33	.87	32.61	111.8	.10	53.53	.80	30.49	111.3	.08	54.86
34	9.55	334.21	1393.0	1.20	4.56	9.86	366.38	1337.6	1.00	4.56
35	4.52	153.04	718.1	.60	9.12	4.92	177.71	667.3	.50	9.22
36	2.84	91.32	508.2	.50	13.43	3.30	118.43	452.2	.34	13.68
37	.52	3.94	480.6	1.20	18.17	.94	7.36	421.1	.96	20.37
38	.86	5.26	449.1	3.47	19.29	1.37	9.18	403.4	4.77	21.02
39	1.08	11.38	531.2	7.49	16.06	1.93	20.86	474.8	9.99	17.28

EMISSION RESULTS IN GRAMS PER MILE (PER MINUTE FOR IDLE)
FUEL ECONOMY IN MILES PER GALLON (PER MINUTE FOR IDLE)

APPENDIX H

LISTING OF MODAL RESULTS ON INDIVIDUAL VEHICLES

ST. LOUIS

	VEH	YEAR	MAKE	MODL	CID	VEH	YEAR	MAKE	MODL	CID
	2149	1972	MERC	MONR	400	2150	1972	OLDS	CUTL	350
MODE NO.	HC	CO	CO2	NOXC	FUEL ECONOMY	HC	CO	CO2	NOXC	FUEL ECONOMY
1	4.47	36.51	1220.3	28.39	6.87	4.67	114.57	919.5	5.73	7.96
2	2.08	8.46	502.9	1.52	16.98	1.26	25.68	460.6	.59	17.58
3	4.88	30.84	1072.8	13.68	7.81	4.14	96.14	1148.8	1.41	6.76
4	2.80	17.90	804.6	16.67	10.55	3.10	79.09	729.4	2.03	10.28
5	2.18	9.74	674.1	16.78	12.75	2.20	30.27	674.5	5.19	12.17
6	2.59	4.24	255.1	1.88	32.88	.81	14.09	255.3	1.42	31.70
7	2.60	10.77	949.0	37.45	9.11	4.49	179.21	730.6	6.25	8.65
8	3.82	6.02	339.7	4.17	24.57	1.26	6.10	285.1	2.45	29.72
9	2.22	14.96	713.5	23.97	11.93	1.72	18.93	711.2	7.90	11.89
10	2.64	7.24	293.5	2.62	28.33	2.02	9.55	299.0	1.51	27.70
11	2.72	19.11	904.6	32.92	9.41	2.35	36.82	821.6	12.14	10.01
12	4.41	9.70	304.6	3.39	26.58	3.05	20.64	253.8	1.97	29.99
13	2.87	22.98	922.2	28.31	9.17	2.16	41.13	833.0	11.18	9.81
14	2.83	6.68	265.9	4.01	31.11	2.82	11.49	293.9	1.69	27.66
15	2.11	8.31	362.1	1.74	23.24	1.09	34.00	351.2	.92	21.75
16	3.98	13.82	1015.6	5.55	8.45	4.38	74.07	696.7	.91	10.73
17	3.16	31.97	927.9	23.15	8.98	2.97	73.75	808.2	8.32	9.51
18	2.54	5.78	294.5	2.43	28.48	1.08	28.22	256.1	1.45	29.21
19	3.05	32.14	854.4	20.14	9.70	2.94	68.84	827.7	7.88	9.39
20	3.11	7.45	368.5	2.77	22.75	1.31	32.94	306.4	1.20	24.50
21	3.16	17.89	1077.9	38.88	7.95	4.00	151.05	875.2	8.45	7.89
22	3.42	7.97	318.4	4.40	25.97	2.82	16.95	293.5	1.76	26.97
23	4.07	38.99	1029.3	18.29	8.04	3.74	126.39	804.9	2.64	8.74
24	2.06	15.38	676.7	19.72	12.55	2.14	33.64	647.9	7.57	12.54
25	3.15	7.14	309.4	4.54	26.85	2.66	17.87	327.5	2.07	24.38
26	2.71	16.64	479.7	2.52	17.25	2.58	58.25	516.0	1.06	14.42
27	2.55	26.50	778.9	22.84	10.71	2.51	47.79	671.9	8.69	11.76
28	3.11	8.70	371.3	4.09	22.48	2.03	26.29	323.5	1.42	23.91
29	3.39	31.95	899.0	15.90	9.25	4.13	147.04	708.1	2.24	9.32
30	2.39	17.69	774.1	22.95	10.96	2.42	57.83	719.8	8.33	10.85
31	3.71	7.43	303.2	5.50	27.17	2.64	23.28	324.6	1.98	24.02
32	2.53	13.45	496.9	1.64	16.87	1.70	43.63	447.9	.69	17.01
BAG (CALC.)	2.32	12.85	566.0	12.88	14.95	2.17	40.12	516.8	4.45	15.13
BAG (ACT.)	2.28	12.81	566.0	12.75	14.96	2.31	40.71	520.1	4.66	15.01
33	.59	2.15	132.4	.74	64.45	.36	3.84	103.6	.09	80.11
34	6.68	12.68	1589.5	6.41	5.44	3.43	17.90	1244.3	1.09	6.92
35	3.22	5.71	792.4	3.72	10.94	1.39	8.42	642.6	.54	13.44
36	2.17	4.47	529.8	2.29	16.32	.72	3.52	586.5	.65	14.93
37	.95	1.93	332.3	1.96	26.24	.59	3.48	422.0	.95	20.67
38	.64	3.47	405.6	5.11	21.49	.49	3.85	449.2	2.27	19.43
39	1.04	6.80	471.3	11.18	18.29	.71	13.38	487.5	3.57	17.38

EMISSION RESULTS IN GRAMS PER MILE (PER MINUTE FOR IDLE)
FUEL ECONOMY IN MILES PER GALLON (PER MINUTE FOR IDLE)

APPENDIX H

LISTING OF MODAL RESULTS ON INDIVIDUAL VEHICLES

ST. LOUIS

	VEH	YEAR	MAKE	MODL	CID	VEH	YEAR	MAKE	MODL	CID
	2151	1972	PLYM	DUST	225	2152	1972	PLYM	FRY3	360
MODE NO.	HC	CO	CO2	NOXC	FUEL ECONOMY	HC	CO	CO2	NOXC	FUEL ECONOMY
1	4.32	105.48	803.9	11.20	9.03	8.32	192.11	852.4	8.42	7.52
2	1.26	18.20	179.8	1.53	41.79	5.44	133.87	294.5	.85	17.00
3	5.18	137.07	739.3	3.91	9.14	12.01	347.58	757.4	2.34	6.62
4	3.15	77.32	514.5	6.44	13.74	4.46	97.42	676.8	4.97	10.51
5	2.12	46.13	477.2	8.28	15.95	3.58	63.02	556.8	6.37	13.30
6	1.20	20.21	121.2	1.92	56.60	4.02	24.83	272.6	4.40	27.36
7	3.06	125.10	593.9	7.98	11.09	3.98	65.64	786.1	10.83	9.84
8	1.14	18.15	192.5	4.66	39.52	3.56	36.23	336.5	6.11	21.93
9	1.78	38.08	506.5	11.69	15.52	2.73	23.31	620.2	9.62	13.34
10	2.17	22.98	162.6	2.77	43.17	5.61	45.39	242.7	4.20	26.75
11	2.28	54.93	596.9	13.92	12.85	3.95	87.04	837.2	12.10	9.00
12	2.75	25.08	146.6	3.03	45.58	8.52	61.01	273.2	5.50	22.41
13	2.48	56.75	608.9	13.37	12.57	4.40	89.97	779.7	11.33	9.49
14	2.29	21.99	147.6	3.95	46.86	5.30	40.97	325.9	5.07	21.80
15	1.17	8.60	184.1	2.16	44.09	3.47	109.49	261.2	.51	19.98
16	2.38	63.99	414.7	.78	16.98	6.41	304.13	616.1	.31	7.96
17	3.10	77.66	604.5	10.07	12.05	5.27	106.84	768.2	9.19	9.31
18	2.13	23.29	114.2	2.37	56.35	5.18	40.92	287.6	4.41	24.10
19	2.79	74.48	554.3	8.57	13.05	4.04	89.97	652.7	6.82	11.00
20	2.45	30.02	130.7	2.51	47.80	7.51	62.57	336.9	4.88	19.33
21	3.73	152.74	618.5	7.78	10.20	4.89	98.53	876.7	10.62	8.48
22	2.81	31.76	163.4	3.71	39.93	7.31	65.84	326.6	5.25	19.58
23	4.02	121.14	664.7	.07	10.23	6.43	148.63	657.6	5.03	9.74
24	2.01	45.77	477.3	3.67	15.97	3.17	57.44	517.7	7.36	14.36
25	2.11	24.35	165.9	10.03	42.09	4.00	40.08	340.2	6.19	21.34
26	1.36	17.93	158.7	2.29	46.42	5.72	161.14	492.6	1.91	11.62
27	2.26	56.73	515.7	6.00	14.50	4.15	79.03	678.2	9.83	10.88
28	2.30	32.47	180.4	8.06	37.18	6.66	66.21	326.6	4.97	19.65
29	3.44	97.62	507.4	0.00	13.21	6.11	134.71	669.2	3.17	9.86
30	2.07	43.35	506.7	2.82	15.27	2.92	72.23	496.3	6.12	14.34
31	2.12	32.60	160.8	10.48	40.58	3.42	40.13	418.0	7.35	18.04
32	1.61	27.80	196.9	2.01	36.12	5.77	159.93	403.8	.86	13.18
BAG (CALC.)	2.08	45.72	344.6	6.78	20.98	4.77	74.57	501.2	7.42	14.01
BAG (ACT.)	2.28	43.39	344.6	7.00	21.13	5.04	75.41	487.6	7.38	14.27
33	.56	11.60	42.5	.04	142.14	1.77	43.05	59.1	.04	67.02
34	5.97	119.86	533.8	.25	11.98	17.12	499.35	734.8	.47	5.64
35	3.24	42.12	450.9	.61	16.83	6.24	266.24	673.3	.46	7.99
36	2.21	28.81	269.8	.41	27.56	4.11	178.74	464.2	.38	11.71
37	1.24	6.57	243.0	3.04	34.50	3.26	80.61	292.7	.69	20.65
38	1.37	26.67	272.8	4.47	27.82	1.95	9.71	385.1	5.78	21.83
39	1.28	27.10	327.1	8.29	23.75	2.40	30.40	436.9	8.53	18.03

EMISSION RESULTS IN GRAMS PER MILE (PER MINUTE FOR IDLE)
FUEL ECONOMY IN MILES PER GALLON (PER MINUTE FOR IDLE)

APPENDIX H

LISTING OF MODAL RESULTS ON INDIVIDUAL VEHICLES

ST. LOUIS

	VEH	YEAR	MAKE	MODL	CID	VEH	YEAR	MAKE	MODL	CID
	2153	1972	PONT	GRNV	400	2154	1972	PONT	FIRE	350
MODE NO.	HC	CO	CO2	NOXC	FUEL ECONOMY	HC	CO	CO2	NOXC	FUEL ECONOMY
1	7.11	49.99	1428.9	28.28	5.80	3.38	38.59	1398.6	5.17	6.04
2	4.18	23.09	426.1	2.47	18.66	1.41	22.85	498.3	1.25	16.48
3	8.70	95.49	1505.3	4.56	5.27	8.18	137.85	1585.7	3.13	4.85
4	4.75	33.14	938.9	14.87	8.82	1.82	26.20	991.2	2.88	8.55
5	2.53	3.55	798.2	18.89	10.93	1.55	7.72	770.3	5.47	11.27
6	2.00	5.23	305.0	3.36	27.78	1.03	9.91	266.3	1.87	31.13
7	3.16	9.76	1108.5	26.71	7.83	3.49	43.26	881.9	9.61	9.24
8	2.24	4.07	266.7	5.50	31.67	1.55	7.86	271.9	4.43	30.70
9	2.14	4.42	817.8	21.77	10.67	1.97	8.70	684.3	10.11	12.60
10	3.20	12.33	316.4	3.92	25.65	1.33	11.27	312.6	2.85	26.53
11	3.02	12.95	1054.8	29.46	8.18	2.52	21.38	901.4	12.45	9.41
12	4.20	16.57	283.6	4.52	27.48	1.99	16.30	323.0	3.63	25.00
13	3.12	12.29	1041.6	28.47	8.29	2.62	23.72	921.9	10.89	9.17
14	3.09	11.19	338.5	5.14	24.26	1.39	12.66	301.1	4.24	27.27
15	2.83	9.27	378.3	2.41	22.09	1.74	8.24	334.1	1.33	25.17
16	9.77	87.52	973.6	1.71	7.77	3.33	0.00	979.3	1.90	8.97
17	3.07	22.24	1060.9	18.02	8.03	2.67	33.18	964.5	7.76	8.66
18	3.68	9.35	340.2	3.86	24.21	1.34	14.26	330.7	2.59	24.84
19	4.03	23.68	914.1	22.80	9.21	2.15	26.70	889.8	5.14	9.46
20	5.20	13.46	397.7	3.88	20.39	1.90	26.27	382.4	2.63	20.65
21	3.28	19.68	1183.0	27.32	7.25	3.67	55.99	1012.4	9.76	7.98
22	3.94	17.00	363.6	4.91	22.03	1.77	18.09	359.6	3.88	22.55
23	3.39	44.42	1318.3	11.05	6.34	3.58	51.93	1093.7	4.65	7.48
24	2.02	3.75	799.8	19.98	10.93	1.88	11.85	632.8	7.04	13.50
25	3.09	6.93	373.4	5.52	22.53	1.85	13.25	366.1	4.98	22.59
26	3.58	17.37	614.7	2.58	13.58	2.56	20.60	626.5	2.31	13.31
27	2.42	14.15	922.4	22.87	9.32	2.55	21.90	748.9	9.30	11.21
28	3.66	12.01	384.5	4.12	21.39	1.81	20.02	396.5	3.80	20.46
29	3.01	51.33	1095.6	8.03	7.48	3.03	51.26	924.8	2.71	8.74
30	2.38	3.98	932.4	21.55	9.38	1.68	15.18	628.2	5.26	13.50
31	3.32	7.57	380.9	6.48	22.01	1.92	16.80	395.4	6.02	20.74
32	3.65	25.45	577.7	2.19	14.10	2.78	26.15	541.5	2.32	15.01
BAG (CALC.)	2.79	14.44	654.9	12.81	12.93	2.07	21.22	592.2	6.31	14.04
BAG (ACT.)	2.92	14.64	654.9	12.45	12.92	2.26	21.59	571.8	6.31	14.48
33	.84	16.45	122.6	.06	58.72	.81	12.24	121.3	.10	62.05
34	9.53	206.29	1523.3	.79	4.73	9.53	136.12	1480.3	1.44	5.15
35	4.57	101.82	748.3	.35	9.62	4.80	71.62	728.3	.61	10.37
36	1.78	10.14	704.7	.69	12.22	2.65	30.08	553.1	.50	14.58
37	.47	2.51	549.1	1.10	16.00	.61	3.58	507.4	1.07	17.24
38	1.15	3.23	479.4	6.27	18.18	1.56	8.30	412.3	3.46	20.63
39	1.09	4.70	573.1	11.62	15.20	1.30	6.20	478.9	6.39	18.01

EMISSION RESULTS IN GRAMS PER MILE (PER MINUTE FOR IDLE)
FUEL ECONOMY IN MILES PER GALLON (PER MINUTE FOR IDLE)

APPENDIX H

LISTING OF MODAL RESULTS ON INDIVIDUAL VEHICLES

ST. LOUIS

	VEH	YEAR	MAKE	MODL	CID	VEH	YEAR	MAKE	MODL	CID
	2155	1972	DATS	510	97	2156	1972	TOYO	CELI	120
MODE NO.	HC	CO	CO2	NOXC	FUEL ECONOMY	HC	CO	CO2	NOXC	FUEL ECONOMY
1	6.36	67.61	421.0	3.51	16.21	12.41	160.68	427.4	1.97	12.34
2	1.85	4.73	217.0	2.45	38.54	3.56	78.93	192.0	.68	27.11
3	7.17	145.78	347.6	.16	14.81	17.81	230.78	488.4	0.00	9.78
4	3.18	21.75	329.3	4.64	23.76	3.07	84.67	334.0	1.04	18.61
5	2.29	5.10	304.1	6.66	27.79	2.10	50.51	303.7	4.28	22.77
6	.94	1.39	145.8	4.00	58.79	.96	28.23	101.4	1.90	59.64
7	2.29	44.50	352.9	6.71	20.64	2.91	101.99	322.2	3.21	18.05
8	.76	1.70	166.3	6.81	51.80	.88	15.05	162.3	5.96	47.03
9	1.13	2.21	312.0	10.41	27.82	1.68	28.84	324.2	6.69	23.68
10	2.31	4.24	143.3	4.18	56.44	5.34	29.79	117.3	2.60	49.02
11	3.33	30.50	386.0	9.64	19.97	4.13	101.99	370.2	4.70	16.33
12	3.09	5.36	160.5	4.96	49.67	5.68	31.48	110.9	3.15	49.76
13	3.63	32.58	388.3	9.68	19.68	5.98	99.97	375.2	4.22	16.10
14	1.25	2.30	159.5	5.95	53.12	2.49	38.56	141.0	2.73	42.36
15	1.07	4.09	161.4	1.40	51.83	4.83	102.17	105.5	.05	31.54
16	3.03	86.51	279.5	0.00	20.88	20.90	220.46	228.7	0.00	13.84
17	4.15	32.88	398.0	8.32	19.17	6.54	86.79	378.6	5.42	16.57
18	1.14	2.35	180.9	4.00	47.15	2.27	55.26	123.4	.85	40.82
19	2.55	15.65	351.1	6.82	23.12	4.26	81.93	320.6	2.70	19.17
20	1.87	4.43	170.8	4.22	48.30	4.13	62.87	134.1	1.03	36.08
21	6.08	97.62	372.8	4.68	16.27	7.19	136.94	363.4	3.32	14.76
22	3.04	5.44	163.8	5.74	48.76	6.85	34.76	143.2	3.63	40.43
23	7.35	63.03	463.9	7.17	15.14	12.12	128.84	349.2	1.86	15.04
24	1.80	7.34	325.9	8.18	25.87	2.52	69.25	273.2	3.34	22.76
25	.69	1.43	186.3	7.84	46.54	1.44	42.72	184.1	4.08	34.70
26	1.95	8.37	264.1	2.56	31.32	7.52	153.07	153.0	.40	21.27
27	2.92	19.09	355.6	9.09	22.48	5.02	55.80	315.7	5.88	21.17
28	2.42	6.93	170.9	6.20	46.84	7.68	49.30	149.8	3.07	35.27
29	6.06	54.60	408.6	6.92	17.28	11.59	102.84	267.8	1.57	19.04
30	2.06	9.98	340.9	7.43	24.44	2.96	72.59	274.3	3.64	22.31
31	.77	2.20	181.0	8.31	47.49	1.82	40.09	198.3	4.87	33.24
32	1.85	8.48	191.3	2.15	42.16	8.94	155.09	122.5	.54	22.50
BAG (CALC.)	2.65	16.79	266.9	7.16	29.42	6.26	62.56	237.2	4.29	24.98
BAG (ACT.)	2.75	17.39	263.3	7.58	29.65	6.28	62.89	230.6	4.44	25.40
33	.40	10.77	28.2	0.00	191.16	2.02	15.71	19.3	.02	176.23
34	4.88	122.55	387.6	.28	14.90	10.40	168.84	323.0	.26	14.28
35	2.52	24.05	459.2	.86	17.57	4.92	102.44	378.7	.66	15.98
36	1.71	14.73	290.6	.65	27.81	2.61	59.19	237.3	.34	26.21
37	1.15	2.66	229.7	3.01	37.37	2.04	66.64	179.7	.88	30.52
38	1.11	1.23	212.5	5.86	40.71	1.58	50.67	181.2	1.96	33.39
39	1.16	1.66	253.6	10.68	34.15	1.46	44.19	233.7	4.56	28.84

EMISSION RESULTS IN GRAMS PER MILE (PER MINUTE FOR IDLE)
FUEL ECONOMY IN MILES PER GALLON (PER MINUTE FOR IDLE)

APPENDIX H

LISTING OF MODAL RESULTS ON INDIVIDUAL VEHICLES

ST. LOUIS

	VEH	YEAR	MAKE	MODL	CID	VEH	YEAR	MAKE	MODL	CID
	2157	1972	VOLK	SEDA	97	2158	1972	VOLK	SEDA	97
MODE NO.	HC	CO	CO2	NOXC	FUEL ECONOMY	HC	CO	CO2	NOXC	FUEL ECONOMY
1	9.22	173.63	451.0	1.03	11.78	13.16	157.90	418.2	3.36	12.53
2	1.77	42.49	203.4	.88	32.18	2.39	38.67	155.7	.39	39.62
3	7.91	303.93	550.9	.15	8.42	9.10	238.88	496.2	1.00	9.86
4	2.66	74.73	342.8	.98	18.94	4.22	63.19	316.7	2.30	20.67
5	1.93	29.06	320.8	2.82	23.82	3.50	28.26	265.8	4.19	27.63
6	.62	5.62	148.4	2.13	55.75	.58	12.74	142.4	.88	54.03
7	.98	38.41	300.8	2.76	24.37	1.43	28.81	293.0	6.91	25.89
8	.72	15.00	155.7	3.31	48.88	.62	14.55	157.8	1.93	48.60
9	1.05	15.07	376.0	5.14	22.02	1.24	18.20	313.6	7.55	25.64
10	2.08	22.45	148.2	2.57	46.69	1.62	15.50	128.3	1.38	56.26
11	3.37	55.76	361.6	5.02	19.30	5.31	44.81	347.1	7.11	20.43
12	2.01	23.44	137.0	3.22	49.26	2.35	15.43	149.7	1.83	48.92
13	4.84	59.42	372.8	4.71	18.43	7.05	56.06	363.4	7.04	18.73
14	1.09	19.15	168.7	2.81	43.89	1.21	21.29	160.8	1.99	44.79
15	1.28	43.18	170.9	.17	36.56	1.85	46.07	127.4	.39	43.15
16	5.21	177.30	378.2	.68	13.18	4.93	84.26	303.2	0.00	19.67
17	5.86	67.73	369.0	3.51	17.97	7.73	55.46	356.1	5.52	18.97
18	1.15	10.25	191.1	2.25	42.10	.92	14.46	146.7	1.36	51.51
19	2.61	52.45	351.1	2.52	20.09	4.81	61.72	308.5	4.65	21.10
20	1.69	29.45	192.1	2.15	36.42	1.61	21.40	181.2	1.78	40.36
21	5.87	72.33	334.1	3.51	19.03	8.65	63.46	333.0	5.55	19.29
22	2.47	28.69	183.5	2.95	37.55	2.33	25.55	173.9	1.87	40.07
23	7.05	151.09	300.9	.75	15.83	11.89	147.83	367.1	3.29	13.93
24	1.66	29.04	295.2	3.86	25.64	2.68	28.69	271.3	5.50	27.32
25	.71	9.61	212.7	4.17	38.59	.95	13.68	206.8	3.17	38.37
26	2.29	56.30	226.4	.50	27.55	1.92	55.06	228.7	.57	27.62
27	3.31	49.75	330.1	4.55	21.19	4.77	48.97	328.7	6.23	21.09
28	2.06	22.99	200.1	3.22	36.57	2.22	24.27	198.2	2.56	36.46
29	6.01	126.18	319.3	.68	16.54	8.02	115.38	293.1	1.90	17.76
30	1.91	25.64	294.0	3.49	26.08	2.84	21.06	269.5	5.54	28.48
31	1.00	19.43	234.9	4.19	33.04	1.09	21.72	224.7	4.16	33.83
32	2.76	53.33	234.5	.41	27.14	2.79	52.28	201.5	.71	30.35
BAG (CALC.)	2.65	42.80	260.2	3.30	26.43	3.18	36.72	250.1	3.87	27.92
BAG (ACT.)	2.83	43.36	260.2	3.38	26.31	3.30	38.02	243.1	3.94	28.33
33	1.24	22.13	34.0	.02	122.15	1.00	17.93	31.7	.02	140.68
34	12.37	255.55	498.1	.52	9.45	6.69	155.93	357.4	.26	14.23
35	3.14	110.16	429.7	.53	14.49	2.49	17.48	484.3	.64	17.08
36	2.02	83.35	248.8	.26	22.98	1.59	10.79	276.5	.34	29.73
37	1.04	25.39	214.7	.78	34.42	1.25	24.43	197.6	.69	36.98
38	.66	6.55	211.0	2.49	39.74	.95	13.20	194.8	2.29	40.61
39	.74	7.79	255.7	4.65	32.84	1.11	17.06	236.7	4.62	33.24

EMISSION RESULTS IN GRAMS PER MILE (PER MINUTE FOR IDLE)
FUEL ECONOMY IN MILES PER GALLON (PER MINUTE FOR IDLE)

APPENDIX H

LISTING OF MODAL RESULTS ON INDIVIDUAL VEHICLES

ST. LOUIS

	VEH	YEAR	MAKE	MODL	CID	VEH	YEAR	MAKE	MODL	CID
	1159	1971	BUIC	RIVE	455	1160	1971	BUIC	SKYL	350
MODE NO.	HC	CO	CO2	NOXC	FUEL ECONOMY	HC	CO	CO2	NOXC	FUEL ECONOMY
1	7.56	156.45	1426.4	11.04	5.23	11.77	112.56	1244.5	7.49	6.08
2	2.70	78.64	501.2	1.40	14.01	5.31	39.46	432.9	.50	17.34
3	13.04	376.94	1558.2	3.09	4.05	17.60	88.41	1386.2	4.43	5.61
4	4.04	63.72	1084.9	5.56	7.41	6.22	33.99	902.0	5.27	9.10
5	1.73	12.05	873.1	7.88	9.89	3.82	24.41	750.4	6.23	11.08
6	1.15	10.78	341.5	1.75	24.51	2.01	8.15	326.4	.98	25.68
7	3.71	41.98	1066.7	15.85	7.76	7.49	210.10	865.9	4.91	7.28
8	1.02	7.25	388.9	3.84	22.00	2.00	6.91	344.5	1.02	24.54
9	1.36	9.58	884.4	10.64	9.82	3.49	59.55	715.9	5.97	10.82
10	3.65	30.47	351.3	2.14	21.61	3.97	14.71	298.6	.82	26.55
11	3.50	46.65	1040.2	16.68	7.89	4.45	85.13	1018.7	7.92	7.61
12	6.05	39.80	363.4	2.97	19.94	4.67	17.73	328.7	.86	23.90
13	4.08	62.53	1010.6	14.92	7.91	3.45	42.43	1148.4	8.34	7.24
14	3.78	28.08	371.5	2.54	20.75	3.75	11.25	353.3	1.15	23.18
15	3.11	68.00	479.2	.67	14.89	3.15	30.19	362.7	.48	21.13
16	8.52	327.04	1151.4	.81	5.24	11.23	101.33	699.4	.71	9.92
17	5.24	106.31	994.4	9.98	7.53	4.60	31.38	1100.9	8.35	7.62
18	3.70	47.04	346.7	1.83	20.53	3.10	16.83	377.6	1.01	21.44
19	4.39	95.30	936.5	7.94	8.07	4.06	22.22	843.4	7.50	9.96
20	5.36	72.39	410.8	1.57	16.39	3.56	22.21	421.3	1.12	18.99
21	5.60	102.62	1126.2	15.76	6.80	6.90	161.33	1009.4	7.26	6.91
22	6.56	54.29	380.6	2.60	18.23	4.23	17.44	387.6	1.18	20.71
23	8.79	246.67	1100.4	5.16	5.86	6.87	37.44	1056.3	7.18	7.81
24	3.24	51.43	734.3	7.19	10.75	3.50	39.03	644.6	5.94	12.38
25	2.75	39.54	434.2	3.04	17.57	2.26	7.88	423.0	1.61	20.06
26	5.58	118.98	806.3	1.07	8.78	5.20	40.42	592.0	1.21	13.21
27	4.09	85.75	800.7	9.72	9.36	2.83	18.32	915.2	7.16	9.31
28	5.79	61.76	436.9	2.60	16.07	3.75	18.04	408.5	1.26	19.78
29	7.84	200.49	963.5	2.89	6.81	6.62	40.74	820.9	4.44	9.80
30	3.48	64.65	768.0	7.59	10.08	4.50	72.07	626.6	4.68	11.77
31	2.73	44.62	440.0	2.98	17.11	1.57	8.63	479.3	1.66	17.83
32	5.87	126.47	713.6	.76	9.53	4.61	38.31	526.8	.93	14.75
BAG (CALC.)	3.90	61.19	659.8	6.42	11.55	3.92	36.63	629.6	3.51	12.69
BAG (ACT.)	4.03	62.45	659.8	6.65	11.52	4.23	34.68	622.5	3.63	12.86
33	1.36	45.25	96.0	.07	51.78	2.09	12.34	94.8	.07	73.44
34	15.73	518.01	1182.6	.87	4.34	24.62	137.57	1137.9	.83	6.20
35	7.85	245.51	612.9	.44	8.67	11.61	92.17	732.0	.54	9.71
36	2.09	22.72	806.2	1.17	10.46	7.97	60.46	488.5	.36	14.58
37	.64	3.12	601.0	1.64	14.60	3.48	14.06	433.3	.96	19.03
38	.52	4.66	569.9	2.82	15.33	2.21	3.89	525.1	1.82	16.49
39	1.89	33.51	579.2	4.29	13.91	2.02	5.15	565.3	2.68	15.31

EMISSION RESULTS IN GRAMS PER MILE (PER MINUTE FOR IDLE)
FUEL ECONOMY IN MILES PER GALLON (PER MINUTE FOR IDLE)

APPENDIX H

LISTING OF MODAL RESULTS ON INDIVIDUAL VEHICLES

ST. LOUIS

	VEH	YEAR	MAKE	MODL	CID	VEH	YEAR	MAKE	MODL	CID
	1161	1971	CHEV	VEGA	140	1162	1971	CHEV	CHEL	350
MODE NO.	HC	CO	CO2	NOXC	FUEL ECONOMY	HC	CO	CO2	NOXC	FUEL ECONOMY
1	5.02	108.54	657.2	4.41	10.52	6.50	85.17	1011.9	9.83	7.61
2	1.81	25.84	235.0	2.56	31.55	4.71	70.83	413.9	.89	16.43
3	6.06	127.61	688.1	1.49	9.78	11.27	176.54	953.6	2.73	7.01
4	2.25	31.43	484.2	2.14	16.41	4.57	52.23	662.5	4.92	11.69
5	2.18	21.88	415.9	4.88	19.41	3.02	18.90	643.7	6.25	12.99
6	1.49	9.71	124.2	2.21	61.57	1.77	19.00	259.8	2.53	30.05
7	4.58	104.42	458.0	3.89	13.94	4.70	97.27	788.0	8.16	9.29
8	2.10	23.80	147.8	2.96	46.27	1.14	16.01	319.2	2.37	25.51
9	3.11	31.07	425.3	4.74	18.34	1.85	6.14	649.5	8.31	13.35
10	2.96	28.96	122.7	1.97	49.97	1.25	26.49	318.6	1.56	24.37
11	4.23	97.41	485.7	3.72	13.61	2.83	18.51	820.3	13.09	10.34
12	4.33	33.41	129.6	2.12	45.32	1.67	37.29	353.4	2.08	21.27
13	4.04	88.61	507.1	4.30	13.47	2.84	18.94	810.7	11.61	10.45
14	4.11	30.25	125.5	2.25	47.70	1.10	22.48	331.1	1.84	23.99
15	2.03	13.12	154.2	2.03	48.95	1.99	43.85	397.1	.43	18.79
16	3.22	39.95	340.5	.86	21.46	10.22	256.46	916.3	0.00	6.57
17	3.31	57.86	556.3	5.18	13.49	3.73	36.36	786.5	8.91	10.38
18	2.61	31.72	139.9	1.76	44.82	1.89	26.29	407.3	1.26	19.52
19	2.92	65.56	505.2	2.39	14.37	3.13	34.98	676.8	6.21	11.97
20	3.43	43.28	140.1	2.00	40.53	2.11	53.99	349.0	1.45	20.15
21	5.03	148.87	506.9	3.11	11.73	4.76	98.36	830.1	9.84	8.88
22	4.20	34.45	132.8	2.19	44.32	1.66	32.94	369.9	1.86	20.79
23	4.62	122.41	508.4	2.22	12.41	5.51	82.63	844.8	4.18	8.95
24	2.37	36.76	418.6	4.00	18.34	2.01	14.67	532.1	7.43	15.81
25	3.26	32.13	136.7	3.02	44.93	1.50	22.37	350.3	2.11	22.75
26	2.56	20.33	216.3	2.88	34.62	2.95	57.47	424.4	1.00	16.94
27	3.16	65.51	458.1	3.90	15.54	2.71	24.42	680.7	9.22	12.20
28	3.95	39.51	132.8	2.25	42.78	3.08	38.74	356.4	1.89	20.79
29	3.97	105.30	448.9	1.33	14.16	4.74	77.95	700.6	4.10	10.59
30	3.37	103.16	421.7	2.49	14.93	2.47	16.12	559.6	7.89	14.97
31	3.02	30.61	143.4	3.30	44.13	3.00	18.84	372.2	2.64	21.58
32	2.87	29.79	225.0	2.39	31.60	3.42	70.03	483.9	.53	14.67
BAG (CALC.)	3.39	52.01	296.4	3.09	22.82	2.49	34.30	522.5	5.13	15.19
BAG (ACT.)	3.50	53.43	293.0	3.19	22.87	2.72	35.57	515.6	5.27	15.30
33	.62	15.89	42.5	.04	127.86	1.14	23.51	95.9	.08	65.03
34	6.41	118.25	624.8	1.13	10.68	13.11	275.76	1175.8	.74	5.38
35	2.91	56.77	312.0	.45	21.62	6.33	133.97	632.8	.37	10.28
36	.78	8.46	346.5	.67	24.50	4.49	96.32	399.2	.25	15.72
37	1.25	2.93	192.5	2.40	44.14	1.67	12.43	368.7	.78	22.55
38	1.81	22.68	207.7	3.20	35.64	1.29	8.81	409.7	1.93	20.76
39	2.26	21.65	257.2	4.66	29.75	1.37	11.30	469.3	4.04	18.06

EMISSION RESULTS IN GRAMS PER MILE (PER MINUTE FOR IDLE)
FUEL ECONOMY IN MILES PER GALLON (PER MINUTE FOR IDLE)

APPENDIX H

LISTING OF MODAL RESULTS ON INDIVIDUAL VEHICLES

ST. LOUIS

	VEH	YEAR	MAKE	MODL	CID	VEH	YEAR	MAKE	MODL	CID
	1163	1971	CHEV	NOVA	250	1164	1971	CHEV	IMPA	350
MODE NO.	HC	CO	CO2	NOXC	FUEL ECONOMY	HC	CO	CO2	NOXC	FUEL ECONOMY
1	2.47	25.18	888.5	7.19	9.48	5.16	102.29	1110.6	6.55	6.89
2	.47	2.47	474.2	.82	18.51	2.37	81.62	376.4	.69	17.33
3	3.78	35.48	1017.6	1.66	8.18	8.00	200.97	1222.9	1.83	5.67
4	.49	2.56	705.6	1.90	12.48	3.45	89.78	755.8	2.87	9.78
5	.57	2.78	629.6	5.05	13.96	2.36	39.23	650.4	5.10	12.34
6	.12	2.03	325.7	.65	26.96	1.49	40.64	215.9	.87	31.20
7	1.92	23.79	736.7	10.98	11.38	5.69	280.10	720.5	3.44	7.53
8	.58	2.14	327.7	1.25	26.66	2.04	19.52	267.8	2.15	29.10
9	.50	3.38	570.4	6.74	15.37	2.34	42.02	661.4	6.18	12.08
10	.86	2.59	309.5	.91	28.06	2.73	38.02	231.5	1.26	29.60
11	1.31	10.04	714.6	13.29	12.08	3.52	83.91	797.9	8.12	9.43
12	1.20	3.54	352.3	1.21	24.54	3.77	52.72	222.7	1.73	27.95
13	1.42	11.98	731.2	12.87	11.76	3.35	87.89	807.2	7.68	9.28
14	1.04	2.97	342.4	1.34	25.33	3.10	41.05	253.1	1.44	27.11
15	.37	6.40	402.5	.65	21.45	2.31	102.17	281.1	.44	19.77
16	.58	10.28	909.4	.70	9.57	5.25	197.57	543.0	.65	10.20
17	1.50	14.92	737.8	10.35	11.59	3.78	84.19	795.8	7.25	9.44
18	.21	3.99	380.5	1.09	22.91	2.78	66.12	258.7	1.06	23.90
19	.69	5.97	664.0	5.64	13.14	3.46	105.59	645.4	5.00	10.79
20	.23	5.09	458.4	1.16	19.00	3.10	78.77	323.3	.98	19.42
21	2.58	37.15	759.6	13.34	10.74	6.08	257.26	791.5	5.69	7.30
22	.31	4.84	390.2	1.45	22.26	4.71	60.15	303.2	1.95	21.51
23	2.06	27.02	793.9	5.56	10.53	4.78	136.59	876.6	4.89	8.02
24	.59	4.59	530.7	6.48	16.44	2.50	64.19	575.8	4.71	12.96
25	.19	3.52	402.1	1.94	21.74	3.50	44.34	306.5	2.42	22.92
26	.45	8.05	634.8	1.54	13.68	4.03	118.91	442.7	.72	13.82
27	1.03	10.89	612.0	9.75	14.04	3.08	70.50	681.1	6.67	11.07
28	.24	4.84	418.0	1.53	20.82	5.00	61.48	313.2	1.80	20.85
29	1.79	34.02	626.0	2.93	12.95	4.83	162.58	605.4	2.44	10.13
30	.93	5.49	534.9	7.79	16.24	2.91	89.56	573.2	3.91	12.27
31	.17	4.14	447.9	2.05	19.51	3.06	49.91	342.4	2.67	20.62
32	.30	7.03	669.3	1.42	13.03	3.56	128.07	397.0	.54	14.56
BAG (CALC.)	.71	7.79	522.3	4.95	16.54	3.05	75.45	487.6	3.58	14.41
BAG (ACT.)	.72	6.96	518.7	5.27	16.69	3.20	74.76	487.6	3.73	14.43
33	.36	2.66	67.4	.09	122.04	.71	19.76	80.2	.08	78.18
34	3.15	6.19	881.1	1.08	9.85	7.28	119.90	1146.1	.77	6.54
35	.91	2.87	606.5	.42	14.46	3.57	72.28	687.8	.51	10.92
36	.43	2.82	641.5	.45	13.71	2.71	56.53	435.2	.33	16.66
37	.28	1.88	411.0	.64	21.39	1.38	18.96	361.6	.76	22.43
38	.24	2.31	414.8	.89	21.17	1.10	20.78	347.0	1.27	23.16
39	.16	2.43	466.7	2.23	18.84	1.43	32.73	431.2	3.06	18.22

EMISSION RESULTS IN GRAMS PER MILE (PER MINUTE FOR IDLE)
FUEL ECONOMY IN MILES PER GALLON (PER MINUTE FOR IDLE)

APPENDIX H

LISTING OF MODAL RESULTS ON INDIVIDUAL VEHICLES

ST. LOUIS

	VEH	YEAR	MAKE	MODL	CID	VEH	YEAR	MAKE	MODL	CID
	1165	1971	CHEV	IMPA	350	1166	1971	CHRY	NEWP	383
MODE NO.	HC	CO	CO2	NOXC	FUEL ECONOMY	HC	CO	CO2	NOXC	FUEL ECONOMY
1	3.57	25.41	1493.4	13.78	5.75	7.76	143.10	1094.1	12.35	6.61
2	1.56	4.83	521.0	1.73	16.64	3.47	116.35	429.3	.22	14.24
3	4.54	32.29	1541.6	5.53	5.52	9.10	282.06	1331.2	2.04	4.92
4	1.85	14.70	1094.6	7.10	7.90	4.42	88.35	684.1	7.05	10.60
5	2.17	7.22	782.9	11.09	11.08	3.55	52.83	654.2	7.72	11.86
6	.88	4.69	288.4	1.91	29.72	2.06	20.07	352.2	2.56	22.74
7	5.31	241.01	921.7	5.19	6.74	6.31	206.95	764.0	6.35	8.00
8	2.86	6.74	226.5	2.99	36.06	3.84	23.92	361.7	4.71	21.57
9	2.54	57.83	789.9	10.10	9.99	3.25	30.33	635.3	10.95	12.80
10	2.68	6.58	246.1	1.76	33.50	3.75	39.78	264.2	2.35	26.21
11	3.91	105.23	997.9	10.57	7.55	6.15	216.88	821.6	6.44	7.51
12	1.13	3.39	277.1	2.14	31.03	4.81	48.58	349.2	3.72	20.13
13	3.10	50.97	1073.3	11.[illegible]5	7.63	5.50	164.14	716.2	8.13	8.95
14	2.40	5.97	297.6	2.96	28.22	3.38	31.79	336.8	4.15	22.33
15	1.42	3.95	414.5	1.67	20.87	2.58	75.65	402.2	.43	16.77
16	1.76	0.00	880.9	1.45	10.01	6.57	276.75	598.9	.47	8.42
17	2.82	34.79	1044.3	11.91	8.01	5.34	120.73	793.0	9.67	8.88
18	1.67	4.35	310.2	1.72	27.54	2.51	31.45	358.9	3.38	21.32
19	2.06	16.79	1013.4	10.23	8.48	4.33	76.60	694.8	7.94	10.71
20	2.26	11.17	384.0	2.43	21.72	2.94	51.85	445.8	3.99	16.54
21	5.16	233.03	1026.7	6.61	6.30	7.13	251.87	832.5	4.58	7.10
22	1.69	7.60	374.6	2.66	22.65	4.11	52.39	378.9	3.97	18.71
23	1.86	14.92	1298.6	9.26	6.68	6.83	159.05	866.9	5.64	7.80
24	2.07	17.41	800.2	10.53	10.64	4.00	114.69	601.5	7.64	11.17
25	3.13	6.14	358.1	4.87	23.50	3.96	47.19	593.6	10.90	13.05
26	1.85	2.27	622.1	1.88	14.05	4.37	57.17	895.0	5.78	8.89
27	1.79	9.85	908.7	11.56	9.55	4.03	72.94	735.4	10.61	10.29
28	2.70	4.24	374.6	3.21	22.77	3.67	50.85	399.0	4.40	18.09
29	1.90	13.05	1006.1	6.07	8.60	4.72	117.16	538.5	4.24	12.03
30	2.52	51.84	669.7	8.03	11.69	3.62	93.45	484.4	5.97	13.81
31	2.76	5.71	370.2	5.74	22.88	2.87	29.49	438.3	6.47	17.97
32	2.57	15.12	557.8	2.21	15.05	3.47	121.58	547.4	.83	11.84
BAG (CALC.)	2.32	26.74	618.6	6.47	13.28	3.86	84.96	560.4	6.41	12.57
BAG (ACT.)	2.28	26.55	594.8	6.58	13.79	4.08	85.29	519.7	6.67	13.31
33	.39	.56	106.7	.11	81.56	1.17	36.94	92.8	.06	57.43
34	3.90	8.85	1236.1	1.10	7.03	14.18	434.25	1162.6	.75	4.70
35	1.02	5.08	962.0	.97	9.12	7.75	228.85	580.9	.38	9.20
36	1.02	3.62	601.9	.66	14.53	5.17	152.65	395.1	.25	13.63
37	1.34	1.88	369.6	1.58	23.56	2.80	67.08	307.1	.37	21.06
38	1.30	6.19	396.5	3.88	21.63	1.16	2.92	386.4	5.21	22.49
39	1.19	4.01	450.6	7.20	19.27	2.09	31.61	463.0	7.97	17.09

EMISSION RESULTS IN GRAMS PER MILE (PER MINUTE FOR IDLE)
FUEL ECONOMY IN MILES PER GALLON (PER MINUTE FOR IDLE)

APPENDIX H

LISTING OF MODAL RESULTS ON INDIVIDUAL VEHICLES

ST. LOUIS

	VEH	YEAR	MAKE	MODL	CID	VEH	YEAR	MAKE	MODL	CID
	1167	1971	DODG	CHAR	318	1168	1971	FORD	PINT	122
MODE NO.	HC	CO	CO2	NOXC	FUEL ECONOMY	HC	CO	CO2	NOXC	FUEL ECONOMY
1	16.53	130.81	835.7	6.59	8.12	2.36	19.70	425.9	4.14	19.11
2	9.60	17.40	370.2	2.14	20.74	1.47	14.76	275.5	2.17	29.25
3	26.24	98.83	935.4	3.65	7.56	2.20	21.44	507.8	.58	16.18
4	11.55	26.72	648.5	7.22	12.21	1.69	16.37	323.4	1.90	25.04
5	7.12	28.17	548.8	8.29	14.42	1.54	8.95	277.3	4.69	29.96
6	4.02	8.12	273.2	3.79	29.71	.93	3.23	175.0	4.13	48.49
7	8.12	74.86	683.4	9.90	10.73	2.25	48.64	290.9	4.14	23.70
8	3.26	17.68	284.0	5.60	27.55	1.02	4.16	220.7	6.58	38.51
9	4.97	50.84	545.8	8.31	13.84	1.33	6.26	277.4	7.41	30.45
10	3.86	23.64	260.2	3.27	28.67	.89	9.13	193.2	4.24	42.19
11	7.87	105.41	729.1	7.52	9.65	2.37	46.74	338.6	6.41	21.16
12	4.71	35.92	283.9	3.91	24.98	1.25	11.68	244.4	5.87	33.28
13	8.37	111.84	684.0	7.45	10.01	2.22	38.05	348.2	6.57	21.39
14	3.51	28.17	273.1	3.92	27.02	1.10	7.14	218.0	5.61	38.14
15	7.44	20.88	310.9	1.83	24.16	1.43	23.80	223.2	1.45	33.47
16	22.76	118.97	573.8	1.02	10.66	3.66	72.38	457.7	1.50	15.22
17	10.09	95.63	667.2	7.63	10.45	2.26	22.98	339.0	6.18	23.21
18	4.77	22.28	284.6	3.12	26.51	1.24	5.01	212.6	4.57	39.55
19	10.18	81.08	617.1	6.58	11.43	2.11	35.76	248.1	2.11	28.54
20	6.25	28.03	337.7	3.21	22.10	1.43	6.32	250.9	5.27	33.45
21	10.20	144.54	768.9	7.54	8.63	4.62	100.32	325.0	3.41	17.85
22	4.61	29.46	307.1	3.59	24.12	1.36	8.58	240.7	5.86	34.34
23	14.20	149.21	711.5	4.34	8.96	2.31	24.88	344.1	2.04	22.73
24	6.55	47.11	554.3	7.30	13.67	1.81	19.20	259.5	5.03	30.05
25	3.76	36.36	319.3	3.86	22.85	1.09	4.77	269.6	7.80	31.63
26	12.14	35.21	386.3	2.32	18.48	2.03	30.21	316.2	1.94	23.98
27	7.53	75.48	634.8	7.76	11.42	1.74	22.27	296.2	6.58	26.35
28	4.69	40.62	313.9	2.77	22.61	1.16	9.73	250.8	6.20	32.90
29	14.78	89.24	645.3	5.90	10.66	1.45	18.19	278.7	.80	28.46
30	6.88	52.87	579.5	7.39	12.97	1.68	21.84	237.1	4.37	32.07
31	4.06	41.76	306.5	4.06	23.05	1.29	5.58	292.9	8.93	29.03
32	10.51	46.69	411.6	1.29	17.13	2.13	35.30	259.4	2.13	27.60
BAG (CALC.)	6.56	53.42	464.9	5.73	15.58	1.63	20.13	274.7	5.78	28.49
BAG (ACT.)	6.79	54.91	461.5	5.89	15.59	1.70	20.63	274.7	6.01	28.40
33	2.75	9.41	66.5	.06	98.61	.16	1.61	42.3	.02	195.87
34	31.71	87.20	894.1	.75	7.84	1.75	19.03	647.5	.51	13.00
35	20.85	5.87	720.9	1.03	11.15	2.48	25.19	451.1	1.00	17.80
36	15.06	3.29	503.8	.95	15.94	1.46	16.65	269.8	.60	29.52
37	8.73	4.13	316.7	3.68	25.30	1.33	6.52	231.0	2.17	36.15
38	3.08	4.81	354.6	6.75	23.86	1.18	1.78	215.6	4.89	39.96
39	2.70	17.62	444.0	9.42	18.48	1.07	3.20	256.3	7.23	33.52

EMISSION RESULTS IN GRAMS PER MILE (PER MINUTE FOR IDLE)
FUEL ECONOMY IN MILES PER GALLON (PER MINUTE FOR IDLE)

APPENDIX H

LISTING OF MODAL RESULTS ON INDIVIDUAL VEHICLES

ST. LOUIS

	VEH	YEAR	MAKE	MODL	CID	VEH	YEAR	MAKE	MODL	CID
	1169	1971	FORD	TORI	302	1170	1971	FORD	MAVE	200
MODE NO.	HC	CO	CO2	NOXC	FUEL ECONOMY	HC	CO	CO2	NOXC	FUEL ECONOMY
1	4.58	56.87	872.6	14.23	9.09	3.98	48.88	762.3	20.85	10.42
2	.95	17.16	442.0	.66	18.80	1.96	46.45	273.2	.90	25.19
3	4.71	60.48	1052.9	5.79	7.63	4.06	94.31	679.6	9.48	10.56
4	2.10	5.31	658.3	8.50	13.18	2.45	25.32	468.5	11.10	17.20
5	1.68	3.77	523.6	10.90	16.59	2.18	4.56	441.0	14.61	19.50
6	1.14	6.28	283.1	1.25	29.93	1.37	10.48	185.5	1.46	43.03
7	3.24	33.26	730.1	13.93	11.20	2.88	55.92	601.2	12.54	12.71
8	1.42	8.73	308.3	2.89	27.18	1.45	6.50	190.1	2.86	43.32
9	2.03	4.01	537.2	15.86	16.14	1.95	5.33	459.0	16.54	18.74
10	1.98	8.77	297.4	2.38	27.96	1.41	16.01	185.9	1.92	41.18
11	3.29	15.84	736.1	18.32	11.50	2.55	15.12	581.6	17.93	14.47
12	2.00	17.30	325.1	2.56	24.75	1.82	24.43	161.6	2.12	43.14
13	3.14	13.69	736.0	17.42	11.57	2.34	18.00	579.9	16.41	14.42
14	2.10	10.91	319.3	3.95	25.87	1.55	10.26	204.0	3.29	39.44
15	1.02	2.74	327.9	1.16	26.46	1.81	17.53	226.1	.65	34.22
16	1.53	17.56	888.3	0.00	9.64	2.96	0.00	672.2	0.00	13.02
17	2.97	17.32	712.8	13.37	11.84	2.66	13.13	581.0	18.72	14.55
18	1.34	8.22	347.5	1.48	24.34	2.02	12.09	239.8	1.85	33.47
19	2.17	7.16	615.7	11.00	14.00	2.43	20.98	532.4	16.19	15.49
20	1.51	16.09	390.0	1.63	21.13	1.86	25.22	290.2	2.02	26.44
21	3.73	39.63	756.4	15.65	10.69	3.10	55.19	598.5	14.85	12.77
22	2.42	14.18	381.6	3.70	21.57	2.21	20.21	245.3	2.26	31.24
23	3.00	22.77	730.6	9.71	11.44	2.99	71.39	592.0	14.54	12.44
24	1.89	4.95	529.9	11.58	16.32	1.81	6.36	365.5	12.99	23.28
25	1.48	9.17	364.7	4.80	23.12	1.62	7.04	250.5	4.56	33.28
26	1.59	2.53	489.3	1.37	17.81	2.61	52.69	341.9	1.09	20.50
27	2.53	9.55	632.7	14.43	13.54	2.43	16.26	485.2	14.76	17.12
28	2.21	12.63	384.9	3.99	21.56	2.26	18.14	295.6	3.97	26.79
29	2.57	23.37	690.9	6.39	12.06	3.12	43.54	468.8	10.85	16.22
30	1.82	5.27	541.9	11.13	15.97	2.13	14.73	357.5	11.75	22.91
31	1.57	11.03	406.0	5.88	20.72	1.58	9.96	266.0	5.24	30.96
32	1.25	6.10	456.4	1.11	18.89	2.02	41.66	340.2	1.63	21.54
BAG (CALC.)	2.13	12.82	511.9	8.09	16.47	2.01	18.90	370.9	8.38	21.81
BAG (ACT.)	2.28	14.11	508.5	8.20	16.50	2.00	17.73	370.9	8.66	21.91
33	.44	8.62	102.0	.13	75.89	.43	11.92	76.2	.10	92.19
34	4.09	54.45	1249.1	1.41	6.59	5.07	123.16	937.6	1.15	7.74
35	1.08	5.01	847.1	1.17	10.34	2.24	40.18	546.3	.57	14.40
36	.81	2.68	557.3	.79	15.73	1.71	40.15	311.6	.39	23.35
37	.78	2.34	384.1	.98	22.74	1.25	2.82	235.2	1.54	36.43
38	1.03	3.74	377.3	3.30	22.97	1.47	2.30	265.9	5.00	32.38
39	1.58	8.05	430.3	8.23	19.81	1.22	2.01	297.8	8.81	29.12

EMISSION RESULTS IN GRAMS PER MILE (PER MINUTE FOR IDLE)
FUEL ECONOMY IN MILES PER GALLON (PER MINUTE FOR IDLE)

APPENDIX H

LISTING OF MODAL RESULTS ON INDIVIDUAL VEHICLES

ST. LOUIS

	VEH	YEAR	MAKE	MODL	CID	VEH	YEAR	MAKE	MODL	CID
	1171	1971	FORD	GALA	351	1172	1971	FORD	STAW	400
MODE NO.	HC	CO	CO2	NOXC	FUEL ECONOMY	HC	CO	CO2	NOXC	FUEL ECONOMY
1	5.07	96.61	1018.1	7.77	7.48	4.23	36.39	1245.6	21.45	6.74
2	1.42	37.33	383.3	1.20	19.88	1.51	12.85	393.2	.96	21.23
3	5.82	159.54	1016.7	.84	6.90	5.10	46.14	1111.0	7.33	7.40
4	2.59	22.27	675.3	6.30	12.35	3.24	25.92	763.3	10.73	10.90
5	1.93	10.59	571.4	8.75	14.94	1.74	8.56	680.4	11.20	12.69
6	1.32	9.37	250.5	6.35	32.95	2.42	6.15	251.9	.87	32.97
7	2.63	23.38	773.3	16.59	10.85	3.28	22.35	897.5	19.96	9.41
8	1.98	13.64	317.9	8.68	25.68	2.23	5.35	305.9	2.17	27.62
9	2.11	16.00	542.0	12.25	15.47	1.26	7.51	735.7	14.23	11.81
10	2.41	24.73	260.9	5.11	28.87	2.70	8.33	294.8	1.31	28.05
11	2.79	33.10	751.2	19.84	10.93	1.69	13.01	887.5	18.97	9.72
12	3.39	30.28	265.2	6.85	27.43	3.80	9.80	290.3	1.49	27.93
13	2.88	35.85	727.9	16.49	11.19	2.20	20.22	1015.4	18.02	8.42
14	1.92	15.73	303.8	7.53	26.52	2.93	6.21	338.5	2.12	24.82
15	.95	11.37	382.4	1.84	22.01	.91	4.57	343.1	1.17	25.13
16	3.18	206.81	619.9	.81	9.29	3.73	29.85	782.3	.64	10.55
17	3.02	50.44	681.6	11.44	11.52	2.62	16.46	906.6	17.08	9.43
18	2.27	21.76	300.7	6.48	25.95	2.74	8.26	324.5	1.65	25.64
19	2.68	43.81	601.6	7.58	13.07	2.13	14.52	720.7	12.88	11.83
20	2.17	29.22	344.9	7.25	22.32	2.97	9.79	373.7	1.74	22.27
21	3.06	40.15	806.6	17.72	10.09	3.04	25.91	978.3	20.30	8.63
22	2.55	25.96	321.1	7.36	23.99	3.59	8.89	344.8	2.28	23.98
23	4.65	108.32	703.8	4.32	9.99	3.42	30.36	1061.3	14.97	7.93
24	1.85	18.20	521.6	9.66	15.96	1.15	6.60	601.3	11.25	14.42
25	2.15	15.68	346.5	9.99	23.48	1.90	5.16	448.9	3.06	19.17
26	1.24	16.30	561.0	2.51	15.03	1.01	5.84	526.3	1.62	16.48
27	2.56	40.53	611.0	12.43	13.00	1.61	11.63	754.4	13.43	11.41
28	2.37	25.62	354.2	7.54	22.08	2.89	8.50	420.2	2.86	20.05
29	3.89	102.50	563.3	2.34	12.05	2.98	24.18	809.9	10.45	10.35
30	1.79	14.31	540.9	7.59	15.60	1.22	6.76	564.7	11.56	15.32
31	2.08	16.27	384.7	11.92	21.29	1.41	5.21	469.8	3.55	18.39
32	1.26	20.53	553.9	1.99	15.04	1.20	8.81	506.1	1.80	16.95
BAG (CALC.)	2.27	29.49	486.2	10.19	16.44	1.99	10.60	582.2	7.59	14.67
BAG (ACT.)	2.42	31.72	489.5	10.30	16.22	2.15	10.36	578.7	7.74	14.75
33	.64	21.87	86.1	.07	72.46	.67	4.07	124.8	.14	66.56
34	7.36	227.00	1055.9	.79	6.18	7.70	36.66	1500.2	1.45	5.61
35	1.56	17.43	874.4	1.02	9.79	3.52	10.65	887.5	.86	9.70
36	1.21	11.62	575.8	.75	14.85	2.51	6.32	575.6	.64	14.95
37	.79	2.52	363.0	1.32	24.02	1.44	3.06	437.6	1.10	19.86
38	1.58	4.10	361.7	8.53	23.79	1.50	4.05	467.9	2.58	18.53
39	1.79	19.69	433.8	10.95	18.87	1.22	4.41	554.2	4.78	15.71

EMISSION RESULTS IN GRAMS PER MILE (PER MINUTE FOR IDLE)
FUEL ECONOMY IN MILES PER GALLON (PER MINUTE FOR IDLE)

APPENDIX H

LISTING OF MODAL RESULTS ON INDIVIDUAL VEHICLES

ST. LOUIS

	VEH	YEAR	MAKE	MODL	CID	VEH	YEAR	MAKE	MODL	CID
	1173	1971	MERC	COUG	351	1174	1971	OLDS	CUTL	350
MODE NO.	HC	CO	CO2	NOXC	FUEL ECONOMY	HC	CO	CO2	NOXC	FUEL ECONOMY
1	6.00	104.85	673.5	12.61	10.35	3.48	62.03	1092.4	8.68	7.39
2	3.50	40.03	429.4	.65	17.63	1.24	26.57	365.2	1.22	21.60
3	7.55	219.46	503.5	1.87	10.18	4.30	109.88	1159.5	.90	6.60
4	2.91	40.16	448.2	5.51	17.05	1.89	34.53	674.3	2.93	12.08
5	2.27	10.50	500.7	9.52	16.93	1.92	3.87	565.6	10.76	15.36
6	2.27	6.95	316.5	2.71	26.52	1.12	7.49	257.8	4.30	32.49
7	2.69	9.92	632.3	13.85	13.52	4.47	137.71	652.7	8.91	10.05
8	2.63	6.53	450.1	5.62	18.94	2.02	6.11	297.8	7.82	28.28
9	2.26	6.87	553.5	13.07	15.53	2.06	5.62	624.3	14.37	13.87
10	5.24	18.02	326.2	3.63	23.91	2.57	13.81	242.8	4.95	32.55
11	2.78	21.79	646.2	16.12	12.88	2.32	13.74	817.7	18.35	10.48
12	6.71	16.82	372.9	3.65	21.10	3.48	20.41	300.1	6.55	25.86
13	3.08	28.28	792.4	15.24	10.48	2.17	18.84	789.3	16.02	10.75
14	4.61	10.72	218.2	4.81	35.55	2.70	9.42	300.7	7.15	27.39
15	2.90	8.58	215.9	.99	37.20	1.14	11.20	360.2	1.17	23.27
16	5.79	228.34	511.9	.78	9.98	4.02	174.10	652.5	0.00	9.45
17	3.61	42.97	781.5	14.01	10.31	2.26	31.00	799.0	11.31	10.38
18	4.73	10.87	185.1	3.09	40.87	1.70	12.25	302.4	4.83	27.14
19	3.35	39.16	747.2	10.90	10.83	1.87	28.38	656.6	6.23	12.55
20	5.82	23.75	248.4	3.38	29.18	2.10	20.79	342.3	5.19	23.26
21	3.12	30.41	930.3	15.02	8.98	3.62	79.01	823.2	13.04	9.26
22	5.71	22.30	224.9	5.29	31.92	3.25	19.35	336.3	7.30	23.54
23	5.02	102.98	809.6	5.20	8.99	3.28	62.01	822.3	5.50	9.54
24	1.91	9.24	649.3	10.60	13.25	1.85	6.79	532.0	11.91	16.18
25	2.87	10.85	235.7	6.28	33.90	2.08	8.09	355.6	10.38	23.68
26	2.51	13.33	341.2	1.36	23.98	2.01	23.78	465.6	2.54	17.43
27	2.46	21.36	702.8	14.22	11.93	1.90	18.62	673.7	13.37	12.52
28	4.92	22.72	271.8	5.18	27.47	2.76	19.03	366.2	7.58	21.92
29	4.00	83.94	756.7	6.01	9.85	2.87	67.01	661.9	3.05	11.43
30	2.12	8.77	718.9	11.17	12.00	2.07	10.34	549.0	10.97	15.52
31	3.37	11.38	190.1	6.78	40.58	1.62	7.51	403.8	12.00	21.10
32	3.62	35.13	318.9	1.18	23.02	1.50	21.14	447.0	1.65	18.30
BAG (CALC.)	3.34	24.79	489.3	8.62	16.47	2.29	24.68	502.4	10.26	16.18
BAG (ACT.)	3.61	24.96	482.5	8.66	16.65	2.47	23.14	499.0	10.42	16.34
33	.92	27.65	64.7	.04	79.89	.64	18.62	79.4	.06	80.19
34	10.63	304.26	799.7	.49	6.77	7.28	207.26	976.6	.79	6.70
35	5.41	149.72	421.7	.24	13.17	3.28	58.29	690.0	.52	11.21
36	3.35	88.02	349.7	.24	17.80	2.23	39.17	437.2	.35	17.54
37	.98	2.51	390.9	1.03	22.31	1.00	1.82	331.4	1.22	26.30
38	1.80	4.12	407.2	5.75	21.16	1.40	2.23	351.4	6.22	24.70
39	2.09	7.68	481.4	9.85	17.75	1.38	2.67	422.7	12.17	20.58

EMISSION RESULTS IN GRAMS PER MILE (PER MINUTE FOR IDLE)
FUEL ECONOMY IN MILES PER GALLON (PER MINUTE FOR IDLE)

APPENDIX H

LISTING OF MODAL RESULTS ON INDIVIDUAL VEHICLES

ST. LOUIS

	VEH	YEAR	MAKE	MODL	CID	VEH	YEAR	MAKE	MODL	CID
	1175	1971	PLYM	DUST	225	1176	1971	PONT	CATA	350
MODE NO.	HC	CO	CO2	NOXC	FUEL ECONOMY	HC	CO	CO2	NOXC	FUEL ECONOMY
1	4.81	126.40	891.2	6.95	8.03	6.72	111.61	1287.2	13.59	5.98
2	.89	13.40	314.8	1.71	26.20	2.75	43.40	396.8	1.30	18.74
3	4.09	66.83	921.0	4.15	8.54	7.46	159.36	1373.9	5.25	5.39
4	2.54	43.81	598.4	5.72	13.14	3.92	24.57	878.7	11.34	9.55
5	2.27	50.36	460.6	5.74	16.23	2.93	8.59	701.5	12.85	12.25
6	.63	6.31	233.9	2.99	36.10	2.23	14.77	275.6	3.17	29.01
7	4.38	240.80	563.9	3.25	9.28	5.83	160.30	918.7	11.69	7.46
8	1.03	8.99	290.3	5.68	28.85	3.84	12.32	298.8	5.43	26.87
9	2.13	49.72	532.2	8.11	14.38	2.52	7.23	730.4	18.46	11.84
10	1.38	13.19	203.4	3.40	38.85	2.74	19.57	270.8	3.59	28.61
11	4.99	251.34	568.6	2.59	9.06	4.50	80.33	913.2	16.58	8.42
12	2.44	20.42	232.8	3.94	32.55	3.94	26.10	273.1	5.01	27.18
13	4.26	199.61	548.8	3.44	10.13	4.17	49.37	978.0	19.58	8.30
14	1.54	12.65	272.7	4.83	29.84	2.81	16.42	299.1	4.54	26.59
15	.54	3.09	206.9	2.40	41.57	2.23	28.24	344.6	1.29	22.41
16	2.03	38.17	630.3	1.00	12.74	4.11	81.77	761.9	1.57	9.82
17	3.42	104.10	598.9	5.76	11.48	4.31	35.92	1009.0	20.54	8.22
18	1.22	9.93	306.0	3.55	27.27	2.87	22.56	283.9	2.38	27.02
19	2.85	86.32	560.3	5.13	12.59	3.62	21.35	946.5	18.77	8.95
20	1.41	14.25	277.1	3.67	29.20	3.24	30.28	309.2	2.85	24.18
21	5.11	287.24	601.3	2.71	8.30	6.96	221.88	1018.0	12.38	6.39
22	1.83	18.70	269.6	4.74	29.12	3.20	24.73	306.3	4.08	24.98
23	3.66	86.13	638.9	5.42	11.29	4.88	51.30	1165.6	12.27	7.03
24	1.92	46.77	417.3	5.74	17.86	2.64	12.20	777.1	17.64	11.03
25	1.38	14.66	342.9	6.49	23.96	3.16	15.57	272.6	5.86	28.90
26	1.17	5.47	463.9	3.48	18.64	2.87	35.78	513.5	2.12	15.33
27	2.53	84.57	502.0	5.32	13.81	2.89	17.22	857.5	20.32	9.93
28	1.73	21.18	309.9	5.05	25.45	2.86	26.37	309.6	4.60	24.64
29	2.41	48.19	586.0	4.68	13.26	4.26	37.31	990.0	13.39	8.36
30	2.44	104.87	405.0	3.49	15.37	3.30	22.98	894.6	17.78	9.43
31	1.32	19.22	379.3	7.72	21.45	3.83	14.62	266.5	5.67	29.43
32	1.40	13.32	396.7	2.92	21.03	2.64	39.57	334.0	1.57	21.94
BAG (CALC.)	2.25	63.95	396.1	4.88	17.62	3.02	34.07	579.3	10.42	13.82
BAG (ACT.)	2.45	63.99	379.0	5.07	18.21	3.18	32.56	586.1	10.38	13.71
33	.42	9.18	61.2	.06	115.36	1.02	27.19	78.4	.06	71.38
34	4.28	89.24	783.9	.78	9.46	10.00	192.09	1102.4	.76	6.18
35	2.07	34.69	414.9	.50	18.65	5.07	105.15	584.1	.39	11.60
36	1.74	11.12	338.3	.67	24.56	2.76	51.20	656.1	.80	11.91
37	.92	1.70	268.5	1.62	32.39	2.27	14.03	380.5	1.86	21.66
38	1.06	3.48	298.1	4.91	28.92	1.71	5.20	418.7	5.92	20.53
39	1.22	13.78	345.9	7.54	23.90	1.50	5.73	494.6	10.91	17.46

EMISSION RESULTS IN GRAMS PER MILE (PER MINUTE FOR IDLE)
FUEL ECONOMY IN MILES PER GALLON (PER MINUTE FOR IDLE)

APPENDIX H

LISTING OF MODAL RESULTS ON INDIVIDUAL VEHICLES

ST. LOUIS

	VEH	YEAR	MAKE	MODL	CID	VEH	YEAR	MAKE	MODL	CID
	1177	1971	PONT	LEMA	350	1178	1971	DATS	B110	97
MODE NO.	HC	CO	CO2	NOXC	FUEL ECONOMY	HC	CO	CO2	NOXC	FUEL ECONOMY
1	4.77	59.14	1300.5	9.29	6.30	43.05	183.29	309.0	.37	12.10
2	3.27	55.39	435.8	.70	16.65	21.78	88.13	95.9	.16	29.24
3	6.80	138.67	1392.9	2.06	5.44	45.57	221.26	365.2	.15	10.35
4	2.80	44.39	909.8	3.03	8.98	31.41	130.92	163.1	.12	18.94
5	3.18	15.84	689.9	9.47	12.25	26.26	103.91	178.4	.46	20.88
6	1.44	21.54	259.6	2.39	29.78	15.47	52.00	89.8	.25	40.23
7	5.48	121.48	892.2	8.34	8.07	31.78	142.42	139.6	.23	19.12
8	1.38	18.43	315.2	5.20	25.46	21.41	62.82	101.8	.34	33.06
9	2.31	8.52	708.3	13.13	12.17	29.60	123.83	167.1	.43	19.48
10	1.83	19.67	280.9	3.75	27.95	17.61	53.93	70.6	.26	42.02
11	2.87	23.13	924.9	15.10	9.15	44.74	186.18	155.4	.21	15.05
12	2.41	23.11	312.1	5.37	24.93	21.86	63.48	87.7	.35	34.56
13	3.62	17.57	934.5	17.63	9.12	46.59	190.63	159.6	.18	14.62
14	1.62	15.24	300.3	4.65	26.95	21.10	65.71	92.5	.31	33.79
15	2.74	53.54	401.9	.96	17.94	21.82	66.17	103.4	.12	32.09
16	9.15	121.95	1035.3	0.00	7.07	57.09	221.42	249.4	.17	11.40
17	3.50	29.52	985.4	11.33	8.51	47.26	191.28	186.5	.23	13.93
18	2.22	27.65	311.7	2.94	24.51	19.44	74.23	98.3	.21	32.09
19	2.39	32.91	909.6	6.06	9.16	34.99	148.66	168.0	.26	17.31
20	2.48	31.53	344.5	2.97	22.08	21.25	75.24	106.2	.22	30.42
21	4.08	45.17	1071.7	13.99	7.68	37.10	156.21	143.5	.14	17.52
22	2.07	26.59	318.4	4.82	24.20	28.14	88.43	104.5	.24	26.67
23	5.34	55.59	1000.8	6.98	8.03	37.80	132.97	225.4	.23	16.01
24	2.57	12.05	658.6	10.76	12.94	27.90	115.89	146.6	.35	21.27
25	1.79	12.67	341.1	6.19	24.21	23.53	81.70	113.4	.39	28.04
26	3.88	31.68	504.1	1.31	15.68	32.93	98.04	128.5	.25	22.93
27	2.74	17.01	782.6	13.37	10.85	39.97	165.63	150.5	.21	16.51
28	2.19	24.55	388.7	4.61	20.44	25.25	75.83	104.4	.35	29.23
29	6.07	61.01	851.8	6.44	9.18	30.61	98.01	167.2	.15	21.22
30	2.94	16.62	672.3	11.27	12.54	24.10	105.95	130.5	.33	23.76
31	1.81	13.75	384.5	7.02	21.55	29.39	115.24	141.9	.37	21.32
32	4.17	39.92	429.3	1.21	17.57	30.35	97.69	118.4	.16	24.11
BAG (CALC.)	2.73	26.48	570.1	8.26	14.31	32.81	123.39	129.8	.24	20.75
BAG (ACT.)	2.89	27.06	546.4	8.29	14.84	31.77	121.75	126.4	.24	21.21
33	.98	18.64	106.4	.09	63.95	2.57	8.81	15.1	0.00	239.07
34	11.14	196.66	1323.2	1.14	5.32	31.16	84.91	227.9	.26	19.29
35	5.49	98.85	660.1	.46	10.66	38.28	188.86	227.9	.13	13.74
36	3.68	72.01	463.6	.31	15.08	24.75	111.25	144.4	.08	22.32
37	2.36	31.18	288.1	.50	25.75	19.12	88.75	110.7	.18	28.55
38	1.72	15.02	283.3	1.90	28.41	18.56	75.10	109.0	.23	31.04
39	1.57	8.90	357.9	5.88	23.55	21.13	76.75	129.3	.41	28.01

EMISSION RESULTS IN GRAMS PER MILE (PER MINUTE FOR IDLE)
FUEL ECONOMY IN MILES PER GALLON (PER MINUTE FOR IDLE)

APPENDIX H

LISTING OF MODAL RESULTS ON INDIVIDUAL VEHICLES

ST. LOUIS

	VEH	YEAR	MAKE	MODL	CID	VEH	YEAR	MAKE	MODL	CID
	1179	1971	TOYO	CORO	71	1180	1971	VOLK	SEDA	97
MODE NO.	HC	CO	CO2	NOXC	FUEL ECONOMY	HC	CO	CO2	NOXC	FUEL ECONOMY
1	3.97	74.56	545.1	8.50	13.15	7.47	100.98	539.5	2.78	12.30
2	1.26	34.16	210.6	1.01	33.08	1.77	20.45	244.5	1.28	31.44
3	6.00	180.93	439.2	.72	11.95	6.29	130.70	601.5	.28	10.73
4	2.54	56.81	367.9	3.94	19.08	2.44	38.21	382.7	1.69	19.70
5	1.27	11.05	357.2	8.53	23.44	1.85	8.57	348.5	4.40	24.13
6	.75	12.01	154.7	3.76	50.46	.88	11.03	136.9	2.31	56.52
7	1.65	63.72	402.7	7.04	17.47	1.16	13.03	348.3	4.71	23.83
8	.69	6.47	171.3	8.59	48.32	.93	16.11	164.9	4.20	45.94
9	1.10	8.56	380.8	13.19	22.31	1.22	4.91	374.7	6.55	22.98
10	.79	14.74	156.8	5.05	48.64	1.97	16.09	145.8	3.17	50.06
11	1.88	68.68	435.2	8.89	16.16	3.68	52.95	399.0	5.84	17.97
12	1.06	17.54	170.6	7.15	44.04	2.74	17.04	154.0	4.42	46.83
13	1.92	58.91	437.1	9.45	16.57	4.13	51.74	407.1	5.63	17.70
14	.84	11.74	178.6	7.19	44.44	1.04	14.26	188.4	4.29	41.45
15	.81	20.09	176.0	.84	42.24	1.29	6.22	176.0	.81	46.75
16	2.74	93.36	393.2	1.00	16.18	2.38	21.99	334.7	.16	23.56
17	1.99	30.00	424.3	12.69	18.58	4.90	48.94	405.2	4.97	17.84
18	1.09	19.76	180.7	4.57	41.25	.90	8.67	177.1	2.73	45.85
19	1.52	27.76	392.2	9.70	20.14	2.44	28.69	363.0	3.04	21.35
20	1.19	27.28	215.3	4.37	33.88	1.48	16.12	206.2	2.74	37.57
21	2.33	100.51	420.7	6.70	15.14	5.30	66.74	385.3	4.14	17.51
22	1.05	17.28	207.1	7.29	37.36	2.43	23.54	200.6	3.97	36.18
23	2.87	71.11	416.0	8.60	16.53	5.18	52.03	467.3	2.77	15.69
24	1.17	16.25	335.7	10.20	24.32	1.55	14.56	320.9	4.51	25.45
25	.93	7.87	222.6	10.46	37.31	1.08	13.21	210.8	5.53	37.76
26	1.89	35.77	311.6	2.03	23.75	2.56	20.97	262.1	.63	29.27
27	1.56	33.97	387.1	11.64	19.93	3.05	32.23	360.6	5.26	21.08
28	1.12	19.71	240.4	8.48	32.28	2.08	19.81	193.9	4.49	38.32
29	2.50	69.81	306.9	4.04	20.91	4.27	49.63	377.1	1.06	18.94
30	1.49	54.65	340.3	6.27	20.60	1.80	13.14	327.6	4.09	25.07
31	.85	6.43	269.1	14.14	31.48	1.18	15.69	225.8	5.63	34.92
32	1.80	55.58	297.1	2.86	22.75	2.88	11.01	234.8	.92	33.97
BAG (CALC.)	1.33	30.89	294.4	8.63	25.57	2.56	30.18	274.3	4.21	26.91
BAG (ACT.)	1.34	31.47	294.4	8.98	25.50	2.78	32.30	277.7	4.51	26.31
33	.71	15.64	21.0	.02	185.63	.53	11.91	39.9	.02	147.33
34	7.33	168.00	296.5	.26	15.20	4.86	127.31	569.6	.50	11.30
35	2.67	80.03	182.1	.12	28.05	2.54	48.09	511.0	.74	14.93
36	1.59	48.85	167.1	.17	35.66	1.55	26.40	288.9	.50	26.47
37	.91	13.00	189.3	1.24	41.74	.65	2.69	238.9	1.49	36.20
38	1.08	13.93	221.8	5.41	35.92	.88	7.38	217.4	3.28	38.29
39	.80	1.64	282.3	12.58	30.88	1.17	16.37	261.1	5.89	30.55

EMISSION RESULTS IN GRAMS PER MILE (PER MINUTE FOR IDLE)
FUEL ECONOMY IN MILES PER GALLON (PER MINUTE FOR IDLE)

APPENDIX H

LISTING OF MODAL RESULTS ON INDIVIDUAL VEHICLES

ST. LOUIS

	VEH	YEAR	MAKE	MODL	CID	VEH	YEAR	MAKE	MODL	CID
	0181	1970	AMC	JAVE	232	0182	1970	BUIC	LESA	455
MODE NO.	HC	CO	CO2	NOXC	FUEL ECONOMY	HC	CO	CO2	NOXC	FUEL ECONOMY
1	4.38	68.83	575.5	.62	12.72	8.55	28.51	1345.6	12.15	6.26
2	2.72	44.14	287.8	.87	24.27	2.94	13.59	392.1	1.23	20.99
3	7.43	112.12	757.7	.62	9.27	10.01	62.35	1369.2	1.70	5.92
4	2.54	49.14	475.2	.53	15.84	3.48	27.69	889.4	5.04	9.40
5	2.00	22.74	291.1	1.07	26.64	2.20	15.23	739.6	7.72	11.52
6	1.44	11.92	213.1	2.02	37.54	1.37	3.86	304.4	2.48	28.20
7	2.74	21.69	418.8	4.26	19.23	4.23	43.51	853.5	13.76	9.49
8	1.41	7.81	263.9	4.55	31.62	1.52	4.12	329.5	4.76	26.04
9	2.07	9.14	352.1	3.03	23.80	1.68	6.29	743.9	9.98	11.69
10	3.01	12.28	240.2	2.87	32.99	4.43	4.80	263.9	2.84	31.09
11	3.24	28.30	476.0	6.55	16.72	2.31	13.27	902.7	18.56	9.53
12	3.39	13.82	280.2	3.99	28.39	5.58	4.94	278.0	4.30	29.24
13	3.55	30.01	496.3	5.62	16.00	2.71	11.86	953.3	16.77	9.05
14	1.67	12.14	233.9	3.95	34.36	2.56	4.36	325.3	4.00	26.08
15	2.39	23.80	221.9	.24	33.25	2.15	9.19	396.0	1.60	21.27
16	3.83	0.00	440.0	1.00	19.63	5.89	32.64	913.3	1.16	9.03
17	4.05	40.67	484.0	3.14	15.83	2.84	17.01	911.9	12.81	9.37
18	1.88	13.76	229.7	2.53	34.49	2.74	3.81	318.5	2.73	26.64
19	2.65	40.51	422.3	.66	17.95	2.54	17.06	821.4	8.02	10.36
20	3.05	15.34	268.1	3.29	29.40	4.56	5.82	380.5	3.67	21.96
21	4.46	78.66	445.4	3.30	15.22	3.21	17.03	995.7	18.92	8.59
22	3.58	11.02	259.6	4.11	30.79	4.42	5.43	338.6	4.52	24.58
23	4.21	43.13	464.9	.32	16.26	4.07	21.76	991.6	6.71	8.54
24	1.91	18.14	351.7	2.32	22.98	1.62	8.76	640.0	10.20	13.47
25	1.33	7.63	275.5	5.36	30.43	1.68	3.57	380.9	4.83	22.65
26	4.29	60.05	328.8	.63	20.32	3.16	17.44	530.9	1.76	15.62
27	2.55	17.08	432.9	5.37	18.97	2.03	8.31	796.7	14.51	10.87
28	3.27	13.18	246.1	3.92	32.02	3.61	5.13	379.1	3.96	22.27
29	3.53	32.83	534.9	.13	14.85	3.55	17.75	763.4	6.19	11.06
30	1.96	17.87	338.3	1.75	23.82	1.90	10.97	663.7	10.96	12.92
31	1.24	6.33	266.9	6.17	31.60	1.89	4.74	422.9	5.69	20.34
32	3.09	41.49	264.8	.48	26.12	3.15	14.97	482.6	2.65	17.20
BAG (CALC.)	2.97	19.96	351.8	4.80	22.61	2.84	9.63	586.3	8.58	14.54
BAG (ACT.)	3.00	20.91	355.2	4.83	22.32	3.01	10.10	582.8	8.97	14.59
33	.72	8.18	57.2	.04	122.66	2.25	.52	67.2	.04	118.04
34	7.70	90.83	641.5	.67	10.97	6.96	33.20	1472.6	1.47	5.74
35	6.29	85.73	423.5	.33	15.35	4.91	52.16	699.7	1.53	11.13
36	5.30	68.09	457.3	.45	15.27	3.26	23.02	681.4	1.08	12.19
37	2.29	33.51	206.0	.33	33.38	1.82	11.21	478.2	1.90	17.69
38	2.02	12.02	264.6	1.87	30.61	.88	4.12	473.9	4.22	18.37
39	1.43	7.72	321.8	3.85	26.22	.76	4.46	514.8	6.92	16.93

EMISSION RESULTS IN GRAMS PER MILE (PER MINUTE FOR IDLE)
FUEL ECONOMY IN MILES PER GALLON (PER MINUTE FOR IDLE)

APPENDIX H

LISTING OF MODAL RESULTS ON INDIVIDUAL VEHICLES

ST. LOUIS

	VEH	YEAR	MAKE	MODL	CID	VEH	YEAR	MAKE	MODL	CID
	0183	1970	CHEV	NOVA	250	0184	1970	CHEV	CHEL	307
MODE NO.	HC	CO	CO2	NOXC	FUEL ECONOMY	HC	CO	CO2	NOXC	FUEL ECONOMY
1	4.17	36.96	1057.2	8.71	7.86	16.69	144.42	846.7	7.35	7.88
2	1.09	13.61	338.1	.67	24.45	14.29	62.47	198.8	.51	25.93
3	4.75	36.94	1068.2	2.79	7.78	32.08	318.05	846.3	.40	6.13
4	1.52	7.75	687.9	3.65	12.59	6.27	78.71	627.9	2.80	11.50
5	2.02	14.36	516.1	5.29	16.28	4.01	22.93	566.2	4.76	14.43
6	.66	4.33	205.6	1.62	41.37	3.22	16.42	171.0	1.57	42.88
7	3.30	62.28	645.5	7.91	11.77	5.78	41.36	734.4	9.07	10.85
8	.86	4.65	187.7	3.08	44.89	3.05	19.03	179.5	3.60	40.51
9	2.20	23.65	510.1	7.00	16.01	3.66	20.38	529.6	6.84	15.48
10	1.20	7.53	205.0	1.74	40.23	10.00	24.33	158.2	1.93	38.89
11	2.61	31.35	670.2	9.70	12.20	5.65	40.82	696.0	11.20	11.41
12	1.81	9.84	207.5	2.37	38.81	12.72	30.69	178.9	2.63	33.18
13	2.69	25.84	678.9	9.15	12.19	6.83	45.36	694.6	10.30	11.27
14	1.13	5.92	216.0	2.58	38.78	6.32	23.74	202.1	2.73	34.21
15	.70	5.58	298.0	.48	28.73	4.68	42.92	236.6	.42	27.84
16	1.28	18.65	783.1	.72	10.87	12.49	206.85	308.8	.31	13.18
17	2.77	20.66	715.3	8.39	11.73	7.47	53.51	653.8	8.04	11.65
18	.88	7.22	253.4	2.11	33.17	5.53	21.61	211.3	1.71	33.77
19	2.17	16.35	579.6	6.11	14.50	5.09	47.65	548.6	4.31	13.88
20	1.00	12.49	274.7	2.10	29.83	11.72	36.54	217.2	1.92	28.47
21	3.97	97.97	695.5	6.83	10.30	7.33	65.97	746.1	9.72	10.17
22	1.57	9.59	244.6	2.78	33.54	11.31	26.86	225.8	3.06	29.21
23	3.27	27.35	747.8	5.40	11.08	13.43	113.41	658.1	2.69	10.10
24	2.04	18.46	451.1	5.60	18.24	3.55	19.83	502.8	5.83	16.28
25	1.15	5.59	243.5	3.48	34.68	2.46	20.40	272.8	3.79	28.38
26	1.48	9.91	489.3	.97	17.42	7.39	69.47	364.2	.69	17.87
27	2.02	14.31	572.3	7.84	14.76	5.46	36.80	564.5	8.60	13.87
28	1.24	9.18	264.9	2.69	31.34	10.65	30.95	252.7	3.09	26.49
29	2.65	23.26	662.1	3.33	12.55	11.58	112.91	476.8	1.58	12.85
30	2.19	27.23	469.9	5.42	17.08	3.21	23.36	483.7	4.84	16.73
31	1.19	5.09	266.4	4.52	31.90	2.64	23.98	315.6	4.81	24.54
32	1.58	9.66	406.9	1.20	20.78	7.35	65.52	299.5	.67	20.85
BAG (CALC.)	1.64	15.82	416.3	4.58	19.88	7.58	40.54	406.0	5.47	17.97
BAG (ACT.)	1.67	15.17	405.9	4.87	20.40	7.53	42.21	409.4	5.58	17.76
33	.45	5.82	88.3	.14	89.78	3.76	30.38	32.5	.02	96.33
34	5.45	73.28	1062.7	1.37	7.43	52.37	395.84	436.3	.24	7.25
35	2.29	34.36	553.1	.55	14.45	11.39	213.55	411.7	.24	11.33
36	.66	2.20	485.0	.46	18.09	7.29	143.61	267.1	.16	17.21
37	.87	1.78	268.5	.61	32.38	3.08	42.57	266.3	.44	25.88
38	1.20	1.98	263.6	3.27	32.81	2.37	18.62	309.6	2.00	25.63
39	.93	2.61	313.2	5.13	27.71	2.47	18.60	360.3	4.05	22.33

EMISSION RESULTS IN GRAMS PER MILE (PER MINUTE FOR IDLE)
FUEL ECONOMY IN MILES PER GALLON (PER MINUTE FOR IDLE)

APPENDIX H

LISTING OF MODAL RESULTS ON INDIVIDUAL VEHICLES

ST. LOUIS

	VEH	YEAR	MAKE	MODL	CID	VEH	YEAR	MAKE	MODL	CID
	0185	1970	CHEV	CHEL	350	0186	1970	CHEV	IMPA	350
MODE NO.	HC	CO	CO2	NOXC	FUEL ECONOMY	HC	CO	CO2	NOXC	FUEL ECONOMY
1	4.83	89.38	926.1	5.99	8.20	11.13	222.36	729.2	4.90	7.97
2	2.05	62.40	388.7	.81	17.99	3.13	54.20	258.7	1.38	25.09
3	5.62	182.26	1107.3	.90	6.29	17.27	237.66	740.8	.14	7.59
4	2.59	40.08	622.7	3.05	12.79	7.00	127.79	501.8	1.44	12.25
5	1.88	19.20	594.0	4.74	14.08	4.88	67.22	511.9	5.69	14.02
6	1.58	22.76	226.1	1.35	33.26	1.84	36.43	170.1	2.26	38.07
7	3.02	31.84	778.9	10.25	10.58	5.08	37.66	739.9	18.06	10.89
8	2.10	14.18	240.2	2.65	32.98	1.62	18.53	193.8	5.60	38.91
9	2.34	22.12	562.6	6.26	14.68	3.76	40.87	556.7	13.79	14.02
10	2.67	24.86	244.9	1.44	30.35	2.81	23.50	188.1	3.94	37.94
11	3.24	36.25	740.3	11.53	10.99	4.54	28.37	715.2	23.03	11.47
12	4.02	32.37	229.9	2.08	30.24	2.91	15.20	207.9	5.50	36.83
13	3.19	40.67	704.6	9.91	11.40	4.92	39.04	678.2	20.61	11.75
14	2.42	18.19	266.4	2.19	29.33	1.86	21.66	212.9	5.25	35.10
15	1.43	39.83	330.6	.82	22.31	3.93	48.84	249.9	.61	26.17
16	5.71	180.03	711.8	.35	8.76	8.80	145.58	525.1	0.00	11.35
17	3.24	48.72	732.4	8.04	10.83	5.63	71.62	673.6	13.81	11.04
18	1.92	35.31	278.4	1.43	26.11	2.69	65.77	217.5	2.01	26.94
19	3.03	52.28	616.6	5.00	12.53	5.24	70.16	515.8	7.34	13.81
20	2.68	50.41	329.1	1.48	21.29	3.15	65.07	243.5	2.18	24.95
21	3.88	63.45	795.1	10.30	9.78	4.85	43.50	771.1	22.04	10.38
22	3.30	33.58	292.2	2.12	24.97	3.37	28.38	247.8	5.04	29.28
23	4.40	88.35	805.8	4.44	9.26	8.98	161.30	609.6	2.32	9.95
24	2.04	27.27	537.5	4.92	15.12	3.82	42.64	504.9	10.68	15.20
25	2.13	18.67	326.6	3.18	24.47	2.02	22.97	297.6	7.30	26.10
26	2.41	65.32	486.5	1.19	14.87	5.56	97.04	319.7	.80	18.12
27	2.70	39.28	632.5	7.80	12.63	3.87	39.92	570.1	14.75	13.76
28	2.65	34.84	316.5	2.36	23.38	3.75	29.05	284.6	6.10	25.94
29	3.75	83.22	671.5	2.21	10.90	8.21	154.48	391.1	.80	13.45
30	2.29	32.11	573.5	5.32	14.06	3.64	36.99	470.7	9.64	16.42
31	1.96	18.97	323.3	3.48	24.70	2.01	24.04	335.6	8.25	23.38
32	2.53	80.94	431.3	.91	15.67	5.18	61.69	318.4	1.17	20.55
BAG (CALC.)	2.53	37.50	475.5	4.90	16.36	4.06	40.49	417.1	9.89	17.98
BAG (ACT.)	2.73	35.40	472.0	5.22	16.55	4.32	42.70	417.1	10.09	17.82
33	.80	25.75	77.0	.07	73.95	1.15	20.19	51.4	.04	102.26
34	9.30	278.05	971.7	.80	6.17	14.88	225.44	641.4	.51	8.51
35	4.42	122.20	697.4	.54	9.82	7.53	70.16	524.3	.38	13.48
36	3.12	82.20	449.7	.36	15.07	4.52	46.15	334.3	.26	21.07
37	1.45	14.60	397.7	1.09	20.87	3.64	64.25	251.3	.73	24.39
38	.95	6.30	399.9	2.06	21.50	3.22	64.57	284.1	3.00	22.42
39	1.21	10.82	425.4	3.76	19.89	2.49	23.53	380.2	9.86	20.88

EMISSION RESULTS IN GRAMS PER MILE (PER MINUTE FOR IDLE)
FUEL ECONOMY IN MILES PER GALLON (PER MINUTE FOR IDLE)

APPENDIX H

LISTING OF MODAL RESULTS ON INDIVIDUAL VEHICLES

ST. LOUIS

	VEH	YEAR	MAKE	MODL	CID	VEH	YEAR	MAKE	MODL	CID
	0187	1970	CHEV	IMPA	350	0188	1970	DODG	CORO	225
MODE NO.	HC	CO	CO2	NOXC	FUEL ECONOMY	HC	CO	CO2	NOXC	FUEL ECONOMY
1	5.53	118.09	1014.4	7.04	7.29	4.05	150.43	648.5	4.47	9.89
2	1.82	18.03	329.6	.69	24.40	3.31	61.14	175.7	.59	31.44
3	5.32	93.48	1101.2	1.85	7.02	6.31	286.39	623.1	.27	8.12
4	4.09	66.59	694.7	3.17	10.93	2.67	105.00	429.5	2.70	14.72
5	3.16	35.72	656.5	4.54	12.28	1.98	58.19	412.5	4.48	17.40
6	1.12	10.52	228.7	.88	35.67	1.05	18.97	162.8	2.77	45.30
7	4.19	78.14	834.8	9.62	9.14	3.17	145.82	506.5	4.03	11.90
8	2.51	32.58	246.9	1.57	29.00	.97	21.51	212.1	4.97	35.65
9	3.06	38.24	614.4	6.58	12.97	1.49	26.39	467.0	8.48	17.29
10	2.01	21.12	243.7	1.08	31.33	4.49	26.98	161.6	3.33	40.66
11	4.01	54.12	790.9	10.50	9.99	3.37	160.34	503.3	3.80	11.59
12	3.58	30.06	270.9	1.33	26.94	6.27	29.14	139.9	3.69	43.17
13	4.06	64.72	755.6	9.58	10.20	3.47	163.80	477.6	3.51	11.90
14	2.16	26.17	232.1	1.26	31.68	2.10	27.72	213.8	4.28	33.62
15	.58	7.97	276.8	.78	30.48	3.18	58.59	189.7	.90	30.41
16	3.68	95.92	750.3	.17	9.73	5.87	193.92	347.7	.47	13.23
17	4.50	89.70	779.7	6.83	9.49	3.35	129.13	520.4	4.17	12.09
18	1.32	15.83	321.6	1.31	25.31	2.15	30.61	197.7	2.97	35.13
19	3.67	82.21	704.4	4.41	10.50	2.52	66.19	423.6	4.64	16.57
20	1.73	20.09	305.8	1.40	25.89	4.31	36.32	205.1	3.17	32.18
21	4.78	114.98	827.0	8.67	8.68	3.90	197.10	507.1	2.82	10.70
22	2.72	20.08	294.1	1.40	26.55	5.58	32.84	196.2	4.08	33.43
23	4.85	84.52	848.0	4.29	8.91	4.93	114.04	528.4	3.94	12.27
24	2.77	39.40	509.9	5.72	15.29	1.69	44.27	411.5	5.02	18.25
25	2.59	29.96	266.6	1.99	27.57	1.14	29.09	250.2	6.04	29.63
26	2.29	20.58	458.4	1.21	17.82	6.18	105.26	303.1	1.45	18.18
27	3.61	64.33	642.1	6.80	11.76	2.11	50.93	474.2	7.96	15.82
28	2.31	28.15	307.6	1.33	24.71	5.12	35.68	219.4	4.34	30.42
29	4.40	79.45	659.1	3.55	11.12	3.76	114.08	432.2	1.52	14.24
30	3.07	40.06	598.6	6.00	13.22	1.87	60.86	399.2	3.95	17.72
31	2.97	30.12	324.2	1.87	23.30	1.33	29.18	280.1	7.03	26.88
32	1.50	11.34	384.0	.94	21.83	5.10	81.38	240.6	1.49	23.08
BAG (CALC.)	2.77	45.06	479.4	3.92	15.88	3.60	68.81	333.4	4.79	19.59
BAG (ACT.)	2.94	48.12	482.8	3.92	15.63	3.87	68.83	320.0	4.87	20.15
33	.75	15.15	87.9	.06	77.81	.95	25.10	26.5	.02	128.78
34	7.95	118.37	1147.6	.74	6.53	8.22	281.56	432.7	.24	9.85
35	3.07	44.98	698.5	.50	11.39	3.93	151.38	307.4	.24	15.91
36	2.05	24.40	459.2	.43	17.61	2.84	102.27	250.4	.24	21.13
37	.99	3.48	358.5	.87	24.18	2.04	56.38	227.5	1.05	27.52
38	1.09	10.39	379.3	1.88	22.24	1.38	24.78	275.2	4.29	27.86
39	1.88	28.77	424.2	3.53	18.67	1.26	26.64	326.1	7.27	23.86

EMISSION RESULTS IN GRAMS PER MILE (PER MINUTE FOR IDLE)
FUEL ECONOMY IN MILES PER GALLON (PER MINUTE FOR IDLE)

APPENDIX H

LISTING OF MODAL RESULTS ON INDIVIDUAL VEHICLES

ST. LOUIS

	VEH	YEAR	MAKE	MODL	CID	VEH	YEAR	MAKE	MODL	CID
	0189	1970	FORD	MUST	302	0190	1970	FORD	STAW	302
MODE NO.	HC	CO	CO2	NOXC	FUEL ECONOMY	HC	CO	CO2	NOXC	FUEL ECONOMY
1	3.76	51.50	863.9	5.69	9.28	7.90	146.38	773.5	14.86	8.63
2	2.52	24.76	332.4	.32	23.40	2.83	69.91	204.6	.70	27.44
3	5.32	113.68	762.9	1.33	9.26	9.14	232.92	979.6	6.33	6.46
4	1.66	23.23	656.5	2.89	12.71	4.18	65.73	580.6	9.61	12.73
5	1.19	6.02	561.2	4.07	15.45	3.17	23.26	590.6	14.34	13.93
6	4.72	6.05	249.7	.70	32.38	3.55	18.19	217.9	1.41	34.44
7	2.20	8.03	725.5	13.31	11.91	5.15	87.05	770.7	12.38	9.61
8	3.45	4.54	274.5	1.89	30.33	2.81	19.20	266.8	2.27	29.02
9	1.50	5.34	520.7	8.36	16.63	3.59	30.33	624.3	16.10	12.99
10	4.26	10.55	243.5	1.16	32.44	5.48	27.59	216.4	1.62	32.03
11	2.25	18.44	661.2	11.25	12.73	5.05	85.26	760.8	14.37	9.75
12	6.28	14.64	227.4	1.26	32.83	7.58	32.41	214.9	1.93	30.62
13	2.26	16.25	676.3	10.74	12.52	5.29	82.23	761.4	13.52	9.78
14	4.09	6.97	279.8	1.59	29.22	4.43	24.42	256.8	2.91	28.70
15	1.76	10.74	361.2	.52	23.13	2.30	26.23	303.9	.91	25.18
16	4.08	102.53	566.9	.34	11.98	4.92	164.13	452.7	.46	12.22
17	1.90	21.37	722.6	6.72	11.64	4.91	49.51	745.2	17.14	10.58
18	3.09	10.78	285.2	.85	28.45	4.66	23.69	228.4	2.24	31.65
19	1.82	23.22	588.2	6.72	14.08	4.18	58.01	601.7	11.37	12.57
20	4.68	17.90	292.9	1.03	26.42	5.98	31.61	243.6	2.41	28.42
21	4.90	123.86	669.0	7.26	10.10	5.68	113.81	772.4	12.85	9.16
22	4.32	14.28	323.9	1.81	24.65	6.31	32.79	268.2	3.07	26.12
23	4.43	14.83	683.9	2.79	12.31	5.26	89.63	693.2	10.82	10.43
24	1.81	11.72	508.5	6.74	16.66	3.24	31.66	555.7	11.45	14.41
25	3.80	9.44	361.4	1.98	22.86	2.51	25.13	312.4	4.79	24.67
26	2.44	66.35	544.9	.67	13.51	4.19	56.33	468.8	1.24	15.55
27	2.00	10.16	589.3	8.40	14.51	3.94	43.77	621.6	13.88	12.63
28	4.07	25.37	347.2	1.54	22.19	5.68	33.00	311.7	3.69	23.26
29	3.08	13.63	567.8	3.31	14.82	4.43	84.35	576.7	6.52	12.27
30	1.81	9.82	540.4	8.66	15.80	3.32	41.33	519.7	8.40	14.91
31	3.98	7.72	373.4	2.03	22.29	2.50	23.28	370.0	4.93	21.41
32	2.50	54.59	538.1	.90	14.05	3.01	42.94	387.8	1.50	19.09
BAG (CALC.)	2.51	17.88	466.6	4.39	17.66	4.35	45.71	465.1	7.50	16.11
BAG (ACT.)	2.68	17.58	456.5	4.67	18.02	4.57	48.05	461.8	7.50	16.09
33	.72	13.98	66.4	.04	97.86	.88	26.52	45.6	.04	98.55
34	6.61	128.28	822.2	.52	8.50	7.50	255.07	546.6	.23	9.14
35	3.30	71.15	433.9	.27	15.96	4.21	134.22	375.3	.23	14.80
36	1.61	33.80	441.3	.35	17.77	3.53	87.82	401.6	.30	16.11
37	.46	2.24	398.1	.66	22.02	2.45	42.87	337.2	.84	21.53
38	.67	2.27	355.4	1.68	24.58	2.23	15.18	376.1	5.20	21.80
39	.86	4.08	408.9	4.07	21.23	2.41	21.29	430.9	7.88	18.81

EMISSION RESULTS IN GRAMS PER MILE (PER MINUTE FOR IDLE)
FUEL ECONOMY IN MILES PER GALLON (PER MINUTE FOR IDLE)

APPENDIX H

LISTING OF MODAL RESULTS ON INDIVIDUAL VEHICLES

ST. LOUIS

	VEH	YEAR	MAKE	MODL	CID	VEH	YEAR	MAKE	MODL	CID
	0191	1970	FORD	LTD	351	0192	1970	FORD	LTD	351
MODE NO.	HC	CO	CO2	NOXC	FUEL ECONOMY	HC	CO	CO2	NOXC	FUEL ECONOMY
1	13.13	34.07	1029.0	9.69	7.90	4.18	20.12	922.3	13.32	9.18
2	6.96	8.81	351.0	1.24	22.94	1.30	14.25	283.7	.64	28.61
3	21.41	83.44	976.9	.81	7.55	3.87	33.30	888.5	5.02	9.31
4	9.91	25.15	641.4	4.58	12.46	2.21	2.09	655.3	8.85	13.33
5	5.72	11.72	551.3	5.20	15.10	1.92	2.55	592.7	10.60	14.72
6	2.98	4.34	217.1	4.22	38.03	3.14	6.44	170.9	3.02	46.47
7	5.49	23.94	716.2	12.08	11.51	2.77	12.99	732.3	14.50	11.65
8	2.52	8.19	303.0	6.61	27.40	2.87	2.85	199.7	5.90	41.62
9	3.02	10.47	480.3	10.32	17.53	1.49	6.64	577.8	10.37	14.97
10	3.45	10.62	252.7	3.79	31.66	3.35	5.64	193.1	3.11	41.75
11	5.46	20.62	739.6	15.65	11.24	1.75	8.60	712.6	14.21	12.13
12	4.60	14.45	325.6	5.82	24.46	4.48	9.06	199.3	4.11	38.98
13	5.42	15.50	772.4	14.22	10.90	2.25	16.55	713.1	14.08	11.89
14	3.08	8.16	261.9	5.84	31.19	2.95	5.38	209.3	4.36	39.08
15	5.16	10.30	356.6	1.63	22.80	.62	8.88	392.8	.98	21.71
16	13.94	0.00	545.3	.78	15.06	1.30	19.11	683.3	.98	12.37
17	7.74	22.01	781.1	10.85	10.56	3.03	17.11	710.0	15.34	11.89
18	3.34	5.99	289.3	4.50	28.69	3.22	9.47	234.0	3.57	34.25
19	7.43	18.42	589.3	6.60	13.83	2.09	11.33	661.0	11.04	12.95
20	4.10	9.51	315.7	4.67	25.82	3.81	12.79	268.0	3.80	29.57
21	6.47	30.60	849.4	15.05	9.67	2.80	20.07	741.8	15.08	11.35
22	4.45	11.85	315.0	5.85	25.52	3.90	8.50	251.3	4.20	32.04
23	13.01	34.82	732.9	6.60	10.71	3.30	26.15	641.4	9.32	12.81
24	4.16	7.43	554.0	8.27	15.33	1.45	4.96	531.3	10.05	16.33
25	2.74	6.41	339.9	7.36	24.75	3.05	6.61	247.6	5.89	33.15
26	8.71	12.33	667.4	2.36	12.42	1.26	11.37	465.8	1.61	18.20
27	5.38	11.66	670.4	11.87	12.57	1.75	9.33	609.6	11.83	14.09
28	3.75	9.73	335.3	6.10	24.49	3.48	8.52	272.2	4.91	29.92
29	10.85	37.26	673.4	3.22	11.58	3.21	22.69	666.8	6.92	12.45
30	4.10	7.25	496.8	8.65	17.03	1.51	4.61	591.1	10.39	14.71
31	2.41	5.82	342.0	9.15	24.74	2.74	3.55	200.3	7.07	41.38
32	7.22	19.03	440.9	2.00	17.98	1.34	11.44	382.1	1.48	21.95
BAG (CALC.)	4.85	12.55	487.2	8.51	16.99	2.20	8.90	438.1	8.05	19.33
BAG (ACT.)	5.09	12.40	483.7	8.73	17.09	2.28	8.94	438.1	8.37	19.32
33	2.76	16.89	82.3	.08	75.49	.41	4.43	69.1	.07	114.66
34	24.49	102.80	1126.2	1.22	6.50	3.87	40.07	852.5	.85	9.57
35	17.58	18.16	801.9	1.22	10.01	.62	3.92	910.9	1.34	9.66
36	12.69	13.01	541.7	.95	14.73	.46	2.51	598.3	.84	14.70
37	5.11	3.85	324.3	1.64	25.61	.87	2.12	350.1	1.10	24.92
38	2.99	4.03	353.3	5.57	24.04	1.32	2.84	343.1	5.43	25.23
39	2.30	7.99	405.9	9.42	20.85	1.23	3.70	375.5	9.31	23.04

EMISSION RESULTS IN GRAMS PER MILE (PER MINUTE FOR IDLE)
FUEL ECONOMY IN MILES PER GALLON (PER MINUTE FOR IDLE)

APPENDIX H

LISTING OF MODAL RESULTS ON INDIVIDUAL VEHICLES

ST. LOUIS

	VEH	YEAR	MAKE	MODL	CID	VEH	YEAR	MAKE	MODL	CID
	0193	1970	MERC	MARQ	390	0194	1970	OLDS	STAW	350
MODE NO.	HC	CO	CO2	NOXC	FUEL ECONOMY	HC	CO	CO2	NOXC	FUEL ECONOMY
1	7.45	61.00	1290.3	16.05	6.30	5.76	133.03	1064.1	2.55	6.87
2	1.60	22.78	531.8	.97	15.50	3.53	90.07	313.6	.45	19.03
3	6.67	88.90	1533.3	6.41	5.24	8.36	320.85	998.3	.28	5.80
4	4.43	19.90	871.9	8.53	9.68	2.67	71.42	765.9	1.57	10.01
5	4.17	20.47	724.3	9.63	11.53	2.54	28.66	645.3	3.90	12.71
6	1.66	11.66	370.5	3.44	22.52	1.69	25.22	293.1	2.23	26.25
7	4.99	75.08	935.7	13.37	8.30	8.07	227.00	700.2	2.64	8.20
8	3.77	17.47	353.3	7.10	22.60	1.87	19.54	359.3	3.85	22.42
9	3.95	19.13	705.3	13.81	11.87	3.35	37.82	654.5	5.41	12.25
10	2.73	18.53	329.2	4.14	24.19	1.71	33.73	287.7	2.59	25.64
11	5.16	52.90	958.1	15.87	8.39	4.47	61.70	928.4	8.06	8.54
12	3.65	22.75	383.2	4.19	20.62	2.63	34.77	298.2	3.06	24.58
13	4.84	27.45	957.6	16.97	8.74	4.10	96.76	840.1	5.82	8.83
14	3.27	20.10	380.8	5.50	20.99	3.10	21.48	301.1	3.22	25.75
15	1.00	8.76	672.3	1.69	12.88	1.79	45.05	322.8	.91	22.23
16	2.65	45.18	1197.3	1.91	6.95	5.70	147.99	793.0	.80	8.50
17	5.56	38.91	951.7	14.48	8.61	4.70	65.43	865.1	5.67	9.03
18	1.74	14.78	402.9	3.70	20.56	2.65	33.55	303.0	2.55	24.37
19	4.15	23.15	803.4	11.56	10.41	3.33	44.18	725.5	3.51	11.02
20	2.04	20.02	483.1	4.37	17.04	2.89	41.47	350.6	2.87	20.89
21	5.30	87.83	1056.0	14.33	7.33	7.30	275.85	836.1	3.62	6.87
22	3.69	20.49	439.7	5.50	18.35	4.54	34.44	332.8	3.42	22.12
23	5.46	35.28	944.7	12.05	8.72	5.40	113.65	851.8	2.18	8.47
24	3.36	17.47	664.9	9.95	12.62	2.96	53.83	604.4	4.22	12.71
25	3.13	19.63	464.4	8.11	17.57	2.04	18.23	374.0	4.88	21.70
26	1.81	6.22	732.4	2.78	11.87	4.02	68.09	519.6	1.17	13.88
27	4.42	28.94	784.1	14.03	10.52	3.24	58.58	764.9	5.87	10.23
28	3.22	23.38	476.6	6.25	16.95	4.15	33.82	357.2	3.64	20.96
29	4.68	35.33	808.3	7.99	10.10	4.44	108.11	656.3	1.90	10.56
30	3.60	16.56	627.6	10.96	13.35	3.51	70.72	583.0	3.83	12.58
31	3.72	27.15	553.5	9.78	14.60	1.96	18.92	432.3	5.59	18.95
32	1.98	15.00	686.4	3.21	12.39	3.91	69.50	434.4	.91	15.96
BAG (CALC.)	3.52	28.96	642.6	9.12	12.69	3.42	64.03	542.8	4.25	13.57
BAG (ACT.)	3.49	30.34	625.6	9.36	12.97	3.63	64.77	532.2	4.36	13.75
33	.61	13.82	125.6	.13	59.45	1.16	33.42	59.8	.04	76.48
34	6.19	143.71	1574.4	1.29	4.88	11.29	376.56	788.4	.48	6.27
35	2.81	55.11	853.7	.93	9.35	5.01	144.17	771.5	.61	8.75
36	1.09	13.49	713.8	1.14	12.02	3.49	99.50	514.6	.40	13.01
37	1.03	2.65	451.6	1.26	19.33	2.66	40.51	348.0	.68	21.13
38	2.08	11.20	422.8	5.86	19.86	2.39	26.26	379.5	2.94	20.72
39	2.84	23.37	503.5	9.52	16.16	1.90	15.06	459.7	5.42	18.14

EMISSION RESULTS IN GRAMS PER MILE (PER MINUTE FOR IDLE)
FUEL ECONOMY IN MILES PER GALLON (PER MINUTE FOR IDLE)

APPENDIX H

LISTING OF MODAL RESULTS ON INDIVIDUAL VEHICLES

ST. LOUIS

	VEH	YEAR	MAKE	MODL	CID	VEH	YEAR	MAKE	MODL	CID
	0195	1970	PLYM	STAW	383	0196	1970	PLYM	DUST	318
MODE NO.	HC	CO	CO2	NOXC	FUEL ECONOMY	HC	CO	CO2	NOXC	FUEL ECONOMY
1	5.92	77.06	1155.4	16.95	6.85	7.66	240.04	700.4	6.79	8.05
2	2.36	15.69	474.7	1.95	17.51	5.30	156.27	258.5	.35	17.04
3	7.39	131.24	1273.4	1.55	5.90	10.48	445.09	714.4	.16	6.13
4	4.28	65.90	790.1	9.45	9.78	4.44	113.70	532.1	6.96	12.24
5	3.20	41.75	652.7	12.35	12.18	3.43	82.46	465.1	5.54	14.66
6	2.62	15.60	274.3	4.75	28.90	3.03	50.04	194.4	2.57	31.40
7	5.50	178.85	841.3	10.50	7.79	4.49	158.36	536.4	4.40	11.10
8	2.21	12.24	330.7	7.18	24.86	3.75	53.84	176.2	2.30	32.55
9	2.59	20.46	705.0	19.42	11.91	3.40	121.04	431.3	4.64	14.04
10	4.50	11.01	296.8	5.09	27.03	5.77	75.99	159.8	1.30	29.83
11	4.13	51.28	947.1	22.82	8.53	4.73	167.62	546.6	4.74	10.76
12	4.21	15.35	333.3	5.76	23.94	7.20	89.62	162.7	1.17	27.19
13	3.68	37.16	887.7	22.47	9.27	4.70	157.95	540.8	5.60	11.04
14	2.93	13.90	342.9	7.72	23.73	4.68	81.96	191.2	1.46	26.51
15	1.62	15.91	450.4	1.81	18.47	2.51	94.08	257.8	.50	21.46
16	2.30	33.99	985.9	.41	8.48	10.87	402.42	599.9	.38	7.01
17	4.20	53.65	895.6	19.17	8.94	5.35	158.42	538.7	5.98	11.03
18	3.37	23.91	379.1	5.97	20.77	4.57	69.83	240.0	3.12	24.37
19	3.53	41.08	769.0	13.81	10.51	4.26	108.20	495.4	7.16	13.07
20	3.57	23.17	466.0	6.07	17.28	5.83	95.52	270.6	2.54	20.21
21	6.53	234.23	876.8	7.57	7.01	5.46	202.94	574.5	4.20	9.75
22	3.82	15.69	400.1	7.67	20.32	6.66	91.26	218.7	1.55	23.16
23	5.04	71.23	1003.5	11.80	7.84	7.39	194.47	620.6	5.45	9.35
24	2.65	28.47	624.3	13.66	13.10	3.00	81.27	422.5	6.02	15.86
25	2.47	18.76	426.4	10.44	19.14	4.21	86.99	245.1	2.13	22.46
26	2.30	22.63	675.1	2.81	12.36	4.32	118.76	395.7	.55	14.89
27	3.19	33.53	808.1	19.45	10.19	3.92	125.49	477.2	5.73	12.92
28	3.82	20.59	442.5	8.49	18.22	4.98	99.25	236.3	1.64	21.75
29	3.61	56.43	785.1	6.72	10.03	5.75	151.19	498.3	5.68	11.77
30	2.93	43.78	645.9	13.25	12.26	3.12	90.14	409.3	4.72	15.82
31	2.12	15.29	470.6	11.74	17.70	5.36	90.42	258.6	2.38	21.25
32	2.36	24.56	585.2	2.36	14.06	4.71	137.22	327.9	.53	15.89
BAG (CALC.)	3.21	35.66	591.8	11.79	13.49	4.40	120.16	353.4	3.36	15.96
BAG (ACT.)	3.27	34.83	591.8	11.97	13.51	4.48	119.26	353.4	3.45	15.99
33	.46	4.55	110.6	.08	74.46	1.27	39.48	61.6	.07	69.53
34	5.80	52.36	1351.4	.89	6.11	11.98	391.63	882.6	.79	5.78
35	3.50	22.28	795.4	.74	10.55	5.55	167.63	465.5	.42	11.89
36	2.33	14.09	521.3	.60	16.11	3.48	101.26	350.6	.28	17.04
37	1.26	6.35	409.0	2.07	20.98	1.73	23.53	301.4	.89	25.81
38	1.28	4.87	440.9	8.45	19.61	1.85	29.82	290.6	3.79	25.85
39	1.68	12.72	526.9	13.14	16.07	2.55	91.84	300.9	3.02	19.58

EMISSION RESULTS IN GRAMS PER MILE (PER MINUTE FOR IDLE)
FUEL ECONOMY IN MILES PER GALLON (PER MINUTE FOR IDLE)

APPENDIX H

LISTING OF MODAL RESULTS ON INDIVIDUAL VEHICLES

ST. LOUIS

	VEH	YEAR	MAKE	MODL	CID	VEH	YEAR	MAKE	MODL	CID
	0197	1970	PONT	LEMA	350	0198	1970	DATS	510	97
MODE NO.	HC	CO	CO2	NOXC	FUEL ECONOMY	HC	CO	CO2	NOXC	FUEL ECONOMY
1	8.43	89.10	1089.9	12.56	7.06	4.27	26.32	447.0	12.17	17.68
2	4.91	46.15	325.4	1.50	21.47	1.28	7.25	178.1	1.36	45.86
3	13.14	217.69	1069.3	1.94	6.11	5.77	64.91	512.3	6.04	14.03
4	4.49	15.62	776.2	6.79	10.89	2.63	22.94	308.8	6.70	25.13
5	3.23	12.25	606.9	8.85	13.95	1.82	7.26	293.0	9.80	28.61
6	2.36	11.79	238.6	2.97	33.55	.74	2.76	115.5	2.03	72.66
7	4.09	61.03	777.0	11.58	10.02	2.21	13.75	367.9	13.29	22.39
8	2.19	10.38	263.2	5.80	30.98	.73	2.13	126.8	3.70	67.00
9	2.53	7.02	632.4	12.24	13.62	1.48	2.62	309.4	14.78	27.89
10	5.37	18.36	230.5	3.29	32.11	1.90	3.16	120.5	2.74	67.51
11	3.67	15.59	803.2	17.35	10.57	2.60	8.47	377.1	14.48	22.26
12	7.02	22.62	257.9	5.11	28.11	2.08	3.26	119.4	2.99	67.70
13	4.12	25.17	780.9	16.11	10.65	2.93	9.09	375.7	14.01	22.23
14	3.65	11.00	271.6	4.79	29.54	.95	1.67	144.3	3.81	59.18
15	3.01	17.29	320.6	1.68	24.84	1.29	11.06	138.5	.98	55.49
16	6.04	53.84	726.8	1.45	10.69	2.82	35.59	198.7	1.20	33.67
17	4.86	36.66	810.6	14.37	10.04	2.94	14.01	350.5	10.87	23.25
18	4.18	14.77	282.2	3.88	27.85	.93	4.34	147.8	2.42	56.32
19	3.95	15.58	651.6	10.05	12.89	1.98	11.35	322.3	9.11	25.62
20	6.40	21.56	310.1	4.72	24.36	1.37	5.17	163.4	2.59	50.47
21	5.64	119.70	823.6	10.50	8.62	4.04	40.41	382.1	9.03	19.36
22	6.11	24.66	299.4	4.89	24.83	2.21	3.57	140.2	3.66	58.07
23	8.12	91.05	786.5	10.13	9.29	3.69	33.28	362.5	8.51	20.81
24	2.79	9.66	543.0	10.44	15.65	1.55	5.81	284.0	10.89	29.78
25	2.85	14.25	336.8	6.13	24.11	.86	1.11	170.8	5.02	50.63
26	4.03	23.61	545.6	2.51	14.90	1.77	13.76	208.1	1.17	37.71
27	3.42	19.76	648.4	14.72	12.86	2.17	8.70	328.1	11.89	25.46
28	5.99	22.96	334.1	4.96	22.81	2.19	4.23	150.7	4.29	54.01
29	7.21	75.00	658.6	6.30	11.10	3.26	27.67	355.1	6.76	21.70
30	2.67	9.87	555.3	9.43	15.32	1.69	6.93	295.6	10.88	28.46
31	2.06	13.19	371.6	7.53	22.25	.85	1.29	165.4	5.23	52.16
32	4.54	29.35	445.8	1.99	17.53	1.91	19.10	174.0	1.38	42.25
BAG (CALC.)	4.29	26.37	500.5	9.11	15.98	2.16	8.44	244.9	7.33	33.48
BAG (ACT.)	4.47	26.10	486.4	8.89	16.39	2.27	9.07	241.4	7.33	33.76
33	1.20	21.15	57.0	.04	94.35	.42	5.00	29.7	.02	228.08
34	14.90	247.32	712.1	.48	7.73	4.20	47.06	381.8	.27	18.92
35	7.55	121.43	391.1	.24	14.65	2.85	26.99	393.4	.52	19.95
36	2.49	15.87	482.0	.56	17.24	1.95	18.75	238.6	.35	32.36
37	1.84	7.49	336.4	1.59	25.07	1.25	6.75	190.3	1.77	43.32
38	1.46	3.84	357.5	5.23	24.10	1.17	2.82	185.4	4.27	45.86
39	1.83	9.29	432.3	8.54	19.60	1.41	1.76	227.7	8.65	37.78

EMISSION RESULTS IN GRAMS PER MILE (PER MINUTE FOR IDLE)
FUEL ECONOMY IN MILES PER GALLON (PER MINUTE FOR IDLE)

APPENDIX H

LISTING OF MODAL RESULTS ON INDIVIDUAL VEHICLES

ST. LOUIS

VEH	YEAR	MAKE	MODL	CID
0200	1970	VOLK	SEDA	97

MODE NO.	HC	CO	CO2	NOXC	FUEL ECONOMY
1	7.24	127.61	414.0	2.45	13.92
2	1.16	24.37	281.6	1.21	27.43
3	6.88	260.40	401.6	0.00	10.66
4	1.70	63.00	308.0	.76	21.52
5	1.21	15.41	271.4	3.63	29.64
6	.52	2.88	161.2	2.99	53.02
7	1.54	50.47	289.1	3.69	23.78
8	.58	8.37	163.5	4.58	49.72
9	.93	10.05	286.0	6.45	29.12
10	1.61	14.63	148.9	2.89	50.13
11	3.18	57.71	349.3	5.25	19.72
12	2.94	18.44	167.3	4.04	43.17
13	3.82	59.39	329.5	5.50	20.41
14	.69	10.07	177.1	3.78	45.49
15	.78	34.00	171.7	0.00	38.99
16	2.33	162.10	295.5	0.00	15.92
17	5.27	81.18	322.4	4.24	19.02
18	.51	4.59	203.5	3.38	41.80
19	1.80	51.04	283.7	3.07	24.01
20	.84	10.30	233.7	4.01	35.14
21	5.56	97.58	334.3	3.37	17.57
22	2.00	20.41	195.5	4.08	37.95
23	5.88	118.87	347.9	1.52	16.04
24	1.47	17.05	266.5	4.19	29.79
25	.63	9.33	193.5	5.08	42.24
26	1.65	54.68	271.4	.25	24.48
27	2.56	46.75	288.4	5.12	23.99
28	1.68	19.96	191.9	4.12	38.83
29	3.32	110.64	259.0	.83	20.02
30	1.40	18.65	253.7	3.85	30.87
31	.61	8.53	226.9	5.49	36.63
32	1.57	52.67	228.0	.25	28.11
BAG (CALC.)	2.15	38.48	244.9	3.97	28.43
BAG (ACT.)	2.24	39.64	248.5	4.21	27.92
33	.79	25.20	36.3	.02	113.17
34	7.79	305.79	438.0	.26	9.41
35	2.54	87.45	495.6	.54	13.84
36	1.62	63.75	281.6	.26	22.94
37	.73	3.94	220.9	1.67	38.69
38	.67	1.65	206.3	4.22	42.06
39	.83	10.78	238.2	5.97	34.43

EMISSION RESULTS IN GRAMS PER MILE (PER MINUTE FOR IDLE)
FUEL ECONOMY IN MILES PER GALLON (PER MINUTE FOR IDLE)

APPENDIX H

LISTING OF MODAL RESULTS ON INDIVIDUAL VEHICLES

WASHINGTON D.C.

	VEH	YEAR	MAKE	MODL	CID	VEH	YEAR	MAKE	MODL	CID
	6050	1976	VOLK	RABB	97	6051	1976	VOLK	RABB	97
MODE NO.	HC	CO	CO2	NOXC	FUEL ECONOMY	HC	CO	CO2	NOXC	FUEL ECONOMY
1	.55	3.99	450.9	4.23	19.34	.35	5.49	471.0	1.96	18.46
2	.03	.57	337.1	.63	26.25	.18	3.32	365.4	1.51	23.91
3	.17	.97	545.3	3.77	16.22	.49	6.12	762.5	.63	11.47
4	.21	.10	283.3	2.34	31.23	.24	1.20	318.8	1.29	27.61
5	.19	.19	289.3	3.46	30.59	.26	.99	286.9	2.16	30.68
6	.02	.69	232.2	.62	38.04	.16	.65	241.7	1.56	36.48
7	.34	4.14	333.0	5.64	26.06	.45	15.29	296.2	2.05	27.60
8	.07	.26	274.0	1.28	32.32	.10	.68	247.8	2.18	35.61
9	.13	.42	286.0	4.56	30.92	.18	.33	269.1	2.31	32.85
10	.05	.58	212.9	.87	41.48	.10	.72	230.4	1.22	38.28
11	.25	4.79	375.1	5.20	23.15	.28	16.85	346.8	2.24	23.72
12	.08	.90	254.3	.94	34.67	.09	.80	299.1	1.66	29.53
13	.20	3.40	387.7	4.95	22.55	.22	8.31	379.3	2.33	22.58
14	.06	.11	234.9	1.33	37.72	.04	.86	255.1	1.51	34.59
15	.05	0.00	336.7	.66	26.34	.14	3.33	327.6	.99	26.63
16	.06	.19	648.3	.75	13.68	.19	8.05	605.5	.59	14.34
17	.23	4.17	398.5	3.27	21.87	.21	8.43	399.4	1.35	21.48
18	.03	.65	238.0	.86	37.12	.04	1.33	267.9	1.10	32.86
19	.15	.07	315.2	2.81	28.10	.13	1.81	278.3	1.05	31.52
20	.02	.65	269.2	.76	32.83	.08	1.18	307.1	1.11	28.71
21	.30	6.60	420.1	5.38	20.57	.49	34.51	358.0	1.35	21.45
22	.07	.26	257.4	1.39	34.40	.08	.22	288.5	1.82	30.70
23	.15	1.36	395.5	2.06	22.29	.23	1.85	409.4	.52	21.49
24	.11	1.13	294.8	2.92	29.89	.09	1.05	270.0	1.37	32.64
25	.06	.91	281.6	2.09	31.34	.07	1.22	284.7	2.08	30.95
26	.08	2.50	509.4	1.18	17.28	.17	3.10	560.9	1.14	15.67
27	.18	2.66	350.3	3.65	25.00	.16	3.20	339.0	1.54	25.76
28	.04	.97	284.4	1.60	31.03	.07	1.23	298.6	1.52	29.51
29	.15	1.56	394.8	1.39	22.31	.15	3.17	421.7	.13	20.78
30	.15	2.48	288.3	3.48	30.33	.08	2.70	263.1	1.03	33.16
31	.06	1.39	319.8	2.42	27.55	.06	.78	313.1	2.26	28.22
32	.03	2.22	468.7	1.08	18.79	.12	3.60	511.8	.70	17.14
BAG (CALC.)	.11	1.46	319.0	2.71	27.59	.16	3.84	330.0	1.81	26.37
BAG (ACT.)	.12	1.09	325.9	2.78	27.06	.17	3.62	323.2	1.92	26.95
33	.01	.00	64.7	.06	137.02	.05	.02	84.2	.04	105.14
34	.09	.00	802.0	.71	11.06	.02	.59	1080.0	.47	8.21
35	.12	.00	514.5	.97	17.24	.01	.58	643.2	.58	13.78
36	.10	.00	312.8	.71	28.34	.08	.15	405.7	.47	21.85
37	.04	.05	275.4	1.03	32.21	1.52	.46	271.8	2.29	32.01
38	.03	.05	242.3	1.64	36.60	.18	.08	227.3	2.02	38.93
39	.05	.19	276.4	2.84	32.05	.11	.16	262.3	2.74	33.76

EMISSION RESULTS IN GRAMS PER MILE (PER MINUTE FOR IDLE)
FUEL ECONOMY IN MILES PER GALLON (PER MINUTE FOR IDLE)

APPENDIX H

LISTING OF MODAL RESULTS ON INDIVIDUAL VEHICLES

WASHINGTON D.C.

	VEH	YEAR	MAKE	MODL	CID	VEH	YEAR	MAKE	MODL	CID
	6048	1976	TOYO	CORO	97	6049	1976	TOYO	CORO	133
MODE NO.	HC	CO	CO2	NOXC	FUEL ECONOMY	HC	CO	CO2	NOXC	FUEL ECONOMY
1	2.91	29.78	483.8	7.27	16.44	1.30	13.17	456.1	4.37	18.45
2	.33	7.64	379.2	1.00	22.63	.20	12.00	487.2	.85	17.52
3	1.01	42.25	597.5	4.27	13.31	.49	23.41	607.2	1.82	13.75
4	1.35	10.88	358.7	5.19	23.35	.43	7.67	386.8	2.30	22.18
5	1.31	6.61	341.8	7.28	24.91	.31	5.83	346.3	3.00	24.90
6	.33	5.95	217.5	1.39	38.94	.20	6.82	279.7	2.14	30.49
7	1.29	34.46	389.0	5.34	19.84	1.91	33.96	352.3	5.33	21.56
8	.30	5.05	256.7	2.55	33.42	.24	3.82	317.8	3.14	27.35
9	.77	5.61	295.3	7.13	28.95	.44	4.50	320.1	6.19	27.01
10	.19	4.02	219.0	1.63	39.28	.18	4.92	271.8	1.98	31.68
11	1.55	25.16	439.4	5.78	18.34	1.13	16.72	455.8	7.60	18.27
12	.27	6.05	261.7	2.17	32.63	.28	6.28	338.2	2.37	25.43
13	1.57	22.24	468.7	6.08	17.45	.94	12.76	463.5	7.91	18.24
14	.24	5.17	235.4	2.23	36.33	.18	4.22	290.5	2.14	29.81
15	.27	10.68	347.4	1.28	24.31	.18	15.00	365.6	1.17	22.77
16	.15	15.43	679.2	1.16	12.61	.76	0.00	969.9	.76	9.13
17	1.91	21.87	467.2	6.22	17.48	.88	7.89	480.9	6.43	17.89
18	.22	6.62	245.9	1.32	34.54	.18	8.77	299.5	1.96	28.28
19	1.20	15.24	387.4	5.82	21.38	.44	5.41	378.1	4.40	22.88
20	.28	9.31	274.5	1.56	30.60	.33	13.47	356.6	2.10	23.43
21	3.46	58.81	463.4	3.84	15.66	3.03	60.09	401.4	5.06	17.56
22	.30	6.58	257.9	2.28	32.97	.29	4.37	337.8	2.37	25.68
23	1.74	23.62	500.4	5.24	16.34	.70	10.37	336.4	3.53	25.01
24	.81	9.00	333.6	5.68	25.34	.33	4.72	357.4	4.60	24.26
25	.41	4.75	260.3	2.89	32.99	.20	2.90	358.4	3.02	24.41
26	.46	12.25	467.4	1.77	18.18	.35	13.79	486.7	1.92	17.42
27	1.15	11.48	411.5	5.70	20.49	.60	4.43	424.7	6.18	20.47
28	.36	4.41	268.1	2.32	32.14	.20	3.58	344.5	2.40	25.30
29	1.15	14.54	447.6	3.85	18.72	.61	8.92	381.0	2.53	22.36
30	.92	11.39	312.1	5.55	26.66	.53	4.93	341.5	4.31	25.29
31	.40	5.29	276.1	3.15	31.07	.26	5.10	373.0	3.62	23.25
32	.41	8.44	469.7	1.34	18.33	.25	12.78	544.3	1.44	15.70
BAG (CALC.)	.74	12.30	347.2	3.81	24.06	.52	10.80	390.1	4.16	21.72
BAG (ACT.)	.82	11.75	343.8	3.62	24.33	.58	11.17	383.2	4.16	22.04
33	.09	2.72	43.8	.04	183.50	.09	1.93	59.4	.04	141.51
34	1.59	48.20	617.5	.50	12.71	2.54	44.62	691.2	.69	11.54
35	.80	18.41	638.3	.99	13.25	.41	20.92	631.1	.69	13.34
36	.41	12.09	383.3	.44	21.99	.29	15.02	413.2	.55	20.28
37	.49	6.69	284.9	1.51	29.89	.10	7.24	340.0	.81	25.23
38	.58	5.47	240.5	2.62	35.37	.35	8.20	257.4	2.69	32.71
39	.68	5.02	280.5	5.07	30.54	.26	2.65	309.4	3.77	28.23

EMISSION RESULTS IN GRAMS PER MILE (PER MINUTE FOR IDLE)
FUEL ECONOMY IN MILES PER GALLON (PER MINUTE FOR IDLE)

APPENDIX H

LISTING OF MODAL RESULTS ON INDIVIDUAL VEHICLES

WASHINGTON D.C.

	VEH	YEAR	MAKE	MODL	CID	VEH	YEAR	MAKE	MODL	CID
	6046	1976	DATS	B210	85	6047	1976	DATS	710	119
MODE NO.	HC	CO	CO2	NOXC	FUEL ECONOMY	HC	CO	CO2	NOXC	FUEL ECONOMY
1	2.56	26.65	413.6	5.26	19.14	1.33	51.92	678.1	2.76	11.62
2	.57	3.41	261.9	1.34	32.99	.31	10.13	398.1	1.50	21.39
3	1.40	16.02	381.2	3.46	21.61	.97	51.92	696.0	.58	11.37
4	.91	5.87	323.7	3.00	26.43	.55	12.88	441.3	1.54	19.16
5	.85	4.54	289.8	3.80	29.62	.85	12.12	388.8	3.10	21.62
6	.67	3.20	184.2	2.32	46.38	.33	5.03	273.7	1.86	31.40
7	1.33	36.12	276.0	3.86	26.34	1.15	43.47	412.3	3.70	18.33
8	.83	4.03	232.1	4.04	36.82	.38	7.72	300.0	4.89	28.32
9	1.05	5.77	273.3	7.66	31.06	.63	18.02	363.7	4.95	22.52
10	.59	4.38	184.8	2.60	45.85	.23	7.25	274.7	2.83	30.95
11	1.94	48.23	349.4	5.28	20.57	1.25	50.25	453.4	4.44	16.55
12	.75	5.43	207.2	3.07	40.69	.26	7.63	324.7	3.69	26.29
13	1.88	33.54	351.5	5.82	21.64	1.18	39.35	460.6	4.89	16.87
14	.73	2.35	215.7	3.70	40.03	.23	6.40	314.9	3.50	27.25
15	.60	3.96	277.8	1.64	31.04	.27	5.82	370.5	1.13	23.32
16	.84	11.60	605.1	1.01	14.18	.57	16.67	720.2	.17	11.86
17	1.85	15.36	359.3	5.32	22.80	1.54	31.87	461.2	4.19	17.19
18	.72	3.25	216.4	2.61	39.66	.31	7.01	314.2	1.84	27.21
19	.97	8.94	297.0	4.39	28.25	.69	19.45	355.7	2.92	22.85
20	.84	5.36	237.2	2.62	35.75	.33	7.57	365.8	2.02	23.43
21	2.26	66.78	318.9	3.34	20.59	1.61	62.21	419.4	3.30	16.99
22	.76	4.17	237.5	3.57	36.02	.25	11.11	351.4	3.95	24.01
23	1.31	9.96	279.4	3.67	29.67	.68	32.82	459.4	2.15	17.30
24	1.00	9.66	277.5	4.24	30.00	.52	13.30	332.1	3.40	25.03
25	.85	3.14	240.8	4.64	35.73	.29	9.28	360.8	5.00	23.58
26	.79	4.15	373.8	2.03	23.19	.33	6.53	536.8	1.81	16.19
27	1.33	9.01	329.7	6.39	25.50	.79	16.49	406.7	5.42	20.40
28	.73	2.60	230.6	3.86	37.44	.27	9.35	368.2	3.95	23.13
29	1.18	7.23	311.2	3.09	27.19	.44	22.37	394.0	1.33	20.62
30	1.06	21.43	270.8	3.36	28.83	.76	.15	318.4	3.12	27.65
31	.92	3.34	266.1	4.94	32.36	.33	10.59	402.4	5.57	21.13
32	.73	6.17	329.4	1.91	26.00	.21	10.48	544.4	1.60	15.81
BAG (CALC.)	1.11	12.46	281.8	4.48	29.11	.60	18.06	393.6	4.00	20.94
BAG (ACT.)	1.17	11.61	285.2	4.55	28.89	.66	18.10	390.1	4.16	21.10
33	.13	.38	32.6	.02	264.30	.13	6.30	68.8	.04	112.18
34	1.81	9.32	505.7	.44	16.87	3.62	142.31	712.4	.52	9.37
35	.87	4.87	481.8	1.20	18.03	.48	13.50	653.2	1.03	13.13
36	.72	3.35	321.8	.95	26.95	.42	9.63	427.5	.86	19.99
37	.70	2.09	245.0	1.49	35.44	.26	4.21	331.9	1.28	26.16
38	.84	1.81	203.9	3.51	42.39	.46	4.77	279.4	2.16	30.78
39	.89	2.03	317.8	5.71	27.41	.33	7.00	316.1	4.87	27.04

EMISSION RESULTS IN GRAMS PER MILE (PER MINUTE FOR IDLE)
FUEL ECONOMY IN MILES PER GALLON (PER MINUTE FOR IDLE)

APPENDIX H

LISTING OF MODAL RESULTS ON INDIVIDUAL VEHICLES

WASHINGTON D.C.

	VEH	YEAR	MAKE	MODL	CID	VEH	YEAR	MAKE	MODL	CID
	6044	1976	PONT	GRNP	350	6045	1976	PONT	CATA	400
MODE NO.	HC	CO	CO2	NOXC	FUEL ECONOMY	HC	CO	CO2	NOXC	FUEL ECONOMY
1	.35	4.13	909.3	8.54	9.68	.49	9.78	1196.9	9.10	7.31
2	.05	.57	519.9	.95	17.04	.05	1.68	434.5	.83	20.30
3	.18	0.00	996.2	5.77	8.90	.13	3.02	1188.7	6.61	7.43
4	.11	.63	647.5	4.03	13.68	.13	1.84	745.6	4.38	11.85
5	.13	1.00	526.9	3.94	16.78	.11	.69	613.0	5.25	14.45
6	.08	.53	320.8	.60	27.57	.05	.98	300.5	.60	29.37
7	.67	14.48	749.5	8.76	11.46	.82	19.09	822.8	7.78	10.38
8	.06	.64	367.7	1.76	24.06	.06	.91	373.7	1.36	23.65
9	.67	8.05	564.4	6.00	15.32	.72	16.93	620.5	5.53	13.67
10	.05	.63	355.7	1.04	24.87	0.00	1.64	316.5	.85	27.81
11	.96	29.37	782.8	9.04	10.67	1.40	40.18	878.5	7.52	9.38
12	.06	1.35	374.3	1.48	23.57	0.00	2.19	361.4	1.09	24.33
13	1.04	28.38	807.9	8.31	10.37	1.50	39.92	895.9	7.21	9.21
14	.04	.94	377.2	1.55	23.43	.02	.40	347.8	1.32	25.47
15	0.00	0.00	369.4	.88	24.03	0.00	.16	395.8	1.39	22.41
16	.11	0.00	981.6	3.06	9.04	0.00	0.00	901.4	1.62	9.85
17	.70	22.12	764.8	6.62	11.07	1.34	36.99	904.5	7.07	9.18
18	.05	1.43	407.8	.72	21.63	.02	.51	390.3	.73	22.69
19	.26	4.45	612.0	4.60	14.32	.54	7.40	707.3	4.66	12.32
20	.05	2.17	484.7	.83	18.18	.03	.58	439.8	.79	20.14
21	1.16	33.82	865.5	9.61	9.62	1.77	49.51	971.5	8.48	8.41
22	.06	1.82	424.3	1.77	20.77	.05	.94	401.0	1.46	22.04
23	.08	3.68	806.0	5.51	10.93	.15	6.17	947.0	6.56	9.27
24	.39	7.61	508.0	4.62	17.03	.71	18.27	594.4	4.74	14.19
25	.06	.75	410.4	2.06	21.55	.04	.43	409.6	1.70	21.62
26	0.00	2.58	556.6	1.92	15.83	0.00	.90	609.0	2.59	14.54
27	.61	21.37	663.7	6.87	12.69	1.39	41.00	715.4	5.87	11.32
28	.05	.94	410.8	1.64	21.52	.04	.24	417.7	1.39	21.23
29	.07	1.76	695.1	4.86	12.71	.15	5.59	740.9	5.25	11.83
30	.49	6.41	522.2	4.56	16.63	.96	25.06	597.0	4.46	13.88
31	.07	1.46	437.9	2.38	20.15	.05	.53	485.5	2.00	18.24
32	.03	2.47	535.7	2.08	16.44	.01	.44	538.5	1.40	16.46
BAG (CALC.)	.29	9.64	559.4	4.10	15.42	.42	12.51	585.6	3.71	14.63
BAG (ACT.)	.30	9.34	559.4	4.14	15.43	.45	11.86	589.0	3.75	14.57
33	.02	0.00	110.5	.35	80.31	.02	.00	107.4	.14	82.62
34	.67	.01	1326.8	3.49	6.68	.44	.01	1290.1	1.45	6.87
35	.37	.01	695.9	1.04	12.73	.33	.00	768.4	.59	11.53
36	.17	.00	464.2	.85	19.10	.19	.01	505.7	.55	17.53
37	.20	0.00	373.1	.69	23.75	.11	0.00	403.4	.99	21.98
38	.13	.00	401.1	1.14	22.10	.07	0.00	419.9	1.09	21.13
39	.05	0.00	425.6	2.96	20.85	.05	0.00	438.9	2.71	20.21

EMISSION RESULTS IN GRAMS PER MILE (PER MINUTE FOR IDLE)
FUEL ECONOMY IN MILES PER GALLON (PER MINUTE FOR IDLE)

APPENDIX H

LISTING OF MODAL RESULTS ON INDIVIDUAL VEHICLES

WASHINGTON D.C.

	VEH	YEAR	MAKE	MODL	CID	VEH	YEAR	MAKE	MODL	CID
	6042	1976	PLYM	VOLA	225	6043	1976	PLYM	FURY	318
MODE NO.	HC	CO	CO2	NOXC	FUEL ECONOMY	HC	CO	CO2	NOXC	FUEL ECONOMY
1	5.75	84.40	741.9	11.91	9.94	.64	.72	1154.9	22.82	7.66
2	2.85	15.83	214.8	1.52	35.68	.41	.82	448.8	1.26	19.66
3	8.75	178.06	601.0	2.80	9.77	.45	1.19	1203.2	10.02	7.36
4	2.07	29.50	485.4	6.98	16.49	.33	.25	722.2	13.22	12.26
5	.73	2.85	502.6	9.29	17.42	.30	.13	586.9	13.64	15.09
6	.21	.98	212.4	2.84	41.35	.17	.08	235.4	1.48	37.59
7	.91	11.28	650.1	10.30	13.23	.33	.50	848.8	15.34	10.43
8	.12	1.14	255.6	5.39	34.43	.14	.08	290.7	3.50	30.47
9	.32	2.02	538.2	9.46	16.36	.24	.16	634.4	12.89	13.97
10	2.62	5.23	202.9	3.39	40.45	.31	.20	269.3	1.91	32.79
11	.98	15.02	744.3	12.19	11.51	.35	.43	853.6	17.28	10.38
12	3.01	5.75	225.3	4.29	36.39	.54	.30	311.7	2.22	28.28
13	1.19	17.87	727.8	12.32	11.68	.35	1.00	833.3	17.02	10.62
14	1.06	2.39	231.6	4.79	37.19	.25	.15	307.2	3.06	28.79
15	.77	6.88	229.4	1.84	36.58	.16	.28	332.9	1.91	26.59
16	4.01	169.03	357.1	.30	13.97	.28	2.68	728.2	1.14	12.10
17	2.06	35.99	645.8	10.95	12.52	.38	.35	823.1	17.70	10.76
18	.84	3.17	243.3	3.27	35.37	.24	.11	336.6	1.76	26.29
19	1.47	29.57	551.6	7.57	14.73	.31	.33	667.7	15.11	13.26
20	2.38	8.26	261.7	3.45	31.45	.35	.17	380.8	2.10	23.22
21	1.82	36.79	767.3	11.74	10.68	.37	.96	946.1	16.91	9.35
22	2.72	7.81	265.9	4.69	30.94	.34	.19	344.8	3.26	25.64
23	3.56	75.88	633.5	8.46	11.62	.31	.53	890.8	14.62	9.94
24	.57	3.99	508.9	8.51	17.17	.21	.16	545.0	12.24	16.26
25	.18	1.92	251.7	5.77	34.77	.13	.09	393.5	4.21	22.52
26	1.05	8.87	375.6	2.66	22.59	.16	.27	531.9	2.83	16.66
27	1.15	17.36	626.1	10.51	13.51	.32	.40	677.5	15.59	13.07
28	2.73	5.03	272.7	4.62	30.68	.33	.21	401.6	3.46	22.02
29	3.69	76.41	560.7	6.56	12.82	.23	.53	742.1	10.04	11.94
30	.77	6.76	551.8	7.36	15.71	.22	.19	511.4	12.15	17.32
31	.15	1.54	274.8	7.23	31.96	.10	.09	420.6	5.26	21.08
32	1.27	10.12	288.8	2.04	28.75	.20	.22	539.4	2.49	16.43
BAG (CALC.)	1.68	14.80	431.6	7.40	19.29	.27	.34	539.1	8.53	16.42
BAG (ACT.)	1.78	14.50	421.3	7.40	19.74	.29	.37	532.3	8.46	16.63
33	.91	22.01	34.7	.02	123.01	.51	1.89	87.1	.11	96.84
34	11.18	261.74	394.9	.23	10.54	6.51	23.34	1068.2	1.37	7.89
35	4.65	121.58	301.2	.22	17.51	3.68	10.72	544.6	.69	15.49
36	2.79	52.94	323.9	.37	21.34	2.86	3.93	469.1	1.38	18.32
37	1.15	4.22	280.8	2.82	30.49	.25	.07	370.1	2.67	23.92
38	.20	.11	315.7	4.96	28.05	.10	.08	380.7	3.39	23.28
39	.15	.30	367.6	8.12	24.08	.09	.13	426.5	6.06	20.79

EMISSION RESULTS IN GRAMS PER MILE (PER MINUTE FOR IDLE)
FUEL ECONOMY IN MILES PER GALLON (PER MINUTE FOR IDLE)

APPENDIX H

LISTING OF MODAL RESULTS ON INDIVIDUAL VEHICLES

WASHINGTON D.C.

	VEH	YEAR	MAKE	MODL	CID	VEH	YEAR	MAKE	MODL	CID
	6040	1976	OLDS	CUTL	350	6041	1976	OLDS	DELT	455
MODE NO.	HC	CO	CO2	NOXC	FUEL ECONOMY	HC	CO	CO2	NOXC	FUEL ECONOMY
1	.21	.81	1330.7	6.34	6.66	.32	3.83	1245.2	6.34	7.09
2	.05	.18	398.2	.49	22.27	.07	.27	395.2	.43	22.42
3	.21	.41	1391.9	2.56	6.37	.32	2.75	1306.0	2.67	6.77
4	.16	.19	813.5	2.86	10.90	.22	2.99	753.2	4.23	11.70
5	.13	.39	686.8	3.87	12.90	.16	1.19	648.4	3.68	13.64
6	.07	.50	243.7	.31	36.27	.08	.56	358.3	.35	24.69
7	2.22	111.69	852.5	6.49	8.57	.31	29.52	850.6	3.34	9.88
8	.08	.68	326.8	.94	27.05	.06	.52	383.9	.80	23.06
9	.11	.64	647.0	8.29	13.69	.13	9.80	678.9	2.59	12.78
10	.03	.68	286.1	.77	30.90	.05	.76	320.5	.51	27.58
11	1.12	41.99	883.1	9.58	9.32	.34	46.65	957.5	3.36	8.60
12	.03	.60	284.3	.55	31.11	.04	1.46	362.7	.86	24.31
13	.14	1.93	912.0	9.77	9.70	.20	35.39	950.9	3.17	8.81
14	.03	.64	349.2	1.01	25.33	.03	.94	387.8	.72	22.80
15	.02	1.32	281.7	.90	31.27	.03	.85	402.2	.68	21.99
16	.52	17.99	779.4	.30	10.97	.01	4.57	1006.8	.93	8.75
17	.16	1.47	910.5	8.11	9.72	.28	25.32	923.4	2.60	9.21
18	.06	.97	299.7	.41	29.45	.06	1.09	380.8	.38	23.19
19	.17	.95	846.3	8.40	10.46	.18	8.72	672.7	2.05	12.92
20	.08	1.12	366.0	.42	24.12	.08	1.12	487.3	.54	18.14
21	1.48	53.50	973.5	8.65	8.36	.40	61.98	1016.6	3.09	7.96
22	.06	.97	361.6	.75	24.43	.05	.99	415.9	.89	21.25
23	.17	2.26	990.0	6.01	8.93	.23	16.19	892.6	2.86	9.66
24	.12	.76	669.5	6.22	13.23	.08	5.43	616.6	1.74	14.19
25	.04	.60	356.1	1.57	24.85	.06	.93	466.4	1.28	18.96
26	.12	1.77	458.3	2.46	19.23	.07	2.23	639.6	1.43	13.80
27	.25	3.06	783.5	7.06	11.25	.25	25.22	753.7	1.71	11.18
28	.04	.82	405.5	1.33	21.81	.22	2.16	446.0	.93	19.72
29	.56	7.05	826.8	4.70	10.57	1.33	33.39	743.7	1.63	11.09
30	.41	13.76	698.7	5.81	12.30	.13	12.35	591.5	1.03	14.52
31	.04	.95	414.9	1.81	21.31	.06	1.02	497.0	1.34	17.79
32	.29	2.57	405.0	1.55	21.65	.09	3.88	568.2	1.25	15.45
BAG (CALC.)	.24	7.03	581.9	3.70	14.95	.15	11.80	608.1	1.80	14.15
BAG (ACT.)	.25	6.40	578.5	3.84	15.06	.15	11.24	604.7	1.80	14.25
33	.02	0.00	84.2	.12	105.39	.01	.00	83.6	.06	106.15
34	.59	.01	1010.7	.71	8.77	.44	.01	1026.9	.48	8.63
35	.47	.15	653.5	.46	13.55	.29	0.00	852.3	.48	10.40
36	.29	.00	451.1	.39	19.64	.17	0.00	553.8	.40	16.01
37	.21	0.00	382.0	.77	23.19	.25	0.00	443.2	.44	19.99
38	.13	0.00	448.5	.91	19.77	.09	0.00	465.1	.73	19.07
39	.06	.00	531.2	2.82	16.70	.06	0.00	509.7	2.15	17.41

EMISSION RESULTS IN GRAMS PER MILE (PER MINUTE FOR IDLE)
FUEL ECONOMY IN MILES PER GALLON (PER MINUTE FOR IDLE)

APPENDIX H

LISTING OF MODAL RESULTS ON INDIVIDUAL VEHICLES

WASHINGTON D.C.

	VEH	YEAR	MAKE	MODL	CID	VEH	YEAR	MAKE	MODL	CID
	6038	1976	MERC	COME	250	6039	1976	OLDS	CUTL	260
MODE NO.	HC	CO	CO2	NOXC	FUEL ECONOMY	HC	CO	CO2	NOXC	FUEL ECONOMY
1	.49	.16	577.2	4.91	15.33	.47	8.32	1076.0	5.80	8.14
2	.09	.05	350.5	2.06	25.30	.09	1.74	349.7	.55	25.16
3	.25	.08	760.0	6.28	11.66	.37	7.55	1049.0	3.65	8.36
4	.37	.07	471.7	2.31	18.77	.21	2.33	678.7	3.75	12.99
5	.36	.10	453.2	3.49	19.53	.32	6.36	594.9	3.90	14.65
6	.16	.02	355.3	.41	24.94	.10	.86	282.5	1.20	31.24
7	.42	1.73	600.2	5.35	14.69	3.63	165.77	751.7	5.32	8.67
8	.12	.03	420.5	1.04	21.08	.11	.79	357.5	2.68	24.72
9	.21	.22	553.8	4.35	16.00	1.77	50.85	607.2	5.51	12.81
10	.10	.04	362.9	.70	24.43	.08	.81	316.9	2.11	27.87
11	.27	.47	714.9	6.46	12.39	2.83	116.45	774.4	6.30	9.18
12	.10	.04	420.0	.81	21.11	.09	1.27	361.6	2.22	24.39
13	.23	.33	685.3	6.60	12.93	2.37	92.43	776.3	7.09	9.55
14	.10	.03	403.3	1.06	21.99	.07	1.01	365.9	2.31	24.14
15	.05	.03	371.0	3.27	23.91	.04	1.51	399.8	.64	22.06
16	.15	0.00	500.5	2.43	17.72	.19	6.71	734.2	1.02	11.91
17	.32	.13	593.0	5.22	14.94	.81	21.62	766.5	6.37	11.05
18	.12	.03	409.6	.57	21.64	.04	.61	365.0	1.45	24.25
19	.30	.07	442.3	4.68	20.02	1.87	42.70	680.9	4.77	11.77
20	.14	.03	435.8	.63	20.34	.06	1.24	407.1	1.43	21.69
21	.34	1.37	731.3	5.97	12.08	4.11	199.29	781.4	4.89	8.01
22	.10	.05	470.1	1.12	18.86	.08	1.05	432.0	2.49	20.45
23	.23	.08	466.3	4.41	19.00	.23	4.93	749.7	5.54	11.71
24	.20	.15	395.9	3.96	22.37	1.62	51.38	567.5	4.19	13.58
25	.12	.03	514.0	1.46	17.25	.08	.54	406.5	3.59	21.77
26	.08	.05	516.0	5.18	17.19	.07	1.19	565.0	1.71	15.65
27	.22	.14	545.9	4.86	16.23	1.71	54.90	686.4	5.58	11.41
28	.14	.05	487.0	1.16	18.21	.09	.43	411.7	2.89	21.51
29	.19	.00	387.9	3.34	22.84	.43	9.13	677.4	4.44	12.81
30	.22	.47	395.9	4.46	22.33	2.39	82.82	562.2	3.55	12.68
31	.12	.05	555.3	1.80	15.97	.09	.77	438.9	3.74	20.15
32	.07	.05	524.1	4.11	16.92	.07	0.00	481.1	1.32	18.44
BAG (CALC.)	.16	.22	510.5	3.04	17.36	.76	29.72	547.1	3.99	14.89
BAG (ACT.)	.17	.22	507.0	3.01	17.47	.77	28.68	519.8	4.02	15.65
33	.03	.00	82.0	.43	108.09	.01	0.00	66.9	.11	132.54
34	.38	.01	987.1	3.24	8.98	.23	.00	825.7	.45	10.74
35	.26	.01	503.1	1.38	17.61	.11	.00	446.4	.22	19.87
36	.20	0.00	328.6	.92	26.96	.20	.00	419.9	.30	21.11
37	.11	0.00	294.0	3.35	30.16	.14	0.00	351.2	.97	25.24
38	.17	.02	371.0	.67	23.89	.09	0.00	394.5	2.56	22.48
39	.09	.04	440.0	1.82	20.16	.08	.01	482.5	4.91	18.38

EMISSION RESULTS IN GRAMS PER MILE (PER MINUTE FOR IDLE)
FUEL ECONOMY IN MILES PER GALLON (PER MINUTE FOR IDLE)

APPENDIX H

LISTING OF MODAL RESULTS ON INDIVIDUAL VEHICLES

WASHINGTON D.C.

	VEH	YEAR	MAKE	MODL	CID	VEH	YEAR	MAKE	MODL	CID
	6036	1976	FORD	GRAN	302	6037	1976	MERC	MARQ	400
MODE NO.	HC	CO	CO2	NOXC	FUEL ECONOMY	HC	CO	CO2	NOXC	FUEL ECONOMY
1	.93	.76	1110.8	5.65	7.96	.90	3.33	1296.9	10.46	6.80
2	.27	1.13	465.0	1.39	18.98	.18	.93	606.1	1.61	14.59
3	.77	1.36	1033.4	5.38	8.55	.54	3.97	1142.6	7.99	7.71
4	.60	.94	731.1	2.41	12.08	.62	3.83	786.3	6.06	11.17
5	.66	.46	635.5	3.33	13.90	.49	.36	713.3	5.26	12.40
6	.43	.55	281.7	.52	31.26	.43	.30	434.6	.89	20.33
7	1.05	24.92	886.0	3.92	9.56	1.47	128.41	938.2	2.42	7.75
8	.60	.38	321.1	.99	27.43	.32	.29	506.3	1.31	17.48
9	.67	3.64	659.6	4.22	13.30	.50	20.92	725.7	2.51	11.68
10	.38	.84	327.3	.92	26.91	.28	.21	389.3	1.07	22.73
11	1.26	92.91	795.9	2.80	9.38	1.33	178.56	982.0	1.26	7.01
12	.47	2.03	333.7	1.06	26.23	.28	.64	475.3	1.38	18.60
13	.87	40.23	835.1	3.98	9.85	1.11	125.28	983.4	2.47	7.50
14	.40	.40	369.7	.99	23.88	.22	.13	438.5	1.34	20.20
15	.35	0.00	364.2	.90	24.29	.18	.11	575.1	.96	15.41
16	.25	0.00	966.5	5.06	9.18	.21	0.00	1032.5	6.74	8.59
17	.76	1.78	803.9	3.83	10.97	.64	6.21	961.3	5.10	9.12
18	.38	.05	345.8	.78	25.57	.19	.38	491.2	1.04	18.02
19	.68	9.24	712.4	2.66	12.17	.52	2.37	687.5	4.96	12.81
20	.41	.53	419.8	1.08	21.03	.24	.04	539.1	1.27	16.44
21	.88	17.97	948.5	3.97	9.06	1.67	186.10	1055.5	2.26	6.56
22	.46	.87	400.5	1.27	22.00	.23	.29	515.3	1.55	17.18
23	.58	1.67	882.8	3.61	10.00	.41	1.34	967.2	7.45	9.14
24	.56	1.34	580.9	3.24	15.18	.40	8.23	658.9	2.95	13.19
25	.44	.53	422.2	1.55	20.91	.22	.81	549.3	1.88	16.10
26	.73	.68	570.5	1.60	15.46	.22	.93	747.1	2.04	11.85
27	.60	1.67	708.2	4.12	12.45	.50	16.18	813.3	3.47	10.56
28	.42	.85	461.0	1.57	19.14	.28	1.00	535.6	1.79	16.50
29	.48	1.30	746.2	3.40	11.84	.44	12.29	745.2	5.73	11.59
30	.59	6.01	639.6	2.68	13.64	.59	28.22	598.0	2.41	13.78
31	.50	.71	454.7	1.67	19.40	.21	.84	596.0	2.08	14.84
32	.40	1.76	556.3	1.41	15.84	.23	3.12	686.4	1.92	12.82
BAG (CALC.)	.51	6.65	572.8	2.57	15.18	.43	29.90	683.5	2.55	12.13
BAG (ACT.)	.54	6.46	569.3	2.57	15.27	.43	29.45	683.5	2.72	12.14
33	.07	0.00	117.7	.51	75.28	.04	.00	133.8	.60	66.28
34	1.46	.01	1440.6	4.89	6.14	.60	.02	1608.2	5.37	5.51
35	.55	0.00	717.1	2.43	12.35	.30	0.00	814.9	2.30	10.88
36	.32	0.00	471.2	1.32	18.80	.32	0.00	551.0	1.24	16.08
37	1.08	.10	375.5	.77	23.41	.39	.00	451.2	1.24	19.62
38	.32	.16	441.0	1.08	20.07	.17	.07	487.1	1.33	18.20
39	.25	.43	513.1	2.72	17.25	.13	.12	556.2	2.32	15.94

EMISSION RESULTS IN GRAMS PER MILE (PER MINUTE FOR IDLE)
FUEL ECONOMY IN MILES PER GALLON (PER MINUTE FOR IDLE)

APPENDIX H

LISTING OF MODAL RESULTS ON INDIVIDUAL VEHICLES

WASHINGTON D.C.

	VEH	YEAR	MAKE	MODL	CID	VEH	YEAR	MAKE	MODL	CID
	6034	1976	FORD	GRAN	250	6035	1976	FORD	GRAN	302
MODE NO.	HC	CO	CO2	NOXC	FUEL ECONOMY	HC	CO	CO2	NOXC	FUEL ECONOMY
1	.57	33.35	1177.0	3.31	7.21	.95	2.48	1039.1	3.95	8.49
2	.05	1.36	322.2	1.56	27.35	.29	1.06	514.8	1.69	17.16
3	.33	3.80	1124.5	5.32	7.84	.69	2.76	1075.4	5.14	8.20
4	.26	1.06	698.3	1.69	12.66	.76	.77	679.4	2.20	12.99
5	.28	21.01	622.1	1.56	13.53	.65	1.12	595.5	2.81	14.81
6	.07	.58	267.4	.34	33.06	.33	.62	348.9	.40	25.29
7	1.35	130.66	704.2	2.33	9.71	1.08	27.44	829.4	3.75	10.13
8	.06	1.02	341.8	.86	25.83	.54	.72	415.6	.36	21.21
9	.98	75.03	557.2	2.25	13.09	.56	1.18	609.8	4.32	14.47
10	.02	1.07	294.1	.58	30.00	.30	.64	362.5	.62	24.35
11	1.81	164.92	761.5	2.58	8.65	.68	7.21	856.4	3.94	10.20
12	.04	2.02	327.7	.65	26.81	.22	1.49	406.0	1.06	21.70
13	1.78	146.09	791.8	2.79	8.64	.65	5.30	856.5	4.76	10.24
14	.04	1.80	358.4	.78	24.56	.24	.58	376.0	.37	23.50
15	.04	2.51	330.6	2.13	26.52	.13	.70	429.9	1.77	20.58
16	.15	6.53	660.7	3.67	13.22	.47	1.52	955.5	5.14	9.25
17	1.40	116.49	822.4	2.58	8.79	.53	1.89	846.7	2.71	10.42
18	.06	1.63	321.1	.38	27.41	.06	.54	401.9	1.21	22.03
19	.86	74.56	692.2	1.92	10.93	.55	2.25	662.7	2.51	13.29
20	.11	1.77	388.5	.42	22.66	.14	.81	495.5	1.84	17.85
21	1.95	159.74	691.6	2.42	9.35	.67	22.56	955.1	4.08	8.94
22	.06	2.54	374.6	.77	23.44	.10	.38	456.1	1.31	19.42
23	.20	11.77	846.4	2.87	10.25	.52	1.34	931.5	1.35	9.49
24	.70	62.81	509.3	2.22	14.55	.49	1.13	573.0	4.39	15.40
25	.05	.98	411.2	1.07	21.50	.12	.52	467.5	.41	18.94
26	.12	1.33	464.8	4.22	19.00	.19	.65	579.9	2.98	15.26
27	1.41	104.25	656.5	2.60	10.76	.58	1.57	705.0	4.41	12.51
28	.06	.53	411.6	.88	21.51	.13	.12	452.7	1.05	19.58
29	.17	.84	722.3	3.81	12.26	.52	.35	774.9	1.40	11.42
30	.90	95.89	505.8	2.04	13.46	.52	3.36	613.8	3.84	14.30
31	.11	3.15	438.7	.95	19.99	.10	.45	449.1	.37	19.72
32	.07	.68	411.3	2.93	21.51	.16	1.08	558.4	2.84	15.83
BAG (CALC.)	.67	51.78	536.9	1.71	14.31	.42	2.53	588.6	2.14	14.94
BAG (ACT.)	.72	50.53	533.4	1.67	14.43	.43	2.27	592.1	2.20	14.87
33	.04	.00	80.0	.97	110.85	.04	0.00	121.6	.56	72.94
34	.66	.01	937.8	6.82	9.44	.66	0.00	1461.5	5.15	6.06
35	.22	.01	525.4	1.85	16.87	.36	0.00	740.0	2.31	11.98
36	.17	0.00	350.4	1.87	25.29	.27	.00	486.3	1.27	18.22
37	.15	0.00	316.6	2.10	27.99	.49	.07	406.8	.69	21.73
38	.10	.00	429.3	.59	20.66	.27	.19	451.5	.78	19.61
39	.06	.28	502.2	1.55	17.65	.20	.53	518.1	1.60	17.08

EMISSION RESULTS IN GRAMS PER MILE (PER MINUTE FOR IDLE)
FUEL ECONOMY IN MILES PER GALLON (PER MINUTE FOR IDLE)

APPENDIX H

LISTING OF MODAL RESULTS ON INDIVIDUAL VEHICLES

WASHINGTON D.C.

	VEH	YEAR	MAKE	MODL	CID	VEH	YEAR	MAKE	MODL	CID
	6032	1976	FORD	LTD	400	6033	1976	FORD	TORI	351
MODE NO.	HC	CO	CO2	NOXC	FUEL ECONOMY	HC	CO	CO2	NOXC	FUEL ECONOMY
1	1.40	11.57	1209.9	5.25	7.20	3.56	125.85	973.4	2.48	7.51
2	.13	2.27	645.1	1.19	13.68	1.55	43.78	404.0	2.05	18.58
3	.83	4.98	1252.3	5.05	7.03	8.01	304.85	708.2	.78	7.32
4	.75	6.82	838.0	4.92	10.43	1.92	60.74	613.4	2.14	12.41
5	.62	4.07	695.6	3.61	12.61	.31	1.13	593.6	2.35	14.88
6	.37	1.07	403.0	.83	21.87	.29	1.57	401.8	1.33	21.90
7	2.04	199.39	840.3	2.07	7.65	.97	111.00	750.1	2.08	9.57
8	.21	1.98	508.9	1.02	17.31	.18	.83	531.7	2.24	16.63
9	1.16	92.59	660.3	1.72	10.96	.38	36.17	638.5	1.91	12.74
10	.13	1.48	458.7	.90	19.24	1.97	14.62	386.9	1.43	21.33
11	1.84	211.09	1002.3	1.35	6.62	1.43	136.11	854.5	1.33	8.27
12	.13	1.03	497.2	.93	17.78	3.19	12.62	431.8	1.95	19.22
13	1.41	150.22	1013.7	2.23	7.08	1.37	123.92	885.1	1.74	8.19
14	.11	1.63	476.0	1.12	18.53	1.06	6.37	406.5	1.86	21.14
15	.09	1.26	474.2	1.21	18.63	.46	18.05	438.5	.81	18.95
16	.35	4.94	867.2	3.76	10.13	3.14	224.25	660.9	.45	8.67
17	.90	36.77	1033.5	2.93	8.11	1.44	32.14	923.5	2.82	9.07
18	.18	1.05	467.6	1.12	18.89	.58	10.21	404.3	1.54	21.02
19	.75	23.48	861.1	3.41	9.86	1.33	40.40	672.1	2.00	12.00
20	.15	1.15	652.9	1.33	13.55	2.01	22.47	448.0	1.43	18.13
21	2.24	261.05	1055.2	1.84	6.03	1.81	199.52	923.3	1.54	7.14
22	.14	2.27	584.4	1.11	15.08	2.46	15.40	485.1	2.19	17.16
23	.55	4.48	1009.0	5.56	8.72	2.50	86.59	819.5	1.80	9.21
24	.90	64.84	646.8	2.02	11.81	.24	27.64	614.3	1.91	13.48
25	.11	1.56	605.4	1.36	14.59	.15	1.96	463.6	2.64	19.00
26	.16	.42	773.0	2.05	11.46	.48	4.49	535.3	3.17	16.32
27	.81	52.29	870.8	2.37	9.29	.88	38.34	829.1	2.05	9.95
28	.11	1.27	641.7	1.38	13.78	1.98	15.63	448.0	2.33	18.54
29	.40	.66	716.7	5.02	12.34	2.74	89.32	727.9	1.60	10.12
30	1.09	95.63	675.8	1.66	10.70	.35	47.77	688.9	1.45	11.60
31	.13	1.64	711.6	1.48	12.42	.13	1.02	484.4	3.08	18.25
32	.09	0.00	725.8	1.57	12.22	.82	10.99	556.7	2.16	15.39
BAG (CALC.)	.57	45.52	725.6	1.86	11.11	1.44	47.76	610.9	2.11	12.85
BAG (ACT.)	.57	46.89	715.4	1.82	11.22	1.59	49.10	604.1	2.08	12.93
33	.05	.00	133.9	.41	66.21	1.20	33.07	74.4	.04	68.17
34	.68	0.00	1586.0	3.40	5.59	13.22	378.43	938.6	.46	5.63
35	.34	0.00	779.7	1.54	11.37	5.56	147.49	604.6	.35	10.39
36	.25	.01	542.3	.79	16.34	3.52	94.16	418.8	.23	15.36
37	.24	.03	466.6	1.24	18.99	.17	.03	407.2	1.19	21.76
38	.16	.13	517.7	1.68	17.12	.17	.11	478.8	1.38	18.51
39	.10	1.49	636.2	1.75	13.89	.18	.21	554.7	3.04	15.97

EMISSION RESULTS IN GRAMS PER MILE (PER MINUTE FOR IDLE)
FUEL ECONOMY IN MILES PER GALLON (PER MINUTE FOR IDLE)

APPENDIX H

LISTING OF MODAL RESULTS ON INDIVIDUAL VEHICLES

WASHINGTON D.C.

	VEH	YEAR	MAKE	MODL	CID	VEH	YEAR	MAKE	MODL	CID
	6030	1976	DODG	ASPE	225	6031	1976	FORD	PINT	140
MODE NO.	HC	CO	CO2	NOXC	FUEL ECONOMY	HC	CO	CO2	NOXC	FUEL ECONOMY
1	1.21	22.90	1144.2	7.30	7.50	1.41	10.40	629.9	6.42	13.64
2	.26	1.58	365.0	.73	24.10	.11	.31	317.1	1.09	27.92
3	.81	6.77	964.6	3.22	9.08	.93	23.98	838.6	2.74	10.09
4	.56	9.37	701.6	6.91	12.36	.29	.70	393.4	3.27	22.45
5	.41	7.87	631.0	8.65	13.77	.30	1.41	323.4	5.46	27.18
6	.39	.54	319.9	.51	27.57	.10	.08	229.6	1.20	38.59
7	.97	78.20	777.2	14.36	9.83	.48	2.45	416.4	5.66	21.04
8	.39	.96	374.6	1.41	23.52	.15	.24	261.1	2.33	33.88
9	.63	73.23	585.9	10.75	12.63	.22	.18	360.8	7.56	24.53
10	.32	1.12	309.7	.19	28.41	.16	.15	219.0	1.51	40.40
11	1.15	108.76	775.1	12.46	9.35	1.40	4.16	510.7	6.12	17.01
12	.47	0.00	349.6	.12	25.28	.12	.35	258.2	1.73	34.25
13	1.15	75.39	776.5	13.21	9.88	.97	5.35	508.6	6.53	17.06
14	.40	.31	325.8	.29	27.10	.09	.11	237.8	1.89	37.25
15	.29	1.35	332.1	.27	26.48	.21	.13	277.9	1.63	31.85
16	.84	3.74	531.0	.63	16.45	.75	1.97	620.0	.50	14.19
17	.50	21.75	825.6	7.97	10.30	1.02	5.49	526.9	6.56	16.47
18	.30	1.35	322.6	.32	27.26	.08	.02	242.1	1.16	36.61
19	.68	27.77	623.7	7.90	13.26	.69	3.24	394.8	4.69	22.07
20	.36	1.45	367.1	.64	23.96	.11	.06	288.3	1.48	30.73
21	1.55	93.02	823.4	15.32	9.11	2.89	8.11	505.1	4.46	16.84
22	.44	1.12	369.5	.58	23.82	.09	.24	285.0	2.19	31.07
23	.42	21.77	727.0	5.26	11.64	.46	5.72	578.2	6.77	15.08
24	.82	18.84	580.0	8.72	14.50	.20	.90	343.7	6.93	25.67
25	.52	.16	376.6	.57	23.45	.10	.19	265.1	2.34	33.40
26	.37	0.00	545.8	.92	16.23	.08	.64	481.6	2.12	18.38
27	.47	13.96	707.3	9.92	12.15	.43	3.39	444.7	7.92	19.66
28	.38	.67	389.8	.97	22.64	.11	.32	257.8	1.88	34.31
29	.54	10.89	641.4	3.14	13.44	.46	5.46	499.3	5.37	17.43
30	1.43	51.47	520.7	9.40	14.64	.22	1.24	379.1	5.32	23.25
31	.73	.86	435.8	.50	20.20	.10	.22	300.7	2.60	29.46
32	.36	.54	434.2	.82	20.35	.27	.49	434.6	1.43	20.35
BAG (CALC.)	.55	21.25	542.6	5.31	15.36	.36	1.92	364.3	4.17	24.09
BAG (ACT.)	.60	22.53	546.0	5.20	15.22	.39	2.05	357.4	4.25	24.53
33	.05	.13	68.9	.20	128.08	.01	0.00	68.8	.02	128.86
34	2.46	4.52	803.7	2.19	10.84	.15	.00	896.7	.22	9.89
35	1.41	1.89	527.1	1.96	16.60	.08	.00	481.3	.22	18.43
36	.32	.29	435.5	1.33	20.31	.05	.00	382.8	.22	23.18
37	.29	.22	378.5	.95	23.37	.07	.00	256.3	1.74	34.59
38	.20	.28	400.7	3.02	22.09	.09	.02	237.1	1.53	37.39
39	.17	.77	493.8	8.02	17.91	.13	.14	279.0	3.05	31.74

EMISSION RESULTS IN GRAMS PER MILE (PER MINUTE FOR IDLE)
FUEL ECONOMY IN MILES PER GALLON (PER MINUTE FOR IDLE)

APPENDIX H

LISTING OF MODAL RESULTS ON INDIVIDUAL VEHICLES

WASHINGTON D.C.

	VEH	YEAR	MAKE	MODL	CID	VEH	YEAR	MAKE	MODL	CID
	6028	1976	CHEV	CHET	85	6029	1976	DODG	ASPE	318
MODE NO.	HC	CO	CO2	NOXC	FUEL ECONOMY	HC	CO	CO2	NOXC	FUEL ECONOMY
1	.57	12.88	643.4	7.66	13.34	1.31	13.13	1017.2	3.68	8.52
2	.02	3.15	234.6	1.11	37.03	.17	.22	360.5	1.67	24.56
3	.13	11.69	661.4	4.59	13.05	1.23	12.23	1153.5	1.07	7.54
4	.07	4.65	448.7	4.60	19.45	.47	1.53	638.9	1.63	13.81
5	.07	3.52	394.0	6.03	22.20	.36	.06	575.0	3.22	15.40
6	.02	2.32	178.4	.49	48.73	.30	.34	283.2	.39	31.18
7	1.68	116.80	394.8	2.29	15.21	.54	2.03	787.2	7.42	11.21
8	.04	2.49	214.5	1.30	40.61	.24	.42	304.0	1.27	29.06
9	.42	19.83	403.0	3.49	20.38	.30	.43	584.9	4.04	15.13
10	.06	4.73	193.6	.91	44.10	.63	2.42	275.1	.77	31.60
11	2.04	127.84	435.0	2.69	13.82	.43	4.14	830.4	6.94	10.59
12	.10	8.06	214.3	.99	39.05	.81	3.82	315.2	.92	27.41
13	1.94	113.61	460.4	3.47	13.76	1.05	33.90	772.9	4.29	10.70
14	.06	3.53	203.8	1.35	42.36	.36	1.03	329.1	1.12	26.75
15	.02	5.16	198.7	2.19	42.90	.11	1.15	337.9	2.78	26.10
16	.33	37.09	428.8	.89	18.18	1.38	22.98	641.2	.28	13.02
17	.28	12.01	519.6	5.89	16.46	.75	10.13	736.7	3.61	11.76
18	.01	5.63	209.4	.74	40.66	.34	.69	347.6	.55	25.38
19	.16	9.28	459.2	5.85	18.71	.58	12.29	545.5	1.54	15.66
20	.05	8.20	242.2	.80	34.78	.45	.61	403.9	.56	21.84
21	2.96	196.17	455.4	1.85	11.48	.70	9.18	786.3	5.73	11.05
22	.12	7.75	234.4	1.47	35.94	.65	2.14	358.3	1.27	24.40
23	.64	23.29	533.4	5.28	15.52	.67	12.71	718.1	1.76	11.99
24	.27	13.90	384.9	4.50	21.77	.30	1.31	535.2	3.04	16.49
25	.04	2.56	236.2	1.91	36.93	.20	.26	396.0	1.57	22.35
26	.00	6.07	280.7	3.68	30.58	.25	1.49	588.9	3.96	14.99
27	.52	21.87	451.4	4.04	18.21	.41	3.96	629.9	3.93	13.92
28	.11	5.83	237.8	1.64	35.89	.61	1.83	401.8	1.27	21.83
29	.56	18.31	461.0	4.23	18.06	.57	14.59	518.5	1.39	16.34
30	.91	45.38	364.2	3.60	20.24	.29	1.94	468.3	3.03	18.79
31	.02	.81	271.4	2.23	32.54	.16	.77	467.0	1.91	18.94
32	.02	5.34	259.7	3.17	33.10	.20	3.24	491.2	3.66	17.86
BAG (CALC.)	.47	27.26	330.4	2.62	23.69	.48	4.36	515.5	2.89	16.94
BAG (ACT.)	.50	25.86	327.0	2.59	24.04	.53	4.11	515.5	2.98	16.95
33	.10	1.18	53.7	.06	158.93	.17	1.03	86.8	.06	99.75
34	.22	.00	645.4	1.14	13.74	4.37	38.85	1000.0	1.35	8.26
35	.11	.00	345.0	.68	25.70	1.68	9.84	623.2	.78	13.78
36	.08	.00	283.7	1.44	31.25	1.03	4.51	446.1	.81	19.44
37	.05	.00	237.9	2.31	37.27	.41	.22	359.0	1.70	24.61
38	.03	0.00	263.6	1.27	33.66	.31	.21	383.1	.75	23.09
39	.03	0.00	306.8	3.30	28.92	.18	.25	423.1	2.30	20.93

EMISSION RESULTS IN GRAMS PER MILE (PER MINUTE FOR IDLE)
FUEL ECONOMY IN MILES PER GALLON (PER MINUTE FOR IDLE)

APPENDIX H

LISTING OF MODAL RESULTS ON INDIVIDUAL VEHICLES

WASHINGTON D.C.

	VEH	YEAR	MAKE	MODL	CID	VEH	YEAR	MAKE	MODL	CID
	6026	1976	CHEV	MONT	350	6027	1976	CHEV	CAMA	250
MODE NO.	HC	CO	CO2	NOXC	FUEL ECONOMY	HC	CO	CO2	NOXC	FUEL ECONOMY
1	.34	9.93	1085.5	8.05	8.05	5.47	90.65	597.0	9.12	11.73
2	.09	1.74	423.9	.23	20.79	1.54	17.87	316.3	.56	25.41
3	.33	15.82	1298.0	1.97	6.70	9.80	203.71	723.3	9.03	8.26
4	.18	2.57	745.9	3.67	11.83	.52	2.94	581.2	4.99	15.11
5	.13	.85	638.5	5.44	13.86	.15	7.61	350.0	5.83	24.49
6	.10	.74	281.7	.47	31.35	0.00	.62	262.1	1.62	33.74
7	1.13	45.48	831.3	7.70	9.79	1.14	28.15	433.0	5.99	18.46
8	.07	1.05	340.9	1.20	25.89	0.00	1.12	305.0	2.16	28.93
9	.09	.95	646.5	8.61	13.69	.03	.67	394.8	6.86	22.41
10	.06	.70	296.2	.91	29.84	1.34	4.21	241.1	1.43	35.22
11	.29	11.45	861.0	8.00	10.09	1.93	76.31	507.1	5.95	14.02
12	.06	1.58	337.0	1.01	26.13	1.40	4.54	291.4	1.82	29.29
13	.24	11.09	834.8	7.12	10.40	1.88	59.44	526.1	7.51	14.19
14	.03	.73	345.4	1.08	25.61	.27	.95	276.3	2.03	31.85
15	.03	.44	383.9	.71	23.07	.86	20.18	311.9	.69	25.63
16	.10	1.68	951.7	.82	9.30	3.48	149.61	678.0	.52	9.60
17	.13	7.79	851.3	5.75	10.27	2.66	4.35	501.7	8.28	17.17
18	.05	0.00	385.7	.45	23.00	.37	1.42	274.5	1.88	31.94
19	.08	0.00	723.5	6.16	12.26	1.68	41.40	390.2	5.65	19.27
20	.06	.06	424.4	.57	20.90	1.10	4.48	352.6	1.84	24.44
21	1.40	18.44	853.0	6.75	10.01	4.42	115.42	453.4	4.20	13.68
22	.06	1.05	380.3	.94	23.23	1.93	3.53	328.3	1.82	26.11
23	.17	4.86	824.8	4.65	10.66	4.95	94.07	402.2	6.96	15.69
24	.07	2.45	598.5	4.73	14.73	.27	8.28	355.5	7.33	24.03
25	.03	1.41	431.9	1.21	20.44	.03	.08	332.3	2.30	26.69
26	.03	1.49	556.2	.95	15.89	1.78	50.10	416.1	1.17	17.73
27	.08	6.01	702.2	4.39	12.47	1.45	31.06	482.9	7.05	16.55
28	.03	.94	454.3	.97	19.47	2.13	5.18	304.6	1.94	27.78
29	.11	7.51	733.3	2.78	11.91	4.68	99.31	349.8	5.74	17.05
30	.06	3.29	626.7	4.94	14.04	.38	12.73	367.9	6.31	22.81
31	.05	2.70	459.6	1.14	19.13	.04	.34	349.1	2.67	25.38
32	.05	2.34	556.2	1.08	15.85	1.67	47.91	349.8	.98	20.62
BAG (CALC.)	.15	6.92	562.5	3.10	15.47	1.59	25.74	390.9	4.04	20.34
BAG (ACT.)	.15	6.74	562.5	3.10	15.47	1.73	24.91	387.5	4.04	20.54
33	.01	.00	93.2	.11	95.23	1.06	15.58	45.9	.02	120.35
34	.30	0.00	1142.7	.76	7.76	8.38	171.94	575.2	.27	10.18
35	.15	.01	775.5	.63	11.44	3.24	33.33	595.7	.40	13.48
36	.10	.00	517.1	.50	17.15	.66	2.05	634.7	1.07	13.87
37	.12	0.00	440.8	.41	20.12	.08	.03	431.9	1.83	20.54
38	.05	.00	418.5	1.27	21.20	.05	.00	298.6	3.16	29.71
39	.05	0.00	471.3	3.59	18.83	.04	0.00	357.3	3.60	24.83

EMISSION RESULTS IN GRAMS PER MILE (PER MINUTE FOR IDLE)
FUEL ECONOMY IN MILES PER GALLON (PER MINUTE FOR IDLE)

APPENDIX H

LISTING OF MODAL RESULTS ON INDIVIDUAL VEHICLES

WASHINGTON D.C.

	VEH	YEAR	MAKE	MODL	CID	VEH	YEAR	MAKE	MODL	CID
	6024	1976	CHEV	MON7	140	6025	1976	CHEV	MALI	305
MODE NO.	HC	CO	CO2	NOXC	FUEL ECONOMY	HC	CO	CO2	NOXC	FUEL ECONOMY
1	2.31	71.77	358.0	1.42	18.56	.25	4.41	624.2	9.35	14.04
2	.09	2.67	428.9	.87	20.48	.03	2.40	478.1	.79	18.41
3	4.13	181.46	358.0	.13	13.52	.13	4.18	805.8	5.52	10.92
4	.08	5.13	300.0	.49	28.79	.13	2.52	459.0	5.82	19.15
5	.05	1.81	318.5	2.31	27.61	.14	.76	459.5	6.56	19.25
6	.04	1.67	263.8	1.09	33.30	.07	1.70	305.3	.38	28.80
7	.56	28.86	342.6	1.78	22.78	1.43	51.32	549.7	7.47	13.98
8	.07	1.87	304.7	3.60	28.83	.19	16.78	356.2	.76	23.16
9	.06	2.83	307.4	2.27	28.45	.16	2.57	505.0	7.85	17.42
10	.36	4.32	237.0	2.32	36.24	.06	6.49	326.9	.59	26.31
11	2.40	97.49	383.0	1.80	16.32	.30	12.68	676.6	7.67	12.73
12	.26	4.26	293.3	3.10	29.51	.06	6.26	380.5	.57	22.73
13	1.85	96.06	393.5	4.28	16.13	.15	3.27	675.1	8.39	13.04
14	.03	.94	258.4	.43	34.14	.05	6.05	357.2	.74	24.19
15	.11	4.45	378.5	.24	23.00	.00	2.85	378.6	.72	23.17
16	.61	39.82	637.3	.29	12.65	.10	6.15	863.1	.92	10.17
17	1.28	54.99	397.0	3.57	18.21	.13	3.20	652.7	7.72	13.49
18	.03	2.03	276.2	.22	31.76	.03	1.40	425.4	.50	20.75
19	.18	15.45	320.9	2.63	25.67	.10	2.16	476.9	7.74	18.47
20	.09	3.17	312.8	.23	27.91	.03	2.06	447.1	.58	19.71
21	3.47	118.22	341.6	2.31	16.48	.92	34.84	646.7	8.68	12.60
22	.61	5.59	286.1	.40	29.90	.09	14.33	406.9	1.06	20.65
23	1.75	82.09	333.0	5.55	18.98	.09	4.14	650.2	7.26	13.51
24	.16	12.70	334.8	3.61	24.98	.08	1.12	411.2	5.56	21.48
25	.05	1.87	302.7	.71	29.02	.16	19.95	434.0	1.29	19.05
26	.17	5.95	562.9	.56	15.50	.03	1.24	605.6	1.34	14.61
27	.77	42.23	391.9	4.14	19.26	.12	1.86	590.6	5.98	14.94
28	.68	6.67	289.5	.86	29.38	.13	11.43	430.4	.92	19.78
29	1.58	81.36	312.9	4.60	19.91	.05	1.52	514.1	5.50	17.18
30	.40	21.02	300.4	3.13	26.52	.11	1.71	368.0	5.82	23.92
31	.06	2.20	348.8	.82	25.18	.27	25.71	478.8	1.41	17.07
32	.18	10.21	499.6	.48	17.19	.07	3.67	583.5	1.24	15.06
BAG (CALC.)	.89	33.22	341.7	2.27	22.37	.22	10.46	504.1	3.52	17.03
BAG (ACT.)	.97	31.51	341.7	2.30	22.51	.23	10.35	497.3	3.59	17.26
33	.34	11.71	36.6	.02	158.17	.01	0.00	95.0	.23	93.40
34	4.07	129.04	439.8	.23	13.54	.51	0.00	1141.6	1.62	7.76
35	.22	.73	554.1	.45	15.97	.22	.01	613.8	.58	14.44
36	.10	.05	407.7	.53	21.75	.12	0.00	410.2	.46	21.62
37	.06	.00	319.4	.87	27.77	.07	0.00	314.5	1.35	28.20
38	.04	0.00	264.1	1.42	33.59	.07	0.00	361.3	1.37	24.55
39	.03	.01	300.1	4.77	29.56	.06	3.30	409.9	2.19	21.37

EMISSION RESULTS IN GRAMS PER MILE (PER MINUTE FOR IDLE)
FUEL ECONOMY IN MILES PER GALLON (PER MINUTE FOR IDLE)

APPENDIX H

LISTING OF MODAL RESULTS ON INDIVIDUAL VEHICLES

WASHINGTON D.C.

	VEH	YEAR	MAKE	MODL	CID	VEH	YEAR	MAKE	MODL	CID
	6022	1976	CHEV	MONT	350	6023	1976	CHEV	MALI	305
MODE NO.	HC	CO	CO2	NOXC	FUEL ECONOMY	HC	CO	CO2	NOXC	FUEL ECONOMY
1	.31	4.59	975.7	8.36	9.02	.36	3.07	839.7	14.52	10.50
2	.11	.61	542.2	.45	16.33	.07	1.27	385.9	.90	22.87
3	.25	2.41	1176.5	4.58	7.51	.26	6.45	978.1	4.01	8.97
4	.13	.13	714.1	3.73	12.42	.20	1.24	667.2	7.44	13.25
5	.14	.08	650.1	5.65	13.64	.21	.53	546.0	9.00	16.21
6	.09	.25	357.9	.45	24.75	.11	.85	289.9	.67	30.44
7	.39	11.02	739.4	7.47	11.71	1.28	16.24	624.6	11.87	13.57
8	.07	.75	433.4	1.18	20.41	.15	3.40	357.1	1.56	24.46
9	.10	.65	609.8	8.52	14.52	.18	1.27	533.6	11.42	16.55
10	.05	.33	359.6	.71	24.63	.08	.99	295.7	1.24	29.83
11	.29	8.53	843.2	8.96	10.35	.24	1.80	767.2	14.29	11.51
12	.08	1.20	395.8	.88	22.30	.10	1.21	326.1	1.04	27.03
13	.12	2.30	850.3	9.64	10.39	.18	1.63	755.2	14.42	11.70
14	.03	.62	390.6	1.09	22.66	.05	.75	335.9	1.46	26.32
15	.07	.75	499.0	.41	17.74	.10	.85	347.3	.92	25.44
16	.15	2.06	970.1	.96	9.11	.21	3.00	900.3	.55	9.80
17	.18	1.69	814.9	7.53	10.85	.18	1.52	698.5	12.19	12.65
18	.03	.23	427.4	.54	20.74	.07	.54	348.5	.82	25.39
19	.13	0.00	655.2	6.82	13.54	.19	.96	563.9	10.92	15.68
20	.05	.38	509.4	.65	17.40	.11	1.18	390.6	.69	22.59
21	.80	32.26	841.4	7.46	9.92	1.09	21.69	754.6	12.69	11.20
22	.05	.39	459.5	.97	19.28	.17	5.42	373.2	1.54	23.22
23	.11	.33	737.4	6.19	12.02	.20	1.82	695.0	11.33	12.71
24	.11	.34	550.2	6.57	16.11	.13	.42	529.5	10.21	16.73
25	.05	.34	457.8	1.46	19.36	.07	1.05	418.3	1.63	21.12
26	.10	.59	715.8	.60	12.38	.15	.60	488.8	1.80	18.11
27	.12	.37	723.0	6.72	12.26	.16	1.06	635.2	11.54	13.93
28	.05	.82	472.9	1.29	18.71	.08	1.12	396.9	1.32	22.25
29	.19	1.07	690.9	4.14	12.80	.16	1.53	570.6	8.72	15.48
30	.11	1.00	549.6	6.37	16.09	.23	3.14	520.9	9.60	16.86
31	.07	2.24	503.1	1.37	17.51	.15	7.55	443.6	1.90	19.47
32	.07	1.42	663.1	.58	13.34	.08	1.16	504.6	2.47	17.52
BAG (CALC.)	.13	2.69	595.4	3.69	14.79	.22	3.42	515.4	5.52	17.02
BAG (ACT.)	.14	2.67	592.0	3.78	14.88	.21	3.05	494.8	5.45	17.74
33	.01	0.00	101.1	.23	87.79	.03	.00	76.7	.09	115.51
34	.44	0.00	1237.8	1.49	7.16	.80	.00	943.5	.62	9.38
35	.15	0.00	777.2	.75	11.41	.51	.44	631.4	.53	14.01
36	.08	.00	533.8	.75	16.62	.25	.05	414.5	.49	21.37
37	.10	.00	464.6	.50	19.09	.13	0.00	333.0	1.69	26.62
38	.05	0.00	443.8	1.54	19.99	.09	0.00	360.0	1.69	24.63
39	.04	0.00	500.6	3.94	17.73	.07	.13	444.0	5.08	19.97

EMISSION RESULTS IN GRAMS PER MILE (PER MINUTE FOR IDLE)
FUEL ECONOMY IN MILES PER GALLON (PER MINUTE FOR IDLE)

APPENDIX H

LISTING OF MODAL RESULTS ON INDIVIDUAL VEHICLES

WASHINGTON D.C.

	VEH	YEAR	MAKE	MODL	CID	VEH	YEAR	MAKE	MODL	CID
	6020	1976	BUIC	ELEC	455	6021	1976	CADI	DEVI	500
MODE NO.	HC	CO	CO2	NOXC	FUEL ECONOMY	HC	CO	CO2	NOXC	FUEL ECONOMY
1	4.45	97.84	1320.0	10.27	5.97	.22	5.10	1554.7	4.10	5.68
2	1.76	37.54	456.0	.43	17.05	.11	3.04	554.6	1.62	15.86
3	5.36	141.85	1235.5	1.07	6.02	.38	9.85	1514.4	2.08	5.80
4	3.09	81.28	753.9	2.86	9.96	.20	1.48	910.2	1.94	9.72
5	1.80	25.66	648.1	5.63	12.79	.10	.80	794.0	2.37	11.16
6	1.34	14.93	342.1	.22	24.00	.12	.65	366.1	.46	24.15
7	2.34	89.37	932.8	7.32	8.21	1.23	77.50	1049.4	3.28	7.55
8	.26	2.55	409.2	.82	21.44	.07	.48	441.2	1.05	20.07
9	.56	9.74	696.8	8.36	12.43	.08	.85	727.8	2.57	12.17
10	.67	8.62	353.3	.65	24.05	.31	2.82	389.9	.58	22.45
11	.73	13.52	1007.4	9.32	8.61	.16	3.23	1143.4	4.89	7.72
12	.97	8.03	432.3	.68	19.81	.38	5.07	448.9	.83	19.38
13	.94	19.85	1034.7	9.31	8.30	.09	2.34	1133.1	5.07	7.81
14	.49	5.15	383.2	1.25	22.59	.17	1.55	414.1	.80	21.28
15	.74	18.78	422.6	1.29	19.53	.02	2.19	418.9	2.13	21.01
16	2.79	86.30	991.4	.01	7.81	.61	19.34	1011.9	.31	8.50
17	2.37	49.69	952.1	7.78	8.55	.30	7.43	1118.3	4.08	7.85
18	1.55	27.91	378.8	.27	20.76	.15	3.17	481.1	.19	18.24
19	2.05	40.28	761.1	5.80	10.68	.23	8.41	974.8	2.65	8.98
20	2.14	35.90	456.8	.34	17.07	.28	6.77	503.6	.29	17.23
21	2.71	92.50	1105.9	9.43	7.04	.80	50.53	1284.4	3.93	6.50
22	1.07	13.77	448.8	.82	18.73	.31	3.08	468.5	.87	18.71
23	2.87	63.85	950.6	5.89	8.37	.26	16.33	993.8	2.19	8.70
24	1.37	24.59	1040.8	4.75	8.19	.10	2.99	677.8	3.01	13.00
25	.42	7.50	489.8	1.09	17.65	.13	1.25	529.1	1.02	16.70
26	1.05	22.88	634.0	2.10	13.18	.14	6.39	685.6	1.03	12.75
27	1.23	24.20	824.5	6.15	10.24	.25	6.37	901.6	3.92	9.73
28	.94	12.80	475.9	.92	17.79	.29	3.42	535.8	.94	16.37
29	2.70	64.96	760.5	2.50	10.19	.78	28.71	837.5	1.86	10.03
30	1.58	33.78	625.4	5.10	12.98	.22	8.26	612.3	2.03	14.18
31	.47	12.56	508.7	2.18	16.75	.06	.83	604.7	1.41	14.64
32	1.28	28.27	618.1	1.90	13.31	.12	6.45	682.4	1.15	12.81
BAG (CALC.)	1.22	25.63	661.2	3.65	12.58	.24	8.10	723.8	2.21	12.04
BAG (ACT.)	1.29	25.87	644.0	3.69	12.89	.28	8.34	710.1	2.32	12.26
33	.46	6.09	119.0	.06	68.28	.02	.30	131.0	.04	67.45
34	5.30	58.33	1475.3	.69	5.60	.53	.01	1578.4	2.05	5.62
35	2.76	32.59	738.4	.35	11.12	.37	.00	878.8	1.02	10.09
36	1.43	19.07	621.6	.39	13.53	.20	0.00	586.0	.93	15.13
37	.15	.10	418.3	1.51	21.19	.10	0.00	456.1	.98	19.45
38	.10	0.00	483.3	.95	18.35	.06	0.00	513.9	.80	17.26
39	.07	.02	543.0	3.95	16.34	.04	0.00	557.5	1.55	15.92

EMISSION RESULTS IN GRAMS PER MILE (PER MINUTE FOR IDLE)
FUEL ECONOMY IN MILES PER GALLON (PER MINUTE FOR IDLE)

APPENDIX H

LISTING OF MODAL RESULTS ON INDIVIDUAL VEHICLES

WASHINGTON D.C.

	VEH	YEAR	MAKE	MODL	CID	VEH	YEAR	MAKE	MODL	CID
	6018	1976	AMC	PACE	258	6019	1976	BUIC	REGA	350
MODE NO.	HC	CO	CO2	NOXC	FUEL ECONOMY	HC	CO	CO2	NOXC	FUEL ECONOMY
1	.80	11.29	618.3	3.64	13.90	.75	19.88	1212.0	6.63	7.13
2	.56	3.00	382.8	1.71	22.80	.05	2.56	417.2	.40	21.06
3	.72	11.51	655.2	.85	13.14	1.68	90.62	1210.5	1.19	6.53
4	.53	4.33	434.6	2.61	20.03	.78	15.65	731.3	3.50	11.70
5	.39	3.08	381.2	2.06	22.92	.20	4.57	656.8	3.82	13.35
6	.19	2.48	308.5	1.64	28.35	.03	.42	275.7	.21	32.10
7	1.04	61.86	569.9	3.25	13.24	.64	30.90	881.1	6.25	9.53
8	.13	1.74	409.4	2.21	21.51	.04	.21	254.7	1.54	34.79
9	.28	5.47	490.1	2.44	17.76	.08	1.67	709.5	6.25	12.46
10	1.38	1.55	304.6	1.44	28.51	.06	.64	268.1	.90	32.96
11	.81	34.20	726.9	3.68	11.33	.24	10.28	934.6	9.10	9.33
12	1.45	1.89	360.5	2.14	24.12	.02	1.09	293.3	1.23	30.08
13	.79	12.53	697.0	3.73	12.34	.17	4.69	938.9	8.44	9.37
14	.42	1.47	342.8	2.22	25.62	.02	.17	274.9	1.38	32.25
15	.44	0.00	373.9	2.08	23.65	.08	3.87	290.5	.81	29.90
16	.74	0.00	761.2	1.69	11.62	.51	22.73	615.3	.35	13.60
17	.60	8.14	617.5	4.15	14.04	.48	12.55	958.5	7.05	9.06
18	.64	4.09	323.8	2.10	26.71	.27	3.83	236.6	.34	36.45
19	.50	8.02	443.7	3.15	19.38	.39	7.83	887.8	6.34	9.85
20	1.39	4.48	428.9	2.39	20.15	.35	4.21	323.0	.44	26.83
21	1.35	91.19	632.5	3.84	11.38	.41	17.01	1038.0	8.23	8.33
22	1.97	5.11	373.5	2.33	22.89	.06	.92	316.4	1.07	27.90
23	.75	7.65	502.5	2.54	17.17	.94	25.11	876.7	4.49	9.66
24	.44	6.62	472.1	2.99	18.34	.31	5.41	654.2	5.48	13.37
25	.10	3.77	422.1	3.04	20.72	.06	.84	333.0	1.74	26.53
26	.70	15.06	598.9	3.36	14.21	.34	9.90	449.4	1.09	19.04
27	.67	17.79	597.0	3.63	14.15	.32	8.39	786.4	6.90	11.09
28	1.55	3.30	403.7	2.30	21.45	.29	4.48	340.0	1.27	25.51
29	.77	4.62	398.7	2.60	21.73	1.58	44.99	791.6	3.34	10.23
30	.58	17.28	465.5	2.75	17.95	.45	8.35	626.9	5.16	13.84
31	.13	1.61	461.9	3.83	19.10	.10	1.16	337.4	1.50	26.14
32	.73	7.54	451.8	3.41	19.05	.97	22.11	396.6	.74	20.43
BAG (CALC.)	.88	12.86	490.8	2.92	17.28	.24	6.22	545.5	3.62	15.96
BAG (ACT.)	.96	12.67	483.9	2.88	17.51	.22	6.91	542.1	3.62	16.03
33	.15	.24	66.6	.10	131.61	.01	0.00	91.4	.09	97.07
34	1.80	3.04	799.2	.92	10.96	.30	.01	1098.1	.80	8.08
35	.87	3.10	615.0	1.26	14.25	.08	.00	819.1	.66	10.83
36	.70	1.83	402.6	1.06	21.77	.08	.00	531.8	.44	16.68
37	.46	1.35	315.7	1.52	27.80	.05	.00	342.1	1.10	25.93
38	.23	1.48	354.4	1.64	24.83	.04	0.00	385.0	.97	23.04
39	.10	1.53	415.6	2.34	21.22	.03	0.00	420.4	3.16	21.11

EMISSION RESULTS IN GRAMS PER MILE (PER MINUTE FOR IDLE)
FUEL ECONOMY IN MILES PER GALLON (PER MINUTE FOR IDLE)

APPENDIX H

LISTING OF MODAL RESULTS ON INDIVIDUAL VEHICLES

WASHINGTON D.C.

	VEH	YEAR	MAKE	MODL	CID	VEH	YEAR	MAKE	MODL	CID
	7009	1976	FORD	F100	360	7010	1976	DATS	620	119
MODE NO.	HC	CO	CO2	NOXC	FUEL ECONOMY	HC	CO	CO2	NOXC	FUEL ECONOMY
1	1.39	12.29	1152.1	5.13	7.55	2.37	37.04	474.0	7.68	16.44
2	.38	8.52	675.2	1.04	12.87	.46	6.29	376.5	1.06	22.89
3	1.05	23.66	1081.2	2.05	7.91	2.66	53.66	568.0	5.96	13.43
4	.66	10.74	699.8	1.60	12.35	1.31	11.94	415.5	5.10	20.25
5	.74	6.34	630.9	2.83	13.80	1.17	8.78	351.5	5.64	24.06
6	.55	5.59	469.3	.94	18.50	.33	3.67	228.0	.95	37.80
7	.72	14.85	722.3	6.62	11.87	1.88	33.54	388.7	6.75	19.84
8	.90	3.89	494.7	2.18	17.62	.50	4.78	261.6	2.24	32.79
9	.66	4.49	612.4	4.67	14.28	1.07	7.38	306.3	6.76	27.63
10	.90	3.21	430.5	1.43	20.24	.40	4.98	240.1	1.55	35.62
11	.84	9.79	856.2	10.07	10.15	1.53	23.29	444.2	8.13	18.28
12	1.84	4.18	524.4	1.74	16.53	.46	6.97	276.7	1.76	30.70
13	.92	6.83	841.9	8.63	10.37	1.53	20.41	434.8	8.68	18.82
14	1.11	3.80	470.7	1.73	18.48	.40	4.68	258.1	1.95	33.28
15	.35	6.78	589.1	1.15	14.77	.39	6.18	379.4	1.33	22.74
16	1.04	15.74	1402.2	1.04	6.21	.57	29.27	806.3	.42	10.39
17	1.03	8.26	801.8	5.87	10.85	1.59	23.44	396.5	7.64	20.25
18	.49	5.94	530.0	1.00	16.41	.38	5.10	276.9	.98	31.02
19	.74	5.33	651.1	2.57	13.41	1.31	14.46	369.7	6.59	22.38
20	.61	7.73	667.3	1.17	13.03	.38	6.97	332.5	.98	25.75
21	.71	15.52	830.0	8.05	10.36	2.21	60.50	412.3	7.48	17.25
22	1.50	4.07	537.2	1.84	16.19	.44	6.54	289.8	1.85	29.44
23	.93	13.20	790.7	2.22	10.90	1.97	27.85	374.3	7.53	20.92
24	.61	5.11	644.9	4.33	13.55	1.00	7.87	311.0	7.14	27.18
25	.74	4.03	500.6	2.03	17.43	.44	5.42	306.8	1.82	28.03
26	.55	12.40	811.0	1.38	10.67	.64	15.02	542.6	1.45	15.62
27	.88	5.75	733.4	6.61	11.91	1.27	16.02	369.6	8.08	22.26
28	1.12	4.66	513.6	1.64	16.92	.45	6.62	303.2	1.59	28.17
29	.86	13.13	693.0	2.42	12.39	1.64	29.06	360.8	5.84	21.56
30	.64	6.54	622.6	4.67	13.98	1.07	9.20	302.2	7.83	27.73
31	.73	4.53	551.1	2.43	15.83	.49	8.01	335.3	1.96	25.40
32	.41	9.41	735.2	1.20	11.81	.53	9.53	459.4	1.14	18.64
BAG (CALC.)	.81	6.75	642.7	4.15	13.53	.88	12.57	351.6	4.48	23.72
BAG (ACT.)	.89	6.51	646.1	4.26	13.47	.95	12.37	344.7	4.57	24.17
33	.20	1.89	150.2	.21	57.70	.13	5.63	47.9	.02	155.43
34	2.26	18.68	1825.7	2.04	4.77	2.10	72.80	642.3	.45	11.63
35	1.02	7.73	888.5	.91	9.82	1.08	9.98	605.4	1.88	14.21
36	.70	5.59	616.2	.68	14.15	.96	7.72	410.5	1.70	20.85
37	.34	5.86	486.5	1.01	17.87	.69	3.65	305.2	2.48	28.35
38	.46	4.71	501.3	1.00	17.40	.77	4.49	261.7	2.36	32.73
39	.31	3.35	530.2	2.54	16.54	.73	5.70	295.2	5.54	28.96

EMISSION RESULTS IN GRAMS PER MILE (PER MINUTE FOR IDLE)
FUEL ECONOMY IN MILES PER GALLON (PER MINUTE FOR IDLE)

APPENDIX H

LISTING OF MODAL RESULTS ON INDIVIDUAL VEHICLES

WASHINGTON D.C.

	VEH	YEAR	MAKE	MODL	CID	VEH	YEAR	MAKE	MODL	CID
	7007	1976	FORD	E100	300	7008	1976	FORD	E100	351
MODE NO.	HC	CO	CO2	NOXC	FUEL ECONOMY	HC	CO	CO2	NOXC	FUEL ECONOMY
1	.37	1.34	1010.8	7.54	8.75	3.26	21.15	1008.7	9.05	8.43
2	.03	1.36	454.5	1.42	19.43	1.87	7.88	505.4	.88	16.95
3	.26	1.78	1167.8	5.22	7.58	3.29	51.39	1019.9	1.50	7.99
4	.21	1.21	701.6	4.09	12.60	1.94	6.57	700.7	3.13	12.37
5	.24	.99	649.3	4.15	13.62	1.52	4.56	640.9	5.42	13.59
6	.05	.94	301.8	.44	29.25	3.08	1.97	362.2	1.10	23.67
7	.63	6.35	834.7	5.38	10.48	2.14	5.34	609.0	12.90	14.22
8	.07	.85	332.3	.90	26.58	2.66	3.17	444.5	3.79	19.38
9	.20	1.56	697.1	5.29	12.68	1.44	3.59	676.1	8.87	12.93
10	.04	1.17	304.1	.75	29.00	5.50	3.22	338.2	2.29	24.61
11	.26	3.19	917.5	7.93	9.61	1.98	7.03	818.1	13.66	10.62
12	.05	2.11	332.7	1.10	26.40	6.36	4.70	404.0	3.23	20.57
13	.21	2.82	905.6	7.27	9.75	2.17	5.93	751.5	12.74	11.56
14	.05	1.34	320.9	1.03	27.46	4.22	3.27	396.0	3.27	21.41
15	.04	2.89	361.9	.63	24.21	1.38	2.31	540.8	.88	16.17
16	.06	11.69	840.8	4.33	10.33	2.86	26.33	906.9	.87	9.27
17	.30	2.71	861.6	6.53	10.24	2.77	69.38	759.8	5.72	10.11
18	.05	1.93	337.3	.65	26.07	3.94	2.17	410.8	1.48	20.80
19	.31	2.56	736.3	7.69	11.97	1.88	10.68	611.0	5.06	14.00
20	.04	2.48	409.0	.96	21.49	4.78	2.54	488.5	1.51	17.48
21	.46	52.90	997.6	5.59	8.20	2.39	13.87	902.7	13.40	9.52
22	.05	1.62	366.2	.96	24.06	5.53	2.62	450.5	3.53	18.80
23	.26	3.18	850.3	6.99	10.37	2.35	16.61	721.0	3.06	11.76
24	.22	1.80	602.9	5.33	14.64	1.42	3.38	585.3	6.65	14.91
25	.05	.94	369.4	.86	23.92	2.21	3.06	479.6	4.20	18.06
26	.08	2.92	567.5	1.62	15.51	2.00	4.43	812.0	1.48	10.75
27	.23	2.08	731.5	6.52	12.07	1.71	5.04	677.5	9.71	12.85
28	.05	1.68	410.2	.90	21.49	5.13	3.39	437.0	3.30	19.35
29	.23	2.76	758.1	5.59	11.63	1.94	10.72	694.0	1.91	12.38
30	.25	2.52	682.9	6.34	12.91	1.44	3.63	626.1	6.96	13.95
31	.04	1.22	401.4	.39	22.00	1.51	3.08	500.6	4.91	17.39
32	.03	3.51	483.3	2.20	18.15	2.16	3.48	632.0	1.17	13.77
BAG (CALC.)	.14	5.12	563.2	3.26	15.53	2.68	7.04	585.7	6.37	14.66
BAG (ACT.)	.15	4.10	576.9	3.30	15.20	2.76	7.67	582.3	6.61	14.72
33	.02	.00	121.0	.52	73.31	.44	4.90	97.1	.08	83.61
34	.24	.01	1453.9	4.52	6.10	6.05	43.31	1166.8	.92	7.08
35	.12	.00	735.8	2.24	12.06	3.27	7.59	718.2	.68	11.99
36	.10	0.00	499.1	1.42	17.77	1.52	3.13	692.0	.92	12.65
37	.23	.07	386.6	.57	22.91	1.07	2.41	475.4	1.02	18.39
38	.13	.09	424.5	.93	20.88	.90	2.12	458.6	1.86	19.10
39	.07	.12	488.5	3.19	18.15	.76	3.19	495.5	5.24	17.65

EMISSION RESULTS IN GRAMS PER MILE (PER MINUTE FOR IDLE)
FUEL ECONOMY IN MILES PER GALLON (PER MINUTE FOR IDLE)

APPENDIX H

LISTING OF MODAL RESULTS ON INDIVIDUAL VEHICLES

WASHINGTON D.C.

	VEH	YEAR	MAKE	MODL	CID	VEH	YEAR	MAKE	MODL	CID
	7005	1976	DODG	B100	318	7006	1976	DODG	B100	225
MODE NO.	HC	CO	CO2	NOXC	FUEL ECONOMY	HC	CO	CO2	NOXC	FUEL ECONOMY
1	.42	8.00	1054.5	3.79	8.31	1.49	36.24	945.5	3.68	8.81
2	.05	1.74	526.7	.99	16.76	.13	2.13	371.2	1.47	23.67
3	.11	4.56	1286.0	2.61	6.86	.13	4.74	962.8	4.07	9.14
4	.16	3.70	756.2	3.68	11.64	.49	5.67	645.6	2.77	13.53
5	.09	.81	614.6	5.32	14.40	.41	8.20	611.5	2.70	14.19
6	.08	1.18	356.7	1.12	24.73	.09	1.32	313.3	.75	28.12
7	.34	4.99	853.9	4.81	10.29	1.92	123.00	685.9	5.52	10.03
8	.08	.55	374.3	1.01	23.64	.14	8.08	369.5	.87	23.19
9	.10	2.30	657.7	3.90	13.42	.50	33.04	623.9	2.02	13.10
10	.05	1.56	338.7	.82	26.00	.13	6.76	397.0	.62	21.75
11	1.36	70.64	801.4	3.20	9.68	1.68	110.35	691.8	3.12	10.20
12	.07	1.07	391.1	.94	22.58	.17	13.59	315.1	.99	26.33
13	.24	7.14	853.6	4.24	10.25	1.07	71.54	716.6	3.07	10.66
14	.06	.46	348.0	1.06	25.44	.20	12.69	352.1	1.26	23.81
15	.01	.28	389.0	1.07	22.79	.02	1.47	321.6	3.26	27.40
16	.07	2.88	908.3	.91	9.72	0.00	1.96	603.5	1.59	14.63
17	.28	11.45	836.0	.70	10.38	1.31	44.34	696.8	2.99	11.52
18	.03	1.73	386.0	1.05	22.83	.13	3.08	358.5	.56	24.40
19	.30	10.12	668.0	2.74	12.96	1.75	78.48	544.0	1.94	13.19
20	.07	1.73	433.9	1.00	20.32	.16	6.20	375.7	.46	23.00
21	1.76	81.84	824.0	3.27	9.26	1.88	125.98	696.1	4.52	9.86
22	.07	.77	420.9	.94	21.01	.23	15.10	382.4	1.35	21.82
23	.10	3.80	857.5	3.20	10.28	.74	23.08	706.2	2.30	11.92
24	.06	1.09	525.6	3.97	16.83	.41	19.07	520.5	2.12	16.08
25	.04	.45	480.3	1.45	18.45	.24	14.91	368.7	1.71	22.59
26	0.00	.41	677.8	1.40	13.08	.01	1.00	408.6	4.80	21.64
27	.11	3.35	696.5	3.32	12.64	.95	51.92	630.7	2.27	12.41
28	.05	1.15	481.4	1.29	18.36	.26	13.92	375.6	1.56	22.29
29	.02	1.27	682.2	2.39	12.97	.72	15.33	601.4	2.50	14.14
30	.20	4.48	532.4	2.83	16.43	1.35	57.46	494.0	2.89	15.08
31	.04	.72	521.0	1.39	17.00	.26	24.90	452.3	1.82	18.03
32	.04	2.12	619.1	1.44	14.26	.01	2.04	412.4	3.35	21.35
BAG (CALC.)	.16	6.57	586.6	2.22	14.85	.54	31.19	497.0	2.31	16.20
BAG (ACT.)	.18	6.46	579.8	2.19	15.03	.57	32.35	490.2	2.24	16.35
33	.02	.00	125.5	.15	70.67	.01	.00	80.1	.10	110.80
34	.24	.01	1461.4	1.65	6.07	.23	.00	940.4	.73	9.43
35	.16	.00	753.1	.71	11.78	.15	.00	617.2	1.09	14.37
36	.08	.00	547.9	.55	16.19	.08	.00	404.0	.88	21.96
37	.13	.07	380.3	1.95	23.31	.06	.00	343.3	3.80	25.84
38	.06	.03	431.0	1.85	20.58	.07	1.35	412.0	.95	21.42
39	.05	.04	496.9	2.23	17.85	.42	22.03	474.2	2.99	17.40

EMISSION RESULTS IN GRAMS PER MILE (PER MINUTE FOR IDLE)
FUEL ECONOMY IN MILES PER GALLON (PER MINUTE FOR IDLE)

APPENDIX H

LISTING OF MODAL RESULTS ON INDIVIDUAL VEHICLES

WASHINGTON D.C.

	VEH	YEAR	MAKE	MODL	CID	VEH	YEAR	MAKE	MODL	CID
	7003	1976	CHEV	G10	350	7004	1976	CHEV	G10	350
MODE NO.	HC	CO	CO2	NOXC	FUEL ECONOMY	HC	CO	CO2	NOXC	FUEL ECONOMY
1	.95	11.01	1203.1	8.33	7.25	1.58	48.44	1050.9	6.78	7.84
2	0.00	.05	407.3	.53	21.79	1.12	19.60	334.1	.26	24.09
3	.50	15.15	1238.8	2.45	7.02	4.20	120.25	1231.9	1.90	6.19
4	.21	5.75	740.6	3.74	11.83	.83	18.51	709.3	3.72	11.98
5	.13	2.56	628.0	5.05	14.03	.08	.58	621.5	4.93	14.25
6	.03	0.00	312.4	.44	28.40	.18	1.10	292.7	.45	30.08
7	.20	2.53	896.8	9.83	9.85	.16	1.24	828.5	8.53	10.68
8	.01	.03	327.5	1.55	27.09	.04	.42	353.1	1.19	25.08
9	.03	0.00	674.2	7.16	13.16	.06	.63	620.7	6.95	14.27
10	.02	.02	330.5	1.01	26.85	1.12	6.03	301.0	.69	28.27
11	.09	1.46	860.0	8.94	10.29	.27	7.60	834.7	8.85	10.47
12	.03	.05	324.6	1.28	27.33	1.41	6.01	346.1	.89	24.66
13	.08	1.37	834.9	15.73	10.60	.35	8.33	817.0	8.38	10.68
14	.01	0.00	345.3	1.63	25.70	.73	1.36	341.9	1.01	25.63
15	0.00	0.00	390.9	.62	22.70	.22	2.65	319.0	.83	27.41
16	0.00	0.00	886.9	.99	10.01	3.03	78.78	642.9	0.00	11.43
17	.13	3.02	805.9	6.80	10.94	.67	16.79	817.2	6.90	10.49
18	.03	0.00	343.3	.67	25.85	1.09	1.36	319.3	.41	27.32
19	.11	1.95	633.2	5.03	13.94	.44	9.01	739.9	5.27	11.75
20	.04	0.00	416.8	.81	21.29	1.51	9.82	377.2	.43	22.33
21	.21	3.70	917.9	9.64	9.60	.51	12.20	921.7	8.93	9.42
22	.03	0.00	380.9	1.57	23.29	1.34	7.57	335.6	.82	25.23
23	.18	6.29	870.1	4.25	10.08	1.54	38.75	719.7	4.49	11.30
24	.07	1.42	596.8	4.90	14.81	.07	1.25	561.4	6.14	15.75
25	.01	.05	443.2	2.39	20.02	.22	1.27	377.6	1.20	23.34
26	.01	.10	651.4	1.45	13.62	.43	5.05	590.1	.60	14.81
27	.07	1.27	688.2	6.41	12.85	.39	10.17	706.1	7.12	12.27
28	.02	.05	424.3	1.86	20.91	1.38	8.25	372.4	1.11	22.77
29	.15	4.70	689.8	2.68	12.72	1.46	50.46	654.4	3.64	12.02
30	.04	.05	599.4	5.16	14.80	.09	1.67	635.0	6.89	13.91
31	.01	.05	485.4	2.68	18.28	.12	.84	380.2	1.45	23.24
32	0.00	.14	524.7	1.48	16.91	.92	16.34	457.6	.72	18.25
BAG (CALC.)	.05	.76	565.2	4.27	15.67	.69	9.59	537.0	3.63	16.01
BAG (ACT.)	.06	.80	568.6	4.04	15.57	.74	9.39	540.4	3.66	15.92
33	.01	0.00	100.5	.15	88.32	.53	12.69	72.0	.04	94.75
34	.38	0.00	1207.3	1.11	7.34	7.39	152.86	867.9	.22	7.84
35	.30	.44	807.4	.66	10.97	4.10	88.63	442.7	.11	14.92
36	.24	.29	523.2	.52	16.92	2.22	46.36	440.3	.29	17.06
37	.16	.34	451.1	.40	19.63	.09	.37	385.8	1.01	22.95
38	.04	0.00	432.5	1.23	20.52	.05	0.00	431.0	1.07	20.59
39	.02	0.00	499.8	2.87	17.75	.04	0.00	466.6	2.86	19.02

EMISSION RESULTS IN GRAMS PER MILE (PER MINUTE FOR IDLE)
FUEL ECONOMY IN MILES PER GALLON (PER MINUTE FOR IDLE)

APPENDIX H

LISTING OF MODAL RESULTS ON INDIVIDUAL VEHICLES

WASHINGTON D.C.

	VEH	YEAR	MAKE	MODL	CID	VEH	YEAR	MAKE	MODL	CID
	7001	1976	CHEV	G10	350	7002	1976	CHEV	G10	350
MODE NO.	HC	CO	CO2	NOXC	FUEL ECONOMY	HC	CO	CO2	NOXC	FUEL ECONOMY
1	.51	13.62	983.8	4.63	8.82	.27	12.30	993.5	3.58	8.76
2	.09	.65	505.5	.36	17.51	.03	.44	558.5	.35	15.87
3	.96	19.14	944.6	1.83	9.08	.45	8.70	1029.6	1.56	8.50
4	.29	8.50	701.0	2.61	12.41	.15	5.13	723.5	.92	12.12
5	.09	.29	665.2	3.54	13.33	.07	.01	651.3	2.69	13.62
6	.09	.28	395.2	.59	22.42	.03	.23	367.2	.77	24.14
7	.84	25.03	823.1	6.04	10.26	.41	15.15	788.4	5.37	10.91
8	.05	.20	413.7	1.44	21.43	.04	0.00	416.9	2.12	21.28
9	.05	.23	715.3	5.43	12.40	.03	0.00	616.0	5.08	14.41
10	.03	.21	374.9	.76	23.65	.08	.22	362.6	1.22	24.44
11	.21	4.55	899.6	7.16	9.78	.14	3.27	818.5	8.48	10.77
12	.05	.38	424.3	.87	20.88	.03	.20	399.5	1.70	22.19
13	.11	2.21	846.4	6.76	10.44	.12	3.59	819.6	7.76	10.75
14	.04	.05	415.6	1.38	21.35	.11	.82	424.1	1.93	20.85
15	.07	0.00	511.4	.26	17.35	.08	2.53	519.8	.25	16.94
16	.06	0.00	863.3	.76	10.28	0.00	1.96	1035.8	.60	8.54
17	.18	4.31	834.8	5.53	10.54	.16	4.64	765.4	5.60	11.48
18	.05	.30	421.8	.64	21.01	.07	.49	442.3	.90	20.02
19	.17	4.86	685.7	4.32	12.79	.14	4.68	609.4	2.39	14.38
20	.08	0.00	516.3	.67	17.18	.05	1.35	514.8	1.09	17.17
21	.63	23.09	891.1	6.81	9.55	.24	7.74	843.9	7.39	10.36
22	.06	.32	491.0	1.15	18.05	.10	.94	492.9	2.05	17.94
23	.35	10.20	772.7	3.86	11.24	.37	15.11	770.5	2.66	11.16
24	.05	.70	615.7	4.18	14.38	.13	1.73	551.1	3.60	16.02
25	.04	.27	487.0	1.75	18.21	.04	.15	524.0	2.96	16.93
26	.19	1.76	783.8	.45	11.28	.06	.51	781.5	.37	11.34
27	.12	2.51	740.6	5.40	11.91	.09	1.53	669.7	5.73	13.20
28	.07	.28	507.7	1.50	17.46	.06	.16	513.0	2.29	17.29
29	.31	6.47	649.2	2.66	13.44	.15	3.43	634.5	1.33	13.86
30	.11	.89	651.8	4.55	13.58	.10	2.29	514.8	2.53	17.11
31	.05	.25	552.1	2.10	16.06	.03	.27	572.4	3.38	15.49
32	.18	1.50	604.4	1.08	14.61	.29	8.84	720.5	.29	12.07
BAG (CALC.)	.13	2.63	623.3	3.07	14.14	.09	1.93	601.2	3.76	14.68
BAG (ACT.)	.14	2.74	626.7	3.03	14.05	.10	2.06	594.4	3.97	14.84
33	.01	.00	100.8	.16	88.04	.01	.00	113.7	.21	78.06
34	.95	.44	1233.3	.96	7.17	.31	.01	1363.9	1.37	6.50
35	1.29	2.24	603.0	.36	14.54	.15	.00	703.8	.57	12.60
36	.56	1.11	561.9	.48	15.70	.10	.00	552.4	.46	16.06
37	.14	.10	500.4	.40	17.72	.07	0.00	469.4	.37	18.90
38	.05	0.00	483.5	1.19	18.35	.02	0.00	457.4	1.10	19.40
39	.03	0.00	559.5	2.46	15.86	.02	0.00	513.2	3.03	17.29

EMISSION RESULTS IN GRAMS PER MILE (PER MINUTE FOR IDLE)
FUEL ECONOMY IN MILES PER GALLON (PER MINUTE FOR IDLE)

Appendix I

LISTING OF FEDERAL SHORT-CYCLE EMISSION RESULTS ON INDIVIDUAL VEHICLES

APPENDIX I

LISTING OF FEDERAL SHORT CYCLE EMISSIONS
RESULTS ON INDIVIDUAL VEHICLES

ST. LOUIS

VEHICLE NUMBER	YEAR	MAKE	MODEL	CID	HC	CO	CO2	NOXC	FUEL ECONOMY
7002	1976	CHEV	C10	350	2.07	41.10	536.1	1.13	14.62
7003	1976	CHEV	C10	350	.43	2.96	561.2	1.11	15.65
7005	1976	DODG	B100	318	.64	5.49	528.2	3.09	16.47
7007	1976	FORD	CLUB	302	2.26	19.97	423.6	2.51	19.21
7008	1976	FORD	F150	360	1.30	7.50	256.7	.95	32.56
7010	1976	TOYO	TRUC	140	.45	7.06	446.0	1.44	19.36
7011	1975	CHEV	C10	350	1.10	17.46	642.8	1.23	13.17
7012	1975	CHEV	TRUC	350	2.35	60.99	483.4	1.18	15.13
7013	1975	CHEV	G10V	350	.45	.10	567.5	.93	15.60
7014	1975	DODG	C100	318	.80	2.18	512.0	2.08	17.14
7015	1975	FORD	F100	302	.56	.51	552.9	1.83	15.98
7016	1975	FORD	F100	300	.54	3.09	448.3	1.53	19.51
7017	1975	FORD	F100	360	.97	23.89	624.0	.95	13.36
6018	1976	AMC	HORN	258	.82	3.51	400.5	3.93	21.72
6019	1976	BUIC	STAW	350	1.01	19.86	532.6	1.67	15.65
6020	1976	BUIC	SKYL	231	.64	9.62	547.3	1.67	15.73
6021	1976	CADI	ELDO	500	4.39	109.20	526.9	.88	12.46
6022	1976	CHEV	IMPA	350	.34	2.44	596.6	1.27	14.75
6023	1976	CHEV	MONT	350	.55	9.36	563.6	.80	15.30
6024	1976	CHEV	VEGA	140	2.13	44.81	286.1	.71	24.43
6025	1976	CHEV	STAW	400	.41	1.82	631.2	1.76	13.97
6026	1976	CHEV	ELCA	305	.26	.44	460.8	1.62	19.20
6027	1976	CHEV	NOVA	250	1.16	13.86	411.6	1.71	20.31
6029	1976	DODG	STAW	318	3.24	18.40	426.9	4.38	19.04
6030	1976	DODG	ASPE	225	2.40	13.40	341.7	1.46	23.96
6031	1976	FORD	MUST	140	.29	.80	359.1	1.10	24.57
6032	1976	FORD	STAW	400	1.86	24.73	574.6	1.12	14.33
6033	1976	FORD	STAW	351	.63	.03	521.0	1.58	16.97
6034	1976	FORD	GRAN	250	1.60	7.96	461.1	.65	18.54
6035	1976	FORD	GRAN	302	1.30	13.94	462.7	1.34	18.16
6036	1976	FORD	TORI	351	1.05	2.88	510.7	1.27	17.12
6037	1976	MERC	COME	250	1.72	5.34	457.4	.58	18.83
6038	1976	MERC	MONA	200	.96	3.64	398.4	1.08	21.80
6039	1976	OLDS	CUTL	260	.40	.48	495.1	2.09	17.85
6040	1976	OLDS	CUTL	350	3.86	32.31	430.5	1.13	17.98
6041	1976	OLDS	DELT	455	4.38	35.36	519.0	.76	15.08
6042	1976	PLYM	DUST	225	3.01	39.50	286.3	1.14	24.80
6043	1976	PLYM	VOLA	318	5.37	4.91	445.5	1.03	18.87
6044	1976	PONT	LEMA	350	.20	0.00	450.0	2.30	19.69
6045	1976	PONT	GRNP	400	2.67	10.84	518.9	1.59	16.30
6046	1976	DATS	B210	85	.96	6.49	279.6	1.09	30.31
6047	1976	DATS	B210	85	1.25	3.87	261.1	1.50	32.73
6048	1976	TOYO	CORO	97	1.13	9.20	285.2	2.49	29.27
6049	1976	TOYO	CELI	133	.37	14.54	419.9	1.70	19.99
6050	1976	VOLK	SEDA	97	3.02	75.19	217.0	.33	25.75
6051	1976	VOLK	RABB	97	1.09	9.90	281.9	2.06	29.50
6201	1976	AMC	STAW	304	.39	3.78	506.8	1.52	17.27
6202	1976	AMC	HORN	258	1.02	2.32	413.7	2.62	21.10
6203	1976	AMC	MATA	304	.38	.79	462.9	1.32	19.07
6204	1976	AMC	HORN	232	1.50	23.64	369.4	3.05	21.58

EMISSION RESULTS IN GRAMS PER MILE
FUEL ECONOMY IN MILES PER GALLON

APPENDIX I

LISTING OF FEDERAL SHORT CYCLE EMISSIONS
RESULTS ON INDIVIDUAL VEHICLES

ST. LOUIS

VEHICLE NUMBER	YEAR	MAKE	MODEL	CID	HC	CO	CO2	NOXC	FUEL ECONOMY
6205	1976	BUIC	CNTY	231	1.77	33.04	376.6	5.63	20.44
6206	1976	BUIC	LASA	350	.69	4.05	563.9	1.67	15.50
6207	1976	BUIC	REGA	350	.18	0.00	548.6	1.47	16.16
6208	1976	BUIC	STAW	350	.50	1.79	580.7	1.66	15.17
6209	1976	BUIC	LESA	350	.43	7.27	550.0	.87	15.77
6210	1976	BUIC	SKYH	231	1.69	24.51	352.6	.70	22.39
6211	1976	BUIC	SKYL	231	.23	2.15	380.8	.91	23.06
6212	1976	CADI	SEVI	350	.69	.92	489.5	1.92	18.00
6213	1976	CADI	FLEE	500	1.64	14.36	628.2	.94	13.53
6215	1976	CADI	DEVI	500	.43	.20	668.8	.91	13.24
6216	1976	CHEV	CHET	97	1.92	20.72	289.9	2.39	27.01
6217	1976	CHEV	CAPR	350	2.50	91.83	484.3	2.35	13.94
6218	1976	CHEV	MONT	350	.22	0.00	560.7	1.16	15.81
6219	1976	CHEV	STAW	350	1.62	29.52	547.7	1.29	14.81
6220	1976	CHEV	CAMA	250	.41	.21	406.5	1.86	21.75
6221	1976	CHEV	STAW	350	.26	3.98	543.2	1.42	16.13
6222	1976	CHEV	CAMA	305	2.05	24.97	441.0	3.42	18.24
6223	1976	CHEV	CAPR	454	.33	.10	614.6	.89	14.41
6224	1976	CHEV	MONT	350	2.36	49.74	492.4	.76	15.35
6225	1976	CHEV	IMPA	350	1.33	16.10	526.9	1.16	15.95
6226	1976	CHEV	CAMA	305	.32	3.52	497.3	1.14	17.62
6227	1976	CHEV	MONT	350	.39	7.49	494.0	2.99	17.51
6228	1976	CHEV	VEGA	140	.70	11.28	352.6	.68	23.82
6229	1976	CHEV	MONZ	140	.63	6.78	398.4	1.20	21.59
6230	1976	CHEV	MONT	350	.21	.81	546.1	.98	16.19
6231	1976	CHEV	CAMA	350	2.75	56.63	451.0	.87	16.17
6232	1976	CHEV	CAMA	305	.37	1.17	459.8	1.28	19.18
6233	1976	CHEV	MALI	350	2.53	51.59	485.1	.92	15.46
6234	1976	CHEV	NOVA	305	1.81	14.91	459.4	1.36	18.17
6235	1976	CHEV	CHET	140	.09	.38	309.4	2.17	28.61
6236	1976	CHEV	IMPA	350	1.10	20.29	541.7	1.28	15.38
6237	1976	CHEV	MALI	305	.40	1.07	535.8	1.14	16.47
6238	1976	CHEV	VEGA	140	.36	5.35	349.1	1.39	24.75
6239	1976	CHEV	NOVA	250	.21	.00	404.4	2.07	21.91
6240	1976	CHRY	CORD	318	2.17	6.54	483.4	7.38	17.73
6241	1976	CHRY	NEWY	400	1.30	27.44	717.3	1.58	11.61
6242	1976	DODG	CHAR	360	2.65	79.23	506.9	2.13	13.87
6243	1976	DODG	MONA	400	1.22	4.57	653.3	1.31	13.36
6244	1976	DODG	ASPE	225	.98	2.49	409.3	1.49	21.32
6245	1976	DODG	MONA	360	1.34	43.04	516.6	3.04	15.08
6246	1976	DODG	STAW	225	.81	2.33	404.0	1.12	21.63
6247	1976	DODG	ASPE	225	2.05	19.85	354.9	1.32	22.61
6248	1976	FORD	STAW	400	.57	.87	595.8	2.70	14.82
6249	1976	FORD	ELIT	351	1.14	4.11	542.4	2.29	16.06
6250	1976	FORD	MAVE	200	1.34	2.36	383.0	.52	22.70
6251	1976	FORD	THUN	460	.60	.83	628.5	1.76	14.05
6252	1976	FORD	MUST	140	.73	2.55	354.4	1.88	24.60
6253	1976	FORD	MAVE	250	.69	1.95	442.7	1.18	19.82
6254	1976	FORD	GRAN	302	2.36	.48	457.9	2.47	19.04
6255	1976	FORD	PINT	140	.53	1.70	320.4	2.40	27.33

EMISSION RESULTS IN GRAMS PER MILE
FUEL ECONOMY IN MILES PER GALLON

APPENDIX I

LISTING OF FEDERAL SHORT CYCLE EMISSIONS
RESULTS ON INDIVIDUAL VEHICLES

ST. LOUIS

VEHICLE NUMBER	YEAR	MAKE	MODEL	CID	HC	CO	CO2	NOXC	FUEL ECONOMY
6256	1976	FORD	ELIT	351	1.18	3.30	551.0	3.65	15.85
6257	1976	FORD	STAW	140	.63	.96	397.7	1.11	22.12
6258	1976	FORD	GRAN	250	1.66	5.41	487.8	.89	17.70
6259	1976	FORD	PINT	140	.56	1.70	325.2	1.04	26.92
6260	1976	FORD	STAW	400	1.71	27.45	612.3	1.24	13.43
6261	1976	FORD	LTD	351	1.51	35.90	543.6	3.63	14.67
6262	1976	FORD	THUN	460	1.14	16.64	647.9	6.08	13.10
6263	1976	FORD	MUST	171	1.23	21.71	389.4	1.56	20.77
6264	1976	FORD	ELIT	400	3.67	24.86	545.4	2.77	14.89
6265	1976	FORD	ELIT	351	1.79	5.84	573.4	3.53	15.09
6266	1976	FORD	GRAN	302	2.53	10.12	491.0	2.08	17.24
6267	1976	FORD	PINT	140	.39	.68	376.1	1.25	23.45
6268	1976	LINC	MRK4	460	.58	7.33	721.7	.68	12.07
6270	1976	MERC	MONG	351	1.39	20.26	572.7	2.89	14.58
6271	1976	MERC	MARQ	400	1.23	6.73	551.5	1.45	15.68
6272	1976	MERC	COUG	351	1.05	5.43	554.2	2.11	15.68
6273	1976	MERC	STAW	400	2.25	2.40	588.0	1.62	14.82
6274	1976	MERC	MONA	302	.71	.53	520.5	.79	16.95
6275	1976	OLDS	CUTL	350	3.31	9.23	460.5	6.47	18.28
6276	1976	OLDS	CUTL	350	.72	0.00	487.4	1.61	18.12
6277	1976	OLDS	OMEG	250	1.62	24.57	383.7	3.30	20.76
6279	1976	OLDS	STAW	455	1.65	5.73	628.1	1.23	13.82
6280	1976	OLDS	CUTL	350	1.54	16.63	494.3	.80	16.89
6281	1976	OLDS	CUTL	350	2.00	22.52	453.2	1.09	17.93
6282	1976	OLDS	CUTL	350	1.40	15.00	495.9	1.03	16.94
6283	1976	OLDS	NINE	455	.51	.46	565.2	1.28	15.64
6284	1976	PLYM	VOLA	318	3.81	35.54	470.5	1.15	16.48
6285	1976	PLYM	STAW	318	2.02	9.78	489.2	1.66	17.37
6286	1976	PLYM	FURY	318	1.66	3.61	506.6	1.49	17.15
6287	1976	PLYM	VOLA	225	3.65	31.05	355.3	2.47	21.35
6288	1976	PLYM	STAW	400	1.48	25.92	632.2	2.14	13.10
6289	1976	PLYM	STAW	225	1.32	8.45	412.7	1.76	20.63
6290	1976	PLYM	STAW	225	3.00	31.62	370.8	1.67	20.64
6291	1976	PONT	SUNB	231	2.57	55.02	346.6	1.18	20.11
6292	1976	PONT	BONN	400	.76	.13	513.7	3.43	17.19
6293	1976	PONT	GRNP	350	.40	4.91	512.3	1.70	17.02
6294	1976	PONT	LEMA	260	.31	.20	466.7	3.66	18.96
6295	1976	PONT	CATA	455	5.29	55.92	553.4	.87	13.49
6296	1976	PONT	FIRE	350	2.02	19.18	462.8	1.86	17.77
6297	1976	PONT	GRNP	350	.48	2.88	505.9	2.57	17.34
6298	1976	PONT	VENT	250	1.08	7.54	402.1	3.18	21.27
6299	1976	CAPR	COUP	171	1.15	13.80	433.1	1.12	19.36
6300	1976	DODG	COLT	98	.73	8.63	332.3	1.62	25.49
6301	1976	DATS	B210	85	.91	5.74	294.8	1.19	28.93
6302	1976	DATS	STAW	119	1.15	18.40	313.9	1.40	25.62
6303	1976	DATS	B210	85	1.57	8.41	281.3	2.04	29.64
6304	1976	FIAT	128	79	.61	6.81	283.0	.81	30.02
6305	1976	FIAT	131	107	.96	14.13	423.2	.61	19.79
6306	1976	HOND	CIVI	76	1.05	14.64	300.5	1.53	27.16
6307	1976	HOND	ACCO	98	.50	3.08	288.8	2.58	30.06

EMISSION RESULTS IN GRAMS PER MILE
FUEL ECONOMY IN MILES PER GALLON

APPENDIX I

LISTING OF FEDERAL SHORT CYCLE EMISSIONS
RESULTS ON INDIVIDUAL VEHICLES

ST. LOUIS

VEHICLE NUMBER	YEAR	MAKE	MODEL	CID	HC	CO	CO2	NOXC	FUEL ECONOMY
6308	1976	MAZD	RX4	80	.65	5.78	439.9	.94	19.68
6309	1976	TOYO	CORO	97	1.40	14.08	317.7	2.41	25.78
6310	1976	TOYO	CORO	97	.97	7.94	302.1	2.55	27.94
6311	1976	TOYO	CELI	133	.09	.24	450.7	1.03	19.66
6312	1976	TOYO	CORO	97	1.32	11.40	298.5	2.68	27.69
6313	1976	VOLK	RABB	97	.80	10.39	304.9	1.32	27.41
6314	1976	VOLK	RABB	97	.10	.30	309.7	2.14	28.58
6315	1976	VOLK	RABB	97	.13	1.76	356.2	1.10	24.69
6316	1976	VOLV	264G	163	1.20	11.37	449.4	1.57	18.84
5052	1975	AMC	GREM	258	1.01	16.84	435.4	2.09	19.08
5053	1975	BUIC	STAW	350	.31	.21	581.1	1.37	15.24
5054	1975	BUIC	ELEC	455	3.44	88.36	536.7	.56	12.93
5055	1975	CADI	DEVI	500	.56	.50	616.0	1.23	14.35
5056	1975	CHEV	MONZ	140	.34	6.22	344.9	1.78	24.95
5057	1975	CHEV	MONT	350	.71	11.01	503.9	1.28	16.95
5058	1975	CHEV	MALI	350	1.50	7.44	518.9	1.08	16.58
5059	1975	CHEV	STAW	400	.33	.07	601.2	2.02	14.73
5060	1975	CHEV	CAMA	250	1.69	10.05	445.3	.95	19.03
5061	1975	CHRY	CORD	360	1.37	37.50	595.5	4.39	13.47
5062	1975	DODG	DART	318	.53	6.81	537.1	.75	16.15
5063	1975	FORD	PINT	140	.82	11.10	360.0	1.18	23.36
5064	1975	FORD	MAVE	302	2.25	6.14	585.7	1.65	14.73
5065	1975	FORD	LTD	400	1.72	21.56	581.5	1.26	14.30
5066	1975	FORD	GRAN	250	.36	.42	456.1	2.93	19.38
5067	1975	FORD	GRAN	302	1.17	2.95	487.4	2.38	17.90
5068	1975	MERC	MONG	351	1.02	12.13	637.9	2.54	13.44
5069	1975	OLDS	CUTL	350	.36	1.31	516.9	1.15	17.07
5070	1975	OLDS	98	455	1.17	12.79	562.0	1.63	15.15
5071	1975	PLYM	VALI	225	3.48	57.94	309.5	2.84	21.57
5072	1975	PLYM	VALI	318	1.80	55.54	429.3	.98	16.99
5073	1975	PONT	CATA	400	3.09	63.88	480.6	2.17	15.02
5074	1975	PONT	FIRE	350	5.41	62.04	423.1	2.60	16.50
5075	1975	DATS	B210	85	1.01	5.58	262.1	1.61	32.38
5076	1975	TOYO	CELI	133	1.13	12.40	383.7	4.71	21.82
5077	1975	TOYO	CORO	97	.73	8.45	359.8	1.33	23.64
5078	1975	VOLK	SCIR	90	.30	4.92	325.0	.26	26.60
5317	1975	AMC	MATA	304	.47	.34	527.1	1.74	16.77
5318	1975	BUIC	SKYH	231	1.76	37.77	404.1	1.16	18.92
5320	1975	CHEV	MONZ	140	1.74	15.80	334.2	2.85	24.35
5321	1975	CHEV	IMPA	350	.62	.27	540.5	1.90	16.35
5322	1975	CHEV	STAW	350	2.56	61.45	487.1	1.42	15.00
5323	1975	CHEV	CAMA	350	.31	2.96	527.0	1.68	16.66
5324	1975	CHEV	IMPA	400	.61	.03	569.2	3.40	15.54
5325	1975	DODG	DART	318	1.20	15.85	451.9	2.71	18.47
5326	1975	FORD	MUST	140	1.48	12.97	366.2	1.25	22.68
5327	1975	FORD	LTD	400	1.18	5.19	707.4	1.59	12.34
5328	1975	FORD	LTD	351	.74	5.17	783.1	2.28	11.18
5329	1975	LINC	MRK4	460	6.61	324.66	667.7	.33	7.40
5330	1975	MERC	COUG	351	1.65	2.60	568.7	3.68	15.35
5331	1975	OLDS	CUTL	260	.35	1.71	437.9	2.66	20.10

EMISSION RESULTS IN GRAMS PER MILE
FUEL ECONOMY IN MILES PER GALLON

APPENDIX I

LISTING OF FEDERAL SHORT CYCLE EMISSIONS
RESULTS ON INDIVIDUAL VEHICLES

ST. LOUIS

VEHICLE NUMBER	YEAR	MAKE	MODEL	CID	HC	CO	CO2	NOXC	FUEL ECONOMY
5332	1975	OLDS	CUTL	350	.29	.10	510.4	.78	17.35
5333	1975	PLYM	FURY	318	1.16	20.45	520.1	3.89	15.96
5334	1975	PONT	GRNP	400	3.07	58.60	489.2	1.12	15.02
5335	1975	DATS	710	119	1.19	14.80	323.8	2.79	25.30
5336	1975	FIAT	131	107	.18	7.86	419.9	.88	20.50
5337	1975	HOND	CVCC	91	.33	2.52	299.1	1.44	29.18
5338	1975	MAZD	STAW	70	1.20	12.67	527.3	.97	16.11
4080	1974	AMC	AMBA	360	14.67	18.23	461.0	4.04	16.55
4081	1974	BUIC	CNTY	350	2.59	36.65	503.7	1.92	15.58
4082	1974	CADI	DEVI	472	2.56	28.42	620.7	1.65	13.18
4083	1974	CHEV	VEGA	140	1.78	9.43	315.4	2.15	26.43
4084	1974	CHEV	CHEL	350	3.02	19.92	497.3	1.01	16.49
4085	1974	CHEV	NOVA	250	2.55	23.17	368.1	1.13	21.51
4086	1974	CHEV	NOVA	350	1.84	38.61	454.4	.55	17.04
4087	1974	CHEV	CHEL	350	1.44	7.24	584.7	.97	14.78
4088	1974	CHEV	STAW	400	3.80	86.93	617.5	1.02	11.58
4089	1974	CHRY	NEWP	400	2.44	57.80	557.2	2.83	13.53
4090	1974	DODG	CHAR	318	3.44	54.32	425.4	2.34	17.01
4091	1974	FORD	PINT	122	1.15	15.46	320.0	1.89	25.51
4092	1974	FORD	TORI	302	2.80	18.42	445.6	3.08	18.36
4093	1974	FORD	PINT	140	3.10	53.39	303.6	2.70	22.34
4094	1974	FORD	STAW	400	2.26	33.82	607.6	2.74	13.29
4095	1974	FORD	STAW	351	3.46	47.06	506.9	2.89	15.00
4096	1974	MERC	MONT	302	9.35	65.30	419.4	3.56	16.09
4097	1974	OLDS	CUTL	350	2.75	13.13	549.2	3.63	15.34
4098	1974	OLDS	STAW	455	2.21	11.26	679.0	1.90	12.61
4099	1974	PLYM	SCAM	318	3.10	43.16	450.6	3.61	16.80
4100	1974	PLYM	DUST	225	2.64	3.94	381.4	2.12	22.41
4101	1974	PONT	GRNP	400	9.49	5.99	673.5	.74	12.45
4102	1974	DATS	710	119	2.21	13.95	303.8	2.17	26.68
4103	1974	TOYO	CORO	97	1.42	19.19	308.1	2.08	25.90
4104	1974	TOYO	STAW	120	2.28	77.02	269.0	1.15	22.34
4105	1974	VOLK	SEDA	97	2.37	20.07	260.4	2.85	29.64
4106	1974	VOLK	SEDA	97	2.20	10.73	254.7	2.89	31.86
4339	1974	AMC	HORN	258	2.68	50.76	407.1	3.74	17.92
4340	1974	BUIC	REGA	350	1.99	29.60	519.1	2.82	15.52
4341	1974	BUIC	RIVI	455	3.41	35.52	629.0	3.75	12.76
4342	1974	CHEV	CHEL	350	1.76	15.14	608.7	.99	13.91
4343	1974	CHEV	MONT	350	3.16	8.54	469.9	1.70	17.99
4344	1974	CHEV	CHEL	350	2.82	64.49	476.8	1.08	15.12
4345	1974	CHEV	STAW	400	2.28	31.32	559.0	3.26	14.42
4346	1974	CHEV	VEGA	140	2.28	24.49	369.9	1.06	21.36
4347	1974	DODG	DART	225	2.46	18.78	356.5	6.56	22.54
4348	1974	DODG	DART	318	4.27	42.12	478.5	3.76	15.90
4349	1974	FORD	TORI	351	2.92	28.25	513.6	2.17	15.65
4350	1974	FORD	GALA	400	2.28	46.27	586.1	2.15	13.33
4351	1974	FORD	LTD	400	5.29	46.60	526.8	2.44	14.39
4352	1974	FORD	MUST	140	2.98	69.83	334.6	1.61	19.56
4353	1974	LINC	MRK4	460	3.53	91.49	610.2	1.05	11.60
4354	1974	MERC	MONG	351	2.42	25.33	558.2	1.57	14.65

EMISSION RESULTS IN GRAMS PER MILE
FUEL ECONOMY IN MILES PER GALLON

APPENDIX I

LISTING OF FEDERAL SHORT CYCLE EMISSIONS
RESULTS ON INDIVIDUAL VEHICLES

ST. LOUIS

VEHICLE NUMBER	YEAR	MAKE	MODEL	CID	HC	CO	CO2	NOXC	FUEL ECONOMY
4355	1974	OLDS	CUTL	350	5.48	214.34	416.8	.46	11.51
4356	1974	PLYM	FRY3	360	4.06	91.00	512.1	4.09	13.29
4357	1974	PONT	BONN	400	8.11	132.47	511.2	1.22	11.91
4358	1974	PONT	LEMA	350	3.99	57.72	468.7	4.82	15.52
4359	1974	CAPR	SPOR	122	2.24	13.78	339.9	1.50	24.08
4360	1974	DATS	B210	79	1.46	8.28	279.3	1.09	29.89
4361	1974	MAZD	STAW	70	1.19	8.43	538.6	.54	15.98
3107	1973	AMC	GREM	232	2.06	25.77	439.8	1.50	18.23
3108	1973	BUIC	CNTR	455	2.09	30.77	600.9	1.52	13.53
3109	1973	BUIC	CNTY	350	1.50	37.01	584.5	1.04	13.71
3110	1973	CADI	DEVI	472	1.83	74.11	676.0	.98	11.12
3111	1973	CHEV	VEGA	140	3.33	41.02	338.8	1.97	21.45
3112	1973	CHEV	MONT	350	1.67	30.30	500.3	1.59	16.04
3113	1973	CHEV	CAMA	350	1.97	51.39	438.7	2.50	16.88
3114	1973	CHEV	IMPA	350	1.82	11.02	539.6	3.09	15.77
3115	1973	CHEV	IMPA	350	1.40	29.12	508.1	1.41	15.90
3116	1973	DODG	DART	225	1.99	3.80	363.0	4.57	23.65
3117	1973	FORD	PINT	122	2.10	35.30	379.6	2.25	20.09
3118	1973	FORD	TORI	351	4.43	80.51	490.2	1.25	14.07
3119	1973	FORD	MUST	302	3.47	42.93	527.5	2.03	14.65
3120	1973	FORD	TORI	351	1.83	25.20	576.4	1.88	14.28
3121	1973	FORD	STAW	400	2.58	46.68	562.3	4.81	13.79
3122	1973	MERC	MONG	400	2.41	40.49	593.8	2.34	13.35
3123	1973	OLDS	TORO	455	3.37	83.01	580.0	1.70	12.31
3124	1973	OLDS	CUTL	350	2.24	30.12	493.8	1.42	16.19
3125	1973	PLYM	SATE	318	3.07	36.67	437.4	3.40	17.58
3126	1973	PLYM	VALI	318	4.49	27.77	406.5	1.45	19.11
3127	1973	PONT	GRNV	400	4.90	35.65	595.3	3.65	13.31
3128	1973	PONT	LEMA	350	3.69	6.76	556.0	5.15	15.35
3129	1973	DATS	STAW	97	2.98	35.02	304.1	2.57	24.08
3130	1973	OPEL	STAW	116	1.93	61.81	238.0	1.12	26.01
3131	1973	TOYO	CARI	97	2.09	36.91	260.6	1.53	27.29
3132	1973	VOLK	SEDA	103	3.62	36.70	269.6	1.31	26.20
3133	1973	VOLK	SEDA	97	2.72	19.82	254.5	2.66	30.16
3362	1973	BUIC	CNTY	350	2.16	23.60	543.5	1.84	15.11
3363	1973	BUIC	RIVE	455	3.22	14.91	777.8	1.94	10.94
3364	1973	CHEV	STAW	400	3.43	53.13	553.6	3.04	13.70
3365	1973	CHEV	VEGA	140	2.71	37.78	306.5	2.93	23.70
3366	1973	CHEV	NOVA	250	1.09	13.82	359.2	2.29	23.09
3367	1973	CHEV	IMPA	350	4.82	33.42	501.3	3.66	15.60
3368	1973	CHEV	CAMA	307	2.15	24.09	480.7	2.70	16.89
3369	1973	CHEV	STAW	454	4.41	55.66	648.1	2.23	11.84
3370	1973	CHRY	NEWP	400	3.78	39.67	519.8	4.06	14.94
3371	1973	DODG	CHAR	318	3.32	25.35	483.2	4.85	16.64
3372	1973	DODG	STAW	360	5.11	64.46	579.7	6.04	12.73
3373	1973	FORD	PINT	122	3.90	44.91	257.7	1.89	26.06
3374	1973	FORD	TORI	351	1.77	7.55	540.2	2.44	15.91
3375	1973	FORD	STAW	400	2.78	22.73	489.6	3.26	16.62
3376	1973	FORD	STAW	400	5.66	4.92	649.8	5.04	13.14
3377	1973	MERC	MONG	302	1.90	7.78	608.3	2.49	14.17

EMISSION RESULTS IN GPAMS PER MILE
FUEL ECONOMY IN MILES PER GALLON

APPENDIX I

LISTING OF FEDERAL SHORT CYCLE EMISSIONS
RESULTS ON INDIVIDUAL VEHICLES

ST. LOUIS

VEHICLE NUMBER	YEAR	MAKE	MODEL	CID	HC	CO	CO2	NOXC	FUEL ECONOMY
3378	1973	OLDS	DELT	350	4.07	33.75	553.4	2.89	14.33
3379	1973	OLDS	NNTY	455	1.53	16.95	704.5	2.43	12.06
3380	1973	PLYM	FRY3	360	3.90	77.43	430.2	4.01	15.73
3381	1973	PONT	VENT	350	3.86	36.33	523.4	3.06	14.98
3382	1973	PONT	GRNV	455	1.92	6.39	551.0	1.97	15.65
3383	1973	MERC	CAPR	122	1.34	7.69	253.2	1.30	32.92
3384	1973	MAZD	RX3	70	3.13	22.63	454.6	.71	17.75
2134	1972	AMC	MATA	258	2.42	5.55	405.6	6.17	21.03
2135	1972	BUIC	ELEC	455	2.24	23.03	596.6	7.15	13.87
2136	1972	CADI	CALA	472	1.94	17.49	670.5	3.61	12.60
2137	1972	CHEV	VEGA	140	2.31	8.57	306.9	2.27	27.09
2138	1972	CHEV	STAW	350	2.85	36.52	505.1	2.25	15.53
2139	1972	CHEV	CHEL	350	2.73	45.94	455.5	2.89	16.55
2140	1972	CHEV	CHEL	307	3.31	32.48	408.9	2.92	18.87
2141	1972	CHEV	STAW	350	3.30	44.18	490.7	4.01	15.56
2142	1972	CHEV	CAPR	400	3.18	39.34	494.0	4.84	15.68
2143	1972	DODG	CHAR	318	2.28	5.71	440.6	3.44	19.43
2144	1972	FORD	PINT	122	15.28	19.76	264.6	5.79	25.79
2145	1972	FORD	TORI	351	2.50	36.16	501.6	3.37	15.67
2146	1972	FORD	MAVE	200	2.08	16.61	290.2	6.50	27.49
2147	1972	FORD	STAW	400	2.02	44.57	608.4	3.20	12.96
2148	1972	FORD	LTD	400	2.37	48.31	524.0	3.45	14.61
2149	1972	MERC	MONR	400	2.37	5.32	518.9	6.18	16.60
2150	1972	OLDS	CUTL	350	2.17	36.24	495.2	1.53	15.88
2151	1972	PLYM	DUST	225	2.41	44.93	287.2	2.98	24.29
2152	1972	PLYM	FRY3	360	7.55	119.56	405.2	3.61	14.38
2153	1972	PONT	GRNV	400	3.22	21.08	638.0	3.15	13.03
2154	1972	PONT	FIRE	350	2.76	37.47	582.0	1.71	13.66
2155	1972	DATS	510	97	2.82	19.10	245.2	4.49	31.24
2156	1972	TOYO	CELI	120	3.81	70.63	220.9	2.22	25.80
2157	1972	VOLK	SEDA	97	3.21	51.92	255.1	1.65	25.58
2158	1972	VOLK	SEDA	97	4.57	50.69	228.4	1.64	27.51
2385	1972	BUIC	STAW	350	2.06	18.62	608.5	3.27	13.77
2386	1972	BUIC	LESA	350	4.37	39.71	488.6	5.15	15.71
2387	1972	CHEV	VEGA	140	2.73	33.67	244.7	3.39	28.98
2388	1972	CHEV	NOVA	250	1.38	8.00	436.2	3.55	19.59
2389	1972	CHEV	MALI	350	2.19	23.85	534.4	2.31	15.33
2390	1972	CHEV	IMPA	350	2.62	28.54	561.5	3.63	14.44
2391	1972	CHEV	IMPA	400	1.77	38.37	629.0	2.15	12.77
2392	1972	CHRY	NEWP	400	17.85	193.49	417.7	2.36	11.40
2393	1972	DODG	DEMO	225	3.37	42.89	302.0	4.25	23.35
2394	1972	FORD	PINT	122	1.90	22.72	291.8	5.18	26.61
2395	1972	FORD	TORI	302	2.36	45.16	466.0	1.69	16.30
2396	1972	FORD	MUST	351	3.19	68.02	507.2	2.05	14.22
2397	1972	FORD	GALA	429	1.80	3.47	558.3	5.19	15.59
2398	1972	LINC	MRK4	460	2.60	35.45	595.5	3.12	13.46
2399	1972	MERC	MONG	302	3.34	35.61	558.8	3.45	14.19
2400	1972	OLDS	CUTL	350	2.23	14.35	486.5	3.38	17.20
2401	1972	OLDS	STAW	455	1.74	11.26	564.8	4.33	15.09
2402	1972	PLYM	SATE	318	2.92	34.35	446.7	4.84	17.40

EMISSION RESULTS IN GRAMS PER MILE
FUEL ECONOMY IN MILES PER GALLON

APPENDIX I

LISTING OF FEDERAL SHORT CYCLE EMISSIONS
RESULTS ON INDIVIDUAL VEHICLES

ST. LOUIS

VEHICLE NUMBER	YEAR	MAKE	MODEL	CID	HC	CO	CO2	NOXC	FUEL ECONOMY
2403	1972	PONT	STAW	400	5.37	49.84	460.6	4.59	15.96
2404	1972	CAPR	COUP	122	2.45	43.55	263.1	2.24	26.15
1159	1971	BUIC	RIVE	455	3.89	78.67	654.6	2.34	11.23
1160	1971	BUIC	SKYL	350	6.03	22.81	560.5	1.76	14.42
1161	1971	CHEV	VEGA	140	2.25	27.23	282.1	3.11	26.73
1162	1971	CHEV	CHEL	350	3.98	39.15	445.4	2.81	17.08
1163	1971	CHEV	NOVA	250	.76	6.46	501.4	1.36	17.27
1164	1971	CHEV	IMPA	350	2.02	34.06	472.7	1.87	16.66
1165	1971	CHEV	IMPA	350	1.96	13.36	533.1	3.33	15.84
1166	1971	CHRY	NEWP	383	4.15	75.31	471.5	3.75	14.72
1167	1971	DODG	CHAR	318	9.58	13.44	415.7	5.08	19.00
1168	1971	FORD	PINT	122	1.50	6.49	281.1	3.78	29.98
1169	1971	FORD	TORI	302	1.41	10.81	500.4	2.46	17.01
1170	1971	FORD	MAVE	200	1.99	21.21	340.9	4.79	23.33
1171	1971	FORD	GALA	351	2.20	27.41	475.5	5.18	16.89
1172	1971	FORD	STAW	400	2.26	9.50	567.5	2.95	15.05
1173	1971	MERC	COUG	351	2.93	28.22	441.6	2.90	17.92
1174	1971	OLDS	CUTL	350	2.26	25.99	440.4	5.38	18.17
1175	1971	PLYM	DUST	225	1.68	12.95	359.0	4.21	23.07
1176	1971	PONT	CATA	350	3.44	30.20	493.5	4.51	16.08
1177	1971	PONT	LEMA	350	3.42	35.58	508.9	3.05	15.42
1178	1971	DATS	B110	97	25.62	92.49	131.1	.30	24.81
1179	1971	TOYO	CORO	71	1.54	24.88	261.0	4.39	29.10
1180	1971	VOLK	SEDA	97	2.82	26.64	261.4	2.66	28.43
1405	1971	AMC	MATA	360	2.11	7.55	494.9	2.91	17.29
1406	1971	BUIC	ELEC	455	5.60	51.96	577.5	3.13	13.11
1407	1971	CADI	DEVI	472	1.97	32.74	708.0	3.09	11.59
1408	1971	CHEV	MONT	350	2.98	60.02	511.5	2.39	14.43
1409	1971	CHEV	CHEL	307	3.25	17.42	419.3	4.35	19.42
1410	1971	CHEV	CHEL	350	2.41	28.90	460.4	1.64	17.29
1411	1971	CHEV	IMPA	350	4.98	66.29	407.8	2.78	16.82
1412	1971	DODG	DART	225	6.24	75.07	283.1	4.20	21.09
1413	1971	FORD	MUST	302	6.29	25.44	424.7	4.16	18.31
1414	1971	FORD	TORI	351	2.68	30.31	333.8	1.76	22.76
1415	1971	FORD	LTD	351	22.05	37.88	456.2	4.30	15.15
1416	1971	MERC	MONR	400	4.36	48.30	544.4	5.68	14.00
1417	1971	OLDS	CUTL	350	1.93	16.74	495.8	3.16	16.80
1418	1971	OLDS	CUTL	350	3.01	32.43	455.3	2.85	17.21
1419	1971	PLYM	DUST	318	4.61	107.66	281.9	.80	19.06
1420	1971	PLYM	STAW	360	7.63	242.16	422.2	.95	10.73
1421	1971	PONT	CATA	350	2.80	6.91	532.0	2.99	16.09
1422	1971	VOLK	SEDA	97	5.17	75.06	237.8	.77	23.85
0181	1970	AMC	JAVE	232	3.12	24.82	337.1	2.00	22.99
0182	1970	BUIC	LESA	455	3.58	13.18	565.2	3.59	14.86
0183	1970	CHEV	NOVA	250	1.62	10.74	387.9	2.01	21.65
0184	1970	CHEV	CHEL	307	9.31	66.90	326.2	1.92	19.26
0185	1970	CHEV	CHEL	350	2.48	40.26	456.2	2.00	16.83
0186	1970	CHEV	IMPA	350	5.51	83.67	334.3	2.26	18.37
0187	1970	CHEV	IMPA	350	2.31	26.28	464.6	1.84	17.29
0188	1970	DODG	CORO	225	4.01	61.41	303.2	3.80	21.52

EMISSION RESULTS IN GRAMS PER MILE
FUEL ECONOMY IN MILES PER GALLON

APPENDIX I

LISTING OF FEDERAL SHORT CYCLE EMISSIONS
RESULTS ON INDIVIDUAL VEHICLES

ST. LOUIS

VEHICLE NUMBER	YEAR	MAKE	MODEL	CID	HC	CO	CO2	NOXC	FUEL ECONOMY
0189	1970	FORD	MUST	302	2.20	17.84	463.7	1.24	17.80
0190	1970	FORD	STAW	302	3.61	51.30	403.1	3.02	17.92
0191	1970	FORD	LTD	351	8.07	6.20	459.7	4.29	17.93
0192	1970	FORD	LTD	351	2.09	9.25	441.8	4.20	19.17
0193	1970	MERC	MARQ	390	2.14	15.22	602.8	3.89	14.01
0194	1970	OLDS	STAW	350	3.64	57.05	458.8	2.12	15.85
0195	1970	PLYM	STAW	383	3.53	23.60	522.6	4.91	15.55
0196	1970	PLYM	DUST	318	3.65	66.69	362.8	4.62	18.52
0197	1970	PONT	LEMA	350	4.75	35.92	408.3	4.25	18.50
0198	1970	DATS	510	97	2.08	10.41	218.6	3.31	36.75
0200	1970	VOLK	SEDA	97	2.80	47.44	250.1	2.66	26.61
0423	1970	BUIC	SKYL	350	5.69	117.80	386.5	2.35	15.05
0424	1970	BUIC	SKYL	350	10.67	128.76	378.6	1.54	14.44
0425	1970	CADI	DEVI	472	2.75	22.59	668.9	2.27	12.45
0426	1970	CHEV	CAMA	307	3.67	24.04	436.0	5.06	18.28
0427	1970	CHEV	STAW	350	3.18	43.39	424.7	3.47	17.65
0428	1970	CHEV	IMPA	400	3.63	28.48	488.8	3.95	16.28
0429	1970	CHRY	STAW	383	2.43	18.56	562.3	4.27	14.81
0430	1970	DODG	CHAR	318	5.05	121.88	395.2	1.33	14.73
0431	1970	FORD	MAVE	200	1.52	7.44	343.4	3.55	24.66
0432	1970	FORD	GALA	351	2.08	30.26	586.1	3.20	13.86
0433	1970	FORD	LTD	390	3.53	31.76	472.8	3.88	16.62
0434	1970	OLDS	DELT	350	2.24	23.29	559.6	2.08	14.71
0435	1970	PLYM	SATE	318	5.34	62.56	379.5	3.62	17.94
0436	1970	PONT	GRNP	400	9.53	7.51	471.5	3.45	17.28
0437	1970	VOLK	SEDA	97	3.14	28.93	248.5	1.77	29.20
9438	1969	AMC	RAMB	199	4.42	46.42	338.9	2.30	20.84
9439	1969	BUIC	WILD	430	6.03	91.39	456.1	4.25	14.34
9440	1969	BUIC	SPEC	350	4.06	62.54	410.8	3.16	17.00
9441	1969	CADI	DEVI	472	2.32	15.27	638.0	3.47	13.26
9442	1969	CHEV	NOVA	307	3.24	37.69	390.7	4.26	19.29
9443	1969	CHEV	IMPA	350	3.08	34.36	395.6	5.80	19.32
9444	1969	CHEV	CAMA	307	3.01	39.78	427.0	2.01	17.79
9445	1969	CHEV	IMPA	327	4.23	59.72	514.1	1.89	14.28
9446	1969	CHEV	ELCA	350	6.08	81.43	341.8	2.92	18.15
9447	1969	CHEV	NOVA	250	2.62	18.19	359.9	3.42	22.37
9448	1969	CHEV	BELA	350	2.92	30.66	485.6	3.61	16.34
9449	1969	CHRY	NEWP	383	2.01	19.07	481.5	1.55	17.14
9450	1969	DODG	POLA	318	3.15	42.70	396.3	3.13	18.75
9451	1969	FORD	LTD	390	2.82	24.20	588.2	2.41	13.97
9452	1969	FORD	FALC	302	4.26	17.20	372.3	3.94	21.50
9453	1969	FORD	GALA	351	2.39	33.04	547.3	2.72	14.63
9454	1969	FORD	LTD	390	2.68	23.16	596.8	2.21	13.83
9455	1969	FORD	FAIR	302	3.24	21.47	394.4	6.41	20.24
9456	1969	FORD	THUN	429	2.71	6.67	513.1	4.93	16.68
9457	1969	MERC	MONG	351	2.50	30.78	540.6	1.09	14.87
9458	1969	OLDS	98	455	2.82	18.69	584.3	2.01	14.26
9459	1969	OLDS	CUTL	350	3.81	9.47	485.0	5.26	17.34
9460	1969	PLYM	SATE	318	6.14	97.41	413.7	4.40	15.14
9461	1969	PLYM	VALI	225	28.07	69.70	293.4	3.56	18.04

EMISSION RESULTS IN GRAMS PER MILE
FUEL ECONOMY IN MILES PER GALLON

APPENDIX I

LISTING OF FEDERAL SHORT CYCLE EMISSIONS
RESULTS ON INDIVIDUAL VEHICLES

ST. LOUIS

VEHICLE NUMBER	YEAR	MAKE	MODEL	CID	HC	CO	CO2	NOXC	FUEL ECONOMY
9462	1969	PONT	LEMA	350	3.09	42.87	430.5	4.75	17.48
9463	1969	PONT	CATA	400	4.91	100.22	405.5	2.25	15.34
9464	1969	PONT	STAW	400	4.98	70.59	426.6	3.22	16.04
9465	1969	TOYO	CORO	116	1.22	16.65	291.9	5.04	27.57
9466	1969	VOLK	SEDA	91	2.71	24.59	287.9	3.04	26.48
9467	1969	VOLK	SEDA	91	8.00	80.38	197.9	1.08	25.39
8468	1966	AMC	STAW	199	2.88	24.72	326.9	4.32	23.68
8469	1968	AMC	RAMB	232	2.18	21.03	335.9	4.79	23.61
8470	1967	AMC	REBE	290	3.67	28.93	395.4	3.44	19.62
8471	1968	BUIC	WILD	430	30.20	98.01	460.6	3.32	12.49
8472	1968	BUIC	ELEC	430	8.46	68.75	445.1	6.59	15.30
8473	1968	BUIC	LESA	350	3.26	41.70	445.7	3.36	17.02
8474	1966	CADI	DEVI	429	10.09	194.71	420.8	.77	11.70
8475	1968	CHEV	CHEL	230	2.32	7.79	342.4	5.50	24.51
8476	1967	CHEV	CHEL	283	24.95	120.14	273.5	1.03	16.39
8477	1967	CHEV	IMPA	283	7.06	76.99	350.2	2.33	17.98
8478	1968	CHEV	IMPA	327	12.16	108.25	350.2	1.16	15.88
8479	1966	CHEV	IMPA	327	31.39	108.29	440.0	1.18	12.50
8480	1968	CHEV	IMPA	396	6.41	176.13	390.8	.47	12.90
8481	1966	CHEV	CHEL	283	13.26	133.78	320.8	1.67	15.49
8482	1967	CHEV	CAMA	250	6.70	68.21	287.4	2.15	21.35
8483	1968	CHEV	CHEL	307	7.10	27.45	393.6	6.24	19.33
8484	1968	CHEV	CHEL	318	6.00	59.18	412.8	1.48	16.91
8485	1968	CHEV	IMPA	327	5.64	80.29	423.9	1.77	15.63
8486	1968	CHEV	IMPA	302	6.14	29.67	387.9	5.83	19.55
8487	1968	CHRY	NEWP	383	3.16	40.46	490.6	3.39	15.73
8488	1967	DODG	DART	225	5.74	93.88	284.6	.86	19.71
8489	1968	DODG	CORO	318	3.87	33.84	415.6	2.95	18.45
8490	1968	DODG	MONA	383	2.35	44.02	573.6	1.47	13.65
8491	1967	FORD	MUST	289	5.91	80.29	348.8	4.10	17.98
8492	1967	FORD	FAIR	289	4.17	68.52	372.0	1.58	18.01
8493	1966	FORD	FAIR	289	3.22	52.80	414.6	1.74	17.48
8494	1968	FORD	GALA	302	2.22	17.04	497.6	4.24	16.70
8495	1968	FORD	TORI	302	7.91	11.75	440.9	5.34	18.32
8496	1968	FORD	GALA	390	2.63	34.86	506.3	2.26	15.59
8497	1967	FORD	MUST	200	3.66	49.75	267.4	1.76	24.85
8498	1967	FORD	GALA	289	5.73	73.69	407.4	3.80	16.39
8499	1967	FORD	MUST	289	4.20	73.01	352.4	4.23	18.47
8500	1966	FORD	GALA	390	14.00	95.26	409.3	2.28	14.71
8501	1968	FORD	STAW	390	3.55	25.53	502.6	3.58	16.02
8502	1967	LINC	CONT	462	6.76	197.79	483.4	.89	10.88
8503	1967	MERC	COUG	289	7.44	96.06	321.6	1.68	17.89
8504	1967	OLDS	CUTL	330	6.23	100.23	378.4	.88	15.97
8505	1967	OLDS	98	425	4.46	44.41	613.5	1.58	12.73
8506	1968	OLDS	CUTL	350	5.48	88.91	429.0	3.18	15.14
8507	1968	PLYM	FRY3	318	2.95	14.80	463.7	7.27	17.88
8508	1968	PLYM	FRY3	318	3.88	42.81	403.4	5.04	18.38
8509	1968	PLYM	SATE	383	6.06	53.53	416.2	3.42	17.08
8510	1966	PLYM	FRY3	383	3.85	76.31	327.7	2.14	19.30
8511	1968	PONT	BONN	400	3.95	44.94	469.4	1.86	16.06

EMISSION RESULTS IN GRAMS PER MILE
FUEL ECONOMY IN MILES PER GALLON

APPENDIX I

LISTING OF FEDERAL SHORT CYCLE EMISSIONS
RESULTS ON INDIVIDUAL VEHICLES

ST. LOUIS

VEHICLE NUMBER	YEAR	MAKE	MODEL	CID	HC	CO	CO2	NOXC	FUEL ECONOMY
8512	1966	PONT	CATA	389	7.77	66.79	391.6	3.03	17.03
8513	1968	PONT	TEMP	350	3.50	20.18	436.1	3.80	18.53
8514	1967	PONT	STAW	400	4.36	34.11	465.1	4.59	16.67
8515	1968	PONT	STAW	389	9.34	223.69	401.2	1.43	11.34
8516	1967	VOLK	SEDA	91	7.21	110.81	178.3	1.14	23.65
8517	1966	VOLK	SEDA	97	4.00	55.64	208.3	1.48	28.78

EMISSION RESULTS IN GRAMS PER MILE
FUEL ECONOMY IN MILES PER GALLON

Appendix J

LISTING OF NEW YORK/NEW JERSY SHORT-CYCLE EMISSION RESULTS ON INDIVIDUAL VEHICLES

APPENDIX J

LISTING OF NEW YORK/NEW JERSEY SHORT CYCLE EMISSIONS
RESULTS ON INDIVIDUAL VEHICLES

ST. LOUIS

VEHICLE NUMBER	YEAR	MAKE	MODEL	CID	HC	CO	CO2	NOXC	FUEL ECONOMY
7002	1976	CHEV	C10	350	3.43	85.82	650.3	1.10	11.15
7003	1976	CHEV	C10	350	.51	3.02	688.1	1.13	12.78
7005	1976	DODG	B100	318	1.05	5.03	691.8	1.79	12.62
7007	1976	FORD	CLUB	302	2.83	35.59	534.0	2.29	14.82
7008	1976	FORD	F150	360	3.38	36.54	644.3	1.66	12.46
7010	1976	TOYO	TRUC	140	1.18	12.58	612.7	1.96	13.95
7011	1975	CHEV	C10	350	1.59	22.30	965.6	1.66	8.83
7012	1975	CHEV	TRUC	350	3.30	98.28	638.0	1.49	11.05
7013	1975	CHEV	G10V	350	.90	.05	691.1	.85	12.79
7014	1975	DODG	C100	318	1.95	23.78	656.3	2.66	12.68
7015	1975	FORD	F100	302	.74	.82	778.5	2.04	11.35
7016	1975	FORD	F100	300	1.73	15.57	530.1	1.49	15.85
7017	1975	FORD	F100	360	1.12	35.43	810.5	1.07	10.20
6018	1976	AMC	HORN	258	.95	2.98	513.1	4.31	17.04
6019	1976	BUIC	STAW	350	.22	0.00	711.2	2.01	12.47
6020	1976	BUIC	SKYL	231	1.62	19.28	650.4	4.40	12.94
6021	1976	CADI	ELDO	500	4.99	76.73	691.1	1.22	10.73
6022	1976	CHEV	IMPA	350	.41	1.24	780.6	1.46	11.32
6023	1976	CHEV	MONT	350	.91	9.12	702.3	.91	12.34
6024	1976	CHEV	VEGA	140	2.45	64.10	394.5	1.06	17.65
6025	1976	CHEV	STAW	400	.40	2.52	761.5	1.34	11.58
6026	1976	CHEV	ELCA	305	.25	.05	651.8	2.22	13.60
6027	1976	CHEV	NOVA	250	2.04	26.66	544.3	1.42	14.98
6029	1976	DODG	STAW	318	3.97	47.06	546.9	4.63	14.01
6030	1976	DODG	ASPE	225	2.86	23.34	458.9	2.08	17.59
6031	1976	FORD	MUST	140	.57	8.02	573.1	2.08	15.11
6032	1976	FORD	STAW	400	2.77	47.99	710.2	1.23	11.17
6033	1976	FORD	STAW	351	.59	0.00	676.3	1.92	13.09
6034	1976	FORD	GRAN	250	5.31	67.34	532.8	1.15	13.54
6035	1976	FORD	GRAN	302	1.59	29.90	587.7	1.75	13.87
6036	1976	FORD	TORI	351	1.02	1.07	651.8	1.67	13.52
6037	1976	MERC	COME	250	4.42	46.22	538.9	.84	14.19
6038	1976	MERC	MONA	200	2.43	26.68	578.3	2.12	14.14
6039	1976	OLDS	CUTL	260	.53	.17	661.9	2.07	13.37
6040	1976	OLDS	CUTL	350	5.66	74.02	543.7	1.16	13.09
6041	1976	OLDS	DELT	455	9.09	66.79	620.0	.77	11.77
6042	1976	PLYM	DUST	225	4.55	82.02	395.9	1.17	16.46
6043	1976	PLYM	VOLA	318	9.55	18.16	1277.9	4.03	6.64
6044	1976	PONT	LEMA	350	.84	.65	590.5	2.10	14.94
6045	1976	PONT	GRNP	400	2.84	16.19	705.9	1.55	11.99
6046	1976	DATS	B210	85	1.72	14.05	384.9	2.04	21.52
6047	1976	DATS	B210	85	1.60	9.81	321.5	2.66	25.95
6048	1976	TOYO	CORO	97	1.48	17.53	443.5	3.42	18.66
6049	1976	TOYO	CELI	133	1.13	20.08	545.1	2.37	15.30
6050	1976	VOLK	SEDA	97	3.96	99.46	306.6	.53	18.67
6051	1976	VOLK	RABB	97	1.82	15.49	417.4	3.48	19.83
6201	1976	AMC	STAW	304	.63	12.92	659.1	1.52	13.03
6202	1976	AMC	HORN	258	1.08	2.17	539.4	2.76	16.25
6203	1976	AMC	MATA	304	.60	1.34	659.0	1.80	13.39
6204	1976	AMC	HORN	232	2.07	50.16	460.7	2.50	16.25

EMISSION RESULTS IN GRAMS PER MILE
FUEL ECONOMY IN MILES PER GALLON

APPENDIX J

LISTING OF NEW YORK/NEW JERSEY SHORT CYCLE EMISSIONS
RESULTS ON INDIVIDUAL VEHICLES

ST. LOUIS

VEHICLE NUMBER	YEAR	MAKE	MODEL	CID	HC	CO	CO2	NOxC	FUEL ECONOMY
6205	1976	BUIC	CNTY	231	2.97	70.73	455.1	4.29	15.42
6206	1976	BUIC	LASA	350	.49	1.95	700.1	1.52	12.59
6207	1976	BUIC	REGA	350	.33	4.63	746.1	1.52	11.77
6208	1976	BUIC	STAW	350	.67	3.40	712.3	1.39	12.33
6209	1976	BUIC	LESA	350	.49	5.00	694.9	1.02	12.60
6210	1976	BUIC	SKYH	231	2.02	28.35	445.3	1.16	17.89
6211	1976	BUIC	SKYL	231	.32	.64	405.4	.79	21.79
6212	1976	CADI	SEVI	350	1.60	1.86	635.8	1.59	13.79
6213	1976	CADI	FLEE	500	1.73	16.37	776.5	.95	10.99
6215	1976	CADI	DEVI	500	.48	0.00	802.6	1.02	11.04
6216	1976	CHEV	CHET	97	5.63	40.57	358.6	3.40	20.16
6217	1976	CHEV	CAPR	350	3.47	146.50	646.2	2.38	10.00
6218	1976	CHEV	MONT	350	.27	0.00	719.3	1.34	12.32
6219	1976	CHEV	STAW	350	2.29	44.81	685.5	1.38	11.63
6220	1976	CHEV	CAMA	250	.53	0.00	554.5	1.49	15.96
6221	1976	CHEV	STAW	350	.44	6.90	656.7	1.28	13.27
6222	1976	CHEV	CAMA	305	3.36	44.59	512.0	3.61	14.97
6223	1976	CHEV	CAPR	454	.61	.11	773.2	.88	11.45
6224	1976	CHEV	MONT	350	3.76	87.45	583.4	.82	12.11
6225	1976	CHEV	IMPA	350	2.61	26.66	634.8	1.18	12.96
6226	1976	CHEV	CAMA	305	.49	6.53	643.5	1.28	13.54
6227	1976	CHEV	MONT	350	.50	9.29	615.6	3.19	14.05
6228	1976	CHEV	VEGA	140	2.24	32.72	509.4	1.50	15.63
6229	1976	CHEV	MONZ	140	1.63	16.83	542.9	1.31	15.45
6230	1976	CHEV	MONT	350	.23	1.20	732.1	1.24	12.08
6231	1976	CHEV	CAMA	350	3.31	72.19	569.1	.84	12.81
6232	1976	CHEV	CAMA	305	.46	1.85	530.4	1.17	16.60
6233	1976	CHEV	MALI	350	3.26	61.83	632.5	1.16	11.99
6234	1976	CHEV	NOVA	305	3.04	29.04	544.6	1.72	14.79
6235	1976	CHEV	CHET	140	.17	3.01	474.6	3.31	18.49
6236	1976	CHEV	IMPA	350	1.34	26.84	630.1	1.26	13.12
6237	1976	CHEV	MALI	305	.47	2.56	712.8	1.37	12.36
6238	1976	CHEV	VEGA	140	.39	6.02	461.8	1.75	18.78
6239	1976	CHEV	NOVA	250	.34	.17	550.4	2.27	16.09
6240	1976	CHRY	CORD	318	3.41	8.18	671.3	6.52	12.77
6241	1976	CHRY	NEWY	400	2.18	49.41	893.7	1.85	9.07
6242	1976	DODG	CHAR	360	2.95	109.47	610.1	1.27	11.21
6243	1976	DODG	MONA	400	1.60	4.82	717.5	1.19	12.16
6244	1976	DODG	ASPE	225	2.09	4.53	510.9	1.71	16.92
6245	1976	DODG	MONA	360	2.09	35.51	1358.4	1.34	6.25
6246	1976	DODG	STAW	225	1.42	3.98	517.4	1.44	16.81
6247	1976	DODG	ASPE	225	2.51	26.61	432.2	1.49	18.42
6248	1976	FORD	STAW	400	.68	.27	801.6	2.95	11.04
6249	1976	FORD	ELIT	351	1.55	5.30	759.0	2.36	11.49
6250	1976	FORD	MAVE	200	2.68	21.91	442.8	1.02	18.27
6251	1976	FORD	THUN	460	1.18	8.15	794.7	1.56	10.94
6252	1976	FORD	MUST	140	1.35	8.47	513.4	2.37	16.72
6253	1976	FORD	MAVE	250	2.19	21.02	642.2	2.42	13.01
6254	1976	FORD	GRAN	302	2.42	.50	705.6	3.09	12.43
6255	1976	FORD	PINT	140	1.05	5.69	470.1	2.51	18.40

EMISSION RESULTS IN GRAMS PER MILE
FUEL ECONOMY IN MILES PER GALLON

APPENDIX I

LISTING OF NEW YORK/NEW JERSEY SHORT CYCLE EMISSIONS
RESULTS ON INDIVIDUAL VEHICLES

ST. LOUIS

VEHICLE NUMBER	YEAR	MAKE	MODEL	CID	HC	CO	CO2	NOxC	FUEL ECONOMY
6256	1976	FORD	ELIT	351	1.75	4.75	672.5	2.72	12.95
6257	1976	FORD	STAW	140	.62	1.99	533.8	1.37	16.47
6258	1976	FORD	GRAN	250	4.37	54.00	575.0	1.34	13.17
6259	1976	FORD	PINT	140	.90	3.18	474.2	1.49	18.41
6260	1976	FORD	STAW	400	6.15	124.62	698.1	1.14	9.72
6261	1976	FORD	LTD	351	2.63	67.65	715.3	3.43	10.69
6262	1976	FORD	THUN	460	5.17	103.43	719.8	4.55	9.88
6263	1976	FORD	MUST	171	2.34	46.63	470.8	2.06	16.09
6264	1976	FORD	ELIT	400	11.07	81.26	629.8	2.70	11.20
6265	1976	FORD	ELIT	351	2.18	13.26	776.5	3.17	11.04
6266	1976	FORD	GRAN	302	7.36	53.46	646.8	2.35	11.77
6267	1976	FORD	PINT	140	.72	1.55	548.4	1.93	16.05
6268	1976	LINC	MRK4	460	1.67	26.59	825.1	.73	10.18
6270	1976	MERC	MONG	351	2.30	45.20	603.9	2.09	13.01
6271	1976	MERC	MARQ	400	1.37	3.13	604.0	1.34	14.47
6272	1976	MERC	COUG	351	3.03	67.65	630.4	1.90	11.89
6273	1976	MERC	STAW	400	3.00	14.46	705.8	1.46	12.03
6274	1976	MERC	MONA	302	1.23	7.27	645.5	.63	13.43
6275	1976	OLDS	CUTL	350	6.63	19.76	626.9	6.40	13.07
6276	1976	OLDS	CUTL	350	.61	0.00	640.1	1.34	13.82
6277	1976	OLDS	OMEG	250	2.90	49.41	513.0	2.27	14.80
6279	1976	OLDS	STAW	455	2.49	13.34	747.0	1.17	11.44
6280	1976	OLDS	CUTL	350	2.60	36.62	629.5	1.11	12.76
6281	1976	OLDS	CUTL	350	3.19	39.01	591.4	1.46	13.39
6282	1976	OLDS	CUTL	350	2.24	24.98	642.3	1.14	12.89
6283	1976	OLDS	NINE	455	.64	0.00	702.3	1.26	12.60
6284	1976	PLYM	VOLA	318	5.14	73.68	597.4	1.74	12.17
6285	1976	PLYM	STAW	318	3.24	19.71	587.9	2.26	14.11
6286	1976	PLYM	FURY	318	3.08	17.51	642.0	2.61	13.07
6287	1976	PLYM	VOLA	225	6.72	70.17	430.1	3.11	15.80
6288	1976	PLYM	STAW	400	2.39	54.27	827.7	1.36	9.64
6289	1976	PLYM	STAW	225	2.16	12.59	492.4	2.05	17.10
6290	1976	PLYM	STAW	225	4.27	61.53	467.2	1.96	15.37
6291	1976	PONT	SUNB	231	3.38	96.44	472.3	1.89	13.99
6292	1976	PONT	BONN	400	1.36	.22	633.0	3.01	13.92
6293	1976	PONT	GRNP	350	.49	3.98	611.1	1.96	14.34
6294	1976	PONT	LEMA	260	.39	0.00	608.7	3.53	14.55
6295	1976	PONT	CATA	455	10.33	108.14	656.3	.78	10.33
6296	1976	PONT	FIRE	350	3.03	25.77	601.2	2.36	13.63
6297	1976	PONT	GRNP	350	.46	1.34	652.0	2.94	13.54
6298	1976	PONT	VENT	250	2.02	13.27	528.2	2.65	15.98
6299	1976	CAPR	COUP	171	1.91	16.23	547.7	1.54	15.32
6300	1976	DODG	COLT	98	1.56	17.82	495.7	2.55	16.79
6301	1976	DATS	B210	85	1.86	19.34	487.3	2.04	16.95
6302	1976	DATS	STAW	119	2.39	27.96	405.4	2.22	19.43
6303	1976	DATS	B210	85	2.95	25.42	405.4	3.41	19.52
6304	1976	FIAT	128	79	1.66	13.14	322.9	.84	25.44
6305	1976	FIAT	131	107	4.11	18.25	484.1	.98	16.88
6306	1976	HOND	CIVI	76	1.75	24.11	461.2	2.77	17.59
6307	1976	HOND	ACCO	98	1.03	4.37	379.5	3.08	22.78

EMISSION RESULTS IN GRAMS PER MILE
FUEL ECONOMY IN MILES PER GALLON

APPENDIX J

LISTING OF NEW YORK/NEW JERSEY SHORT CYCLE EMISSIONS
RESULTS ON INDIVIDUAL VEHICLES

ST. LOUIS

VEHICLE NUMBER	YEAR	MAKE	MODEL	CID	HC	CO	CO2	NOXC	FUEL ECONOMY
6308	1976	MAZD	RX4	80	3.07	15.56	569.1	1.47	14.71
6309	1976	TOYO	CORO	97	2.03	22.04	447.6	2.60	18.16
6310	1976	TOYO	CORO	97	1.24	20.66	437.1	2.90	18.74
6311	1976	TOYO	CELI	133	.14	.22	567.3	1.51	15.62
6312	1976	TOYO	CORO	97	1.92	23.32	416.3	3.76	19.33
6313	1976	VOLK	RABB	97	1.26	18.92	474.6	3.05	17.46
6314	1976	VOLK	RABB	97	.30	5.05	474.8	2.72	18.35
6315	1976	VOLK	RABB	97	.27	.38	503.1	1.88	17.59
6316	1976	VOLV	264G	163	1.83	22.33	557.6	1.69	14.83
5052	1975	AMC	GREM	258	1.55	24.54	624.5	2.55	13.29
5053	1975	BUIC	STAW	350	.41	1.05	772.6	1.37	11.44
5054	1975	BUIC	ELEC	455	3.48	61.94	761.6	.81	10.20
5055	1975	CADI	DEVI	500	.56	0.00	752.8	1.43	11.76
5056	1975	CHEV	MONZ	140	.62	10.82	471.7	2.98	18.09
5057	1975	CHEV	MONT	350	1.15	19.36	648.2	1.63	13.01
5058	1975	CHEV	MALI	350	2.62	8.51	666.6	1.96	12.90
5059	1975	CHEV	STAW	400	.38	0.00	762.5	1.64	11.62
5060	1975	CHEV	CAMA	250	2.54	18.22	540.6	1.08	15.37
5061	1975	CHRY	CORD	360	2.21	67.18	778.3	2.40	9.96
5062	1975	DODG	DART	318	1.37	26.14	722.6	1.02	11.56
5063	1975	FORD	PINT	140	1.73	26.29	515.3	2.34	15.79
5064	1975	FORD	MAVE	302	3.39	13.27	751.1	1.54	11.34
5065	1975	FORD	LTD	400	2.70	34.49	806.1	1.69	10.22
5066	1975	FORD	GRAN	250	.50	.22	600.4	1.66	14.73
5067	1975	FORD	GRAN	302	2.88	32.56	642.3	2.67	12.63
5068	1975	MERC	MONG	351	1.90	22.76	826.6	2.47	10.22
5069	1975	OLDS	CUTL	350	.70	3.02	740.6	1.67	11.87
5070	1975	OLDS	98	455	1.29	0.00	762.8	2.38	11.57
5071	1975	PLYM	VALI	225	4.16	100.47	410.2	2.91	15.27
5072	1975	PLYM	VALI	318	1.92	51.92	651.2	.84	12.01
5073	1975	PONT	CATA	400	5.27	123.58	622.4	2.09	10.65
5074	1975	PONT	FIRE	350	7.56	91.19	580.3	3.12	11.87
5075	1975	DATS	B210	85	1.47	14.58	323.9	2.43	25.25
5076	1975	TOYO	CELI	133	1.90	15.19	526.0	6.24	15.97
5077	1975	TOYO	CORO	97	1.64	12.74	495.9	2.33	17.03
5078	1975	VOLK	SCIR	90	.72	12.23	432.9	.62	19.53
5317	1975	AMC	MATA	304	.36	0.00	657.0	1.69	13.48
5318	1975	BUIC	SKYH	231	3.81	73.67	567.8	2.05	12.76
5320	1975	CHEV	MONZ	140	3.95	41.60	404.4	3.49	18.40
5321	1975	CHEV	IMPA	350	.82	.27	669.7	1.93	13.19
5322	1975	CHEV	STAW	350	3.55	93.27	611.4	1.41	11.54
5323	1975	CHEV	CAMA	350	.36	3.68	589.5	1.52	14.88
5324	1975	CHEV	IMPA	400	.35	.05	720.1	2.76	12.30
5325	1975	DODG	DART	318	2.17	31.47	592.5	2.22	13.68
5326	1975	FORD	MUST	140	1.13	27.06	475.0	1.73	17.03
5327	1975	FORD	LTD	400	1.63	10.03	860.3	1.39	10.07
5328	1975	FORD	LTD	351	1.71	6.72	889.6	2.15	9.80
5329	1975	LINC	MRK4	460	5.85	252.53	735.9	.35	7.71
5330	1975	MERC	COUG	351	2.10	4.16	781.5	4.12	11.17
5331	1975	OLDS	CUTL	260	.49	.76	573.6	2.63	15.40

EMISSION RESULTS IN GRAMS PER MILE
FUEL ECONOMY IN MILES PER GALLON

APPENDIX J

LISTING OF NEW YORK/NEW JERSEY SHORT CYCLE EMISSIONS
RESULTS ON INDIVIDUAL VEHICLES

ST. LOUIS

VEHICLE NUMBER	YEAR	MAKE	MODEL	CID	HC	CO	CO2	NOXC	FUEL ECONOMY
5332	1975	OLDS	CUTL	350	.36	.93	662.6	1.17	13.34
5333	1975	PLYM	FURY	318	1.77	26.32	684.6	3.33	12.13
5334	1975	PONT	GRNP	400	3.64	80.32	587.3	1.15	12.24
5335	1975	DATS	710	119	1.55	26.08	439.1	3.44	18.30
5336	1975	FIAT	131	107	.43	20.01	561.1	1.32	14.94
5337	1975	HOND	CVCC	91	1.14	5.65	432.4	2.81	19.95
5338	1975	MAZD	STAW	70	7.20	54.02	652.5	1.89	11.68
4080	1974	AMC	AMBA	360	20.60	53.11	578.4	3.80	12.21
4081	1974	BUIC	CNTY	350	4.16	39.40	658.2	2.28	12.10
4082	1974	CADI	DEVI	472	2.48	22.83	776.9	1.67	10.82
4083	1974	CHEV	VEGA	140	2.60	13.28	468.1	3.66	17.85
4084	1974	CHEV	CHEL	350	3.89	27.76	685.3	1.15	11.97
4085	1974	CHEV	NOVA	250	2.95	42.19	468.0	1.27	16.33
4086	1974	CHEV	NOVA	350	3.77	65.89	684.1	1.18	11.10
4087	1974	CHEV	CHEL	350	2.46	9.89	823.6	1.40	10.48
4088	1974	CHEV	STAW	400	5.91	141.01	804.5	1.00	8.49
4089	1974	CHRY	NEWP	400	4.35	118.02	745.4	1.99	9.40
4090	1974	DODG	CHAR	318	4.24	82.86	584.6	1.62	12.19
4091	1974	FORD	PINT	122	2.89	47.67	472.9	2.34	15.94
4092	1974	FORD	TORI	302	4.56	53.77	556.3	3.01	13.55
4093	1974	FORD	PINT	140	4.00	95.57	449.8	2.72	14.49
4094	1974	FORD	STAW	400	3.18	49.36	853.0	1.83	9.44
4095	1974	FORD	STAW	351	4.95	92.86	625.6	2.64	11.27
4096	1974	MERC	MONT	302	18.39	123.25	398.9	2.07	13.64
4097	1974	OLDS	CUTL	350	3.42	18.28	761.3	2.51	11.08
4098	1974	OLDS	STAW	455	4.43	72.27	838.3	1.68	9.19
4099	1974	PLYM	SCAM	318	3.78	72.91	678.4	2.69	11.03
4100	1974	PLYM	DUST	225	3.60	6.15	531.3	1.57	16.07
4101	1974	PONT	GRNP	400	7.69	6.67	904.0	.83	9.45
4102	1974	DATS	710	119	3.39	31.53	396.4	2.68	19.44
4103	1974	TOYO	CORO	97	2.32	35.48	437.1	3.48	17.74
4104	1974	TOYO	STAW	120	3.63	81.52	382.1	2.98	17.01
4105	1974	VOLK	SEDA	97	4.33	51.15	363.2	3.97	19.41
4106	1974	VOLK	SEDA	97	4.66	27.67	379.1	4.16	20.29
4339	1974	AMC	HORN	258	3.75	73.74	574.0	5.00	12.65
4340	1974	BUIC	REGA	350	3.20	61.58	689.7	2.78	11.14
4341	1974	BUIC	RIVI	455	4.28	62.05	671.4	2.45	11.34
4342	1974	CHEV	CHEL	350	2.55	58.78	783.7	.95	10.04
4343	1974	CHEV	MONT	350	4.49	15.59	682.9	1.93	12.30
4344	1974	CHEV	CHEL	350	4.03	111.08	636.4	1.14	10.77
4345	1974	CHEV	STAW	400	2.69	34.56	656.6	2.59	12.34
4346	1974	CHEV	VEGA	140	4.22	59.19	476.9	1.49	15.22
4347	1974	DODG	DART	225	3.94	33.88	476.6	7.73	16.37
4348	1974	DODG	DART	318	5.22	73.96	632.3	2.41	11.60
4349	1974	FORD	TORI	351	3.43	38.33	716.8	1.67	11.26
4350	1974	FORD	GALA	400	3.44	85.47	760.0	2.13	9.80
4351	1974	FORD	LTD	400	17.00	86.56	562.9	1.97	11.79
4352	1974	FORD	MUST	140	4.24	122.76	466.2	1.82	13.20
4353	1974	LINC	MRK4	460	4.11	100.42	725.9	.90	9.90
4354	1974	MERC	MONG	351	3.12	33.16	651.6	1.35	12.44

EMISSION RESULTS IN GRAMS PER MILE
FUEL ECONOMY IN MILES PER GALLON

APPENDIX J

LISTING OF NEW YORK/NEW JERSEY SHORT CYCLE EMISSIONS
RESULTS ON INDIVIDUAL VEHICLES

ST. LOUIS

VEHICLE NUMBER	YEAR	MAKE	MODEL	CID	HC	CO	CO2	NOXC	FUEL ECONOMY
4355	1974	OLDS	CUTL	350	6.72	255.50	554.3	.47	9.08
4356	1974	PLYM	FRY3	360	5.37	165.05	674.8	2.26	9.33
4357	1974	PONT	BONN	400	11.74	227.41	612.5	1.08	8.81
4358	1974	PONT	LEMA	350	6.48	118.58	588.8	4.76	11.15
4359	1974	CAPR	SPOR	122	4.87	29.01	490.5	2.86	16.09
4360	1974	DATS	B210	79	3.03	25.36	409.6	2.33	19.34
4361	1974	MAZD	STAW	70	3.94	27.69	567.8	1.16	14.23
3107	1973	AMC	GREM	232	4.31	49.33	533.5	1.80	14.21
3108	1973	BUIC	CNTR	455	3.35	25.62	738.0	2.03	11.25
3109	1973	BUIC	CNTY	350	3.67	80.39	742.4	1.27	10.08
3110	1973	CADI	DEVI	472	1.90	30.64	987.3	1.61	8.52
3111	1973	CHEV	VEGA	140	6.60	89.10	426.8	2.20	15.10
3112	1973	CHEV	MONT	350	.04	56.65	648.9	1.77	12.02
3113	1973	CHEV	CAMA	350	2.70	66.12	573.5	3.01	12.94
3114	1973	CHEV	IMPA	350	4.26	12.08	638.0	2.90	13.24
3115	1973	CHEV	IMPA	350	2.11	46.90	774.2	2.97	10.39
3116	1973	DODG	DART	225	2.04	6.16	494.3	5.01	17.39
3117	1973	FORD	PINT	122	2.73	62.26	456.3	3.10	15.77
3118	1973	FORD	TORI	351	6.15	136.93	688.2	1.56	9.62
3119	1973	FORD	MUST	302	4.93	84.21	719.1	2.67	10.24
3120	1973	FORD	TORI	351	2.28	40.82	798.2	1.95	10.21
3121	1973	FORD	STAW	400	7.58	130.94	657.4	2.94	10.00
3122	1973	MERC	MONG	400	2.83	88.83	766.2	2.49	9.70
3123	1973	OLDS	TORO	455	4.40	14.42	806.0	2.86	10.53
3124	1973	OLDS	CUTL	350	3.57	58.69	637.0	1.49	11.99
3125	1973	PLYM	SATE	318	4.41	70.03	614.9	2.67	12.01
3126	1973	PLYM	VALI	318	3.22	48.90	580.4	1.30	13.30
3127	1973	PONT	GRNV	400	7.14	63.11	727.8	4.75	10.45
3128	1973	PONT	LEMA	350	3.02	5.56	858.4	3.94	10.12
3129	1973	DATS	STAW	97	5.96	57.25	414.8	3.43	16.95
3130	1973	OPEL	STAW	116	2.70	81.74	369.0	2.40	17.54
3131	1973	TOYO	CARI	97	3.33	68.27	369.2	2.05	18.22
3132	1973	VOLK	SEDA	103	7.26	74.65	344.1	1.69	18.32
3133	1973	VOLK	SEDA	97	5.18	55.44	370.3	3.66	18.73
3362	1973	BUIC	CNTY	350	2.61	50.40	758.9	1.94	10.49
3363	1973	BUIC	RIVE	455	9.57	24.62	993.8	2.04	8.35
3364	1973	CHEV	STAW	400	5.09	107.18	725.8	2.32	9.75
3365	1973	CHEV	VEGA	140	4.69	85.30	437.5	3.86	15.13
3366	1973	CHEV	NOVA	250	1.28	13.32	540.5	3.18	15.69
3367	1973	CHEV	IMPA	350	2.35	49.44	657.9	2.78	11.94
3368	1973	CHEV	CAMA	307	2.55	55.29	654.3	2.72	11.85
3369	1973	CHEV	STAW	454	8.92	87.74	834.7	2.05	8.87
3370	1973	CHRY	NEWP	400	4.45	65.16	681.5	2.25	11.12
3371	1973	DODG	CHAR	318	4.25	49.05	670.1	2.78	11.67
3372	1973	DODG	STAW	360	7.61	98.10	643.4	3.00	10.80
3373	1973	FORD	PINT	122	5.92	70.91	345.9	3.37	18.64
3374	1973	FORD	TORI	351	2.50	11.64	756.1	1.70	11.35
3375	1973	FORD	STAW	400	3.86	37.22	600.0	3.10	13.23
3376	1973	FORD	STAW	400	11.15	6.77	762.3	3.90	10.98
3377	1973	MERC	MONG	302	3.10	13.41	822.1	2.69	10.40

EMISSION RESULTS IN GRAMS PER MILE
FUEL ECONOMY IN MILES PER GALLON

APPENDIX J

LISTING OF NEW YORK/NEW JERSEY SHORT CYCLE EMISSIONS
RESULTS ON INDIVIDUAL VEHICLES

ST. LOUIS

VEHICLE NUMBER	YEAR	MAKE	MODEL	CID	HC	CO	CO2	NOXC	FUEL ECONOMY
3378	1973	OLDS	DELT	350	5.49	40.95	735.8	2.51	10.86
3379	1973	OLDS	NNTY	455	2.72	38.25	811.1	2.06	10.09
3380	1973	PLYM	FRY3	360	5.85	141.28	559.2	2.60	11.10
3381	1973	PONT	VENT	350	4.53	72.33	722.0	1.32	10.44
3382	1973	PONT	GRNV	455	2.68	8.56	712.3	1.68	12.09
3383	1973	MERC	CAPR	122	2.60	19.69	375.4	1.87	21.41
3384	1973	MAZD	RX3	70	8.19	49.79	617.9	1.55	12.29
2134	1972	AMC	MATA	258	2.79	5.61	533.9	7.66	16.09
2135	1972	BUIC	ELEC	455	3.12	51.77	759.4	5.01	10.43
2136	1972	CADI	CALA	472	2.09	28.91	839.3	2.36	9.96
2137	1972	CHEV	VEGA	140	4.88	25.18	391.0	3.21	19.90
2138	1972	CHEV	STAW	350	3.30	53.64	680.4	2.01	11.45
2139	1972	CHEV	CHEL	350	4.33	88.19	605.5	2.27	11.71
2140	1972	CHEV	CHEL	307	4.01	56.95	561.1	2.09	13.38
2141	1972	CHEV	STAW	350	4.01	54.95	607.8	3.32	12.56
2142	1972	CHEV	CAPR	400	5.01	79.88	647.6	3.84	11.25
2143	1972	DODG	CHAR	318	2.84	7.20	633.0	3.82	13.59
2144	1972	FORD	PINT	122	19.69	48.88	383.7	8.57	16.97
2145	1972	FORD	TORI	351	3.06	62.86	626.2	3.42	12.08
2146	1972	FORD	MAVE	200	3.07	25.42	434.5	8.99	18.33
2147	1972	FORD	STAW	400	3.21	97.06	789.8	2.87	9.32
2148	1972	FORD	LTD	400	3.46	76.96	739.5	3.13	10.19
2149	1972	MERC	MONR	400	3.80	4.99	724.2	7.31	11.93
2150	1972	OLDS	CUTL	350	2.66	7.74	733.2	2.93	11.77
2151	1972	PLYM	DUST	225	3.04	50.63	421.9	4.32	17.36
2152	1972	PLYM	FRY3	360	12.97	214.80	502.9	3.53	10.07
2153	1972	PONT	GRNV	400	3.44	44.69	876.9	2.21	9.26
2154	1972	PONT	FIRE	350	3.88	40.52	866.2	1.99	9.42
2155	1972	DATS	510	97	4.44	37.86	370.6	6.00	19.98
2156	1972	TOYO	CELI	120	7.15	72.34	333.5	5.02	18.89
2157	1972	VOLK	SEDA	97	7.66	128.54	388.0	3.09	14.45
2158	1972	VOLK	SEDA	97	7.94	95.54	335.0	2.61	17.39
2385	1972	BUIC	STAW	350	3.21	21.57	815.1	3.22	10.33
2386	1972	BUIC	LESA	350	5.71	56.42	622.1	4.09	12.18
2387	1972	CHEV	VEGA	140	3.37	40.84	396.7	4.25	18.82
2388	1972	CHEV	NOVA	250	1.77	12.77	637.5	2.56	13.38
2389	1972	CHEV	MALI	350	2.70	40.16	719.2	1.88	11.22
2390	1972	CHEV	IMPA	350	3.06	27.63	773.7	2.68	10.73
2391	1972	CHEV	IMPA	400	2.97	60.03	838.5	2.10	9.42
2392	1972	CHRY	NEWP	400	24.95	336.51	590.1	2.21	7.41
2393	1972	DODG	DEMO	225	4.31	77.21	408.6	5.56	16.33
2394	1972	FORD	PINT	122	2.95	54.26	412.4	5.16	17.51
2395	1972	FORD	TORI	302	4.83	108.66	551.8	1.42	12.03
2396	1972	FORD	MUST	351	4.07	145.23	651.1	2.38	9.95
2397	1972	FORD	GALA	429	2.62	5.36	716.9	4.55	12.10
2398	1972	LINC	MRK4	460	4.31	64.64	776.1	2.67	9.96
2399	1972	MERC	MONG	302	5.37	57.40	706.9	2.59	10.90
2400	1972	OLDS	CUTL	350	2.92	24.91	676.4	2.59	12.25
2401	1972	OLDS	STAW	455	2.33	18.57	699.1	3.13	12.06
2402	1972	PLYM	SATE	318	4.05	63.10	618.1	5.06	12.16

EMISSION RESULTS IN GRAMS PER MILE
FUEL ECONOMY IN MILES PER GALLON

APPENDIX J

LISTING OF NEW YORK/NEW JERSEY SHORT CYCLE EMISSIONS
RESULTS ON INDIVIDUAL VEHICLES

ST. LOUIS

VEHICLE NUMBER	YEAR	MAKE	MODEL	CID	HC	CO	CO2	NOXC	FUEL ECONOMY
2403	1972	PONT	STAW	400	7.55	102.66	541.7	3.17	12.21
2404	1972	CAPR	COUP	122	5.10	96.47	350.7	2.95	17.12
1159	1971	BUIC	RIVE	455	4.84	110.69	907.1	2.84	8.10
1160	1971	BUIC	SKYL	350	9.56	55.96	775.2	1.99	9.93
1161	1971	CHEV	VEGA	140	3.58	60.02	421.7	3.71	16.83
1162	1971	CHEV	CHEL	350	6.79	86.90	626.6	3.22	11.31
1163	1971	CHEV	NOVA	250	1.37	5.03	704.5	1.90	12.38
1164	1971	CHEV	IMPA	350	3.03	29.89	689.2	2.59	11.90
1165	1971	CHEV	IMPA	350	2.27	11.37	712.0	2.63	12.04
1166	1971	CHRY	NEWP	383	5.29	118.38	619.9	3.47	10.79
1167	1971	DODG	CHAR	318	14.83	17.46	553.3	5.32	14.14
1168	1971	FORD	PINT	122	2.22	16.71	412.6	5.11	19.91
1169	1971	FORD	TORI	302	4.46	12.89	695.1	3.22	12.17
1170	1971	FORD	MAVE	200	2.84	38.81	501.0	6.74	15.54
1171	1971	FORD	GALA	351	3.65	77.63	587.3	4.23	12.31
1172	1971	FORD	STAW	400	2.85	13.12	765.1	2.66	11.17
1173	1971	MERC	COUG	351	4.38	69.64	577.5	3.26	12.66
1174	1971	OLDS	CUTL	350	3.14	46.50	615.0	4.00	12.71
1175	1971	PLYM	DUST	225	2.56	27.09	521.4	4.69	15.51
1176	1971	PONT	CATA	350	4.93	54.11	673.2	3.88	11.47
1177	1971	PONT	LEMA	350	4.66	62.69	722.9	2.01	10.61
1178	1971	DATS	B110	97	44.15	166.50	204.4	.40	14.64
1179	1971	TOYO	CORO	71	2.65	46.51	364.1	6.44	19.92
1180	1971	VOLK	SEDA	97	6.27	74.74	373.4	3.34	17.38
1405	1971	AMC	MATA	360	3.03	8.79	731.4	3.09	11.76
1406	1971	BUIC	ELEC	455	8.73	103.23	737.9	2.96	9.57
1407	1971	CADI	DEVI	472	1.84	49.67	904.5	2.00	8.98
1408	1971	CHEV	MONT	350	4.34	112.21	641.9	2.13	10.67
1409	1971	CHEV	CHEL	307	5.16	41.78	525.2	4.27	14.62
1410	1971	CHEV	CHEL	350	3.43	55.34	603.7	2.22	12.65
1411	1971	CHEV	IMPA	350	7.95	129.85	592.8	2.81	10.80
1412	1971	DODG	DART	225	10.43	140.66	371.7	4.93	14.18
1413	1971	FORD	MUST	302	5.35	56.32	570.6	4.43	13.13
1414	1971	FORD	TORI	351	4.03	53.47	376.7	1.92	18.75
1415	1971	FORD	LTD	351	25.64	63.00	594.6	3.69	11.45
1416	1971	MERC	MONR	400	4.38	99.08	677.8	4.16	10.47
1417	1971	OLDS	CUTL	350	2.57	27.59	694.1	3.16	11.90
1418	1971	OLDS	CUTL	350	4.21	54.03	635.7	4.38	12.09
1419	1971	PLYM	DUST	318	7.72	182.08	533.2	2.26	10.52
1420	1971	PLYM	STAW	360	7.36	238.40	601.7	1.34	8.88
1421	1971	PONT	CATA	350	2.75	8.08	759.2	2.06	11.37
1422	1971	VOLK	SEDA	97	11.21	138.28	358.0	1.78	14.53
0181	1970	AMC	JAVE	232	4.91	47.97	452.4	2.85	16.33
0182	1970	BUIC	LESA	455	7.93	20.84	693.1	3.35	11.82
0183	1970	CHEV	NOVA	250	3.43	62.78	558.4	2.67	13.29
0184	1970	CHEV	CHEL	307	17.79	125.25	418.4	2.22	13.21
0185	1970	CHEV	CHEL	350	3.93	76.69	642.9	2.73	11.44
0186	1970	CHEV	IMPA	350	6.31	99.48	448.4	2.58	14.21
0187	1970	CHEV	IMPA	350	2.52	37.25	640.8	2.11	12.55
0188	1970	DODG	CORO	225	4.68	111.71	372.0	3.39	15.78

EMISSION RESULTS IN GRAMS PER MILE
FUEL ECONOMY IN MILES PER GALLON

APPENDIX J

LISTING OF NEW YORK/NEW JERSEY SHORT CYCLE EMISSIONS
RESULTS ON INDIVIDUAL VEHICLES

ST. LOUIS

VEHICLE NUMBER	YEAR	MAKE	MODEL	CID	HC	CO	CO2	NOXC	FUEL ECONOMY
0189	1970	FORD	MUST	302	3.46	40.44	624.6	2.00	12.69
0190	1970	FORD	STAW	302	5.09	96.71	483.4	2.64	13.62
0191	1970	FORD	LTD	351	10.32	25.96	564.4	3.78	13.91
0192	1970	FORD	LTD	351	2.33	12.60	591.2	4.17	14.35
0193	1970	MERC	MARQ	390	3.70	39.00	874.2	6.32	9.37
0194	1970	OLDS	STAW	350	5.10	101.79	656.2	1.77	10.66
0195	1970	PLYM	STAW	383	4.09	25.07	693.3	4.46	11.90
0196	1970	PLYM	DUST	318	5.85	155.60	489.4	4.43	11.80
0197	1970	PONT	LEMA	350	7.54	84.81	529.6	4.09	12.92
0198	1970	DATS	510	97	3.53	19.29	327.7	4.96	24.04
0200	1970	VOLK	SEDA	97	5.24	98.10	369.7	4.07	16.42
0423	1970	BUIC	SKYL	350	8.43	189.77	532.5	3.65	10.35
0424	1970	BUIC	SKYL	350	16.27	221.40	475.8	2.12	10.14
0425	1970	CADI	DEVI	472	5.08	21.52	727.5	1.71	11.42
0426	1970	CHEV	CAMA	307	4.31	40.98	591.9	3.66	13.25
0427	1970	CHEV	STAW	350	4.88	86.27	494.5	2.95	13.75
0428	1970	CHEV	IMPA	400	5.59	62.83	606.3	3.70	12.28
0429	1970	CHRY	STAW	383	3.08	35.37	748.2	3.87	10.91
0430	1970	DODG	CHAR	318	6.33	132.96	631.4	2.15	10.32
0431	1970	FORD	MAVE	200	2.31	15.39	502.8	4.94	16.61
0432	1970	FORD	GALA	351	3.02	53.83	751.1	3.21	10.50
0433	1970	FORD	LTD	390	4.72	52.34	613.1	3.22	12.50
0434	1970	OLDS	DELT	350	2.89	38.76	727.4	2.02	11.13
0435	1970	PLYM	SATE	318	6.96	113.91	519.6	3.93	12.32
0436	1970	PONT	GRNP	400	15.71	8.20	629.0	2.93	12.83
0437	1970	VOLK	SEDA	97	6.33	77.87	343.9	3.01	18.25
9438	1969	AMC	RAMB	199	6.42	90.66	463.3	2.50	14.18
9439	1969	BUIC	WILD	430	9.07	165.76	549.6	3.46	10.58
9440	1969	BUIC	SPEC	350	8.67	123.77	512.3	3.50	12.09
9441	1969	CADI	DEVI	472	7.89	15.10	785.5	3.00	10.64
9442	1969	CHEV	NOVA	307	4.61	85.86	523.0	4.20	13.20
9443	1969	CHEV	IMPA	350	4.47	66.60	487.7	5.57	14.63
9444	1969	CHEV	CAMA	307	4.31	74.02	598.0	1.83	12.19
9445	1969	CHEV	IMPA	327	5.83	102.19	703.0	2.43	10.06
9446	1969	CHEV	ELCA	350	8.98	139.50	468.8	4.28	12.39
9447	1969	CHEV	NOVA	250	10.94	69.54	519.7	3.83	13.37
9448	1969	CHEV	BELA	350	3.42	51.20	695.8	2.86	11.28
9449	1969	CHRY	NEWP	383	2.93	22.57	634.8	1.08	13.06
9450	1969	DODG	POLA	318	3.73	42.87	552.5	3.62	14.05
9451	1969	FORD	LTD	390	4.22	39.62	771.4	2.74	10.48
9452	1969	FORD	FALC	302	7.52	10.32	551.1	5.23	15.01
9453	1969	FORD	GALA	351	3.97	72.88	693.2	2.84	10.82
9454	1969	FORD	LTD	390	3.84	24.00	807.9	2.43	10.35
9455	1969	FORD	FAIR	302	4.44	44.60	552.5	7.03	13.94
9456	1969	FORD	THUN	429	3.10	8.55	679.0	4.05	12.64
9457	1969	MERC	MONG	351	3.76	67.10	666.0	1.40	11.33
9458	1969	OLDS	98	455	3.60	27.22	780.9	1.98	10.63
9459	1969	OLDS	CUTL	350	5.73	15.46	697.9	5.94	11.99
9460	1969	PLYM	SATE	318	10.91	183.56	517.6	4.15	10.56
9461	1969	PLYM	VALI	225	39.21	124.70	424.9	4.64	11.91

EMISSION RESULTS IN GRAMS PER MILE
FUEL ECONOMY IN MILES PER GALLON

APPENDIX

LISTING OF NEW YORK/NEW JERSEY SHORT CYCLE EMISSIONS
RESULTS ON INDIVIDUAL VEHICLES

ST. LOUIS

VEHICLE NUMBER	YEAR	MAKE	MODEL	CID	HC	CO	CO2	NOXC	FUEL ECONOMY
9462	1969	PONT	LEMA	350	4.49	74.54	515.2	5.48	11.89
9463	1969	PONT	CATA	400	6.33	151.96	509.6	1.58	11.55
9464	1969	PONT	STAW	400	7.04	100.45	666.7	5.07	10.48
9465	1969	TOYO	CORO	116	2.03	27.57	411.1	7.32	19.26
9466	1969	VOLK	SEDA	91	5.63	57.90	396.3	4.52	17.57
9467	1969	VOLK	SEDA	91	20.33	148.16	278.8	1.37	15.41
8468	1966	AMC	STAW	199	4.23	54.26	453.1	4.23	16.09
8469	1968	AMC	RAMB	232	2.86	28.51	518.2	7.23	15.52
8470	1967	AMC	REBE	290	4.40	50.51	512.5	3.03	14.65
8471	1968	BUIC	WILD	430	40.47	153.92	618.4	3.38	8.98
8472	1968	BUIC	ELEC	430	11.37	133.16	564.8	6.17	10.96
8473	1968	BUIC	LESA	350	4.73	75.64	577.4	2.98	12.48
8474	1966	CADI	DEVI	429	12.10	255.12	519.6	.77	9.26
8475	1968	CHEV	CHEL	230	2.47	2.22	477.0	5.14	18.17
8476	1967	CHEV	CHEL	283	32.36	167.55	366.9	1.25	12.11
8477	1967	CHEV	IMPA	283	8.65	107.42	465.9	2.38	13.40
8478	1968	CHEV	IMPA	327	17.69	156.02	457.5	1.54	11.70
8479	1966	CHEV	IMPA	327	37.34	119.49	558.5	1.19	10.26
8480	1968	CHEV	IMPA	396	8.11	233.92	519.9	.51	9.72
8481	1966	CHEV	CHEL	283	12.40	131.01	418.0	3.65	13.38
8482	1967	CHEV	CAMA	250	10.08	113.64	389.0	2.82	14.80
8483	1968	CHEV	CHEL	307	11.46	54.92	483.4	6.22	14.64
8484	1968	CHEV	CHEL	318	8.83	103.52	508.0	1.68	12.70
8485	1968	CHEV	IMPA	327	7.49	128.75	542.8	2.04	11.54
8486	1968	CHEV	IMPA	302	9.40	53.44	637.0	12.91	11.82
8487	1968	CHRY	NEWP	383	4.19	53.49	727.4	3.44	10.76
8488	1967	DODG	DART	225	6.65	121.58	400.8	1.10	14.48
8489	1968	DODG	CORO	318	4.24	25.58	557.3	3.61	14.53
8490	1968	DODG	MONA	383	3.01	42.79	730.4	1.60	11.00
8491	1967	FORD	MUST	289	6.59	125.86	453.4	4.76	13.21
8492	1967	FORD	FAIR	289	6.36	135.34	484.7	2.03	12.37
8493	1966	FORD	FAIR	289	4.86	90.56	585.3	1.95	11.94
8494	1968	FORD	GALA	302	2.79	19.23	684.0	4.32	12.27
8495	1968	FORD	TORI	302	13.70	20.95	638.1	5.26	12.42
8496	1968	FORD	GALA	390	3.87	63.41	641.0	2.23	11.79
8497	1967	FORD	MUST	200	4.57	76.74	380.9	1.60	17.20
8498	1967	FORD	GALA	289	8.43	129.76	565.8	3.16	11.14
8499	1967	FORD	MUST	289	5.25	115.67	477.4	4.47	13.13
8500	1966	FORD	GALA	390	20.79	162.34	533.3	2.13	10.39
8501	1968	FORD	STAW	390	4.60	43.93	653.3	3.03	12.04
8502	1967	LINC	CONT	462	6.98	202.97	580.0	.84	9.64
8503	1967	MERC	COUG	289	10.73	142.65	426.9	1.97	12.96
8504	1967	OLDS	CUTL	330	8.19	147.29	514.4	1.23	11.50
8505	1967	OLDS	98	425	4.83	58.35	744.5	1.53	10.42
8506	1968	OLDS	CUTL	350	8.74	163.55	557.9	2.99	10.53
8507	1968	PLYM	FRY3	318	4.67	18.67	629.3	7.79	13.18
8508	1968	PLYM	FRY3	318	4.43	80.27	525.4	4.59	13.33
8509	1968	PLYM	SATE	383	7.44	80.45	581.5	4.31	12.13
8510	1966	PLYM	FRY3	383	5.27	99.77	416.2	2.55	15.05
8511	1968	PONT	BONN	400	5.90	82.23	598.0	1.57	11.90

EMISSION RESULTS IN GRAMS PER MILE
FUEL ECONOMY IN MILES PER GALLON

APPENDIX J

LISTING OF NEW YORK/NEW JERSEY SHORT CYCLE EMISSIONS
RESULTS ON INDIVIDUAL VEHICLES

ST. LOUIS

VEHICLE NUMBER	YEAR	MAKE	MODEL	CID	HC	CO	CO2	NOXC	FUEL ECONOMY
8512	1966	PONT	CATA	389	10.95	119.00	507.3	2.32	12.17
8513	1968	PONT	TEMP	350	4.37	41.00	579.9	3.87	13.48
8514	1967	PONT	STAW	400	6.07	47.92	579.7	4.28	13.16
8515	1968	PONT	STAW	389	12.65	349.69	551.1	1.19	7.78
8516	1967	VOLK	SEDA	91	8.34	135.84	288.9	2.77	16.78
8517	1966	VOLK	SEDA	97	9.81	110.80	302.9	2.01	17.47

EMISSION RESULTS IN GRAMS PER MILE
FUEL ECONOMY IN MILES PER GALLON

Appendix K

LISTING OF CLAYTON KEY-MODE EMISSION RESULTS ON INDIVIDUAL VEHICLES

APPENDIX K

LISTING OF CLAYTON KEY MODE EMISSION
RESULTS ON INDIVIDUAL VEHICLES

ST. LOUIS

VEHICLE NUMBER	YEAR	MAKE	MODEL	CID	HP	HIGH SPEED HC	HIGH SPEED CO	HIGH SPEED NO	LOW SPEED HC	LOW SPEED CO	LOW SPEED NO	IDLE HC	IDLE CO	IDLE NO
7002	1976	CHEV	C10	350	30.0	15.	.06	550.	10.	0.00	200.	55.	1.60	40.
7003	1976	CHEV	C10	350	30.0	15.	.04	2000.	15.	0.00	400.	10.	0.00	120.
7005	1976	DODG	B100	318	24.0	7.	0.00	2200.	5.	0.00	1300.	4.	0.00	120.
7007	1976	FORD	CLUB	302	30.0	25.	.03	2500.	40.	.03	800.	95.	1.25	75.
7008	1976	FORD	F150	360	30.0	62.	.38	980.	63.	.42	260.	52.	.14	86.
7010	1976	TOYO	TRUC	140	15.0	10.	.03	250.	15.	.06	150.	18.	.26	23.
7011	1975	CHEV	C10	350	30.0	24.	.48	1050.	10.	.11	220.	10.	0.00	180.
7012	1975	CHEV	TRUC	350	30.0	15.	.01	1825.	14.	0.00	630.	85.	1.90	62.
7013	1975	CHEV	G10V	350	30.0	10.	0.00	780.	10.	0.00	260.	12.	0.00	75.
7014	1975	DODG	C100	318	24.0	6.	0.00	3500.	7.	0.00	1450.	9.	.08	120.
7015	1975	FORD	F100	302	24.0	7.	.01	610.	6.	0.00	475.	5.	0.00	51.
7016	1975	FORD	F100	300	24.0	6.	.01	570.	6.	0.00	550.	6.	0.00	40.
7017	1975	FORD	F100	360	24.0	13.	.07	495.	15.	.17	240.	18.	.54	36.
6018	1976	AMC	HORN	258	24.0	15.	.03	1500.	25.	.03	1700.	38.	.20	200.
6019	1976	BUIC	STAW	350	30.0	11.	0.00	1725.	9.	0.00	700.	8.	0.00	170.
6020	1976	BUIC	SKYL	231	24.0	10.	.01	780.	14.	0.00	380.	35.	4.40	160.
6021	1976	CADI	ELDO	500	30.0	12.	0.00	860.	21.	0.00	430.	112.	1.70	80.
6022	1976	CHEV	IMPA	350	30.0	7.	.01	1700.	6.	0.00	370.	7.	0.00	445.
6023	1976	CHEV	MONT	350	30.0	18.	.02	1550.	14.	0.00	370.	16.	0.00	320.
6024	1976	CHEV	VEGA	140	15.0	10.	.01	1250.	7.	.03	68.	40.	.85	48.
6025	1976	CHEV	STAW	400	30.0	18.	.01	1500.	15.	0.00	400.	75.	.50	120.
6026	1976	CHEV	ELCA	305	30.0	4.	0.00	2400.	4.	0.00	600.	5.	0.00	210.
6027	1976	CHEV	NOVA	250	24.0	4.	.01	470.	6.	.01	680.	23.	.27	49.
6029	1976	DODG	STAW	318	24.0	50.	.01	890.	30.	0.00	130.	160.	.24	42.
6030	1976	DODG	ASPE	225	24.0	17.	.01	1650.	28.	.01	380.	72.	.70	100.
6031	1976	FORD	MUST	140	15.0	47.	.02	980.	40.	.01	440.	25.	0.00	58.
6032	1976	FORD	STAW	400	30.0	16.	.06	520.	17.	0.00	380.	195.	3.60	26.
6033	1976	FORD	STAW	351	30.0	12.	.01	400.	12.	0.00	340.	12.	0.00	300.
6034	1976	FORD	GRAN	250	24.0	29.	.01	475.	25.	0.00	96.	24.	0.00	30.
6035	1976	FORD	GRAN	302	24.0	35.	0.00	700.	25.	0.00	350.	17.	0.00	45.
6036	1976	FORD	TORI	351	30.0	35.	.04	490.	25.	0.00	340.	25.	0.00	64.
6037	1976	MERC	COME	250	24.0	26.	0.00	800.	24.	0.00	100.	35.	0.00	28.
6038	1976	MERC	MONA	200	24.0	10.	0.00	700.	12.	0.00	150.	15.	0.00	90.
6039	1976	OLDS	CUTL	260	24.0	3.	0.00	535.	4.	0.00	520.	3.	0.00	710.
6040	1976	OLDS	CUTL	350	30.0	34.	.07	820.	24.	.01	370.	190.	2.30	23.
6041	1976	OLDS	DELT	455	30.0	18.	0.00	925.	14.	0.00	310.	225.	1.95	8.
6042	1976	PLYM	DUST	225	24.0	14.	.01	1200.	20.	.01	880.	75.	1.10	45.
6043	1976	PLYM	VOLA	318	24.0	15.	0.00	500.	50.	.01	150.	40.	.03	110.
6044	1976	PONT	LEMA	350	30.0	40.	0.00	1400.	30.	0.00	700.	25.	0.00	150.
6045	1976	PONT	GRNP	400	30.0	6.	.01	1000.	6.	0.00	620.	10.	.01	41.
6046	1976	DATS	B210	85	15.0	6.	.01	850.	9.	.01	710.	7.	.07	32.
6047	1976	DATS	B210	85	15.0	38.	.14	920.	48.	.13	900.	70.	.30	72.
6048	1976	TOYO	CORO	97	15.0	13.	.01	1850.	16.	.07	630.	8.	.13	23.
6049	1976	TOYO	CELI	133	15.0	5.	.01	600.	3.	.02	110.	4.	.06	18.
6050	1976	VOLK	SEDA	97	15.0	131.	2.20	4.	112.	1.55	5.	102.	1.33	4.
6051	1976	VOLK	RABB	97	15.0	60.	.26	2600.	40.	.17	1000.	18.	.18	48.
6201	1976	AMC	STAW	304	24.0	18.	0.00	990.	16.	0.00	500.	14.	0.00	68.
6202	1976	AMC	HORN	258	24.0	6.	0.00	720.	14.	.02	860.	10.	.01	180.
6203	1976	AMC	MATA	304	30.0	25.	.10	510.	15.	0.00	445.	10.	0.00	85.
6204	1976	AMC	HORN	232	24.0	15.	.04	2400.	15.	.04	1800.	10.	.13	38.

APPENDIX K

LISTING OF CLAYTON KEY MODE EMISSION
RESULTS ON INDIVIDUAL VEHICLES

ST. LOUIS

VEHICLE NUMBER	YEAR	MAKE	MODEL	CID	HP	HIGH SPEED HC	HIGH SPEED CO	HIGH SPEED NO	LOW SPEED HC	LOW SPEED CO	LOW SPEED NO	IDLE HC	IDLE CO	IDLE NO
6205	1976	BUIC	CNTY	231	24.0	40.	.02	1950.	29.	.08	680.	215.	4.10	71.
6206	1976	BUIC	LASA	350	30.0	7.	.01	980.	10.	0.00	860.	10.	0.00	140.
6207	1976	BUIC	REGA	350	30.0	8.	.01	950.	8.	0.00	660.	6.	0.00	120.
6208	1976	BUIC	STAW	350	30.0	6.	.01	1450.	7.	0.00	620.	7.	.01	140.
6209	1976	BUIC	LESA	350	30.0	8.	.01	840.	15.	.01	495.	10.	.01	100.
6210	1976	BUIC	SKYH	231	24.0	15.	.01	1900.	65.	.70	240.	75.	.60	72.
6211	1976	BUIC	SKYL	231	24.0	10.	0.00	980.	13.	0.00	140.	7.	0.00	120.
6212	1976	CADI	SEVI	350	30.0	5.	0.00	1600.	4.	0.00	780.	2.	0.00	140.
6213	1976	CADI	FLEE	500	30.0	8.	0.00	680.	12.	0.00	350.	70.	.70	98.
6215	1976	CADI	DEVI	500	30.0	7.	0.00	390.	10.	0.00	240.	7.	0.00	240.
6216	1976	CHEV	CHET	97	15.0	42.	.04	2000.	25.	0.00	1350.	200.	2.35	10.
6217	1976	CHEV	CAPR	350	30.0	10.	.01	880.	12.	.14	240.	50.	1.55	24.
6218	1976	CHEV	MONT	350	30.0	7.	0.00	1250.	7.	0.00	330.	5.	0.00	140.
6219	1976	CHEV	STAW	350	30.0	12.	.01	1950.	10.	.08	240.	20.	.30	140.
6220	1976	CHEV	CAMA	250	24.0	6.	0.00	550.	7.	0.00	930.	5.	0.00	185.
6221	1976	CHEV	STAW	350	30.0	7.	.01	1600.	0.	0.00	410.	0.	0.00	46.
6222	1976	CHEV	CAMA	305	24.0	34.	.18	3850.	26.	.06	720.	88.	1.00	66.
6223	1976	CHEV	CAPR	454	30.0	6.	.01	350.	8.	0.00	110.	10.	0.00	14.
6224	1976	CHEV	MONT	350	30.0	16.	.01	1800.	11.	0.00	420.	40.	.70	45.
6225	1976	CHEV	IMPA	350	30.0	22.	.12	1150.	17.	.16	220.	12.	.01	160.
6226	1976	CHEV	CAMA	305	24.0	12.	.11	1175.	5.	0.00	260.	4.	0.00	180.
6227	1976	CHEV	MONT	350	30.0	6.	0.00	1900.	7.	0.00	1000.	7.	0.00	190.
6228	1976	CHEV	VEGA	140	15.0	3.	0.00	1300.	3.	0.00	440.	5.	.05	63.
6229	1976	CHEV	MONZ	140	15.0	16.	0.00	920.	17.	0.00	230.	40.	.60	60.
6230	1976	CHEV	MONT	350	30.0	20.	0.00	1475.	16.	.01	325.	16.	0.00	105.
6231	1976	CHEV	CAMA	350	24.0	54.	.70	1100.	24.	.08	250.	85.	.80	60.
6232	1976	CHEV	CAMA	305	24.0	17.	.02	970.	13.	0.00	290.	10.	0.00	72.
6233	1976	CHEV	MALI	350	30.0	2.	0.00	1100.	3.	0.00	310.	3.	0.00	64.
6234	1976	CHEV	NOVA	305	24.0	12.	.03	1600.	10.	.02	280.	27.	.22	80.
6235	1976	CHEV	CHET	140	15.0	8.	0.00	1700.	5.	0.00	2400.	4.	0.00	390.
6236	1976	CHEV	IMPA	350	30.0	10.	.02	1450.	19.	.01	680.	7.	0.00	120.
6237	1976	CHEV	MALI	305	24.0	6.	0.00	1250.	5.	0.00	200.	5.	0.00	260.
6238	1976	CHEV	VEGA	140	15.0	8.	0.00	935.	7.	0.00	390.	6.	0.00	115.
6239	1976	CHEV	NOVA	250	24.0	8.	0.00	180.	8.	0.00	360.	7.	0.00	125.
6240	1976	CHRY	CORD	318	30.0	6.	.01	2800.	8.	.01	2300.	15.	.04	70.
6241	1976	CHRY	NEWY	400	30.0	12.	.03	625.	12.	.03	270.	28.	.75	95.
6242	1976	DODG	CHAR	360	30.0	25.	.24	1700.	25.	.08	1520.	55.	1.70	40.
6243	1976	DODG	MONA	400	30.0	7.	.03	400.	8.	.03	210.	16.	.03	74.
6244	1976	DODG	ASPE	225	24.0	10.	.01	920.	15.	0.00	440.	15.	.02	310.
6245	1976	DODG	MONA	360	30.0	10.	0.00	2200.	10.	0.00	1700.	50.	1.40	66.
6246	1976	DODG	STAW	225	24.0	10.	.01	760.	12.	.01	280.	12.	.01	220.
6247	1976	DODG	ASPE	225	24.0	27.	.28	780.	24.	.07	360.	100.	.70	54.
6248	1976	FORD	STAW	400	30.0	7.	0.00	1225.	3.	0.00	575.	5.	0.00	400.
6249	1976	FORD	ELIT	351	30.0	55.	.05	750.	50.	.15	450.	65.	.08	140.
6250	1976	FORD	MAVE	200	24.0	16.	.04	360.	21.	.01	100.	25.	0.00	62.
6251	1976	FORD	THUN	460	30.0	11.	.01	720.	8.	.01	360.	10.	0.00	180.
6252	1976	FORD	MUST	140	15.0	5.	.01	620.	5.	0.00	140.	4.	0.00	36.
6253	1976	FORD	MAVE	250	24.0	10.	0.00	180.	10.	0.00	42.	10.	0.00	63.
6254	1976	FORD	GRAN	302	24.0	35.	0.00	305.	33.	0.00	150.	28.	0.00	125.
6255	1976	FORD	PINT	140	15.0	22.	.01	1450.	15.	.02	370.	10.	.01	38.

APPENDIX K

LISTING OF CLAYTON KEY MODE EMISSION
RESULTS ON INDIVIDUAL VEHICLES

ST. LOUIS

VEHICLE NUMBER	YEAR	MAKE	MODEL	CID	HP	HIGH SPEED HC	HIGH SPEED CO	HIGH SPEED NO	LOW SPEED HC	LOW SPEED CO	LOW SPEED NO	IDLE HC	IDLE CO	IDLE NO
6256	1976	FORD	ELIT	351	30.0	50.	.04	800.	60.	.05	810.	75.	.15	200.
6257	1976	FORD	STAW	140	15.0	7.	0.00	550.	10.	0.00	195.	6.	0.00	56.
6258	1976	FORD	GRAN	250	24.0	0.	0.00	380.	4.	0.00	60.	2.	0.00	15.
6259	1976	FORD	PINT	140	15.0	5.	0.00	520.	5.	0.00	300.	7.	0.00	35.
6260	1976	FORD	STAW	400	30.0	14.	.08	460.	7.	.01	340.	130.	2.70	13.
6261	1976	FORD	LTD	351	30.0	7.	0.00	3300.	8.	.01	1800.	15.	.39	72.
6262	1976	FORD	THUN	460	30.0	12.	0.00	2800.	7.	0.00	965.	20.	.90	26.
6263	1976	FORD	MUST	171	24.0	23.	.08	1550.	20.	.01	580.	12.	0.00	44.
6264	1976	FORD	ELIT	400	30.0	24.	.04	1050.	26.	0.00	760.	130.	2.50	12.
6265	1976	FORD	ELIT	351	30.0	27.	.03	1000.	31.	.07	1025.	24.	.03	165.
6266	1976	FORD	GRAN	302	24.0	55.	.02	320.	47.	.01	160.	37.	0.00	33.
6267	1976	FORD	PINT	140	15.0	10.	0.00	94.	10.	.01	26.	8.	0.00	5.
6268	1976	LINC	MRK4	460	30.0	10.	.06	240.	8.	.01	120.	8.	0.00	240.
6270	1976	MERC	MONG	351	30.0	26.	.02	720.	27.	.05	850.	28.	.65	52.
6271	1976	MERC	MARQ	400	30.0	45.	.80	660.	30.	.26	390.	26.	.08	200.
6272	1976	MERC	COUG	351	30.0	22.	.02	660.	32.	.01	445.	180.	2.80	27.
6273	1976	MERC	STAW	400	30.0	8.	.04	630.	24.	.01	250.	10.	0.00	105.
6274	1976	MERC	MONA	302	24.0	30.	.03	440.	24.	.01	180.	16.	.01	35.
6275	1976	OLDS	CUTL	350	30.0	32.	0.00	2500.	3.	0.00	1500.	62.	.34	210.
6276	1976	OLDS	CUTL	350	30.0	20.	0.00	400.	17.	0.00	220.	14.	0.00	80.
6277	1976	OLDS	OMEG	250	24.0	5.	0.00	920.	5.	0.00	580.	10.	.20	28.
6279	1976	OLDS	STAW	455	30.0	16.	0.00	340.	14.	.01	130.	26.	.16	66.
6280	1976	OLDS	CUTL	350	30.0	5.	0.00	1250.	5.	0.00	320.	30.	.47	84.
6281	1976	OLDS	CUTL	350	24.0	12.	0.00	440.	15.	0.00	78.	95.	1.40	30.
6282	1976	OLDS	CUTL	350	30.0	10.	.01	1200.	6.	0.00	310.	30.	.22	160.
6283	1976	OLDS	NINE	455	30.0	12.	.01	860.	17.	.01	270.	15.	0.00	100.
6284	1976	PLYM	VOLA	318	24.0	8.	.01	380.	20.	.01	240.	137.	1.90	52.
6285	1976	PLYM	STAW	318	24.0	16.	.01	860.	17.	.01	410.	70.	.17	120.
6286	1976	PLYM	FURY	318	30.0	8.	.01	940.	10.	0.00	460.	12.	.03	210.
6287	1976	PLYM	VOLA	225	24.0	5.	0.00	2000.	10.	0.00	1200.	47.	.70	24.
6288	1976	PLYM	STAW	400	30.0	8.	.03	1000.	8.	.01	920.	40.	.80	70.
6289	1976	PLYM	STAW	225	24.0	12.	.02	1100.	18.	.01	820.	72.	.46	70.
6290	1976	PLYM	STAW	225	24.0	16.	.10	250.	20.	.02	190.	80.	1.50	14.
6291	1976	PONT	SUNB	231	15.0	16.	.01	760.	32.	.48	475.	34.	.80	55.
6292	1976	PONT	BONN	400	30.0	7.	0.00	2150.	7.	0.00	950.	10.	0.00	110.
6293	1976	PONT	GRNP	350	30.0	10.	.01	1425.	10.	0.00	800.	8.	0.00	130.
6294	1976	PONT	LEMA	260	30.0	6.	0.00	1950.	5.	0.00	1350.	5.	0.00	520.
6295	1976	PONT	CATA	455	30.0	12.	.01	950.	15.	.01	210.	150.	1.50	11.
6296	1976	PONT	FIRE	350	24.0	12.	.01	2300.	10.	.04	520.	30.	.24	175.
6297	1976	PONT	GRNP	350	30.0	39.	.55	1250.	12.	.01	1300.	6.	0.00	220.
6298	1976	PONT	VENT	250	24.0	10.	0.00	240.	14.	0.00	600.	73.	.60	40.
6299	1976	CAPR	COUP	171	15.0	32.	.28	600.	20.	.10	120.	15.	.02	42.
6300	1976	DODG	COLT	98	15.0	8.	.02	1600.	5.	.02	420.	0.	.05	55.
6301	1976	DATS	B210	85	15.0	6.	.01	790.	7.	.01	480.	7.	.02	26.
6302	1976	DATS	STAW	119	15.0	40.	.16	1400.	45.	.07	650.	28.	.45	11.
6303	1976	DATS	B210	85	15.0	26.	.06	1050.	56.	.05	1000.	53.	.55	27.
6304	1976	FIAT	128	79	15.0	8.	.05	1000.	30.	.08	210.	50.	.42	35.
6305	1976	FIAT	131	107	15.0	7.	.16	240.	8.	.22	64.	15.	.18	42.
6306	1976	HOND	CIVI	76	15.0	16.	.09	1300.	16.	.28	360.	20.	.18	55.
6307	1976	HOND	ACCO	98	15.0	8.	.02	1625.	8.	.01	750.	17.	.01	75.

APPENDIX K

LISTING OF CLAYTON KEY MODE EMISSION
RESULTS ON INDIVIDUAL VEHICLES

ST. LOUIS

VEHICLE NUMBER	YEAR	MAKE	MODEL	CID	HP	HIGH SPEED HC	HIGH SPEED CO	HIGH SPEED NO	LOW SPEED HC	LOW SPEED CO	LOW SPEED NO	IDLE HC	IDLE CO	IDLE NO
6308	1976	MAZD	RX4	80	15.0	6.	.02	340.	7.	.01	78.	5.	.01	21.
6309	1976	TOYO	CORO	97	15.0	48.	.18	1850.	38.	.32	480.	30.	.22	12.
6310	1976	TOYO	CORO	97	15.0	17.	.02	1950.	15.	.06	820.	10.	.18	32.
6311	1976	TOYO	CELI	133	15.0	4.	0.00	420.	0.	0.00	100.	0.	0.00	35.
6312	1976	TOYO	CORO	97	15.0	18.	.03	1400.	26.	.10	770.	24.	.40	29.
6313	1976	VOLK	RABB	97	15.0	12.	.14	980.	9.	.10	340.	20.	.11	31.
6314	1976	VOLK	RABB	97	15.0	3.	0.00	1880.	6.	0.00	480.	7.	0.00	105.
6315	1976	VOLK	RABB	97	15.0	8.	.01	1275.	7.	0.00	480.	6.	0.00	54.
6316	1976	VOLV	264G	163	24.0	30.	.26	1050.	18.	.10	260.	36.	.28	56.
5052	1975	AMC	GREM	258	15.0	6.	0.00	270.	7.	.01	620.	20.	.32	170.
5053	1975	BUIC	STAW	350	30.0	6.	0.00	220.	8.	0.00	100.	8.	0.00	32.
5054	1975	BUIC	ELEC	455	30.0	10.	.03	660.	10.	.02	110.	47.	.49	58.
5055	1975	CADI	DEVI	500	30.0	15.	.01	600.	12.	0.00	380.	35.	.06	150.
5056	1975	CHEV	MONZ	140	15.0	3.	0.00	740.	3.	0.00	1200.	2.	0.00	72.
5057	1975	CHEV	MONT	350	30.0	8.	0.00	1800.	12.	.15	170.	6.	0.00	92.
5058	1975	CHEV	MALI	350	30.0	53.	0.00	1030.	29.	0.00	250.	17.	0.00	320.
5059	1975	CHEV	STAW	400	30.0	5.	0.00	1000.	7.	0.00	330.	6.	0.00	175.
5060	1975	CHEV	CAMA	250	24.0	0.	0.00	370.	3.	0.00	320.	30.	.18	35.
5061	1975	CHRY	CORD	360	30.0	6.	0.00	350.	5.	0.00	480.	9.	.12	15.
5062	1975	DODG	DART	318	24.0	8.	0.00	420.	10.	0.00	230.	62.	1.15	63.
5063	1975	FORD	PINT	140	15.0	12.	.03	150.	14.	.13	80.	15.	.45	10.
5064	1975	FORD	MAVE	302	24.0	5.	.01	1350.	5.	.01	310.	8.	.03	46.
5065	1975	FORD	LTD	400	30.0	20.	.38	510.	22.	.12	660.	80.	.60	120.
5066	1975	FORD	GRAN	250	24.0	8.	.01	715.	7.	0.00	1025.	8.	0.00	73.
5067	1975	FORD	GRAN	302	24.0	25.	.01	440.	21.	0.00	120.	25.	.01	56.
5068	1975	MERC	MONG	351	30.0	8.	.01	180.	12.	.03	91.	25.	.16	44.
5069	1975	OLDS	CUTL	350	30.0	8.	0.00	420.	6.	0.00	190.	6.	0.00	90.
5070	1975	OLDS	98	455	30.0	15.	.01	990.	45.	0.00	800.	20.	.20	64.
5071	1975	PLYM	VALI	225	24.0	36.	.14	980.	75.	.50	1550.	138.	2.70	44.
5072	1975	PLYM	VALI	318	24.0	132.	1.80	280.	127.	1.50	860.	22.	.01	76.
5073	1975	PONT	CATA	400	30.0	3.	0.00	925.	3.	0.00	975.	3.	.08	52.
5074	1975	PONT	FIRE	350	24.0	6.	.01	680.	10.	0.00	220.	50.	.80	15.
5075	1975	DATS	B210	85	15.0	30.	.04	920.	48.	.03	1000.	90.	.60	48.
5076	1975	TOYO	CELI	133	15.0	10.	.01	2100.	10.	.10	660.	10.	.14	20.
5077	1975	TOYO	CORO	97	15.0	15.	.20	710.	15.	.27	250.	13.	.07	38.
5078	1975	VOLK	SCIR	90	15.0	10.	0.00	220.	8.	0.00	120.	5.	0.00	54.
5317	1975	AMC	MATA	304	24.0	7.	0.00	1050.	7.	0.00	980.	5.	0.00	54.
5318	1975	BUIC	SKYH	231	24.0	15.	0.00	740.	48.	.55	105.	60.	1.35	17.
5320	1975	CHEV	MONZ	140	15.0	20.	.02	1800.	10.	.01	980.	40.	.70	65.
5321	1975	CHEV	IMPA	350	30.0	3.	0.00	1250.	4.	0.00	175.	3.	0.00	97.
5322	1975	CHEV	STAW	350	30.0	14.	.01	2000.	22.	.10	380.	74.	1.20	92.
5323	1975	CHEV	CAMA	350	24.0	6.	0.00	1225.	5.	0.00	215.	4.	0.00	125.
5324	1975	CHEV	IMPA	400	30.0	11.	0.00	1750.	14.	0.00	1050.	26.	.08	21.
5325	1975	DODG	DART	318	24.0	5.	0.00	380.	5.	.01	170.	15.	.27	74.
5326	1975	FORD	MUST	140	15.0	45.	.04	490.	40.	.20	250.	50.	1.20	22.
5327	1975	FORD	LTD	400	30.0	5.	.01	1200.	5.	.01	175.	5.	.03	140.
5328	1975	FORD	LTD	351	30.0	9.	.05	920.	8.	.02	440.	15.	.02	150.
5329	1975	LINC	MRK4	460	30.0	64.	2.40	58.	38.	2.20	36.	38.	.29	82.
5330	1975	MERC	COUG	351	30.0	28.	.02	930.	26.	.02	340.	30.	.01	110.
5331	1975	OLDS	CUTL	260	30.0	13.	.02	590.	15.	0.00	420.	12.	0.00	80.

APPENDIX K

LISTING OF CLAYTON KEY MODE EMISSION
RESULTS ON INDIVIDUAL VEHICLES

ST. LOUIS

VEHICLE NUMBER	YEAR	MAKE	MODEL	CID	HP	HIGH SPEED HC	HIGH SPEED CO	HIGH SPEED NO	LOW SPEED HC	LOW SPEED CO	LOW SPEED NO	IDLE HC	IDLE CO	IDLE NO
5332	1975	OLDS	CUTL	350	30.0	0.	0.00	640.	0.	0.00	220.	0.	0.00	43.
5333	1975	PLYM	FURY	318	24.0	7.	.01	1750.	10.	.01	960.	14.	.31	71.
5334	1975	PONT	GRNP	400	30.0	30.	.65	720.	42.	.45	320.	78.	1.20	57.
5335	1975	DATS	710	119	15.0	8.	.07	1350.	11.	.04	920.	7.	.06	42.
5336	1975	FIAT	131	107	15.0	4.	.03	480.	5.	.03	160.	6.	.13	42.
5337	1975	HOND	CVCC	91	15.0	10.	.03	980.	7.	.01	440.	15.	.05	120.
5338	1975	MAZD	STAW	70	15.0	8.	0.00	490.	7.	0.00	125.	6.	0.00	26.
4080	1974	AMC	AMBA	360	30.0	1575.	.16	1800.	1000.	.18	1100.	1175.	2.00	80.
4081	1974	BUIC	CNTY	350	30.0	15.	.01	1850.	16.	.04	830.	17.	.22	61.
4082	1974	CADI	DEVI	472	30.0	24.	.12	230.	27.	.17	110.	30.	.33	30.
4083	1974	CHEV	VEGA	140	15.0	93.	.11	1475.	145.	.45	1075.	240.	.75	510.
4084	1974	CHEV	CHEL	350	24.0	115.	.10	650.	138.	.90	100.	190.	.47	42.
4085	1974	CHEV	NOVA	250	24.0	1100.	.10	850.	190.	.25	255.	315.	4.80	63.
4086	1974	CHEV	NOVA	350	24.0	110.	.13	740.	135.	1.10	98.	153.	2.50	43.
4087	1974	CHEV	CHEL	350	30.0	2200.	.28	920.	220.	.09	220.	100.	.60	125.
4088	1974	CHEV	STAW	400	30.0	45.	.68	260.	54.	.60	85.	95.	2.30	19.
4089	1974	CHRY	NEWP	400	30.0	63.	.67	1150.	45.	.07	475.	103.	2.45	44.
4090	1974	DODG	CHAR	318	24.0	22.	.03	1750.	40.	.32	830.	38.	.55	61.
4091	1974	FORD	PINT	122	15.0	45.	.06	560.	52.	.10	130.	60.	1.80	28.
4092	1974	FORD	TORI	302	24.0	76.	.05	850.	60.	.06	210.	120.	1.10	16.
4093	1974	FORD	PINT	140	15.0	7.	.01	1700.	13.	.09	490.	22.	.60	23.
4094	1974	FORD	STAW	400	30.0	30.	.05	400.	40.	.07	370.	90.	1.35	47.
4095	1974	FORD	STAW	351	30.0	125.	3.10	2400.	103.	.17	970.	420.	5.00	31.
4096	1974	MERC	MONT	302	30.0	80.	.09	3600.	100.	.05	1500.	250.	1.60	10.
4097	1974	OLDS	CUTL	350	30.0	100.	.13	1800.	140.	.12	1500.	775.	1.30	100.
4098	1974	OLDS	STAW	455	30.0	30.	.10	1050.	55.	.09	480.	107.	.34	80.
4099	1974	PLYM	SCAM	318	24.0	125.	.25	3600.	190.	.60	1700.	210.	4.00	77.
4100	1974	PLYM	DUST	225	24.0	45.	.06	810.	56.	.04	1200.	80.	.08	92.
4101	1974	PONT	GRNP	400	30.0	15.	.04	200.	33.	.05	66.	60.	.02	78.
4102	1974	DATS	710	119	15.0	10.	.04	1250.	11.	.06	850.	20.	.22	69.
4103	1974	TOYO	CORO	97	15.0	45.	.25	980.	43.	.39	260.	78.	1.20	35.
4104	1974	TOYO	STAW	120	15.0	62.	.03	460.	80.	.22	245.	210.	2.80	8.
4105	1974	VOLK	SEDA	97	15.0	120.	.25	2225.	153.	.05	1125.	205.	4.70	71.
4106	1974	VOLK	SEDA	97	15.0	77.	.12	1975.	108.	.07	800.	145.	.82	49.
4339	1974	AMC	HORN	258	24.0	85.	.39	2500.	190.	2.25	1175.	200.	3.90	120.
4340	1974	BUIC	REGA	350	30.0	20.	.10	640.	36.	.36	290.	40.	.75	22.
4341	1974	BUIC	RIVI	455	30.0	32.	.08	3200.	47.	.08	720.	110.	1.30	26.
4342	1974	CHEV	CHEL	350	24.0	50.	.28	460.	63.	.40	120.	90.	.23	80.
4343	1974	CHEV	MONT	350	30.0	155.	1.15	1850.	125.	.10	625.	195.	.25	100.
4344	1974	CHEV	CHEL	350	24.0	90.	.20	1100.	180.	2.50	158.	245.	3.95	62.
4345	1974	CHEV	STAW	400	30.0	60.	.15	1350.	90.	.15	1050.	185.	3.00	52.
4346	1974	CHEV	VEGA	140	15.0	55.	.06	420.	62.	.27	93.	128.	1.55	112.
4347	1974	DODG	DART	225	24.0	1500.	.48	3800.	205.	.52	2650.	345.	4.25	135.
4348	1974	DODG	DART	318	24.0	170.	.18	2150.	320.	.50	2050.	280.	3.90	53.
4349	1974	FORD	TORI	351	24.0	200.	.65	810.	160.	.60	710.	183.	1.90	100.
4350	1974	FORD	GALA	400	30.0	110.	.17	1975.	80.	.15	680.	260.	5.60	60.
4351	1974	FORD	LTD	400	30.0	900.	.10	3100.	650.	.10	650.	850.	5.50	56.
4352	1974	FORD	MUST	140	15.0	152.	.28	1575.	228.	3.30	195.	285.	5.05	68.
4353	1974	LINC	MRK4	460	30.0	100.	2.20	500.	60.	1.70	150.	45.	1.00	80.
4354	1974	MERC	MONG	351	30.0	210.	.90	1380.	155.	.30	630.	240.	.57	96.

APPENDIX K

LISTING OF CLAYTON KEY MODE EMISSION
RESULTS ON INDIVIDUAL VEHICLES

ST. LOUIS

VEHICLE NUMBER	YEAR	MAKE	MODEL	CID	HP	HIGH SPEED HC	HIGH SPEED CO	HIGH SPEED NO	LOW SPEED HC	LOW SPEED CO	LOW SPEED NO	IDLE HC	IDLE CO	IDLE NO
4355	1974	OLDS	CUTL	350	30.0	225.	4.75	440.	280.	5.20	150.	210.	4.50	63.
4356	1974	PLYM	FRY3	360	30.0	135.	1.60	1825.	175.	.75	2450.	200.	5.80	59.
4357	1974	PONT	BONN	400	30.0	130.	.26	850.	220.	1.80	400.	520.	8.20	7.
4358	1974	PONT	LEMA	350	30.0	130.	.17	3600.	172.	.25	2250.	395.	5.40	56.
4359	1974	CAPR	SPOR	122	15.0	14.	.03	1350.	26.	.03	540.	32.	.42	65.
4360	1974	DATS	B210	79	15.0	85.	.17	1000.	120.	.37	790.	220.	2.30	62.
4361	1974	MAZD	STAW	70	24.0	9.	.08	950.	15.	0.00	62.	10.	0.00	28.
3107	1973	AMC	GREM	232	15.0	37.	.07	550.	60.	.06	300.	490.	4.10	48.
3108	1973	BUIC	CNTR	455	30.0	55.	.14	1200.	72.	.15	610.	105.	.35	96.
3109	1973	BUIC	CNTY	350	24.0	56.	.10	480.	53.	.17	135.	120.	3.50	34.
3110	1973	CADI	DEVI	472	30.0	25.	.05	320.	25.	.07	180.	42.	.60	36.
3111	1973	CHEV	VEGA	140	15.0	33.	.05	695.	17.	.07	100.	54.	1.35	22.
3112	1973	CHEV	MONT	350	24.0	42.	.10	790.	56.	.45	240.	100.	1.80	40.
3113	1973	CHEV	CAMA	350	24.0	64.	.28	2300.	128.	1.55	760.	135.	3.50	60.
3114	1973	CHEV	IMPA	350	30.0	23.	.07	1350.	34.	.15	490.	55.	.12	51.
3115	1973	CHEV	IMPA	350	30.0	55.	.21	1425.	75.	.20	455.	100.	1.85	51.
3116	1973	DODG	DART	225	24.0	70.	.22	4600.	72.	.08	2000.	85.	.05	85.
3117	1973	FORD	PINT	122	15.0	5.	.01	720.	14.	.13	600.	23.	.55	30.
3118	1973	FORD	TORI	351	24.0	155.	.95	1350.	115.	.65	350.	295.	5.40	49.
3119	1973	FORD	MUST	302	24.0	160.	.80	1700.	110.	.70	520.	305.	4.90	90.
3120	1973	FORD	TORI	351	24.0	135.	.31	2250.	90.	.23	390.	145.	.37	70.
3121	1973	FORD	STAW	400	30.0	100.	.18	4000.	77.	.21	950.	155.	3.20	135.
3122	1973	MERC	MONG	400	24.0	25.	.08	980.	43.	.08	480.	180.	4.90	66.
3123	1973	OLDS	TORO	455	30.0	22.	.04	1050.	36.	.06	300.	35.	.11	28.
3124	1973	OLDS	CUTL	350	24.0	45.	.10	580.	67.	.18	470.	210.	4.50	55.
3125	1973	PLYM	SATE	318	24.0	117.	.14	1900.	175.	.13	1500.	163.	2.50	60.
3126	1973	PLYM	VALI	318	24.0	65.	.19	1800.	50.	.14	1350.	96.	1.30	62.
3127	1973	PONT	GRNV	400	30.0	63.	.08	1800.	94.	.08	1100.	180.	1.70	38.
3128	1973	PONT	LEMA	350	30.0	77.	.12	4400.	117.	.13	2350.	200.	.06	420.
3129	1973	DATS	STAW	97	15.0	47.	.21	790.	95.	.60	265.	182.	2.95	210.
3130	1973	OPEL	STAW	116	15.0	56.	.90	1325.	66.	1.40	210.	32.	.85	44.
3131	1973	TOYO	CARI	97	15.0	62.	.40	750.	59.	.71	165.	138.	1.89	27.
3132	1973	VOLK	SEDA	103	15.0	25.	.04	2100.	30.	.08	980.	45.	.45	65.
3133	1973	VOLK	SEDA	97	15.0	122.	.44	3050.	154.	.33	1325.	170.	3.95	75.
3362	1973	BUIC	CNTY	350	24.0	64.	.15	880.	105.	.35	340.	95.	2.20	52.
3363	1973	BUIC	RIVE	455	30.0	38.	.07	675.	55.	.08	275.	70.	.30	78.
3364	1973	CHEV	STAW	400	30.0	130.	1.50	1725.	110.	.07	1100.	350.	8.20	60.
3365	1973	CHEV	VEGA	140	15.0	165.	.22	2225.	275.	2.10	1450.	275.	3.20	160.
3366	1973	CHEV	NOVA	250	24.0	88.	.77	1875.	102.	.63	610.	101.	.17	78.
3367	1973	CHEV	IMPA	350	30.0	90.	.49	2250.	180.	.75	1000.	140.	1.80	50.
3368	1973	CHEV	CAMA	307	24.0	27.	.15	630.	41.	.21	230.	35.	.75	14.
3369	1973	CHEV	STAW	454	30.0	90.	1.35	1075.	90.	1.05	390.	580.	3.15	50.
3370	1973	CHRY	NEWP	400	30.0	118.	.75	1875.	162.	.17	2350.	245.	4.65	59.
3371	1973	DODG	CHAR	318	24.0	190.	.55	1825.	250.	.23	2350.	165.	2.20	62.
3372	1973	DODG	STAW	360	30.0	48.	.46	2300.	52.	.24	1950.	98.	1.90	44.
3373	1973	FORD	PINT	122	15.0	105.	.72	1225.	179.	2.80	130.	295.	4.95	25.
3374	1973	FORD	TORI	351	24.0	135.	.15	2450.	110.	.19	310.	160.	.70	75.
3375	1973	FORD	STAW	400	30.0	23.	.06	745.	27.	.04	330.	53.	.47	12.
3376	1973	FORD	STAW	400	30.0	95.	.06	3500.	40.	.02	1550.	45.	.06	98.
3377	1973	MERC	MONG	302	24.0	95.	.23	1575.	50.	.14	480.	160.	.30	160.

APPENDIX K

LISTING OF CLAYTON KEY MODE EMISSION
RESULTS ON INDIVIDUAL VEHICLES

ST. LOUIS

VEHICLE NUMBER	YEAR	MAKE	MODEL	CID	HP	HIGH SPEED HC	HIGH SPEED CO	HIGH SPEED NO	LOW SPEED HC	LOW SPEED CO	LOW SPEED NO	IDLE HC	IDLE CO	IDLE NO
3378	1973	OLDS	DELT	350	30.0	70.	.14	1700.	81.	.25	760.	98.	.19	75.
3379	1973	OLDS	NNTY	455	30.0	31.	.10	1200.	38.	.11	630.	76.	.23	160.
3380	1973	PLYM	FRY3	360	30.0	110.	.32	2950.	135.	.09	3200.	265.	5.10	47.
3381	1973	PONT	VENT	350	24.0	128.	.10	3787.	155.	.25	1450.	225.	4.20	56.
3382	1973	PONT	GRNV	455	30.0	75.	.13	1663.	108.	.19	763.	107.	.07	43.
3383	1973	MERC	CAPR	122	15.0	82.	.13	1450.	138.	.40	375.	125.	1.10	33.
3384	1973	MAZD	RX3	70	15.0	60.	.40	460.	125.	.85	85.	56.	.04	40.
2134	1972	AMC	MATA	258	24.0	18.	.03	940.	38.	.12	440.	62.	.70	25.
2135	1972	BUIC	ELEC	455	30.0	44.	.05	1775.	58.	.05	1125.	53.	.80	31.
2136	1972	CADI	CALA	472	30.0	34.	.13	2000.	60.	.45	1000.	82.	1.00	47.
2137	1972	CHEV	VEGA	140	15.0	85.	.10	1250.	132.	.05	1125.	145.	.25	62.
2138	1972	CHEV	STAW	350	30.0	1500.	.70	2850.	245.	1.30	1625.	295.	4.15	80.
2139	1972	CHEV	CHEL	350	24.0	31.	.14	530.	29.	.12	175.	107.	1.95	70.
2140	1972	CHEV	CHEL	307	24.0	145.	.16	2750.	280.	.60	1325.	400.	3.95	65.
2141	1972	CHEV	STAW	350	30.0	160.	.80	2350.	240.	1.55	1250.	250.	3.40	69.
2142	1972	CHEV	CAPR	400	30.0	120.	.16	2700.	140.	.15	2025.	290.	4.30	84.
2143	1972	DODG	CHAR	318	24.0	54.	.12	815.	72.	.08	430.	42.	.13	33.
2144	1972	FORD	PINT	122	15.0	50.	.13	1450.	620.	.09	700.	220.	1.75	26.
2145	1972	FORD	TORI	351	24.0	210.	.22	2950.	135.	.13	765.	200.	5.20	75.
2146	1972	FORD	MAVE	200	15.0	68.	.04	1875.	86.	.07	810.	125.	1.87	40.
2147	1972	FORD	STAW	400	30.0	45.	.12	1700.	60.	.13	1025.	180.	4.10	99.
2148	1972	FORD	LTD	400	30.0	115.	.60	3000.	100.	.20	1300.	150.	3.80	80.
2149	1972	MERC	MONR	400	30.0	67.	.14	2900.	57.	.07	1350.	115.	.17	500.
2150	1972	OLDS	CUTL	350	24.0	35.	.05	820.	55.	.12	370.	70.	.20	67.
2151	1972	PLYM	DUST	225	15.0	140.	2.00	2400.	165.	.85	1500.	265.	3.60	95.
2152	1972	PLYM	FRY3	360	30.0	140.	1.40	2450.	250.	1.25	1975.	550.	8.30	23.
2153	1972	PONT	GRNV	400	30.0	62.	.08	2150.	87.	.08	1125.	137.	1.70	53.
2154	1972	PONT	FIRE	350	24.0	145.	.20	2213.	145.	.43	742.	175.	2.08	100.
2155	1972	DATS	510	97	15.0	55.	.06	1450.	80.	.07	810.	98.	2.15	14.
2156	1972	TOYO	CELI	120	15.0	125.	.95	3000.	225.	3.45	530.	790.	5.70	30.
2157	1972	VOLK	SEDA	97	15.0	105.	.43	1975.	220.	2.40	510.	345.	5.50	43.
2158	1972	VOLK	SEDA	97	15.0	24.	.16	2800.	25.	.26	780.	40.	.60	41.
2385	1972	BUIC	STAW	350	30.0	32.	.16	785.	38.	.26	430.	71.	.57	59.
2386	1972	BUIC	LESA	350	30.0	48.	.18	2800.	160.	.75	1950.	240.	2.80	80.
2387	1972	CHEV	VEGA	140	15.0	200.	1.50	2400.	250.	.70	2250.	350.	5.00	60.
2388	1972	CHEV	NOVA	250	24.0	650.	.10	2700.	124.	.20	1500.	143.	1.60	125.
2389	1972	CHEV	MALI	350	24.0	115.	.25	2325.	155.	.15	1075.	170.	1.65	113.
2390	1972	CHEV	IMPA	350	30.0	98.	.62	2350.	161.	.60	2300.	197.	1.10	250.
2391	1972	CHEV	IMPA	400	30.0	110.	1.55	1250.	85.	.25	680.	185.	3.70	95.
2392	1972	CHRY	NEWP	400	30.0	47.	.70	900.	105.	1.30	360.	190.	3.20	17.
2393	1972	DODG	DEMO	225	15.0	47.	.14	1025.	73.	.26	430.	120.	2.90	18.
2394	1972	FORD	PINT	122	15.0	125.	.25	800.	200.	1.10	92.	240.	3.60	76.
2395	1972	FORD	TORI	302	24.0	80.	.42	1300.	62.	.14	430.	275.	4.30	42.
2396	1972	FORD	MUST	351	24.0	320.	.50	2450.	240.	.85	390.	260.	7.00	69.
2397	1972	FORD	GALA	429	30.0	65.	.18	3800.	102.	.12	2300.	85.	.08	120.
2398	1972	LINC	MRK4	460	30.0	37.	.16	820.	28.	.06	330.	78.	1.17	43.
2399	1972	MERC	MONG	302	24.0	73.	.07	1175.	42.	.08	215.	105.	1.55	43.
2400	1972	OLDS	CUTL	350	24.0	77.	.10	2600.	130.	.19	1500.	138.	1.50	75.
2401	1972	OLDS	STAW	455	30.0	400.	.10	2300.	76.	.10	1450.	90.	1.20	63.
2402	1972	PLYM	SATE	318	24.0	97.	.13	2500.	180.	.17	1700.	155.	3.80	75.

APPENDIX K

LISTING OF CLAYTON KEY MODE EMISSION
RESULTS ON INDIVIDUAL VEHICLES

ST. LOUIS

VEHICLE NUMBER	YEAR	MAKE	MODEL	CID	HP	HIGH SPEED HC	HIGH SPEED CO	HIGH SPEED NO	LOW SPEED HC	LOW SPEED CO	LOW SPEED NO	IDLE HC	IDLE CO	IDLE NO
2403	1972	PONT	STAW	400	30.0	66.	.13	1975.	165.	.20	1775.	650.	5.85	34.
2404	1972	CAPR	COUP	122	15.0	88.	.23	2125.	170.	1.95	520.	285.	6.10	30.
1159	1971	BUIC	RIVE	455	30.0	20.	.05	500.	30.	.06	280.	118.	2.30	22.
1160	1971	BUIC	SKYL	350	24.0	90.	.04	380.	165.	.04	240.	380.	1.30	45.
1161	1971	CHEV	VEGA	140	15.0	190.	1.30	2250.	200.	.18	2125.	300.	4.10	225.
1162	1971	CHEV	CHEL	350	24.0	160.	.45	2100.	220.	.40	1275.	460.	4.60	100.
1163	1971	CHEV	NOVA	250	24.0	15.	.06	280.	18.	.05	82.	62.	.07	45.
1164	1971	CHEV	IMPA	350	30.0	50.	.13	1550.	65.	.29	815.	205.	2.30	95.
1165	1971	CHEV	IMPA	350	30.0	6.	.01	2200.	6.	.02	1000.	6.	.02	60.
1166	1971	CHRY	NEWP	383	30.0	45.	.40	2600.	50.	.10	2100.	75.	1.50	60.
1167	1971	DODG	CHAR	318	24.0	232.	.36	2620.	500.	.15	2050.	1810.	1.25	86.
1168	1971	FORD	PINT	122	15.0	100.	.13	2500.	182.	.65	1500.	97.	.42	100.
1169	1971	FORD	TORI	302	24.0	80.	.09	2400.	64.	.06	550.	88.	1.35	180.
1170	1971	FORD	MAVE	200	15.0	170.	.13	3800.	210.	.80	1250.	180.	3.30	125.
1171	1971	FORD	GALA	351	30.0	115.	.49	3300.	140.	.18	2800.	215.	3.65	66.
1172	1971	FORD	STAW	400	30.0	58.	.13	1450.	87.	.15	865.	155.	.60	125.
1173	1971	MERC	COUG	351	24.0	170.	.20	2900.	165.	.13	840.	310.	4.50	60.
1174	1971	OLDS	CUTL	350	24.0	140.	.11	3500.	135.	.11	1550.	160.	3.10	80.
1175	1971	PLYM	DUST	225	24.0	17.	.24	2300.	15.	.03	2150.	15.	.21	190.
1176	1971	PONT	CATA	350	30.0	92.	.15	3600.	120.	.22	1650.	250.	4.10	87.
1177	1971	PONT	LEMA	350	24.0	157.	.25	2450.	215.	1.25	720.	240.	2.80	98.
1178	1971	DATS	B110	97	15.0	1600.	2.60	220.	2000.	4.00	64.	2000.	3.30	32.
1179	1971	TOYO	CORO	71	15.0	109.	.07	4700.	143.	1.85	960.	340.	5.30	47.
1180	1971	VOLK	SEDA	97	15.0	148.	.50	2600.	192.	.21	1175.	305.	3.60	65.
1405	1971	AMC	MATA	360	24.0	175.	.21	2600.	125.	.17	500.	127.	.55	120.
1406	1971	BUIC	ELEC	455	30.0	65.	.06	530.	50.	.05	445.	187.	2.20	16.
1407	1971	CADI	DEVI	472	30.0	35.	.22	1825.	70.	1.00	700.	90.	2.05	40.
1408	1971	CHEV	MONT	350	24.0	50.	.24	1450.	62.	.11	500.	280.	5.30	60.
1409	1971	CHEV	CHEL	307	24.0	130.	.25	2700.	210.	.17	1525.	625.	3.60	85.
1410	1971	CHEV	CHEL	350	24.0	85.	.29	1375.	60.	.10	245.	192.	1.05	110.
1411	1971	CHEV	IMPA	350	30.0	85.	.13	2725.	140.	.85	1375.	470.	5.95	23.
1412	1971	DODG	DART	225	24.0	1600.	2.70	2050.	290.	2.15	1425.	930.	8.25	10.
1413	1971	FORD	MUST	302	24.0	245.	.10	980.	450.	.07	455.	205.	2.50	25.
1414	1971	FORD	TORI	351	24.0	140.	.40	1750.	125.	.15	490.	110.	1.60	10.
1415	1971	FORD	LTD	351	30.0	1810.	.50	2350.	1710.	.30	1050.	2000.	3.30	65.
1416	1971	MERC	MONR	400	30.0	53.	.13	2600.	360.	.14	2300.	680.	4.80	70.
1417	1971	OLDS	CUTL	350	24.0	97.	.12	2475.	122.	.10	970.	98.	1.25	92.
1418	1971	OLDS	CUTL	350	24.0	355.	.63	2500.	257.	.70	530.	180.	2.55	100.
1419	1971	PLYM	DUST	318	24.0	180.	.80	1900.	360.	3.50	195.	385.	6.20	35.
1420	1971	PLYM	STAW	360	30.0	170.	4.30	260.	320.	4.40	140.	195.	3.60	41.
1421	1971	PONT	CATA	350	30.0	110.	.15	2625.	150.	.20	1200.	110.	.18	79.
1422	1971	VOLK	SEDA	97	15.0	40.	.80	350.	100.	1.25	100.	210.	3.20	10.
0181	1970	AMC	JAVE	232	24.0	253.	.18	2900.	290.	1.15	900.	340.	2.60	74.
0182	1970	BUIC	LESA	455	30.0	115.	.15	2225.	95.	.10	1250.	350.	.20	53.
0183	1970	CHEV	NOVA	250	24.0	0.	0.00	710.	0.	0.00	82.	0.	0.00	22.
0184	1970	CHEV	CHEL	307	24.0	270.	1.15	2050.	370.	1.75	240.	1410.	8.22	8.
0185	1970	CHEV	CHEL	350	24.0	63.	.35	720.	47.	.12	300.	110.	2.20	40.
0186	1970	CHEV	IMPA	350	30.0	155.	.40	4100.	280.	4.20	1050.	420.	4.90	85.
0187	1970	CHEV	IMPA	350	30.0	195.	1.50	1850.	170.	.65	1000.	245.	2.20	100.
0188	1970	DODG	CORO	225	24.0	40.	.70	2000.	100.	.70	1300.	135.	2.35	36.

APPENDIX K

LISTING OF CLAYTON KEY MODE EMISSION
RESULTS ON INDIVIDUAL VEHICLES

ST. LOUIS

VEHICLE NUMBER	YEAR	MAKE	MODEL	CID	HP	HIGH SPEED HC	HIGH SPEED CO	HIGH SPEED NO	LOW SPEED HC	LOW SPEED CO	LOW SPEED NO	IDLE HC	IDLE CO	IDLE NO
0189	1970	FORD	MUST	302	24.0	85.	.13	1600.	70.	.09	340.	240.	3.50	100.
0190	1970	FORD	STAW	302	24.0	220.	.75	2850.	230.	1.20	710.	345.	5.65	40.
0191	1970	FORD	LTD	351	24.0	230.	.20	2700.	440.	.17	1500.	1225.	2.10	120.
0192	1970	FORD	LTD	351	24.0	45.	.05	1025.	45.	.04	280.	30.	.18	20.
0193	1970	MERC	MARQ	390	30.0	51.	.21	1850.	52.	.21	1800.	45.	.58	110.
0194	1970	OLDS	STAW	350	30.0	52.	.32	600.	65.	.34	400.	110.	2.60	16.
0195	1970	PLYM	STAW	383	30.0	40.	.20	1300.	37.	.05	720.	43.	.19	31.
0196	1970	PLYM	DUST	318	15.0	65.	1.00	650.	60.	.70	220.	100.	2.30	19.
0197	1970	PONT	LEMA	350	24.0	40.	.11	630.	60.	.12	270.	170.	2.70	24.
0198	1970	DATS	510	97	15.0	121.	.06	2600.	142.	.25	745.	178.	1.30	9.
0200	1970	VOLK	SEDA	97	15.0	57.	.25	1325.	71.	.41	600.	100.	3.70	13.
0423	1970	BUIC	SKYL	350	24.0	150.	.65	2900.	275.	3.40	580.	375.	8.00	40.
0424	1970	BUIC	SKYL	350	24.0	60.	.30	1150.	220.	3.40	190.	825.	6.70	23.
0425	1970	CADI	DEVI	472	30.0	55.	.05	1250.	36.	.18	580.	50.	.49	50.
0426	1970	CHEV	CAMA	307	24.0	26.	.08	2200.	30.	.03	2100.	50.	.48	80.
0427	1970	CHEV	STAW	350	30.0	53.	.12	1125.	71.	.25	660.	132.	2.30	16.
0428	1970	CHEV	IMPA	400	30.0	180.	.60	3100.	150.	.10	2375.	225.	2.70	105.
0429	1970	CHRY	STAW	383	30.0	125.	.25	3000.	122.	.14	1025.	125.	1.67	115.
0430	1970	DODG	CHAR	318	24.0	305.	5.80	535.	365.	4.80	710.	218.	2.15	335.
0431	1970	FORD	MAVE	200	15.0	70.	.06	830.	78.	.05	345.	70.	.41	87.
0432	1970	FORD	GALA	351	24.0	10.	.02	1400.	10.	.01	490.	26.	.50	83.
0433	1970	FORD	LTD	390	30.0	305.	.50	3000.	330.	.75	2025.	425.	3.90	96.
0434	1970	OLDS	DELT	350	30.0	108.	.22	1750.	130.	.50	750.	180.	2.00	74.
0435	1970	PLYM	SATE	318	24.0	305.	1.78	2150.	375.	1.26	1125.	475.	6.75	48.
0436	1970	PONT	GRNP	400	24.0	1850.	.17	3000.	275.	.83	1050.	450.	.15	95.
0437	1970	VOLK	SEDA	97	15.0	105.	.95	2050.	155.	1.10	660.	220.	5.10	45.
9438	1969	AMC	RAMB	199	15.0	28.	.12	1700.	42.	.43	190.	29.	.49	61.
9439	1969	BUIC	WILD	430	30.0	165.	.11	3850.	205.	.82	1875.	460.	6.00	42.
9440	1969	BUIC	SPEC	350	24.0	175.	.40	2900.	275.	1.30	1000.	550.	5.80	20.
9441	1969	CADI	DEVI	472	30.0	58.	.17	1300.	63.	.78	510.	95.	.35	98.
9442	1969	CHEV	NOVA	307	24.0	190.	1.60	2250.	185.	.21	1775.	285.	4.30	73.
9443	1969	CHEV	IMPA	350	24.0	135.	.13	4100.	195.	.25	2000.	280.	4.50	35.
9444	1969	CHEV	CAMA	307	24.0	125.	.95	1550.	160.	1.10	580.	95.	2.20	25.
9445	1969	CHEV	IMPA	327	24.0	250.	.70	1275.	225.	.40	410.	410.	6.35	60.
9446	1969	CHEV	ELCA	350	24.0	210.	1.76	1950.	320.	2.70	650.	490.	5.60	23.
9447	1969	CHEV	NOVA	250	24.0	93.	.07	1975.	126.	.07	960.	52.	.73	34.
9448	1969	CHEV	BELA	350	24.0	120.	.80	1200.	170.	2.43	185.	81.	.41	89.
9449	1969	CHRY	NEWP	383	30.0	82.	1.30	1500.	52.	.12	540.	138.	.60	75.
9450	1969	DODG	POLA	318	24.0	87.	1.30	445.	105.	1.05	430.	55.	.09	57.
9451	1969	FORD	LTD	390	24.0	27.	.03	1250.	12.	.01	600.	20.	.20	75.
9452	1969	FORD	FALC	302	24.0	3100.	.16	3550.	330.	.18	1950.	275.	.03	102.
9453	1969	FORD	GALA	351	24.0	110.	.31	1650.	65.	.12	680.	273.	4.30	80.
9454	1969	FORD	LTD	390	24.0	151.	.44	1350.	115.	.27	493.	205.	.75	145.
9455	1969	FORD	FAIR	302	24.0	220.	.13	4300.	245.	.13	2450.	295.	3.10	105.
9456	1969	FORD	THUN	429	30.0	1630.	.45	3400.	170.	.18	2000.	151.	.12	175.
9457	1969	MERC	MONG	351	24.0	16.	.06	860.	12.	.03	175.	76.	1.70	40.
9458	1969	OLDS	98	455	30.0	27.	.04	550.	33.	.08	220.	55.	.27	20.
9459	1969	OLDS	CUTL	350	24.0	130.	.20	2200.	155.	.40	1075.	142.	.34	210.
9460	1969	PLYM	SATE	318	24.0	85.	.44	2600.	125.	.82	1100.	165.	2.25	98.
9461	1969	PLYM	VALI	225	15.0	2000.	1.20	2000.	2000.	4.50	170.	2000.	4.90	35.

APPENDIX K

LISTING OF CLAYTON KEY MODE EMISSION
RESULTS ON INDIVIDUAL VEHICLES

ST. LOUIS

VEHICLE NUMBER	YEAR	MAKE	MODEL	CID	HP	HIGH SPEED HC	HIGH SPEED CO	HIGH SPEED NO	LOW SPEED HC	LOW SPEED CO	LOW SPEED NO	IDLE HC	IDLE CO	IDLE NO
9462	1969	PONT	LEMA	350	24.0	63.	.11	1325.	77.	.60	340.	85.	1.55	36.
9463	1969	PONT	CATA	400	30.0	62.	.73	765.	95.	1.20	410.	84.	1.20	42.
9464	1969	PONT	STAW	400	30.0	45.	.06	1900.	55.	.15	920.	150.	1.80	50.
9465	1969	TOYO	CORO	116	15.0	25.	.12	1050.	33.	.45	380.	25.	.36	12.
9466	1969	VOLK	SEDA	91	15.0	97.	.30	1550.	165.	.34	960.	238.	2.60	51.
9467	1969	VOLK	SEDA	91	15.0	920.	2.25	2225.	1040.	2.10	1750.	1125.	5.90	44.
8468	1966	AMC	STAW	199	15.0	172.	.10	3100.	230.	.11	1350.	360.	4.80	85.
8469	1968	AMC	RAMB	232	15.0	40.	.26	1200.	65.	.26	720.	65.	1.10	56.
8470	1967	AMC	REBE	290	24.0	305.	4.20	960.	260.	1.20	1600.	220.	2.60	70.
8471	1968	BUIC	WILD	430	30.0	460.	.10	1150.	470.	.10	850.	520.	.80	45.
8472	1968	BUIC	ELEC	430	30.0	25.	.03	4400.	45.	.20	1750.	80.	.80	58.
8473	1968	BUIC	LESA	350	30.0	1350.	.20	3300.	225.	1.00	1750.	270.	3.80	82.
8474	1966	CADI	DEVI	429	30.0	4600.	5.60	470.	450.	5.10	255.	595.	7.55	36.
8475	1968	CHEV	CHEL	230	24.0	105.	.13	3350.	198.	.12	2950.	220.	.70	340.
8476	1967	CHEV	CHEL	283	24.0	2000.	2.70	1200.	2000.	4.30	250.	2000.	5.50	25.
8477	1967	CHEV	IMPA	283	24.0	316.	1.85	2025.	420.	3.10	760.	615.	6.45	56.
8478	1968	CHEV	IMPA	327	24.0	390.	2.10	1275.	800.	3.40	345.	1325.	7.50	37.
8479	1966	CHEV	IMPA	327	24.0	185.	.27	420.	170.	.24	250.	190.	.23	150.
8480	1968	CHEV	IMPA	396	24.0	255.	4.80	230.	305.	5.00	110.	380.	5.30	50.
8481	1966	CHEV	CHEL	283	24.0	245.	1.38	2650.	530.	3.30	890.	875.	5.70	37.
8482	1967	CHEV	CAMA	250	15.0	180.	1.30	1950.	290.	1.80	620.	800.	6.30	15.
8483	1968	CHEV	CHEL	307	24.0	240.	.22	4200.	325.	.31	2850.	1000.	4.90	96.
8484	1968	CHEV	CHEL	318	24.0	260.	3.40	690.	240.	1.35	590.	690.	5.50	58.
8485	1968	CHEV	IMPA	327	24.0	190.	1.20	1450.	290.	2.85	345.	430.	6.10	53.
8486	1968	CHEV	IMPA	302	24.0	205.	.65	3100.	285.	.25	2550.	200.	4.95	41.
8487	1968	CHRY	NEWP	383	30.0	120.	1.35	2300.	137.	.46	1800.	130.	2.40	95.
8488	1967	DODG	DART	225	15.0	420.	4.35	640.	540.	5.40	163.	500.	4.00	67.
8489	1968	DODG	CORO	318	24.0	105.	.72	740.	120.	.93	310.	72.	.12	39.
8490	1968	DODG	MONA	383	30.0	110.	2.70	700.	100.	1.20	560.	80.	.20	62.
8491	1967	FORD	MUST	289	24.0	200.	.70	2400.	350.	2.30	1300.	320.	5.60	36.
8492	1967	FORD	FAIR	289	24.0	200.	1.30	1175.	310.	2.85	365.	375.	6.40	43.
8493	1966	FORD	FAIR	289	24.0	160.	.70	1750.	187.	.90	630.	250.	4.70	83.
8494	1968	FORD	GALA	302	24.0	67.	.10	1250.	60.	.09	540.	70.	.67	120.
8495	1968	FORD	TORI	302	24.0	220.	.14	3400.	300.	.75	1750.	820.	1.10	240.
8496	1968	FORD	GALA	390	24.0	100.	.50	1388.	95.	.40	510.	325.	4.85	67.
8497	1967	FORD	MUST	200	15.0	380.	2.00	1550.	410.	2.20	900.	410.	3.60	95.
8498	1967	FORD	GALA	289	24.0	280.	1.60	2350.	410.	2.10	1550.	510.	4.10	180.
8499	1967	FORD	MUST	289	24.0	135.	.29	410.	290.	2.20	140.	230.	4.90	6.
8500	1966	FORD	GALA	390	24.0	550.	3.00	920.	750.	2.50	600.	1850.	5.40	25.
8501	1968	FORD	STAW	390	30.0	2400.	.35	2900.	235.	.25	2000.	240.	3.00	80.
8502	1967	LINC	CONT	462	30.0	57.	1.70	175.	80.	2.00	82.	115.	2.50	20.
8503	1967	MERC	COUG	289	24.0	190.	1.30	2300.	380.	4.40	800.	650.	4.30	70.
8504	1967	OLDS	CUTL	330	24.0	115.	1.50	320.	140.	2.50	74.	380.	4.50	8.
8505	1967	OLDS	98	425	30.0	30.	.22	660.	62.	.82	310.	144.	1.40	49.
8506	1968	OLDS	CUTL	350	24.0	180.	1.65	2000.	220.	1.50	1600.	500.	6.40	31.
8507	1968	PLYM	FRY3	318	24.0	112.	.13	2350.	145.	.21	1425.	149.	1.75	49.
8508	1968	PLYM	FRY3	318	24.0	150.	.45	2800.	245.	1.35	1425.	275.	5.40	65.
8509	1968	PLYM	SATE	383	24.0	160.	.60	2550.	230.	1.40	980.	350.	4.10	42.
8510	1966	PLYM	FRY3	383	24.0	75.	1.06	480.	131.	1.83	265.	120.	1.30	97.
8511	1968	PONT	BONN	400	30.0	155.	.70	1700.	180.	1.60	630.	410.	5.05	45.

APPENDIX K

LISTING OF CLAYTON KEY MODE EMISSION
RESULTS ON INDIVIDUAL VEHICLES

ST. LOUIS

VEHICLE NUMBER	YEAR	MAKE	MODEL	CID	HP	HIGH SPEED HC	HIGH SPEED CO	HIGH SPEED NO	LOW SPEED HC	LOW SPEED CO	LOW SPEED NO	IDLE HC	IDLE CO	IDLE NO
8512	1966	PONT	CATA	389	30.0	150.	.41	2200.	241.	1.09	1900.	815.	5.82	27.
8513	1968	PONT	TEMP	350	24.0	105.	.15	2650.	90.	.09	645.	310.	3.30	79.
8514	1967	PONT	STAW	400	30.0	180.	.30	3400.	250.	.80	2400.	330.	2.40	140.
8515	1968	PONT	STAW	389	30.0	55.	.35	825.	115.	2.30	150.	155.	3.50	110.
8516	1967	VOLK	SEDA	91	15.0	320.	4.80	1000.	620.	6.20	220.	600.	3.40	57.
8517	1966	VOLK	SEDA	97	15.0	100.	.42	820.	127.	.28	520.	225.	1.00	24.

Appendix L

LISTING OF TWO-SPEED IDLE EMISSION RESULTS ON INDIVIDUAL VEHICLES

APPENDIX L

LISTING OF TWO-SPEED IDLE EMISSION
RESULTS ON INDIVIDUAL VEHICLES

ST. LOUIS

VEHICLE NUMBER	YEAR	MAKE	MODEL	CID	2250 RPM HC	2250 RPM CO	2250 RPM NO	IDLE HC	IDLE CO	IDLE NO
7002	1976	CHEV	C10	350	15.	.01	100.	45.	1.40	30.
7003	1976	CHEV	C10	350	10.	0.00	100.	10.	0.00	50.
7005	1976	DODG	B100	318	7.	0.00	240.	5.	0.00	80.
7007	1976	FORD	CLUB	302	25.	.05	150.	70.	1.10	50.
7008	1976	FORD	F150	360	26.	.40	120.	42.	.06	56.
7010	1976	TOYO	TRUC	140	10.	.08	40.	20.	.06	18.
7011	1975	CHEV	C10	350	6.	.04	32.	10.	0.00	64.
7012	1975	CHEV	TRUC	350	27.	.49	120.	86.	1.65	146.
7013	1975	CHEV	G10V	350	17.	0.00	64.	23.	0.00	19.
7014	1975	DODG	C100	318	7.	0.00	410.	13.	.03	64.
7015	1975	FORD	F100	302	5.	0.00	125.	4.	0.00	49.
7016	1975	FORD	F100	300	5.	0.00	180.	7.	0.00	30.
7017	1975	FORD	F100	360	8.	.03	59.	14.	.21	34.
6018	1976	AMC	HORN	258	14.	.06	300.	25.	.12	90.
6019	1976	BUIC	STAW	350	8.	0.00	120.	10.	0.00	65.
6020	1976	BUIC	SKYL	231	14.	0.00	98.	42.	4.20	41.
6021	1976	CADI	ELDO	500	17.	.01	120.	148.	1.55	48.
6022	1976	CHEV	IMPA	350	6.	0.00	1300.	7.	0.00	105.
6023	1976	CHEV	MONT	350	21.	0.00	110.	10.	0.00	105.
6024	1976	CHEV	VEGA	140	22.	.12	72.	33.	.75	47.
6025	1976	CHEV	STAW	400	20.	.01	130.	55.	.50	50.
6026	1976	CHEV	ELCA	305	7.	0.00	110.	8.	0.00	80.
6027	1976	CHEV	NOVA	250	7.	.01	155.	22.	.21	49.
6029	1976	DODG	STAW	318	50.	.01	0.	340.	1.80	0.
6030	1976	DODG	ASPE	225	56.	.01	145.	170.	.60	44.
6031	1976	FORD	MUST	140	25.	.01	220.	10.	0.00	38.
6032	1976	FORD	STAW	400	96.	.01	82.	220.	3.20	44.
6033	1976	FORD	STAW	351	55.	0.00	90.	30.	0.00	85.
6034	1976	FORD	GRAN	250	15.	0.00	29.	32.	0.00	25.
6035	1976	FORD	GRAN	302	40.	0.00	95.	15.	0.00	50.
6036	1976	FORD	TORI	351	50.	0.00	92.	20.	0.00	35.
6037	1976	MERC	COME	250	13.	0.00	38.	38.	0.00	22.
6038	1976	MERC	MONA	200	15.	0.00	40.	15.	0.00	35.
6039	1976	OLDS	CUTL	260	4.	0.00	190.	3.	0.00	130.
6040	1976	OLDS	CUTL	350	134.	.01	146.	300.	2.20	15.
6041	1976	OLDS	DELT	455	20.	.01	98.	380.	2.30	7.
6042	1976	PLYM	DUST	225	26.	.01	210.	76.	1.10	50.
6043	1976	PLYM	VOLA	318	120.	.01	95.	60.	.03	55.
6044	1976	PONT	LEMA	350	30.	0.00	140.	25.	0.00	52.
6045	1976	PONT	GRNP	400	6.	.01	100.	3.	0.00	36.
6046	1976	DATS	B210	85	6.	.05	46.	7.	.08	29.
6047	1976	DATS	B210	85	24.	.14	66.	38.	.26	20.
6048	1976	TOYO	CORO	97	6.	.04	37.	4.	.06	11.
6049	1976	TOYO	CELI	133	2.	.02	28.	2.	.03	10.
6050	1976	VOLK	SEDA	97	63.	1.29	4.	140.	1.12	4.
6051	1976	VOLK	RABB	97	20.	.12	1750.	18.	.21	46.
6201	1976	AMC	STAW	304	10.	0.00	160.	11.	0.00	50.
6202	1976	AMC	HORN	258	5.	.02	200.	10.	.01	80.
6203	1976	AMC	MATA	304	10.	0.00	96.	10.	0.00	52.
6204	1976	AMC	HORN	232	7.	.03	220.	8.	.12	38.

APPENDIX L

LISTING OF TWO-SPEED IDLE EMISSION
RESULTS ON INDIVIDUAL VEHICLES

ST. LOUIS

VEHICLE NUMBER	YEAR	MAKE	MODEL	CID	2250 RPM HC	2250 RPM CO	2250 RPM NO	IDLE HC	IDLE CO	IDLE NO
6205	1976	BUIC	CNTY	231	32.	.11	110.	176.	3.80	41.
6206	1976	BUIC	LASA	350	8.	.10	105.	8.	0.00	63.
6207	1976	BUIC	REGA	350	8.	0.00	130.	8.	0.00	42.
6208	1976	BUIC	STAW	350	6.	.01	115.	6.	.01	56.
6209	1976	BUIC	LESA	350	6.	0.00	98.	10.	0.00	58.
6210	1976	BUIC	SKYH	231	40.	.50	64.	50.	.40	38.
6211	1976	BUIC	SKYL	231	20.	0.00	70.	8.	0.00	41.
6212	1976	CADI	SEVI	350	3.	0.00	95.	4.	0.00	46.
6213	1976	CADI	FLEE	500	17.	0.00	90.	100.	.48	31.
6215	1976	CADI	DEVI	500	7.	0.00	85.	12.	0.00	78.
6216	1976	CHEV	CHET	97	60.	.34	200.	190.	2.30	9.
6217	1976	CHEV	CAPR	350	27.	.60	69.	70.	1.45	18.
6218	1976	CHEV	MONT	350	6.	0.00	78.	6.	0.00	34.
6219	1976	CHEV	STAW	350	12.	.16	86.	17.	.23	40.
6220	1976	CHEV	CAMA	250	4.	0.00	180.	7.	0.00	50.
6221	1976	CHEV	STAW	350	0.	0.00	92.	0.	0.00	40.
6222	1976	CHEV	CAMA	305	18.	.01	280.	114.	.95	32.
6223	1976	CHEV	CAPR	454	7.	0.00	35.	11.	0.00	13.
6224	1976	CHEV	MONT	350	15.	.08	84.	40.	.45	34.
6225	1976	CHEV	IMPA	350	10.	.02	92.	14.	.01	60.
6226	1976	CHEV	CAMA	305	4.	0.00	105.	3.	0.00	60.
6227	1976	CHEV	MONT	350	7.	0.00	240.	8.	0.00	62.
6228	1976	CHEV	VEGA	140	10.	.02	32.	5.	.06	64.
6229	1976	CHEV	MONZ	140	17.	0.00	95.	35.	.49	51.
6230	1976	CHEV	MONT	350	20.	0.00	130.	26.	0.00	51.
6231	1976	CHEV	CAMA	350	45.	.65	98.	80.	.80	39.
6232	1976	CHEV	CAMA	305	12.	0.00	105.	20.	0.00	30.
6233	1976	CHEV	MALI	350	3.	0.00	63.	2.	0.00	31.
6234	1976	CHEV	NOVA	305	10.	.01	130.	30.	.17	35.
6235	1976	CHEV	CHET	140	4.	0.00	230.	3.	0.00	160.
6236	1976	CHEV	IMPA	350	27.	.50	90.	10.	0.00	76.
6237	1976	CHEV	MALI	305	6.	0.00	130.	4.	0.00	83.
6238	1976	CHEV	VEGA	140	8.	.01	25.	7.	0.00	58.
6239	1976	CHEV	NOVA	250	8.	0.00	67.	8.	0.00	25.
6240	1976	CHRY	CORD	318	4.	.01	260.	8.	0.00	62.
6241	1976	CHRY	NEWY	400	13.	.02	79.	23.	.52	60.
6242	1976	DODG	CHAR	360	26.	.75	200.	60.	1.70	34.
6243	1976	DODG	MONA	400	1.	.01	90.	15.	.04	31.
6244	1976	DODG	ASPE	225	75.	.01	140.	16.	.02	76.
6245	1976	DODG	MONA	360	8.	.01	220.	48.	1.35	49.
6246	1976	DODG	STAW	225	32.	.02	76.	35.	.02	78.
6247	1976	DODG	ASPE	225	30.	.06	52.	104.	.75	35.
6248	1976	FORD	STAW	400	7.	0.00	125.	8.	0.00	140.
6249	1976	FORD	ELIT	351	100.	.07	100.	150.	.06	50.
6250	1976	FORD	MAVE	200	120.	.01	12.	26.	0.00	15.
6251	1976	FORD	THUN	460	23.	.01	94.	17.	0.00	82.
6252	1976	FORD	MUST	140	0.	0.00	58.	4.	0.00	36.
6253	1976	FORD	MAVE	250	16.	0.00	10.	12.	0.00	14.
6254	1976	FORD	GRAN	302	72.	0.00	43.	70.	0.00	83.
6255	1976	FORD	PINT	140	8.	.01	105.	10.	.01	24.

APPENDIX L

LISTING OF TWO-SPEED IDLE EMISSION
RESULTS ON INDIVIDUAL VEHICLES

ST. LOUIS

VEHICLE NUMBER	YEAR	MAKE	MODEL	CID	2250 RPM HC	2250 RPM CO	2250 RPM NO	IDLE HC	IDLE CO	IDLE NO
6256	1976	FORD	ELIT	351	50.	.06	150.	65.	.05	55.
6257	1976	FORD	STAW	140	6.	0.00	74.	5.	0.00	39.
6258	1976	FORD	GRAN	250	4.	0.00	25.	2.	0.00	34.
6259	1976	FORD	PINT	140	5.	0.00	105.	10.	0.00	39.
6260	1976	FORD	STAW	400	26.	.01	88.	14.	.02	38.
6261	1976	FORD	LTD	351	6.	0.00	300.	16.	.32	59.
6262	1976	FORD	THUN	460	6.	.01	220.	16.	.04	26.
6263	1976	FORD	MUST	171	12.	.02	220.	16.	0.00	45.
6264	1976	FORD	ELIT	400	188.	.02	200.	320.	1.80	13.
6265	1976	FORD	ELIT	351	15.	.04	120.	35.	.03	44.
6266	1976	FORD	GRAN	302	110.	0.00	47.	95.	0.00	53.
6267	1976	FORD	PINT	140	7.	0.00	18.	6.	0.00	4.
6268	1976	LINC	MRK4	460	10.	.01	58.	10.	0.00	89.
6270	1976	MERC	MONG	351	16.	.03	130.	17.	.24	37.
6271	1976	MERC	MARQ	400	70.	.24	180.	52.	.09	72.
6272	1976	MERC	COUG	351	42.	.02	125.	37.	.01	42.
6273	1976	MERC	STAW	400	18.	0.00	93.	72.	0.00	86.
6274	1976	MERC	MONA	302	15.	0.00	89.	13.	0.00	33.
6275	1976	OLDS	CUTL	350	15.	.02	240.	100.	.25	46.
6276	1976	OLDS	CUTL	350	43.	0.00	41.	17.	0.00	23.
6277	1976	OLDS	OMEG	250	5.	0.00	200.	10.	.20	10.
6279	1976	OLDS	STAW	455	12.	.01	89.	42.	.39	54.
6280	1976	OLDS	CUTL	350	12.	.01	110.	35.	.44	42.
6281	1976	OLDS	CUTL	350	26.	.01	43.	140.	1.10	13.
6282	1976	OLDS	CUTL	350	10.	0.00	120.	32.	.22	45.
6283	1976	OLDS	NINE	455	22.	.01	97.	36.	0.00	56.
6284	1976	PLYM	VOLA	318	40.	0.00	92.	176.	1.70	43.
6285	1976	PLYM	STAW	318	21.	.01	105.	32.	.10	42.
6286	1976	PLYM	FURY	318	55.	.01	96.	32.	.02	92.
6287	1976	PLYM	VOLA	225	20.	.01	185.	70.	.65	15.
6288	1976	PLYM	STAW	400	8.	.01	200.	35.	.90	55.
6289	1976	PLYM	STAW	225	22.	.01	120.	80.	.48	65.
6290	1976	PLYM	STAW	225	25.	.10	27.	95.	1.40	10.
6291	1976	PONT	SUNB	231	13.	.04	60.	35.	.80	41.
6292	1976	PONT	BONN	400	6.	0.00	150.	25.	0.00	55.
6293	1976	PONT	GRNP	350	12.	.05	110.	22.	0.00	66.
6294	1976	PONT	LEMA	260	10.	0.00	280.	6.	0.00	140.
6295	1976	PONT	CATA	455	15.	.01	64.	140.	1.50	12.
6296	1976	PONT	FIRE	350	12.	.04	45.	40.	.22	40.
6297	1976	PONT	GRNP	350	6.	0.00	160.	11.	0.00	82.
6298	1976	PONT	VENT	250	14.	0.00	76.	95.	.42	16.
6299	1976	CAPR	COUP	171	10.	.05	52.	15.	.02	36.
6300	1976	DODG	COLT	98	0.	0.00	100.	0.	.03	54.
6301	1976	DATS	B210	85	8.	.02	84.	9.	.02	16.
6302	1976	DATS	STAW	119	15.	.10	105.	28.	.46	7.
6303	1976	DATS	B210	85	25.	.16	150.	50.	.60	18.
6304	1976	FIAT	128	79	30.	.12	40.	57.	.38	35.
6305	1976	FIAT	131	107	10.	.13	34.	17.	.16	40.
6306	1976	HOND	CIVI	76	15.	.18	54.	15.	.18	56.
6307	1976	HOND	ACCO	98	10.	.01	115.	13.	.01	83.

APPENDIX L

LISTING OF TWO-SPEED IDLE EMISSION
RESULTS ON INDIVIDUAL VEHICLES

ST. LOUIS

VEHICLE NUMBER	YEAR	MAKE	MODEL	CID	2250 RPM HC	2250 RPM CO	2250 RPM NO	IDLE HC	IDLE CO	IDLE NO
6308	1976	MAZD	RX4	80	8.	.01	35.	7.	.01	21.
6309	1976	TOYO	CORO	97	17.	.17	26.	27.	.25	11.
6310	1976	TOYO	CORO	97	6.	.04	57.	6.	.16	14.
6311	1976	TOYO	CELI	133	4.	0.00	54.	2.	0.00	34.
6312	1976	TOYO	CORO	97	9.	.06	43.	15.	.23	13.
6313	1976	VOLK	RABB	97	12.	.05	48.	16.	.11	31.
6314	1976	VOLK	RABB	97	6.	0.00	200.	8.	0.00	65.
6315	1976	VOLK	RABB	97	5.	0.00	82.	5.	0.00	52.
6316	1976	VOLV	264G	163	15.	.10	54.	26.	.26	29.
5052	1975	AMC	GREM	258	8.	.01	300.	15.	.32	100.
5053	1975	BUIC	STAW	350	12.	0.00	24.	10.	0.00	16.
5054	1975	BUIC	ELEC	455	10.	.01	64.	27.	.48	46.
5055	1975	CADI	DEVI	500	12.	0.00	110.	50.	.10	60.
5056	1975	CHEV	MONZ	140	5.	0.00	300.	4.	0.00	64.
5057	1975	CHEV	MONT	350	10.	.08	80.	8.	0.00	70.
5058	1975	CHEV	MALI	350	6.	0.00	120.	7.	0.00	83.
5059	1975	CHEV	STAW	400	10.	0.00	62.	10.	0.00	46.
5060	1975	CHEV	CAMA	250	6.	0.00	105.	30.	.17	35.
5061	1975	CHRY	CORD	360	7.	0.00	75.	9.	.12	10.
5062	1975	DODG	DART	318	14.	0.00	79.	52.	1.00	53.
5063	1975	FORD	PINT	140	8.	.06	19.	15.	.40	9.
5064	1975	FORD	MAVE	302	4.	.01	130.	8.	.02	38.
5065	1975	FORD	LTD	400	16.	.12	180.	62.	.49	64.
5066	1975	FORD	GRAN	250	7.	0.00	325.	8.	0.00	38.
5067	1975	FORD	GRAN	302	30.	0.00	52.	30.	0.00	27.
5068	1975	MERC	MONG	351	10.	.01	46.	20.	.05	21.
5069	1975	OLDS	CUTL	350	7.	0.00	86.	8.	0.00	66.
5070	1975	OLDS	98	455	120.	1.40	180.	100.	1.30	56.
5071	1975	PLYM	VALI	225	195.	.48	280.	140.	2.60	32.
5072	1975	PLYM	VALI	318	58.	1.40	174.	16.	.01	44.
5073	1975	PONT	CATA	400	2.	.01	155.	1.	0.00	31.
5074	1975	PONT	FIRE	350	12.	.01	94.	56.	.75	9.
5075	1975	DATS	B210	85	26.	.04	100.	30.	.26	28.
5076	1975	TOYO	CELI	133	15.	.07	120.	12.	.13	16.
5077	1975	TOYO	CORO	97	16.	.23	52.	15.	.15	34.
5078	1975	VOLK	SCIR	90	5.	0.00	68.	8.	0.00	50.
5317	1975	AMC	MATA	304	7.	0.00	240.	6.	0.00	40.
5318	1975	BUIC	SKYH	231	25.	.23	33.	55.	1.25	17.
5320	1975	CHEV	MONZ	140	11.	0.00	260.	40.	.60	55.
5321	1975	CHEV	IMPA	350	3.	0.00	63.	4.	0.00	22.
5322	1975	CHEV	STAW	350	31.	.52	110.	80.	1.10	40.
5323	1975	CHEV	CAMA	350	5.	0.00	115.	7.	0.00	46.
5324	1975	CHEV	IMPA	400	8.	0.00	170.	25.	0.00	109.
5325	1975	DODG	DART	318	5.	.01	83.	12.	.25	62.
5326	1975	FORD	MUST	140	20.	.10	42.	25.	.55	15.
5327	1975	FORD	LTD	400	5.	.01	95.	5.	.01	59.
5328	1975	FORD	LTD	351	16.	.03	140.	85.	.03	56.
5329	1975	LINC	MRK4	460	30.	1.30	34.	30.	.23	42.
5330	1975	MERC	COUG	351	17.	.02	69.	65.	.02	33.
5331	1975	OLDS	CUTL	260	25.	0.00	98.	18.	0.00	20.

APPENDIX L

LISTING OF TWO-SPEED IDLE EMISSION
RESULTS ON INDIVIDUAL VEHICLES

ST. LOUIS

VEHICLE NUMBER	YEAR	MAKE	MODEL	CID	2250 RPM HC	2250 RPM CO	2250 RPM NO	IDLE HC	IDLE CO	IDLE NO
5332	1975	OLDS	CUTL	350	0.	0.00	80.	0.	0.00	50.
5333	1975	PLYM	FURY	318	18.	.01	345.	14.	.22	57.
5334	1975	PONT	GRNP	400	36.	.45	85.	83.	1.10	37.
5335	1975	DATS	710	119	7.	.03	125.	7.	.06	36.
5336	1975	FIAT	131	107	5.	.02	52.	5.	.06	46.
5337	1975	HOND	CVCC	91	8.	.01	100.	17.	.03	90.
5338	1975	MAZD	STAW	70	6.	.02	54.	6.	0.00	24.
4080	1974	AMC	AMBA	360	700.	.15	250.	1300.	1.40	40.
4081	1974	BUIC	CNTY	350	108.	.02	150.	16.	.06	38.
4082	1974	CADI	DEVI	472	13.	.06	34.	26.	.16	24.
4083	1974	CHEV	VEGA	140	152.	1.50	240.	180.	1.10	165.
4084	1974	CHEV	CHEL	350	51.	.22	75.	117.	.30	30.
4085	1974	CHEV	NOVA	250	360.	.23	118.	255.	3.60	52.
4086	1974	CHEV	NOVA	350	42.	.27	79.	50.	.95	43.
4087	1974	CHEV	CHEL	350	43.	.09	75.	55.	.14	50.
4088	1974	CHEV	STAW	400	50.	.75	36.	90.	2.25	18.
4089	1974	CHRY	NEWP	400	32.	.09	140.	102.	2.52	26.
4090	1974	DODG	CHAR	318	15.	.15	330.	34.	.55	53.
4091	1974	FORD	PINT	122	15.	.08	60.	52.	1.75	25.
4092	1974	FORD	TORI	302	34.	.05	52.	77.	.78	8.
4093	1974	FORD	PINT	140	10.	.19	115.	23.	.60	24.
4094	1974	FORD	STAW	400	30.	.05	96.	73.	1.12	33.
4095	1974	FORD	STAW	351	180.	.25	260.	220.	4.90	42.
4096	1974	MERC	MONT	302	55.	.13	200.	200.	1.50	8.
4097	1974	OLDS	CUTL	350	73.	.12	175.	110.	1.05	65.
4098	1974	OLDS	STAW	455	23.	.07	145.	195.	.26	50.
4099	1974	PLYM	SCAM	318	72.	.35	500.	190.	3.30	66.
4100	1974	PLYM	DUST	225	27.	.05	205.	180.	.08	52.
4101	1974	PONT	GRNP	400	25.	.03	30.	20.	.04	22.
4102	1974	DATS	710	119	10.	.07	190.	17.	.21	60.
4103	1974	TOYO	CORO	97	33.	.55	69.	70.	.93	33.
4104	1974	TOYO	STAW	120	42.	.39	76.	179.	2.60	10.
4105	1974	VOLK	SEDA	97	98.	.38	240.	200.	4.20	68.
4106	1974	VOLK	SEDA	97	61.	.08	89.	225.	.65	48.
4339	1974	AMC	HORN	258	120.	2.30	420.	140.	3.50	80.
4340	1974	BUIC	REGA	350	17.	.08	44.	25.	.16	17.
4341	1974	BUIC	RIVI	455	17.	.06	160.	75.	1.00	25.
4342	1974	CHEV	CHEL	350	260.	.15	63.	120.	.13	44.
4343	1974	CHEV	MONT	350	810.	.15	81.	275.	.15	36.
4344	1974	CHEV	CHEL	350	450.	1.95	105.	175.	3.30	60.
4345	1974	CHEV	STAW	400	55.	.10	200.	120.	1.65	65.
4346	1974	CHEV	VEGA	140	75.	.45	41.	360.	1.20	61.
4347	1974	DODG	DART	225	140.	.62	405.	305.	3.52	68.
4348	1974	DODG	DART	318	90.	.40	430.	220.	3.60	51.
4349	1974	FORD	TORI	351	380.	.55	250.	160.	1.50	60.
4350	1974	FORD	GALA	400	65.	.10	200.	200.	5.30	50.
4351	1974	FORD	LTD	400	775.	.13	180.	525.	5.20	50.
4352	1974	FORD	MUST	140	215.	4.20	97.	292.	5.20	60.
4353	1974	LINC	MRK4	460	50.	1.70	100.	50.	1.30	62.
4354	1974	MERC	MONG	351	95.	.35	180.	145.	.50	56.

APPENDIX L

LISTING OF TWO-SPEED IDLE EMISSION
RESULTS ON INDIVIDUAL VEHICLES

ST. LOUIS

VEHICLE NUMBER	YEAR	MAKE	MODEL	CID	2250 RPM HC	2250 RPM CO	2250 RPM NO	IDLE HC	IDLE CO	IDLE NO
4355	1974	OLDS	CUTL	350	160.	5.45	79.	150.	5.40	50.
4356	1974	PLYM	FRY3	360	150.	2.60	210.	200.	5.60	54.
4357	1974	PONT	BONN	400	100.	1.50	98.	410.	8.10	33.
4358	1974	PONT	LEMA	350	95.	.15	285.	450.	5.10	43.
4359	1974	CAPR	SPOR	122	16.	.08	145.	35.	.42	62.
4360	1974	DATS	B210	79	120.	1.00	120.	250.	1.50	62.
4361	1974	MAZD	STAW	70	16.	.01	25.	10.	0.00	24.
3107	1973	AMC	GREM	232	70.	.10	245.	460.	3.95	49.
3108	1973	BUIC	CNTR	455	135.	.13	1575.	120.	.16	55.
3109	1973	BUIC	CNTY	350	47.	.10	76.	60.	1.60	26.
3110	1973	CADI	DEVI	472	22.	.03	75.	28.	.32	23.
3111	1973	CHEV	VEGA	140	26.	.62	45.	70.	1.80	18.
3112	1973	CHEV	MONT	350	27.	.08	130.	65.	.70	35.
3113	1973	CHEV	CAMA	350	27.	.23	240.	64.	3.30	45.
3114	1973	CHEV	IMPA	350	22.	.06	92.	82.	.05	23.
3115	1973	CHEV	IMPA	350	48.	.11	87.	65.	.83	36.
3116	1973	DODG	DART	225	47.	.10	480.	125.	.08	40.
3117	1973	FORD	PINT	122	15.	.37	90.	20.	.45	28.
3118	1973	FORD	TORI	351	120.	1.15	170.	268.	5.25	49.
3119	1973	FORD	MUST	302	125.	.45	170.	200.	4.80	60.
3120	1973	FORD	TORI	351	30.	.18	230.	95.	2.20	62.
3121	1973	FORD	STAW	400	37.	.18	260.	110.	3.30	85.
3122	1973	MERC	MONG	400	35.	.08	260.	150.	4.80	45.
3123	1973	OLDS	TORO	455	15.	.07	92.	30.	.09	26.
3124	1973	OLDS	CUTL	350	27.	.09	165.	200.	4.40	55.
3125	1973	PLYM	SATE	318	85.	.15	270.	125.	2.40	40.
3126	1973	PLYM	VALI	318	16.	.06	320.	77.	1.20	47.
3127	1973	PONT	GRNV	400	47.	.08	44.	170.	2.30	28.
3128	1973	PONT	LEMA	350	660.	.22	360.	1400.	.12	120.
3129	1973	DATS	STAW	97	295.	1.05	63.	183.	2.85	20.
3130	1973	OPEL	STAW	116	54.	1.55	84.	31.	.65	52.
3131	1973	TOYO	CARI	97	29.	.38	73.	127.	1.50	26.
3132	1973	VOLK	SEDA	103	26.	.18	125.	50.	.45	60.
3133	1973	VOLK	SEDA	97	490.	.25	255.	205.	3.60	74.
3362	1973	BUIC	CNTY	350	85.	.15	100.	75.	.80	36.
3363	1973	BUIC	RIVE	455	1950.	.12	53.	100.	.16	49.
3364	1973	CHEV	STAW	400	50.	.25	180.	210.	4.30	50.
3365	1973	CHEV	VEGA	140	250.	2.70	380.	550.	6.40	28.
3366	1973	CHEV	NOVA	250	85.	.13	175.	87.	.10	34.
3367	1973	CHEV	IMPA	350	60.	.20	160.	75.	.65	30.
3368	1973	CHEV	CAMA	307	12.	.06	45.	15.	.32	11.
3369	1973	CHEV	STAW	454	105.	.30	108.	720.	1.70	43.
3370	1973	CHRY	NEWP	400	110.	.36	400.	210.	4.50	49.
3371	1973	DODG	CHAR	318	1100.	.25	600.	150.	1.80	51.
3372	1973	DODG	STAW	360	55.	1.10	175.	200.	1.90	38.
3373	1973	FORD	PINT	122	210.	3.30	63.	225.	4.50	37.
3374	1973	FORD	TORI	351	880.	.18	243.	145.	.40	46.
3375	1973	FORD	STAW	400	13.	.07	71.	45.	.42	9.
3376	1973	FORD	STAW	400	170.	.02	300.	195.	.04	42.
3377	1973	MERC	MONG	302	45.	.13	185.	65.	.24	82.

APPENDIX L

LISTING OF TWO-SPEED IDLE EMISSION
RESULTS ON INDIVIDUAL VEHICLES

ST. LOUIS

VEHICLE NUMBER	YEAR	MAKE	MODEL	CID	2250 RPM HC	2250 RPM CO	2250 RPM NO	IDLE HC	IDLE CO	IDLE NO
3378	1973	OLDS	DELT	350	76.	.11	97.	440.	.34	45.
3379	1973	OLDS	NNTY	455	23.	.08	190.	38.	.18	80.
3380	1973	PLYM	FRY3	360	160.	2.10	255.	365.	5.20	33.
3381	1973	PONT	VENT	350	65.	.25	96.	230.	4.00	49.
3382	1973	PONT	GRNV	455	43.	.21	195.	140.	.08	25.
3383	1973	MERC	CAPR	122	75.	.65	100.	150.	.95	30.
3384	1973	MAZD	RX3	70	55.	.03	65.	50.	.04	40.
2134	1972	AMC	MATA	258	25.	.13	150.	30.	.22	22.
2135	1972	BUIC	ELEC	455	27.	.03	75.	35.	.39	14.
2136	1972	CADI	CALA	472	33.	.06	145.	63.	.43	35.
2137	1972	CHEV	VEGA	140	49.	.14	110.	175.	.18	58.
2138	1972	CHEV	STAW	350	105.	.85	190.	210.	3.80	60.
2139	1972	CHEV	CHEL	350	16.	.05	61.	92.	1.81	16.
2140	1972	CHEV	CHEL	307	98.	.10	205.	290.	3.50	56.
2141	1972	CHEV	STAW	350	84.	.14	255.	195.	2.95	57.
2142	1972	CHEV	CAPR	400	75.	.15	300.	200.	4.40	70.
2143	1972	DODG	CHAR	318	17.	.11	120.	34.	.15	23.
2144	1972	FORD	PINT	122	1500.	.15	200.	240.	1.70	26.
2145	1972	FORD	TORI	351	885.	.28	730.	200.	4.95	72.
2146	1972	FORD	MAVE	200	37.	.11	210.	76.	1.70	27.
2147	1972	FORD	STAW	400	175.	.25	430.	150.	3.60	83.
2148	1972	FORD	LTD	400	80.	.45	420.	135.	3.60	70.
2149	1972	MERC	MONR	400	40.	.13	275.	200.	.20	95.
2150	1972	OLDS	CUTL	350	15.	.06	125.	43.	.21	25.
2151	1972	PLYM	DUST	225	105.	1.10	840.	197.	2.90	70.
2152	1972	PLYM	FRY3	360	175.	3.35	255.	240.	7.40	20.
2153	1972	PONT	GRNV	400	28.	.05	100.	195.	1.65	35.
2154	1972	PONT	FIRE	350	45.	.35	185.	140.	2.12	80.
2155	1972	DATS	510	97	52.	.45	72.	95.	2.10	12.
2156	1972	TOYO	CELI	120	360.	4.40	84.	1025.	5.40	35.
2157	1972	VOLK	SEDA	97	175.	3.80	89.	490.	5.40	37.
2158	1972	VOLK	SEDA	97	25.	.38	89.	38.	.60	38.
2385	1972	BUIC	STAW	350	26.	.39	79.	45.	.35	37.
2386	1972	BUIC	LESA	350	105.	1.60	225.	160.	3.20	60.
2387	1972	CHEV	VEGA	140	120.	1.10	240.	300.	4.90	60.
2388	1972	CHEV	NOVA	250	32.	.30	205.	95.	1.20	80.
2389	1972	CHEV	MALI	350	50.	.55	198.	120.	1.90	70.
2390	1972	CHEV	IMPA	350	27.	.45	170.	81.	1.70	90.
2391	1972	CHEV	IMPA	400	70.	.15	200.	150.	3.10	65.
2392	1972	CHRY	NEWP	400	50.	1.50	50.	260.	3.20	14.
2393	1972	DODG	DEMO	225	40.	.14	195.	108.	2.80	16.
2394	1972	FORD	PINT	122	125.	1.55	370.	200.	3.10	75.
2395	1972	FORD	TORI	302	60.	.25	220.	750.	3.80	36.
2396	1972	FORD	MUST	351	150.	.60	340.	200.	6.50	70.
2397	1972	FORD	GALA	429	1650.	.04	600.	95.	.08	65.
2398	1972	LINC	MRK4	460	18.	.04	97.	53.	1.28	29.
2399	1972	MERC	MONG	302	30.	.11	91.	73.	1.30	28.
2400	1972	OLDS	CUTL	350	26.	.11	190.	90.	1.00	55.
2401	1972	OLDS	STAW	455	95.	.15	235.	65.	.80	44.
2402	1972	PLYM	SATE	318	40.	.12	280.	137.	3.70	60.

APPENDIX L

LISTING OF TWO-SPEED IDLE EMISSION
RESULTS ON INDIVIDUAL VEHICLES

ST. LOUIS

VEHICLE NUMBER	YEAR	MAKE	MODEL	CID	2250 RPM HC	2250 RPM CO	2250 RPM NO	IDLE HC	IDLE CO	IDLE NO
2403	1972	PONT	STAW	400	75.	.18	310.	680.	5.30	27.
2404	1972	CAPR	COUP	122	188.	3.30	98.	290.	5.90	32.
1159	1971	BUIC	RIVE	455	33.	.21	61.	100.	2.40	22.
1160	1971	BUIC	SKYL	350	67.	.08	80.	340.	1.05	25.
1161	1971	CHEV	VEGA	140	90.	.60	230.	225.	5.60	90.
1162	1971	CHEV	CHEL	350	90.	.10	160.	375.	5.05	60.
1163	1971	CHEV	NOVA	250	25.	.04	78.	42.	.07	38.
1164	1971	CHEV	IMPA	350	58.	1.05	185.	145.	2.55	68.
1165	1971	CHEV	IMPA	350	7.	.01	80.	8.	.02	30.
1166	1971	CHRY	NEWP	383	40.	.14	350.	70.	1.60	47.
1167	1971	DODG	CHAR	318	550.	.32	363.	1740.	1.30	63.
1168	1971	FORD	PINT	122	85.	1.15	270.	85.	.40	90.
1169	1971	FORD	TORI	302	40.	.07	255.	57.	.47	125.
1170	1971	FORD	MAVE	200	1280.	.04	560.	193.	2.80	85.
1171	1971	FORD	GALA	351	95.	.31	610.	172.	3.10	56.
1172	1971	FORD	STAW	400	55.	.09	183.	130.	.80	70.
1173	1971	MERC	COUG	351	1200.	.18	80.	220.	4.80	50.
1174	1971	OLDS	CUTL	350	35.	.10	190.	130.	2.70	50.
1175	1971	PLYM	DUST	225	7.	.03	530.	10.	.17	125.
1176	1971	PONT	CATA	350	23.	.14	220.	165.	3.30	60.
1177	1971	PONT	LEMA	350	88.	.50	185.	190.	2.60	71.
1178	1971	DATS	B110	97	2000.	4.10	30.	2000.	3.30	33.
1179	1971	TOYO	CORO	71	165.	1.75	375.	293.	4.35	58.
1180	1971	VOLK	SEDA	97	135.	1.65	145.	340.	3.40	58.
1405	1971	AMC	MATA	360	55.	.25	290.	82.	.46	85.
1406	1971	BUIC	ELEC	455	30.	.07	68.	154.	2.15	14.
1407	1971	CADI	DEVI	472	20.	.25	195.	70.	1.45	33.
1408	1971	CHEV	MONT	350	37.	.30	195.	240.	5.20	40.
1409	1971	CHEV	CHEL	307	105.	.28	530.	660.	3.50	48.
1410	1971	CHEV	CHEL	350	43.	.31	205.	195.	1.20	64.
1411	1971	CHEV	IMPA	350	43.	.12	178.	510.	5.80	17.
1412	1971	DODG	DART	225	220.	2.20	370.	695.	7.80	10.
1413	1971	FORD	MUST	302	690.	.13	125.	235.	2.20	21.
1414	1971	FORD	TORI	351	65.	.20	270.	95.	1.65	10.
1415	1971	FORD	LTD	351	1840.	.25	335.	2000.	.67	53.
1416	1971	MERC	MONR	400	170.	1.20	460.	135.	.30	58.
1417	1971	OLDS	CUTL	350	170.	.30	340.	110.	2.20	67.
1418	1971	OLDS	CUTL	350	230.	.75	275.	160.	2.95	62.
1419	1971	PLYM	DUST	318	125.	1.17	310.	330.	5.90	35.
1420	1971	PLYM	STAW	360	410.	4.00	72.	180.	3.00	40.
1421	1971	PONT	CATA	350	25.	.25	200.	110.	.15	53.
1422	1971	VOLK	SEDA	97	80.	1.90	34.	210.	3.00	15.
0181	1970	AMC	JAVE	232	155.	.85	263.	300.	2.20	70.
0182	1970	BUIC	LESA	455	45.	.15	295.	875.	.25	43.
0183	1970	CHEV	NOVA	250	0.	0.00	160.	0.	0.00	52.
0184	1970	CHEV	CHEL	307	350.	2.20	169.	1510.	8.21	8.
0185	1970	CHEV	CHEL	350	34.	.22	100.	88.	2.10	25.
0186	1970	CHEV	IMPA	350	260.	5.00	165.	450.	4.10	45.
0187	1970	CHEV	IMPA	350	100.	.40	190.	175.	1.75	75.
0188	1970	DODG	CORO	225	55.	.80	300.	125.	2.20	30.

APPENDIX L

LISTING OF TWO-SPEED IDLE EMISSION
RESULTS ON INDIVIDUAL VEHICLES

ST. LOUIS

VEHICLE NUMBER	YEAR	MAKE	MODEL	CID	2250 RPM HC	2250 RPM CO	2250 RPM NO	IDLE HC	IDLE CO	IDLE NO
0189	1970	FORD	MUST	302	50.	.11	170.	190.	3.00	55.
0190	1970	FORD	STAW	302	145.	1.14	265.	390.	4.85	35.
0191	1970	FORD	LTD	351	250.	.25	550.	1100.	1.50	80.
0192	1970	FORD	LTD	351	20.	.05	140.	30.	.25	17.
0193	1970	MERC	MARQ	390	17.	.13	550.	28.	.52	85.
0194	1970	OLDS	STAW	350	23.	.36	66.	90.	2.40	19.
0195	1970	PLYM	STAW	383	56.	.26	110.	105.	.15	19.
0196	1970	PLYM	DUST	318	47.	.20	110.	95.	2.70	16.
0197	1970	PONT	LEMA	350	43.	.07	125.	255.	2.60	20.
0198	1970	DATS	510	97	90.	.42	96.	175.	1.30	8.
0200	1970	VOLK	SEDA	97	53.	1.45	43.	110.	3.60	13.
0423	1970	BUIC	SKYL	350	350.	3.75	140.	360.	7.80	35.
0424	1970	BUIC	SKYL	350	160.	2.30	155.	860.	6.40	18.
0425	1970	CADI	DEVI	472	10.	.18	235.	54.	.36	42.
0426	1970	CHEV	CAMA	307	15.	.04	200.	35.	.42	60.
0427	1970	CHEV	STAW	350	35.	.36	115.	108.	2.25	14.
0428	1970	CHEV	IMPA	400	88.	.10	175.	183.	2.60	70.
0429	1970	CHRY	STAW	383	68.	.13	330.	95.	1.43	76.
0430	1970	DODG	CHAR	318	315.	5.40	125.	150.	2.20	97.
0431	1970	FORD	MAVE	200	27.	.07	125.	47.	.55	51.
0432	1970	FORD	GALA	351	3.	0.00	210.	5.	.07	70.
0433	1970	FORD	LTD	390	180.	.85	360.	360.	3.20	56.
0434	1970	OLDS	DELT	350	42.	.80	150.	102.	1.50	66.
0435	1970	PLYM	SATE	318	140.	.80	265.	360.	6.20	50.
0436	1970	PONT	GRNP	400	100.	.17	210.	900.	.20	60.
0437	1970	VOLK	SEDA	97	95.	.42	120.	260.	4.90	40.
9438	1969	AMC	RAMB	199	22.	.27	170.	28.	.45	59.
9439	1969	BUIC	WILD	430	775.	1.00	382.	490.	5.80	30.
9440	1969	BUIC	SPEC	350	205.	1.00	250.	560.	5.70	15.
9441	1969	CADI	DEVI	472	38.	.17	140.	65.	.18	43.
9442	1969	CHEV	NOVA	307	88.	.29	290.	215.	4.10	59.
9443	1969	CHEV	IMPA	350	220.	.30	390.	220.	4.20	40.
9444	1969	CHEV	CAMA	307	30.	.20	180.	80.	2.50	23.
9445	1969	CHEV	IMPA	327	100.	.25	150.	290.	5.60	60.
9446	1969	CHEV	ELCA	350	540.	1.85	280.	500.	5.50	25.
9447	1969	CHEV	NOVA	250	130.	.11	175.	55.	.80	25.
9448	1969	CHEV	BELA	350	170.	2.85	58.	55.	.37	43.
9449	1969	CHRY	NEWP	383	20.	.05	200.	112.	1.00	55.
9450	1969	DODG	POLA	318	82.	1.18	114.	45.	.05	29.
9451	1969	FORD	LTD	390	15.	.02	220.	25.	.17	65.
9452	1969	FORD	FALC	302	120.	1.05	415.	390.	.13	57.
9453	1969	FORD	GALA	351	65.	.48	235.	270.	4.20	67.
9454	1969	FORD	LTD	390	103.	.95	245.	220.	.80	87.
9455	1969	FORD	FAIR	302	120.	.25	450.	205.	3.40	68.
9456	1969	FORD	THUN	429	75.	.25	525.	90.	.20	78.
9457	1969	MERC	MONG	351	12.	.03	140.	98.	2.10	31.
9458	1969	OLDS	98	455	20.	.06	65.	80.	.25	15.
9459	1969	OLDS	CUTL	350	125.	.42	275.	150.	.31	65.
9460	1969	PLYM	SATE	318	115.	1.05	290.	230.	2.30	50.
9461	1969	PLYM	VALI	225	2000.	3.50	230.	2000.	4.70	30.

APPENDIX I

LISTING OF TWO-SPEED IDLE EMISSION
RESULTS ON INDIVIDUAL VEHICLES

ST. LOUIS

VEHICLE NUMBER	YEAR	MAKE	MODEL	CID	2250 RPM HC	2250 RPM CO	2250 RPM NO	IDLE HC	IDLE CO	IDLE NO
9462	1969	PONT	LEMA	350	170.	.32	140.	85.	1.40	20.
9463	1969	PONT	CATA	400	67.	1.22	95.	250.	1.05	28.
9464	1969	PONT	STAW	400	45.	.37	160.	145.	1.50	44.
9465	1969	TOYO	CORO	116	20.	.19	52.	27.	.36	8.
9466	1969	VOLK	SEDA	91	107.	.45	137.	255.	2.65	42.
9467	1969	VOLK	SEDA	91	825.	5.80	38.	1300.	6.00	34.
8468	1966	AMC	STAW	199	123.	.16	660.	240.	4.70	71.
8469	1968	AMC	RAMB	232	35.	.22	200.	50.	.80	34.
8470	1967	AMC	REBE	290	110.	.55	440.	200.	2.40	50.
8471	1968	BUIC	WILD	430	495.	.25	110.	520.	.85	36.
8472	1968	BUIC	ELEC	430	65.	.10	460.	105.	.75	40.
8473	1968	BUIC	LESA	350	220.	1.50	340.	222.	3.50	60.
8474	1966	CADI	DEVI	429	550.	6.90	81.	525.	7.05	38.
8475	1968	CHEV	CHEL	230	383.	.25	410.	135.	.38	80.
8476	1967	CHEV	CHEL	283	1950.	4.40	92.	2000.	5.30	28.
8477	1967	CHEV	IMPA	283	190.	2.10	195.	700.	5.05	43.
8478	1968	CHEV	IMPA	327	680.	3.75	140.	1350.	7.20	27.
8479	1966	CHEV	IMPA	327	179.	.31	150.	180.	.27	79.
8480	1968	CHEV	IMPA	396	265.	5.30	105.	330.	5.20	43.
8481	1966	CHEV	CHEL	283	690.	3.50	183.	1600.	5.70	21.
8482	1967	CHEV	CAMA	250	175.	2.00	220.	1950.	6.00	140.
8483	1968	CHEV	CHEL	307	1325.	.61	710.	1410.	4.45	45.
8484	1968	CHEV	CHEL	318	205.	2.40	183.	410.	3.75	54.
8485	1968	CHEV	IMPA	327	175.	2.80	120.	320.	5.65	49.
8486	1968	CHEV	IMPA	302	210.	.45	350.	215.	4.15	31.
8487	1968	CHRY	NEWP	383	210.	.42	380.	107.	2.40	75.
8488	1967	DODG	DART	225	540.	6.70	93.	450.	5.05	49.
8489	1968	DODG	CORO	318	60.	.95	96.	57.	.07	31.
8490	1968	DODG	MONA	383	60.	1.70	150.	50.	.10	58.
8491	1967	FORD	MUST	289	310.	2.53	233.	390.	5.40	36.
8492	1967	FORD	FAIR	289	145.	2.40	135.	350.	5.95	48.
8493	1966	FORD	FAIR	289	98.	1.10	195.	230.	3.80	75.
8494	1968	FORD	GALA	302	30.	.13	120.	50.	.90	50.
8495	1968	FORD	TORI	302	170.	.30	330.	440.	.50	125.
8496	1968	FORD	GALA	390	53.	.32	220.	250.	3.90	65.
8497	1967	FORD	MUST	200	240.	1.70	480.	300.	2.70	65.
8498	1967	FORD	GALA	289	410.	2.80	210.	600.	3.90	84.
8499	1967	FORD	MUST	289	475.	1.85	37.	235.	5.00	7.
8500	1966	FORD	GALA	390	560.	2.60	20.	1850.	5.40	10.
8501	1968	FORD	STAW	390	155.	.95	300.	205.	2.70	65.
8502	1967	LINC	CONT	462	65.	2.20	51.	120.	2.70	16.
8503	1967	MERC	COUG	289	350.	4.30	120.	560.	3.80	40.
8504	1967	OLDS	CUTL	330	100.	1.85	57.	315.	4.20	10.
8505	1967	OLDS	98	425	47.	1.40	115.	110.	1.55	39.
8506	1968	OLDS	CUTL	350	650.	1.35	380.	600.	6.00	37.
8507	1968	PLYM	FRY3	318	67.	.39	330.	105.	1.10	25.
8508	1968	PLYM	FRY3	318	105.	.85	245.	215.	4.80	60.
8509	1968	PLYM	SATE	383	110.	1.50	260.	335.	4.60	33.
8510	1966	PLYM	FRY3	383	190.	2.20	82.	93.	1.52	33.
8511	1968	PONT	BONN	400	95.	.58	240.	425.	4.25	40.

APPENDIX L

LISTING OF TWO-SPEED IDLE EMISSION
RESULTS ON INDIVIDUAL VEHICLES

ST. LOUIS

VEHICLE NUMBER	YEAR	MAKE	MODEL	CID	2250 RPM HC	2250 RPM CO	2250 RPM NO	IDLE HC	IDLE CO	IDLE NO
8512	1966	PONT	CATA	389	31.	1.94	277.	975.	5.41	30.
8513	1968	PONT	TEMP	350	240.	.11	430.	345.	3.20	60.
8514	1967	PONT	STAW	400	170.	1.25	440.	440.	2.20	70.
8515	1968	PONT	STAW	389	130.	2.35	48.	140.	3.50	9.
8516	1967	VOLK	SEDA	91	820.	6.90	26.	620.	3.50	42.
8517	1966	VOLK	SEDA	97	110.	1.00	40.	220.	1.10	16.

Appendix M

LISTING OF FEDERAL THREE-MODE EMISSION RESULTS ON INDIVIDUAL VEHICLES

APPENDIX M

LISTING OF FEDERAL THREE MODE EMISSION
RESULTS ON INDIVIDUAL VEHICLES

ST. LOUIS

VEHICLE NUMBER	YEAR	MAKE	MODEL	CID	MODE	RLHP	HC	CO	NO
7002	1976	CHEV	C10	350	HI SPEED	31.0	12.	.01	600.
					LO SPEED	15.0	10.	0.00	300.
					IDLE DR.		55.	1.50	25.
					IDLE NEU.		65.	1.40	18.
7003	1976	CHEV	C10	350	HI SPEED	31.0	12.	.01	1200.
					LO SPEED	15.0	10.	0.00	650.
					IDLE DR.		10.	0.00	120.
					IDLE NEU.		10.	0.00	60.
7005	1976	DODG	B100	318	HI SPEED	31.0	5.	0.00	600.
					LO SPEED	15.0	4.	0.00	2200.
					IDLE DR.		4.	0.00	130.
					IDLE NEU.		4.	0.00	79.
7007	1976	FORD	CLUB	302	HI SPEED	31.0	25.	.03	2700.
					LO SPEED	15.0	40.	.03	1100.
					IDLE DR.		95.	1.20	78.
					IDLE NEU.		80.	1.20	52.
7008	1976	FORD	F150	360	HI SPEED	31.0	56.	.42	840.
					LO SPEED	15.0	53.	.48	260.
					IDLE DR.		45.	.08	82.
					IDLE NEU.		28.	.05	54.
7010	1976	TOYO	TRUC	140	HI SPEED	21.0	20.	.05	1800.
					LO SPEED	9.0	15.	.06	800.
					IDLE DR.		0.	0.00	0.
					IDLE NEU.		20.	.22	24.
7011	1975	CHEV	C10	350	HI SPEED	31.0	24.	.55	920.
					LO SPEED	15.0	10.	.16	260.
					IDLE DR.		6.	0.00	195.
					IDLE NEU.		8.	0.00	68.
7012	1975	CHEV	TRUC	350	HI SPEED	31.0	10.	.01	1575.
					LO SPEED	15.0	24.	.02	820.
					IDLE DR.		80.	1.80	62.
					IDLE NEU.		70.	1.60	44.
7013	1975	CHEV	G10V	350	HI SPEED	31.0	12.	0.00	680.
					LO SPEED	15.0	10.	0.00	420.
					IDLE DR.		15.	0.00	64.
					IDLE NEU.		23.	0.00	18.
7014	1975	DODG	C100	318	HI SPEED	26.0	6.	0.00	3500.
					LO SPEED	12.0	7.	0.00	2500.
					IDLE DR.		9.	.09	130.
					IDLE NEU.		10.	.07	74.

APPENDIX 4

LISTING OF FEDERAL THREE MODE EMISSION
RESULTS ON INDIVIDUAL VEHICLES

ST. LOUIS

VEHICLE NUMBER	YEAR	MAKE	MODEL	CID	MODE	RLHP	HC	CO	NO
7015	1975	FORD	F100	302	HI SPEED	26.0	7.	.01	615.
					LO SPEED	12.0	6.	0.00	395.
					IDLE DR.		5.	0.00	89.
					IDLE NEU.		6.	0.00	53.
7016	1975	FORD	F100	300	HI SPEED	31.0	7.	.02	480.
					LO SPEED	15.0	5.	0.00	600.
					IDLE DR.		6.	0.00	55.
					IDLE NEU.		6.	0.00	40.
7017	1975	FORD	F100	360	HI SPEED	31.0	8.	.03	590.
					LO SPEED	15.0	12.	.15	260.
					IDLE DR.		15.	.44	38.
					IDLE NEU.		12.	.24	35.
6018	1976	AMC	HORN	258	HI SPEED	26.0	15.	.03	1900.
					LO SPEED	12.0	25.	.03	2200.
					IDLE DR.		40.	.26	210.
					IDLE NEU.		30.	.20	98.
6019	1976	BUIC	STAW	350	HI SPEED	31.0	12.	.01	200.
					LO SPEED	15.0	7.	0.00	1150.
					IDLE DR.		6.	0.00	140.
					IDLE NEU.		8.	0.00	68.
6020	1976	BUIC	SKYL	231	HI SPEED	26.0	6.	0.00	1200.
					LO SPEED	12.0	12.	0.00	950.
					IDLE DR.		55.	4.40	200.
					IDLE NEU.		40.	3.80	62.
6021	1976	CADI	ELDO	500	HI SPEED	36.0	12.	.01	810.
					LO SPEED	18.0	16.	.01	590.
					IDLE DR.		110.	1.75	86.
					IDLE NEU.		135.	1.60	52.
6022	1976	CHEV	IMPA	350	HI SPEED	31.0	7.	.01	1350.
					LO SPEED	15.0	7.	0.00	530.
					IDLE DR.		7.	0.00	415.
					IDLE NEU.		7.	0.00	105.
6023	1976	CHEV	MONT	350	HI SPEED	31.0	16.	.03	1500.
					LO SPEED	15.0	16.	.01	460.
					IDLE DR.		14.	.01	420.
					IDLE NEU.		14.	0.00	85.
6024	1976	CHEV	VEGA	140	HI SPEED	26.0	5.	0.00	1650.
					LO SPEED	12.0	6.	0.00	1350.
					IDLE DR.		32.	.90	44.
					IDLE NEU.		27.	.80	36.

APPENDIX M

LISTING OF FEDERAL THREE MODE EMISSION
RESULTS ON INDIVIDUAL VEHICLES

ST. LOUIS

VEHICLE NUMBER	YEAR	MAKE	MODEL	CID	MODE	PLHP	HC	CO	NO
6025	1976	CHEV	STAW	400	HI SPEED	36.0	15.	0.00	1700.
					LO SPEED	18.0	15.	0.00	640.
					IDLE DR.		75.	.60	130.
					IDLE NEU.		60.	.50	58.
6026	1976	CHEV	ELCA	305	HI SPEED	31.0	4.	0.00	2700.
					LO SPEED	15.0	4.	0.00	1000.
					IDLE DR.		6.	0.00	175.
					IDLE NEU.		7.	0.00	90.
6027	1976	CHEV	NOVA	250	HI SPEED	26.0	6.	.01	400.
					LO SPEED	12.0	7.	.01	840.
					IDLE DR.		0.	0.00	0.
					IDLE NEU.		21.	.28	56.
6029	1976	DODG	STAW	318	HI SPEED	31.0	25.	.09	2400.
					LO SPEED	15.0	30.	.09	1900.
					IDLE DR.		165.	1.75	50.
					IDLE NEU.		200.	1.50	26.
6030	1976	DODG	ASPE	225	HI SPEED	26.0	16.	.02	1725.
					LO SPEED	12.0	17.	.01	1025.
					IDLE DR.		70.	.90	95.
					IDLE NEU.		105.	.80	55.
6031	1976	FORD	MUST	140	HI SPEED	26.0	20.	.26	840.
					LO SPEED	12.0	35.	.36	600.
					IDLE DR.		27.	0.00	60.
					IDLE NEU.		30.	0.00	42.
6032	1976	FORD	STAW	400	HI SPEED	36.0	22.	.06	520.
					LO SPEED	18.0	20.	0.00	420.
					IDLE DR.		260.	4.80	32.
					IDLE NEU.		520.	4.60	21.
6033	1976	FORD	STAW	351	HI SPEED	31.0	12.	0.00	400.
					LO SPEED	15.0	12.	0.00	400.
					IDLE DR.		14.	0.00	320.
					IDLE NEU.		35.	0.00	80.
6034	1976	FORD	GRAN	250	HI SPEED	26.0	17.	.01	630.
					LO SPEED	12.0	18.	0.00	220.
					IDLE DR.		23.	0.00	35.
					IDLE NEU.		14.	0.00	27.
6035	1976	FORD	GRAN	302	HI SPEED	26.0	23.	.01	640.
					LO SPEED	12.0	14.	0.00	500.
					IDLE DR.		15.	0.00	44.
					IDLE NEU.		14.	0.00	45.

APPENDIX M

LISTING OF FEDERAL THREE MODE EMISSION
RESULTS ON INDIVIDUAL VEHICLES

ST. LOUIS

VEHICLE NUMBER	YEAR	MAKE	MODEL	CID	MODE	RLHP	HC	CO	NO
6036	1976	FORD	TORI	351	HI SPEED	31.0	25.	.01	550.
					LO SPEED	15.0	20.	0.00	400.
					IDLE DR.		20.	0.00	60.
					IDLE NEU.		25.	0.00	40.
6037	1976	MERC	COME	250	HI SPEED	26.0	15.	0.00	860.
					LO SPEED	12.0	18.	0.00	300.
					IDLE DR.		20.	0.00	28.
					IDLE NEU.		15.	0.00	22.
6038	1976	MERC	MONA	200	HI SPEED	26.0	10.	0.00	800.
					LO SPEED	12.0	15.	0.00	300.
					IDLE DR.		15.	0.00	75.
					IDLE NEU.		10.	0.00	35.
6039	1976	OLDS	CUTL	260	HI SPEED	31.0	4.	0.00	850.
					LO SPEED	15.0	4.	0.00	330.
					IDLE DR.		5.	0.00	585.
					IDLE NEU.		4.	0.00	115.
6040	1976	OLDS	CUTL	350	HI SPEED	31.0	23.	.01	780.
					LO SPEED	15.0	22.	.01	550.
					IDLE DR.		175.	2.30	22.
					IDLE NEU.		290.	2.15	20.
6041	1976	OLDS	DELT	455	HI SPEED	31.0	34.	.05	820.
					LO SPEED	15.0	28.	.04	470.
					IDLE DR.		280.	2.64	9.
					IDLE NEU.		750.	3.95	6.
6042	1976	PLYM	DUST	225	HI SPEED	26.0	14.	.01	1150.
					LO SPEED	12.0	20.	0.00	640.
					IDLE DR.		0.	0.00	0.
					IDLE NEU.		77.	1.20	39.
6043	1976	PLYM	VOLA	318	HI SPEED	26.0	20.	.01	650.
					LO SPEED	12.0	30.	.01	210.
					IDLE DR.		30.	.03	105.
					IDLE NEU.		65.	.03	60.
6044	1976	PONT	LEMA	350	HI SPEED	31.0	35.	0.00	800.
					LO SPEED	15.0	25.	0.00	250.
					IDLE DR.		25.	0.00	190.
					IDLE NEU.		25.	0.00	44.
6045	1976	PONT	GRNP	400	HI SPEED	31.0	6.	0.00	1000.
					LO SPEED	15.0	4.	.01	860.
					IDLE DR.		5.	.03	57.
					IDLE NEU.		4.	.02	42.

APPENDIX M

LISTING OF FEDERAL THREE MODE EMISSION
RESULTS ON INDIVIDUAL VEHICLES

ST. LOUIS

VEHICLE NUMBER	YEAR	MAKE	MODEL	CID	MODE	RLHP	HC	CO	NO
6046	1976	DATS	B210	85	HI SPEED	21.0	7.	.01	2600.
					LO SPEED	9.0	15.	.01	2500.
					IDLE DR.		0.	0.00	0.
					IDLE NEU.		10.	.09	43.
6047	1976	DATS	B210	85	HI SPEED	21.0	25.	.22	1700.
					LO SPEED	9.0	22.	.25	600.
					IDLE DR.		57.	.35	68.
					IDLE NEU.		35.	.24	6.
6048	1976	TOYO	CORO	97	HI SPEED	21.0	8.	.01	2000.
					LO SPEED	9.0	14.	.01	1700.
					IDLE DR.		6.	.10	37.
					IDLE NEU.		7.	.11	21.
6049	1976	TOYO	CELI	133	HI SPEED	26.0	3.	.01	2500.
					LO SPEED	12.0	4.	.06	1000.
					IDLE DR.		0.	0.00	0.
					IDLE NEU.		2.	.03	25.
6050	1976	VOLK	SEDA	97	HI SPEED	21.0	109.	2.35	4.
					LO SPEED	9.0	120.	1.61	4.
					IDLE DR.		0.	0.00	0.
					IDLE NEU.		105.	1.36	4.
6051	1976	VOLK	RABB	97	HI SPEED	21.0	30.	.08	2700.
					LO SPEED	9.0	33.	.05	1950.
					IDLE DR.		0.	0.00	0.
					IDLE NEU.		16.	.15	49.
6201	1976	AMC	STAW	304	HI SPEED	26.0	15.	0.00	1100.
					LO SPEED	12.0	16.	0.00	890.
					IDLE DR.		12.	0.00	70.
					IDLE NEU.		11.	0.00	54.
6202	1976	AMC	HORN	258	HI SPEED	26.0	6.	.01	600.
					LO SPEED	12.0	10.	.01	980.
					IDLE DR.		10.	.01	250.
					IDLE NEU.		12.	.01	93.
6203	1976	AMC	MATA	304	HI SPEED	31.0	16.	.01	820.
					LO SPEED	15.0	14.	.01	560.
					IDLE DR.		10.	0.00	120.
					IDLE NEU.		8.	0.00	59.
6204	1976	AMC	HORN	232	HI SPEED	26.0	10.	.02	2200.
					LO SPEED	12.0	15.	.03	2300.
					IDLE DR.		0.	0.00	0.
					IDLE NEU.		10.	.12	58.

APPENDIX M

LISTING OF FEDERAL THREE MODE EMISSION
RESULTS ON INDIVIDUAL VEHICLES

ST. LOUIS

VEHICLE NUMBER	YEAR	MAKE	MODEL	CID	MODE	RLHP	HC	CO	NO
6205	1976	BUIC	CNTY	231	HI SPEED	31.0	31.	.01	2550.
					LO SPEED	15.0	27.	.02	2000.
					IDLE DR.		205.	4.15	64.
					IDLE NEU.		188.	3.70	41.
6206	1976	BUIC	LASA	350	HI SPEED	31.0	9.	0.00	1525.
					LO SPEED	15.0	7.	0.00	1000.
					IDLE DR.		8.	0.00	150.
					IDLE NEU.		7.	0.00	68.
6207	1976	BUIC	REGA	350	HI SPEED	31.0	8.	.01	800.
					LO SPEED	15.0	8.	0.00	780.
					IDLE DR.		6.	0.00	180.
					IDLE NEU.		8.	0.00	45.
6208	1976	BUIC	STAW	350	HI SPEED	31.0	10.	.01	1600.
					LO SPEED	15.0	12.	.01	740.
					IDLE DR.		7.	0.00	160.
					IDLE NEU.		6.	0.00	60.
6209	1976	BUIC	LESA	350	HI SPEED	31.0	11.	.01	940.
					LO SPEED	15.0	13.	.01	650.
					IDLE DR.		10.	.01	98.
					IDLE NEU.		12.	.01	56.
6210	1976	BUIC	SKYH	231	HI SPEED	26.0	10.	0.00	2100.
					LO SPEED	12.0	40.	.35	650.
					IDLE DR.		70.	.70	80.
					IDLE NEU.		55.	.70	45.
6211	1976	BUIC	SKYL	231	HI SPEED	26.0	11.	0.00	1250.
					LO SPEED	12.0	11.	0.00	350.
					IDLE DR.		9.	0.00	120.
					IDLE NEU.		8.	0.00	40.
6212	1976	CADI	SEVI	350	HI SPEED	31.0	5.	0.00	1450.
					LO SPEED	15.0	4.	0.00	660.
					IDLE DR.		5.	0.00	170.
					IDLE NEU.		3.	0.00	52.
6213	1976	CADI	FLEE	500	HI SPEED	36.0	12.	0.00	550.
					LO SPEED	18.0	12.	0.00	450.
					IDLE DR.		65.	.46	98.
					IDLE NEU.		100.	.37	35.
6215	1976	CADI	DEVI	500	HI SPEED	36.0	7.	0.00	350.
					LO SPEED	18.0	9.	0.00	310.
					IDLE DR.		7.	0.00	250.
					IDLE NEU.		9.	0.00	80.

APPENDIX M

LISTING OF FEDERAL THREE MODE EMISSION
RESULTS ON INDIVIDUAL VEHICLES

ST. LOUIS

VEHICLE NUMBER	YEAR	MAKE	MODEL	CID	MODE	RLHP	HC	CO	NO
6216	1976	CHEV	CHET	97	HI SPEED	21.0	30.	.03	2400.
					LO SPEED	9.0	18.	0.00	2200.
					IDLE DR.		0.	0.00	0.
					IDLE NEU.		210.	2.40	2.
6217	1976	CHEV	CAPR	350	HI SPEED	31.0	10.	0.00	800.
					LO SPEED	15.0	12.	0.00	520.
					IDLE DR.		50.	1.45	26.
					IDLE NEU.		58.	1.35	18.
6218	1976	CHEV	MONT	350	HI SPEED	31.0	6.	0.00	1100.
					LO SPEED	15.0	6.	0.00	510.
					IDLE DR.		7.	0.00	135.
					IDLE NEU.		7.	0.00	40.
6219	1976	CHEV	STAW	350	HI SPEED	31.0	7.	0.00	1650.
					LO SPEED	15.0	7.	.01	440.
					IDLE DR.		20.	.30	120.
					IDLE NEU.		20.	.22	40.
6220	1976	CHEV	CAMA	250	HI SPEED	26.0	6.	0.00	450.
					LO SPEED	12.0	5.	0.00	400.
					IDLE DR.		5.	0.00	310.
					IDLE NEU.		6.	0.00	67.
6221	1976	CHEV	STAW	350	HI SPEED	31.0	0.	0.00	1250.
					LO SPEED	15.0	0.	0.00	420.
					IDLE DR.		0.	0.00	52.
					IDLE NEU.		0.	0.00	30.
6222	1976	CHEV	CAMA	305	HI SPEED	31.0	20.	.05	3175.
					LO SPEED	15.0	16.	0.00	2250.
					IDLE DR.		98.	1.20	62.
					IDLE NEU.		103.	1.10	38.
6223	1976	CHEV	CAPR	454	HI SPEED	31.0	6.	0.00	300.
					LO SPEED	15.0	7.	0.00	120.
					IDLE DR.		10.	0.00	14.
					IDLE NEU.		8.	0.00	11.
6224	1976	CHEV	MONT	350	HI SPEED	31.0	14.	.01	1750.
					LO SPEED	15.0	10.	0.00	520.
					IDLE DR.		38.	.60	54.
					IDLE NEU.		40.	.50	42.
6225	1976	CHEV	IMPA	350	HI SPEED	31.0	20.	.12	900.
					LO SPEED	15.0	14.	.02	220.
					IDLE DR.		12.	.01	160.
					IDLE NEU.		10.	.01	58.

APPENDIX M

LISTING OF FEDERAL THREE MODE EMISSION
RESULTS ON INDIVIDUAL VEHICLES

ST. LOUIS

VEHICLE NUMBER	YEAR	MAKE	MODEL	CID	MODE	FLHP	HC	CO	NO
6226	1976	CHEV	CAMA	305	HI SPEED	31.0	4.	.02	1200.
					LO SPEED	15.0	5.	0.00	800.
					IDLE DR.		3.	0.00	220.
					IDLE NEU.		3.	0.00	75.
6227	1976	CHEV	MONT	350	HI SPEED	31.0	10.	0.00	2000.
					LO SPEED	15.0	10.	0.00	1300.
					IDLE DR.		10.	0.00	60.
					IDLE NEU.		10.	0.00	50.
6228	1976	CHEV	VEGA	140	HI SPEED	21.0	5.	0.00	2050.
					LO SPEED	9.0	4.	0.00	580.
					IDLE DR.		0.	0.00	0.
					IDLE NEU.		5.	.06	66.
6229	1976	CHEV	MONZ	140	HI SPEED	26.0	12.	.08	820.
					LO SPEED	12.0	12.	0.00	620.
					IDLE DR.		0.	0.00	0.
					IDLE NEU.		36.	.60	53.
6230	1976	CHEV	MONT	350	HI SPEED	31.0	24.	0.00	1325.
					LO SPEED	15.0	21.	0.00	480.
					IDLE DR.		15.	0.00	160.
					IDLE NEU.		22.	0.00	48.
6231	1976	CHEV	CAMA	350	HI SPEED	31.0	52.	.45	1575.
					LO SPEED	15.0	60.	.75	500.
					IDLE DR.		82.	1.00	66.
					IDLE NEU.		80.	.90	40.
6232	1976	CHEV	CAMA	305	HI SPEED	31.0	20.	1.00	1600.
					LO SPEED	15.0	13.	0.00	790.
					IDLE DR.		10.	0.00	75.
					IDLE NEU.		10.	0.00	36.
6233	1976	CHEV	MALI	350	HI SPEED	31.0	3.	0.00	1400.
					LO SPEED	15.0	3.	0.00	330.
					IDLE DR.		3.	0.00	68.
					IDLE NEU.		3.	0.00	34.
6234	1976	CHEV	NOVA	305	HI SPEED	26.0	10.	.03	1650.
					LO SPEED	12.0	6.	.01	750.
					IDLE DR.		25.	.24	92.
					IDLE NEU.		35.	.20	44.
6235	1976	CHEV	CHET	140	HI SPEED	21.0	8.	.13	1600.
					LO SPEED	9.0	5.	.01	1425.
					IDLE DR.		5.	0.00	420.
					IDLE NEU.		4.	0.00	415.

APPENDIX M

LISTING OF FEDERAL THREE MODE EMISSION
RESULTS ON INDIVIDUAL VEHICLES

ST. LOUIS

VEHICLE NUMBER	YEAR	MAKE	MODEL	CID	MODE	RLHP	HC	CO	NO
6236	1976	CHEV	IMPA	350	HI SPEED	31.0	12.	.01	1750.
					LO SPEED	15.0	10.	0.00	820.
					IDLE DR.		7.	0.00	220.
					IDLE NEU.		8.	0.00	82.
6237	1976	CHEV	MALI	305	HI SPEED	31.0	5.	0.00	1900.
					LO SPEED	15.0	5.	0.00	590.
					IDLE DR.		5.	0.00	300.
					IDLE NEU.		5.	0.00	85.
6238	1976	CHEV	VEGA	140	HI SPEED	26.0	7.	0.00	1650.
					LO SPEED	12.0	7.	0.00	1200.
					IDLE DR.		6.	0.00	290.
					IDLE NEU.		6.	0.00	93.
6239	1976	CHEV	NOVA	250	HI SPEED	26.0	8.	0.00	190.
					LO SPEED	12.0	9.	0.00	120.
					IDLE DR.		8.	0.00	150.
					IDLE NEU.		8.	0.00	27.
6240	1976	CHRY	CORD	318	HI SPEED	31.0	5.	0.00	3100.
					LO SPEED	15.0	8.	0.00	2600.
					IDLE DR.		10.	.02	88.
					IDLE NEU.		10.	.01	36.
6241	1976	CHRY	NEWY	400	HI SPEED	36.0	13.	.02	760.
					LO SPEED	18.0	15.	.03	300.
					IDLE DR.		28.	.60	115.
					IDLE NEU.		6.	.55	67.
6242	1976	DODG	CHAR	360	HI SPEED	31.0	32.	.40	1500.
					LO SPEED	15.0	35.	.31	1400.
					IDLE DR.		75.	1.80	39.
					IDLE NEU.		120.	2.10	20.
6243	1976	DODG	MONA	400	HI SPEED	31.0	6.	.03	260.
					LO SPEED	15.0	9.	.05	310.
					IDLE DR.		14.	.04	60.
					IDLE NEU.		20.	.05	36.
6244	1976	DODG	ASPE	225	HI SPEED	26.0	14.	.01	1000.
					LO SPEED	12.0	18.	.01	800.
					IDLE DR.		22.	.02	280.
					IDLE NEU.		16.	.02	83.
6245	1976	DODG	MONA	360	HI SPEED	31.0	12.	.01	1950.
					LO SPEED	15.0	14.	0.00	1625.
					IDLE DR.		48.	1.25	68.
					IDLE NEU.		45.	1.30	52.

APPENDIX M

LISTING OF FEDERAL THREE MODE EMISSION
RESULTS ON INDIVIDUAL VEHICLES

ST. LOUIS

VEHICLE NUMBER	YEAR	MAKE	MODEL	CID	MODE	RLHP	HC	CO	NO
6246	1976	DODG	STAW	225	HI SPEED	31.0	6.	.01	980.
					LO SPEED	15.0	8.	.01	540.
					IDLE DR.		12.	.01	220.
					IDLE NEU.		28.	.02	74.
6247	1976	DODG	ASPE	225	HI SPEED	26.0	38.	.43	950.
					LO SPEED	12.0	48.	.40	640.
					IDLE DR.		105.	1.00	54.
					IDLE NEU.		110.	.85	37.
6248	1976	FORD	STAW	400	HI SPEED	36.0	4.	.01	1250.
					LO SPEED	18.0	3.	0.00	820.
					IDLE DR.		4.	0.00	560.
					IDLE NEU.		3.	0.00	160.
6249	1976	FORD	ELIT	351	HI SPEED	31.0	55.	.10	790.
					LO SPEED	15.0	70.	.10	850.
					IDLE DR.		65.	.10	150.
					IDLE NEU.		150.	.06	60.
6250	1976	FORD	MAVE	200	HI SPEED	26.0	12.	.03	400.
					LO SPEED	12.0	20.	.01	125.
					IDLE DR.		25.	0.00	68.
					IDLE NEU.		20.	0.00	19.
6251	1976	FORD	THUN	460	HI SPEED	36.0	12.	.01	680.
					LO SPEED	18.0	11.	.01	520.
					IDLE DR.		10.	0.00	175.
					IDLE NEU.		9.	0.00	88.
6252	1976	FORD	MUST	140	HI SPEED	26.0	5.	.01	1175.
					LO SPEED	12.0	5.	0.00	380.
					IDLE DR.		0.	0.00	0.
					IDLE NEU.		5.	0.00	42.
6253	1976	FORD	MAVE	250	HI SPEED	26.0	10.	0.00	200.
					LO SPEED	12.0	9.	0.00	100.
					IDLE DR.		8.	0.00	82.
					IDLE NEU.		12.	0.00	14.
6254	1976	FORD	GRAN	302	HI SPEED	26.0	32.	0.00	430.
					LO SPEED	12.0	33.	0.00	235.
					IDLE DR.		27.	0.00	180.
					IDLE NEU.		70.	0.00	87.
6255	1976	FORD	PINT	140	HI SPEED	21.0	23.	.01	1675.
					LO SPEED	9.0	22.	.01	1450.
					IDLE DR.		0.	0.00	0.
					IDLE NEU.		10.	.01	36.

APPENDIX M

LISTING OF FEDERAL THREE MODE EMISSION
RESULTS ON INDIVIDUAL VEHICLES

ST. LOUIS

VEHICLE NUMBER	YEAR	MAKE	MODEL	CID	MODE	RLHP	HC	CO	NO
6256	1976	FORD	ELIT	351	HI SPEED	31.0	60.	.08	950.
					LO SPEED	15.0	70.	.05	900.
					IDLE DR.		65.	.05	200.
					IDLE NEU.		150.	.13	80.
6257	1976	FORD	STAW	140	HI SPEED	26.0	8.	.01	1175.
					LO SPEED	12.0	10.	0.00	530.
					IDLE DR.		7.	0.00	58.
					IDLE NEU.		5.	0.00	41.
6258	1976	FORD	GRAN	250	HI SPEED	26.0	5.	0.00	720.
					LO SPEED	12.0	6.	0.00	390.
					IDLE DR.		5.	0.00	44.
					IDLE NEU.		4.	0.00	38.
6259	1976	FORD	PINT	140	HI SPEED	21.0	6.	0.00	1000.
					LO SPEED	9.0	6.	0.00	500.
					IDLE DR.		0.	0.00	0.
					IDLE NEU.		6.	0.00	40.
6260	1976	FORD	STAW	400	HI SPEED	36.0	13.	.05	420.
					LO SPEED	18.0	10.	.01	440.
					IDLE DR.		136.	2.10	26.
					IDLE NEU.		80.	2.00	16.
6261	1976	FORD	LTD	351	HI SPEED	31.0	5.	0.00	2900.
					LO SPEED	15.0	4.	0.00	2000.
					IDLE DR.		16.	.38	100.
					IDLE NEU.		15.	.33	63.
6262	1976	FORD	THUN	460	HI SPEED	36.0	10.	.01	3000.
					LO SPEED	18.0	10.	0.00	2300.
					IDLE DR.		22.	.90	36.
					IDLE NEU.		60.	1.00	24.
6263	1976	FORD	MUST	171	HI SPEED	26.0	27.	.07	1600.
					LO SPEED	12.0	22.	.02	590.
					IDLE DR.		12.	0.00	60.
					IDLE NEU.		9.	0.00	46.
6264	1976	FORD	ELIT	400	HI SPEED	31.0	24.	0.00	1050.
					LO SPEED	15.0	20.	0.00	900.
					IDLE DR.		32.	.70	38.
					IDLE NEU.		75.	1.80	28.
6265	1976	FORD	ELIT	351	HI SPEED	31.0	28.	.05	1000.
					LO SPEED	15.0	30.	.04	1150.
					IDLE DR.		24.	.03	105.
					IDLE NEU.		32.	.03	58.

APPENDIX M

LISTING OF FEDERAL THREE MODE EMISSION
RESULTS ON INDIVIDUAL VEHICLES

ST. LOUIS

VEHICLE NUMBER	YEAR	MAKE	MODEL	CID	MODE	RLHP	HC	CO	NO
6266	1976	FORD	GRAN	302	HI SPEED	26.0	43.	.01	320.
					LO SPEED	12.0	42.	0.00	245.
					IDLE DR.		32.	0.00	32.
					IDLE NEU.		72.	0.00	49.
6267	1976	FORD	PINT	140	HI SPEED	26.0	5.	0.00	180.
					LO SPEED	12.0	4.	0.00	62.
					IDLE DR.		3.	0.00	6.
					IDLE NEU.		3.	0.00	4.
6268	1976	LINC	MRK4	460	HI SPEED	36.0	6.	.04	185.
					LO SPEED	18.0	7.	0.00	175.
					IDLE DR.		7.	0.00	260.
					IDLE NEU.		8.	0.00	78.
6270	1976	MERC	MONG	351	HI SPEED	31.0	24.	.03	890.
					LO SPEED	15.0	25.	.05	910.
					IDLE DR.		23.	.47	59.
					IDLE NEU.		23.	.55	41.
6271	1976	MERC	MARQ	400	HI SPEED	31.0	36.	.75	620.
					LO SPEED	15.0	15.	.12	440.
					IDLE DR.		24.	.09	160.
					IDLE NEU.		57.	.08	68.
6272	1976	MERC	COUG	351	HI SPEED	31.0	14.	.01	590.
					LO SPEED	15.0	16.	.01	520.
					IDLE DR.		126.	2.40	28.
					IDLE NEU.		40.	.01	52.
6273	1976	MERC	STAW	400	HI SPEED	36.0	6.	.04	600.
					LO SPEED	18.0	20.	.01	280.
					IDLE DR.		20.	0.00	125.
					IDLE NEU.		85.	0.00	16.
6274	1976	MERC	MONA	302	HI SPEED	26.0	26.	.03	460.
					LO SPEED	12.0	25.	.01	320.
					IDLE DR.		15.	.01	36.
					IDLE NEU.		12.	0.00	33.
6275	1976	OLDS	CUTL	350	HI SPEED	31.0	30.	.02	3400.
					LO SPEED	15.0	15.	.01	3150.
					IDLE DR.		55.	.39	320.
					IDLE NEU.		106.	.30	58.
6276	1976	OLDS	CUTL	350	HI SPEED	31.0	15.	0.00	270.
					LO SPEED	15.0	16.	0.00	190.
					IDLE DR.		13.	0.00	25.
					IDLE NEU.		16.	0.00	27.

APPENDIX M

LISTING OF FEDERAL THREE MODE EMISSION
RESULTS ON INDIVIDUAL VEHICLES

ST. LOUIS

VEHICLE NUMBER	YEAR	MAKE	MODEL	CID	MODE	RLHP	HC	CO	NO
6277	1976	OLDS	OMEG	250	HI SPEED	26.0	5.	0.00	900.
					LO SPEED	12.0	5.	0.00	580.
					IDLE DR.		8.	.18	10.
					IDLE NEU.		15.	.22	10.
6279	1976	OLDS	STAW	455	HI SPEED	36.0	10.	.01	320.
					LO SPEED	18.0	10.	0.00	205.
					IDLE DR.		55.	.50	54.
					IDLE NEU.		78.	.75	35.
6280	1976	OLDS	CUTL	350	HI SPEED	31.0	6.	0.00	1650.
					LO SPEED	15.0	7.	0.00	480.
					IDLE DR.		35.	.45	70.
					IDLE NEU.		40.	.44	43.
6281	1976	OLDS	CUTL	350	HI SPEED	31.0	15.	0.00	580.
					LO SPEED	15.0	15.	0.00	210.
					IDLE DR.		100.	1.50	32.
					IDLE NEU.		140.	1.30	14.
6282	1976	OLDS	CUTL	350	HI SPEED	31.0	8.	0.00	1450.
					LO SPEED	15.0	7.	0.00	480.
					IDLE DR.		35.	.32	180.
					IDLE NEU.		27.	.28	60.
6283	1976	OLDS	NINE	455	HI SPEED	36.0	13.	.01	940.
					LO SPEED	18.0	15.	0.00	390.
					IDLE DR.		14.	0.00	140.
					IDLE NEU.		28.	0.00	63.
6284	1976	PLYM	VOLA	318	HI SPEED	26.0	12.	.01	410.
					LO SPEED	12.0	20.	.01	260.
					IDLE DR.		110.	1.70	54.
					IDLE NEU.		140.	1.40	40.
6285	1976	PLYM	STAW	318	HI SPEED	31.0	16.	.02	1300.
					LO SPEED	15.0	18.	.02	620.
					IDLE DR.		60.	.25	140.
					IDLE NEU.		50.	.08	30.
6286	1976	PLYM	FURY	318	HI SPEED	31.0	10.	0.00	820.
					LO SPEED	15.0	15.	.01	540.
					IDLE DR.		15.	.02	220.
					IDLE NEU.		28.	.02	92.
6287	1976	PLYM	VOLA	225	HI SPEED	26.0	10.	.01	1975.
					LO SPEED	12.0	14.	0.00	1600.
					IDLE DR.		45.	.65	28.
					IDLE NEU.		65.	.60	18.

APPENDIX M

LISTING OF FEDERAL THREE MODE EMISSION
RESULTS ON INDIVIDUAL VEHICLES

ST. LOUIS

VEHICLE NUMBER	YEAR	MAKE	MODEL	CID	MODE	RLHP	HC	CO	NO
6288	1976	PLYM	STAW	400	HI SPEED	36.0	10.	.06	1100.
					LO SPEED	18.0	8.	0.00	1000.
					IDLE DR.		40.	.75	75.
					IDLE NEU.		35.	.95	58.
6289	1976	PLYM	STAW	225	HI SPEED	31.0	12.	.02	1500.
					LO SPEED	15.0	22.	.12	620.
					IDLE DR.		90.	.70	105.
					IDLE NEU.		101.	.80	65.
6290	1976	PLYM	STAW	225	HI SPEED	31.0	16.	.18	280.
					LO SPEED	15.0	30.	.23	200.
					IDLE DR.		75.	1.60	13.
					IDLE NEU.		90.	1.45	9.
6291	1976	PONT	SUNB	231	HI SPEED	26.0	6.	0.00	2100.
					LO SPEED	12.0	10.	.01	820.
					IDLE DR.		32.	.90	54.
					IDLE NEU.		33.	.85	34.
6292	1976	PONT	BONN	400	HI SPEED	31.0	4.	0.00	1500.
					LO SPEED	15.0	5.	0.00	1300.
					IDLE DR.		6.	0.00	125.
					IDLE NEU.		15.	0.00	65.
6293	1976	PONT	GRNP	350	HI SPEED	31.0	13.	.01	1450.
					LO SPEED	15.0	12.	.01	900.
					IDLE DR.		9.	0.00	180.
					IDLE NEU.		19.	0.00	70.
6294	1976	PONT	LEMA	260	HI SPEED	31.0	6.	0.00	1600.
					LO SPEED	15.0	5.	0.00	1000.
					IDLE DR.		5.	0.00	580.
					IDLE NEU.		5.	0.00	140.
6295	1976	PONT	CATA	455	HI SPEED	31.0	13.	.01	550.
					LO SPEED	15.0	20.	.16	215.
					IDLE DR.		125.	1.20	10.
					IDLE NEU.		175.	1.10	8.
6296	1976	PONT	FIRE	350	HI SPEED	31.0	10.	.14	2000.
					LO SPEED	15.0	6.	.02	1150.
					IDLE DR.		45.	.30	180.
					IDLE NEU.		40.	.26	45.
6297	1976	PONT	GRNP	350	HI SPEED	31.0	14.	.01	2000.
					LO SPEED	15.0	12.	0.00	1550.
					IDLE DR.		7.	0.00	97.
					IDLE NEU.		5.	0.00	81.

APPENDIX M

LISTING OF FEDERAL THREE MODE EMISSION
RESULTS ON INDIVIDUAL VEHICLES

ST. LOUIS

VEHICLE NUMBER	YEAR	MAKE	MODEL	CID	MODE	RLHP	HC	CO	NO
6298	1976	PONT	VENT	250	HI SPEED	26.0	12.	0.00	200.
					LO SPEED	12.0	17.	0.00	620.
					IDLE DR.		80.	.70	36.
					IDLE NEU.		85.	.60	18.
6299	1976	CAPR	COUP	171	HI SPEED	26.0	45.	.15	950.
					LO SPEED	12.0	55.	.21	1200.
					IDLE DR.		0.	0.00	0.
					IDLE NEU.		18.	.03	45.
6300	1976	DODG	COLT	98	HI SPEED	21.0	4.	.01	1950.
					LO SPEED	9.0	4.	.01	1175.
					IDLE DR.		0.	0.00	0.
					IDLE NEU.		2.	.04	68.
6301	1976	DATS	B210	85	HI SPEED	21.0	7.	.02	2050.
					LO SPEED	9.0	5.	.01	590.
					IDLE DR.		0.	0.00	0.
					IDLE NEU.		7.	.03	37.
6302	1976	DATS	STAW	119	HI SPEED	21.0	35.	.22	2000.
					LO SPEED	9.0	40.	.10	1200.
					IDLE DR.		0.	0.00	0.
					IDLE NEU.		30.	.50	12.
6303	1976	DATS	B210	85	HI SPEED	21.0	21.	.20	2375.
					LO SPEED	9.0	70.	.04	2800.
					IDLE DR.		0.	0.00	0.
					IDLE NEU.		35.	.55	32.
6304	1976	FIAT	128	79	HI SPEED	21.0	32.	.40	1700.
					LO SPEED	9.0	45.	.05	650.
					IDLE DR.		0.	0.00	0.
					IDLE NEU.		58.	.37	38.
6305	1976	FIAT	131	107	HI SPEED	21.0	9.	.26	440.
					LO SPEED	9.0	10.	.12	100.
					IDLE DR.		0.	0.00	0.
					IDLE NEU.		16.	.16	48.
6306	1976	HOND	CIVI	76	HI SPEED	21.0	45.	.40	2300.
					LO SPEED	9.0	16.	.20	820.
					IDLE DR.		0.	0.00	0.
					IDLE NEU.		24.	.32	70.
6307	1976	HOND	ACCO	98	HI SPEED	21.0	9.	.01	1800.
					LO SPEED	9.0	8.	.01	1950.
					IDLE DR.		0.	0.00	0.
					IDLE NEU.		12.	.01	73.

APPENDIX M

LISTING OF FEDERAL THREE MODE EMISSION
RESULTS ON INDIVIDUAL VEHICLES

ST. LOUIS

VEHICLE NUMBER	YEAR	MAKE	MODEL	CID	MODE	RLHP	HC	CO	NO
6308	1976	MAZD	RX4	80	HI SPEED	26.0	7.	.03	1100.
					LO SPEED	12.0	12.	.08	820.
					IDLE DR.		0.	0.00	0.
					IDLE NEU.		10.	.02	26.
6309	1976	TOYO	CORO	97	HI SPEED	21.0	43.	.11	2450.
					LO SPEED	9.0	33.	.24	1150.
					IDLE DR.		0.	0.00	0.
					IDLE NEU.		22.	.22	24.
6310	1976	TOYO	CORO	97	HI SPEED	21.0	6.	.02	1250.
					LO SPEED	9.0	16.	.02	1950.
					IDLE DR.		6.	.12	51.
					IDLE NEU.		5.	.08	38.
6311	1976	TOYO	CELI	133	HI SPEED	26.0	2.	0.00	1800.
					LO SPEED	12.0	3.	0.00	740.
					IDLE DR.		0.	0.00	0.
					IDLE NEU.		2.	0.00	46.
6312	1976	TOYO	CORO	97	HI SPEED	21.0	8.	.07	1450.
					LO SPEED	9.0	15.	.05	1175.
					IDLE DR.		18.	.35	48.
					IDLE NEU.		14.	.24	35.
6313	1976	VOLK	RABB	97	HI SPEED	21.0	22.	.12	1800.
					LO SPEED	9.0	24.	.18	720.
					IDLE DR.		0.	0.00	0.
					IDLE NEU.		16.	.11	37.
6314	1976	VOLK	RABB	97	HI SPEED	21.0	5.	0.00	2100.
					LO SPEED	9.0	4.	0.00	1400.
					IDLE DR.		5.	0.00	125.
					IDLE NEU.		5.	0.00	82.
6315	1976	VOLK	RABB	97	HI SPEED	21.0	8.	.01	1550.
					LO SPEED	9.0	6.	.01	840.
					IDLE DR.		0.	0.00	0.
					IDLE NEU.		5.	0.00	51.
6316	1976	VOLV	264G	163	HI SPEED	26.0	26.	.22	1100.
					LO SPEED	12.0	20.	.12	500.
					IDLE DR.		36.	.26	59.
					IDLE NEU.		25.	.22	40.
5052	1975	AMC	GREM	258	HI SPEED	26.0	6.	.01	800.
					LO SPEED	12.0	5.	.01	320.
					IDLE DR.		16.	.34	175.
					IDLE NEU.		16.	.32	100.

APPENDIX M

LISTING OF FEDERAL THREE MODE EMISSION
RESULTS ON INDIVIDUAL VEHICLES

ST. LOUIS

VEHICLE NUMBER	YEAR	MAKE	MODEL	CID	MODE	RLHP	HC	CO	NO
5053	1975	BUIC	STAW	350	HI SPEED	31.0	5.	0.00	280.
					LO SPEED	15.0	7.	0.00	110.
					IDLE DR.		6.	0.00	32.
					IDLE NEU.		8.	0.00	15.
5054	1975	BUIC	ELEC	455	HI SPEED	36.0	10.	.03	640.
					LO SPEED	18.0	14.	.04	135.
					IDLE DR.		44.	.60	42.
					IDLE NEU.		38.	.50	28.
5055	1975	CADI	DEVI	500	HI SPEED	36.0	12.	0.00	560.
					LO SPEED	18.0	15.	0.00	520.
					IDLE DR.		20.	.02	150.
					IDLE NEU.		12.	0.00	80.
5056	1975	CHEV	MONZ	140	HI SPEED	26.0	3.	0.00	1500.
					LO SPEED	12.0	4.	0.00	1650.
					IDLE DR.		0.	0.00	0.
					IDLE NEU.		2.	0.00	88.
5057	1975	CHEV	MONT	350	HI SPEED	31.0	5.	0.00	1750.
					LO SPEED	15.0	5.	.01	450.
					IDLE DR.		5.	0.00	140.
					IDLE NEU.		5.	0.00	70.
5058	1975	CHEV	MALI	350	HI SPEED	31.0	55.	0.00	1950.
					LO SPEED	15.0	34.	0.00	930.
					IDLE DR.		12.	0.00	390.
					IDLE NEU.		13.	0.00	85.
5059	1975	CHEV	STAW	400	HI SPEED	36.0	7.	0.00	975.
					LO SPEED	18.0	5.	0.00	540.
					IDLE DR.		7.	0.00	190.
					IDLE NEU.		7.	0.00	52.
5060	1975	CHEV	CAMA	250	HI SPEED	26.0	6.	0.00	500.
					LO SPEED	12.0	6.	0.00	440.
					IDLE DR.		0.	0.00	0.
					IDLE NEU.		30.	.18	35.
5061	1975	CHRY	CORD	360	HI SPEED	31.0	6.	0.00	375.
					LO SPEED	15.0	6.	0.00	200.
					IDLE DR.		8.	.10	10.
					IDLE NEU.		10.	.05	1.
5062	1975	DODG	DART	318	HI SPEED	26.0	12.	0.00	470.
					LO SPEED	12.0	12.	0.00	240.
					IDLE DR.		50.	1.15	66.
					IDLE NEU.		52.	1.00	53.

APPENDIX M

LISTING OF FEDERAL THREE MODE EMISSION
RESULTS ON INDIVIDUAL VEHICLES

ST. LOUIS

VEHICLE NUMBER	YEAR	MAKE	MODEL	CID	MODE	RLHP	HC	CO	NO
5063	1975	FORD	PINT	140	HI SPEED	26.0	14.	.03	420.
					LO SPEED	12.0	13.	.03	170.
					IDLE DR.		0.	0.00	0.
					IDLE NEU.		13.	.34	10.
5064	1975	FORD	MAVE	302	HI SPEED	26.0	5.	.01	1200.
					LO SPEED	12.0	6.	.01	510.
					IDLE DR.		5.	.02	48.
					IDLE NEU.		9.	.01	32.
5065	1975	FORD	LTD	400	HI SPEED	31.0	20.	.16	480.
					LO SPEED	15.0	26.	.08	820.
					IDLE DR.		64.	.49	140.
					IDLE NEU.		50.	.46	62.
5066	1975	FORD	GRAN	250	HI SPEED	26.0	8.	.01	715.
					LO SPEED	12.0	9.	.01	810.
					IDLE DR.		8.	0.00	72.
					IDLE NEU.		8.	0.00	41.
5067	1975	FORD	GRAN	302	HI SPEED	26.0	22.	.01	410.
					LO SPEED	12.0	24.	0.00	250.
					IDLE DR.		20.	0.00	48.
					IDLE NEU.		30.	0.00	24.
5068	1975	MERC	MONG	351	HI SPEED	31.0	12.	.02	165.
					LO SPEED	15.0	15.	.02	200.
					IDLE DR.		24.	.18	44.
					IDLE NEU.		25.	.06	20.
5069	1975	OLDS	CUTL	350	HI SPEED	31.0	7.	.02	300.
					LO SPEED	15.0	6.	0.00	240.
					IDLE DR.		5.	0.00	200.
					IDLE NEU.		5.	0.00	65.
5070	1975	OLDS	98	455	HI SPEED	36.0	15.	.03	780.
					LO SPEED	18.0	24.	.01	720.
					IDLE DR.		95.	1.30	88.
					IDLE NEU.		160.	1.60	40.
5071	1975	PLYM	VALI	225	HI SPEED	26.0	34.	.22	1000.
					LO SPEED	12.0	60.	.26	1650.
					IDLE DR.		138.	2.80	46.
					IDLE NEU.		135.	2.60	34.
5072	1975	PLYM	VALI	318	HI SPEED	26.0	106.	1.20	360.
					LO SPEED	12.0	131.	1.10	420.
					IDLE DR.		21.	.01	83.
					IDLE NEU.		20.	.01	53.

APPENDIX M

LISTING OF FEDERAL THREE MODE EMISSION
RESULTS ON INDIVIDUAL VEHICLES

ST. LOUIS

VEHICLE NUMBER	YEAR	MAKE	MODEL	CID	MODE	RLHP	HC	CO	NO
5073	1975	PONT	CATA	400	HI SPEED	31.0	3.	0.00	1425.
					LO SPEED	15.0	2.	0.00	1300.
					IDLE DR.		3.	.06	53.
					IDLE NEU.		2.	.03	29.
5074	1975	PONT	FIRE	350	HI SPEED	31.0	10.	.04	560.
					LO SPEED	15.0	11.	0.00	340.
					IDLE DR.		50.	.80	17.
					IDLE NEU.		57.	.80	12.
5075	1975	DATS	B210	85	HI SPEED	21.0	21.	.29	1400.
					LO SPEED	9.0	30.	.04	900.
					IDLE DR.		85.	.70	54.
					IDLE NEU.		55.	.50	32.
5076	1975	TOYO	CELI	133	HI SPEED	21.0	10.	.01	3000.
					LO SPEED	9.0	8.	.04	1500.
					IDLE DR.		0.	0.00	0.
					IDLE NEU.		15.	.12	26.
5077	1975	TOYO	CORO	97	HI SPEED	21.0	17.	.08	990.
					LO SPEED	9.0	14.	.14	290.
					IDLE DR.		0.	0.00	0.
					IDLE NEU.		15.	.03	39.
5078	1975	VOLK	SCIR	90	HI SPEED	21.0	8.	.02	410.
					LO SPEED	9.0	5.	0.00	250.
					IDLE DR.		0.	0.00	0.
					IDLE NEU.		5.	0.00	58.
5317	1975	AMC	MATA	304	HI SPEED	31.0	10.	.01	1300.
					LO SPEED	15.0	6.	0.00	500.
					IDLE DR.		5.	0.00	60.
					IDLE NEU.		7.	0.00	48.
5318	1975	BUIC	SKYH	231	HI SPEED	26.0	12.	0.00	780.
					LO SPEED	12.0	15.	0.00	250.
					IDLE DR.		0.	0.00	0.
					IDLE NEU.		50.	1.25	18.
5320	1975	CHEV	MONZ	140	HI SPEED	26.0	6.	.01	1700.
					LO SPEED	12.0	10.	.01	1650.
					IDLE DR.		0.	0.00	0.
					IDLE NEU.		35.	.70	85.
5321	1975	CHEV	IMPA	350	HI SPEED	31.0	6.	0.00	1600.
					LO SPEED	15.0	7.	0.00	600.
					IDLE DR.		6.	0.00	220.
					IDLE NEU.		8.	0.00	56.

APPENDIX A

LISTING OF FEDERAL THREE MODE EMISSION
RESULTS ON INDIVIDUAL VEHICLES

ST. LOUIS

VEHICLE NUMBER	YEAR	MAKE	MODEL	CID	MODE	RLHP	HC	CO	NO
5322	1975	CHEV	STAW	350	HI SPEED	31.0	10.	.01	760.
					LO SPEED	15.0	10.	.08	440.
					IDLE DR.		76.	1.40	66.
					IDLE NEU.		92.	1.20	40.
5323	1975	CHEV	CAMA	350	HI SPEED	31.0	7.	0.00	1550.
					LO SPEED	15.0	6.	0.00	590.
					IDLE DR.		6.	0.00	175.
					IDLE NEU.		6.	0.00	61.
5324	1975	CHEV	IMPA	400	HI SPEED	31.0	8.	0.00	1500.
					LO SPEED	15.0	9.	0.00	1200.
					IDLE DR.		21.	.08	29.
					IDLE NEU.		14.	0.00	26.
5325	1975	DODG	DART	318	HI SPEED	26.0	6.	0.00	1075.
					LO SPEED	12.0	6.	0.00	800.
					IDLE DR.		20.	.31	75.
					IDLE NEU.		20.	.27	62.
5326	1975	FORD	MUST	140	HI SPEED	26.0	65.	.06	950.
					LO SPEED	12.0	45.	.04	800.
					IDLE DR.		50.	1.55	28.
					IDLE NEU.		45.	1.00	28.
5327	1975	FORD	LTD	400	HI SPEED	31.0	6.	.01	1100.
					LO SPEED	15.0	4.	.01	260.
					IDLE DR.		5.	.03	140.
					IDLE NEU.		4.	.01	58.
5328	1975	FORD	LTD	351	HI SPEED	31.0	12.	.02	880.
					LO SPEED	15.0	13.	.03	700.
					IDLE DR.		17.	.03	155.
					IDLE NEU.		35.	.04	82.
5329	1975	LINC	MRK4	460	HI SPEED	36.0	52.	2.30	51.
					LO SPEED	18.0	50.	2.30	36.
					IDLE DR.		38.	.32	88.
					IDLE NEU.		54.	.22	42.
5330	1975	MERC	COUG	351	HI SPEED	31.0	28.	.02	750.
					LO SPEED	15.0	34.	.03	430.
					IDLE DR.		32.	.01	120.
					IDLE NEU.		61.	.02	33.
5331	1975	OLDS	CUTL	260	HI SPEED	31.0	13.	0.00	510.
					LO SPEED	15.0	18.	0.00	390.
					IDLE DR.		13.	0.00	110.
					IDLE NEU.		14.	0.00	24.

APPENDIX M

LISTING OF FEDERAL THREE MODE EMISSION
RESULTS ON INDIVIDUAL VEHICLES

ST. LOUIS

VEHICLE NUMBER	YEAR	MAKE	MODEL	CID	MODE	RLHP	HC	CO	NO
5332	1975	OLDS	CUTL	350	HI SPEED	31.0	0.	0.00	600.
					LO SPEED	15.0	0.	0.00	380.
					IDLE DR.		0.	0.00	95.
					IDLE NEU.		0.	0.00	58.
5333	1975	PLYM	FURY	318	HI SPEED	31.0	8.	.01	1600.
					LO SPEED	15.0	9.	.01	1250.
					IDLE DR.		15.	.28	74.
					IDLE NEU.		15.	.25	59.
5334	1975	PONT	GRNP	400	HI SPEED	31.0	27.	.32	1050.
					LO SPEED	15.0	44.	.60	440.
					IDLE DR.		78.	1.20	61.
					IDLE NEU.		95.	1.10	40.
5335	1975	DATS	710	119	HI SPEED	21.0	10.	.07	1950.
					LO SPEED	9.0	14.	.04	1700.
					IDLE DR.		0.	0.00	0.
					IDLE NEU.		7.	.06	46.
5336	1975	FIAT	131	107	HI SPEED	21.0	3.	.03	620.
					LO SPEED	9.0	5.	.02	380.
					IDLE DR.		5.	.13	48.
					IDLE NEU.		5.	.06	42.
5337	1975	HOND	CVCC	91	HI SPEED	21.0	5.	.01	1900.
					LO SPEED	9.0	5.	.01	780.
					IDLE DR.		0.	0.00	0.
					IDLE NEU.		10.	.04	120.
5338	1975	MAZD	STAW	70	HI SPEED	21.0	7.	0.00	700.
					LO SPEED	9.0	8.	0.00	270.
					IDLE DR.		0.	0.00	0.
					IDLE NEU.		9.	0.00	23.
4080	1974	AMC	AMBA	360	HI SPEED	31.0	1375.	.22	1500.
					LO SPEED	15.0	900.	.18	1250.
					IDLE DR.		1050.	2.00	110.
					IDLE NEU.		1200.	1.30	45.
4081	1974	BUIC	CNTY	350	HI SPEED	31.0	14.	.01	1750.
					LO SPEED	15.0	17.	.05	935.
					IDLE DR.		17.	.22	73.
					IDLE NEU.		11.	.06	40.
4082	1974	CADI	DEVI	472	HI SPEED	36.0	13.	.12	240.
					LO SPEED	18.0	27.	.21	165.
					IDLE DR.		27.	.33	24.
					IDLE NEU.		20.	2.02	18.

APPENDIX M

LISTING OF FEDERAL THREE MODE EMISSION
RESULTS ON INDIVIDUAL VEHICLES

ST. LOUIS

VEHICLE NUMBER	YEAR	MAKE	MODEL	CID	MODE	RLHP	HC	CO	NO
4083	1974	CHEV	VEGA	140	HI SPEED	21.0	183.	.62	2250.
					LO SPEED	9.0	185.	.14	1275.
					IDLE DR.		285.	.35	730.
					IDLE NEU.		250.	1.90	145.
4084	1974	CHEV	CHEL	350	HI SPEED	31.0	75.	.26	860.
					LO SPEED	15.0	127.	.62	270.
					IDLE DR.		175.	.46	40.
					IDLE NEU.		205.	.24	35.
4085	1974	CHEV	NOVA	250	HI SPEED	26.0	100.	.10	890.
					LO SPEED	12.0	190.	.08	450.
					IDLE DR.		330.	5.30	62.
					IDLE NEU.		260.	4.65	50.
4086	1974	CHEV	NOVA	350	HI SPEED	26.0	84.	.18	965.
					LO SPEED	12.0	125.	.75	255.
					IDLE DR.		112.	2.15	53.
					IDLE NEU.		52.	.83	45.
4087	1974	CHEV	CHEL	350	HI SPEED	31.0	37.	.22	880.
					LO SPEED	15.0	47.	.09	210.
					IDLE DR.		95.	.38	140.
					IDLE NEU.		55.	.13	55.
4088	1974	CHEV	STAW	400	HI SPEED	36.0	45.	.80	240.
					LO SPEED	18.0	57.	.81	85.
					IDLE DR.		107.	2.40	16.
					IDLE NEU.		105.	2.50	13.
4089	1974	CHRY	NEWP	400	HI SPEED	31.0	64.	.52	1225.
					LO SPEED	15.0	48.	.08	610.
					IDLE DR.		108.	2.50	33.
					IDLE NEU.		105.	2.60	27.
4090	1974	DODG	CHAR	318	HI SPEED	31.0	11.	.02	1300.
					LO SPEED	15.0	21.	.08	1800.
					IDLE DR.		32.	.52	71.
					IDLE NEU.		28.	.45	55.
4091	1974	FORD	PINT	122	HI SPEED	21.0	27.	.05	540.
					LO SPEED	9.0	35.	.07	360.
					IDLE DR.		0.	0.00	0.
					IDLE NEU.		57.	1.80	25.
4092	1974	FORD	TORI	302	HI SPEED	31.0	65.	.05	1375.
					LO SPEED	15.0	58.	.05	525.
					IDLE DR.		118.	1.03	16.
					IDLE NEU.		85.	.95	7.

APPENDIX M

LISTING OF FEDERAL THREE MODE EMISSION
RESULTS ON INDIVIDUAL VEHICLES

ST. LOUIS

VEHICLE NUMBER	YEAR	MAKE	MODEL	CID	MODE	PLHP	HC	CO	NO
4093	1974	FORD	PINT	140	HI SPEED	21.0	8.	.04	1750.
					LO SPEED	9.0	15.	.06	1200.
					IDLE DR.		27.	.65	23.
					IDLE NEU.		7.	.60	20.
4094	1974	FORD	STAW	400	HI SPEED	36.0	47.	.05	560.
					LO SPEED	18.0	45.	.06	450.
					IDLE DR.		102.	1.40	44.
					IDLE NEU.		75.	1.35	32.
4095	1974	FORD	STAW	351	HI SPEED	31.0	125.	.85	2900.
					LO SPEED	15.0	105.	.22	1100.
					IDLE DR.		370.	4.90	40.
					IDLE NEU.		350.	4.80	35.
4096	1974	MERC	MONT	302	HI SPEED	31.0	55.	.06	3200.
					LO SPEED	15.0	100.	.04	1700.
					IDLE DR.		380.	1.50	12.
					IDLE NEU.		800.	2.70	8.
4097	1974	OLDS	CUTL	350	HI SPEED	31.0	120.	.13	2000.
					LO SPEED	15.0	165.	.11	1675.
					IDLE DR.		250.	1.25	100.
					IDLE NEU.		130.	1.00	63.
4098	1974	OLDS	STAW	455	HI SPEED	36.0	38.	.10	1000.
					LO SPEED	18.0	67.	.09	580.
					IDLE DR.		127.	.26	95.
					IDLE NEU.		200.	.36	55.
4099	1974	PLYM	SCAM	318	HI SPEED	26.0	128.	.25	3700.
					LO SPEED	12.0	158.	.17	2700.
					IDLE DR.		206.	3.90	63.
					IDLE NEU.		169.	3.60	66.
4100	1974	PLYM	DUST	225	HI SPEED	26.0	28.	.06	790.
					LO SPEED	12.0	60.	.04	1850.
					IDLE DR.		60.	.09	95.
					IDLE NEU.		186.	.10	52.
4101	1974	PONT	GRNP	400	HI SPEED	31.0	12.	.04	180.
					LO SPEED	15.0	16.	.04	82.
					IDLE DR.		50.	.02	82.
					IDLE NEU.		20.	.03	22.
4102	1974	DATS	710	119	HI SPEED	21.0	10.	.04	2200.
					LO SPEED	9.0	15.	.03	1400.
					IDLE DR.		19.	.22	75.
					IDLE NEU.		20.	.23	62.

APPENDIX A

LISTING OF FEDERAL THREE MODE EMISSION
RESULTS ON INDIVIDUAL VEHICLES

ST. LOUIS

VEHICLE NUMBER	YEAR	MAKE	MODEL	CID	MODE	PLHP	HC	CO	NO
4103	1974	TOYO	CORO	97	HI SPEED	21.0	42.	.14	1400.
					LO SPEED	9.0	38.	.23	475.
					IDLE DR.		0.	0.00	0.
					IDLE NEU.		67.	.75	40.
4104	1974	TOYO	STAW	120	HI SPEED	26.0	73.	.03	880.
					LO SPEED	12.0	52.	.05	585.
					IDLE DR.		180.	2.75	11.
					IDLE NEU.		230.	2.60	10.
4105	1974	VOLK	SEDA	97	HI SPEED	21.0	157.	.05	3150.
					LO SPEED	9.0	245.	.22	2700.
					IDLE DR.		0.	0.00	0.
					IDLE NEU.		260.	4.20	79.
4106	1974	VOLK	SEDA	97	HI SPEED	21.0	72.	.08	1500.
					LO SPEED	9.0	140.	.07	1925.
					IDLE DR.		0.	0.00	0.
					IDLE NEU.		135.	1.30	53.
4339	1974	AMC	HORN	258	HI SPEED	26.0	115.	.42	3300.
					LO SPEED	12.0	205.	2.00	1800.
					IDLE DR.		210.	3.90	115.
					IDLE NEU.		180.	3.70	74.
4340	1974	BUIC	REGA	350	HI SPEED	31.0	20.	.12	650.
					LO SPEED	15.0	34.	.22	400.
					IDLE DR.		35.	.70	25.
					IDLE NEU.		18.	.12	20.
4341	1974	BUIC	RIVI	455	HI SPEED	36.0	28.	.07	1700.
					LO SPEED	18.0	38.	.06	900.
					IDLE DR.		110.	1.30	27.
					IDLE NEU.		140.	1.70	23.
4342	1974	CHEV	CHEL	350	HI SPEED	31.0	80.	.85	510.
					LO SPEED	15.0	75.	.10	250.
					IDLE DR.		100.	.28	88.
					IDLE NEU.		98.	.15	40.
4343	1974	CHEV	MONT	350	HI SPEED	31.0	190.	.23	1525.
					LO SPEED	15.0	206.	.12	550.
					IDLE DR.		240.	.14	94.
					IDLE NEU.		380.	.13	92.
4344	1974	CHEV	CHEL	350	HI SPEED	31.0	105.	.45	1150.
					LO SPEED	15.0	360.	.42	510.
					IDLE DR.		245.	3.80	63.
					IDLE NEU.		195.	3.45	57.

APPENDIX M

LISTING OF FEDERAL THREE MODE EMISSION
RESULTS ON INDIVIDUAL VEHICLES

ST. LOUIS

VEHICLE NUMBER	YEAR	MAKE	MODEL	CID	MODE	RLHP	HC	CO	NO
4345	1974	CHEV	STAW	400	HI SPEED	36.0	82.	.13	1475.
					LO SPEED	18.0	105.	.10	1275.
					IDLE DR.		190.	2.45	56.
					IDLE NEU.		180.	2.60	47.
4346	1974	CHEV	VEGA	140	HI SPEED	21.0	72.	.13	720.
					LO SPEED	9.0	83.	.09	220.
					IDLE DR.		125.	1.90	164.
					IDLE NEU.		117.	1.95	53.
4347	1974	DODG	DART	225	HI SPEED	26.0	150.	.51	3770.
					LO SPEED	12.0	195.	.40	3230.
					IDLE DR.		375.	4.20	140.
					IDLE NEU.		305.	3.75	73.
4348	1974	DODG	DART	318	HI SPEED	26.0	170.	.17	2125.
					LO SPEED	12.1	260.	.20	2492.
					IDLE DR.		240.	3.90	53.
					IDLE NEU.		205.	3.60	47.
4349	1974	FORD	TORI	351	HI SPEED	31.0	190.	.60	890.
					LO SPEED	15.0	220.	.57	2050.
					IDLE DR.		195.	1.80	100.
					IDLE NEU.		140.	1.70	60.
4350	1974	FORD	GALA	400	HI SPEED	31.0	100.	.23	1075.
					LO SPEED	15.0	70.	.15	710.
					IDLE DR.		255.	5.70	60.
					IDLE NEU.		225.	5.80	53.
4351	1974	FORD	LTD	400	HI SPEED	31.0	725.	.17	2800.
					LO SPEED	15.0	625.	.13	650.
					IDLE DR.		1000.	5.00	50.
					IDLE NEU.		675.	5.10	40.
4352	1974	FORD	MUST	140	HI SPEED	26.0	120.	.22	2450.
					LO SPEED	12.0	170.	.45	1425.
					IDLE DR.		325.	5.30	73.
					IDLE NEU.		325.	5.55	55.
4353	1974	LINC	MRK4	460	HI SPEED	36.0	100.	2.20	500.
					LO SPEED	18.0	65.	1.70	210.
					IDLE DR.		65.	1.00	90.
					IDLE NEU.		45.	.70	60.
4354	1974	MERC	MONG	351	HI SPEED	31.0	173.	1.05	1025.
					LO SPEED	15.0	143.	.33	690.
					IDLE DR.		215.	.42	100.
					IDLE NEU.		145.	.45	55.

APPENDIX A

LISTING OF FEDERAL THREE MODE EMISSION
RESULTS ON INDIVIDUAL VEHICLES

ST. LOUIS

VEHICLE NUMBER	YEAR	MAKE	MODEL	CID	MODE	RLHP	HC	CO	NO
4355	1974	OLDS	CUTL	350	HI SPEED	31.0	212.	4.80	380.
					LO SPEED	15.0	280.	5.60	95.
					IDLE DR.		190.	2.80	70.
					IDLE NEU.		140.	2.65	59.
4356	1974	PLYM	FRY3	360	HI SPEED	31.0	145.	.65	2200.
					LO SPEED	15.0	195.	.75	2400.
					IDLE DR.		220.	5.40	52.
					IDLE NEU.		190.	5.50	44.
4357	1974	PONT	BONN	400	HI SPEED	31.0	120.	.40	1250.
					LO SPEED	15.0	230.	1.90	420.
					IDLE DR.		430.	7.50	48.
					IDLE NEU.		420.	7.30	38.
4358	1974	PONT	LEMA	350	HI SPEED	31.0	125.	.18	3500.
					LO SPEED	15.0	170.	.29	2375.
					IDLE DR.		395.	5.20	67.
					IDLE NEU.		460.	5.10	42.
4359	1974	CAPR	SPOR	122	HI SPEED	21.0	13.	.03	1750.
					LO SPEED	9.0	15.	.03	880.
					IDLE DR.		0.	0.00	0.
					IDLE NEU.		40.	.49	72.
4360	1974	DATS	B210	79	HI SPEED	21.0	115.	.25	1625.
					LO SPEED	9.0	125.	.17	650.
					IDLE DR.		0.	0.00	0.
					IDLE NEU.		250.	2.60	65.
4361	1974	MAZD	STAW	70	HI SPEED	26.0	62.	.70	666.
					LO SPEED	12.0	15.	.02	240.
					IDLE DR.		24.	0.00	29.
					IDLE NEU.		10.	0.00	24.
3107	1973	AMC	GREM	232	HI SPEED	26.0	72.	.10	1125.
					LO SPEED	12.0	135.	.15	920.
					IDLE DR.		0.	0.00	0.
					IDLE NEU.		490.	4.10	54.
3108	1973	BUIC	CNTR	455	HI SPEED	31.0	65.	.14	975.
					LO SPEED	15.0	70.	.14	650.
					IDLE DR.		110.	.65	85.
					IDLE NEU.		85.	.23	53.
3109	1973	BUIC	CNTY	350	HI SPEED	31.0	24.	.11	640.
					LO SPEED	15.0	32.	.13	300.
					IDLE DR.		105.	3.20	36.
					IDLE NEU.		52.	1.60	30.

APPENDIX B

LISTING OF FEDERAL THREE MODE EMISSION
RESULTS ON INDIVIDUAL VEHICLES

ST. LOUIS

VEHICLE NUMBER	YEAR	MAKE	MODEL	CID	MODE	RLHP	HC	CO	NO
3110	1973	CADI	DEVI	472	HI SPEED	36.0	24.	.22	250.
					LO SPEED	18.0	30.	.10	210.
					IDLE DR.		40.	.60	30.
					IDLE NEU.		30.	.32	20.
3111	1973	CHEV	VEGA	140	HI SPEED	21.0	79.	.15	550.
					LO SPEED	9.0	68.	.17	630.
					IDLE DR.		0.	0.00	0.
					IDLE NEU.		83.	1.85	23.
3112	1973	CHEV	MONT	350	HI SPEED	31.0	30.	.10	820.
					LO SPEED	15.0	54.	.23	620.
					IDLE DR.		90.	1.80	40.
					IDLE NEU.		73.	.90	35.
3113	1973	CHEV	CAMA	350	HI SPEED	26.0	65.	.33	2250.
					LO SPEED	12.0	105.	.55	1175.
					IDLE DR.		140.	3.30	40.
					IDLE NEU.		72.	2.60	30.
3114	1973	CHEV	IMPA	350	HI SPEED	31.0	58.	.07	1100.
					LO SPEED	15.0	46.	.12	730.
					IDLE DR.		57.	.11	49.
					IDLE NEU.		90.	.09	24.
3115	1973	CHEV	IMPA	350	HI SPEED	31.0	55.	.13	980.
					LO SPEED	15.0	78.	.18	570.
					IDLE DR.		100.	1.73	54.
					IDLE NEU.		65.	.93	38.
3116	1973	DODG	DART	225	HI SPEED	26.0	65.	.24	4600.
					LO SPEED	12.0	90.	.07	2250.
					IDLE DR.		80.	.05	105.
					IDLE NEU.		90.	.08	50.
3117	1973	FORD	PINT	122	HI SPEED	21.0	6.	.01	1050.
					LO SPEED	9.0	15.	.01	720.
					IDLE DR.		27.	.60	26.
					IDLE NEU.		25.	.50	22.
3118	1973	FORD	TORI	351	HI SPEED	31.0	153.	.95	1325.
					LO SPEED	15.0	163.	.45	740.
					IDLE DR.		294.	5.15	54.
					IDLE NEU.		275.	5.35	44.
3119	1973	FORD	MUST	302	HI SPEED	26.0	157.	.90	1600.
					LO SPEED	12.0	130.	.60	720.
					IDLE DR.		290.	4.80	75.
					IDLE NEU.		180.	5.00	60.

APPENDIX N

LISTING OF FEDERAL THREE MODE EMISSION
RESULTS ON INDIVIDUAL VEHICLES

ST. LOUIS

VEHICLE NUMBER	YEAR	MAKE	MODEL	CID	MODE	RLHP	HC	CO	NO
3120	1973	FORD	TORI	351	HI SPEED	31.0	125.	.49	2250.
					LO SPEED	15.0	125.	.25	1725.
					IDLE DR.		29.	2.90	74.
					IDLE NEU.		105.	2.70	59.
3121	1973	FORD	STAW	400	HI SPEED	36.0	82.	.26	4050.
					LO SPEED	18.0	65.	.22	1300.
					IDLE DR.		130.	3.20	145.
					IDLE NEU.		90.	3.10	85.
3122	1973	MERC	MONG	400	HI SPEED	31.0	22.	.08	1025.
					LO SPEED	15.0	45.	.09	790.
					IDLE DR.		180.	5.00	59.
					IDLE NEU.		160.	4.80	49.
3123	1973	OLDS	TORO	455	HI SPEED	36.0	23.	.05	1250.
					LO SPEED	18.0	40.	.10	440.
					IDLE DR.		38.	.15	34.
					IDLE NEU.		40.	.18	23.
3124	1973	OLDS	CUTL	350	HI SPEED	31.0	43.	.10	600.
					LO SPEED	15.0	82.	.12	810.
					IDLE DR.		205.	4.70	60.
					IDLE NEU.		205.	4.60	45.
3125	1973	PLYM	SATE	318	HI SPEED	26.0	103.	.17	1900.
					LO SPEED	12.0	150.	.12	1800.
					IDLE DR.		158.	2.40	55.
					IDLE NEU.		140.	2.30	40.
3126	1973	PLYM	VALI	318	HI SPEED	26.0	55.	.22	1700.
					LO SPEED	12.0	55.	.06	1500.
					IDLE DR.		95.	1.40	92.
					IDLE NEU.		82.	1.30	56.
3127	1973	PONT	GRNV	400	HI SPEED	31.0	70.	.09	1700.
					LO SPEED	15.0	120.	.08	1200.
					IDLE DR.		200.	2.10	35.
					IDLE NEU.		180.	2.50	29.
3128	1973	PONT	LEMA	350	HI SPEED	31.0	87.	.10	4100.
					LO SPEED	15.0	150.	.13	3600.
					IDLE DR.		195.	.07	700.
					IDLE NEU.		1300.	.13	95.
3129	1973	DATS	STAW	97	HI SPEED	21.0	62.	.13	1475.
					LO SPEED	9.0	65.	.32	550.
					IDLE DR.		0.	0.00	0.
					IDLE NEU.		187.	2.85	22.

APPENDIX M

LISTING OF FEDERAL THREE MODE EMISSION
RESULTS ON INDIVIDUAL VEHICLES

ST. LOUIS

VEHICLE NUMBER	YEAR	MAKE	MODEL	CID	MODE	RLHP	HC	CO	NO
3130	1973	OPEL	STAW	116	HI SPEED	21.0	46.	.80	1825.
					LO SPEED	9.0	56.	1.00	690.
					IDLE DR.		30.	.70	60.
					IDLE NEU.		26.	.65	53.
3131	1973	TOYO	CARI	97	HI SPEED	21.0	64.	.62	1025.
					LO SPEED	9.0	74.	.41	630.
					IDLE DR.		122.	1.90	28.
					IDLE NEU.		116.	1.69	26.
3132	1973	VOLK	SEDA	103	HI SPEED	21.0	14.	.02	2100.
					LO SPEED	9.0	30.	.04	1650.
					IDLE DR.		0.	0.00	0.
					IDLE NEU.		45.	.50	70.
3133	1973	VOLK	SEDA	97	HI SPEED	21.0	105.	.10	3650.
					LO SPEED	9.0	275.	.11	2650.
					IDLE DR.		0.	0.00	0.
					IDLE NEU.		230.	3.40	83.
3362	1973	BUIC	CNTY	350	HI SPEED	31.0	40.	.13	940.
					LO SPEED	15.0	75.	.18	620.
					IDLE DR.		90.	1.70	58.
					IDLE NEU.		42.	.70	44.
3363	1973	BUIC	RIVE	455	HI SPEED	36.0	52.	.08	780.
					LO SPEED	18.0	55.	.07	420.
					IDLE DR.		70.	.18	98.
					IDLE NEU.		60.	.13	50.
3364	1973	CHEV	STAW	400	HI SPEED	36.0	95.	1.05	1600.
					LO SPEED	18.0	90.	.17	1100.
					IDLE DR.		280.	4.80	60.
					IDLE NEU.		280.	5.10	50.
3365	1973	CHEV	VEGA	140	HI SPEED	21.0	140.	.22	2350.
					LO SPEED	9.0	210.	.30	1750.
					IDLE DR.		350.	4.60	110.
					IDLE NEU.		550.	6.70	20.
3366	1973	CHEV	NOVA	250	HI SPEED	26.0	81.	.82	2150.
					LO SPEED	12.0	101.	1.25	945.
					IDLE DR.		105.	.41	75.
					IDLE NEU.		84.	.17	39.
3367	1973	CHEV	IMPA	350	HI SPEED	31.0	50.	.13	2000.
					LO SPEED	15.0	90.	.72	1200.
					IDLE DR.		87.	1.75	55.
					IDLE NEU.		53.	1.20	30.

APPENDIX A

LISTING OF FEDERAL THREE MODE EMISSION
RESULTS ON INDIVIDUAL VEHICLES

ST. LOUIS

VEHICLE NUMBER	YEAR	MAKE	MODEL	CID	MODE	RLHP	HC	CO	NO
3368	1973	CHEV	CAMA	307	HI SPEED	26.0	26.	.11	720.
					LO SPEED	12.0	51.	.24	350.
					IDLE DR.		37.	.68	16.
					IDLE NEU.		28.	.43	11.
3369	1973	CHEV	STAW	454	HI SPEED	36.0	110.	1.20	990.
					LO SPEED	18.0	110.	1.40	550.
					IDLE DR.		490.	3.05	52.
					IDLE NEU.		640.	1.75	37.
3370	1973	CHRY	NEWP	400	HI SPEED	31.0	115.	.73	2150.
					LO SPEED	15.0	191.	.19	2500.
					IDLE DR.		280.	5.20	65.
					IDLE NEU.		250.	4.45	43.
3371	1973	DODG	CHAR	318	HI SPEED	31.0	180.	.57	1900.
					LO SPEED	15.0	250.	.40	2300.
					IDLE DR.		170.	2.20	72.
					IDLE NEU.		127.	1.98	51.
3372	1973	DODG	STAW	360	HI SPEED	31.0	54.	.40	2350.
					LO SPEED	15.0	58.	.24	2150.
					IDLE DR.		77.	1.90	55.
					IDLE NEU.		160.	1.90	42.
3373	1973	FORD	PINT	122	HI SPEED	21.0	168.	.27	1775.
					LO SPEED	9.0	205.	1.10	730.
					IDLE DR.		0.	0.00	0.
					IDLE NEU.		410.	4.70	19.
3374	1973	FORD	TORI	351	HI SPEED	31.0	143.	.30	2450.
					LO SPEED	15.0	155.	.11	1125.
					IDLE DR.		154.	.30	80.
					IDLE NEU.		115.	.35	46.
3375	1973	FORD	STAW	400	HI SPEED	36.0	21.	.05	645.
					LO SPEED	18.0	33.	.06	370.
					IDLE DR.		48.	.49	13.
					IDLE NEU.		43.	.39	10.
3376	1973	FORD	STAW	400	HI SPEED	36.0	36.	.06	3500.
					LO SPEED	18.0	27.	.03	1800.
					IDLE DR.		44.	.06	125.
					IDLE NEU.		180.	.03	48.
3377	1973	MERC	MONG	302	HI SPEED	31.0	108.	.25	2150.
					LO SPEED	15.0	64.	.20	820.
					IDLE DR.		57.	.35	150.
					IDLE NEU.		64.	.38	87.

APPENDIX M

LISTING OF FEDERAL THREE MODE EMISSION
RESULTS ON INDIVIDUAL VEHICLES

ST. LOUIS

VEHICLE NUMBER	YEAR	MAKE	MODEL	CID	MODE	RLHP	HC	CO	NO
3378	1973	OLDS	DELT	350	HI SPEED	31.0	76.	.28	1350.
					LO SPEED	15.0	123.	.75	750.
					IDLE DR.		105.	.65	60.
					IDLE NEU.		440.	.75	35.
3379	1973	OLDS	NNTY	455	HI SPEED	36.0	34.	.10	850.
					LO SPEED	18.0	43.	.11	760.
					IDLE DR.		73.	.11	160.
					IDLE NEU.		45.	.21	80.
3380	1973	PLYM	FRY3	360	HI SPEED	31.0	128.	.23	3150.
					LO SPEED	15.0	145.	.09	3650.
					IDLE DR.		280.	5.20	42.
					IDLE NEU.		305.	5.20	33.
3381	1973	PONT	VENT	350	HI SPEED	26.0	145.	.25	3986.
					LO SPEED	12.0	185.	.15	2292.
					IDLE DR.		275.	3.70	58.
					IDLE NEU.		265.	4.00	47.
3382	1973	PONT	GRNV	455	HI SPEED	31.0	65.	.15	1250.
					LO SPEED	15.0	130.	.25	785.
					IDLE DR.		110.	.07	51.
					IDLE NEU.		130.	.08	30.
3383	1973	MERC	CAPR	122	HI SPEED	21.0	80.	.11	2050.
					LO SPEED	9.0	115.	.12	930.
					IDLE DR.		0.	0.00	0.
					IDLE NEU.		130.	1.25	34.
3384	1973	MAZD	RX3	70	HI SPEED	21.0	120.	1.75	850.
					LO SPEED	9.0	75.	.40	310.
					IDLE DR.		0.	0.00	0.
					IDLE NEU.		62.	.03	30.
2134	1972	AMC	MATA	258	HI SPEED	26.0	14.	.03	820.
					LO SPEED	12.0	30.	.04	530.
					IDLE DR.		53.	.70	26.
					IDLE NEU.		30.	.21	20.
2135	1972	BUIC	ELEC	455	HI SPEED	36.0	46.	.06	1850.
					LO SPEED	18.0	63.	.05	1325.
					IDLE DR.		55.	.86	31.
					IDLE NEU.		38.	.43	15.
2136	1972	CADI	CALA	472	HI SPEED	36.0	40.	.13	1800.
					LO SPEED	18.0	77.	.39	1325.
					IDLE DR.		82.	.90	49.
					IDLE NEU.		61.	.75	38.

APPENDIX M

LISTING OF FEDERAL THREE MODE EMISSION
RESULTS ON INDIVIDUAL VEHICLES

ST. LOUIS

VEHICLE NUMBER	YEAR	MAKE	MODEL	CID	MODE	RLHP	HC	CO	NO
2137	1972	CHEV	VEGA	140	HI SPEED	21.0	65.	.08	1000.
					LO SPEED	9.0	132.	.26	1250.
					IDLE DR.		0.	0.00	0.
					IDLE NEU.		138.	1.20	57.
2138	1972	CHEV	STAW	350	HI SPEED	31.0	145.	.55	2650.
					LO SPEED	15.0	215.	1.10	1275.
					IDLE DR.		290.	4.10	79.
					IDLE NEU.		200.	3.75	61.
2139	1972	CHEV	CHEL	350	HI SPEED	26.0	26.	.07	545.
					LO SPEED	12.0	32.	.05	195.
					IDLE DR.		94.	1.71	19.
					IDLE NEU.		83.	1.65	16.
2140	1972	CHEV	CHEL	307	HI SPEED	26.0	125.	.18	2200.
					LO SPEED	12.0	255.	.15	2550.
					IDLE DR.		395.	4.50	64.
					IDLE NEU.		365.	4.60	49.
2141	1972	CHEV	STAW	350	HI SPEED	36.0	140.	.35	2550.
					LO SPEED	18.0	245.	1.80	1375.
					IDLE DR.		250.	3.70	71.
					IDLE NEU.		210.	3.30	56.
2142	1972	CHEV	CAPR	400	HI SPEED	31.0	110.	.16	2925.
					LO SPEED	15.0	150.	.21	2350.
					IDLE DR.		290.	4.50	82.
					IDLE NEU.		210.	4.80	66.
2143	1972	DODG	CHAR	318	HI SPEED	26.0	52.	.15	850.
					LO SPEED	12.0	85.	.18	670.
					IDLE DR.		43.	.11	37.
					IDLE NEU.		28.	.09	23.
2144	1972	FORD	PINT	122	HI SPEED	21.0	60.	.32	1450.
					LO SPEED	9.0	115.	.24	1100.
					IDLE DR.		0.	0.00	0.
					IDLE NEU.		140.	2.00	28.
2145	1972	FORD	TORI	351	HI SPEED	26.0	153.	.28	3400.
					LO SPEED	12.0	155.	.22	1450.
					IDLE DR.		195.	5.10	85.
					IDLE NEU.		175.	4.90	73.
2146	1972	FORD	MAVE	200	HI SPEED	26.0	45.	.05	1450.
					LO SPEED	12.0	77.	.04	1625.
					IDLE DR.		130.	2.15	40.
					IDLE NEU.		92.	1.95	27.

APPENDIX M

LISTING OF FEDERAL THREE MODE EMISSION
RESULTS ON INDIVIDUAL VEHICLES

ST. LOUIS

VEHICLE NUMBER	YEAR	MAKE	MODEL	CID	MODE	RLHP	HC	CO	NO
2147	1972	FORD	STAW	400	HI SPEED	31.0	65.	.37	1675.
					LO SPEED	15.0	60.	.18	1075.
					IDLE DR.		162.	4.30	97.
					IDLE NEU.		145.	4.60	80.
2148	1972	FORD	LTD	400	HI SPEED	31.0	125.	.65	3000.
					LO SPEED	15.0	115.	.35	1625.
					IDLE DR.		145.	3.80	85.
					IDLE NEU.		125.	3.60	65.
2149	1972	MERC	MONR	400	HI SPEED	31.0	55.	.18	2200.
					LO SPEED	15.0	67.	.12	1600.
					IDLE DR.		112.	.17	580.
					IDLE NEU.		210.	.08	95.
2150	1972	OLDS	CUTL	350	HI SPEED	26.0	32.	.08	850.
					LO SPEED	12.0	57.	.13	730.
					IDLE DR.		75.	.42	67.
					IDLE NEU.		95.	.42	67.
2151	1972	PLYM	DUST	225	HI SPEED	26.0	120.	1.50	2400.
					LO SPEED	12.0	175.	2.00	2000.
					IDLE DR.		260.	3.30	100.
					IDLE NEU.		190.	2.80	80.
2152	1972	PLYM	FRY3	360	HI SPEED	31.0	170.	1.22	2950.
					LO SPEED	15.0	230.	.77	2550.
					IDLE DR.		445.	8.05	26.
					IDLE NEU.		490.	8.20	24.
2153	1972	PONT	GRNV	400	HI SPEED	31.0	52.	.09	1950.
					LO SPEED	15.0	78.	.07	1200.
					IDLE DR.		120.	1.65	56.
					IDLE NEU.		180.	1.60	39.
2154	1972	PONT	FIRE	350	HI SPEED	26.0	140.	.23	2325.
					LO SPEED	12.0	130.	.22	1150.
					IDLE DR.		175.	2.10	105.
					IDLE NEU.		124.	1.90	66.
2155	1972	DATS	510	97	HI SPEED	21.0	47.	.04	1125.
					LO SPEED	9.0	82.	.03	1225.
					IDLE DR.		0.	0.00	0.
					IDLE NEU.		115.	2.30	14.
2156	1972	TOYO	CELI	120	HI SPEED	21.0	160.	.13	4200.
					LO SPEED	9.0	245.	2.40	1550.
					IDLE DR.		0.	0.00	0.
					IDLE NEU.		1300.	5.90	23.

APPENDIX F

LISTING OF FEDERAL THREE MODE EMISSION
RESULTS ON INDIVIDUAL VEHICLES

ST. LOUIS

VEHICLE NUMBER	YEAR	MAKE	MODEL	CID	MODE	RLHP	HC	CO	NO
2157	1972	VOLK	SEDA	97	HI SPEED	21.0	95.	.13	1750.
					LO SPEED	9.0	210.	.80	1275.
					IDLE DR.		0.	0.00	0.
					IDLE NEU.		560.	5.80	36.
2158	1972	VOLK	SEDA	97	HI SPEED	21.0	16.	.01	3900.
					LO SPEED	9.0	25.	.20	1800.
					IDLE DR.		0.	0.00	0.
					IDLE NEU.		38.	.55	51.
2385	1972	BUIC	STAW	350	HI SPEED	31.0	28.	.13	580.
					LO SPEED	15.0	44.	.26	460.
					IDLE DR.		68.	.47	65.
					IDLE NEU.		60.	.41	39.
2386	1972	BUIC	LESA	350	HI SPEED	31.0	87.	.40	2600.
					LO SPEED	15.0	185.	.80	2000.
					IDLE DR.		185.	2.60	84.
					IDLE NEU.		165.	3.20	67.
2387	1972	CHEV	VEGA	140	HI SPEED	21.0	150.	.45	3800.
					LO SPEED	9.0	340.	1.65	2300.
					IDLE DR.		475.	6.00	65.
					IDLE NEU.		450.	5.90	55.
2388	1972	CHEV	NOVA	250	HI SPEED	26.0	55.	.10	3100.
					LO SPEED	12.0	110.	.11	2400.
					IDLE DR.		140.	1.20	140.
					IDLE NEU.		100.	1.00	85.
2389	1972	CHEV	MALI	350	HI SPEED	26.0	80.	.18	2150.
					LO SPEED	12.0	200.	.55	1725.
					IDLE DR.		160.	1.95	100.
					IDLE NEU.		125.	2.40	80.
2390	1972	CHEV	IMPA	350	HI SPEED	31.0	100.	.26	3100.
					LO SPEED	15.0	160.	.62	2400.
					IDLE DR.		180.	1.65	190.
					IDLE NEU.		88.	1.80	75.
2391	1972	CHEV	IMPA	400	HI SPEED	31.0	80.	1.25	920.
					LO SPEED	15.0	75.	.20	750.
					IDLE DR.		200.	3.60	85.
					IDLE NEU.		180.	3.70	65.
2392	1972	CHRY	NEWP	400	HI SPEED	31.0	50.	1.00	700.
					LO SPEED	15.0	100.	1.25	400.
					IDLE DR.		170.	3.05	15.
					IDLE NEU.		240.	3.10	13.

APPENDIX M

LISTING OF FEDERAL THREE MODE EMISSION
RESULTS ON INDIVIDUAL VEHICLES

ST. LOUIS

VEHICLE NUMBER	YEAR	MAKE	MODEL	CID	MODE	RLHP	HC	CO	NO
2393	1972	DODG	DEMO	225	HI SPEED	26.0	47.	.10	1425.
					LO SPEED	12.0	78.	.23	940.
					IDLE DR.		142.	3.10	17.
					IDLE NEU.		130.	2.95	13.
2394	1972	FORD	PINT	122	HI SPEED	21.0	80.	.40	2700.
					LO SPEED	9.0	142.	.15	3600.
					IDLE DR.		250.	3.80	75.
					IDLE NEU.		195.	3.10	68.
2395	1972	FORD	TORI	302	HI SPEED	31.0	110.	.35	1950.
					LO SPEED	15.0	100.	.30	905.
					IDLE DR.		330.	4.75	39.
					IDLE NEU.		265.	4.85	28.
2396	1972	FORD	MUST	351	HI SPEED	26.0	190.	.80	2250.
					LO SPEED	12.0	190.	.50	845.
					IDLE DR.		225.	7.20	69.
					IDLE NEU.		200.	6.90	62.
2397	1972	FORD	GALA	429	HI SPEED	31.0	60.	.16	3400.
					LO SPEED	15.0	107.	.12	2400.
					IDLE DR.		95.	.08	120.
					IDLE NEU.		62.	.07	65.
2398	1972	LINC	MRK4	460	HI SPEED	36.0	38.	.15	850.
					LO SPEED	18.0	30.	.08	420.
					IDLE DR.		78.	1.24	41.
					IDLE NEU.		55.	1.35	27.
2399	1972	MERC	MONG	302	HI SPEED	26.0	65.	.09	1210.
					LO SPEED	12.0	48.	.06	310.
					IDLE DR.		105.	1.32	46.
					IDLE NEU.		78.	1.20	24.
2400	1972	OLDS	CUTL	350	HI SPEED	26.0	68.	.11	2500.
					LO SPEED	12.0	135.	.11	2100.
					IDLE DR.		135.	1.10	80.
					IDLE NEU.		100.	.90	55.
2401	1972	OLDS	STAW	455	HI SPEED	36.0	37.	.10	1900.
					LO SPEED	18.0	74.	.08	1800.
					IDLE DR.		83.	1.20	66.
					IDLE NEU.		67.	.55	44.
2402	1972	PLYM	SATE	318	HI SPEED	26.0	85.	.15	2700.
					LO SPEED	12.0	155.	.13	2300.
					IDLE DR.		160.	4.00	82.
					IDLE NEU.		130.	4.20	70.

APPENDIX M

LISTING OF FEDERAL THREE MODE EMISSION
RESULTS ON INDIVIDUAL VEHICLES

ST. LOUIS

VEHICLE NUMBER	YEAR	MAKE	MODEL	CID	MODE	RLHP	HC	CO	NO
2403	1972	PONT	STAW	400	HI SPEED	36.0	85.	.09	2150.
					LO SPEED	18.0	160.	.15	2250.
					IDLE DR.		690.	5.70	34.
					IDLE NEU.		750.	5.40	26.
2404	1972	CAPR	COUP	122	HI SPEED	21.0	155.	.17	3450.
					LO SPEED	9.0	172.	.43	1700.
					IDLE DR.		0.	0.00	0.
					IDLE NEU.		272.	6.00	39.
1159	1971	BUIC	RIVE	455	HI SPEED	31.0	26.	.05	435.
					LO SPEED	15.0	40.	.09	270.
					IDLE DR.		115.	2.05	34.
					IDLE NEU.		110.	2.30	19.
1160	1971	BUIC	SKYL	350	HI SPEED	26.0	72.	.07	420.
					LO SPEED	12.0	125.	.08	280.
					IDLE DR.		320.	1.20	45.
					IDLE NEU.		340.	1.10	25.
1161	1971	CHEV	VEGA	140	HI SPEED	21.0	150.	1.60	1925.
					LO SPEED	9.0	225.	2.50	1500.
					IDLE DR.		325.	5.50	140.
					IDLE NEU.		250.	6.50	80.
1162	1971	CHEV	CHEL	350	HI SPEED	26.0	125.	.30	1525.
					LO SPEED	12.0	180.	.70	810.
					IDLE DR.		400.	5.30	75.
					IDLE NEU.		300.	5.10	60.
1163	1971	CHEV	NOVA	250	HI SPEED	26.0	26.	.06	320.
					LO SPEED	12.0	33.	.05	180.
					IDLE DR.		85.	.12	88.
					IDLE NEU.		55.	.18	43.
1164	1971	CHEV	IMPA	350	HI SPEED	31.0	70.	.23	1475.
					LO SPEED	15.0	120.	1.15	830.
					IDLE DR.		225.	3.50	85.
					IDLE NEU.		172.	2.90	66.
1165	1971	CHEV	IMPA	350	HI SPEED	31.0	8.	.01	2400.
					LO SPEED	15.0	8.	.01	1500.
					IDLE DR.		8.	.01	160.
					IDLE NEU.		6.	.01	57.
1166	1971	CHRY	NEWP	383	HI SPEED	31.0	40.	.29	2300.
					LO SPEED	15.0	40.	.04	2040.
					IDLE DR.		75.	1.60	65.
					IDLE NEU.		70.	1.60	51.

APPENDIX M

LISTING OF FEDERAL THREE MODE EMISSION
RESULTS ON INDIVIDUAL VEHICLES

ST. LOUIS

VEHICLE NUMBER	YEAR	MAKE	MODEL	CID	MODE	RLHP	HC	CO	NO
1167	1971	DODG	CHAR	318	HI SPEED	26.0	295.	.38	2750.
					LO SPEED	12.0	430.	.27	2525.
					IDLE DR.		1710.	.28	87.
					IDLE NEU.		1750.	.39	56.
1168	1971	FORD	PINT	122	HI SPEED	21.0	100.	1.20	3700.
					LO SPEED	9.0	127.	1.40	2900.
					IDLE DR.		0.	0.00	0.
					IDLE NEU.		97.	.70	85.
1169	1971	FORD	TORI	302	HI SPEED	26.0	83.	.09	3100.
					LO SPEED	12.0	58.	.08	930.
					IDLE DR.		78.	.90	200.
					IDLE NEU.		55.	.48	120.
1170	1971	FORD	MAVE	200	HI SPEED	26.0	155.	.09	4900.
					LO SPEED	12.0	110.	.12	1250.
					IDLE DR.		195.	3.00	140.
					IDLE NEU.		150.	3.30	88.
1171	1971	FORD	GALA	351	HI SPEED	31.0	120.	.70	3350.
					LO SPEED	15.0	138.	.20	2850.
					IDLE DR.		205.	3.80	77.
					IDLE NEU.		150.	3.00	52.
1172	1971	FORD	STAW	400	HI SPEED	31.0	68.	.14	1450.
					LO SPEED	15.0	75.	.18	860.
					IDLE DR.		152.	.83	148.
					IDLE NEU.		130.	.75	74.
1173	1971	MERC	COUG	351	HI SPEED	26.0	107.	.23	2800.
					LO SPEED	12.0	160.	.12	1500.
					IDLE DR.		280.	5.00	70.
					IDLE NEU.		240.	4.70	50.
1174	1971	OLDS	CUTL	350	HI SPEED	31.0	95.	.11	3800.
					LO SPEED	15.0	145.	.11	3400.
					IDLE DR.		150.	3.20	95.
					IDLE NEU.		120.	2.50	50.
1175	1971	PLYM	DUST	225	HI SPEED	26.0	15.	.21	2600.
					LO SPEED	12.0	17.	.03	3100.
					IDLE DR.		17.	.26	185.
					IDLE NEU.		11.	.22	120.
1176	1971	PONT	CATA	350	HI SPEED	31.0	100.	.16	3200.
					LO SPEED	15.0	120.	.14	1950.
					IDLE DR.		250.	3.80	90.
					IDLE NEU.		160.	3.40	68.

APPENDIX M

LISTING OF FEDERAL THREE MODE EMISSION
RESULTS ON INDIVIDUAL VEHICLES

ST. LOUIS

VEHICLE NUMBER	YEAR	MAKE	MODEL	CID	MODE	RLHP	HC	CO	NO
1177	1971	PONT	LEMA	350	HI SPEED	26.0	155.	.25	2900.
					LO SPEED	12.0	190.	.15	1275.
					IDLE DR.		255.	2.70	100.
					IDLE NEU.		185.	2.55	65.
1178	1971	DATS	B110	97	HI SPEED	21.0	2000.	4.50	51.
					LO SPEED	9.0	2000.	3.60	120.
					IDLE DR.		0.	0.00	0.
					IDLE NEU.		2000.	3.40	30.
1179	1971	TOYO	CORO	71	HI SPEED	21.0	92.	.07	5350.
					LO SPEED	9.0	146.	.90	3050.
					IDLE DR.		360.	5.40	56.
					IDLE NEU.		395.	5.10	39.
1180	1971	VOLK	SEDA	97	HI SPEED	21.0	130.	.65	2850.
					LO SPEED	9.0	235.	.32	2375.
					IDLE DR.		0.	0.00	0.
					IDLE NEU.		305.	3.80	71.
1405	1971	AMC	MATA	360	HI SPEED	26.0	155.	.34	3200.
					LO SPEED	12.0	172.	.15	1550.
					IDLE DR.		140.	.46	140.
					IDLE NEU.		117.	.50	120.
1406	1971	BUIC	ELEC	455	HI SPEED	31.0	40.	.05	610.
					LO SPEED	15.0	57.	.06	440.
					IDLE DR.		190.	2.10	17.
					IDLE NEU.		175.	2.20	14.
1407	1971	CADI	DEVI	472	HI SPEED	36.0	75.	.33	1900.
					LO SPEED	18.0	120.	.75	1225.
					IDLE DR.		100.	1.90	43.
					IDLE NEU.		90.	1.60	33.
1408	1971	CHEV	MONT	350	HI SPEED	26.0	67.	.18	1400.
					LO SPEED	12.0	120.	.67	780.
					IDLE DR.		325.	5.40	50.
					IDLE NEU.		300.	5.40	35.
1409	1971	CHEV	CHEL	307	HI SPEED	26.0	140.	.20	2800.
					LO SPEED	12.0	215.	.15	2550.
					IDLE DR.		600.	3.50	89.
					IDLE NEU.		530.	3.20	54.
1410	1971	CHEV	CHEL	350	HI SPEED	26.0	75.	.25	1600.
					LO SPEED	12.0	62.	.11	460.
					IDLE DR.		188.	1.25	112.
					IDLE NEU.		115.	1.05	63.

APPENDIX M

LISTING OF FEDERAL THREE MODE EMISSION
RESULTS ON INDIVIDUAL VEHICLES

ST. LOUIS

VEHICLE NUMBER	YEAR	MAKE	MODEL	CID	MODE	RLHP	HC	CO	NO
1411	1971	CHEV	IMPA	350	HI SPEED	31.0	100.	.18	2400.
					LO SPEED	15.0	158.	.65	1400.
					IDLE DR.		450.	5.90	25.
					IDLE NEU.		590.	6.00	13.
1412	1971	DODG	DART	225	HI SPEED	26.0	170.	1.65	2600.
					LO SPEED	12.0	305.	1.85	2050.
					IDLE DR.		910.	8.20	11.
					IDLE NEU.		880.	8.10	10.
1413	1971	FORD	MUST	302	HI SPEED	26.0	135.	.12	1125.
					LO SPEED	12.0	117.	.07	610.
					IDLE DR.		167.	2.40	26.
					IDLE NEU.		128.	2.25	21.
1414	1971	FORD	TORI	351	HI SPEED	26.0	115.	.47	1700.
					LO SPEED	12.0	155.	.12	1150.
					IDLE DR.		110.	1.60	11.
					IDLE NEU.		105.	1.75	10.
1415	1971	FORD	LTD	351	HI SPEED	31.0	1950.	.19	2450.
					LO SPEED	15.0	1925.	.17	1625.
					IDLE DR.		2000.	3.15	73.
					IDLE NEU.		2000.	2.90	53.
1416	1971	MERC	MONR	400	HI SPEED	31.0	155.	.12	3000.
					LO SPEED	15.0	230.	.13	2100.
					IDLE DR.		330.	4.90	95.
					IDLE NEU.		300.	4.60	60.
1417	1971	OLDS	CUTL	350	HI SPEED	31.0	88.	.12	2750.
					LO SPEED	15.0	115.	.10	1625.
					IDLE DR.		98.	1.25	97.
					IDLE NEU.		100.	2.10	68.
1418	1971	OLDS	CUTL	350	HI SPEED	26.0	330.	.65	2450.
					LO SPEED	12.0	230.	.50	1050.
					IDLE DR.		205.	2.75	105.
					IDLE NEU.		250.	2.20	71.
1419	1971	PLYM	DUST	318	HI SPEED	26.0	172.	.75	2150.
					LO SPEED	12.0	290.	1.50	900.
					IDLE DR.		420.	6.10	37.
					IDLE NEU.		420.	6.10	30.
1420	1971	PLYM	STAW	360	HI SPEED	31.0	230.	4.40	240.
					LO SPEED	15.0	310.	4.10	165.
					IDLE DR.		200.	3.60	39.
					IDLE NEU.		180.	3.50	38.

APPENDIX M

LISTING OF FEDERAL THREE MODE EMISSION
RESULTS ON INDIVIDUAL VEHICLES

ST. LOUIS

VEHICLE NUMBER	YEAR	MAKE	MODEL	CID	MODE	RLHP	HC	CO	NO
1421	1971	PONT	CATA	350	HI SPEED	31.0	90.	.16	2650.
					LO SPEED	15.0	135.	.30	1500.
					IDLE DR.		145.	.70	87.
					IDLE NEU.		150.	.65	75.
1422	1971	VOLK	SEDA	97	HI SPEED	21.0	60.	1.20	360.
					LO SPEED	9.0	215.	1.00	280.
					IDLE DR.		0.	0.00	0.
					IDLE NEU.		250.	3.20	14.
0181	1970	AMC	JAVE	232	HI SPEED	26.0	170.	.25	2650.
					LO SPEED	12.0	255.	.50	1825.
					IDLE DR.		0.	0.00	0.
					IDLE NEU.		320.	2.60	76.
0182	1970	BUIC	LESA	455	HI SPEED	31.0	60.	.15	2220.
					LO SPEED	15.0	85.	.15	1250.
					IDLE DR.		150.	.22	61.
					IDLE NEU.		675.	.15	47.
0183	1970	CHEV	NOVA	250	HI SPEED	26.0	0.	0.00	750.
					LO SPEED	12.0	0.	0.00	280.
					IDLE DR.		0.	0.00	74.
					IDLE NEU.		0.	0.00	68.
0184	1970	CHEV	CHEL	307	HI SPEED	26.0	320.	.70	2200.
					LO SPEED	12.0	440.	.83	1200.
					IDLE DR.		1390.	8.30	7.
					IDLE NEU.		1600.	8.20	7.
0185	1970	CHEV	CHEL	350	HI SPEED	26.0	57.	.26	730.
					LO SPEED	12.0	47.	.10	440.
					IDLE DR.		105.	2.20	44.
					IDLE NEU.		90.	2.00	34.
0186	1970	CHEV	IMPA	350	HI SPEED	31.0	170.	.40	4200.
					LO SPEED	15.0	250.	3.10	1100.
					IDLE DR.		420.	5.00	75.
					IDLE NEU.		475.	4.30	55.
0187	1970	CHEV	IMPA	350	HI SPEED	31.0	190.	1.70	1250.
					LO SPEED	15.0	160.	.50	1050.
					IDLE DR.		250.	2.10	105.
					IDLE NEU.		190.	2.00	65.
0188	1970	DODG	CORO	225	HI SPEED	26.0	50.	.50	2200.
					LO SPEED	12.0	110.	.80	1200.
					IDLE DR.		150.	2.30	40.
					IDLE NEU.		125.	2.10	25.

APPENDIX M

LISTING OF FEDERAL THREE MODE EMISSION
RESULTS ON INDIVIDUAL VEHICLES

ST. LOUIS

VEHICLE NUMBER	YEAR	MAKE	MODEL	CID	MODE	RLHP	HC	CO	NO
0189	1970	FORD	MUST	302	HI SPEED	26.0	75.	.15	1600.
					LO SPEED	12.0	87.	.11	600.
					IDLE DR.		280.	3.50	95.
					IDLE NEU.		180.	3.10	50.
0190	1970	FORD	STAW	302	HI SPEED	31.0	220.	.64	3100.
					LO SPEED	15.0	230.	.80	1550.
					IDLE DR.		350.	5.60	38.
					IDLE NEU.		310.	5.40	34.
0191	1970	FORD	LTD	351	HI SPEED	31.0	230.	.15	2600.
					LO SPEED	15.0	380.	.17	2250.
					IDLE DR.		1175.	1.95	155.
					IDLE NEU.		1150.	1.70	85.
0192	1970	FORD	LTD	351	HI SPEED	31.0	40.	.05	1175.
					LO SPEED	15.0	50.	.05	760.
					IDLE DR.		35.	.26	19.
					IDLE NEU.		32.	.27	16.
0193	1970	MERC	MARQ	390	HI SPEED	31.0	56.	.30	2500.
					LO SPEED	15.0	47.	.11	1950.
					IDLE DR.		38.	.56	130.
					IDLE NEU.		27.	.63	26.
0194	1970	OLDS	STAW	350	HI SPEED	31.0	30.	.10	600.
					LO SPEED	15.0	77.	.48	420.
					IDLE DR.		102.	2.50	20.
					IDLE NEU.		95.	2.40	16.
0195	1970	PLYM	STAW	383	HI SPEED	31.0	35.	.14	1250.
					LO SPEED	15.0	35.	.05	800.
					IDLE DR.		38.	.22	25.
					IDLE NEU.		95.	.18	18.
0196	1970	PLYM	DUST	318	HI SPEED	26.0	80.	1.75	540.
					LO SPEED	12.0	95.	.42	400.
					IDLE DR.		120.	3.10	16.
					IDLE NEU.		115.	3.00	11.
0197	1970	PONT	LEMA	350	HI SPEED	31.0	68.	.11	1500.
					LO SPEED	15.0	102.	.04	1100.
					IDLE DR.		238.	2.60	26.
					IDLE NEU.		245.	2.40	18.
0198	1970	DATS	510	97	HI SPEED	21.0	115.	.06	3000.
					LO SPEED	9.0	147.	.15	1975.
					IDLE DR.		0.	0.00	0.
					IDLE NEU.		200.	1.85	13.

APPENDIX A

LISTING OF FEDERAL THREE MODE EMISSION
RESULTS ON INDIVIDUAL VEHICLES

ST. LOUIS

VEHICLE NUMBER	YEAR	MAKE	MODEL	CID	MODE	RLHP	HC	CO	NO
0200	1970	VOLK	SEDA	97	HI SPEED	21.0	74.	.75	1470.
					LO SPEED	9.0	75.	.08	1375.
					IDLE DR.		0.	0.00	0.
					IDLE NEU.		122.	3.70	17.
0423	1970	BUIC	SKYL	350	HI SPEED	26.0	175.	.45	3100.
					LO SPEED	12.0	300.	2.75	1150.
					IDLE DR.		380.	7.60	50.
					IDLE NEU.		380.	7.85	40.
0424	1970	BUIC	SKYL	350	HI SPEED	26.0	36.	.24	1500.
					LO SPEED	12.0	200.	2.00	510.
					IDLE DR.		810.	6.60	18.
					IDLE NEU.		1025.	6.50	16.
0425	1970	CADI	DEVI	472	HI SPEED	36.0	16.	.06	1300.
					LO SPEED	18.0	46.	.16	720.
					IDLE DR.		40.	.10	53.
					IDLE NEU.		46.	.08	42.
0426	1970	CHEV	CAMA	307	HI SPEED	26.0	17.	.08	2500.
					LO SPEED	12.0	25.	.02	2300.
					IDLE DR.		40.	.49	100.
					IDLE NEU.		40.	.45	85.
0427	1970	CHEV	STAW	350	HI SPEED	31.0	53.	.13	975.
					LO SPEED	15.0	80.	.26	660.
					IDLE DR.		127.	2.40	19.
					IDLE NEU.		108.	2.20	13.
0428	1970	CHEV	IMPA	400	HI SPEED	31.0	170.	1.10	2300.
					LO SPEED	15.0	155.	.10	2200.
					IDLE DR.		217.	2.80	115.
					IDLE NEU.		185.	2.70	70.
0429	1970	CHRY	STAW	383	HI SPEED	31.0	107.	.20	2350.
					LO SPEED	15.0	115.	.14	1125.
					IDLE DR.		113.	1.62	110.
					IDLE NEU.		97.	1.48	77.
0430	1970	DODG	CHAR	318	HI SPEED	26.0	372.	6.10	480.
					LO SPEED	12.0	395.	5.40	530.
					IDLE DR.		240.	2.20	360.
					IDLE NEU.		155.	2.45	95.
0431	1970	FORD	MAVE	200	HI SPEED	21.0	40.	.09	1125.
					LO SPEED	9.0	74.	.06	1025.
					IDLE DR.		83.	.75	94.
					IDLE NEU.		56.	1.12	47.

APPENDIX M

LISTING OF FEDERAL THREE MODE EMISSION
RESULTS ON INDIVIDUAL VEHICLES

ST. LOUIS

VEHICLE NUMBER	YEAR	MAKE	MODEL	CID	MODE	RLHP	HC	CO	NO
0432	1970	FORD	GALA	351	HI SPEED	31.0	4.	0.00	1650.
					LO SPEED	15.0	4.	0.00	990.
					IDLE DR.		7.	.08	91.
					IDLE NEU.		5.	.07	67.
0433	1970	FORD	LTD	390	HI SPEED	31.0	253.	.80	2700.
					LO SPEED	15.0	275.	1.00	2050.
					IDLE DR.		375.	4.20	84.
					IDLE NEU.		340.	4.10	57.
0434	1970	OLDS	DELT	350	HI SPEED	31.0	57.	.28	1050.
					LO SPEED	15.0	90.	.57	800.
					IDLE DR.		140.	1.70	79.
					IDLE NEU.		104.	1.40	63.
0435	1970	PLYM	SATE	318	HI SPEED	26.0	237.	.33	3050.
					LO SPEED	12.0	350.	.64	1950.
					IDLE DR.		500.	6.85	50.
					IDLE NEU.		445.	6.90	43.
0436	1970	PONT	GRNP	400	HI SPEED	31.0	230.	.15	3400.
					LO SPEED	15.0	280.	.12	2400.
					IDLE DR.		420.	.13	130.
					IDLE NEU.		920.	.20	55.
0437	1970	VOLK	SEDA	97	HI SPEED	21.0	97.	.80	3100.
					LO SPEED	9.0	190.	1.50	2200.
					IDLE DR.		0.	0.00	0.
					IDLE NEU.		270.	4.70	53.
9438	1969	AMC	RAMB	199	HI SPEED	26.0	30.	.19	1850.
					LO SPEED	12.0	45.	.11	1650.
					IDLE DR.		0.	0.00	0.
					IDLE NEU.		32.	.45	75.
9439	1969	BUIC	WILD	430	HI SPEED	31.0	128.	.14	3400.
					LO SPEED	15.0	210.	.78	2150.
					IDLE DR.		450.	6.00	39.
					IDLE NEU.		460.	5.85	29.
9440	1969	BUIC	SPEC	350	HI SPEED	26.0	175.	.43	3000.
					LO SPEED	12.0	280.	3.20	1500.
					IDLE DR.		580.	5.90	20.
					IDLE NEU.		565.	5.70	15.
9441	1969	CADI	DEVI	472	HI SPEED	36.0	58.	.16	1425.
					LO SPEED	18.0	78.	.73	800.
					IDLE DR.		100.	.32	120.
					IDLE NEU.		75.	.14	40.

APPENDIX M

LISTING OF FEDERAL THREE MODE EMISSION
RESULTS ON INDIVIDUAL VEHICLES

ST. LOUIS

VEHICLE NUMBER	YEAR	MAKE	MODEL	CID	MODE	RLHP	HC	CO	NO
9442	1969	CHEV	NOVA	307	HI SPEED	26.0	200.	1.55	2550.
					LO SPEED	12.0	240.	.55	2325.
					IDLE DR.		345.	4.45	75.
					IDLE NEU.		260.	4.30	46.
9443	1969	CHEV	IMPA	350	HI SPEED	31.0	120.	.15	4300.
					LO SPEED	15.0	180.	.22	3000.
					IDLE DR.		280.	4.80	51.
					IDLE NEU.		260.	4.50	34.
9444	1969	CHEV	CAMA	307	HI SPEED	26.0	100.	1.30	1350.
					LO SPEED	12.0	195.	1.20	1050.
					IDLE DR.		0.	0.00	0.
					IDLE NEU.		93.	2.50	28.
9445	1969	CHEV	IMPA	327	HI SPEED	31.0	200.	1.10	1325.
					LO SPEED	15.0	225.	.45	850.
					IDLE DR.		420.	6.55	60.
					IDLE NEU.		325.	6.30	45.
9446	1969	CHEV	ELCA	350	HI SPEED	26.0	225.	1.75	2200.
					LO SPEED	12.0	270.	4.40	1750.
					IDLE DR.		460.	5.50	26.
					IDLE NEU.		475.	5.60	25.
9447	1969	CHEV	NOVA	250	HI SPEED	26.0	77.	.08	1900.
					LO SPEED	12.0	133.	.20	1250.
					IDLE DR.		0.	0.00	0.
					IDLE NEU.		52.	.73	37.
9448	1969	CHEV	BELA	350	HI SPEED	31.0	129.	2.05	530.
					LO SPEED	15.0	230.	3.25	120.
					IDLE DR.		95.	.75	80.
					IDLE NEU.		57.	.49	41.
9449	1969	CHRY	NEWP	383	HI SPEED	31.0	80.	1.40	1250.
					LO SPEED	15.0	62.	.13	680.
					IDLE DR.		130.	1.20	75.
					IDLE NEU.		100.	1.10	60.
9450	1969	DODG	POLA	318	HI SPEED	31.0	75.	1.15	550.
					LO SPEED	15.0	105.	1.47	380.
					IDLE DR.		60.	.11	71.
					IDLE NEU.		45.	.10	33.
9451	1969	FORD	LTD	390	HI SPEED	31.0	15.	.02	1400.
					LO SPEED	15.0	12.	.03	1000.
					IDLE DR.		20.	.22	92.
					IDLE NEU.		17.	.18	70.

APPENDIX M

LISTING OF FEDERAL THREE MODE EMISSION
RESULTS ON INDIVIDUAL VEHICLES

ST. LOUIS

VEHICLE NUMBER	YEAR	MAKE	MODEL	CID	MODE	RLHP	HC	CO	NO
9452	1969	FORD	FALC	302	HI SPEED	26.0	232.	.17	3650.
					LO SPEED	12.0	305.	.14	3100.
					IDLE DR.		175.	.08	140.
					IDLE NEU.		380.	.13	63.
9453	1969	FORD	GALA	351	HI SPEED	31.0	120.	.35	1950.
					LO SPEED	15.0	87.	.20	1175.
					IDLE DR.		280.	4.55	83.
					IDLE NEU.		235.	4.40	64.
9454	1969	FORD	LTD	390	HI SPEED	31.0	120.	.78	1425.
					LO SPEED	15.0	142.	.95	750.
					IDLE DR.		183.	1.15	175.
					IDLE NEU.		210.	1.10	89.
9455	1969	FORD	FAIR	302	HI SPEED	26.0	195.	.12	4250.
					LO SPEED	12.0	255.	.10	3600.
					IDLE DR.		300.	3.50	105.
					IDLE NEU.		240.	3.20	71.
9456	1969	FORD	THUN	429	HI SPEED	31.0	167.	.58	3250.
					LO SPEED	15.0	164.	.20	2025.
					IDLE DR.		145.	.09	185.
					IDLE NEU.		98.	.22	79.
9457	1969	MERC	MONG	351	HI SPEED	26.0	17.	.05	880.
					LO SPEED	12.0	19.	.04	310.
					IDLE DR.		95.	1.65	44.
					IDLE NEU.		97.	1.95	30.
9458	1969	OLDS	98	455	HI SPEED	31.0	18.	.03	400.
					LO SPEED	15.0	28.	.05	220.
					IDLE DR.		40.	.32	17.
					IDLE NEU.		42.	.22	12.
9459	1969	OLDS	CUTL	350	HI SPEED	26.0	132.	.09	2200.
					LO SPEED	12.0	196.	.25	1700.
					IDLE DR.		167.	.34	240.
					IDLE NEU.		145.	.30	65.
9460	1969	PLYM	SATE	318	HI SPEED	26.0	90.	.65	2400.
					LO SPEED	12.0	125.	.85	1150.
					IDLE DR.		175.	2.70	34.
					IDLE NEU.		200.	3.00	19.
9461	1969	PLYM	VALI	225	HI SPEED	26.0	2000.	1.40	2300.
					LO SPEED	12.0	2000.	1.90	1500.
					IDLE DR.		2000.	5.00	50.
					IDLE NEU.		2000.	4.80	35.

APPENDIX C

LISTING OF FEDERAL THREE MODE EMISSION
RESULTS ON INDIVIDUAL VEHICLES

ST. LOUIS

VEHICLE NUMBER	YEAR	MAKE	MODEL	CID	MODE	RLHP	HC	CO	NO
9462	1969	PONT	LEMA	350	HI SPEED	26.0	55.	.12	1400.
					LO SPEED	12.0	75.	.26	830.
					IDLE DR.		80.	1.70	30.
					IDLE NEU.		75.	1.60	20.
9463	1969	PONT	CATA	400	HI SPEED	31.0	76.	.82	750.
					LO SPEED	15.0	93.	.75	595.
					IDLE DR.		86.	1.15	47.
					IDLE NEU.		66.	1.00	27.
9464	1969	PONT	STAW	400	HI SPEED	31.0	30.	.04	1800.
					LO SPEED	15.0	55.	.18	1100.
					IDLE DR.		150.	1.70	50.
					IDLE NEU.		155.	1.70	42.
9465	1969	TOYO	CORO	116	HI SPEED	21.0	30.	.08	1375.
					LO SPEED	9.0	37.	.20	770.
					IDLE DR.		0.	0.00	0.
					IDLE NEU.		30.	.37	17.
9466	1969	VOLK	SEDA	91	HI SPEED	21.0	134.	1.47	1425.
					LO SPEED	9.0	163.	.36	1450.
					IDLE DR.		0.	0.00	0.
					IDLE NEU.		285.	3.10	53.
9467	1969	VOLK	SEDA	91	HI SPEED	21.0	650.	3.60	920.
					LO SPEED	9.0	1000.	4.20	650.
					IDLE DR.		0.	0.00	0.
					IDLE NEU.		1200.	5.90	44.
8468	1966	AMC	STAW	199	HI SPEED	26.0	148.	.13	3800.
					LO SPEED	12.0	225.	.11	3000.
					IDLE DR.		390.	4.80	105.
					IDLE NEU.		280.	4.50	75.
8469	1968	AMC	RAMB	232	HI SPEED	26.0	42.	.09	1400.
					LO SPEED	12.0	62.	.22	1150.
					IDLE DR.		65.	1.10	66.
					IDLE NEU.		55.	.90	34.
8470	1967	AMC	REBE	290	HI SPEED	26.0	240.	2.20	1200.
					LO SPEED	12.0	325.	1.00	1900.
					IDLE DR.		290.	3.00	80.
					IDLE NEU.		275.	2.80	55.
8471	1968	BUIC	WILD	430	HI SPEED	31.0	57.	.01	5101.
					LO SPEED	15.0	595.	.16	980.
					IDLE DR.		620.	.95	50.
					IDLE NEU.		620.	.95	42.

APPENDIX M

LISTING OF FEDERAL THREE MODE EMISSION
RESULTS ON INDIVIDUAL VEHICLES

ST. LOUIS

VEHICLE NUMBER	YEAR	MAKE	MODEL	CID	MODE	RLHP	HC	CO	NO
8472	1968	BUIC	ELEC	430	HI SPEED	31.0	20.	.02	4500.
					LO SPEED	15.0	38.	.07	2900.
					IDLE DR.		75.	.75	76.
					IDLE NEU.		80.	.70	46.
8473	1968	BUIC	LESA	350	HI SPEED	31.0	156.	.17	3600.
					LO SPEED	15.0	203.	.45	2150.
					IDLE DR.		255.	3.60	86.
					IDLE NEU.		233.	3.50	58.
8474	1966	CADI	DEVI	429	HI SPEED	36.0	430.	6.15	380.
					LO SPEED	18.0	450.	5.10	330.
					IDLE DR.		600.	7.55	42.
					IDLE NEU.		575.	7.30	32.
8475	1968	CHEV	CHEL	230	HI SPEED	26.0	127.	.11	3200.
					LO SPEED	12.0	205.	.09	3570.
					IDLE DR.		263.	1.25	310.
					IDLE NEU.		150.	.85	82.
8476	1967	CHEV	CHEL	283	HI SPEED	26.0	2000.	2.70	1250.
					LO SPEED	12.0	2000.	4.30	270.
					IDLE DR.		2000.	5.70	23.
					IDLE NEU.		2000.	5.50	24.
8477	1967	CHEV	IMPA	283	HI SPEED	31.0	310.	1.87	2275.
					LO SPEED	15.0	420.	2.75	1225.
					IDLE DR.		640.	6.50	47.
					IDLE NEU.		795.	5.30	37.
8478	1968	CHEV	IMPA	327	HI SPEED	31.0	375.	1.30	1850.
					LO SPEED	15.0	610.	2.75	610.
					IDLE DR.		1500.	7.70	23.
					IDLE NEU.		1525.	7.80	19.
8479	1966	CHEV	IMPA	327	HI SPEED	31.0	190.	.33	650.
					LO SPEED	15.0	190.	.26	750.
					IDLE DR.		200.	.23	190.
					IDLE NEU.		170.	.20	85.
8480	1968	CHEV	IMPA	396	HI SPEED	31.0	265.	4.80	235.
					LO SPEED	15.0	320.	5.00	130.
					IDLE DR.		385.	5.50	47.
					IDLE NEU.		335.	5.20	41.
8481	1966	CHEV	CHEL	283	HI SPEED	26.0	330.	1.65	2650.
					LO SPEED	12.0	525.	3.15	1000.
					IDLE DR.		870.	5.60	41.
					IDLE NEU.		1775.	5.80	20.

APPENDIX M

LISTING OF FEDERAL THREE MODE EMISSION
RESULTS ON INDIVIDUAL VEHICLES

ST. LOUIS

VEHICLE NUMBER	YEAR	MAKE	MODEL	CID	MODE	RLHP	HC	CO	NO
8482	1967	CHEV	CAMA	250	HI SPEED	26.0	200.	1.50	2500.
					LO SPEED	12.0	240.	1.40	1700.
					IDLE DR.		860.	6.30	17.
					IDLE NEU.		1700.	6.00	15.
8483	1968	CHEV	CHEL	307	HI SPEED	26.0	360.	.61	4100.
					LO SPEED	12.0	390.	.45	3450.
					IDLE DR.		1200.	4.70	84.
					IDLE NEU.		1075.	4.80	79.
8484	1968	CHEV	CHEL	318	HI SPEED	26.0	280.	3.60	590.
					LO SPEED	12.0	320.	2.80	750.
					IDLE DR.		580.	4.30	60.
					IDLE NEU.		500.	3.90	46.
8485	1968	CHEV	IMPA	327	HI SPEED	31.0	200.	.85	1625.
					LO SPEED	15.0	340.	2.60	750.
					IDLE DR.		430.	6.10	55.
					IDLE NEU.		370.	5.90	48.
8486	1968	CHEV	IMPA	302	HI SPEED	31.0	260.	.80	3650.
					LO SPEED	15.0	345.	.75	3300.
					IDLE DR.		810.	4.90	49.
					IDLE NEU.		1200.	5.10	25.
8487	1968	CHRY	NEWP	383	HI SPEED	31.0	75.	.70	2200.
					LO SPEED	15.0	87.	.30	1800.
					IDLE DR.		83.	1.60	100.
					IDLE NEU.		68.	1.45	80.
8488	1967	DODG	DART	225	HI SPEED	26.0	400.	4.80	910.
					LO SPEED	12.0	430.	4.60	460.
					IDLE DR.		470.	4.15	69.
					IDLE NEU.		420.	5.10	50.
8489	1968	DODG	CORO	318	HI SPEED	26.0	96.	.90	730.
					LO SPEED	12.0	135.	1.10	505.
					IDLE DR.		87.	.08	40.
					IDLE NEU.		74.	.05	28.
8490	1968	DODG	MONA	383	HI SPEED	31.0	110.	3.20	620.
					LO SPEED	15.0	110.	2.40	400.
					IDLE DR.		80.	.80	82.
					IDLE NEU.		65.	.70	60.
8491	1967	FORD	MUST	289	HI SPEED	26.0	170.	.75	3400.
					LO SPEED	12.0	265.	1.40	2250.
					IDLE DR.		320.	5.60	48.
					IDLE NEU.		320.	5.70	32.

APPENDIX A

LISTING OF FEDERAL THREE MODE EMISSION
RESULTS ON INDIVIDUAL VEHICLES

ST. LOUIS

VEHICLE NUMBER	YEAR	MAKE	MODEL	CID	MODE	RLHP	HC	CO	NO
8492	1967	FORD	FAIR	289	HI SPEED	26.0	220.	1.50	1200.
					LO SPEED	12.0	310.	1.75	810.
					IDLE DR.		380.	6.30	49.
					IDLE NEU.		360.	6.60	40.
8493	1966	FORD	FAIR	289	HI SPEED	26.0	145.	.80	1600.
					LO SPEED	12.0	160.	.85	820.
					IDLE DR.		220.	4.80	90.
					IDLE NEU.		240.	4.60	64.
8494	1968	FORD	GALA	302	HI SPEED	31.0	60.	.16	1200.
					LO SPEED	15.0	72.	.10	1000.
					IDLE DR.		68.	.85	100.
					IDLE NEU.		52.	1.20	55.
8495	1968	FORD	TORI	302	HI SPEED	26.0	240.	.80	3600.
					LO SPEED	12.0	330.	.75	3000.
					IDLE DR.		780.	2.30	215.
					IDLE NEU.		800.	1.70	80.
8496	1968	FORD	GALA	390	HI SPEED	31.0	118.	.55	1600.
					LO SPEED	15.0	120.	.27	1100.
					IDLE DR.		325.	4.20	84.
					IDLE NEU.		260.	4.05	66.
8497	1967	FORD	MUST	200	HI SPEED	26.0	200.	1.50	2100.
					LO SPEED	12.0	380.	3.40	1000.
					IDLE DR.		410.	3.00	100.
					IDLE NEU.		300.	2.70	65.
8498	1967	FORD	GALA	289	HI SPEED	31.0	300.	1.25	2400.
					LO SPEED	15.0	410.	1.85	2175.
					IDLE DR.		580.	4.00	170.
					IDLE NEU.		630.	3.90	80.
8499	1967	FORD	MUST	289	HI SPEED	26.0	185.	.52	380.
					LO SPEED	12.0	245.	1.00	285.
					IDLE DR.		230.	4.85	8.
					IDLE NEU.		215.	5.10	7.
8500	1966	FORD	GALA	390	HI SPEED	31.0	540.	2.30	1625.
					LO SPEED	15.0	700.	2.30	1150.
					IDLE DR.		1800.	5.40	25.
					IDLE NEU.		1875.	5.50	20.
8501	1968	FORD	STAW	390	HI SPEED	31.0	180.	.65	2500.
					LO SPEED	15.0	205.	.35	2050.
					IDLE DR.		205.	2.70	85.
					IDLE NEU.		185.	2.55	70.

APPENDIX M

LISTING OF FEDERAL THREE MODE EMISSION
RESULTS ON INDIVIDUAL VEHICLES

ST. LOUIS

VEHICLE NUMBER	YEAR	MAKE	MODEL	CID	MODE	RLHP	HC	CO	NO
8502	1967	LINC	CONT	462	HI SPEED	36.0	80.	2.20	150.
					LO SPEED	18.0	105.	2.50	60.
					IDLE DR.		135.	3.00	10.
					IDLE NEU.		120.	2.90	16.
8503	1967	MERC	COUG	289	HI SPEED	26.0	200.	1.40	2300.
					LO SPEED	12.0	340.	3.20	820.
					IDLE DR.		650.	4.70	80.
					IDLE NEU.		680.	4.10	40.
8504	1967	OLDS	CUTL	330	HI SPEED	26.0	105.	1.45	370.
					LO SPEED	12.0	150.	2.20	120.
					IDLE DR.		480.	4.90	9.
					IDLE NEU.		440.	4.30	8.
8505	1967	OLDS	98	425	HI SPEED	31.0	38.	.24	540.
					LO SPEED	15.0	102.	1.24	310.
					IDLE DR.		165.	1.60	49.
					IDLE NEU.		128.	1.95	46.
8506	1968	OLDS	CUTL	350	HI SPEED	26.0	187.	1.25	2300.
					LO SPEED	12.0	315.	2.40	1150.
					IDLE DR.		490.	6.20	35.
					IDLE NEU.		490.	6.10	33.
8507	1968	PLYM	FRY3	318	HI SPEED	31.0	105.	.15	2375.
					LO SPEED	15.0	135.	.19	2225.
					IDLE DR.		145.	1.37	63.
					IDLE NEU.		100.	1.05	25.
8508	1968	PLYM	FRY3	318	HI SPEED	31.0	140.	.40	3150.
					LO SPEED	15.0	228.	.45	2400.
					IDLE DR.		285.	5.25	67.
					IDLE NEU.		263.	5.40	55.
8509	1968	PLYM	SATE	383	HI SPEED	26.0	160.	.90	2625.
					LO SPEED	12.0	280.	1.10	1950.
					IDLE DR.		330.	4.30	43.
					IDLE NEU.		410.	4.30	33.
8510	1966	PLYM	FRY3	383	HI SPEED	31.0	65.	.90	580.
					LO SPEED	15.0	115.	1.65	325.
					IDLE DR.		118.	1.33	97.
					IDLE NEU.		84.	1.90	28.
8511	1968	PONT	BONN	400	HI SPEED	31.0	145.	.23	1525.
					LO SPEED	15.0	195.	1.17	765.
					IDLE DR.		400.	4.75	50.
					IDLE NEU.		430.	4.40	40.

APPENDIX M

LISTING OF FEDERAL THREE MODE EMISSION
RESULTS ON INDIVIDUAL VEHICLES

ST. LOUIS

VEHICLE NUMBER	YEAR	MAKE	MODEL	CID	MODE	RLHP	HC	CO	NO
8512	1966	PONT	CATA	389	HI SPEED	31.0	29.	1.48	2340.
					LO SPEED	15.0	420.	2.00	1600.
					IDLE DR.		950.	6.20	22.
					IDLE NEU.		1180.	5.90	24.
8513	1968	PONT	TEMP	350	HI SPEED	26.0	118.	.18	2800.
					LO SPEED	12.0	125.	.09	2125.
					IDLE DR.		335.	3.45	88.
					IDLE NEU.		330.	3.00	63.
8514	1967	PONT	STAW	400	HI SPEED	31.0	200.	.50	3200.
					LO SPEED	15.0	280.	1.00	2000.
					IDLE DR.		350.	2.40	135.
					IDLE NEU.		420.	2.10	75.
8515	1968	PONT	STAW	389	HI SPEED	31.0	74.	.75	695.
					LO SPEED	15.0	125.	2.10	110.
					IDLE DR.		150.	3.35	13.
					IDLE NEU.		290.	3.35	11.
8516	1967	VOLK	SEDA	91	HI SPEED	21.0	310.	3.60	2350.
					LO SPEED	9.0	620.	5.00	820.
					IDLE DR.		0.	0.00	0.
					IDLE NEU.		740.	3.80	61.
8517	1966	VOLK	SEDA	97	HI SPEED	21.0	95.	1.20	840.
					LO SPEED	9.0	100.	1.00	520.
					IDLE DR.		0.	0.00	0.
					IDLE NEU.		200.	1.05	20.

TECHNICAL REPORT DATA
(Please read Instructions on the reverse before completing)

1. REPORT NO. EPA-460/3-77-004	2.	3. RECIPIENT'S ACCESSION NO.
4. TITLE AND SUBTITLE Study of Emissions From 1966 Through 1976 Model Year Light-Duty Vehicles in Los Los Angeles, St. Louis, and Washington, D. C.		5. REPORT DATE
		6. PERFORMING ORGANIZATION CODE
7. AUTHOR(S) Richard Carlson		8. PERFORMING ORGANIZATION REPORT NO.
9. PERFORMING ORGANIZATION NAME AND ADDRESS Olson Laboratories, Inc. 421 East Cerritos Avenue Anaheim, California 92805		10. PROGRAM ELEMENT NO.
		11. CONTRACT/GRANT NO. 68-03-2379
12. SPONSORING AGENCY NAME AND ADDRESS Environmental Protection Agency Office of Air and Waste Management Office of Mobile Source Air Pollution Control Emission Control Technology Div., Ann Arbor, Mich.		13. TYPE OF REPORT AND PERIOD COVERED
		14. SPONSORING AGENCY CODE EPA-ORD

15. SUPPLEMENTARY NOTES

16. ABSTRACT

Olson Laboratories, Inc., performed exhaust emission tests on 200 vehicles in Los Angeles, California; 506 vehicles in St. Louis, Missouri; and 133 vehicles in Washington, D.C. All vehicles were tested using the 1975 Federal Test Procedure. Sulfate tests were performed on 82 vehicles in St. Louis. Evaporative emission tests were performed on 20 vehicles in Los Angeles. Additional emission tests were conducted on particular vehicles including Highway Fuel Economy Tests, modal tests, and a series of five short-cycle tests.

17. KEY WORDS AND DOCUMENT ANALYSIS

a. DESCRIPTORS	b. IDENTIFIERS/OPEN ENDED TERMS	c. COSATI Field/Group

18. DISTRIBUTION STATEMENT Release to Public	19. SECURITY CLASS *(This Report)* Unclassified	21. NO. OF PAGES 652
	20. SECURITY CLASS *(This page)* Unclassified	22. PRICE

EPA Form 2220-1 (9-73)