EPA-AA-TEB-511-83-9

# EPA Evaluation of the Optimizer Device Under Section 511 of the Motor Vehicle Information and Cost Savings Act

by

Edward Anthony Barth

May 1983

Test and Evaluation Branch
Emission Control Technology Divison
Office of Mobile Sources
U.S. Environmental Protection Agency

EPA Evaluation of the Optimizer Device Under Section 511 of the Motor Vehicle Information and Cost Savings Act

The Motor Vehicle Information and Cost Savings Act requires that EPA evaluate fuel economy retrofit devices and publish a summary of each evaluation in the Federal Register.

EPA evaluations are originated upon the application of any manufacturer of a retrofit device, upon the request of the Federal Trade Commission, or upon the motion of the EPA Administrator. These studies are designed to determine whether the retrofit device increases fuel economy and to determine whether the representations made with respect to the device are accurate. The results of such studies are set forth in a series of reports, of which this is one.

The evaluation of the "Optimizer" was conducted upon the application of the manufacturer. The basic device is a combustion catalyst consisting of an electric fuel heater containing a bed of platinum deposited on an inert substrate. The remainder of the system includes a heater relay, a condenser to cool the fuel to operating temperature, and the associated plumbing. According to the applicant, the device introduces a very small amount of platinum into the fuel. This enhances the combustion process and allows ignition timing to be advanced. The device, coupled with the ignition timing adjustments, is claimed to improve fuel economy, increase performance, and reduce engine maintenance while keeping emissions low.

1. Title:

   Application for Evaluation of the Optimizer Under Section 511 of the Motor Vehicle Information and Cost Savings Act

---

The information contained in sections two through five (enclosed in quotation marks) which follow was supplied by the applicant.

---

2. Identification Information:

   a. Marketing Identification of the Product:

      "The product is the Optimizer (trade mark and patent pending), and will be marketed with the following model numbers:

      1150G - Gasoline Units - 4/6/8 cylinder automobile and light-duty trucks.

      1200G - Gasoline Units - Heavy-duty trucks.

      2150G - Gasoline Units - Heavy-duty trucks.

      1200D - Diesel Units - Automobile and light-duty trucks.

2200D - Diesel Units - Heavy-duty trucks.

4200D - Diesel Units - Detroit Diesel only (where dual feed system is used)."

"Each unit will also have an identifying stock number for quality control purposes."

The applicability of model 1200G was later changed to apply to both passenger vehicles and heavy-duty trucks (Attachments H, I, and K). Since evaluation of the diesel units would require the additional test data from an independent lab, the applicant withdrew the diesel unit from consideration (Attachments G, H, and I).

The applicant was also notified that devices for heavy-duty vehicles are not covered under the Section 511 evaluation process (Attachment G).

b. Inventor and Patent Protection:

(1) Inventors

George Reinhardt
11901 13 Mile Road
Warren, Michigan 48093

Ronald Kinde
95 Avery
Mt. Clemens, Michigan

Dr. Leon Rosky
1213 Maxine Street
Flint, Michigan 48053

Simca Singer
Haifa
Israel

(2) Patent

"Copy of patent application is appended." (See Attachment A.)

c. Applicant:

(1) Optimizer, Ltd.
220 Lynn Street
Flushing, Michigan 48433

(2) Principals

Dr. Leon I. Rosky
Oskar A. Singer
Edward H. Powers
Daniel F. Spaniola
Gabriel T. Anslow

(3) Dr. Leon I. Rosky is authorized to represent Optimizer Ltd. in communication with EPA.

d. Manufacturer of the Product:

| | |
|---|---|
| Optimizer, Ltd.<br>220 Lynn Street<br>Flushing, MI 48433 | Principals<br>Dr. Leon I. Rosky<br>Oskar A. Singer<br>Edward H. Powers<br>Daniel F. Spaniola<br>Gabirel T. Anslow |
| Matechet Carmel Mifratz, Ltd.<br>9 Hamasger Str.<br>Haifa-Bay, Israel | Principal<br>Mr. Evin Singer |

3. Description of Product:

a. Purpose:

"The Optimizer is a fuel savings device which can be used on both gasoline and diesel engines, including automobiles, light- and heavy-duty trucks. In addition to the fuel savings aspect, emissions are well within the EPA guidelines for CO, HC and $NO_x$. Performance of the vehicles is seen as markedly improved due to a cleaner, more complete combustion of the fuel. Consequently, an increase in the time intervals between tune-ups and extended engine life may be the long term benefits."

b. Applicability:

"Fuel economy [improvement] will be seen using the Optimizer on all gasoline and diesel vehicles. In 4-cylinder vehicles, which are very fuel efficient, the results may be less, again depending on the driver, weather conditions, engine size and type of carburetor.

The product will be marketed under the model numbers as described above." The model numbers are given in Sections 2a and 3f.

"The Optimizer heats fuel over a bed of a platinum-based chemical. This is done by means of running the fuel in close proximity both to a heating element and the chemical. Because heating is necessary, the unit will work less efficiently in very cold temperatures (35 degrees Fahrenheit or below). High winds, topography of the road, weather conditions and the driver's skill will greatly influence the fuel economy obtained. In most instances, without any fuel savings device, a motor vehicle will lose miles per gallon in the above described situations. With the use of the Optimizer, while the fuel savings may not be as great, there will not be the loss in miles per gallon as seen without the unit."

c. Theory of Operation:

"The improvement in fuel economy is attributed to an enhancement of the combustion process mainly by the on-site introduction of platinum or noble metals.

"The platinum or other noble metals are introduced into the fuel by passing the fuel through a bed of noble metals coated on an inert substrate.

"The bed is contained in a specially designed container housing attached in the fuel lines. The bed is heated with the gasoline remaining in the liquid state.

"Based upon many vehicle and dynamometer tests, trace amounts of platinum are 'dissolved' into the fuel and enter the cylinder combustion chamber where combustion takes place at a higher temperature. The hydrocarbon and carbon monoxide levels are substantially reduced with a slight increase in oxides of nitrogen, but well below the emission guidelines. This mechanism is not yet understood and is being studied with an on-going research effort.

"There also is an indication, based upon limited data, that there may be a low temperature catalytic reaction taking place within the device as evidenced by an increase in the ratio of aromatics to saturates in gasoline samples after passing through the devices. This is considered to be of minor impact at this time."

d. Construction and Operation:

"See attached drawing (Figure 1)." A schematic of the device and its installation are given in Figures 1 and 2 of Attachment A, the patent application.

e. Specific Claims for the Product:

"The Optimizer has been independently tested at Automotive Testing Laboratories, Inc. in East Liberty, Ohio, with the results of fuel economy and emissions attached to this application. The fuel economy obtained will vary from vehicle to vehicle due to the type of engine, driving habits, outside temperature, type of fuel and weather conditions. Test results, both at Automotive Testing Laboratories, Inc, and on-the-road testing, have established that between 5% and 15% improvement in fuel economy may be obtained. Emission levels are very low and there is an increase in performance of the vehicle. Our tests show that maintenance of the vehicle is easier and does not seem to be necessary as often. This again varies with the same conditions described above." The laboratory emissions and fuel economy results are summarized in Table I in Section 6d(2). The complete lab and road test results are contained in the tables and Figure in Attachment C.

f. Cost And Marketing Information:

"This product will be initially marketed to fleet owners of both gasoline and diesel vehicles. The suggested retail price of the Optimizer units will be as follows:

| Model Number | Price |
|---|---|
| 1500G | $ 390.00 |
| 1200G | 390.00 |
| 2150G | 750.00 |
| 1200D | 390.00 |
| 2200D | 750.00 |
| 4200D | 1,420.00 |

There is a quantity discount schedule available."

4. Product Installation, Operation, Safety and Maintenance:

a. Installation - Instructions, Equipment, and Skills Required:

"Enclosed in this application are the installation instructions for the product which address technical and mechanical procedures. Any mechanic will be able to install the unit and no special tools or skills are required other than what would normally be in a mechanic's tool chest. You will notice in the installation procedure that a timing advance of 5 degrees on gasoline engines is recommended. Our tests show that in order to utilize the improvement in the fuel mixture and obtain complete combustion, a timing advance is necessary. On some vehicles, a timing advance by itself may improve fuel economy; however, a long term detrimental effect on the valves and pistons may occur, along with persistent detonation. In testing done both at Automotive Testing Laboratories, Inc, and at Optimizer, Ltd, no detonation was heard with the Optimizer system (which includes the timing advance of 5 degrees). This signifies a more complete, efficient burn of the fuel. After installation of the unit, a break-in period of at least 1,000 miles is necessary in order to maximize the effect of the platinum on the combustion chamber itself. Tests done in intervals in that 1,000 mile break-in show a steady increase in fuel economy. It should also be noted that the reverse phenomenon is seen after the Optimizer unit is removed. If one were to remove the unit and immediately do a dynamometer test (as was done on one sequence at Automotive Testing Laboratories, Inc.), then an improvement in miles per gallon may be seen even though the device is by-passed." The installation instructions are Attachment B.

b. Operation:

"Once the Optimizer unit is attached to the vehicle, there is no routine maintenance necessary. If the unit does not seem to be functioning, then the relay or heating element should be checked. (See Installation Instructions for amp output of heating element.)" The installation instructions are Attachment B.

c. Effects on Vehicle Safety:

"The Optimizer unit appears to be completely safe with no danger to the occupants or vehicle. If for some reason there is a malfunction within the unit, it is very easy to by-pass the unit and restore the fuel line to its prior condition (prior to installation of the device). While in most instances of heating fuel there may be a pressure built up in the fuel line, which could cause vapor lock, we have not had that situation occur because of the condensing unit situated prior to the carburetor. If in some case this should occur, by-passing the unit and re-establishing the fuel line is all that is necessary."

d. Maintenance:

"Our tests have shown that due to the cleaner combustion within the engine itself, the carbon build up on the spark plugs is decreased and necessary maintenance of the automobile will probably be at longer intervals. Our tests suggest that we may be improving the aromatic composition of the fuels used. In order to obtain a more efficient combustion within the engine, timing is advanced in order to utilize the improved gasoline mixture. This timing should be checked periodically, especially after the initial installation. The type of fuel used and whether it is winter or summer stock may necessitate a change in the timing mechanism. If an engine knock is heard, then timing of the vehicle should be re-checked. If the Optimizer unit appears not to be functioning, then the electrical connections and relays should be checked to make sure that the heating element is in good working order. An amp meter should be used to determine if there is approximately 13 to 15 amps being drawn, which should decrease to approximately 10 amps or less when the device and the engine are in normal working order. There are no other maintenance procedures required to insure the correct operation of the Optimizer."

5. Effects on Emissions and Fuel Economy:

a. Unregulated Emissions:

"All information relative to unregulated and regulated emissions is submitted with this application. There appears to be no untoward effects on the environment known to us." This information contained no data on unregulated emissions.

b. Regulated Emissions and Fuel Economy:

The applicant tested the device in several separate test programs. The emission and fuel economy results of these tests are given in Attachments C-4 through C-8.

---

The following sections are EPA's analysis and conclusions for the device.

---

6. Analysis

a. Identification Information:

(1) Marketing Identification:

The models of the device given in Sections 2a and 3f were for both passenger vehicles and heavy-duty trucks. As noted in Section 2a, the diesel models were withdrawn from consideration and the Section 511 evaluation process does not apply to devices for heavy-duty vehicles.

The applicant later informed us that the Optimizer models 500G, 1150G, and 1500G were identical (Attachments G, H, I, and K).

(2) Inventor and Patent Protection:

The patent identified two different basic configurations of the heated catalyst container and several catalyst materials. The device being evaluated was clarified to be of the single catalyst bed configuration shown in Figure 2 of the patent and used only platinum as the active catalyst material (Attachments G, H, I, and K).

b. Description:

(1) As stated in Section 3a, the primary purpose of the Optimizer is to improve fuel economy, increase performance, and reduce engine maintenance while keeping emissions low. This is in agreement with proposed theory of operation and design of the device.

(2) The statement of the applicability of the product to essentially all gasoline-powered passenger cars and trucks is judged to be appropriate.

(3) The theory of operation given in Section 3c attributes the claimed improvement in fuel economy to be principally due to the enhancement of the combustion process by the platinum or other noble metals added to the fuel as it passes through the heated substrate in the Optimizer. A secondary effect was stated to be due to the possible reforming of the fuel due to a low temperature catalytic reaction in the device. However, the theory does not address the fact that ignition timing adjustments are performed as part of the device installation and that such adjustments are capable of improving fuel economy levels even without any retrofit device.

Several efforts referenced in the bibliography do show that changing the ignition timing can cause a change in fuel economy and emission levels to the same degree as were observed in the test data of Section 6d(2). While this phenomenon is well known, manufacturers must consider more than just fuel economy when establishing a timing curve, e.g., ambient conditions, driveability, emissions, fuel variability, and vehicle operating conditions.

The heating of the fuel is claimed to be necessary to cause the platinum on the inert substrate to be introduced to the fuel. The applicant submitted data that showed that heating of the substrate was needed to add the platinum to the fuel and that the concentration was directly proportional to the temperature of the fuel (Attachment C-1). Although these data indicate that platinum is added to the fuel, there is no evidence that the platinum will enhance the combustion process and thereby significantly improve fuel economy.

The catalytic engine study provided by the applicant, Reference 6, did show that a platinum catalyst mesh installed in the combustion chamber of an engine would allow development of a new engine with reduced emissions and improved fuel economy. The best of the engines evaluated in the study showed appreciable improvements over a conventional gasoline engine over some parts of its operating range. However, this was for a fuel-injected engine with a prechamber and a 12 to 1 compression ratio. As a result, this does not demonstrate that platinum in the fuel would reduce the emissions and improve the fuel economy of a conventional gasoline engine.

The possible reforming of the fuel referenced in the application cover letter and Section 3c is indicated by the data given in Attachments C-2 and C-3. However, one test sequence showed no change in aromatics and one test sequence showed a change. There is also the variability of the test methods to be considered. Therefore, these

results are only a very weak indicator of fuel reforming. Furthermore, the effect on fuel economy of a change in the fuel that is this small, could only be established through a much larger test program than was used by the applicant to evaluate the device.

(4) The description of the device given in Section 3d covered two configurations of the Optimizer heating chamber, alternative catalyst materials, and at least two different plumbing installations for the Optimizer model 1150G (previously identified as 500G or 1500G). The model was later identified to be the single catalyst bed configuration (Figure 2 of the patent), using only platinum as a catalyst on an alumina substrate, and having no return flow to the fuel tank (Attachments G, H, I, and J).

The heating element is designed to be self-regulating. It is designed to operate between 150 and 170°F (Attachment H). In the event of an overload, the heating element relay will protect the device but would need to be replaced to restore the system to proper order (Attachments G, H, I, and K).

(5) In Section 3e, the applicant correctly noted that ambient conditions, operating variables, and the vehicle would all influence the vehicle fuel economy and any fuel economy benefit. However, the test results cited do not establish that the user might reasonably expect to get a five to fifteen percent improvement in fuel economy. The data from Automotive Testing Laboratories showed no fuel economy improvement for one vehicle. In no case was an improvement greater than six percent. Also, the emission testing cited showed significant increases in emissions in many cases. (The percentage changes in HC and CO emissions for the highway cycle occur at very low emission levels and are therefore not as significant as the $NO_x$ levels.) These data and the road test data are further discussed in Section 6d(2).

The increase in vehicle performance was not formally evaluated in this testing. The applicant stated that the drivers felt the vehicles performed better (Attachments G, H, I, and K).

The claims for reduced maintenance were based on the expectation that the spark plugs would last longer since deposits were less than expected. However, they may deteriorate quicker due to the higher temperatures. Also, this was largely based on their experience with other vehicles. Since vehicle emission control technology has been changing yearly, such maintenance assessments need to be based on comparisons with vehicles of similar technology.

The maintenance claims do not address the need for the inline fuel filter to be changed every 7,000 to 10,000 miles as prescribed in the installation instructions. This is at least twice as frequently as most manufacturers recommend.

(6) The cost of the device plus installation would probably be at least $460 for those users who have the device installed by a mechanic. This is based on a retail price of $390.00, $10.00 for miscellaneous parts, and installation requiring approximately two hours at $30.00 per hour.

c. Installation, Operation, Safety and Maintenance:

(1) Installation - Instructions, Equipment and Skills Required:

The instructions are judged to be adequate for the installation of the device. We agree with the statement of the applicant in Section 4a that an automotive mechanic would be able to install the device with the standard complement of tools. Persons of average mechanical skills should also be able to install the device although the necessary hoses, fittings, and wiring are not provided with the device.

The installation instructions specify that the ignition timing is to be advanced five degrees unless the vehicle exhibits spark knock. In this event, the timing is to be retarded one or two degrees until the knock disappears. This was subsequently clarified to require advancing the timing one or two degrees after the 1,000 mile break-in period and has been incorporated in the instructions (Attachments B, G, H, I, and K). The instructions are not consistent with Section 4d in that they do not state that the timing should be periodically checked after installation.

The additional electrical load may lower the engine idle speed, especially on the smaller displacement engines. The installation instructions do not specify checking the idle speed when the device is operating.

(2) Operation:

The operation of the device is automatic. If the device fails to function, the instructions contain enough information to allow a mechanic to check out the system. However, although the applicant noted in Section 4b that the operator should have the device checked if he feels the device is not functioning, no specific information is provided to indicate to the operator that the device is not functioning properly. Also, the instructions neither describe engine knock nor alert the operator to knock as noted in Section 4d.

Although the heating element is not "On" when the ignition switch is in the "Off" or start position, the appreciable electrical load could adversely affect vehicles with marginal electrical capacity or under some operating conditions, e.g., idle or heavy usage of electric power accessories.

(3) Effects on Vehicle Safety:

The device is judged to be able to be built and installed so that it presents no safety hazard to the vehicle or operator.

(4) Maintenance:

The claims of a potential reduced maintenance for spark plugs as stated in Section 4d are based on limited preliminary data and, as noted in Section 6b(5), require verification. Also the suggestions given in Section 4d to recheck timing, to be alert for engine knock, and to check device operation are neither given in the installation instructions nor provided separately to the operator.

d. Effects on Emissions and Fuel Economy:

(1) Unregulated Emissions:

The applicant submitted no data on unregulated emissions. Since the installation of the device is claimed to alter the combustion process, there is a potential for unregulated emissions to be affected.

The device with the advance in ignition timing did alter the combustion process as evidenced by higher $NO_x$, an indicator of higher peak combustion temperature and pressure. However, it is judged that this change is unlikely to appreciably affect unregulated emissions.

(2) Regulated Emissions and Fuel Economy:

The applicant did submit test data in accordance with the Federal Test Procedure and the Highway Fuel Economy Test. These two test procedures are the primary ones recognized by EPA for evaluation of fuel economy and emissions for light-duty vehicles.*

---

*The requirement for test data following these procedures is stated in the policy documents that EPA sends to each potential applicant. EPA requires duplicate test sequences before and after installation of the device on a minimum of two vehicles. A test sequence consists of a cold start FTP plus a HFET or, as a simplified alternative, a hot start LA-4 plus a HFET. Other data which have been collected in accordance with other standardized procedures are acceptable as supplemental data in EPA's preliminary evaluation of a device.

(a) LA-4 and Highway Test Results

Table I
Summary of Test Results Submitted by Applicant**
Emissions in grams per mile, fuel economy in miles per gallon

| | | Hot LA-4 | | | | HFET | | | |
|---|---|---|---|---|---|---|---|---|---|
| Vehicle | Configuration | HC | CO | NOx | MPG | HC | CO | NOx | MPG |
| 1980 Chevrolet 4.4 liter V-8 Vehicle #7957 | Baseline | .19 | .82 | .88 | 17.3 | .06 | .16 | 1.04 | 22.7 |
| | Optimizer after 500 miles | .38 | .28 | 1.10 | 17.8 | .11 | .01 | 1.33 | 23.6 |
| | Average Change | +101% | -67% | +25% | +3% | +77% | -91% | +27% | +4% |
| 1981 Oldsmobile 3.8 liter V-6 Vehicle #8982 | Baseline | .17 | .61 | 2.69 | 20.5 | .07 | .23 | 1.45 | 26.2 |
| | Optimizer after 500 miles | .23 | .67 | 3.44 | 20.4 | .10 | .15 | 2.19 | 26.1 |
| | Average Change | +35% | +10% | +28% | -1% | +30% | -34% | +51% | 0% |
| 1980 Chevrolet 4.4 liter V-8 Vehicle #0267 | Baseline | .07 | .22 | .66 | 17.4 | .02 | .04 | .88 | 21.9 |
| | Optimizer after 1000 miles | .09 | .22 | .86 | 18.0 | .03 | .00 | .91 | 23.3 |
| | Average Change | +26% | -3% | +30% | +3% | +26% | -98% | +3% | +6% |
| 1980 Oldsmobile 4.3 liter V-8 Vehicle #2430 | Baseline | .11 | .04 | 1.36 | 19.2 | .06 | .03 | 1.54 | 24.4 |
| | Optimizer after 1000 miles | .11 | .05 | 1.63 | 20.1 | .03 | .00 | 2.34 | 25.7 |
| | Average Change | +1% | +36% | +20% | +5% | -42% | -100% | +52% | +5% |

Note: The underlined values are statistically significant at a 90% confidence level. However, due to the overall low level of HC and CO emissions for the HFET, the impact of these changes on vehicle emission levels, even where statistically significant, would be minimal.

These data were analyzed by several statistical methods (student's "t" test, paired "t" test, and two-factor analysis of variance) to determine if the changes were statistically significant for either an individual vehicle or a group of vehicles.

---

**Summary of the laboratory test results from Attachments C-4 through C-7. This summary includes only the baseline tests and the Optimizer tests with the timing adjusted as prescribed in the device installation instructions. Vehicles #7957 and #8982 were tested with a fuel return line to the tank. Vehicles #0267 and #2430 were tested without a return line per the latest installation configuration.

The student's "t" test is used to compare the sample means of two populations. It is useful when there are only a few data samples. It allows the data to be readily compared at a given confidence level. The individual test results given in Attachment C were compared (i.e., Chevrolet #7957 LA-4 baseline tests to Chevrolet #7957 LA-4 Optimizer tests, Chevrolet #7957 HFET baseline test to Chevrolet #7957 HFET Optimizer tests, etc.). This analysis showed that:

HC emissions - Installation of the Optimizer caused statistically significant increases and decreases in HC emissions for some of the vehicles. LA-4 HC emissions increased for three vehicles; however, the change was minimal for one of these three. HFET HC emissions both increased and decreased. This would have minimal impact due to the low HC emission levels for the HFET.

CO emissions - Installation of the Optimizer caused statistically significant decreases for two vehicles. LA-4 CO emissions decreased for one of the four vehicles. HFET CO emissions decreased for two vehicles but this would again have minimal impact due to the low CO emission levels for the HFET.

$NO_x$ emissions - Installation of the Optimizer caused large and statistically significant increases in $NO_x$ emissions for all vehicles. LA-4 $NO_x$ emissions increased for all vehicles. HFET $NO_x$ emissions increased for three of the four vehicles. $NO_x$ emissions increased an average of 30%. This would have an appreciable adverse effect since the $NO_x$ emission levels are considerably higher than the HC or CO levels.

MPG - Installation of the Optimizer caused small but statistically significant increases in mpg for three of the four vehicles for both the LA-4 and the HFET.

The student's "t" test of paired data is used to sample means of paired observations. It is a more specialized usage of the "t" tests and has the same features as the "t" test. The emission and fuel economy averages given in Table I were compared for both the LA-4 (baseline vs. Optimizer for the four vehicles as a group) and the HFET. This paired "t" test data analysis showed that there was no statistically significant change in emissions and fuel economy due to the Optimizer device for the group of four vehicles for both the LA-4 and the HFET. Since these data have different emission levels, the percentage changes were also similarily compared to determine the relative effect of the device. This analysis showed that the only statistically significant change due to the device for the group of four vehicles was the 20 to 30 percent increase in NO emissions for the LA-4.

The two-factor analysis of variance (two-factor ANOVA) is used to compare the means when there are several test variables (i.e., for the LA-4 with or without device for several vehicles). It can be used to test if there is or is not a significant interaction between test variables. Only $NO_x$ emissions and fuel economy for both the LA-4 and HFET were analyzed since the preceding analysis had indicated these items were most affected. The two-factor ANOVA showed that:

$NO_x$ emissions - Optimizer caused a large (percentage) and statistically significant increase in $NO_x$ emissions for both the LA-4 and HFET.

MPG - Optimizer caused a small (percentage) but statistically significant increase in vehicle fuel economy for both the LA-4 and HFET.

(b) Discussion of Test Results

As was noted in the preceding analysis of the test results, the overall expectation is that the use of the Optimizer would cause $NO_x$ emissions to sharply increase, fuel economy to increase to a smaller degree, and hydrocarbon emissions to tend to increase. Thus, there is a need to distinguish between the effects attributable to the device alone and the effects attributable to the ignition timing adjustments performed when installing the device.

The references in the bibliography (1-5, 7, 8) clearly show that the results to be expected from the prescribed five degree advance in ignition timing are a sharp percentage increase in $NO_x$ emissions, a small percentage increase in fuel economy, and a small increase in hydrocarbon emissions.*

The tests conducted without the device installed, but with the timing advanced five degrees (Attachments C-4 and C-5), show the same trends in emissions and fuel economy. However, the tests conducted with the device installed but without the timing advance (Attachments C-6 and C-7), showed an increase in $NO_x$ emissions for both the city and highway cycles and an increase in fuel economy for the highway cycle. After the timing was advanced, $NO_x$ tended to further increase and fuel economy increased for the city cycle only.

Thus, based on the data and references, it appears any changes are due principally to the ignition timing change performed when installing the device.

EPA has tested other devices that caused emissions to increase. Our enforcement office determined that installation of these devices by the aftermarket and repair industry would be considered tampering. Therefore, they are prohibited from installing the devices.

(c) Road Test Results

The applicant supplied road test results for eleven light-duty vehicles (Attachment C-8). For five of these, the device was installed without the return line in accordance with the instructions of the applicant.

These were relatively well-controlled road tests. The vehicles traveled several hundred miles over a prescribed highway road route. The test vehicle was tested both with and without the device. There was mileage accumulation with the device for break-in. An identical chase vehicle was used as a control.

---

*Ignition or spark retard, which is the opposite of ignition advance, is an emission control technique that has been extensively used to reduce HC emissions. Ignition retard will also reduce $NO_x$ emissions and fuel economy.

These tests showed an increase in fuel economy for the vehicles using the Optimizer. This change is in agreement with our expectations for the effect of the ignition timing adjustment (done when installing the device) and the trends observed in the lab data..

(d) Cost Effectiveness

Since most purchasers would buy the Optimizer to save on fuel expenses, the cost of the device should be compared to its benefits. As noted above, the overall expectation is that the Optimizer itself would not provide a fuel economy benefit although the recommended timing adjustments done when installing the device could slightly improve the fuel economy of some vehicles. If a particular vehicle should benefit by 5%, it would take over 170,000 miles before the device would pay for itself.*

7. Conclusions

EPA fully considered all of the information submitted by the applicant. The evaluation of the Optimizer device was based on that information and our engineering judgment. The overall conclusion is that, for most vehicles, the device and the prescribed ignition timing adjustments of the engine will cause a small improvement in fuel economy and a large increase in $NO_x$ emissions. These changes are attributed to be due principally to the five degree advance in ignition timing rather than the device itself.

Despite improvements in fuel economy, other devices evaluated by EPA that have increased exhaust emissions have been considered tampering by the EPA's Field Operations and Support Division.

ADDENDUM

After the completion of the evaluation, the applicant informed EPA that the device which was evaluated would not be marketed. He stated that the device had undergone considerable changes and that they intended to submit a new application on this new model that they expected to market. However, since no application has been submitted, EPA is unable to judge if the new device has any emission or fuel economy benefits.

EPA knew when the application was submitted that there were differences between the device being evaluated and the device tested (both hardware and installation differences). However, since the applicant stated that the test data were still valid and applicable, they were used for evaluating the device.

---

*Assumes the cost of the model 1200G or 1500G of $390 plus $60 for installation, with baseline fuel economy at 25 miles per gallon and gasoline costs of $1.40 a gallon.

This additional correspondence between the applicant and the government has been added to this report to complete the package of information on the device.

FOR FURTHER INFORMATION CONTACT: Merrill W. Korth, Emission Control Technology Division, Office of Mobile Sources, Environmental Protection Agency, 2565 Plymouth Road, Ann Arbor, MI 48105, (313) 668-4299.

## BIBLIOGRAPHY


1. Miles, Donald L. and George W. Niepoth, "Optimizing Engine and Car Design for Fuel Economy and Emissions", SAE Paper 760855.

2. Whitmyer, Alan, "The Effect of Ignition Timing Modifications on Emissions and Fuel Economy", Environmental Protection Agency; Technology Assessment and Evaluation Branch, Report 76-4.

3. Novak, J. M. and P. N. Blumberg, "Parametric Simulation of Significant Design and Operating Alternatives Affecting the Fuel Economy and Emissions of Spark-Ignited Engines", SAE Paper 780943.

4. Currie, James H., David S. Grossman, and James J. Gumbleton, "Energy Conservation with Increased Compression Ratio and ELectronic Knock Control", SAE Paper 790173.

5. Trella, Thomas, "Spark Ignition Engine Fuel Economy Control Optimization - Techniques and Procedures", SAE Paper 790179.

6. Thring, R. H., "The Catalytic Engine," Platinum Metals Review, Vol. 24, No. 4, October 1980. A copy of this paper was provided with Attachment I.

7. Honig, G., H. Decker, and S. Rohde, "Electronic Spark Control Systems, Part I: Microcomputer-Controlled Ignition System, Part II: Bosch Knock Control", SAE Paper 810059.

8. Trella, Thomas J., "Fuel Economy Potential of Diesel and Spark Ignition-Powered Vehicles in the 1980s", SAE Paper 810514.

## List of Attachments

| | |
|---|---|
| Attachment A | Patent Application (provided with 511 Application) |
| Attachment B | Installation instructions (provided with 511 application) |
| Attachment C | Laboratory and road test results (provided with 511 application) |
| Attachment D | Letter of May 4, 1982 from EPA to Ms. Vera Anderson of Optimizer Co. responding to her May 3, 1982 letter for information on the 511 application and evaluation process. Similar letters were sent on June 23 and October 6 in response to requests in June and October for additional packets of 511 information. |
| Attachment E | Letter of July 20, 1982 from EPA to Dr. Leon I. Rosky of Optimizer, Ltd. providing an EPA recommended test plan for the Optimizer device. |
| Attachment F | Letter of December 6, 1982 from Dr. Rosky requesting a 511 evaluation of the enclosed application. |
| Attachment G | Letter of December 28, 1982 from EPA to Dr. Rosky acknowledging receipt of 511 application and requesting clarification and additional information. |
| Attachment H | Letter of January 18, 1983 from Dr. Rosky to EPA responding to EPA request. |
| Attachment I | Letter of Febraury 7, 1983 from EPA to Dr. Rosky summarizing recent conversation and requesting additional clarification. |
| Attachment J | Letter of February 8, 1983 from Dr. Rosky to EPA providing various pieces of information about the Optimizer. |
| Attachment K | Letter of February 18, 1983 from Dr. Rosky to EPA responding to EPA request. |
| Attachment L | Letter of March 14, 1983 from Dr. Rosky to EPA discussing the March 4, meeting and EPA data analysis. |
| Attachment M | Letter of March 28, 1983 from EPA to Dr. Rosky responding to Optimizer letter of March 14, 1983. |

On March 4, 1983 the applicant also provided a booklet of information about the Optimizer. Since this information was essentially the same as that provided with the application, a copy of it is not attached.

The following attachments are correspondence between the applicant and the government that occurred after the report had been written and reviewed. They are included to incorporate the additional discussions that occurred between writing and publication of this report.

| | |
|---|---|
| ATTACHMENT N | Letter of May 12, 1983 from Dr. Rosky to EPA discussing the previous testing of the device. |
| ATTACHMENT O | Letter of May 20, 1983 from Dr. Rosky to EPA further discussing the prior testing of the device and requesting changes to report. |
| ATTACHMENT P | Letter of June 9, 1983 from Senator Donald W. Riegle, Jr., to EPA requesting that EPA review its evaluation of the device and meet with the applicant. |
| ATTACHMENT Q | Letter of June 14, 1983 from EPA to Dr. Rosky responding to Optimizer letters of May 12 and 20, 1983. |
| ATTACHMENT R | Letter of July 14, 1983 from EPA to Senator Donald W. Riegle, Jr., responding to his letter of June 9, 1983. |
| ATTACHMENT S | Letter of July 18, 1983 from EPA to Dr. Rosky providing draft copies of final report and Federal Register notice for EPA evaluation of the Optimizer device. |
| ATTACHMENT T | Letter of July 28, 1983 from Dr. Rosky to EPA discussing the evaluation report of the Optimizer device. |
| ATTACHMENT U | Letter of August 25, 1983 from EPA to Dr. Rosky responding to Optimizer letter of July 28, 1983. |

Our Ref. OPL-100-A

# DEVICE FOR IMPROVING FUEL EFFICIENCY AND METHOD OF USE THEREFOR

## ABSTRACT OF THE DISCLOSURE

A device for increasing the fuel efficiency in an internal combustion engine having a fuel supply conduit connecting a fuel supply and a carburetor, a hollow housing disposed in fluid communication with the fluid supply conduit between the fuel supply and the carburetor or firing chambers. A heat source, such as a heating element is mounted within the tubular member for heating the fuel flowing through the hollow housing. While flowing through the housing, the fuel is in intimate contact with metallized pellets of a metal, such as a noble metal deposited on a substrate. The pellets are disposed within the housing. In an alternate embodiment, hereof, two types of catalyst are disposed within the housing, one richer in metal content than the other. In practicing the present invention, the fuel passes through the housing and issues therefrom at a temperature less than 100°C.

## BACKGROUND OF THE INVENTION

### Field of the Invention:

This invention relates, in general, to internal combustion engines and, more specifically, to fuel/air mixing systems for internal combustion engines.

### Description of the Prior Art:

Among the growing concerns of today's motorists are an adequate supply of fuel for vehicles and the rising costs thereof. Coupled with these concerns are the enhanced awareness of the ecological damage resulting from the emission of pollutants from fuel-burning, internal combustion engine powered, motor vehicles. In an internal combustion engine, the pollutants include oxides of nitrogen, carbon monoxide and unburned hydrocarbons. In addition to creating an ecological problem, the unburned hydrocarbons also contribute to inefficient engine of the engine. Further, in existing internal combustion engines, a measurable portion of the fuel supplied to the engine remains unburned and is discharged into the atmosphere. This not only pollutes the atmosphere, but it also results in uneconomical engine operation and poor engine performance.

Many attempts have been made to ensure a more complete combustion of the fuel in internal combustion

engines. Many of these attempts have involved the utilization of a vaporizing apparatus to vaporize the fuel/air mixture before it is passed to the combustion chambers of the engine. It is also well known to provide suitable heating apparatus within the carburetor to heat the fuel/air mixture to a temperature more conductive to complete combustion prior to its entry into the combustion chambers. Such vaporizing and heating apparatus are typically mounted between the carburetor and the intake manifold of the engine so as to vaporize and/or heat the final fuel/air mixture passing therebetween.

Other attempts known in the prior art include the introduction of adjuvants to the fuel/air mixture prior to its introduction into the combustion chamber. However, such attempts at improving engine efficiency and performance by heating or vaporizing the fuel/air mixture prior to its entry into the combustion chambers have met with limited success at reducing engine pollutants.

Apart from the techniques used to improve engine performance by more completely burning the fuel/air mixture, additional pollutant control devices, such as the now prevalent catalytic converter, have come into use to reduce the amount of pollutants issuing from vehicle exhaust systems.

Such catalytic converters, while greatly reducing the amount of gaseous contaminants issuing from

the vehicle exhaust systems, are quite costly and require modification of the vehicle for their installation. A large part of the cost is due to the quantity of platinum based materials used in their construction. Such converters also require specific types of fuel and, if wrong fuel is used, become clogged. This not only reduces their effectiveness in reducing air pollutants issuing from the vehicle but also severly impairs the engine performance.

Thus, the prior art has utilized separate devices to either improve engine performance or reduce pollutants issuing from the vehicle exhaust system. Such devices, while functioning satisfactorily to a certain extent in achieving the intended purpose, i.e., fuel efficiency improvement or pollutants reduction - then do little or nothing at reducing the engine concomitant for which they are not intended.

Thus, it would be desirable to provide a fuel/air mixing system for use with internal combustion engines which overcomes the problems with prior art devices in improving engine efficiency, i.e., decreasing the amount of fuel utilized per distance driven, as well as reducing the quantity of air pollutants issuing from the vehicle exhaust system. It would also be desirable to provide a fuel/air mixing system which is constructed as

a single device and which functions to both improve engine performance and reduce pollutant levels. It would also be desirable to provide a fuel/air mixing system which can be easily incorporated in existing internal combustion engine designs without extensive modification thereof. Finally, it would be desirable to provide a fuel/air mixing system which is economical in cost.

## SUMMARY OF THE INVENTION

There is disclosed herein a device for increasing the fuel efficiency of an internal combustion engine and a method of use therefor. The device is interposed a fuel supply and a combustion chamber. In gasoline engines, the device is interposed a fuel supply and a carburetor. The device includes a hollow housing disposed in fluid communication with the fuel supply conduit intermediate the fuel supply and the combustion chamber.

Disposed within the housing are a plurality of metallized pellets. The pellets, generally, comprise a noble metal deposited on an inert substance and are used to activate or "catalyze" the fuel passing through the housing.

Optionally, a heat source, such as a heating rod or element is disposed within the housing for elevating the temperature within the housing. Where used, the heating element is energized by the vehicle battery. A time-delay switch can, also, be incorporated into the

system to regulate the temperature created by the heating element.

In an alternate embodiment hereof, the pellets disposed within the housing comprise two classes having different levels of metal deposited thereon. In this embodiment, the housing comprises at least two internal chambers in fluid communication. In one chamber is disposed a first class of pellets with the second class of pellets being disposed in the second chamber. The fuel passes through both chambers before being fed to the combustion chamber.

In practicing the present invention, the fuel enters the housing as a liquid and exits as a liquid therefrom. The temperature within the housing varies from ambient conditions to less than about 100°C.

The device of the present invention overcomes many of the problems of similar prior art devices in improving engine performance and efficiency; while, at the same time, significantly reducing the levels of pollutants issuing from the vehicle exhaust system. In addition, the pressure regulator of the present invention achieves both desired features in a single unit as compared to prior art attempts which maximized engine efficient or reduced pollution levels by use of separate devices installed on the vehicle.

Furthermore, the device of the present invention is both economical in cost and easy to install on conventional internal combustion engines without requiring modifications thereto.

## BRIEF DESCRIPTION OF THE DRAWING

The various features, advantages and other uses of the present invention will become more apparent by referring to the following detailed description and drawing in which:

FIG. 1. is a flow diagram showing the deployment of the device of the present invention.

FIG. 2. is a cross-sectional view of the device of the present invention;

FIG. 3. is a cross-sectional view of an alternate embodiment of the device of the present invention, and

## DESCRIPTION OF THE PREFERRED EMBODIMENTS

Throughout the following description and drawing, identical reference numbers are used to refer to the same component shown in multiple figures of the drawing.

Referring now to the drawing, and to Figure 1 in particular, there is illustrated a device generally indicated at 10, in accordance with the present invention.

Although the present invention will work with equal efficacy for both gasoline and diesel fuel engines, the present invention for purposes of clarity will be described with reference to a gasoline-burning internal combustion engine. Furthermore, the invention will work in connection with boats, motorcycles, etc. Again, however, for facility, the ensuing description will be made with reference to an automobile.

In a conventional vehicle, the fuel supply 12 is connected to the carburetor 14 of the engine via a fuel supply conduit, shown generally by reference number 16. A fuel pump 18 is disposed in fluid communication with the fuel supply conduit 16 to pump fuel from the fuel supply 12 to the carburetor 14.

As is conventionally known, the carburetor 14 functions to mix fuel and air in a proper ratio and to deliver the fuel/air mixture to the intake maniford 20 of the engine wherein the fuel/air mixture is transferred to the combustion chambers in the cylinders of the engine, not shown, and ignited to produce the explosive forces for driving the pistons of the engine which propel the vehicle.

According to the teachings of the present invention, the device 10 includes a housing 22 disposed in fluid flow communication with the fuel supply conduit 16 between the fuel supply 12 and the carburetor 14.

Preferably, the device 10 is disposed in fuel supply conduit 16 between the fuel pump 18 and the carburetor 14. A check valve 24 is disposed between the fuel pump 18 and the device 10 to provide one way fuel flow therebetween.

The hollow housing 22 is of substantially cylindrical configuration, and is formed of a metallic material, such as steel or the like. The housing may be formed of any other material which is not reactive with the fuel. Likewise, the housing may be heat conductive or insulative, as required. The housing includes end or top and bottom wall members 25 and 26 respectively secured to opposed ends thereof to completely seal the interior of the housing 22. Inlet and outlet ports 28 and 30, respectively, are formed therein. The inlet port 28 is preferably formed in the side wall or bottom wall of the housing 22. A segment 32 of the fuel supply conduit 16 is secured to the port in fluid tight sealing relationship. The outlet port 30 is preferably formed in the end wall member 25. Another segment 31 of the fuel supply conduit 16 is secured to the outlet port, as shown.

It is contemplated in the practice of the present that the interior of the housing be heated. The heating can be achieved either from the ambient, i.e., the engine compartment or the atmosphere or from a heating element incorporated into the device. The heat

source maintains the interior of the housing at a temperature ranging from about the ambient to a temperature of less than 100°C. Preferably, the temperature in the housing is maintained at a temperature of from about 25°C to about 90°C. Hence in cold climates, and without a heat source incorporated within the device, the housing is heat conductive. Likewise, in extreme heat, the housing should demonstrate some insulative properties.

Preferably, however, the heat source is incorporated into the device. Where used, the internal heat source comprises a heating element 34.

The heating element 34 is securely mounted within the housing 22. Preferably, the heating element is in the form of a high watt density heater having an incoloy sheath material disposed about the exterior thereof.

The heating element 34 is mounted to the housing 22 by any suitably means, such as external threads 36 formed adjacent the first end of the heating element 34 which threadingly engage an opening 38 formed in the housing 22. In this manner, the heating element 34 may be inserted and secured within the housing 22 as well as removed for repair or replacement. As shown in Figure 2, a pair of electrical connections or wires extend outward from the heating element 34 and are adapted to be connected to a suitable power source, such as the automobile

battery (not shown), or the like, for providing electrical current to the heating element 34.

A suitable temperature sensing means (not shown) may be mounted in the housing 12 for controlling the temperature generated by the heating element. Suitable electrical connecting means, not shown, extend from the sensing unit to a conventional temperature control means so as to control the connection of electrical current to the heating element 34 to thereby maintain the temperature of the heating element 34 within the desired temperature range.

Likewise, because of the energy required by the heating element is quite high, a time-delay 40 is interposed the heating element and the battery. The time-delay 40 is a conventional relay switch which interrupts power flow to the heating element when the engine of the vehicle started.

As shown in the drawing, disposed within the housing are a plurality of pellets 42.

The pellets 42 generally comprise a metallized pellet of a metal deposited on an inert support or substrate. The metal deposition techniques for making such pellets are well known and do not form part of the present invention.

The metals which are employed herein include for example, noble metals, carbides and the like, as well

mixtures thereof. Representative noble metals include platinum, nickel, palladium, rhenium, ruthenium, and the like. Useful carbides include titanium carbide, tungsten carbide, as well as mixtures thereof. Preferably, the metal is a noble metal and, in particular, platinum.

The inert or non-fuel reactive support or substrate are those conventionally deployed, such as silica, alumina, clays and the like. Preferably, the support of substrate is alumina.

The pellets 42 ordinarily have a mesh size ranging from about 1/32" in diameter to about 1/8" in diameter, and are tightly compacted within the housing.

In deploying alumina-supported platinum pellets, the purity of the platinum will range from about 0.1% to about 10%, in accordance with general manufacturing techniques. Preferably, the purity or concentration of platinum will range from about 0.1% to about 1.0%.

In practicing the present invention, liquid fuel is pumped into the housing 22 through which it passes. Within the housing, the fuel contacts the pellets and issues from the housing as a liquid. Although not wishing to be bound by any theory, it would appear that at the temperatures employed that some metal is solubilized and entrained into the fuel flow. The presence of the noble metal within the hydrocarbon fuel effectively

increases the total combustion thereof. Hence the fuel efficiency of the internal combustion engine is improved.

It should, also, be noted with respect hereto, that as the fuel contacts the metallized pellets or "bubbling" effect occurs, wherein gases appear to be liberated from the fuel. These gases remain in the fuel and are released at the carburetor.

Referring now to Figure 3 there is shown therein an alternate embodiment of the present device, generally, indicated at 110. The device 110 includes a housing 112 fabricated similarly to the housing 12. The housing 112 has a hollow interior and is substantially cylindrical in nature. A member 114 is disposed within the housing 112 and as concentric therewith. The housing 112 and member 114 cooperate to divide the device 110 into two chambers 116, 118, respectively, interiorly thereof. The member 114 has ports 120 formed therein which provide fluid communication between the chambers.

A fuel inlet 121 opens into the inner chamber 118 and a fuel outlet 122 communicates with chamber 116 to permit fuel to exit therefrom. A heating element 124, where used, is disposed within the interior chamber, as shown.

In accordance with this embodiment of the present invention, each chamber is packed with metallized

pellets 126, 128, respectively. However, the metal concentration of the pellets within chamber 118 is higher than the metal concentration of the pellets in the chamber 116. The metal concentration of the metal pellets in the chamber 118 is about twice that of the pellets in the outer chamber 116. For example, assuming alumina-supported platinum pellets are employed, pellets containing about 0.6% platinum are disposed in the exterior chamber and pellets having a platinum concentration of about 0.3% are disposed in the outer chamber 116.

The present invention further contemplates a switching device 130 for contracting the heating element 124. The switching device 124 is in electrical communication with the wires extending from the heating element to the power source. The switching device is a multi-positioned switch for varying the electrical load to the element over a range from "off" to full energy flow. The switch is manually operable and conveniently located, such as on the dashboard of an automobile.

Having, thus, described the invention, what is claimed is:

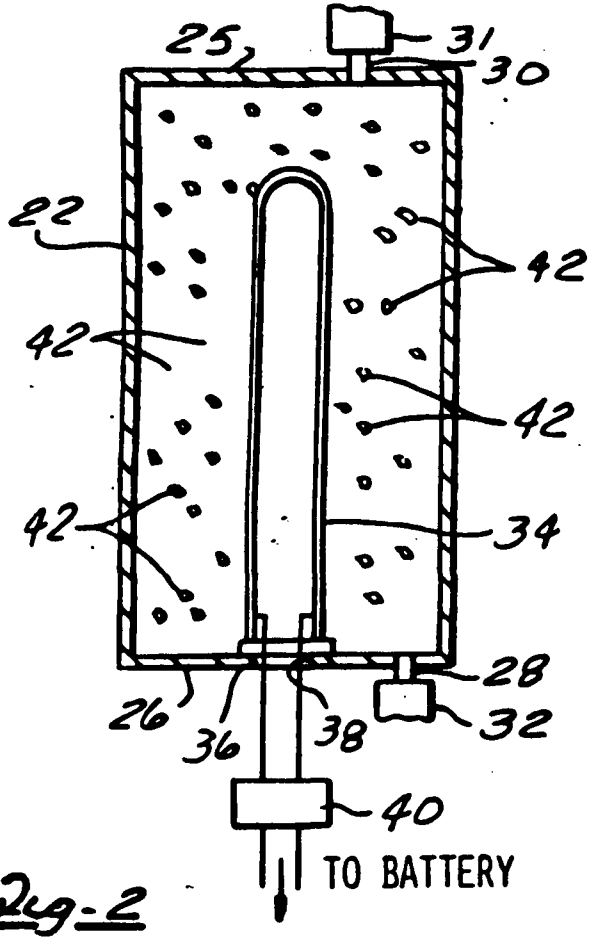


Fig-2

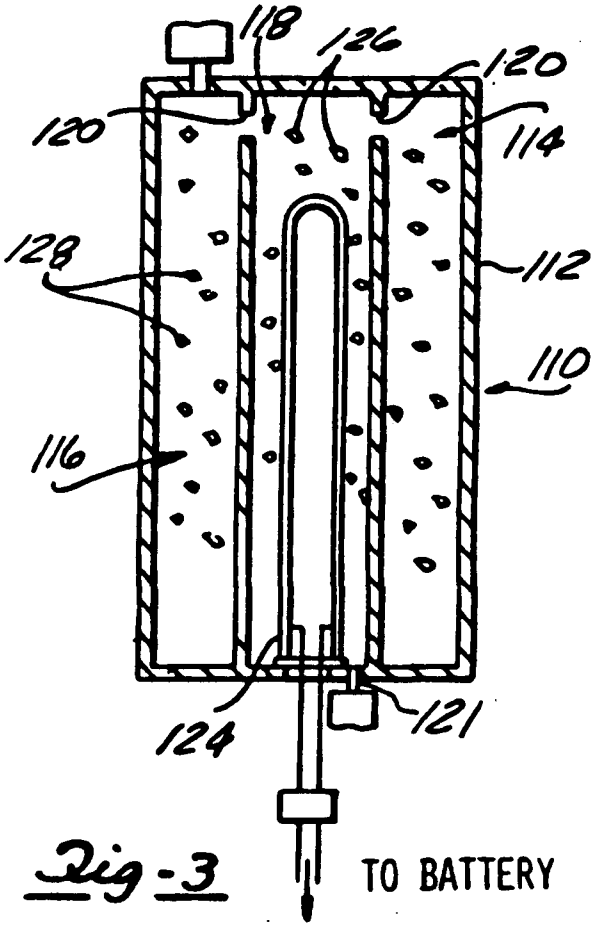


Fig-3

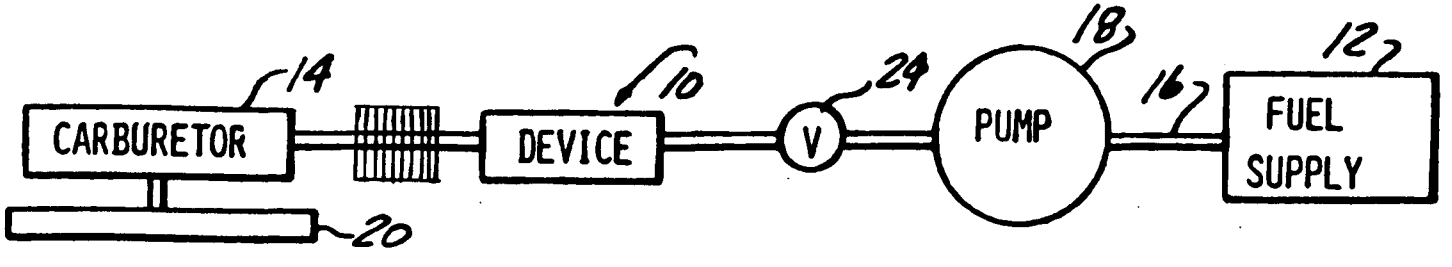


Fig-1

Optimizer® Ltd

A-1.

# INSTALLATION INSTRUCTIONS

## Models No. 1150G and No. 1200G (Patent Pending)

1. Mount the Optimizer on the fender well on the same side of the engine as the fuel pump. The Optimizer should be in the vertical position. Be careful not to bend the wires at the base of the unit.

2. Mount the condenser in the horizontal position in front of the radiator in order to receive as much air flow as possible.

3. Connect a high quality gas line material (preferably with nylon cord reinforcement) from the outlet of the Optimizer to the inlet of the condenser.

   a. The top hole on the condenser must be the inlet.

   b. The bottom hole of the condenser must be the outlet.

4. Cut the gas line near the carburetor. Connect the line from the fuel pump to the inlet of the Optimizer.

5. Install the inline filter between the outlet of the condenser and the carburetor.

   a. Filter should be changed every 7,000 to 10,000 miles.

6. Install the relay on the fire wall or the fender well near the Optimizer.

   a. The white wire (post "B") on the bottom of the relay is the ground wire and should be connected to one of the wires from the Optimizer, and then to a good ground.

6. (Con't)

b. The brown wire (post "5") on the bottom of the relay should be connected to the other wire on the Optimizer using the connector provided.

c. The red wire (post "7") on the bottom of the relay goes to a battery source (the battery itself, or to the back of the alternator where the battery wire is found).

d. The yellow wire (post "A") on the bottom of the relay should be connected to an ignition source which only comes on when the car is operating. No current should flow when the "accessories" side of the ignition switch is on. The fuse box usually contains an ignition plug. This would be a good source.

e. Using an amp meter, check to see that there is approximately 13 to 15 amps being initially drawn by the heating element, which should decrease to 10 amps or less when the device and engine are in normal working order.

7. Check the wire and hose clamps to make sure that all are properly connected and make sure that no kinks or sharp bends are present in the gas line. Start the engine and, while it is warming up, check for leaks in the gas line.

8. Now that the engine is warmed to operating temperature, advance the timing 5 degrees. In some cases, a spark knock may be heard. If so, move the timing back 1 or 2 degrees until the spark knock disappears. In those vehicles where knock is heard within the 5 degrees advance, it is recommended that an attempt be made to increase to the full 5 degree advance after the 1,000 mile break-in period.

9. The Optimizer is now installed. A break-in period of 1,000 miles is necessary to see the maximum effects from the device. A well tuned engine will insure the greatest benefit from the Optimizer.

**MODEL #1150G and #1200G – Gasoline Units** (Patent Pending)
(Automobile and 4/6/8 Cylinder Light Duty Trucks)

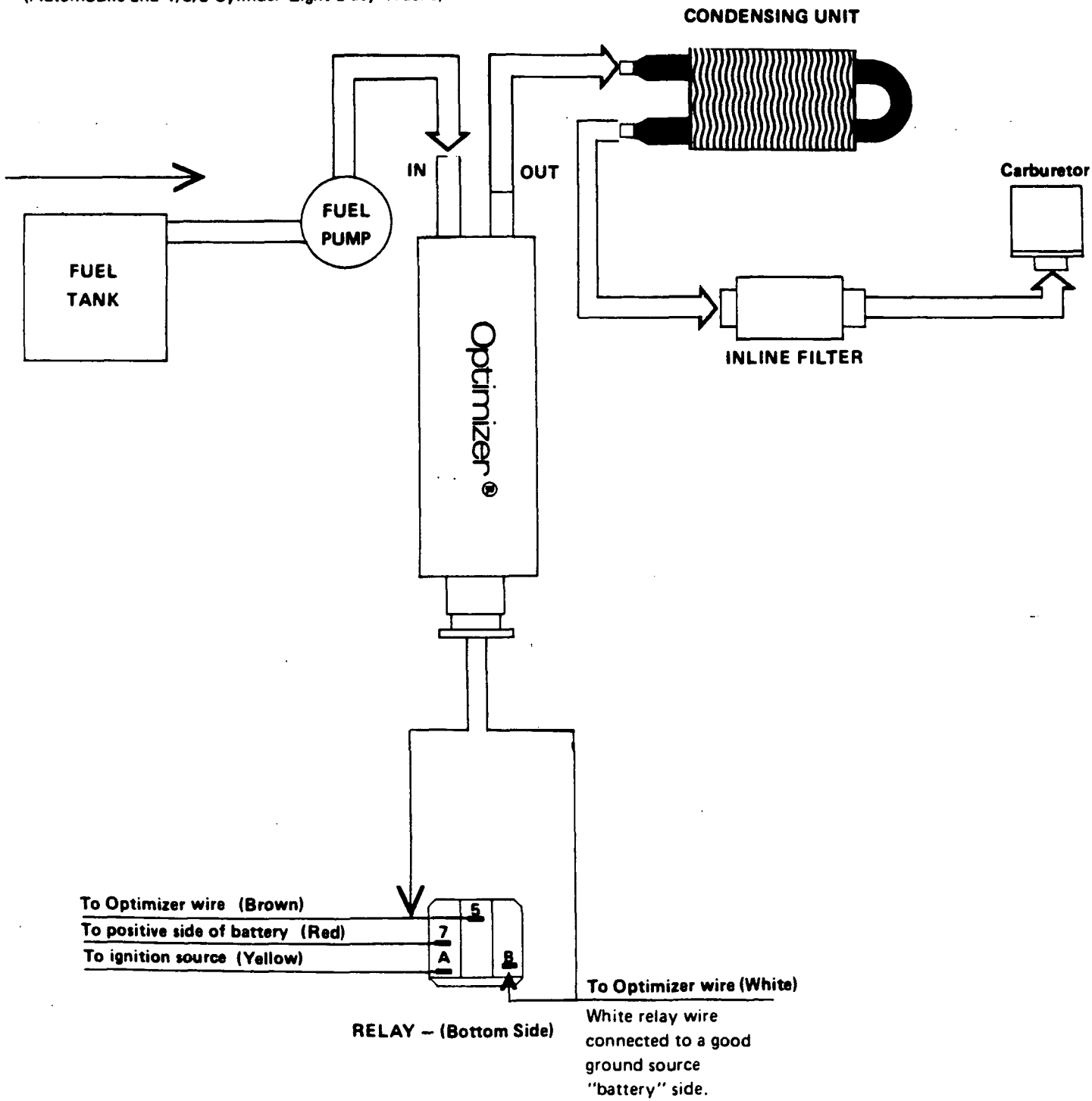

**MODEL #2200G - Gasoline Unit** (Patent Pending)
(Heavy Duty Trucks)

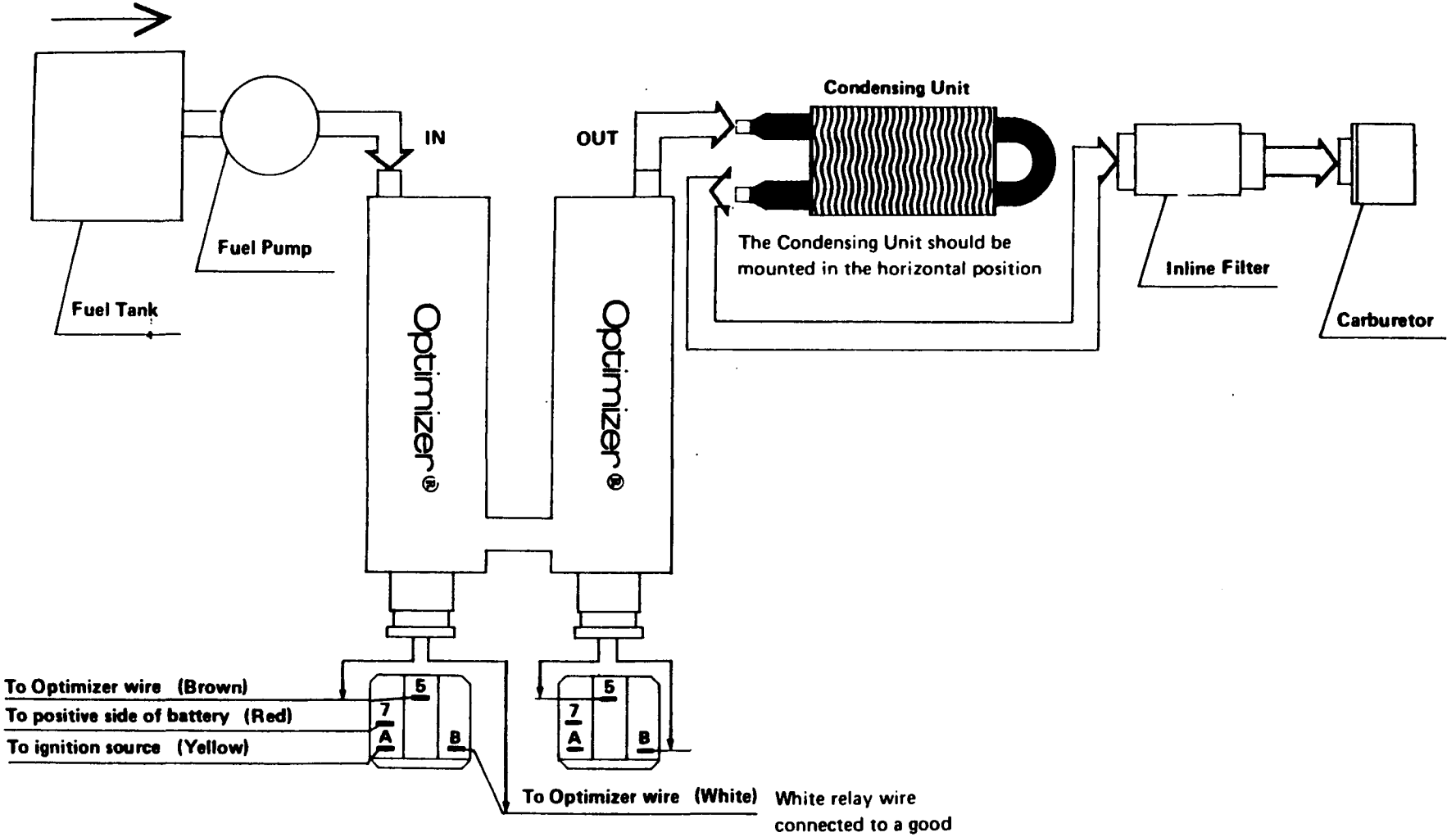


White relay wire connected to a good ground source "battery" side.

**RELAY – (Bottom Side)**

*Note:* This is a double unit; it requires two relays.

GASOLINE

▬ — BENCH EXPERIMENT .. 25 g Pt. - FLOW RATE ~ 1 l/h

O - VEHICLE - V8

△ - VEHICLE - V6

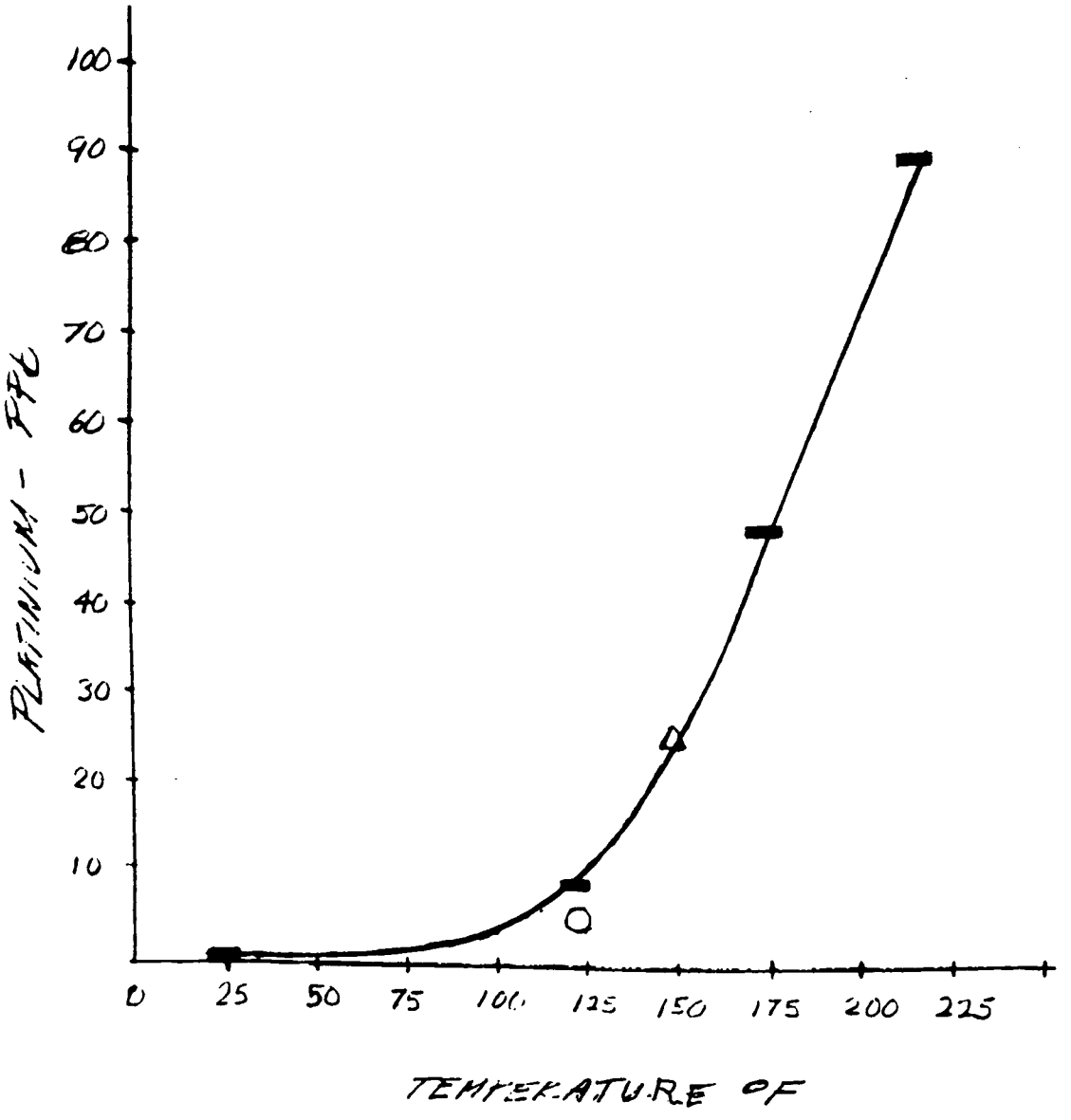

Optimizer® Ltd

Explanation of Fuel Sample Tests from Research and Control Laboratories

A-2: Sample removed from fuel tank at gas station. (480 cc sample)

B-2: Sample after exiting Optimizer with no heat. (480 cc sample)

C-2: Sample exiting Optimizer with heat. (480 cc sample) The hydro carbon composition done at the same time showing increase in aromatics and a decrese in saturates was done on this sample.

A-3: Sample removed from fuel tank. (3840 cc sample)

B-3: Sample exiting Optimizer with heat. (3840 cc sample)

It must be noted that there was no pump sample taken at the time of A-3 and B-3.

"A" Group of Tests: Summer Fuel

"B" Group of Tests: Winter Fuel

Note: A direct flow rate of 3840 cc in 15 minutes is faster than any automobile uses fuel and does not allow sufficient time for treatment within the Optimizer.

ATTACHMENT C-3

# Research and Control Laboratories, Inc.

27145 BENNETT ST.
(313) 538-2367 DETROIT, MICH. 48240

Dec. 6, 1982

Dr. Marvin Weintraub
Innovative Technologies, Inc.
Southfield, Michigan

Re: Optimizer

Dear Sir:

The analytical results obtained on the samples you submitted are listed below. Platinum was determined by flameless atomic absorption and the gasoline characterization was done by the standard ASTM method.

| | Samples | | | | |
|---|---|---|---|---|---|
| | A-2 | B-2 | C-2 | A-3 | B-3 |
| Pt, ppb | 0.0 | 6.5 | 29.3 | 0.0 | 23,0 |
| Aromatic % | 26.0% | 28.9 | 31.4 | 26.9 | 26.7 |
| Olefin % | 10.2 | 9.4 | 9.7 | 9.7 | 9.0 |
| Saturates % | 63.8 | 61.7 | 58.7 | 63.4 | 64.3 |

J. T. Runyan

## TEST SUMMARY & RESULTS

| 1980 CHEVROLET MONTE CARLO V-8, VEHICLE # 7957 | | | | | | | | |
|---|---|---|---|---|---|---|---|---|
| DATE | ODO | TEST | DESCRIPTION | HC | CO | NOx | MPG | FLUIDYNE |
| 8/19/82 | 54490 | City | Baseline | .206 | .922 | .897 | 17.15 | - |
| 8/19/82 | 54498 | Hwy | Baseline | .063 | .189 | 1.057 | 22.61 | - |
| 8/19/82 | 54519 | City | Baseline | .167 | .725 | .872 | 17.45 | - |
| 8/19/82 | 54526 | Hwy | Baseline | .064 | .133 | 1.025 | 22.76 | - |
| 9/02/82 | 55691 | City | Device * | .361 | .344 | 1.123 | 17.81 | 17.80 |
| 9/02/82 | 55699 | Hwy | After | .114 | .011 | 1.348 | 23.39 | 23.79 |
| 9/02/82 | 55724 | City | 500 | .389 | .206 | 1.082 | 17.85 | 17.66 |
| 9/02/82 | 55744 | Hwy | Miles | .111 | .017 | 1.305 | 23.82 | 24.06 |
| 9/02/82 | 55783 | City | Parameter | .432 | 1.406 | 1.394 | 18.75 | 18.62 |
| 9/02/82 | 55790 | Hwy | Only | .121 | .059 | 1.763 | 24.60 | 25.02 |
| 9/02/82 | 55811 | City | | .406 | .487 | 1.457 | 19.25 | 18.89 |
| 9/02/82 | 55819 | Hwy | | .115 | .121 | 1.895 | 24.54 | 24.99 |
| 9/08/82 | 56372 | City | Parameter | .283 | .107 | 1.270 | 19.03 | 19.61 |
| 9/08/82 | 56380 | Hwy | After | .115 | .024 | 1.476 | 24.83 | 25.11 |
| 9/08/82 | 56400 | City | 500 | .264 | .484 | 1.329 | 19.17 | 19.27 |
| 9/08/82 | 56408 | Hwy | Miles | .113 | .071 | 1.495 | 24.92 | 25.17 |
| 9/10/82 | 56957 | City | Final | .228 | .667 | .893 | 17.55 | 18.04 |
| 9/10/82 | 56965 | Hwy | Baseline | .075 | .168 | 1.125 | 22.87 | 23.44 |
| 9/10/82 | 56993 | City | " | .255 | .922 | .910 | 17.80 | 18.03 |
| 9/10/82 | 56998 | Hwy | " | .074 | .176 | 1.084 | 23.10 | 23.48 |

* Vehicle No. 7957 was tested with a fuel return line to the tank. The timing was adjusted as prescribed in the device installation instructions.

TEST SUMMARY & RESULTS - continued

| 1981 OLDSMOBILE CUTLASS V-6, VEHICLE # 8982 | | | | | | | | |
|---|---|---|---|---|---|---|---|---|
| DATE | ODO | TEST | DESCRIPTION | HC | CO | NOx | MPG | FLUIDYNE |
| 8/19/82 | 63952 | City | Baseline | .172 | .457 | 2.627 | 20.53 | - |
| 8/19/82 | 63960 | Hwy | Baseline | .074 | .180 | 1.427 | 26.55 | - |
| 8/19/82 | 63981 | City | Baseline | .174 | .764 | 2.743 | 20.56 | - |
| 8/19/82 | 63989 | Hwy | Baseline | .074 | .273 | 1.477 | 25.85 | - |
| 8/25/82 | 64528 | City | Device * | .243 | .469 | 3.519 | 20.54 | - |
| 8/25/82 | 64535 | Hwy | After | .098 | .162 | 2.189 | 26.18 | - |
| 8/25/82 | 64555 | City | 500 | .225 | .879 | 3.366 | 20.26 | - |
| 8/25/82 | 64563 | Hwy | Miles | .095 | .136 | 2.184 | 26.07 | - |
| 9/02/82 | 64605 | City | Parameter | .214 | .508 | 3.175 | 20.72 | 20.60 |
| 9/02/82 | 64613 | Hwy | Only | .090 | .187 | 2.130 | 25.95 | 26.42 |
| 9/02/82 | 64633 | City | | .198 | .626 | 3.216 | 21.15 | 20.93 |
| 9/02/82 | 64641 | Hwy | | .088 | .218 | 2.150 | 26.13 | 26.28 |
| 9/07/82 | 65187 | City | Parameter | .231 | .630 | 3.061 | 20.73 | 20.80 |
| 9/07/82 | 65195 | Hwy | Plus | .090 | .115 | 2.252 | 26.35 | 26.58 |
| 9/07/82 | 65215 | City | 500 | .235 | .623 | 3.121 | 20.74 | 20.88 |
| 9/07/82 | 65223 | Hwy | Miles | .086 | .238 | 2.103 | 26.29 | 26.45 |
| 9/15/82 | 66010 | City | Final | .200 | .352 | 2.597 | 20.48 | 20.77 |
| 9/15/82 | 66018 | Hwy | Baseline | .082 | .121 | 1.703 | 26.36 | 26.79 |
| 9/15/82 | 66038 | City | " | .215 | .753 | 2.433 | 20.34 | 20.80 |
| 9/15/82 | 66046 | Hwy | " | .080 | .301 | 1.556 | 26.05 | 26.53 |

*Vehicle No. 8982 was tested with a fuel return line to the tank. The timing was adjusted as prescribed in the device installation instructions.

# EVALUATION OF OPTIMIZER DEVICE

## VEHICLE NO. 0267

### 1980 CHEVROLET MONTE CARLO 4.4L V-8

| DATE | ODO | TEST | DESCRIPTION | HC | CO | NOX | MPG |
|---|---|---|---|---|---|---|---|
| 11-08-82 | 43049 | CITY | BASELINE | 0.071 | 0.163 | 0.649 | 17.38 |
| 11-08-82 | 43058 | HWY | AFTER | 0.024 | 0.037 | 0.853 | 21.73 |
| 11-08-82 | 43077 | CITY | 1000 MILES | 0.073 | 0.279 | 0.678 | 17.42 |
| 11-08-82 | 43084 | HWY | FACT. SPECS | 0.019 | 0.052 | 0.910 | 22.08 |
| | | | AVERAGE CITY RESULTS: | 0.072 | 0.221 | 0.664 | 17.40 |
| | | | AVERAGE HWY RESULTS: | 0.022 | 0.045 | 0.882 | 21.91 |
| 11-11-82 | 44132 | CITY | OPTIMIZER | 0.082 | 0.235 | 0.753 | 17.84 |
| 11-11-82 | 44140 | HWY | AFTER | 0.022 | 0.007 | 1.009 | 22.77 |
| 11-15-82 | 44207 | CITY | 1000 MILES | 0.078 | 0.260 | 0.708 | 17.75 |
| 11-11-82 | 44167 | HWY | FACT. SPECS | 0.023 | 0.182 | 1.038 | 23.03 |
| | | | AVERAGE CITY RESULTS: | 0.080 | 0.248 | 0.731 | 17.80 |
| NOTES 1, 2 | | | AVERAGE HWY RESULTS: | 0.023 | 0.095 | 1.024 | 22.90 |
| 11-15-82 | 44243 | CITY | OPTIMIZER | 0.090 | 0.066 | 0.843 | 17.85 |
| 11-15-82 | 44250 | HWY | PARAMETERS | 0.027 | 0.000 | 0.890 | 23.22 |
| 11-15-82 | 44270 | CITY | ADJUSTED | 0.092 | 0.364 | 0.877 | 18.15 |
| 11-15-82 | 44278 | HWY | (NO MILES) | 0.027 | 0.002 | 0.921 | 23.33 |
| | | | AVERAGE CITY RESULTS: | 0.091 | 0.215 | 0.860 | 18.00 |
| NOTES 1, 3 | | | AVERAGE HWY RESULTS: | 0.027 | 0.001 | 0.906 | 23.28 |
| 11-16-82 | 44324 | CITY | OPTIMIZER | 0.193 | 0.091 | 1.553 | 16.37 |
| 11-16-82 | 44331 | HWY | BACK TO | 0.058 | 0.016 | 1.438 | 20.56 |
| 11-16-82 | 44352 | CITY | FACT. SPECS | 0.208 | 0.492 | 1.577 | 16.70 |
| 11-16-82 | 44359 | HWY | (NO MILES) | 0.080 | 0.072 | 1.737 | 21.61 |
| | | | AVERAGE CITY RESULTS: | 0.201 | 0.292 | 1.565 | 16.54 |
| NOTES 1, 2 | | | AVERAGE HWY RESULTS: | 0.069 | 0.044 | 1.588 | 21.09 |

The final set of tests, Optimizer back to factory specs (no miles), is included here for information purposes only. It was found that one, possibly two, spark plug wires failed on this vehicle during the final set of tests. This explains the extreme variance from the other set of tests where Optimizer was operated at factory specs.

Note 1. Vehicle No. 0267 was tested without a fuel return line according to the then current installation configuration.

Note 2. Vehicle was tested without the timing advance prescribed in the installation instructions.

Note 3. Vehicle was tested with the timing advance as prescribed in the installation instructions.

# EVALUATION OF OPTIMIZER DEVICE

ATTACHMENT C-7

## VEHICLE NO. 2430

### 1980 OLDSMOBILE CUTLASS 4.3L V-8

| DATE | ODO | TEST | DESCRIPTION | HC | CO | NOX | MPG |
|---|---|---|---|---|---|---|---|
| 11-09-82 | 39683 | CITY | BASELINE | 0.108 | 0.044 | 1.348 | 19.27 |
| 11-09-82 | 39690 | HWY | AFTER | 0.055 | 0.006 | 1.521 | 24.34 |
| 11-09-82 | 39711 | CITY | 1000 MILES | 0.107 | 0.034 | 1.364 | 19.16 |
| 11-09-82 | 39719 | HWY | FACT. SPECS | 0.063 | 0.063 | 1.557 | 24.45 |
| | | | AVERAGE CITY RESULTS: | 0.108 | 0.039 | 1.356 | 19.22 |
| | | | AVERAGE HWY RESULTS: | 0.059 | 0.035 | 1.539 | 24.40 |
| 11-11-82 | 40755 | CITY | OPTIMIZER | 0.134 | 0.023 | 1.427 | 19.41 |
| 11-11-82 | 40763 | HWY | AFTER | 0.037 | 0.001 | 1.740 | 25.34 |
| 11-11-82 | 40783 | CITY | 1000 MILES | 0.119 | 0.184 | 1.488 | 19.06 |
| 11-11-82 | 40790 | HWY | FACT. SPECS | 0.037 | 0.001 | 2.046 | 25.92 |
| | | | AVERAGE CITY RESULTS: | 0.127 | 0.104 | 1.458 | 19.24 |
| NOTES 1, 2 | | | AVERAGE HWY RESULTS: | 0.037 | 0.001 | 1.893 | 25.63 |
| 11-15-82 | 40837 | CITY | OPTIMIZER | 0.102 | 0.018 | 1.549 | 20.19 |
| 11-15-82 | 40845 | HWY | PARAMETERS | 0.034 | 0.000 | 2.333 | 25.58 |
| 11-15-82 | 40865 | CITY | ADJUSTED | 0.116 | 0.088 | 1.714 | 20.03 |
| 11-15-82 | 40872 | HWY | (NO MILES) | 0.034 | 0.000 | 2.353 | 25.77 |
| | | | AVERAGE CITY RESULTS: | 0.109 | 0.053 | 1.632 | 20.11 |
| NOTES 1, 3 | | | AVERAGE HWY RESULTS: | 0.034 | 0.000 | 2.343 | 25.68 |
| 11-16-82 | 40925 | CITY | OPTIMIZER | 0.115 | 0.047 | 1.345 | 19.28 |
| 11-16-82 | 40932 | HWY | BACK TO | 0.036 | 0.001 | 1.861 | 25.48 |
| 11-16-82 | 40953 | CITY | FACT. SPECS | 0.107 | 0.099 | 1.444 | 19.13 |
| 11-16-82 | 40961 | HWY | (NO MILES) | 0.037 | 0.000 | 1.906 | 25.83 |
| | | | AVERAGE CITY RESULTS: | 0.111 | 0.073 | 1.395 | 19.21 |
| NOTES 1, 2 | | | AVERAGE HWY RESULTS: | 0.037 | 0.001 | 1.884 | 25.66 |

Note 1. Vehicle No. 2430 was tested without a fuel return line according to the then current installation configuration.

Note 2. Vehicle was tested without the timing advance prescribed in the installation instructions.

Note 3. Vehicle was tested with the timing advance as prescribed in the installation instructions.

ATTACHMENT C-8

Those vehicles with the three items of the return line system installed during the test are designated by a red check ( ✓ ) mark.

Optimizer® Ltd

**Device:** Optimizer G-500 (Patent Pending)

**Conditions:** Highway, at 55 MPH.

| Vehicle | Miles Driven | MPG-Base | MPG-Device | Improvement % |
|---|---|---|---|---|
| '80 Olds Cutlas | 969.5 | 24.70 | 29.83 | 18 % |
| '77 Buick LaSabre | 780.0 | 21.99 | 24.55 | 11 % |
| '76 Buick LaSabre | 2,409.0 | 20.46 | 23.48 | 13 % |
| '82 GMC Suburban | 2,409.0 | 14.57 | 17.46 | 17 % |
| ✓ '81 Pontiac | 381.0 | 27.79 | 30.27 | 8 % |
| ✓ '76 Pontiac | 381.0 | 17.10 | 19.20 | 11 % |
| ✓ '82 GMC Pick Up Truck | 381.0 | 13.60 | 14.80 | 8.8 % |
| ✓ '76 Chevrolet PU Truck | 381.0 | 19.60 | 22.00 | 11 % |
| ✓ '78 Chevy Station Wagon | 381.0 | 22.40 | 27.40 | 19 % |
| '76 Cadillac | 500.0 | 16.50 | 18.87 | 12.5 % |
| ✓ '81 Chevrolet Citation | 700.0 | 26.60 | 31.03 | 14.2 % |
| Titan Motor Home | 296.0 | 7.50 | 8.30 | 10 % |
| Winnebago Motor Home | 296.0 | 8.50 | 10.40 | 18 % |
| | | | | **AVERAGE %:** 14 % |

Optimizer Center, 220 Lynn Street, Flushing, Michigan 48433 313 659-2000

UNITED STATES ENVIRONMENTAL PROTECTION AGENCY
ANN ARBOR, MICHIGAN 48105

ATTACHMENT D

May 4, 1982

OFFICE OF
AIR, NOISE AND RADIATION

Ms Vera Anderson
Optimizer Company
220 Lynn Street
Flushing, MI 48433

Dear Ms. Anderson

This letter is in response to your inquiry on May 3, 1982, regarding an EPA evaluation of the Optimizer. The Environmental Protection Agency is charged by Congressional mandate to evaluate fuel economy and emission control devices. While the EPA does not actually "approve" such devices, it does conduct evaluations for the purpose of increasing the common knowledge in the area. For this reason, the outcome of any testing by EPA becomes public information. It is this information which may be cited, although no claims can be made that any EPA findings constitute "approval" of the device or system.

Enclosed with this letter is a packet of materials which you will need to apply for an EPA evaluation of your device. This packet consists of 1) an application format, 2) a document entitled "EPA Retrofit and Emission Control Device Evaluation Test Policy", 3) "Basic Test Plans and Testing Sequences", and 4) a copy of the applicable Federal Regulations. Engine oils, oil additives, and other lubricants do not fall under the provisions of Section 511 of the Motor Vehicle Information and Cost Savings Act. Recently, there has been confusion over the wording in the regulation that gives EPA the authority to evaluate fuel additives. Until we are able to eliminate this confusion by modifying the regulation, we cannot accept applications for evaluations of fuel additives. If you wish to improve the credibility of your oil or fuel additives by performing tests on your own, we will try to help by commenting on your test plans.

In order for the EPA to conduct an evaluation of your device, we must have an application. Once you have reviewed all the documents in the packet, you should prepare an application in accordance with the guidelines of the application format. A critical part of the application is the substantiating test data. The required test results will have to be obtained at a laboratory of your choice. Such testing would be conducted at your expense. A list of laboratories, which are known to have the equipment and personnel to perform acceptable tests, has been included in the enclosed packet. The laboratory list is revised periodically, so be certain that the list you are using is current. Please allow EPA to comment on your test plan before beginning testing at an independent laboratory. If you desire, we can assist in the development of a satisfactory test plan.

There are, however, several aspects concerning testing at an outside laboratory which I would like to bring to your attention at this time:

Minimum Test Requirements - Although different types of devices may require a more complex test plan, the minimum we require involves two vehicles and two test sequences run in duplicate. The vehicles should be selected from those listed in Table 1; if possible. Each vehicle is to be set to manufacturer's tune-up specifications for the baseline tests.

The tests are conducted in a "back-to-back" manner, once with the vehicle in baseline condition, and again with the device installed with no vehicle adjustments between tests. If installation of the device also involves some adjustments, e.g. timing, fuel-air mixture, choke or idle speed, another test sequence with only these adjustments should be inserted between the first and last. If mileage accumulation is necessary in order to realize the full benefit, the same number of miles that are accumulated before the test runs must also be accumulated before baseline runs. In addition, the method of mileage accumulation should be kept constant. Also, as a minimum, the test sequence shall consist of a hot-start LA-4 portion (bags 1 and 2) of the Federal Test Procedure (FTP) and a Highway Fuel Economy Test (HFET). The details of these tests are contained in the enclosed packet. Although only a hot-start FTP is required to minimize the costs to you, you are encouraged to have the entire cold-start test performed, since any confirmatory testing and evaluation performed by EPA will be based on the complete FTP, and you may wish to know how a vehicle with your device performs over this official test. As a final requirement, the personnel of the outside laboratory you select should perform every element of your test plan. This includes preparation of the test vehicle, adjustment of parameters, and installation of the device.

Submission of Data - We require that all test data obtained from the outside laboratories in support of your application be submitted to us. This includes any results you have which were declared void or invalid by the laboratory. We also ask that you notify us of the laboratory you have chosen, when testing is scheduled to begin, what tests you have decided to conduct, allow us to maintain contact with the laboratory during the course of the testing, and allow the test laboratory to directly answer any questions at any time about the test program.

Cost of the Testing - The cost of the minimum test plan (two vehicles, two test sequences in duplicate) described above should be less than $3000 per vehicle and less than $6000 for the total test at any of the laboratories on the list. It should be recognized that additions to the minimum test plan (such as mileage accumulation, parameter adjustment, or additional testing) will result in additional costs. In any case, you will have to contact them individually to obtain their latest prices.

Outcome of the Tests - In order for EPA to best utilize our facilities, confirmatory testing will be performed only on those devices that demonstrate a statistically significant improvement in fuel economy or emissions based on data from an EPA-recognized independent laboratory. We have established some guidelines which will help you determine whether the test results with your device should be considered encouraging. These values have been chosen to assure both of us that a real difference in fuel economy exists, and that we are not seeing only the variability in the results. The table below presents the minimum number of cars that need to be tested for varying degrees of fuel economy improvement, assuming a typical amount of variability in fuel economy measurement. For a minimum test plan which was conducted on a fleet of two cars, the average improvement should be at least 6%. If at least a 6% difference in average fuel economy can be shown, then we would be able to say statistically at the 80% confidence level that there is a real improvement.

Similarly, we would expect a minimum of 3% improvement for a fleet of 5 vehicles. Test results which display a significant increase in emission levels should be reason for concern.

Minimum Fuel Economy Improvements versus Size of Test Fleet

| Fleet Size | Average Improvement Required |
|---|---|
| 2 | 6% |
| 3 | 5% |
| 4 | 4% |
| 5 | 3% |
| 10 | 2% |

Once we receive your application, it will be reviewed to determine if it meets the requirements listed in the format. Please do not submit confidential, trade secret, or proprietary information as EPA cannot assure that such information can be protected in all situations. If your application is not complete, we will ask you to submit further information or data. After any missing information has been submitted, your application will be reconsidered, and once it meets our requirements, you will be advised of our decision whether or not EPA will perform any confirmatory testing. You must provide funds to cover the cost of any testing in the EPA laboratory. You will be given the opportunity to concur with our test plan. Once this testing is complete, an evaluation report will be written. If no further testing is required, the report will be written solely on the basis of the test data submitted and our engineering analysis.

EPA intends to process your application in as expeditious a manner as possible. We have established a goal of twelve weeks from the receipt of a complete application to the announcement of our report. The attainment of this objective requires very precise scheduling, and we are depending on the applicant to respond promptly to any questions, or to submit any requested data. Failure to respond in a timely manner will unduly delay the process. In the extreme case, we may consider lack of response as a withdrawal of the application.

I hope the information above and that contained in the enclosed documents will aid you in the preparation of an acceptable application for an EPA evaluation of your device. I will be your contact with EPA during this process and any subsequent EPA evaluation. My address is EPA, Motor Vehicle Emission Laboratory, 2565 Plymouth Road, Ann Arbor, Michigan, 48105. The telephone number is (313) 668-4299. Please contact me if you have any questions or require any further information.

Sincerely,

Merrill W. Korth

Merrill W. Korth
Device Evaluation Coordinator
Emission Control Technology Division

Enclosures

UNITED STATES ENVIRONMENTAL PROTECTION AGENCY ATTACHMENT E
ANN ARBOR, MICHIGAN 48105

July 20, 1982

OFFICE OF
AIR, NOISE AND RADIATION

Dr. Leon Rosky
Optimizer Ltd.
Optimizer Center
220 Lynn Street
Flushing, MI 48433

Dear Dr. Rosky:

After our meeting on July 19 and our telephone conversation later that day, I suggested that you evaluate the Optimizer device by following EPA recommended test plan D-1. This would eliminate one of the 500 mile accumulation increments that you listed in your preliminary test plan that we discussed during our meeting. As a result, the recommended plan may be itemized as follows:

1. Obtain and prepare vehicles
2. 500 mile accumulation period
3. Baseline testing sequences (city and highway test)
4. Install device and perform the following vehicle parameter changes.
   a. Advance timing five degrees
   b. Install return line as per instructions
   c. Adjust fuel line pressure to the carburetor to 3.5 to 4 p.s.i. at idle.
5. 500 mile accumulation period
6. Test sequence (city and highway) test
7. Remove device
8. Test sequence (city and highway) without device leaving vehicle parameters at same conditions as in Item 6 test sequence. (If vehicle does not perform properly during this sequence due to low fuel pressure, shut off the Optimizer return line restoring fuel pressure to normal levels and perform test with timing advance only.)

Sincerely,

Merrill W. Korth
Device Evaluation Coordinator
Test and Evaluation Branch

Enclosure

Optimizer® Ltd

December 6, 1982

Environmental Protection Agency
Motor Vehicle Emission Laboratory
2565 Plymouth Road
Ann Arbor, Michigan 48105

Attention: Mr. Merrill W. Korth
Device Evaluation Coordinator
Emission Control Technology Division

Dear Mr. Korth:

Enclosed you will find our application for evaluation of the Optimizer under section 511 of the Motor Vehicle Information and Cost Savings Act. Included are test reports from laboratories relative to composition of the fuel, both before and after the device.

I believe some comments are necessary at this point in order to clarify the test results and some questions that may come up relative to the test programs. You will note that two test programs have been done. The first program was done according to the agreed upon test procedure as stated in your letter dated July 20, 1982. On that test you will note the following: one vehicle, the Oldsmobile, gave no results at all; car number two, the Monte Carlo, showed results both on the urban and highway cycles. You will note that the sequences wherein the device was removed (parameters only, without an accummulation of 500 miles), improvement was seen over device plus parameters. The sequence immediately following this, where 500 miles were accummulated (with no device, only parameters), gave a further increase, which may lead one to believe the device had no effect. However, in all of our testing, both that which was done at Optimizer, Ltd and also at Automotive Testing Laboratories, Inc, we saw that the Optimizer required an accummulation of miles both for "heating" and "wearing-off" effects within the combustion chamber. Until recently, we were not sure how many miles had to be accummulated for the break-in and the wearing-off periods. Consequently, it is apparent to us that the increase in miles per gallon figures without device (both with and without accummulation of miles) is due to deposits of noble metals on the walls of the combustion

chamber from fuel previously treated within the Optimizer. These results are consistent with all the tests that we have done up to this point.

In the second program, we were concerned about knowing exactly what the device alone would do on two other vehicles. It was set up for a base line test after an accummulation of 1,000 miles, and a device only test after an accummulation of 1,000 miles. The results are appended. After the device only test, we did an immediate timing advance of 5 degrees, followed by timing back to specs with device. The results show the effect of the timing. We found that the vehicles ran more efficiently with the timing advanced and were better able to utilize the chemically treated fuel. After thousands of miles of road testing, we found no detrimental effects to valves and no detonation problems on vehicles that had Optimizers and advanced timing. In addition, there did not seem to be any increase in exhaust emissions due to the timing advance.

You will note on the fuel analysis reports that platinum is found in the fuel exiting from the Optimizer, and that in the F.I.A. test there is a suggestion also of what might be a hydro-cracking effect due to the increase in aromatics.

We have observed some problems with the use of a return line which was previously a part of the Optimizer system. Therefore, we have stopped using the return lines and have found the results improved. Also added as a parameter during all the testing (both programs) is a condensing unit which cools the fuel prior to entering into the carburetor. You will note the placement of the unit on the drawing of the installation procedure. Because of the emission findings in these tests, which are well within EPA guidelines, I do hope that when EPA tests this device, vehicles without a catalytic converter will also be used.

Test results verify that the "Optimizer System" does work and is a marketable item. I must stress that much time and effort has been put into this project, not to speak of the cost factor. This company will only market a device that does work. We are at that stage presently, and are looking to market this to fleets in both gasoline and diesel. While we have not had independent testing done on the diesel, our own tests appear to be even better than on the gasoline engine. It should be noted that platinum is also found in the diesel fuel treated by the Optimizer. We are now considering a diesel testing program at an independent laboratory to verify our results.

Hoping to hear from you soon and looking forward to discussing the EPA testing of our product, I remain

Sincerely yours,

Dr. Leon I. Rosky
President

LIR:va

Enclosures

UNITED STATES ENVIRONMENTAL PROTECTION AGENCY
ANN ARBOR, MICHIGAN 48105

ATTACHMENT G

December 28, 1982

OFFICE OF
AIR, NOISE AND RADIATION

Dr. Leon I. Rosky, President
Optimizer, Ltd.
220 Lynn Street
Flushing, MI 48433

Dear Dr. Rosky:

We received your letter of December 6 in which you applied for an EPA evaluation of the Optimizer device as an emission and fuel economy retrofit device.

Our Engineering Evaluation Group has made a preliminary review of your application and has determined that there are several items that require clarification or additional information prior to further processing of your application. Our comments below address these items.

1. Section 2a - Marketing Identification. Six models of the Optimizer are identified - two for light-duty vehicles and four for heavy-duty vehicles. Our program for the evaluation of emission and fuel economy devices does not include heavy-duty vehicles. We will therefore assume that the application does not apply to the 1200G, 2150G, 2200D, and 4200D model and that the information and data supplied for these models was for background information purposes only. Devices for heavy-duty vehicles are evaluated by DOT. The person to contact is:

   Sam Powell, Chief
   Heavy Duty Research Division
   DOT - NHTSA
   400 7th Street
   Washington, DC 20590
   (202) 426-2957

2. Section 2a. - Marketing Identification. Are the optimizer models 1150G and 1200D presently manufactured and sold or are they prototypes?

3. Section 3c. - Construction and Operation. Your application described several variations in the construction of the device and the components used. For the models 1150G and 1200D:

   a. What is the catalyst material?

   b. Does the Optimizer have a temperature sensor or limit switch to prevent overheating. If so, what are the off/on set points?

c. What are the dimensions of the units?

d. What is the delay time of the relay?

e. These devices do not appear to incorporate a check valve, pressure regulator, or fuel bypass line. Is this correct?

4. Section 3d. - Specific Claims.

a. From the information provided, it appears that you claim that some benefits are achieved immediately with full benefits achieved at 1000 miles. Is this correct?

b. To maintain the benefits attributable to the device, it must remain in active use. The benefits will cease after 1000 to 2000 miles without the device. Is this correct?

c. You claim a minimum improvement in fuel economy of 5%.

d. What is the "... increase in performance of the vehicle."? How is it measured?

5. Section 4b. - Installation.

a. Are the relay and condensor included with the device?

b. Are all necessary hoses, fittings, and wiring included with the device?

c. Several versions of the instructions were provided with the application. We assume the only applicable instructions were those labeled "Installation Instructions - Model #1150G and Model #1200D. Is this correct?

d. These instructions require advancing the timing 5 degrees or until knock is heard. Under what conditions - idle or at road load?

e. For those vehicles whose timing is advanced less than 5 degrees due to knock, do you expect to be able to advance the timing the full 5 degrees after 1000 miles? Do you recommend attempting to advance timing to the full 5 degrees after 1,000 miles?

6. Section 4c. - Operation. Do you anticipate any problems if the vehicle is not running but the ignition key is left in the on position?

7. Section 4e. - Maintenance. Since the active catalyst material is to be leached out of the substrate by the heated fuel, how long is it before the device is ineffective (miles and gallons of fuel)?

8. Section 5b. - Regulated Emissions and Fuel Economy.

   a. Which model was tested by ATL in August and September? It appears to have been a G-500 which incorporated a pressure relief valve and flow return line.

   b. Which model was tested by ATL in November?

   c. Do you claim that these test results are representative of the results to be expected from the model 1150G Optimizer?

   d. How was the mileage accumulation conducted for these tests?

   e. Why do you expect ambient conditions (other than temperature) or driving habits to alter the benefits of the device? In what manner are the benefits changed?

   f. You state that "... I do hope that when EPA tests this device, vehicles without a catalytic converter will also be used". I assume by this you mean vehicles on which the manufacturer did not install a catalyst. Is this correct? Why non-catalyst vehicles?

   g. You state that the benefits of the device on a 4 cylinder vehicle may be less. Typically how much less?

   h. You gave the results of the road testing conducted by Optimizer Ltd. on the model 1500G. For these tests:

      (1) What was the difference between this model and the 1150G?

      (2) What were the number of miles driven, both baseline and with device for each vehicle?

      (3) Briefly describe the test route, fuel measurement methods and techniques for quality control.

The application covers both gasoline and diesel engines. Because these fuels are different and the device acts on the fuel, it will be necessary also test the model 1200D. We are prepared to work with you in developing a test plan. We may be able to devise a simplified test plan for the diesel model after the preceding questions on the gasoline model are answered.

We will be able to perform a detailed review of your application after you have responded to the preceding items. In order that we may efficiently process your application, I request that you respond to this letter by January 21, 1983. If I can be of any additional assistance, please contact me at (313) 668-4299

Sincerely,

Merrill W. Korth
Device Evaluation Coordinator
Test and Evaluation Branch

Rec'd 1-19-83
mwa



ATTACHMENT H

Optimizer® Ltd

January 18, 1983

Mr. Merrill W. Korth
Device Evaluation Coordinator
Test and Evaluation Branch
Environmental Protection Agency
2565 Plymouth Road
Ann Arbor, Michigan 48105

Dear Mr. Korth:

Enclosed you will find our answers to the questions which you submitted on December 28, 1982. We hope that they are clear and make a thorough review of our application possible.

Item 1. As to the model numbers of the Optimizer referred to in this question, the 2150G, 2200D and 4200D models are to be used on heavy duty vehicles. This application, according to what you are saying would not then apply to the above models, but would definitely apply to the 1150G, 1200G and 1200D. Thank you very much for the reference to Mr. Sam Powell, Chief, Heavy Duty Research Division of DOT - NHTSA.

Item 2. The Optimizer model 1150G, 1200G and 1200D are presently manufactured for sale and are not prototype units. The units tested by Automotive Testing Laboratories, Inc. were prototype units in that the exterior design of the unit is different than that which is presently being manufactured. The interior contents of the Optimizer, both those tested at Automotive Testing Laboratories and those now being manufactured, are similar, but certain refinements were made to improve the heating capabilities in colder weather. It should be noted that the identification of the original prototype model evolved from G-500 to 1500G to the present designation of 1150G. (Reference to any of these designations indicates one model only, the 1150G).

Optimizer Center, 220 Lynn Street, Flushing, Michigan 48433 313 659-2000

Item 3.

A. Catalyst used is a substrate of alumina oxide impregnated with platinum metal.

B. The temperature is controlled by a cartridge heater using a Belco resistance wire. The "on" point is 150 degrees and the "off" point is 170 degrees. There is no overheating seen due to the condenser, which cools the fuel prior to entering the carburetor.

C. See drawing below.

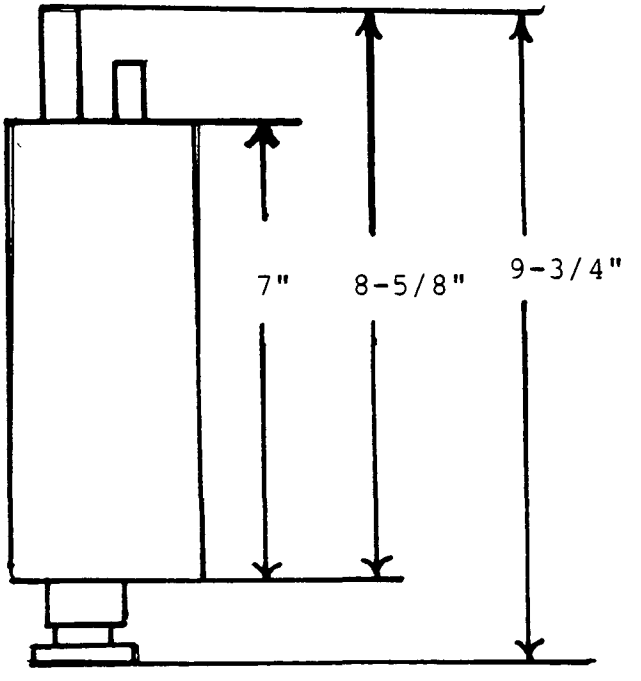


Circumference: 7-15/16"

Item 3. (Con't):

D. The relay we are presently using can be used in a system that draws up to appcoximately 20 amps of current, and will cease to function if more than that power is called for. The delay is part of the relay and works in conjuntion with the power source of the car. As you will note on the wiring diagram, the relay is connected to the ignition side of the fuse box, thereby giving no power to the relay until after full ignition.

E. You will note that there were two separate tests done at Automotive Testing Laboratories. The first test incorporated a pressure regulator, check valve and fuel by-pass line. The second test had none of these three items. We found that we could maintain better heat (which is crucial to the working of the Optimizer) and more adequately utilize the platinum effect upon the fuel within the combustion chamber by eliminating those three items. It should be emphasized that the units used in both the first and second tests were the same but, between those two tests, we changed the model numbers.

Item 4.

A. Our tests demonstrate that within the 1,000 mile accumulation there is a constant increase in the curve showing improvement in miles per gallon.

B. As noted in the application, immediately upon removing the device, the same increase in miles per gallon will still be realized on a decreasing curve until approximately 1,000 miles have been accumulated.

C. As you will note, by virtue of the tests done at Automotive Testing Laboratories, a minimum of 5% improvement was obtained. In addition, the test results on different vehicles tested by Optimizer display percentages of up to 20% improvement.

D. Optimizer has tested many units on different vehicles with varied drivers. Subjectively, improved handling of the vehicle and increased power were noted by the drivers.

Item 5.

A. Yes.

B. No.

Item 5. (Con't):

C. Please include the Installation Instructions for Model 1200G in this statement.

D. Instructions require advancing the timing a minimum of 5 degrees, or until knock is heard (within that 5 degrees advance). This timing advance is at idle condition.

E. Our experience shows that due to the chemical change of the gasoline, a 5 degree advance is possible initially. In those vehicles where knock is heard within the 5 degrees advance, it is recommended that an attempt be made to increase to the full 5 degree advance after the 1,000 mile run-in with the device.

Item 6. No problems are anticipated if the vehicle is not running but the ignition key is left in the "on" position other than the draining of the battery. This would happen whether there is or is not an Optimizer on the vehicle.

Item 7. At this point, our tests indicate the life of the catalyst to be in excess of 150,000 miles (automobiles, gasoline and diesel) and approximately 350,000 miles on gasoline and diesel heavy duty trucks.

Item 8.

A. & B. Automotive Testing Laboratories in August, September and November tested the same unit. In August and September, that unit was known as the G-500, but due to a change in stock numbering procedures, the device used in November was changed to Model 1150G. The August-September test incorporated the pressure relief valve and the fuel return line. The November test did not include these items.

C. The test results from all Optimizer units presently manufactured are seen to be higher than previously noted. This relates to a slightly different design within the Optimizer having to do with the heating mechanism, which allows for improved heat. Being that the rate of dissolution of the platinum from the substrate is directly proportional to the heat (within a specific range), we are able to see a greater improvement in miles per gallon.

Item 8. (Con't):

D. Mileage accumulation at Automotive Testing Laboratories was done on a test track using test track drivers.

E. Benefits of the device will not be changed assuming that the same driver is driving the same vehicle under both baseline and device conditions. In a situation where baseline is driven by driver A and device testing would be driven by driver B, then the results may vary in accordance with the individual driving habits of each driver. The same would be true of testing the vehicle on a relatively flat expressway for baseline and a mountainous terrain for device test.

F. This statement relates to cars that have a catalytic converter installed by the manufacturer. We feel that if all anti-pollution mechanisms on a car (for instance, catalytic converters, EGR valve, and so forther) were removed from the car and testing was done for emissions just with the Optimizer, we may see a level of emissions which falls within the EPA guidelines.

G. As you can see in the original application, the important words in this statement are "may be less". Because we have not done adequate testing on 4 cylinder vehicles, and because of the high number of miles per gallon obtained by some of these vehicles, it is not known at this point how the Optimizer will benefit this class of vehicles. Preliminary results indicate a positive response in many of these 4 cylinder vehicles within the same percentage increase range of other vehicles.

H. 1) It should again be noted that the Optimizer models G-500, 1500G and 1150G refer to the same unit, now known solely by the designation of 1150G. Due to the design of the G-500 (also known as the 1500G) unit, it is considered a prototype as opposed to the 1150G, which is a production model.

2) You will note that on the tests done at Automotive Testing Laboratories in August and September, a break-in period of 500 miles was used. This 500 mile break-in was decided on after extensive testing by Optimizer on a number of vehicles. You will further note that between September and November (after further extensive testing by Optimizer), it was seen that an accumulation of 1,000 miles was necessary. The test results related to on the application as having been done by Optimizer were on vehicles driven prior to

Item 8. (Con't):

H. 2) August of 1982. In all cases, except for the two vehicles which ran 2,400 miles each, the numbers on this sheet relate to miles driven with Optimizer attached after having approximately 250 mile accumulations on each vehicle. Two vehicles on this list which show 2,400 miles (total miles driven) break down to approximately 50% baseline and 50% with device.

3) Test route included interstate highways in Michigan (I-75 and I-69), I-75 to Florida (vehicles driven 2,400 miles), and Ohio Turnpike. It should be noted that on each vehicle, the base test and the device test were driven on the same highway between the same two points in order to control the results obtained. Furthermore, the measuring method was by tank fill-up with the same individual filling the vehicles to the same point with great care and taking sufficient time. A calibrated barrett was used on most of these tests in order to determine accurately the miles per gallon obtained. These figures were compared with the miles per gallon obtained through the tank test and the results obtained (tank test versus barrett) were very close using this comparison method. In order to further obtain quality control, a "bogey" vehicle was utilized. The bogey was a vehicle similar to that used in the test and driven closely to the test vehicle. The purpose of the bogey was to see the effect of wind, temperature, driving conditions, terrain and so forth on this vehicle so that corrections could be made in the results of the test vehicles in direct proportion to that of the bogey. The bogey vehicle similarly was tested by tank and barrett methods as described above.

Thank you very much for being so prompt in your response to our original application presented. As per our conversation on January 17, you stated that within two weeks of the time you received our reply to your questions we would hear from you regarding the further disposition of this application.

We are prepared to meet with you at any time in order to discuss this application as it relates to your assessment of the Optimizer.

Thank you very much for your assistance in this matter. We appreciate your efforts in our behalf.

Sincerely,

Dr. Leon Rosky
President

LIR:va

UNITED STATES ENVIRONMENTAL PROTECTION AGENCY ATTACHMENT I

ANN ARBOR, MICHIGAN 48105

February 7, 1983

OFFICE OF
AIR, NOISE AND RADIATION

Dr. Leon I. Rosky
Optimizer, Ltd.
220 Lynn Street
Flushing, MI 48433

Dear Dr. Rosky:

The purpose of this letter is to confirm the items discussed in our telephone conversation of January 27 and clarify several remaining issues. The items discussed and your responses are given in the enclosure.

As a result of that discussion, we feel that the following changes to the application were also implied.

1. Item 2a of the application is now to read "1200G - Gasoline Units - passenger vehicles with large engines and heavy duty trucks" instead of "1200G - Gasoline Units - Heavy Duty Trucks".

2. Since the models being evaluated are single bed catalyst, all are the single chamber design shown in Figure 2; none are the two chamber design shown in Figure 3.

3. If there is excessive current draw and the relay "ceases to function" it must be replaced. There are no fuses or circuit breakers to protect the relay.

The following questions were either unanswered or raised as a result of that conversation, and therefore still require a reply.

1. In discussing paragraph No. 2 of the enclosure, you said that there were some small differences in these units that enabled some of these models to provide more heat. Which models? How much more heat? Under what operating conditions and ambient temperatures do these differences have an effect? What is the fuel economy improvement for each of these models at these ambient conditions?

2. In discussing paragraph No. 3 of the enclosure, you stated that the catalyst loading was 250 grams of active material, of which 0.9% is platinum. What is the composition of the remaining 99.1% of the active material? Is there any inactive catalyst substrate?

3. In discussing paragraph No. 8 of the enclosure, you stated that your own experience had shown a greater improvement for the device in city driving than in highway driving. Please provide the results of these tests. Describe the driving cycle and test procedures and provide a copy of these results.

You and I further discussed the need for diesel testing. Our position is that since the device functions by enhancing the combustion process, since the combustion processes are different for diesel and gasoline engines, since the fuels are appreciably different, and since the application covered both fuel applications, substantiating test data were required for both gasoline and diesel vehicles. Further processing of the application would therefore be suspended pending diesel testing by Optimizer. In lieu of this, EPA agreed to permit Optimizer to withdraw the diesel device from the application. You thereupon requested that the application be modified by withdrawing the only diesel model, the 1200D, from the application. Therefore, we shall now consider that the application applies only to the gasoline models 1150G and 1200G. All information regarding diesel versions of the device will now be considered to have been supplied for background information purposes only.

In order that we may proceed with the processing of your application, I request that you respond to this letter by February 25. If I can be of any further assistance, please call me at (313) 668-4299.

Sincerely,

Merrill W. Korth

Merrill W. Korth
Device Evaluation Coordinator
Test and Evaluation Branch

Enclosure

The following draft of a letter to Optimizer Ltd., was discussed with Dr. Leon I. Rosky of Optimizer on January 27, 1983.

We received your letter of January 18 in which you responded to our request for additional information on the "Optimizer" device.

Our Engineering Evaluation Group has reviewed your response and has determined that there are still several items which require clarification or additional information prior to further processing of your application. Our comments below address the referenced items in your letter. Our understanding of your responses to these questions follows each item.

1. Item 1. You stated that the application "... would definitely apply to the 1150G, 1200G, and 1200D." As we stated in our letter "Our program for the evaluation of emission and fuel economy devices does not include heavy-duty vehicles. We will therefore assume that the application does not apply to the 1200G..." which was identified in your application as being a gasoline unit for heavy duty trucks. Therefore, our position still is that the application does not apply to the model 1200G.

Optimizer: The model 1200G is still to be included in the evaluation. This model is for heavy duty gasoline trucks and some cars.

2. Item 2. You stated that the 1150G, G-500, and 1500G models were essentially identical. You also inferred that the test results for any one of these models is directly applicable to the other models, except possibly in cold weather, if they are installed in a similar manner, i.e., presence or absence of check valves, flow return line, or pressure relief valve. Is this correct?

Optimizer: Yes, these were different model identifications used throughout the product development process. Also the model 1200D is the same inside the unit. The only difference in this model is the location of the fittings.

3. Item 3a. From your response it appears all models being evaluated are a single bed catalyst. Is this correct? What is the catalyst loading (amount of active material on substrate)?

Optimizer: Yes. The catalyst loading (active material) is 250 grams of platinum.

This information was subsequently corrected during a telephone call on February 4, 1983. EPA noted that there appeared to be an error since, at current prices for platinum, it was unlikely the device contained 250 grams of platinum. Optimizer corrected the previous statement. The platinum loading on the approximately 250 grams of active material is 0.9% platinum by weight.

4. Item 3d. You state that the relay "... will cease to function if more than that power [20 amps] is called for." Please explain what you mean by the terminology "cease to function".

Optimizer: Cease to function means the relay will burn out.

5. Item 3d. You stated that "the delay is part of the relay and works in conjunction with the power source of the car". Since you also stated on page 11 of the patent that "the time delay (reference number) 40 is a conventional relay switch ..." and gave no delay time, we assume that there is in fact no time delay and that the heating element is energized as soon as the ignition key returns from the start position to the run position. Is this correct?

Optimizer: Yes.

6. Item 3e. You stated that "We found that we could maintain better heat (which is crucial to the working of the Optimizer) and more adequately utilize the platinum effect upon the fuel within combustion chamber by eliminating those three items" [check valve, return line, and relief valve]. We assume therefore that you don't consider the August/September testing at ATL to be representative of the device now being evaluated since these three components were used in that test program. Is this correct?

Optimizer: Yes. The August/September tests at ATL are not representative. Optimizer feels the tests indicate a lower bound of improvement. That is, the results would have been better with the better heat employed in the November tests at ATL.

7. Item 4a. Your reply did not fully answer our question regarding the claimed effectiveness of your device. Is there an immediate benefit attributable to the device? How large is this benefit as a percentage of the full benefit? Are full benefits seen at 1000 miles?

Optimizer: Yes, there is an immediate benefit but the size of this benefit is unknown. Full benefits are seen at 1000 miles.

8. Item 4c. You stated that the ATL tests showed at least a 5% improvement in fuel economy. However, neither test program demonstrated that city fuel economy was likely to improve.

Optimizer: Yes, the ATL tests do not demonstrate that city fuel economy was likely to improve. However, Optimizer has actually found the reverse to be true. That is, the improvement in city fuel economy was greater than the improvement in highway fuel economy. The statements regarding improved handling and increased power were subjective driver comments and no attempt was made to evaluate these comments. Optimizer has no explanation as to how the device would improve handling.

9. Item 5e. Your response regarding the timing adjustments did not state that the readjustment of the timing at 1000 miles was to be incorporated in the installation instructions. However, we assume you wish to modify item number 8 of the installation instructions for the Model 1150G to incorporate this adjustment. Therefore, instruction 8 is to be modified by adding your comment from 5e. "In those vehicles where knock is heard within the 5 degrees advance, it is recommended that an attempt be made to increase the full 5 degree advance after the 1,000 mile run-in with the device."

Optimizer: Yes

10. Item 8d. Please provide a more detailed description of the mileage accumulation procedure, e.g., type of driving cycle, average speed or speeds, stop-and-go or constant speed.

Optimizer: The mileage accumulation procedure was selected by ATL to comply with EPA requirements. Optimizer thought it probably was 55 mph cruise with breaks at two hour intervals.

11. Item 8H(1). You stated that the Optimizer model 1500G used for the road tests was identical to the model 1150G. However, you did not indicate if the vehicles which were road tested did or did not have the auxiliary components installed (the check valve, flow return valve, and pressure relief valve).

Optimizer: The road test data given in application was for vehicles without the auxilary components installed.

12. Item 8H(2). Your answer was not clear. Do you mean that the 1980 Olds Cutlass accumulated about 250 break-in miles with the device and then 969.5 test miles with the device? What was the baseline distance?

Optimizer: Yes. The baseline distance was the same as the device test distance. For the 1980 Olds the baseline mileage was 969.5 miles.

13. Item 8H(3). Please describe each of the bogey vehicles and the test vehicles to which each was matched. Was the same bogey test vehicle used for both baseline and device tests? How were bogey results used to correct the baseline and device test results of the test vehicles. Also, please briefly describe the driving conditions, e.g., how the 55 mph cruise condition was maintained.

Optimizer: The bogey vehicle was the same make and year as the test vehicle. For a particular test vehicle, the same bogey vehicle was used for the baseline and device tests. The change noted for the device tests were corrected by the percentage change in fuel consumption for the bogey vehicle for the two test sequences. For the road tests, the drivers tried to maintain a 55 mph cruise. The bogey vehicle was positioned 1000 yards ahead of the test vehicle. The driver of the Optimizer test vehicle then attempted to match the driving pattern of the bogey vehicle.

As I stated before, it will be necessary for you to also test the diesel version of your device. Test Plan/Test Sequence C-1 with a 1000 mile accumulation period would seem most appropriate. However, C-4 would be equally acceptable to us and should cost less although it would not permit you to evaluate cold start emissions or fuel economy.

Testing will require at least two vehicles and possibly more. If the change in fuel economy is only 5%, with normal test-to-test variability, two vehicles may be insufficient to demonstrate a significant change. In order to minimize the potential costs, you may wish to test vehicles sequentially rather than as a group. On this basis, you could initially test two or three vehicles. If the test results are not conclusive, you could schedule another complete test sequence on additional vehicles, one at a time.

Optimizer: Optimizer had found that the diesel vehicle tests give results similar to gasoline vehicle tests. Optimizer had found good correlation between tests of the device on the two types of vehicles. Therefore they make the same claims for both the diesel and gasoline vehicles.

In response to your allusion to EPA testing of the Optimizer, further consideration of confirmatory testing at our laboratory must await completion of the application process.

We will proceed with the review of your application when we have received your response to the preceding items.

file "OPTIMIZER" 74

ATTACHMENT J

Optimizer® Ltd

February 8, 1983

Mr. Merrill W. Korth
Environmental Protection Agency
2565 Plymouth Road
Ann Arbor, Michigan 48105

Dear Mr. Korth:

Enclosed are the following:

1. Article from "New Scientist" magazine.

2. Article from "Platinum Metals Review".

3. Graph of temperature and platinum breakoff in gasoline. The breakoff at the same temperature always falls on the curve. A similar curve is available on diesel.

4. Annual payback for large vehicles in dollars and months.

5. Optimizer limited warranty.

Furthermore, we can't provide more articles because there isn't very much information available on platinum breakoff in gasoline or diesel in the combustion process at the temperatures we are using. The results on our testing are constant.

Thanks again. I hope to hear from you by February 11. It appears that the evaluation must be positive due to the information we have provided and the testing done.

Sincerely,

Leon Rosky

Dr. Leon Rosky
President

LIR:va

Enclosures

Optimizer Center, 220 Lynn Street, Flushing, Michigan 48433 313 659-2000

Optimizer® Ltd

February 18, 1983

Environmental Protection Agency
Motor Vehicle Emission Laboratory
2565 Plymouth Road
Ann Arbor, Michigan 48105

Attention: Mr. Merrill W. Korth
Device Evaluation Coordinator
Emission Control Technology Division

Dear Mr. Korth:

This letter is in answer to your communication of February 7, 1983. We will attempt to answer your questions as concisely as possibly. As per our conversation of February 16, we would like to request a meeting with you so that any further clarification can be made in person and through direct discussion.

In reference to your letter, our answers will be given according to your numbering sequence.

1. In reference to Model 1200G, the application should read "Gasoline Unit - Passenger Vehicles and Light Duty Trucks". The Model 2200G will be designated "Gasoline Unit - Heavy Duty Gasoline Trucks. Model 1150G and 1200G are interchangeable depending on flow rate of vehicle and heat required.

2. All the models being evaluated are single bed catalyst. Our patent pending covers both single and double chamber units.

3. There are no fuses or circuit breakers to protect the relay if there is excessive current draw. The relay itself acts as a circuit breaker.

The following answers are to your questions which were raised as a result of one of our prior conversations.

1. The changes in the units that are presently being manufactured for sales involve the heating mechanism only. All the prior units had a shorter rod length. In order to obtain greater

1. (con't)

dispersion of the heat without changing the resistance of the wire and the temperature limits (which were described previously in our application), we have lengthened the heating rod, thereby obtaining a greater surface area. This allows us more diffuse heat throughout the unit. All models are now using the longer heating element. We notice that at ambient temperatures below 35 degrees we see quicker, more uniform heating of the catalyst bed along with the fuel flowing through it. There is a direct relationship between the temperature of the fuel, the amount of platinum in the fuel exiting the Optimizer, and fuel economy.

2. Platinum metal (.9%) is coated on an inert aluminum oxide support material similar to automotive emission catalyst. Total catalyst weight in a single unit Optimizer is 250 grams. Residual trace metals present in parts per million are iron, zinc, copper, antimony and tin. Also present in much smaller traces are calcium, potassium and sodium. Present in parts per billion are bismuth, lead and arsenic.

3. Optimizer has tested mostly on the highway due to the desire of keeping conditions as stable and results as accurate as possible.

   City driving cycles have not been tested as such. When the laboratory results of platinum found in the fuel were correlated with fuel economy on the highway, it was noticed that as the heat allowed a greater breakoff of platinum, the fuel economy improvement results were improved. Due to the principle of better heat yielding more platinum breakoff, it stands to reason that with lower speeds, less wind resistance, better heating and more idling, the city cycle would allow better results. Since it was difficult to count on the testing conditions in the city always being the same, no city cycle tests were run.

The following relates to your items numbered 1 through 13 contained in your letter of February 7.

1. Refer to the first item of this letter, which clarifies the questions about model 1200G.

2. Model 1150G, G500 and 1500G are the same unit.

3. This has previously been answered in this letter.

4. Yes.

5. Yes.

6. August/September testing at A.T.L. is still valid. We learned that 1,000 miles accumulation with the device is necessary for Optimizer benefits to be seen. We stopped using the return line due to loss of heat within the system. We were also concerned about over-heating in the warm weather. Now that the condenser unit (to prevent vapor lock) and a longer heating element (to improve dispersion of heat within the Optimizer) are used, the system is viable.

   We have three (3) patentapplications pending on the Optimizer. One of them incorporates the use of the return line, check valve and relief valves. We have tested the Optimizer using only a return line and find no appreciable difference in fuel economy that can be attributed to the return line itself. The check valves are only for the purpose of not allowing fuel to flow backward through the return line, depriving the carburetor of fuel. The relief valve is not a pressure regulator, but regulates the flow back through the return line, which has some effect on the pressure to the carburetor. Timing adjustment is made in that system also. The results of the August/September testing are indicative of the device even as installed today.

   As stated previously, we feel the results of the August/September tests would have been improved with the use of the condenser and a longer heating element with or without the return line system.

7. Yes.

8. Answered previously in this letter, and the Optimizer answer is also applicable.

9. Yes.

10. Yes.

11. Some of the vehicles did have the return line, check vales and relief valve. We are appending a list with a check mark to delineate those that were tested with the three items in the system.

12. Yes.

13. Optimizer's answer is correct except that the bogey vehicle was positioned 100 yards (not 1,000 yards) ahead of the test vehicles.

In summary, we are sure that EPA recognizes that change is constant throughout the research and development process. There is no doubt that we have had certain amount of change also, through the testing procedures at Automotive Testing Laboratories. We have not, and we stress the word not, changed any part of the process having to do with the theory of operation of the Optimizer. We have refined this process by modifying the heating element. We now have two viable options for installation, namely both with and without the return line system. The tests that we did at Automotive Testing Laboratories did not show the full benefit of the Optimizer due to the lack of adequate heat dispersion within the unit. We are sure that, had the heating mechanism been of the type we are presently using, the results on those tests (A.T.L. - August/ September and November) would have been better.

It is our belief that if any further questions come up, we should meet and discuss them in order to clearly understand one another. We have spoken with many individuals in the automotive engineering field and they appear to be as excited as we are with the prospect of low temperature platinum breakoff into the fuel system (gas and diesel). Many of the questions that may come up from here on should be answered by the confirmatory tests which you at EPA should elect to do. Hoping to hear from you very soon, we remain,

Sincerely,

OPTIMIZER, LTD.

Dr. Leon I. Rosky
President

LIR:va

Enclosures

file "Optimizer" 79 MWK

ATTACHMENT L

We will meet to discuss this
Ralph

Optimizer® Ltd

March 14, 1983

Environmental Protection Agency
2565 Plymouth Road
Ann Arbor, Michigan 48105

Attention: Mr. Ralph Stalhmand
Director of Test Evaluation

Dear Mr. Stalhmand:

This letter is being written as a result of a telephone conversation between Mr. John White of EPA and myself on Friday, March 11. Mr. White notified me that EPA had decided not to test the Optimizer. After he was questioned as to the reasons for this evaluation, Mr. White stated that the issues of NOX and timing advance were questionable. I am not going to relate to those specific items at this time, but they have been addressed in the past through Tony Barth and Merrill Korth. It is our feeling that there was a complete disregard for the testing done at Automotive Testing Laboratories and at Optimizer, as demonstrated by Mr. Whites call.

As I stated on the telephone, I will be out of the country for at least 30 days, and upon my return would like to have a meeting with EPA. The results of our meeting of March 4, 1983 with Tony Barth and Merrill Korth gave us the impression that the evaluation would be positive. It is very difficult to understand what happened in the interim.

There are many questions that we have relative to Automotive Testing Laboratory's testing procedures. Tony Barth was supposed to clarify this and notify us of his findings. We never received his communication. That will have to be clarified at our meeting.

We began our discussions with EPA in June of 1982. Throughout that time, we have had good rapport with Merrill Korth. Many questions have been asked of us, and we have responded fully and promptly. We would like to maintain that type of relationship. Our impressions are that the feeling is mutual as far as EPA is concerned.

I have just received notification from EPA as to a change in the policy of payment for confirmatory testing in the EPA laboratories. It would seem incongruous that after beginning this process in June of 1982, having submitted the application in December of 1982, that we would be told at this date of a change in payment policies.

As you can tell from this letter, we are quite upset at the evaluation by Mr. White. If it were not that we know the results of our testing and what the Optimizer can do, we would not be in the present position of writing this letter.

We thank you very much and hope to hear from you very soon.

Sincerely,

OPTIMIZER, LTD.

Dr. Leon I. Rosky
President

cc: Senator Donald Riegle

UNITED STATES ENVIRONMENTAL PROTECTION AGENCY
ANN ARBOR, MICHIGAN 48105

March 28, 1983

OFFICE OF
AIR, NOISE AND RADIATION

Dr. Leon I. Rosky, President
Optimizer, Ltd.
220 Lynn Street
Flushing, MI 48433

Dear Dr. Rosky:

We received your letter of March 14 in which you raised several issues that I will attempt to answer and clarify.

The purpose of the March 4 meeting was to give Optimizer and EPA personnel the opportunity to discuss any unresolved questions relating to the Optimizer device. Mr. Barth stated that he expected to shortly clear up his minor concerns about the data (principally, which data should be incorporated in his analysis of the data) and expected to have an analysis done by March 8. He anticipated that EPA could make a decision on confirmatory testing by March 10. The analysis of the ATL data showed that there was a small improvement in fuel economy and a large increase in NOx. We feel that this is consistent with the effects to be anticipated when timing is advanced per the device installation instructions. Since modifications to a vehicle which cause emissions to rise can be considered tampering, we have no need to perform confirmatory testing and will, therefore, complete the evaluation using the information now available. During your telephone conversation with Mr. White, he informed you of our course of action in advance of a formal notification.

Your statements about the effects of the device on emissions and fuel economy were considered in performing our analysis and reaching a conclusion. Contrary to the statement in your letter, the testing at ATL and Optimizer was a crucial element used in making our decision.

Also, at the meeting we did not state that our evaluation would be positive. We stated that we were impressed by the magnitude and apparent quality of the testing done by Optimizer, but that any conclusions about the device or decision to test at EPA would be based on the analysis of data which was yet to be performed.

Shortly after our meeting with you, Mr. Barth further discussed the ATL testing with ATL. This discussion satisfactorily clarified that the tests to be considered were those submitted with your application. He also clarified a few minor points about the test procedures and nomenclature which we can discuss at the meeting you requested.

You also questioned the letter sent to you stating that there was a change in policy regarding payment for confirmatory testing performed at EPA. We have sent similar notices to all people we sent 511 packages to in the recent past. We informed you of this change in policy at our meeting. We also said that, although we did not anticipate applying it to applicants, like yourselves, who were well along in the evaluation process, we could not guarantee it.

As Mr. White told you, we are proceeding with the evaluation. However, since completing the process will take several weeks, there is ample time for you to meet with us in early April prior to the report being published. Please notify me as soon as you return so that the meeting you requested can be arranged soon. If I can be of any further assistance, please contact me at (313) 668-4299.

Sincerely,

Merrill W. Korth
Device Evaluation Coordinator
Test and Evaluation Branch

Optimizer® Ltd

May 12, 1983

Environmental Protection Agency
Motor Vehicle Emission Laboratory
2565 Plymouth Road
Ann Arbor, Michigan 48105

Attention: Mr. Merrill W. Korth
Device Evaluation Coordinator

Dear Mr. Korth:

As I was out of the country until recently, no response to your letter dated March 28 was made. In preparation for our meeting of May 17, the following should be considered and discussed.

1. Enclosed you will find copies of two different test plans submitted to EPA at our meeting of July 19, 1982. During this meeting, Optimizer, Ltd requested that a timing advance sequence be done in order to establish the effect of timing advance alone on the vehicle. EPA subsequently rejected this request and stated they wanted the whole system tested and then removal of the device as a second sequence. Optimizer, Ltd made it clear at that time that there was a "run-in" and "wear-off" period, and that there would be an effect from the Optimizer still present after the device was removed (see pages "A", "B" and "C" attached).

2. Fuel economy obtained in the two programs (October 7, 1982 and December 1, 1982) is within the range as written in the guidelines for the EPA 511 Program for Retrofit Devices and Fuel Additives.

3. In the first program, vehicle #8982 has a baseline on NOX above EPA specifications, and therefore should not have been tested (Figure 1). Vehicle #7957 (Figure 2), in both city and highway cycles, was slightly above EPA specifications with the Optimizer, but only slightly below specifications on baseline in city and above specifications in highway on baseline.

   In the second program, vehicle #0267 (Figure 3) was below EPA specifications for NOX for both city and highway baseline sequences, and remained below except on the last sequence, where spark plug wires failed (the NOX elevated dramatically). It should be noted that in all

3. (Continued)

sequences, NOX was at or below EPA specifications. Furthermore, on the highway sequence with the Optimizer, parameters adjusted, no miles, the NOX decreased over the previous sequence of Optimizer alone. Vehicle #2430 (Figure 4) was above specifications in baseline on both city and highway, and should not have been used.

We are not able to understand how the Optimizer is being faulted for elevations in NOX when only a .024 increase has been observed in the worst case (with Optimizer only, Figure 3), with the only vehicle that met all NOX specifications on baseline. In fact, with parameter adjustment, NOX was decreased in the highway cycle and the vehicle with the Optimizer met all emission specifications. Enclosed are copies of the graphs obtained from Automotive Testing Laboratories demonstrating these points.

4. Through many tests on the Optimizer device, we have found that platinum coats the combustion surfaces in an engine, thereby improving fuel economy. We have searched through the literature very meticulously and have found very little information relative to any testing done anywhere utilizing low temperature catalysis of fuel. We have sent to you an article from Brookhaven Research Center and another about the Ricardo catalytic engine, which shows some related work in this area. We realize that this is a new concept, but it would appear the EPA must look at the facts of test results in relation to the process that is used in order to evaluate any device. In our process, as we have previously explained to you , the device can be removed and a further increase in fuel economy will still be obtained until the platinum effect has disappeared from the combustion surfaces of the engine. Therefore, the increase in fuel economy of 9.8% to 10.4% city and 8.3% to 9.7% highway (Figure 5) are solely attributable to the Optimizer, not to any parameter change based again on data furnished to you showing this effect.

5. The second program was done to show the effect of the device on fuel economy both with and without timing advance. It proves that timing change is minimal by itself (Figure 6). We use timing advances because it is our contention and is documented in the literature that a timing advance helps to utilize any improvement in combustion. Timing advance with Optimizer provides a synergistic effect so that fuel economy is further enhanced beyond that of Optimizer alone.

We believe that in past correspondence between Optimizer, Ltd and EPA, all the above points were clarified. As we alluded to above, most probably the newness of this concept and some modifications made between the first and second program have complicated your evaluation. We hope that with this clarification, it becomes clear that the fuel improvement is not due to the timing and that the NOX increase is not due to the Optimizer. Your use of the word "tampering" does not apply to our device for the reasons stated above.

Furthermore, as was stated at our last meeting with you, certain inconsistancies in the testing results and procedures at Automotive Testing Laboratories and the use of vehicles which were out of EPA specifications for emissions (in fact, EPA recalled some cars of this year, make and model for being above specifications on NOX subsequent to our testing), bring many questions to mind, and at an appropriate time will be investigated.

We thank you very much for your willingness to discuss this evaluation. We are asking that in light of the expense incurred by us, and the vase amount of testing done both through independent laboratories and Optimizer, Ltd that the judging be done with an understanding of our device. There is no doubt in our minds that fuel economy is obtained without an increase of emissions and that this device will benefit the consumer. In that light, EPA has an obligation to test and prove the efficiency of the Optimizer.

Sincerely,

OPTIMIZER, LTD.

Dr. Leon I. Rosky
President

LIR:va

Enclosures

cc: Senator Donald Reigle

mmic file Optimizer



ATTACHMENT O

Optimizer® Ltd

May 20, 1983

Environmental Protection Agency
Motor Vehicle Emission Lab.
2565 Plymouth Road
Ann Arbor, Michigan 48105

Attention: Mr. Merrill W. Korth
Device Evaluation Coordinator

Dear Mr. Korth:

We wish to thank you for the time spent with us in discussing EPA's evaluation of the Optimizer. We would also like to thank both you and Tony Barth for your candid remarks, but many questions remain which, in summary of our meeting, we want to put in writing at this time.

It is our contention for the following reasons that your evaluation of the Optimizer is erroneous for the device as manufactured today.

1. In the first program of testing (vehicle #8982 and vehicle #7957), a return line, check valves and timing advance were used. The check valve and return line were not used in the second program (vehicles #2430 and #0267), and are not a part of the present Optimizer system. Therefore, utilization of these two vehicles is seen as background information and is not relevant to the Optimizer in its present form and as it will be marketed. In fact, it is not appropriate to write an evaluation concerning a product which will never be marketed.

2. You have concluded without factual basis relative to the Optimizer process that a timing advance will yield an increase in oxides of nitrogen and thereby may make use of that parameter unfavorable for the Optimizer device. If EPA objective testing per mutually acceptable conditions factually demonstrates a relationship between timing advance (with Optimizer) and an increase in NOX, then Optimizer (which has demonstrated an increase in economy without timing advance) can be marketed without a timing advance. It should be noted in evaluating the second program (vehicles #2430 and #0267), that on the sequence marked Optimizer after 1,000 miles at factory specifications, the NOX does not increase over the acceptable 10% elevation allowed. Please note that at our meeting it was stated by EPA that whenever you advance

the timing, the NOX will increase. On vehicle #0267 on highway baseline, NOX was reported as .882 and with the Optimizer at factory specifications, it increased to 1.024 and with the timing advance, it decreased to .906. This demonstrates an inconsistancy in your statement. In vehicle #2430 there was a continued increase from baseline to Optimizer at factory specifications (NOX within the 10% error range) to Optimizer with timing advance. However, in vehicle #0267, NOX decreased between Optimizer at factory specifications and Optimizer with timing advance (NOX again within the 10% error range). This proves that timing does not in and of itself, or timing with the Optimizer, always cause NOX elevations.

3. On the units used in the second program (vehicles #2430 and #0267) a condensing unit was used which actually is not the same as that which we are using at the present time. The present unit is more efficient and cools the fuel to levels as low as the temperature prior to entering the device.

4. As we stated at the meeting, new information was supplied to us that differed from that which we had previously received from EPA. I now refer to information (obtained in July of 1982) as given to us by your office relative to emissions which show the standards according to vehicle year of manufacture for all pollutants into the air from vehicle exhaust. As was previously stated, EPA made it clear in discussions and in print that we would be judged on the results of emissions according to the EPA guidelines. It wasn't until our meeting of May 17, 1983 that we were made aware that we are being judged on the percentage increase over baseline. Neither did EPA in the meetings we had prior to testing, or in their literature supplied to us, nor did ATL in our discussions with them as an approved EPA laboratory, state that we would be judged in this manner. We have evidence to show that even OEM manufacturers are not evaluated in the manner described above. We will not accept being singled out and evaluated by means not accepted within the automotive industry.

5. Referring to your handout entitled "Potential Tampering Liability Associated with Fuel Economy Retrofit Devices" (copy enclosed and pertinent statements underlined), paragraph 6 says that any devices must meet applicable emissions standards. The Optimizer does meet those standards, and we should be judged accordingly. This is further evidence that your evaluation at this time is not correct and would be damaging and arbitrary utilizing irrelevant information.

In light of the above statements, we are requesting the following:

A. We intend to market a device different from that tested. Therefore, most of the information that you presently have at your disposal must be used as background information only.

B. We wish to amend the July 1982 application to conform to the results of expensive testing over six to nine months done at an EPA approved laboratory and with EPA's help and guidance so as to reflect the accurate results without the need for new testing.

C. We request an accurate report of the documented testing from this EPA approved and recommended laboratory:

1. In that fuel economy is seen with the use of the Optimizer.
2. That some increase in NOX may be demonstrated with a timing advance.
3. That without a timing advance, no increase in NOX is seen in accordance with accepted EPA testing standards and procedure (± 10%).
4. That in no case did the Optimizer show an increase in NOX over standards.

D. We at Optimizer wish to apologize for our part in the confusion caused by ATL, EPA and Optimizer jointly during the testing phase of this project. As we told you at the meeting, we are convinced that the product by itself with no parameter changes will stand up to the test of both fuel economy improvement and emissions scrutiny. A negative evaluation based on insufficient data is not fair to Optimizer and in fact could be detrimental. We do not believe that a subsequent retraction is ever as strong and as well understood by the public as the initial rejection. We reaffirm our feeling that we are not interested in sales based on a device which does not perform a meaningful service for the consumer. We do not mean to attempt to "pull the wool over the public's eyes", but at the same time, do not wish to be judged either prematurely or with insufficient data.

Thanks again for all of your courtesies, and if there are any questions, please feel free to contact us.

We remain,

Very truly yours,

OPTIMIZER, LTD.

Leon Rosky

Dr. Leon I. Rosky
President

LIR:va

cc: Senator Donald Riegle

Enclosure

## Potential Tampering Liability Associated with Fuel Economy Retrofit Devices

Section 203 (a)(3)(A) of the Clean Air Act (Act) prohibits any person from removing or rendering inoperative any emission control device or element of design installed on or in a motor vehicle or motor vehicle engine prior to its sale and delivery to an ultimate purchaser and prohibits a dealer or manufacturer from knowingly removing or rendering inoperative any such device or element of design after such sale and delivery. The maximum civil penalty for a violation of this section is $10,000.

Section 203 (a)(3)(B) of the Act prohibits fleet operators and persons engaged in the business of servicing, repairing, selling, leasing, or trading motor vehicles or motor vehicle engines from knowingly removing or rendering inoperative any emission control device or element or design installed on or in a motor vehicle or motor vehicle engine. The maximum civil penalty for a violation of this section is $2,500,

Installing a fuel economy device or system may render inoperative a device or element of design of an emisson control system, and thereafter, could be considered tampering under section 203 (a) (3) of the Act.

The Act does not prohibit individuals, provided they do not fall into one of the above mentioned regulated categories, from tampering with the emission control devices on in-use vehicles. Applicable state and local laws, however, may prohibit individuals from tampering with, registering, selling, or operating a tampered vehicle.

It is EPA's enforcement policy not to initiate enforcement proceedings against a regulated party who installs a retrofit device if that person has a reasonable basis for knowing that the use of that device will not adversely affect emission performance. This policy is set out in Mobile Source Enforcement Memorandum No. 1A.

There are two different methods for establishing a reasonable basis for knowing that emissions are not adversely affected by the installation of a retrofit device: 1) the installer knows of, or the manufacturer of the device represents in writing, that Federal Test Procedures (FTP) emission tests have been performed as prescribed in 40 CFR 86 showing that the device does not cause similar vehicles to fail to meet applicable emission standards for their useful life; or 2) a Federal, State or local environmental control agency expressly represents that a reasonable basis exists. Such an agency determination is limited to the geographic area over which the Agency has jurisdiction. The results of the EPA sponsored vehicle emission testing which is done under the authority of Section 511 of the Motor Vehicle Information and Cost Savings Act can be applied to similar vehicles throughout the country.

If the results of EPA sponsored emission testing of a retrofit device show that emissions increase, EPA will publish a Federal Register Notice explaining the legal implications of those findings on persons engaged in the business of servicing, repairing, selling, leasing, or trading motor vehicles, fleet operators, new car dealers and individuals. The Notice will alert the regulated parties that the installation of such a device by them may be deemed to be a violation of section 203 (a) (3) of the Act.

The results of an FTP test are valid only for similar vehicles. Therefore, the test fleet should be diverse and large enough to provide an adequate data base from which conclusions can be drawn with reasonable confidence. When appropriate, however, analyses based upon engineering judgment can be used to determine the applicability of FTP test results to other vehicles and the devices' effect on the durability of the emission control systems.

DONALD W. RIEGLE, JR.
MICHIGAN



# United States Senate

WASHINGTON, D.C. 20510

June 9, 1983

The Honorable William D. Ruckelshaus
Administrator
Environmental Protection Agency
401 M Street, S.W.
Washington, D.C. 20460

Dear Bill:

I would like to acquaint you with a situation I find most disturbing.

A Michigan based company, "Optimizer, Ltd.", has developed a device with the potential to reduce fuel consumption in internal combustion engines. Prior to marketing this device, Optimizer, Ltd. voluntarily contacted EPA's Motor Vehicle Emission Laboratory in Ann Arbor, Michigan to obtain a product evaluation. In accordance with EPA application procedures and policy guidelines, Optimzer, Ltd. supplemented company collected test data with tests conducted at an EPA approved independent laboratory. Furthermore, Optimizer, Ltd.'s staff proceeded with EPA recommended testing procedures even though they felt that the procedures they had originally suggested would provide a more accurate assessment. These testing modifications were agreed to by Optimizer, Ltd. because of the staff's confidence that even these preliminary tests would result in positive EPA findings and subsequent federally funded testing. It now appears, however, that EPA is preparing to publish a negative evaluation based upon testing results which appear to be both inconsistent and subject to a significant degree of technical interpretation. In addition, since Optimizer, Ltd. has made a number of technical improvements to their device subsequent to last summer's testing, a portion of the data used in the EPA evaluation appears inappropriate and out of date.

I feel that publishing any assessments of the Optimizer's performance based upon the testing conducted last summer by the independent laboratory would be premature. A Federal Register notice conveying a negative evaluation based upon questionable test results may well destroy the future market potential of what could be a valuable device. I would like to ask that the publishing of any EPA assessments of the Optimizer be delayed until a meeting with representatives of Optimizer, Ltd., your staff and other interested parties can be arranged.

I am also requesting that EPA fund additional testing of the Optimizer in order to resolve any outstanding technical questions. I am aware that recently promulgated EPA regulations preclude federal funding for device testing, but I feel that the Optimizer, Ltd. group warrants special consideration. The basis for my request is twofold. First, Optimizer, Ltd. has been working with EPA staff in good faith since May 1982 under the assumption that federal testing would be forthcoming upon receipt of a

positive assessment. Secondly, Optimizer, Ltd. has spent over $100,000 of company funds to date on device testing. This amount is far in excess of that spent by other developers of similar products who have subsequently received EPA funding. I have enclosed a recent article highlighting a case in which EPA funding was awarded for testing a similar device with little prior testing. Consequently, I do not think that this request is without precedence.

In closing, it is my hope that every effort will be made to give a fair product assessment to this small business venture which would most probably result in new jobs and economic growth within the battered Michigan economy.

Your attention to this matter is greatly appreciated.

Sincerely,

Don Riegle

Donald W. Riegle, Jr.

DWR/jev

Enclosure

cc Mr. Merrill W. Korth, EPA Ann Arbor
Dr. Leon Rosky, Optimizer, Ltd.

Automotive News®

December 20, 1982

© Entire contents copyright, 1982, by Crain Automotive Group, Inc. All rights reserved.
Reproduction or use of editorial content in any manner without permission is strictly prohibited.

58th year—$40 per year, $1.00 per copy

EPA would do the job for almost nothing

# U. S. to spend $175,000 to test politico-backed fuel device

By Jake Kelderman
Washington Staff Writer

WASHINGTON.—The Federal Government, at the behest of two congressmen and the counsel to the Vice President, C. Boyden Gray, is about to pay as much as $175,000 for the testing of an alleged fuel-economy device that the EPA would test for next to nothing.

Known as the Webster-Heise Valve, for its inventors, Sherwood Webster, Richard Heise and Douglas Heise, the device is alleged to improve fuel economy by up to 20 percent, increase torque by up to 40 percent, decrease nitrogen oxide emissions by up to 50 percent, cut carbon monoxide by up to 45 percent and cut hydrocarbons by up to 13 percent.

Further, it is alleged to allow cars to run on 75-octane gasoline.

Among investors in the valve are former President Gerald Ford; Ford's former White House Counsel, John Marsh; Senator John Warner, Virginia Republican, and former Senator Carl Curtis, Nebraska Republican.

That political clout and a letter from Transportation Secretary Drew Lewis calling the device "extremely interesting" and a possible "breakthrough with respect to pollution control, fuel economy and octane ratings" may explain why the DOT is paying for the testing of the device.

• First brought to public attention about two years ago, the device has had a rebirth of sorts in the wake of a Congressional Research Service analysis concluding that it presents the "potential for substantial national benefits in fuel efficiency, reduced dependency on imported oil, improved balance of payments position and reduced automotive air pollution," and the subsequent call for further testing of the valve by Reps. James Broyhill, North Carolina Republican, and Richard Madigan, Illinois Republican.

The usual practice on fuel-economy devices is for the investor to apply to the EPA's Technology Assessment and Evaluation Branch for confirmatory testing.

That office, specifically established to assess the value of alleged fuel-economy devices, will accept a device for complete testing at EPA's Ann Arbor (Mich.) Emissions Testing Lab free of charge to the inventor, provided preliminary data indicates a reasonable potential for fuel-economy improvement.

To get such preliminary data, inventors typically need to equip a vehicle with their device and have it tested on a dynamometer at an EPA-approved test facility and over an EPA-

Continued on Page 30, Col. 1

## A Christmas Fantasy
### *Or John Z. the Snowman*

*'Twas the night before Christmas, Detroit was quite tense;*
*Sales were no better than Roger Smith's PR sense.*
*There were plenty of cars, there was no need to make 'em,*
*And with rebates we had to pay buyers to take 'em.*
*Efforts to sell cars were clumsy, maladroit,*
*Like Ford's Jackie Stewart at the Grand Prix-Detroit.*

*Auto persons nestled all snug in their beds,*
*While visions of just-in-time danced in their heads;*
*Local content and kanban did haunt all their sleep*
*and the thought of Yank soldiers driving Le Jeep.*
*(The names of the men at the top seemed to show*
*That American Motors is as French as Peugeot.)*

*And American workers singing "Honda over all"*

# IRS probes U. S. subsidiaries of Toyota, Nissan and Honda

By Jake Kelderman
Washington Staff Writer

WASHINGTON. — The Internal Revenue Service is investigating the U. S. subsidiaries of Toyota, Nissan and Honda for possible illegal profit transfers between themselves and their Japanese parent firms that could be depriving the U. S. Treasury of millions in taxes.

According to information obtained by AUTOMOTIVE NEWS, the investigation, a so-called 482 investigation was begun by importing companies for alleged dumping. That investigation found the Japanese makers innocent of such activity.

In the present investigation, the IRS is scrutinizing the manner in which the U. S. subsidiaries of Toyota, Nissan and Honda have chosen to determine, for tax purposes, the so-called "arm's length" or transfer price of vehicles sold to the U. S. subsidiaries by their parent firms.

This price, which is an expense to the U. S. subsidiary, plays a major role in what their taxable income will be for the year.

The IRS apparently suspects

Continued on Page 30, Col. 4

breaking news

93

# U. S. to pay $175,000 to test valve

Continued from Page 1

ɔproved test cycle. Such test-ıg typically costs from $5,000 ı $7,000, EPA sources said.

Webster and Heise have nev- asked EPA to test their de-ice and, though they have had reliminary testing done at an PA-approved lab, the data re-ılting from that testing (the ıme data the Congressional .esearch Service used in its as-essment of the Webster-Heise alve) was deemed by an EPA fficial as being "less than the ıinimal data" it would need ɔ decide on whether to accept ıe device for further testing.

When asked why he had not sked EPA to test his device, as ıany other inventors before im had, Webster said it was ecause he "couldn't trust the PA," and that in any case they vould not run the kind of tests ıe wanted.

"They don't test for perform-nce or wide-open throttle and hey use 97 indolino gasoline, a asoline not representative of hat is on the market," he said.

"We have no intention of go-ng there until we've completed ur own tests," he said.

Webster's mistrust of the PA stems back to his involve-ıent in the early and mid-'70s, vith another fuel-economy in-ention known as the "LaForce ngine."

Basically a 1974 AMC Hornet ngine modified to run on a ɔaner mixture while utilizing GR, advanced timing and a adical induction system that ɔparated the fuel charge by roplet weight, it, too, promised reater fuel economy, enhanced ower and reduced emissions.

EPA tested the engine and hile it did show some of the ıprovements promised, it ıdn't match what AMC man-ɔed to do with the 1975 pro-uction version of the same en-ne.

Webster and other members the LaForce group charged heating by the EPA," but a ıbsequent investigation by the enate Commerce Committee ndicated the agency.

Later, a "blue sky" investiga-on by the Securities and Ex-ıange Commission led to the dictment and conviction of dward LaForce for selling un-gistered stock in firms promot-g his invention.

The new device is said by ebster to be a further refine-ent of the fuel separator sys-ın used in the LaForce engine.

The air-fuel mixture flows through the screen and vaporizes in an optimal fashion, according to the inventors.

A large number of fuel vaporizing devices similar in nature to the Webster-Heise have been tested by EPA over the years but none has ever been shown to improve significantly the efficiency of today's gasoline engine, which burns gasoline at about 99 percent efficiency.

According to auto engineers familiar with vaporizing devices and the theories behind them, improving the vaporizing of the air-fuel mixture helps improve performance only at low temperatures. They say there are probably more "elegant" ways to do it than putting a screening device in the intake air flow.

They mention such things as the sonic carburetor, which sends the air-fuel mixture through a "standing shock wave" or a heated ceramic honeycomb, like that found on the Chevrolet Chevette and other GM cars, which heat the charge before it reaches the combustion chamber.

• Today's engine, with its sophisticated feedback emission control systems, modulated EGR, high-energy ignition and, in some cases, octane compensating fuel injection (Saab), is a pretty efficient unit, the engineers say. "Improving on it would take some doing," they say.

The DOT, meanwhile, has contracted to pay Sherwood Webster and his two partners, Richard Heise and Douglas Heise, $41,580 for 60 to 90 days of consultation on the testing of their valve. Further, it will pay $6,370 for such equipment as may be necessary to install and check out the device on two vehicles, one owned by Webster-Heise Corp. and one by the government.

It will pay $4,000 for two Webster-Heise valves and between $9,000 and $10,000 for one Dodge 400 equipped with a 2.2-liter engine.

Testing has already commenced at the Environmental Testing Corp. laboratory in Denver, and will consist of dynamometer tests utilizing the EPA urban driving cycle, the EPA highway cycle and special idling tests to determine fuel economy and emissions. In the course of all these tests, EPA-specified fuels will be used.

There will then be a series of road tests to determine octane requirements, wide-open throttle performance and driveability under hot and cold conditions.

A second set of tests, identical to the first will then be run at the Southwest Research Institute facilities in San Antonio, Tex.

• Chrysler, in addition to delivering the vehicles will assist in the testing program by providing such technical help as may be needed.

DOT will pay for the use of the testing facilities at ETC and SWRI, which, according to knowledgable sources, will likely amount to approximately $100,000.

"If it works out, it will be the best investment we've ever made," said Mike Mason, associate minority counsel for the House Health and Environment subcommittee.

Meanwhile, Broyhill and Madigan have introduced legislation that would allow the administrator of the Government Services Administration, in consultation with the Secretary of Transportation, "to require that at least 10 percent of new gasoline-powered cars in the federal fleet be equipped with the valve, should it prove to do all that it promises."

# AMC shifts Lepeu, Tierney; Lawrie, MacCracken retire

American Motors last week announced the reassignment of two vice presidents and the retirement of two others.

Given new duties were Jean-Marc Lepeu, now vice president - finance, and John P. Tierney, who was named vice president - finance staff and controller.

Lepeu, a former Renault ex-troller, and MacCracken had been with the firm since 1972, starting as corporate director of industrial relations.

With MacCracken's retirement, labor and industrial relations report directly to Richard A. Calmes, vice president - personnel and industrial relations.

In another personnel change

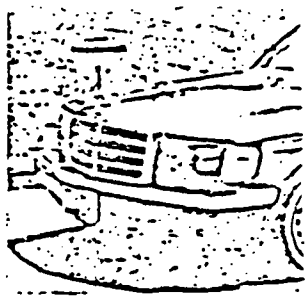

*Going to lengths* v

O'Donovan Mercede N. J., will convert a M a luxury limousine "fit cludes an extension c necessary to limousin price tag.

# IRS probin of Honda, M

the Japanese makers set higher than reasonable f vehicles they sold to thei subsidiaries. That would the taxes the U. S. firm: lower than they should b

U. S. tax regulations r that in determining arm's price, firms must use one c methods. These are, in de ing order of priority: The parable Uncontrolled P (CUP) method; the Resale (RP) method; the Cost (CP) method, or the Hy method.

The IRS thinks the should be using the CUP od, which determines the fer price based on the pr a comparable item in a sa tween unrelated parties.

The Japanese, on the hand, think the RP meth the one that should be used because the firms do not b sufficient similarities exis tween the U. S. and Jap markets to make comp reasonable. They also note the RP method takes into sideration whether the U. S sidiary is earning a suff profit.

Government sources c that the investigation is u way, but the IRS, as is th tom in all tax investigation fuses to either confirm or its existence.

International tax experts other auto firms, equally of this subject matter, sai investigations are not un for multinational comp But they were surprised length of the investigatio volving the Japanese. Cu arily these investigations about a year for each y

final



ATTACHMENT Q

UNITED STATES ENVIRONMENTAL PROTECTION AGENCY
ANN ARBOR, MICHIGAN 48105

June 14, 1983

OFFICE OF
AIR, NOISE AND RADIATION

Dr. Leon I. Rosky, President
Optimizer, Ltd.
220 Lynn Street
Flushing, MI 48433

Dear Dr. Rosky:

We received your letters of May 12 and 20 in which you raised several issues. Although most of these were discussed in our meeting on May 17, there are many which were not and several which still need to be addressed. We believe a formal response is necessary to make our position clear and prevent a misunderstanding.

In your letter of May 12, you raised several issues about the testing at ATL. Our comments below address these items according to your numbered paragraphs.

1. Paragraph 1 - Parameter adjustment tests. Your letter reiterated your concern as to when the parameter adjustment only (ignition timing) tests should be performed in a test sequence. We feel that the best sequence is as follows:

   a. Vehicles set to manufacturer's specifications.

   b. Mileage accumulation.

   c. Duplicate test sequences (baseline).

   d. Installation of device and adjustment of parameters.

   e. Mileage accumulation.

   f. Duplicate test sequences.

   g. Readjust parameters to manufacturer's specifications.

   h. Duplicate test sequences.

   We recognize the problem of carryover effects for the final test sequence. Also, the testing could be done in a different order and other tests and changes incorporated. However, we feel that the above sequence should be followed to minimize both the costs and the risk of test problems confounding the results. In any case, the ultimate goal is to obtain a fuel economy and emission comparison of a fully installed device to baseline results.

2. Paragraph 2 - Fuel economy guidelines. The EPA guidelines for fuel economy were established to allow applicants to size their test programs and to determine if the test results should be considered encouraging. The values were chosen to assure that a real difference in fuel economy can be detected with normal test-to-test variability. To determine if there is a potential benefit, the test results from the independent lab are analyzed to determine if any changes are statistically significant. Thus, it is a combination of fleet size, actual change in fuel economy, and actual test variability that determines if the device shows improvement.

   Therefore, although a fuel economy benefit is indicated for the device by some segments of the test program, this is not necessarily true for each segment for all of the many ways in which the data can be compared.

3. Paragraph 3 - Vehicle $NO_x$ levels. EPA does not have $NO_x$ specifications. Instead, there are prescribed levels of $NO_x$ that a vehicle cannot exceed when tested in a specific manner. In designing a vehicle to meet the standard, a manufacturer must seek a level sufficiently below the standard so that, when combined with production tolerances and normal system deterioration, the vehicle would not be expected to exceed the standard at 50,000 miles. The test used to certify vehicles is known as the Federal Test Procedure (FTP). This is a cold start, three part emission test. The hot start LA-4 tests you used are the second and third parts of the FTP. Although emissions are measured, the principal purpose of the Highway Fuel Economy Test (HFET) is to measure highway fuel economy. Thus, the $NO_x$ values obtained from LA-4 and HFET tests cannot be compared to the FTP standard.

   Hot start LA-4 emissions of $NO_x$ are anticipated to be higher than those over the FTP. Also, a vehicle which has been found to meet the specifications of the manufacturer may exceed $NO_x$ emission levels due to production tolerances, operating and maintenance history, or design deficiencies. Thus, a vehicle exceeding the standard is not necessarily unrepresentative. Requiring FTPs and automatically rejecting vehicles exceeding a standard would raise the costs of testing for an applicant by adding more vehicles and more tests. Furthermore, the independent lab testing by an applicant is used essentially to screen devices. EPA normally performs confirmatory testing on those devices showing emission and/or fuel economy benefits. Therefore, because we are interested in the emission and fuel economy effects as well as the overall emission levels, unless the data shows there is obviously something wrong with a vehicle, we accept the test data from an independent laboratory.

Our comments below address your comments in Paragraph Three about the $NO_x$ levels of the four test vehicles.

a. Vehicle #8982, the 1981 Oldsmobile V-6. The LA-4 baseline $NO_x$ levels appear to be high for a vehicle that is supposed to meet the 1981 $NO_x$ standard of 1.0 gm/mi. However, for the reasons cited previously, our intention is to include it in the Optimizer data base.

b. Vehicle #7957, a 1980 Chevrolet. The LA-4 baseline and device $NO_x$ levels are below the 1980 $NO_x$ standard of 2.0 gm/mi. As noted previously, there is no HFET $NO_x$ standard. We find no reason to reject this vehicle on the basis of emissions.

c. Vehicle #0267, the other 1980 Chevrolet. The LA-4 baseline and device $NO_x$ levels are below the $NO_x$ standard of 2.0 gm/mi. This vehicle is acceptable from an emissions viewpoint. We agree that, due to the spark plug wire failure, the final set of tests on this vehicle (Optimizer back to factory specs with no miles) should not be included in any analysis.

   We agree the data do indicate a decrease in $NO_x$ emissions for the HFET between the test with the Optimizer only and the test with the Optimizer and the adjusted parameters. However, this same pairing shows an increase in LA-4 $NO_x$ emissions. Furthermore, the more important comparison is the change in LA-4 $NO_x$ emissions between baseline and the installed device tests (with parameter adjustments). For this vehicle, this change is not statistically significant.

d. Vehicle #2430, the 1980 Oldsmobile. The LA-4 baseline and device $NO_x$ levels are below the $NO_x$ standard of 2.0 gm/mi. This vehicle is acceptable from an emission viewpoint.

Therefore, from an emission standpoint, three of the vehicles are completely acceptable and the other, vehicle #8982, although high in $NO_x$ emissions, is acceptable for the reasons cited above.

4. Paragraph 4 - <u>Fuel economy increase</u>. The data you cite for that Chevrolet indicate that there is a small increase in fuel economy with the device installed and a further and larger increase after the device is removed. If the device has a carryover effect, one would expect tests performed immediately after the removal of the device to be about the same as the device tests, not to increase immediately and to increase still further after 500 miles. Therefore, it also can reasonably be

argued that this is a combination of test-to-test variability and shift in vehicle fuel economy or even that the device has an inhibiting effect and should only be used occasionally. The other vehicle, #8982, shows no statistically significant changes of a similar nature. Therefore, we must conclude that the data do not support your statement.

5. Paragraph 5 - Second test program fuel economy effects due to timing. The test data show a progressive increase in fuel economy from baseline to device only and, finally, to device with ignition timing advance. Forty percent of the overall change occurs with the timing change. Thus, the data do not support your statement that the effect of the timing change is minimal.

6. Although, as you state, many of the items you addressed in paragraphs number one through five of your letter were addressed in previous communications, these items do not show that the fuel economy improvement is not due to timing, that the increase in fuel economy is due solely to the Optimizer, and that some of the $NO_x$ increase is not due to the device. Also, the modifications to the device between the first and second program were clearly and adequately addressed in correspondence between us prior to our analysis of the data. Thus, although the changes in the device may have complicated the evaluation, this did not prevent us from completing our analysis of the data.

7. Finally, you briefly discussed inconsistencies in the results and procedures at Automotive Testing Laboratories. Based on what was discussed at the meeting and our analysis and checks on the data, we know of no reason to reject the ATL results. The $NO_x$ levels and potential recall of some of the test vehicles are not cause to reject the ATL test results for the reasons cited earlier in Section 3.

In your letter of May 20, you further discussed the applicability of the ATL test results and raised several additional issues about our evaluation of your device. The sections below address these issues:

1. Paragraph 1 - Appropriate tests to be used in evaluation. After reviewing the information supplied with the application and several clarifications, we knew that, as you state, vehicles #7957 and #8982 were tested with a check valve and return line installed with the device. Furthermore, we were aware that the application was clarified to be for the device without these two components. Therefore, we knew that it might not be appropriate to use the tests on these two vehicles in our analysis. However, you stated that the tests were valid and representative and that you anticipated that the device would have shown a greater improvement if it was installed in your most recent

configuration. We cautioned you that our analysis would be based on the data as supplied, not some assumed improvement over these test results. Therefore, we feel that these results should be considered as more than just background information and that it is appropriate to include the test results for these two vehicles in our analysis of the test data.

Also, contrary to your statement, it is appropriate for EPA to evaluate products that will not be marketed, since marketing a device is not a prerequisite for a 511 evaluation.

2. Paragraph 2 - $NO_x$ effects of device. The key comparisons are between the baseline and device tests. Contrary to your statement, the data do show that the Optimizer with timing advance does increase oxides of nitrogen. Thus, there is no need for EPA to conduct a confirmatory test program to verify the emission increase.

   Our cursory analysis of the device tests done without the initial timing changes does show a trend of small increases in fuel economy and large increases in $NO_x$ emissions. However, at the meeting we did not state that a ten percent increase in $NO_x$ was allowed. We noted that we were concerned with both the percentage changes in emissions and emission levels. We stated that, with normal test-to-test variability, a ten percent change in $NO_x$ was usually not significant. On the other hand, the final determination of significance would be based on the test data. Note: at our meeting, I stated that for $NO_x$ the above number was five percent while Mr. Barth stated he thought it was higher, perhaps ten percent. We subsequently checked and confirmed it is five percent for $NO_x$.

   We also noted the change in $NO_x$ for the LA-4 and HFET tests of vehicles #0267 and #2430 for the baseline, device without timing adjustment, and device with timing adjustment tests. In three out of four cases, an advance in timing increased $NO_x$. The one case where it does not increase does not disprove the statement that timing advances increase $NO_x$.

3. Paragraph 3 - Changes in the condenser. Your prior correspondence does not indicate that a critical change in the condensing units was necessary nor did you modify the application to reflect the change in the condenser unit.

4. Paragraph 4 - Evaluation standards. The Section 511 process mandates that we evaluate the effects of the device on emissions and fuel economy. The percentage increase over baseline emissions, even if emissions are still below the standard is a valid comparison. Further, since vehicles are designed and

targeted to be at or below a given emission standard, a device which increases emissions, if installed on the total fleet, would similarily bias the fleet emissions to be above the standard.

On the other hand, changes made by the vehicle manufacturers are designed to apply to a select group of vehicles. Through the certification process, he can establish that any increases in emissions of these vehicles will not cause the particular vehicle family to exceed the standard.

5. Paragraph 5 - Tampering. The statement you reference states that the device must not cause vehicles to fail to meet their applicable emission standards for their useful life. For reasons cited in paragraph 4 above, increasing emissions can be interpreted as a cause for a vehicle to fail to meet the applicable standards.

6. Paragraph A - Marketing intentions. The applicability of the test data to the device being evaluated was clearly established in our previous correspondence. Therefore, contrary to your statement, the information in the evaluation is applicable to the device to be marketed.

7. Paragraph B - Amendment of application. We do not consider the request in this paragraph to be a valid and formal change of the application previously submitted. As we stated at our meeting on May 17, you are welcome to submit a new application incorporating a modified version of your device. However, to avoid confusion we insisted that it be submitted as a complete and separate document. We feel that any information or data now part of the current application could readily be extracted and placed in a new application.

8. Paragraph C - Request summary. We disagree with these statements to varing degrees for reasons previously cited in this letter.

We feel that we have fairly considered all the information you have provided and are proceeding with the evaluation process. Our conclusion is still that the device, when installed according to the current instructions, will cause a large increase in $NO_x$ emissions, a small increase in fuel economy, and may be considered tampering.

As we indicated at our May 17 meeting, if you submit a new application soon, we would note that fact in our present evaluation. However, as stated above, we do not consider your letter of May 20 to be a new and formal application. Furthermore, a subset of the present data may not, by itself, meet the evaluation data requirements. For example, if only a

two percent fuel economy improvement is noted, ten vehicles would need to be tested, or if the data we discussed in responding to paragraph two of your May 20 letter were used, no benefit is indicated.

I hope this detailed response has clarified our position. If you have any further questions, please contact me.

Sincerely,

Merrill W Korth

Merrill W. Korth
Device Evaluation Coordinator
Test and Evaluation Branch

ATTACHMENT R

UNITED STATES ENVIRONMENTAL PROTECTION AGENCY
WASHINGTON, D.C. 20460

JUL 14 1983

OFFICE OF
AIR, NOISE AND RADIATION

Honorable Donald W. Riegle, Jr.
United States Senate
Washington, DC 20510

Dear Mr. Riegle:

This is in response to your letter to Mr. Ruckelshaus dated June 9, 1983, discussing an automotive fuel economy device manufactured by "Optimizer, Ltd." Your letter asked that EPA fund additional testing of the Optimizer device, and that EPA delay publication of a technical report on the device until further meetings can be arranged between EPA and Optimizer, Ltd.

EPA evaluates fuel economy retrofit devices, such as the Optimizer, under the authority of Section 511 of the Motor Vehicle Information and Cost Savings Act (MVICSA). In order to perform these evaluations at a reasonable cost to the Government, it is necessary to require that applicants provide persuasive test data substantiating their claims. We have established precise protocols to be followed by EPA and the device manufacturer in determining the effectiveness of a device in improving fuel economy and in improving or degrading air pollution emissions. These procedures require the device to first be tested in a commercial laboratory whose proficiency has been recognized by EPA. If the private laboratory data indicates a likely fuel economy improvement, EPA may choose to perform more thorough confirmatory testing at the EPA laboratory in Ann Arbor, Michigan as part of its evaluation process. As provided in regulations under the MVICSA, EPA publishes the results of its evaluation in the Federal Register and provides copies to the Federal Trade Commission and the Department of Transportation.

Consistent with our requirements, the applicants obtained a considerable amount of data on the Optimizer device at an EPA recognized laboratory. In collecting and analyzing these data,

both Optimizer, Ltd. and EPA have followed the procedures specified in the EPA regulations and policy documents. EPA analyzed the private laboratory data and fully considered all of the information that was submitted by Optimizer, Ltd. The overall conclusion is that, for most vehicles, the device and the prescribed ignition timing adjustments of the engine will cause a small improvement in fuel economy along with a large increase in oxides of nitrogen emissions. These changes are attributed by EPA to the five degree advance in ignition timing rather than the device itself. Irrespective of improvements in fuel economy, installation of devices evaluated by EPA that have increased exhaust emissions has been considered "tampering" by EPA's Field Operations and Support Division.

Under this situation, to perform further testing of the device in the EPA laboratory would violate long-standing EPA policies. The Automotive News article attached to your letter was referenced as illustrating a precedent in which EPA supported testing of a retrofit device which had had little prior testing. I must point out that DOT is supporting the evaluation of the Webster-Heise device test program, not EPA. Had he applied to EPA for an evaluation, Mr. Webster would have been required to supply the same type of preliminary data as was Optimizer. A recent legal determination within EPA requires that device manufacturers who request EPA to test their device be held liable for all costs incurred by EPA in conducting such testing.

Optimizer, Ltd. indicated that technical improvements to their device have been made since they collected the data that was submitted to EPA, which could make the EPA evaluation out of date. However, EPA must report on the device as it existed when the data was collected. If the device has since changed and is now a different product that may produce different results, then a new application for evaluation will be welcomed but it must be accompanied by a clearly defined description of the new configuration and it, too, must have supporting data from a recognized laboratory demonstrating its effect on fuel economy and emissions.

EPA has recently met with Optimizer, Ltd., and numerous letters have been exchanged. We cannot see reasons for an additional meeting at this time, but if Optimizer can identify specific needs for such a meeting it certainly can be arranged.

In summary, we feel that EPA is fairly evaluating the Optimizer device using well established protocols. Our analysis of the data at hand does not justify further testing in the EPA laboratory, and we believe it would be appropriate to continue with the publication of our report on the device in the configuration which was tested.

Sincerely yours,

Charles L. Elkins
Acting Assistant Administrator
for Air, Noise, and Radiation

ATTACHMENT S

UNITED STATES ENVIRONMENTAL PROTECTION AGENCY

ANN ARBOR, MICHIGAN 48105

June 18, 1983

OFFICE OF
AIR, NOISE AND RADIATION

Dr. Leon I. Rosky
President, Optimizer, Ltd.
220 Lynn Street
Flushing, MI 48433

Dear Dr. Rosky:

This is in response to your letter of December 6, 1982 which submitted an application for an evaluation by EPA of the "Optimizer" device under Section 511 of the Motor Vehicle Information and Cost Savings Act.

The EPA evaluation of your product has been completed and a copy of the draft final report is enclosed. This report, entitled "EPA Evaluation of the Optimizer Device Under Section 511 of the Motor Vehicle Information and Cost Savings Act", will be made available to the public. Also enclosed is a copy of the summary which is expected to be published in the Federal Register. If you have any questions concerning this report, please contact Merrill Korth of my staff at (313) 668-4299.

Sincerely,

Charles Gray

Charles L. Gray, Director
Emission Control Technology Division

Enclosures

ATTACHMENT T

Optimizer® Ltd

July 28, 1983

Environmental Protection Agency
Motor Vehicle Emission Laboratory
2565 Plymouth Road
Ann Arbor, Michigan 48105

Attention: Mr. Merrill W. Korth
Device Evaluation Coordinator
Emission Control Technology Div.

Dear Mr. Korth:

Enclosed you will find our comments relating to the EPA Evaluation #EPA-AA-TEB-511-83-9 entitled "EPA Evaluation of the Optimizer Device Under Section 511 of the Motor Vehicle Information and Cost Savings Act".

Our comments will be made in accordance with page numbers and paragraph numbers used in your evaluation. It is our understanding that any comments and/or critique made on EPA's evaluation will require a further in-depth study and possible re-consideration of those points in your final evaluation.

In the preface to the evaluation under Section IV entitled "Summary of Evaluation", it must be stated that the Optimizer device used in the testing sequences submitted to E.P.A. for evaluation is not the device intended for marketing. This device which was tested has undergone modifications, improvements and refinements. Optimizer, Ltd intends to submit a new application to E.P.A. on their present Optimizer unit which will be marketed.

Your summary of evaluation does not cover those sequences which relate to the baseline, Optimizer unit alone (no timing advances), after 1,000 miles run-in. We believe that since those test sequences were done, a reference should be made to their existence, evaluation and performance in this section of the total evaluation of the Optimizer (in order so that there is no duplication of effort in commenting on this evaluation, all critique of the sections referred to immediately above will be made at the appropriate time in this letter).

On page #2, paragraph #3, we acknowledge that the original application we made to E.P.A. was for a device which included a timing advance. During the testing period, there have been numerous letters between Optimizer, Ltd and E.P.A. in which the subject of timing advance came up many times. The entire evaluation of the Optimizer done by EPA seems to be based on a judgement that all fuel economy increases are due to the timing advances and not to the device itself. The reason test sequences using an Optimizer device alone were performed was to show that with

the Optimizer device alone (no timing advances), a fuel economy increase would be seen. Therefore, the statement that "the device, coupled with ignition timing advance, is claimed to improve fuel economy..." is a true statement, but does not relate to the fact that the device alone, without timing advances, will also give fuel economy.

Page #9, Paragraph #1 - Theory of Operation of the Optimizer.

It DOES NOT state anywhere that for the device to perform and a fuel economy increase to be obtained, a timing advance is needed. While we may agree that at times improved fuel economy levels may be seen with ignition timing advance alone, even without any retrofit device, Optimizer, Ltd maintains that a timing advance is used to enhance the fuel economy increase received by the device alone.

Page #9, Paragraph #3.

Tests done by Optimizer, Ltd show platinum in the fuel as it exits the unit. There is laboratory evidence (attachment enclosed) to the effect that parts removed from an engine (from a vehicle with an Optimizer installed for 60,000 miles) displayed a platinum coating uniform in depth with very little carbon on the combustion surfaces. Optimizer, Ltd acknowledges that this is a new technology and that as yet we have not learned everything there is to know about the method of action. There are articles (some of which you were given by Optimizer, Ltd) that show that platinum used in engines will improve combustion. In most of those cases, the continuous introduction of the platinum was the primary problem which had to be researched.

Page #11, Paragraph #1.

The figures as stated in our installation instructions of 7,000 to 10,000 miles for changing the in-line fuel filter have been revised. That figure is more like every 30,000 miles.

Page # 13.

In table one, looking at the configuration column itself, the description "Optimizer after 500 miles, both on vehicles #7957 and #8982", is incorrect. We notice that there is a foot-note on that page correcting the mistake, but we believe that correction should be above, in the body of the evaluation. Anyone scrutinizing this report may not notice the footnote and believe this to refer to the Optimizer alone, instead of the Optimizer with parameters (return line, check valves and timing advance). No doubt the confusion here is due to what is written

in attachments C-4 and C-5 of the report. A.T.L. described in their test summary and results on these two vehicles the second sequence as "device after 500 miles". This is incorrect, and not footnoted on their report. This table shows that on the first two vehicles, the Optimizer after 500 mile sequence can be directly compared to the Optimizer after 1,000 mile sequence on the last two vehicles (#0267 and #2430). The facts are that the first two vehicles (#7957 and #8982) not only had timing advance, but had return line and check valves in place. The last two vehicles (#0267 and #2430) had timing advance only. The parameters were not the same in these two sequences.

Page #14, Paragraph Entitled "NOX Emissions".

Your first statement, "installation of the Optimizer caused large and statistically significant increases in NOX emissions for all vehicles", is not a true statement. On attachment C-6 (vehicle #0267), the NOX increase from baseline to Optimizer after 1,000 miles at factory specifications on the LA4 is 10%. On the H.F.E.T., NOX emissions were elevated 16%. On the H.F.E.T. from baseline to Optimizer with parameter adjustments, the increase was 2.7%. I would like to emphasize that the fact that the spark plug wires failed at this point was detrimental to Optimizer, Ltd because we could not prove a decrease in NOX on the sequence of Optimizer back to factory specs. It must be noted that with the timing advanced, the NOX decreased to a level well within any error range. On vehicle #2430, attachment C-7, the following is apparent. LA4, NOX emissions between baseline and Optimizer after 1,000 miles at factory specs, increased by 7.5%. In the sequence with Optimizer, parameters adjusted, no miles, the NOX increased to 20%. But in the last sequence of Optimizer back to factory specs, the NOX elevation was 2.8%. It is evident from this information that with the Optimizer, no timing advance, the NOX should be considered basically at a zero level. At this point, I would like to refer you to your letter dated June 14, 1983, page 3, item "c", second paragraph: "we agree the data do indicate a decrease in NOX emissions for the H.F.E.T. between the test for Optimizer only and the test with the Optimizer and the adjusted parameters. However, this same pairing shows an increase in LA4 NOX emissions. Furthermore, the more important comparison is the change in LA4 NOX emissions between baseline and the installed device test with parameter adjustments. For this vehicle, this change is not statistically significant. We want to reiterate that the statement made in your evaluation, page 14 under NOX emissions which states that the installation of the Optimizer caused increases in NOX emissions for all vehicles is not correct.

Page 15, Last Paragraph - Discussion of Test Results.

The statement "the overall expectation is that the use of the Optimizer would cause NOX emissions to sharply increase" is not a true statement as proven above. Nox emissions for certain sequences with Optimizer and timing advance had an elevation in NOX emissions. Sequences of Optimizer without timing advance did not have large increases in NOX emissions. In that same paragraph, it is written "thus, there is a need to distinguish between the effect attributable to the device alone and the effect attributable to the ignition timing adjustments

performed when installing the device". Optimizer, Ltd is very interested in doing just that. It is not noted anywhere in your summary, nor anywhere in the body of this report, that the sequences with Optimizer alone (no timing change) do not have increases in NOX emissions.

Page #16, Paragraph #2.

You have stated "however, the test conducted with the device installed, but without the timing advance (attachments C-6 and C-7) showed an increase in NOX emissions for both the city and highway cycles...". Again, we wish to reiterate that for the reasons given above, that is not a true statement. It appears that when looking at vehicles #2430, attachment C-7, no interest was paid to the Optimizer back to factory specs sequence (the last sequence done on that vehicle). If it had been looked at, it would have been noted that the NOX results were the same in that sequence as the baseline.

We take issue with paragraphs #3 and #4 on page 16 due to what has been described here. You can not state that all the results are due just to the timing advance. I would like also to refer to A.T.L.'s testing material, final report dated December 1, 1982, on vehicles #0267 and #2430. Looking at unit #2430, which did not have a spark plug wire failure, on the highway sequence, Optimizer after 1,000 miles at factory specs, showed 5% increase over baseline. With the timing advance there was a 5.2% increase over baseline, and with the Optimizer back to factory specs, the percentage remained at 5.2%. In a previous communication from E.P.A., letter dated June 14, 1983, page 4, item 5, you stated that "forty percent of the overall change occurs with the timing change. Thus the data do not support your statement that the effect of timing change is minimal." Had the spark plug wires not failed on the last sequence, we maintain that the result would have been 6%, duplicating the results on vehicles #2430 where the timing was shown to have little effect.

Page #17, Paragraph "d" - Cost Effectiveness.

Since Optimizer, Ltd will be targeting for sales in the fleet market, your cost effectiveness is not correct. If we assume a cost of $390.00 per unit, a baseline fuel economy of 25 miles per gallon, gasoline costs of $1.40 per gallon, and an annual usage of the vehicle of 50,000 miles, then the payback would be 69,000 miles. Because our tests show that this device should last for 400,000 miles, it is very cost effective.

Page #17 - Conclusions.

In this section, you must insert a statement about the device alone with no timing advance. That statement must reflect that indications with device alone and no timing adjustments show fuel improvement and no emissions elevations.

Furthermore, in your conclusions, as in the summary at the beginning of this evaluation, it must be stated that the device as tested and evaluated is not the device that Optimizer, Ltd will market. A new application on the present device with its modifications is being submitted.

Mr. Korth, if there are any questions on this critique, please contact me. We believe that what we have stated here reflects the true evaluation of the tested Optimizer (not ever to be marketed). Thank you very much for your cooperation and help.

Sincerely,

OPTIMIZER, LTD.

Dr. Leon I. Rosky
President

LIR:va

Enclosure

Optimizer® Ltd

May 2, 1983

118 - Fuel filter off truck #310 from [redacted]

119 - Fuel filter off truck #932 from [redacted]

120 - Quart oil out of [redacted] car.

121 - Fuel filter off [redacted] car.

122 - BAS from combustion chamber. — 8½ -11 ppb pt.

123 - BAS pieces of piston's. —.

124 - BAS of valves. —

125 - BAS pieces of heat riser. —

126 - Fuel Filter Gas 350 Chev 8000 Miles
?

14 ppb/cm²

1½ x 3

A.T.L.

**Research and Control Laboratories, Inc.**

27145 BENNETT ST.
(313) 538-2367 DETROIT, MICH. 48240

Dr. Marvin Weintraub
Innovative Technologies, Inc.
Southfield, MI
Re: Optimizer

July 22, 1983

Dear Sir:

Preliminary results for Tests 122-125 show small amounts of platinum present-(8-10 ppb). These will be repeated after a concentration step and the remaining samples are in process.

J. Runyan
J.T. Runyan

The sample coupons submitted early contained 0.014 mg/cm of Pt.

J.T.R.

Optimizer® Ltd

The main problems in evaluating the Optimizer have been two fold: Firstly, the Optimizer is a new and unique concept in its approach to improving fuel economy -- it functions in an area of unexplored technology. Secondly, and the most important factor is that to properly evaluate the Optimizer, preconceived engineering judgements regarding retrofit fuel savings devices, engine adjustments, and existing test procedures must be disregarded.

The Optimizer functions in part by the dissolution of platinum into the fuel with the subsequent "plating out" of the platinum on to the cylinder walls, valves, heat risers, etc. Thus, it will take a given time frame (e.g. - 1,000 miles for certain vehicles) for the platinum to coat the engine surfaces before observing the full benefit of the Optimizer. Conversely, if the Optimizer is removed from the vehicle after, say 1,000 miles, a fuel economy improvement will still exist until the platinum wears off. A detailed description of the proposed mechanism, along with laboratory data, is attached. It should be noted, however, that the mechanism is extremely complex and not yet fully understood.

## Observations Related to Mechanism

The catalyst employed by Optimizer is stabilized platinum on an aluminium oxide support. As the fuel is passed through the Optimizer, the platinum dissolves at a given rate depending on the temperature of the Optimizer and the type of fuel. At a given temperature, platinum dissolution is greater in gasoline than in diesel fuel, which probably is related to the olefinic concentration differences between the two fuels. Figures 1 and 2 show the dissolution of platinum as a function of temperature in both gasoline and diesel fuel. These curves should be considered to be proprietary.

Our latest test results on a disassembled engine (valve stems, pistons, combustion chamber scrapings, and heat riser) all show a platinum coating in the range of 8 - 11 parts per billion. To confirm this, a bench study was set up to evaluate the platinum coating. A piece of low carbon steel was placed in a glass flask in which low lead gasoline was recycled through the Optimizer for 16 hours. Platinum analysis showed that 280 micrograms were deposited on 20 $cm^2$ of steel and the amount of platinum in the fuel was less than 2 parts per billion. The coating appeared to be uniform over the surface, but was not checked on the S.E.M.

There are indications that there is a low temperature catalytic reaction based upon F.I.A. results with aromatic content changing from 26% to 31% and olefinic content ranging from 10.2 to 9.4%.

The explanation of platinum entering the combustion chamber and initiating combustion at lower temperatures has been shown in the literature (1), and may be applicable to the Optimizer. Another explanation based on our findings is that platinum coats the cylinder wall and combustion chamber over a period of time. The unburned hydrocarbons which accumulate on the cylinder wall are completely oxidized and hydrocracking of the fuel can occur within the combustion chamber.

Continual independent fleet testing shows that vehicles with the Optimizer require much lower maintenance based on decreased down time than similar vehicles without the Optimizer. Therefore, the platinum coating probably serves as a high temperature boundry layer lubricant (2).

## Comments Regarding Emissions

The measure of emissions becomes even more complex since literature on a catalytic engine showed that to obtain stable combustion, a slight increase in timing was necessary at light loads only. The results were that hydrocarbons and carbon monoxide decreased and oxides of nitrogen increased. An increase in timing is not necessary with the Optimizer because as the platinum wears off, it is

replenished and the literature shows that oxides of nitrogen are reduced overall with a platinum catalytic engine. Thus, the test sequence plus the time frames must be considered with the utmost caution in evaluating the Optimizer

REFERENCES:

1. B. E. Engra and D. T. Thompson - Platinum Metals Review, 1979, 23 (4) 134.

2. F. Bowden and D. Tabor - Friction, An introduction to Tribology, Doubleday, New York, New York, 1973.

3. R. H. Thring - The Catalytic Engine, Platinum Metals Review, 1980, 24 (4) 126.

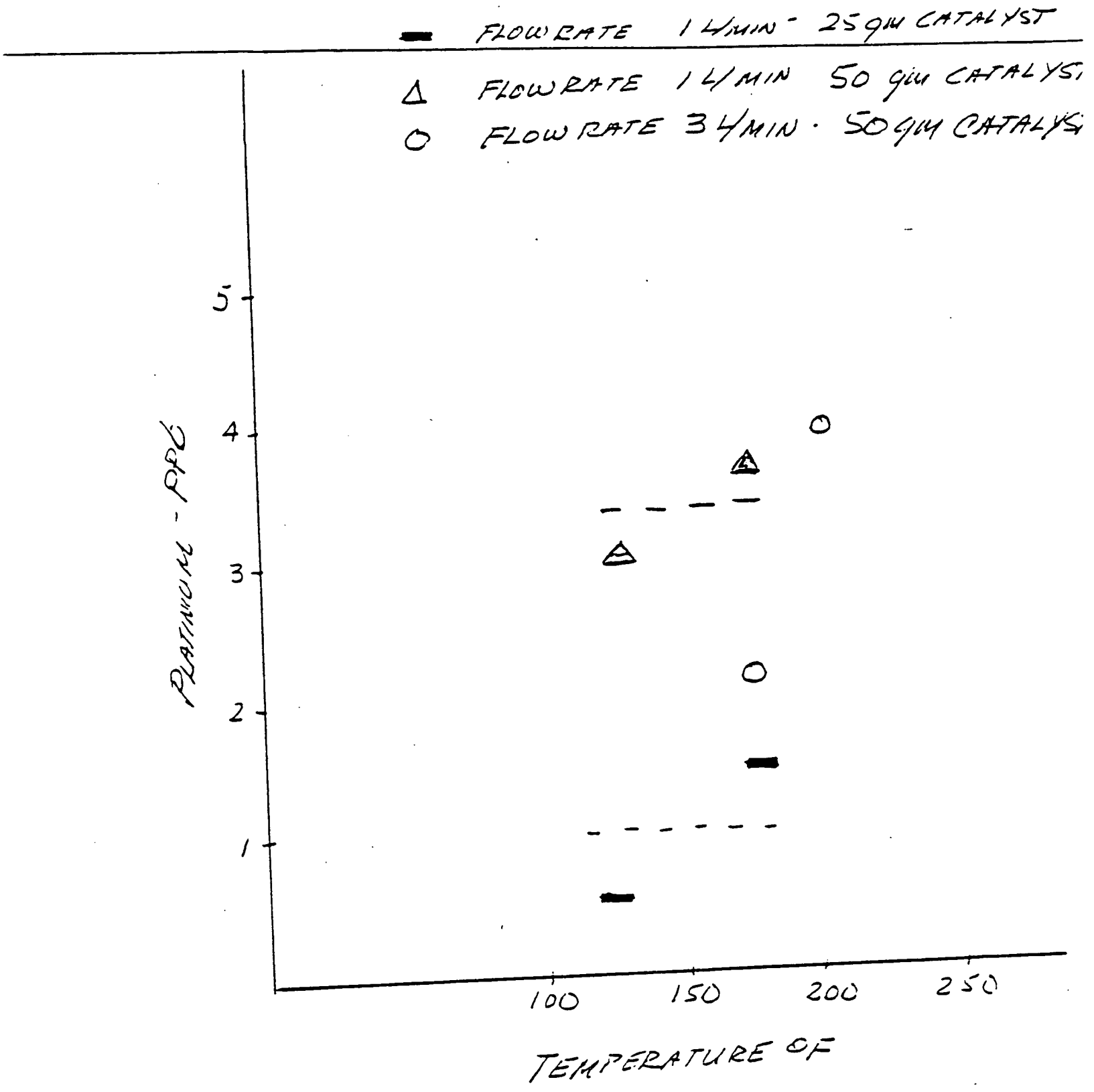


FIGURE 2 PT DISSOLUTION IN DIESEL

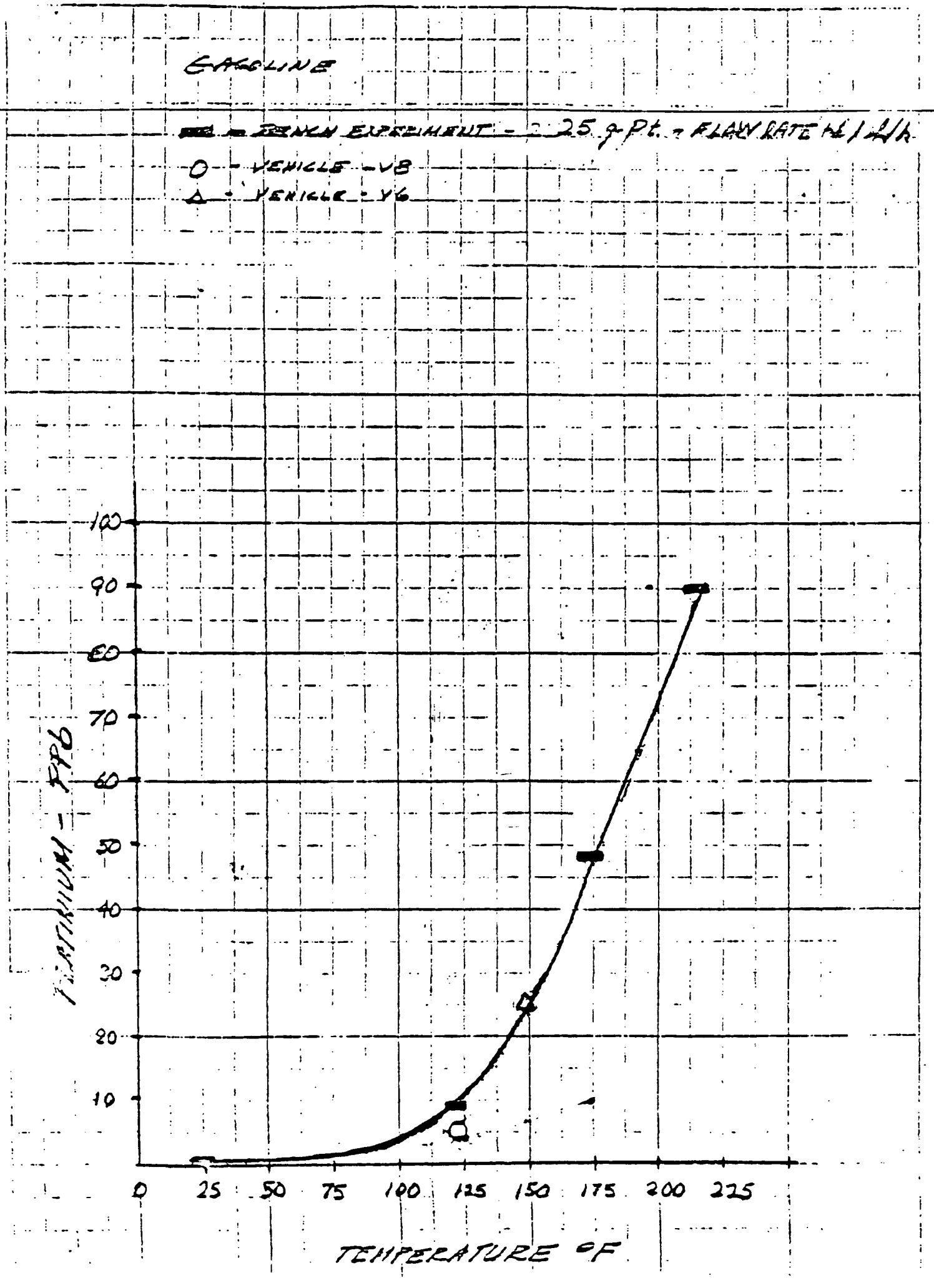
GASOLINE
BENCH EXPERIMENT - 25 g Pt. - FLOW RATE ml/hr
O - VEHICLE - V8
Δ - VEHICLE - V6
PLATINUM - PPB
100
90
80
70
60
50
40
30
20
10
0
25
50
75
100
125
150
175
200
225
TEMPERATURE °F

ATTACHMENT U

UNITED STATES ENVIRONMENTAL PROTECTION AGENCY

ANN ARBOR, MICHIGAN 48105

August 25, 1983

OFFICE OF
AIR, NOISE AND RADIATION

Dr. Leon I. Rosky, President
Optimizer, Ltd.
220 Lynn Street
Flushing, MI 48433

Dear Dr. Rosky:

We received your letter of July 28 in which you raised several issues concerning the EPA evaluation report of the "Optimizer" device. Although most of these items have been discussed in our prior correspondence and meetings, there are a few items that may not have been discussed and others for which our position was possibly not clear.

To make our response clear, we have numbered each paragraph of your letter (copy enclosed) and will respond separately to each one.

1. Paragraph No. 2. Regarding the evaluation, we will take the action indicated in the following paragraphs. The report and summary in the Federal Register will be modified as noted in this letter and then published.

2. Paragraph No. 3. A statement will be added to the Federal Register Notice after the summary that will indicate that the applicant does not intend to market the device evaluated. Also, this addition will indicate that the applicant intends to submit an application for evaluation of their present unit which they do expect to market.

3. Paragraph No. 4. The report did cover the test "... sequences which relate to the baseline, Optimizer unit alone (no timing advances), after 1000 miles run-in." However, they are not addressed in either the Federal Register summary or the evaluation report conclusions since they do not represent the primary test sequences for comparison. Namely, baseline and device installed according to the instructions of the manufacturer (for which the Optimizer includes timing advance). Furthermore, the data in the sequence to which you refer, do not demonstrate that the device, rather than the timing advance, is the principal cause of the changes in emissions or fuel economy. The comment on the effect of timing advance was incorporated in the Federal Register summary and conclusions since the data and literature support this as a principal effect.

4. Paragraph No. 5. The report does not state "... that all fuel economy increases are due to the timing advances and not due to the device itself." The report states that the small increases in fuel economy are due principally to the timing advance rather than the device.

The statement "... that the device alone, without timing advances, will also give fuel economy [benefits]..." is not supported by the data. Although isolated test sequences may show that the device alone, without timing advances, does indicate a fuel economy benefit, the data in attachments C-4 through C-7 do not support the conclusion that the device alone has a fuel economy benefit.

5. Paragraph No. 6. The installation instructions prescribe the timing change. Also you stated that "Our tests show that in order to utilize the improvement in the fuel mixture and obtain complete combustion, a timing advance is necessary."

6. Paragraph No. 7. We agree that the data indicate that platinum is added to the fuel. Also, we did not infer that the platinum in the fuel would not coat engine surfaces. However, as noted in paragraphs no. 3 and 4 on page 9 of the report (Section 6b(2)), there is no evidence that the platinum enhances the combustion process and improves fuel economy. Furthermore, the engine studies referenced that did show a benefit were for completely different engines, e.g., a fuel injected engine with a prechamber, 12 to 1 compression ratio, and a platinum grid in the piston head.

7. Paragraph No. 8. The installation instructions stated that the inline fuel filter was to be changed every 7,000 to 10,000 miles and was not revised in subsequent correspondence.

8. Paragraph No. 9. The description "Optimizer after 500 miles" both on vehicles #7957 and #8982 is correct since, unless noted as an exception, it is presumed to be installed according to the then current instructions of the manufacturer (and it was). The footnote is quite prominent and would be readily noticed by anyone scrutinizing the report. We agree that the labeling of the data in Attachments C-4 thru C-7 could be clearer and therefore we have added additional clarifying footnotes to these four pages. Copies are attached.

9. Paragraph No. 10. You apparently are referring to only the first sentence of the paragraph. The complete statement "Installation of the Optimizer caused large and statistically significant increases in NOx emissions for all vehicles. LA-4 NOx emissions increased for all vehicles. HFET NOx emissions increased for three of the four vehicles. NOx emissions increased an average of 30%" is a true statement. As we discussed in our meetings and in our letter of June 14 the more important comparison is the large change in LA-4 emissions between the baseline and installed device tests (with parameter

adjustments). Also, the data of attachment C-7 are insufficient in themselves to establish that ... "the Optimizer, no timing advance, NOx should be basically at a zero level."

10. Paragraph No. 11. As noted above, we expect the device to cause NOx emissions to increase. The key item for the summary is the change in emissions and fuel economy to be expected when installing the device according to the instructions of the manufacturer (including timing).

11. Paragraph No. 12. As noted in our paragraph No. 4 above, we did "... not state that all the results are due just to the timing advance."

13. Paragraph No. 14. We rechecked our calculations used to calculate the payback period for an assumed improvement in fuel economy by 5%. The correct payback mileage should be 170,000 miles rather than 200,000 miles and the report will be corrected. However, this would still certainly make the device not cost effective for passenger car fleets.

14. Paragraph No. 15. The Federal Register summary and conclusions will be modified as indicated in paragraph No. 2 above.

15. Attachments. Figures 1 and 2 were included as part of a six page attachment to your letter. The text stated that these two figures should be considered to be proprietary. However, the figure showing the temperature versus platinum dissolution rate in gasoline was previously provided as an attachment to your letter of February 8, and it was not claimed to be proprietary at that time. Furthermore, since it was included in the report as Attachment C-1 and you did not take exception to its inclusion, we will assume the data is not proprietary and will include it in the published evaluation.

We believe we have fairly considered and addressed your concerns. The changes we have promised will be incorporated before our report is published. We are looking forward to receiving your new application.

I hope this response has clarified our position. If you have any questions, please contact me.

Sincerely,

Merrill W Korth

Merrill W. Korth
Device Evaluation Coordinator
Test and Evaluation Branch

Enclosure