EPA-450/3-75-029
October 1974

DEVELOPMENT OF INFORMATION FOR STANDARDS OF PERFORMANCE FOR THE FOSSIL FUEL CONVERSION INDUSTRY

U.S. ENVIRONMENTAL PROTECTION AGENCY
Office of Air and Waste Management
Office of Air Quality Planning and Standards
Research Triangle Park, North Carolina 27711

EPA-450/3-75-029

DEVELOPMENT OF INFORMATION FOR STANDARDS OF PERFORMANCE FOR THE FOSSIL FUEL CONVERSION INDUSTRY

by

B. Kim, J.M. Genco,
J. Oxley, and P. Choi

Battelle Columbus Laboratories
505 King Avenue
Columbus, Ohio 43201

Contract No. 68-02-0611
Task 7

EPA Project Officer: William Herring

Prepared for

ENVIRONMENTAL PROTECTION AGENCY
Office of Air and Waste Management
Office of Air Quality Planning and Standards
Research Triangle Park, North Carolina 27711

October 1974

NOTICE

This document includes technical information and recommendations submitted by the Contractor to the United States Environmental Protection Agency (EPA) regarding the subject industry. The report, including the recommendations, will be undergoing extensive review by EPA, Federal and State agencies, public interest organizations, and other interested groups and persons. The report and in particular the Contractor's recommended standards of performance are subject to change in any and all respects. Mention of company or product names is not to be considered as an endorsement by the Environmental Protection Agency.

The regulations to be published by EPA under Section 111 of the Clean Air Act of 1970 will be based to a large extent on the report and the comments received on it. However, EPA will also consider additional pertinent technical and economic information which is developed in the course of review of this report by the public and within EPA. Upon completion of the review process, and prior to final promulgation of regulations, an EPA report will be issued setting forth EPA's conclusions concerning the subject industry and standards of performance for new stationary sources applicable to such industry. Judgments necessary to promulgation of regulations under Section 111 of the Act, of course, remain the responsibility of EPA. Subject to these limitations, EPA is making this report available in order to encourage the widest possible participation of interested persons in the decision-making process at the earliest possible time.

This report shall have standing in any EPA proceeding or court proceeding only to the extent that it represents the views of the Contractor who studied the subject industry and prepared the information and recommendations. It cannot be cited, referenced, or represented in any respect in any such proceedings as a statement of EPA's views regarding the subject industry.

This report is issued by the Environmental Protection Agency to report technical data of interest to a limited number of readers. Copies are available free of charge to Federal employees, current contractors and grantees, and nonprofit organizations - as supplies permit - from the Air Pollution Technical Information Center, Environmental Protection Agency, Research Triangle Park, North Carolina 27711; or, for a fee, from the National Technical Information Service, 5285 Port Royal Road, Springfield, Virginia 22161.

Publication No. EPA-450/3-75-029

TABLE OF CONTENTS

	Page
INTRODUCTION	1
SUMMARY	2
Coal Preparation	2
Fuel Gas Purification	2
Sulfur Recovery	4
Treatment of Claus-Plant Tail Gas	4
Other Sources of Sulfurous Emissions	5
COAL GASIFICATION TECHNOLOGY	6
Classification of Gasification Processes	6
Present Status of Gasification Technology	7
Selection of Coal Gasification Processes	7
Categorization of Gasification Process as Air Pollutant Emission Source	8
DESCRIPTION OF SELECTED COAL GASIFICATION PROCESSES AND EMISSIONS OF SULFUROUS GASES	8
Lurgi Process (High-Btu SNG)	9
Synthane Process	17
Hygas Process (High-Btu SNG)	26
CO_2-Acceptor Process (High-Btu SNG)	44
Lurgi Process (Low-Btu Gas)	57
Koppers-Totzek Process (Low-Btu Gas)	62
SULFUROUS EMISSION CONTROL PROCESSES	73
ACID GAS REMOVAL PROCESSES	75
Physical Solvent Processes	75
Amine Processes	84

TABLE OF CONTENTS (Continued)

	Page
Alkaline Salt Solution Processes	88
Utilities Requirements	92
SULFUR RECOVERY PROCESSES	98
Claus Process	98
Stretford Process	103
Giammarco-Vetrocoke Processes	105
Utilities Requirements	106
TREATMENT OF CLAUS PLANT TAIL GAS	108
Beavon Process	108
Cleanair Process	111
IFP-1 Process	111
SCOT Process	112
Sulfreen Process	114
Wellman-Lord Process	114
Utilities Requirements	114
CONCLUSIONS	118
Coal Preparation	118
Fuel Gas Purification	118
Sulfur Recovery	122
Treatment of Claus Plant Tail Gas	124
Other Sources of Sulfurous Emissions	124
Supplementary Information	126
REFERENCES	127

TABLE OF CONTENTS (Continued)

Page

APPENDIX A

INDUSTRY STRUCTURE A-1

APPENDIX B

INDUSTRY EXPERTS AND POTENTIAL ATTENDANTS FOR INDUSTRYWIDE MEETING B-1

LIST OF TABLES

		Page
Table 1.	Design Basis for Lurgi Process for the Manufactur of High-Btu SNG by El Paso Natural Gas	12
Table 2.	Sulfur Balance Around Rectisol Unit for Desulfurization of High-Btu Gas Stream in Lurgi Process	14
Table 3.	Sulfur Balance Around High-Pressure Stretford Unit for Desulfurization of Low-Btu Gas Stream in Lurgi Process	15
Table 4.	Sulfur Balance Around Low-Pressure Stretford Units for Sulfur Recovery in Lurgi Process	16
Table 5.	Emissions of Sulfur Compounds for Alternative Control Levels in Lurgi Process	18
Table 6.	Design Basis for Synthane Process for the Manufacture of High-Btu SNG	21
Table 7.	Sulfur Balance Around Hot Potassium Carbonate Unit for Desulfurization of Fuel Gas in Synthane Process	23
Table 8.	Sulfur Balance Around Catalyst Guard for Desulfurization of Fuel Gas in Synthane Process	24
Table 9.	Sulfur Balance Around Stretford Unit in Synthane Process	25
Table 10.	Emissions of Sulfur Compounds for Alternative Control Levels in Synthane Process	27
Table 11.	Design Basis for HYGAS Process for the Manufacture of High-Btu SNG	30
Table 12.	Sulfur Balance Around Rectisol Unit for Desulfurization of Fuel Gas in HYGAS Process	31
Table 13.	Sulfur Balance Around Rectisol Unit for Desulfurization of Fuel Gas in HYGAS Process	32
Table 14.	Sulfur Balance Around IGT-Meissner Unit for Desulfurization of Low-Btu Gas in HYGAS Process	34

LIST OF TABLES (Continued)

		Page
Table 15.	Sulfur Balance Around IGT-Meissner Unit for Desulfurization of Low-Btu Gas in HYGAS Process	35
Table 16.	Sulfur Balance Around Claus Unit for Sulfur Recovery in HYGAS Process	37
Table 17.	Sulfur Balance Around Claus Unit for Sulfur Recovery in HYGAS Process	38
Table 18.	Sulfur Balance Around Claus Unit Plus Wellman-Lord Tail Gas Treatment in HYGAS Process	39
Table 19.	Sulfur Balance Around Claus Unit Plus Wellman-Lord Tail Gas Treatment in HYGAS Process	40
Table 20.	Emissions of Sulfur Compounds for Alternative Control Levels in HYGAS Process	42
Table 21.	Emissions of Sulfur Compounds for Alternative Control Levels in HYGAS Process	43
Table 22.	Design Basis for CO_2-Acceptor Process for the Manufacture of High-Btu SNG	47
Table 23.	Sulfur Balance Around Hot Potassium Carbonate Unit in CO_2-Acceptor Process	48
Table 24.	Sulfur Balance Around Ash Treatment Unit in CO_2-Acceptor Process	49
Table 25.	Sulfur Balance Around Catalyst Guard in CO_2-Acceptor Process	50
Table 26.	Sulfur Balance Around Claus Unit in CO_2-Acceptor Process	52
Table 27.	Sulfur Balance Around Claus Unit Plus Beavon Tail Gas Treatment in CO_2-Acceptor Process	53
Table 28.	Sulfur Balance Around Coal Preparation Unit in CO_2-Acceptor Process	54
Table 29.	Emissions of Sulfur Compounds for Alternative Control Levels in CO_2-Acceptor Process	56
Table 30.	Design Basis for Lurgi Process for the Manufacture of Low-Btu Gas by Steam-Air Gasification of Coal	60

LIST OF TABLES (Continued)

		Page
Table 31.	Sulfur Balance Around High Pressure Stretford Unit for Desulfurization of Low-Btu Gas in Lurgi Process	61
Table 32.	Emissions of Sulfur Compounds for Alternative Control Levels in Lurgi Process for Low-Btu Gas Manufacture	63
Table 33.	Design Basis for Koppers-Totzek Process for the Manufacture of Low-Btu Gas by Steam-Oxygen Gasification of Coal	66
Table 34.	Sulfur Balance Around MDEA Unit for Desulfurization of Fuel Gas	68
Table 35.	Sulfur Balance Around Claus Unit in Koppers-Totzek Process	69
Table 36.	Sulfur Balance Around Claus Unit Plus Beavon Unit in Koppers-Totzek Process	70
Table 37.	Emissions of Sulfur Compounds for Alternative Control Levels in Koppers-Totzek Process for Low-Btu Gas Manufacture	72
Table 38.	Physical Solvent Processes for Gas Purification	76
Table 39.	Sulfur Balance Around Selexol Unit for Acid Gas Removel in High-Btu SNG Manufacture	78
Table 40.	Sulfur Balance Around Selexol Unit for Desulfurization of Low-Btu Gas	79
Table 41.	Sulfur Balance Around Rectisol Unit for Desulfurization of Low-Btu Gas	81
Table 42.	Material Balance Around Purisol Process in Selective Removal of H_2S From Natural Gas	82
Table 43.	Amine Processes for Gas Purification	85
Table 44.	Typical Operating Data for Shell ADIP and Sulfinol Processes for Purification of Synthesis Gases	87
Table 45.	Alkaline Salt Solution Processes for Acid Gas Removal	89

LIST OF TABLES (Continued)

		Page
Table 46.	Typical Operating Data for Alkazid Process for Purification of Ammonia Synthesis Gas	94
Table 47.	Typical Operating Data for COS Hydrolysis Process for Purification of Carbon Monoxide from Coke	95
Table 48.	Utilities Requirement for Acid-Gas Removal Processes	96
Table 49.	Utilities Requirement for MDEA Process for Desulfurization of Low-Btu Gas	97
Table 50.	Sulfur Recovery Processes	99
Table 51.	Utilities Requirement for Sulfur Recovery Processes	107
Table 52.	Claus Plant Tail Gas Treatment Processes	109
Table 53.	Sulfur Balance Around a Claus Unit and Around a Claus Unit Plus a Beavon Unit	110
Table 54.	Sulfur Balance Around a Claus Unit and Around a Claus Unit Plus an IFP-1 Unit	113
Table 55.	Sulfur Balance Around a Claus Unit and Around a Claus Unit Plus a Sulfreen Unit	115
Table 56.	Sulfur Balance Around a Claus Unit and Around a Claus Unit Plus a Wellman-Lord Unit	116
Table 57.	Utilities Requirement for Claus Plant Tail Gas Treatment Processes	117
Table 58.	Sulfur Content of CO_2 Streams From Rectisol Process for Gas Purification in SNG Manufacture From Coal Gasification	120
Table 59.	Sulfur Content of Tail Gas From Claus Process	123
Table 60.	Sulfur Content of Off Gases From Claus Plant Tail Gas Treatment Processes	125
Table A-1.	Lurgi Gasification Units	A-2
Table A-2.	Koppers-Totzek Gasification Units	A-4
Table A-3.	Winkler Gasification Units	A-7

LIST OF TABLES (Continued)

Page

Table A-4. Survey of Estimates of Future Supply of Pipeline Quality (High-Btu) Gas Produced from Coal in the United States A-10

Table A-5. Estimate of Future Supply of Low-Energy (Low-Btu) Gas Produced from Coal in the United States A-10

Table B-1. List of Industry Experts B-2

LIST OF FIGURES

Figure 1. Flowsheet of Lurgi Process for SNG Manufacture 10

Figure 2. Flowsheet of Synthane Process for SNG Manufacture . . . 19

Figure 3. Flowsheet of Hygas Process for SNG Manufacture 28

Figure 4. Flowsheet of CO_2-Acceptor Process for SNG Manufacture . 45

Figure 5. Flowsheet of Lurgi Process for Low-Btu gas Manufacture 58

Figure 6. Flowsheet of Koppers-Totzek Process for Low-Btu Gas Manufacture 64

DEVELOPMENT OF INFORMATION FOR STANDARDS OF PERFORMANCE FOR THE FOSSIL FUEL CONVERSION INDUSTRY
(Contract No. 68-02-0611, Task 7)

by

B. C. Kim, J. M. Genco, J. H. Oxley, and P. Choi

INTRODUCTION

This study was performed by Battelle's Columbus Laboratories (BCL) for the Environmental Protection Agency under Contract No. 68-02-0611, Task 7. The objective of this task was to develop background information which will assist the EPA in preparing a standards support document preliminary to setting New Source Performance Standards for the coal gasification industry.

The scope of the present task covered desulfurization of fuel gas produced by coal gasification and control of sulfurous emissions to atmosphere from process sequence in coal gasification. Emissions of sulfur dioxide from on-site utility boilers, burning fuels other than the gaseous fuel produced by an auxiliary coal gasification unit, were excluded from this task, since they were considered to be covered by the existing regulations pertaining to utility boiler operations.

Coal gasification processes considered in this task included four processes for the manufacture of a sustitute natural gas (SNG), including the Lurgi, Synthane, Hygas, and CO_2-Acceptor processes; and two processes for the manufacture of a low-Btu utility gas, including the Lurgi and Koppers-Totzek processes. Control technology was considered under three categories: (1) gas purification for the removal of acid gases such as H_2S and CO_2, and other sulfur compounds, (2) sulfur recovery, and (3) treatment of tail gas from the Claus sulfur-recovery process.

SUMMARY

Sulfurous emissions and applicable control methods in the manufacture of high-Btu SNG and low-Btu fuel gas by coal gasification are summarized below by sources of emissions.

Coal Preparation

For a plant producing 62.5 x 10^9 kcal/day (248 x 10^9 Btu/day) equivalent of SNG from a low-sulfur coal (0.59 percent sulfur) by the CO_2-Acceptor process, the coal preparation stage emits 61 x 10^6 nm^3/day* (2200 x 10^6 scf/day) of an off-gas containing 300 ppm of SO_2. The equivalent sulfur emissions are estimated at 25.0 MT** (22.6 tons) or 0.23 kg S/10^6 kcal (0.13 lb S/10^6 Btu) of SNG produced. Available process design schemes allow discharging the SO_2 from coal preparation directly to atmosphere without control.

Fuel Gas Purification

For SNG manufacture, the fuel gas usually following the shift reaction is purified to remove sulfur compounds and CO_2 prior to methanation. Sulfur compounds and CO_2 can be removed separately or together. Processes generally considered capable of separate removal of sulfur compounds and CO_2 include the Rectisol, the Selexol, the Purisol, and the Alkazid processes. Separate removal of acid gases produces two effluent streams, one containing the bulk of the sulfur compounds originally present in the gas feed and the other containing CO_2 and traces of sulfur compounds. The sulfur-rich stream is sent to a subsequent sulfur-recovery process for desulfurization and, therefore, is not usually considered an emission source at the gas purification stage. The CO_2 stream from the Rectisol process contains 50 to 80 ppm of total sulfur compounds (mostly as COS) for low-sulfur coals (0.51 to 0.91 percent sulfur) and 310 ppm of total sulfur compounds for a high-sulfur coal (3.93 percent sulfur).

---

* nm^3 stands for cubic meters at 15.6 C, 1 atm.

** MT stands for metric ton.

The flow rate of the CO_2 stream is in the range of about 6.0 to 10.9 x 10^6 nm^3/day (200 x 10^6 to 400 x 10^6 scf/day). Equivalent sulfur emissions in the CO_2 stream are about 0.5 to 1.3 MT S/day (0.5 to 1.4 tons S/day) or 0.009 to 0.02 kg S/10^6 kcal (0.005 to 0.01 lb S/10^6 Btu) for low-sulfur coals and 2.8 MT S/day (3.1 tons S/day) or 0.045 kg S/10^6 kcal (0.025 lb S/10^6 Btu) for the high-sulfur coal. Available process design schemes are based on venting the CO_2 stream directly to atmosphere. When CO_2 is removed together with sulfur compounds, a single off-gas stream containing the bulk of both constituents is generated from the purification stage. Processes generally considered applicable for simultaneous removal of acid gases include the hot potassium carbonate, the Sulfinol, and the Fluor Solvent processes. Available process design schemes require treating the acid gas effluent for desulfurization.

In the manufacture of a low-Btu utility gas, sour fuel gas produced by coal gasification is desulfurized for the purpose of reducing SO_2 emissions from combustion of the fuel gas in a utility boiler. Commercially-proven processes applicable for desulfurization include the Stretford process and an amine-absorption process using methyldiethanolamine (MDEA). Both processes are intended for selective removal of H_2S while leaving behind bulk of CO_2 in the fuel gas. For plants producing 32.8 x 10^9 kcal/day (130 x 10^9 Btu/day) equivalent of low-Btu gas from coals containing 0.69 to 1.08 percent sulfur, the sour fuel gas can be desulfurized to a total residual sulfur level in the range of 140 to 250 ppm. Equivalent sulfur emissions from combustion of the fuel gas in a utility boiler are 24 to 70 ppm SO_2 in boiler stack or 0.22 to 0.27 kg $SO_2/10^6$ kcal (0.12 to 0.15 lb $SO_2/10^6$ Btu) of fuel gas product.* The latter emission values are substantially below the existing Federal standards for SO_2 emissions established at 2.16 kg $SO_2/10^6$ kcal (1.2 lb $SO_2/10^6$ Btu) for coal-burning equipment. To comply with the existing standards, the allowable total sulfur levels in fuel gas are estimated at 1400 ppm for a fuel gas with a heating value of 1740 kcal/nm^3 (195 Btu/scf) (produced by the Lurgi steam-air

---

* The indicated ranges of the three sets of figures were derived from different sources of data and consequently do not necessarily agree.

gasification process) and at 2100 ppm for a fuel gas with a heating value of 2167 kcal/nm^3 (294 Btu/scf) (produced by the Koppers-Totzek steam-oxygen gasification process).

Sulfur Recovery

Acid gases generated from fuel-gas purification will be sent to either the Claus process or the Stretford process for desulfurization and sulfur recovery. The Claus process produces a tail gas containing sulfur as SO_2 in the range of 1 to 2 percent after incineration. Equivalent sulfur emissions range from 4.3 to 45 MT/day (5 to 50 tons S/day) or 0.1 to 0.7 kg S/10^6 kcal (0.07 to 0.4 lb S/10^6 Btu) equivalent of SNG or low-Btu gas produced. The concentration of SO_2 in the tail gas is high enough to allow further treatment of the tail gas prior to discharge to atmosphere. The Stretford process produces effluents containing sulfur as SO_2 in the range of 150 to 420 ppm after incineration in the manufacture of SNG from coals containing 0.69 to 1.6 percent sulfur. Equivalent sulfur emissions are estimated in the range of 0.3 to 1.3 MT S/day (0.3 to 1.4 tons S/day) or 0.004 to 0.022 kg S/10^6 kcal (0.0022 to 0.012 lb S/10^6 Btu) equivalent of SNG produced. Available process design schemes are based on discharging the Stretford effluents directly to atmosphere without further treatment.

Treatment of Claus-Plant Tail Gas

Commercially-proven control methods for desulfurization of Claus-plant tail gas include the Beavon, the Cleanair, the IFP-1, the Sulfreen, and the Wellman-Lord processes.

The Beavon, the Cleanair, and the Wellman-Lord processes are considered capable of reducing sulfur content of Claus-plant tail gas to 250 ppm SO_2 in the effluent discharged to atmosphere. Equivalent sulfur emissions in the treated effluents are estimated at 0.7 to 0.9 MT S/day (0.8 to 1.0 tons S/day) or 0.012 to 0.015 kg S/10^6 kcal (0.007 to 0.008 lb S/10^6 Btu) in the manufacture of SNG from a high-sulfur coal (3.93 percent sulfur) and 0.2 to 0.6 MT S/day (0.2 to 0.7 tons S/day) or 0.003 to 0.010 kg

$S/10^6$ kcal (0.002 to 0.006 lb $S/10^6$ Btu) in the manufacture of SNG from low-sulfur coals (0.51 to 0.59 percent sulfur). Sulfur emissions from the Beavon process employed in the manufacture of a low-Btu gas from a 1.08 percent sulfur coal are estimated at 0.09 MT S/day (0.1 ton S/day) or 0.003 kg $S/10^6$ kcal (0.002 lb $S/10^6$ Btu) equivalent of gas produced.

The IFP-1 and the Sulfreen processes are considered less efficient than the other three processes and are capable of reducing sulfur content of Claus-plant tail gas to about 2000 to 4000 ppm in the effluent discharged to atmosphere. Equivalent sulfur emissions in the treated effluents are estimated at 7 to 13 MT S/day (8 to 14 tons S/day) or 0.1 to 0.2 kg $S/10^6$ kcal (0.06 to 0.11 lb $S/10^6$ Btu) in the manufacture of SNG from a high-sulfur coal (3.93 percent sulfur).

Other Sources of Sulfurous Emissions

Additional sources of sulfurous emissions include off-gases from sour wastewater treatment and from regeneration of catalyst guard, the latter employed ahead of methanation in SNG manufacture.

Off-gases from wastewater treatment are generated at relatively small quantities in the range of 28 to 4500 nm^3/hr (0.001 x 10^6 to 0.16 x 10^6 scf/hr) for SNG plants with a 63 x 10^9 kcal/day (250 x 10^9 Btu/day) capacity and 740 nm^3/hr (0.026 x 10^6 scf/hr) for a low-Btu gas plant with a 32.8 x 10^9 kcal/day (130 x 10^9 Btu/day) capacity. The off-gases, however, contain 2 to 4 percent H_2S and cannot be discharged to atmosphere directly without treatment. Available process design schemes specify sending the off-gases to a sulfur recovery process for desulfurization together with acid gases removed from fuel-gas purification.

Use of a catalyst guard is specified for the Synthane, the CO_2-Acceptor, and the Hygas processes for SNG manufacture. Sulfur emissions as SO_2 from regeneration of catalyst guard are estimated to be low in the neighborhood of 0.5 to 1.1 MT S/day (0.5 to 1.2 tons S/day) or 0.008 to 0.021 kg $S/10^6$ kcal (0.004 to 0.011 lb $S/10^6$ Btu). Available process design schemes allow discharging the off-gas from catalyst regeneration directly to atmosphere without treatment.

COAL GASIFICATION TECHNOLOGY

Gasification of coal is intended to produce gaseous products for consumption as fuels and for industrial uses such as chemical synthesis and a reducing gas in iron and steel production. The technology has been practiced in a commercial scale primarily in Europe for many years to manufacture town gas, fuel gas, and synthesis gas.

Gasification is accomplished by reacting coal with air, with oxygen, with steam and air, or with steam and oxygen to produce a gaseous product, which consists of hydrogen, carbon monoxide, carbon dioxide, hydrocarbons (mainly methane), water, nitrogen (with air-supported combustion), and sulfur compounds (mainly hydrogen sulfice, carbon disulfide, and carbonyl sulfide). The raw gas from the gasifier can be purified to remove particulate matter, excess water vapor, and sulfur compounds to yield a clean product suitable for use as a fuel gas. The heating value of this product typically lies in the range of 890 to 4450 kcal/nm^3 (100 to 500 Btu/scf). The fuel value can be upgraded considerably by subsequent processing of the gasifier product usually by water-gas shift reaction and methanation to produce a substitute natural gas (SNG) of a pipeline quality.

Classification of Gasification Processes

Gasification processes have been classified into two broad categories, low-Btu process and high-Btu process, depending upon the heating value of the product. Low-Btu fuel gas is produced by the initial gasification step. The heating value of low-Btu gas lies typically in the range of 890 to 2670 kcal/nm^3 (100 to 300 Btu/scf) with air-supported operations and in the range of 2670 to 4450 kcal/nm^3 (300 to 500 Btu/scf) with oxygen-supported operations[1].

High-Btu SNG is produced by further processing of the gasifier effluent by water-gas shift reaction and methanation. Substitute natural gas typically contains over 95 percent methane and has a heating value in excess of 8455 kcal/nm^3 (950 Btu/scf).

Present Status of Gasification Technology

A recent survey of the gasification processes for manufacturing gaseous fuels lists a total of 39 processes, of which 21 are for low-Btu fuel gas and 18 are for SNG, in various stages of development and commercial usage[2]. Only three processes, Lurgi, Winkler, and Koppers-Totzek processes, are practiced in commercial scale outside the United States for manufacturing low-Btu gas. The high-Btu processes in an advanced stage of development include: Lurgi process, Synthane process, Hygas process, and CO_2-Acceptor process[3]. The Lurgi process is commercially proven for high-Btu SNG except for methanation. Methanation in conjunction with the Lurgi process is currently undergoing a full-scale evaluation at Westfield, Scotland. As presently scheduled, the Lurgi process will be the first to be used in commercial scale in the United States for SNG manufacture. Applications for two SNG plants based on the Lurgi technology have been filed with the Federal Power Commission by El Paso Natural Gas Company and by Western Gasification Company (WESCO).*

Selection of Coal Gasification Processes

Gasification processes for the present task were selected mainly on the basis of (1) the availability of emission data and (2) the current status of technology with respect to the potential for commercialization in the United States. Using these criteria, Battelle was asked to study the following processes:

High-Btu SNG	Low-Btu Fuel Gas
(1) Lurgi	(1) Lurgi
(2) Synthane	(2) Koppers-Totzek
(3) Hygas	
(4) CO_2-Acceptor	

---

* A joint venture of Texas Eastern Transmission Corporation and Pacific Lighting Corporation.

The four processes listed under the SNG category had been included in a recent Booz-Allen study[3] as being among the most commercially viable and providing a good coverage of all of the major elements of gasification technology and pollution control problems anticipated. The two processes selected for the low-Btu fuel gas are commercially practiced outside the United States and among the best known and most advanced processes.

Categorization of Gasification Process as Air Pollutant Emission Source

By definition given in the Clean Air Act of 1970, Section 111, coal gasification processes will fall into a new source category, since the construction of the first SNG plants is not expected to commence until after the regulations on performance standards are proposed. The source category at this time can be further narrowed down to new construction only and exclude process or equipment modification, since the latter cannot be defined until the plants are constructed and operated.

DESCRIPTION OF SELECTED COAL GASIFICATION PROCESSES AND EMISSIONS OF SULFUROUS GASES

A brief description is presented in this section for the selected coal gasification processes and emissions of sulfurous gases. Emissions are described in terms of source, type, concentration, and quantity. The description given is keyed to simplified flowsheets. Emissions of sulfur dioxide from on-site steam/power plants are not included, since they are considered outside the scope of this task. Desulfurization of fuel gas is included in the discussion for both the low-Btu gas and high-Btu gas processes, although for the latter process desulfurization is not normally considered either a source of sulfurous emissions or an associated emission control process. The reason is that the desulfurization of fuel gas accomplished in the acid-gas removal step in the manufacture of high-Btu gas is an integral part of the manufacturing process required to protect the methana-

tion catalyst regardless of the requirement for the control of sulfurous emissions. Treatment of sulfurous gases regenerated from the desulfurization step is a legitimate emission control item. For the low-Btu processes, however, desulfurization of the fuel gas can be logically considered a sulfur control method, since the fuel gas conceivably could be burned without desulfurization and the resultant sulfur dioxide emissions could be controlled by stack-gas cleaning.

Lurgi Process (High-Btu SNG)

The Lurgi process as proposed by El Paso Natural Gas Company for the manufacture of high-Btu SNG is shown schematically in Figure 1. The flowsheet and material-balance data, including emission data, are based on the information developed in the recent Booz-Allen study[3]. An important feature of this particular plant design is the use of auxiliary air-blown gasifiers for the manufacture of a low-Btu fuel gas which is used for on-site power and steam generation. About 18 percent of the total coal feed is consumed in the auxiliary gasifiers, and the remaining 82 percent in the oxygen-steam gasification for the manufacture of high-Btu SNG. The basis for plant design is summarized in Table 1.

Fuel Gas Desulfurization

The fuel gas produced from steam-oxygen gasification is desulfurized by the Rectisol process. The fuel gas produced from the air-blown gasification is desulfurized by utilizing a high-pressure Stretford process.

Referring to the flowsheet given in Figure 1, the fuel gas feed (Stream 1) to the Rectisol process contains 0.34 percent by volume (dry-gas basis) of H_2S, COS, and CS_2 combined. The removal of the sulfurous compounds in the Rectisol process is nearly complete, producing an essentially suflur-free fuel gas for the subsequent methanation step.

The regenerated acid gases from the Rectisol unit consists of two separate streams, one rich in H_2S (Stream 4) and the other lean in H_2S (Stream 12). These two streams are processed by two separate low-pressure

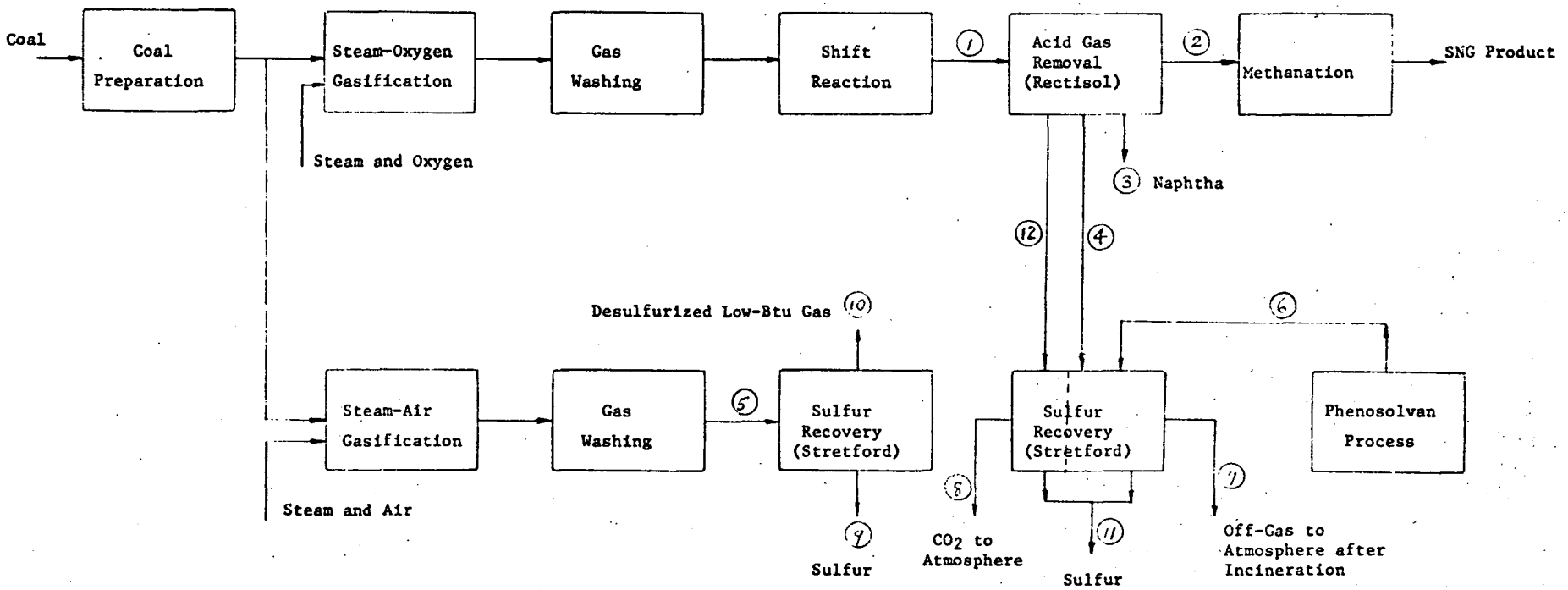

FIGURE 1. FLOWSHEET OF LURGI PROCESS FOR SNG MANUFACTURE[3]

Legend for Figure 1

Stream Number	Description
1	Converted fuel gas feed to Rectisol unit for acid gas removal
2	Purified fuel gas from Rectisol unit
3	Naphtha recovered from Rectisol unit
4	Regenerated acid gas (H_2S-rich stream from Rectisol unit
5	Low-Btu gas to high-pressure Stretford unit for desulfurization and sulfur recovery
6	Waste gas from Phenosolvan unit
7	Tail gas from low-pressure Stretford unit, resulting from treatment of sulfur-rich acid gas and the waste gas from ammonia recovery, discharged to atmosphere after incineration
8	Tail gas from low-pressure Stretford unit, resulting from treatment of sulfur-lean acid gas, discharged to atmosphere without incineration
9	Elemental sulfur recovered from high-pressure Stretford unit
10	Desulfurized low-Btu gas for use at on-site power/steam generation
11	Elemental sulfur recovered from low-pressure Stretford units
12	Regenerated acid gas (H_2S-lean stream) from Rectisol unit

TABLE 1. DESIGN BASIS FOR LURGI PROCESS FOR THE MANUFACTURE OF HIGH-BTU SNG BY EL PASO NATURAL GAS[3]

Coal Feed	
Type	Navajo Seam
Heating value, kcal/kg	4817
Sulfur content, percent by weight	0.69
Feed rate, MT/day	25,622
Gas Production	
Production rate, nm^3/day[a]	8.17×10^6
Heating value, kcal/nm^3[a]	8491
Total fuel value, kcal/day	69.3×10^9
Thermal Efficiency,[b] percent	56.25

(a) Standard conditions are 15.6 C, 1 atm.

(b) Defined as the percentage of the total heating value of the coal feed recovered in the high-Btu SNG product.

Stretford units. The H_2S-rich stream contains about 13 percent by volume of sulfurous gases.

A part of the sulfur compounds leaves the Rectisol process with naphtha (Stream 3) recovered from the Rectisol process. A sulfur balance around the Rectisol process is given in Table 2.

The low-Btu gas produced from air-blown gasification is desulfurized by a high-pressure Stretford unit operated at 18 atm. (250 psig). A sulfur balance around the high-pressure Stretford unit is given in Table 3.

Sulfur Recovery

Gaseous streams containing sulfurous compounds are treated by three Stretford units to recover elemental sulfur. One unit operated at high pressure is used for the desulfurization of low-Btu gas as described in the preceding section. The other two units are operated at low pressure to treat regenerated acid gas streams (Stream 4) from the Rectisol unit and a waste gas stream (Stream 6) generated from phenol and ammonia recovery by the Phenosolvan process. Output from the low-pressure Stretford units consist of (1) a tail gas (Stream 8) resulting from the treatment of the sulfur-lean acid gas, which is vented directly to atmosphere, (2) a tail gas (Stream 7) resulting from treatment of the sulfur-rich acid gas and the waste gas (Stream 6) from the Phenosolvan process, which is subsequently treated by incineration, and (3) elemental sulfur recovered (Stream 11). Sulfur balance around the low-pressure Stretford units is given in Table 4.

Emissions and Control of Sulfurous Gases

Emissions of sulfurous gases to the atmosphere can be considered at several levels of control up to the fully controlled level which is indicated in the process flowsheet. Two alternatives for the control of sulfurous emissions can be considered as follows:

TABLE 2. SULFUR BALANCE AROUND RECITISOL UNIT FOR DESULFURIZATION OF HIGH-BTU GAS STREAM IN LURGI PROCESS[3]

Basis: 69.3×10^9 kcal/day SNG Production from Navajo Seam Coal (0.69 percent sulfur)

	Streams				
	1	2	3	4	12
	Fuel Gas In	Fuel Gas Out	Naphtha Out	Acid Gas Out	Acid Gas Out
Total Gas Flow					
10^6 nm^3/hr (dry basis)	1.273	0.867	(a)	0.0102	0.404
Sulfurous Gases, volume percent					
H_2S	0.34	trace	--	12.9	0.73
COS		trace	--		
CS_2		trace	--		
Sulfur in stream					
kg/hr	5,850	negligible	18	1,780	3,990
kg/10^6 kcal[b]	2.0	negligible	0.0062	0.61	1.4

(a) Total output = 9,070 kg/hr.

(b) Based on the total HHV of SNG product.

TABLE 3. SULFUR BALANCE AROUND HIGH-PRESSURE STRETFORD UNIT FOR DESULFURIZATION OF LOW-BTU GAS STREAM IN LURGI PROCESS[3]

Basis: 69.3×10^9 kcal/day SNG Production From Navajo Seam Coal (0.69 percent sulfur)

	Streams		
	5	10	9
	Fuel Gas In	Fuel Gas Out	Elemental Sulfur Out
Total Gas Flow			
10^6 nm^3/hr (dry basis)	0.399	0.398	--
Sulfurous Gases, volume percent			
H_2S	0.227	trace	--
COS	0.003	0.01	--
CS_2	trace	trace	--
Sulfur in Stream			
kg/hr	1,240	70	1,180[a]
kg/10^6 kcal[b]	0.43	0.024	--

(a) By difference.

(b) Based on total HHV of SNG product.

TABLE 4. SULFUR BALANCE AROUND LOW-PRESSURE STRETFORD UNITS FOR SULFUR RECOVERY IN LURGI PROCESS[3]

Basis: 69.3×10^9 kcal/day SNG Production from Navajo Seam Coal (0.69 percent sulfur)

	Streams					
	4	12	6	7	8	11
	Acid Gas In	Acid Gas In	Waste Gas from Phenosolvan	Off Gas to Atmosphere after Incineration	Off Gas to Atmosphere	Elemental Sulfur
Total Gas Flow						
10^6 nm^3/hr (dry basis)	0.0102	0.404	0.0021	0.020	0.456	--
Sulfurous Gases, volume percent						
H_2S	H_2S + COS	H_2S + COS	4.09	trace	H_2S + COS	--
COS	+CS_2 = 12.9	+CS_2 = 0.73	trace	trace	+ CS_2	--
CS_2			trace	trace	=80 ppm	--
SO_2	trace	trace	trace	420 ppm	trace	--
Sulfur in Stream						
kg/hr	1,780	3,990	118	12	49	5,830[a]
kg/10^6 kcal[b]	0.61	1.4	0.041	0.0042	0.017	--

(a) By difference.

(b) Based on the total HHV of SNG product.

(1) No control - Neither sulfur recovery nor tail gas treatment will be included. Sulfurous emissions will consist of: (a) acid gases (two streams) from Rectisol unit, (b) waste gas from the Phenosolvan process, and (c) sulfur compounds in the undesulfurized low-Btu gas, which will be emitted as SO_2 from the on-site steam/power plant.

(2) Sulfur recovery - The three Stretford units, one high-pressure and two low-pressure units, will be included, but the Stretford tail gas will not be treated. Sources of sulfurous emissions will include: (a) a low-sulfur and a high-sulfur tail gas stream from the Stretford units and (b) the residual sulfur compounds in desulfurized low-Btu fuel gas.

Emissions of sulfurous gases for the two control alternatives as described above are summarized in Table 5.

Synthane Process

The Synthane process for the manufacture of high-Btu SNG is shown by a block diagram in Figure 2. The flowsheet and material balance data, including sulfurous emissions, are based on the information developed in the recent Booz-Allen study[3]. The process has been under development by the U.S. Bureau of Mines for the conversion of bituminous and subbituminous coal and lignite into high-Btu SNG. The basis for plant design as reported in the Booz-Allen study is given in Table 6.

Fuel-Gas Desulfurization

The fuel gas following shift conversion is purified by a hot potassium carbonate process. The fuel-gas effluent from the potassium-carbonate process is further purified by a catalyst guard, utilizing iron oxide and char as sorbents for sulfur compounds, prior to methanation.

TABLE 5. EMISSIONS OF SULFUR COMPOUNDS FOR ALTERNATIVE CONTROL LEVELS IN LURGI PROCESS[3]

Basis: 69.3 x 10^9 kcal/day SNG Production from Navajo Seam Coal
(0.69 percent coal)

Control Level	Sources of Emissions to Atmosphere						
	Stream 4	Stream 12	Stream 5	Stream 6	Stream 7	Stream 8	Stream 10
	Acid Gases from Rectisol	Acid Gases from Rectisol	Undesulfurized Low-Btu Gas[a]	Off-Gas from Phenosolvan	Off-Gas from Low-Pressure Stretford[b]	Off-Gas from Low-Pressure Stretford	Desulfurized Low-Btu Gas[a]
No Control							
Sulfur compounds, ppm							
H_2S	129,000	7,300	--	40,090	--	--	--
COS			--	--	--	--	--
CS_2			--	--	--	--	--
SO_2	--	--	346	--	--	--	--
Total sulfur, MT/day	43	96	30	2.8	--	--	--
Sulfur Recovery (Stretford)							
Sulfur compounds, ppm							
H_2S	--	--	--	--	--	80	--
COS	--	--	--	--	--		--
CS_2	--	--	--	--	--		--
SO_2	--	--	--	--	420	--	22
Total sulfur, MT/day	--	--	--	--	0.29	1.2	1.7

(a) SO_2 emission from combustion of the low-Btu gas in on-site steam/power plant.

(b) After incineration.

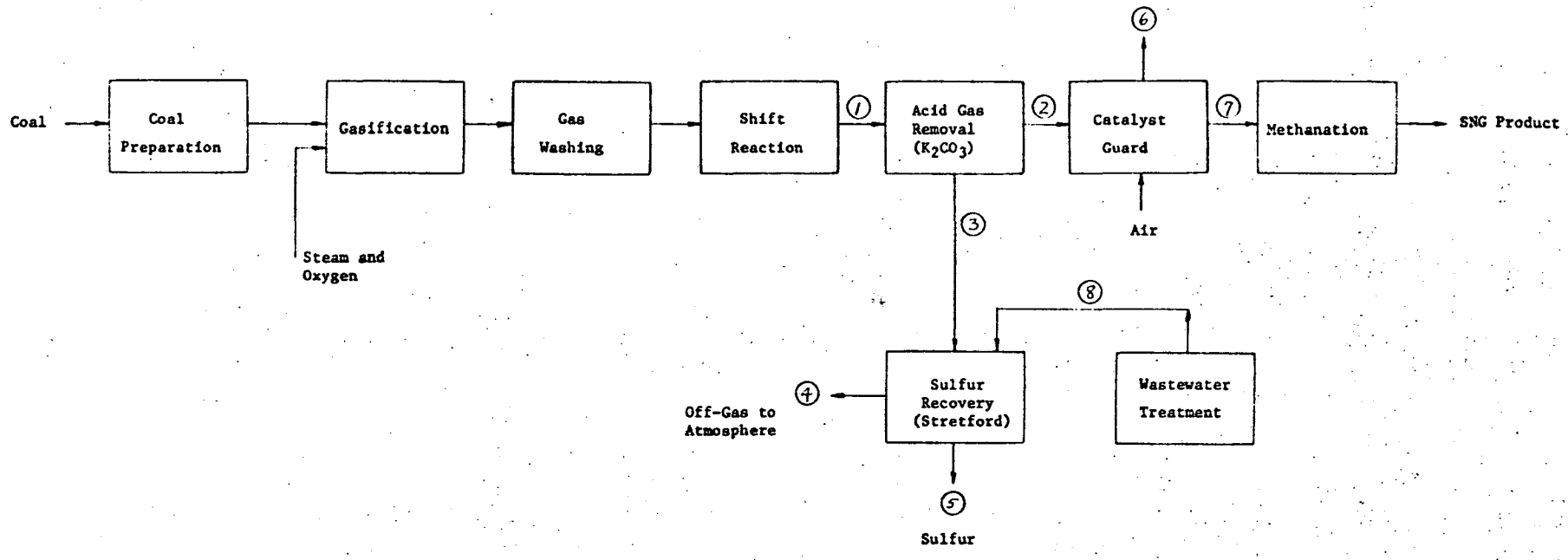

FIGURE 2. FLOWSHEET OF SYNTHANE PROCESS FOR SNG MANUFACTURE[3]

Legend for Figure 2

Stream Number	Description
1	Converted fuel gas feed to hot potassium carbonate unit for acid gas removal
2	Fuel gas output from hot potassium carbonate unit
3	Regenerated acid gas from hot potassium carbonate unit to Stretford sulfur recovery unit
4	Off gas from Stretford unit discharged to atmosphere
5	Elemental sulfur recovered from Stretford unit
6	Off gas from catalyst guard regeneration discharged to atmosphere
7	Purified fuel gas from catalyst guard to methanation
8	Waste gas from wastewater treatment to Stretford unit

TABLE 6. DESIGN BASIS FOR SYNTHANE PROCESS FOR THE MANUFACTURE OF HIGH-BTU SNG[3]

Coal Feed	
Type	Pittsburgh Seam
Heating value, kcal/kg	7,061
Sulfur content, percent by weight	1.6
Feed rate, MT/day	12,925
Gas Production	
Production rate, nm^3/day[a]	7.07×10^6
Heating value, kcal/nm^3[a]	8,250
Total fuel value, kcal/day	58.4×10^9
Thermal Efficiency, percent[b]	64.0

(a) Standard conditions are 15.6 C, 1 atm.

(b) Defined as the percentage of the total heating value of the coal feed recovered in the high-Btu SNG product.

The regenerated acid gases, consisting mostly of carbon dioxide and hydrogen sulfide, are sent to a Stretford unit for sulfur recovery. Sulfur dioxide evolved from regeneration of the catalyst guard is discharged directly to atmosphere. Sulfur balances around the hot potassium carbonate process and the catalyst guard are given in Tables 7 and 8, respectively.

Concentrations of sulfur compounds other than H_2S in the fuel gas input to the hot carbonate absorption stage are unavailable. Carbonyl sulfide and CS_2 are hydrolyzed and converted to H_2S in the absorption stage. Consequently, the fuel gas output and the acid gas regenerated from the absorption stage would be expected to contain little COS and CS_2.

Sulfur Recovery

Acid gases regenerated from the hot carbonate process are treated by a Stretford unit to recover sulfur. The Stretford unit also is designed to treat sour gas generated from wastewater treatment. The treated gas from the Stretford unit is discharged after incineration to atmosphere. Sulfur balance around the Stretford unit is given in Table 9.

Emissions and Control of Sulfur Compounds

Two alternatives can be considered for the control of sulfurous emissions as follows.

(1) No control - The Stretford sulfur recovery unit will not be used. Sulfurous emissions will consist of: (1) regenerated acid gas stream from the hot carbonate absorption stage, (2) the off gas from catalyst guard regeneration, and (3) sour gas generated from wastewater treatment.

(2) Sulfur recovery - The Stretford unit will be incorporated to treat the regenerated acid gas stream from the absorption stage and the sour gas from wastewater treatment. Sulfurous emissions will include: (1) off gas from the Stretford unit and (2) the off gas from catalyst guard regeneration.

TABLE 7. SULFUR BALANCE AROUND HOT POTASSIUM CARBONATE UNIT FOR DESULFURIZATION OF FUEL GAS IN SYNTHANE PROCESS

Basis: 58.4×10^9 kcal/day SNG production from Pittsburgh Seam Coal (1.6 percent sulfur)

	Streams		
	1	2	3
	Fuel Gas In	Fuel Gas Out	Acid Gases Out
Total Gas Flow			
10^6 nm^3/hr	0.854	0.537	0.262
Sulfurous Gases, volume percent			
H_2S	0.4	64 ppm	1.5
COS	NA [a]	trace	trace
CS_2	NA [a]	trace	trace
Sulfur in Stream			
kg/hr	4,630	4.7	5,330
kg/10^6 kcal [b]	1.9	0.019	2.2

(a) Not available.

(b) Based on the total HHV of SNG Product.

TABLE 8. SULFUR BALANCE AROUND CATALYST GUARD FOR DESULFURIZATION OF FUEL GAS IN SYNTHANE PROCESS[3]

Basis: 58.4×10^9 kcal/day SNG production from Pittsburgh Seam Coal (1.6 percent sulfur)

	Streams		
	2	7	6
	Fuel Gas In	Fuel Gas Out	Off Gas from Catalyst Guard Regeneration
Total Gas Flow			
10^6 nm^3/hr	0.537	0.537	NA
Sulfurous Gases, volume percent			
H_2S	64 ppm	trace	trace
COS	trace	trace	trace
CS_2	trace	trace	trace
SO_2	--	--	NA
Sulfur in Stream			
kg/hr	47	negligible	47
kg/10^6 kcal[a]	0.019	negligible	0.019

(a) Based on the total HHV of SNG product.

TABLE 9. SULFUR BALANCE AROUND STRETFORD UNIT IN SYNTHANE PROCESS[3]

Basis: 58.4×10^9 kcal/day SNG production from Pittsburgh Seam Coal (1.6 percent sulfur)

	Streams			
	3	8	4	5
	Acid Gases In	Waste Gas From Wastewater Treatment	Off Gas to Atmosphere After Incineration	Sulfur Recovered
Total Gas Flow, 10^6 nm^3/hr	0.262	0.00416	0.269	--
Sulfurous Gases, vol. percent				
H_2S	1.5	4.5	trace	--
COS	trace	trace	trace	--
CS_2	trace	trace	trace	--
SO_2	trace	trace	150 ppm	--
Sulfur in Stream				
kg/hr	5,330	250	54	5,530
kg/10^6 Btu[a]	2.2	0.10	0.022	--

(a) Based on total HHV of SNG product.

Emissions of sulfur compounds into the atmosphere for the two control alternatives as described above are summarized in Table 10.

Hygas Process (High-Btu SNG)

The Hygas process is one of the advanced systems currently under development by the Institute of Gas Technology with support from the American Gas Association and the Office of Coal Research. A flowsheet of the process is shown in Figure 3. An important feature of the process as displayed in the flowsheet is the incorporation of the U-Gas process, also developed by IGT, for the manufacture of a low-Btu gas by steam-air gasification of coal for use as a fuel for on-site generation of power and steam. About 23 percent of the total coal feed is consumed in the U-Gas process for the production of a low-Btu gas and the remainder in the hydrogasification process for the manufacture of a high-Btu SNG.

The process flowsheet and material-balance data, including emissions of sulfur compounds, are based on the information developed in the recent Booz-Allen study[3]. The basis for process design utilizing two types of coal--Montana Subbituminous and Illinois No. 6-- is given in Table 11.

Fuel Gas Desulfurization

The fuel gas (Stream 1) produced from the hydrogasification process is desulfurized by the Rectisol process and further purified by a catalyst guard prior to methanation. The low-Btu gas (Stream 7) produced from the U-Gas process is desulfurized by the IGT-Meissner process, which is a proprietary high-temperature process currently under development by IGT.

Regeneration of solvent in the Rectisol unit produces a sulfur-rich gas (Stream 3), a sulfur-lean gas (Stream 4), and a BTX-oil liquid (Stream 5). The sulfur-rich gas stream is diverted to a Claus sulfur recovery unit. The sulfur-lean gas stream is vented directly to the atmosphere. The BTX-oil stream goes to a storage tank. Sulfur balances around the Rectisol unit are given in Tables 12 and 13 for the two types of coal feed.

TABLE 10. EMISSIONS OF SULFUR COMPOUNDS FOR ALTERNATIVE CONTROL LEVELS IN SYNTHANE PROCESS[3]

Basis: 58.4×10^9 kcal/day SNG Production from Pittsburgh Seam Coal (1.6 percent sulfur)

Control Level	Sources of Emissions to Atmosphere			
	Stream 3	Stream 4	Stream 6	Stream 8
	Acid Gases from Potassium Carbonate Process	Off-Gas from Stretford	Off-Gas from Catalyst Guard	Off-Gas from Wastewater Treatment
No Control				
Sulfur compounds, ppm				
H_2S	15,000	--	trace	4.5
COS	trace	--	trace	trace
CS_2	trace	--	trace	trace
SO_2	none	--	NA	none
Total sulfur, MT/day	128	--	1.1	6.0
Sulfur Recovery (Stretford)				
Sulfur compounds, ppm				
H_2S	--	trace	trace	--
COS	--	trace	trace	--
CS_2	--	trace	trace	--
SO_2	--	150	NA	--
Total sulfur, MT/day	--	1.3	1.1	--

(a) Based on total fuel value of SNG product.

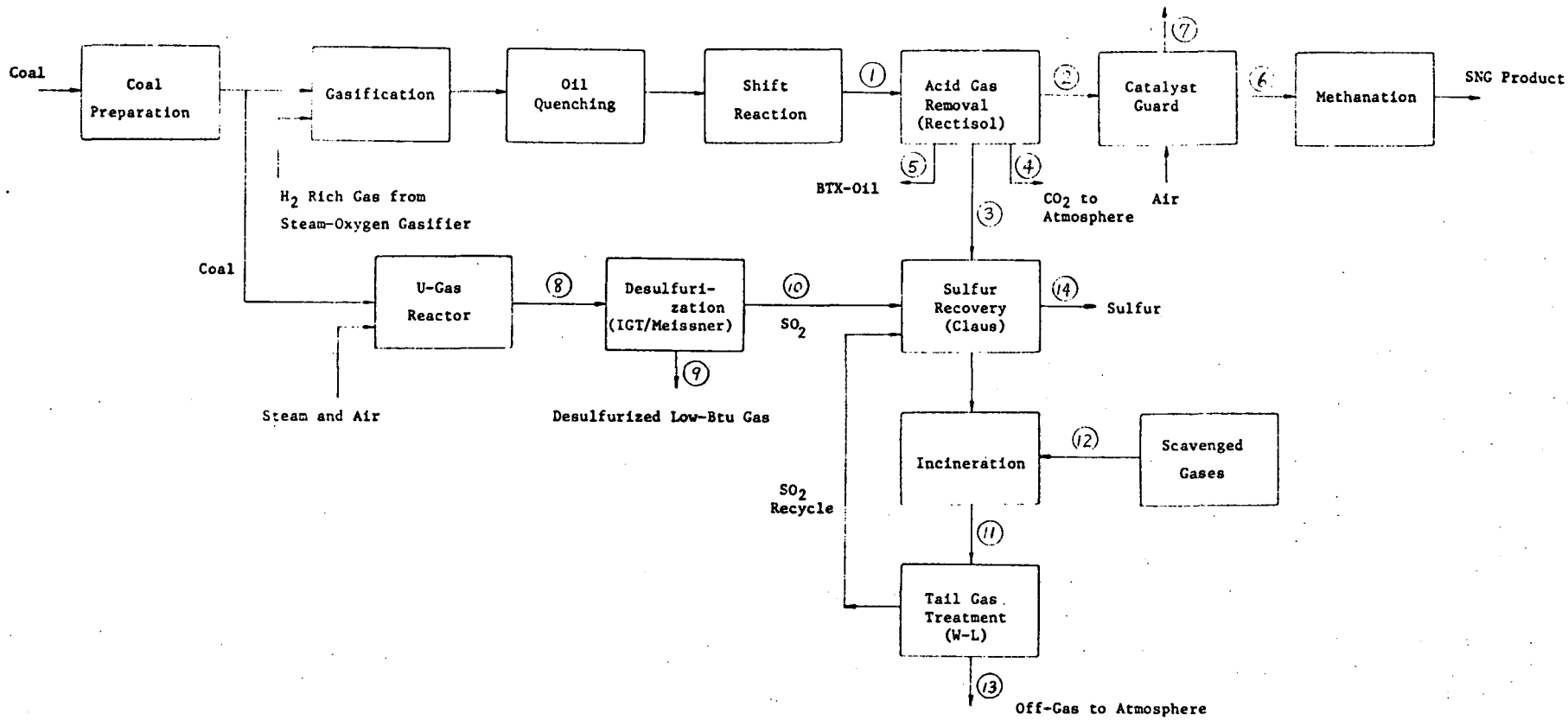

FIGURE 3. FLOWSHEET OF HYGAS PROCESS FOR HIGH-BTU SNG MANUFACTURE[3]

Legend for Figure 3

Stream Number	Description
1	Converted fuel gas feed to Rectisol unit for acid-gas removal
2	Purified fuel gas from Rectisol unit
3	Regenerated H_2S stream from Rectisol unit
4	Regenerated CO_2 stream from Rectisol unit vented to atmosphere
5	Oils recovered from Rectisol unit
6	Purified fuel gas from catalyst guard
7	Off gas from catalyst-guard regeneration vented to atmosphere
8	Low-Btu fuel gas from U-gas reactor
9	Desulfurized low-Btu fuel gas from IGT-Meissner unit
10	Regenerated SO_2 from low-Btu fuel gas desulfurization unit (IGT-Meissner)
11	Tail gas from Claus unit after incinerator
12	Combined scavenged gases from process oil storage and wastewater treatment for ammonia recovery
13	Off gas from Wellman-Lord unit for treatment of Claus plant tail gas and scavenged gas
14	Elemental sulfur produced from Claus plant
15	SO_2 recycled from Wellman-Lord unit to Claus plant

TABLE 11. DESIGN BASIS FOR HYGAS PROCESS FOR THE MANUFACTURE OF HIGH-Btu SNG[3]

Coal Feed		
Type	Montana Subbituminous	Illinois No. 6
Heating value, kcal/kg	4,904	6,550
Sulfur content, % by wt	0.51	3.93
Feed rate, MT/day	21,476	15,888
Gas Production		
Production rate, nm^3/day[a]	7.36×10^6	7.36×10^6
Heating value, kcal/nm^3[a]	8,597	8,571
Total fuel value, kcal/day	63×10^9	63×10^9
Thermal Efficiency,[b] percent	60.1	59.8

(a) Standard conditions are 15.6 C, 1 atm.

(b) Defined as the percentage of the total heating value of the coal feed recovered in the high-Btu SNG product.

TABLE 12. SULFUR BALANCE AROUND RECTISOL UNIT FOR DESULFURIZATION OF FUEL GAS IN HYGAS PROCESS[3]

Basis: 63×10^9 kcal/day SNG production from Montana Subbituminous coal (0.51 percent sulfur)

	Input Stream	Output Streams			
	1	2	3	4	5
	Fuel Gas In	Fuel Gas Out	Regenerated H_2S Out	CO_2 Vent	BTX-Oil Out
Total Gas Flow, 10^6 nm^3/hr	1.097	0.733	0.00815	0.352	(a)
Sulfurous Compounds, volume percent					
H_2S	0.22	0.1 ppm	29.86	9 ppm	0.44[b]
COS	25 ppm	NA	0.14	39 ppm	NA
CS_2	NA	NA	NA	NA	NA
Sulfur in Stream					
kg/hr	3,300	0.091	3,300	23	14.5
kg/10^6 kcal	1.3	34×10^{-6}	1.3	0.0088	0.0055

(a) 102 kg moles/hr.

(b) Mole percent.

(c) Based on the total HHV of SNG product.

TABLE 13. SULFUR BALANCE AROUND RECTISOL UNIT FOR DESULFURIZATION OF FUEL GAS IN HYGAS PROCESS[3]

Basis: 63 x 10^9 kcal/ day SNG production from Illinois No. 6 coal (3.93 percent sulfur)

	Input Stream	Output Streams			
	1	2	3	4	5
	Fuel Gas in	Fuel Gas Out	Regenerated H_2S Out	CO_2 Vent	BTX-Oil Out
Total Gas Flow, 10^6 nm^3/hr	1.007	0.674	0.0484	0.282	(a)
Sulfurous Compounds, volume percent					
H_2S	1.44	0.1 ppm	29.83	11 ppm	0.47[b]
COS	0.02	NA	0.17	300 ppm	NA
CS_2	NA	NA	NA	NA	NA
Sulfur in Stream					
kg/hr	19,900	0.091	19,600	116	10
kg/10^6 kcal[c]	7.6	34×10^{-6}	7.5	0.045	0.0038

(a) 67.6 kg moles/hr

(b) Mole percent

(c) Based on the total HHV of SNG product.

The desulfurized fuel gas from the Rectisol unit is further purified by utilizing a catalyst guard prior to methanation. The fuel gas feed (Stream 2) to the catalyst guard contains very little sulfur (less than 1 ppm by volume of H_2S or 0.09 kg/hr (0.2 lb/hr) of equivalent sulfur). Consequently, the amount of sulfur removed by the catalyst guard also will be small. Emission of SO_2 from regeneration of the catalyst guard is estimated at 0.09 kg/hr (0.2 lb/hr) or 11×10^{-6} kg/10^6 kcal (19×10^{-6} lb/10^6 Btu) of equivalent sulfur.

The low-Btu gas produced by the U-Gas process is desulfurized utilizing a proprietary high-temperature process. Sulfur is regenerated from the desulfurization process as SO_2, which is sent to a Claus sulfur recovery unit. A sulfur balance around the desulfurization unit is given in Tables 14 and 15 for the two types of coal used. The residual sulfur contained in the desulfurized fuel gas as H_2S, COS, and CS_2 will be eventually converted to and emitted as SO_2 from on-site power plant.

Sulfur Recovery

A Claus plant is utilized for sulfur recovery. Feed to the Claus unit consists of: (1) an H_2S stream from the Rectisol unit (Stream 3), and (2) an SO_2 stream from the IGT-Meissner unit (Stream 10).

The tail gas (Stream 11) from the Claus unit is combined with scavenged waste gases (Stream 12), incinerated, and treated by the Wellman-Lord process prior to discharge to the atmosphere.

Sulfur balance around the Claus unit depends on whether or not the Wellman-Lord unit is used for tail gas treatment, since the sulfur dioxide captured by the Wellman-Lord process is usually recycled to the Claus unit. In order to assess the comparative sulfur emissions with and without tail gas treatment, sulfur balances were obtained for (1) the Claus unit alone without the Wellman-Lord unit, and (2) the Claus unit and the Wellman-Lord unit combined. Incineration was considered part of the Claus unit, since such practice is usually considered a minimum requirement for Claus plant operation.

TABLE 14. SULFUR BALANCE AROUND IGT-MEISSNER UNIT FOR DESULFURIZATION OF LOW-BTU GAS IN HYGAS PROCESS[3]

Basis: 63 x 10^9 kcal/day SNG production from Montana Subbituminous coal (0.51 percent sulfur)

	Input Stream	Output Streams	
	8	9	10
	Fuel Gas In	Fuel Gas Out	SO_2 from Regeneration
Total Gas Flow, 10^6 nm^3/day	NA	NA	0.0034
Sulfur Compounds, percent by volume			
H_2S	NA	NA	Trace
COS	NA	NA	Trace
CS_2	NA	NA	Trace
SO_2	Trace	Trace	20.75
Sulfur in Stream			
kg/hr	1,090	87	950
kg/10^6kcal[a]	0.42	0.033	0.36

(a) Based on total HHV of SNG product.

TABLE 15. SULFUR BALANCE AROUND IGT-MEISSNER UNIT FOR DESULFURIZATION OF LOW-Btu GAS IN HYGAS PROCESS[3]

Basis: 63 x 10^9 kcal/day SNG production from Illinois No. 6 coal (3.93 percent coal)

	Input Stream	Output Stream	
	8	9	10
	Fuel Gas In	Fuel Gas Out	SO_2 Regeneration
Total Gas Flow, 10^6 nm^3/day	NA	NA	0.020
Sulfur Compounds, percent by volume			
H_2S	NA	NA	Trace
COS	NA	NA	Trace
CS_2	NA	NA	Trace
SO_2	Trace	Trace	21.00
Sulfur in Stream			
kg/hr	5,760	93	5,710
kg/10^6Btu	2.2	0.035	2.2

(a) Based on total HHV of SNG product.

A sulfur balance around the Claus unit alone was obtained as follows:

(1) Air input to the Claus plant assumed at the stoichiometric oxygen requirement for the Claus reactions

(2) A sulfur recovery efficiency assumed at 93 percent[4] for the Claus plant

(3) Sulfur compounds in the Claus plant effluent assumed at the following concentrations:[5]

Component	Mole Percent
COS	0.05
CS_2	0.04
S_8	0.05
$H_2S + SO_2$	Balance of total sulfur (H_2S/SO_2 = 2/1)

(4) Incinerator operation at following conditions:

Inlet temperature: 140 C (284 F)

Outlet temperature: 649 C (1200 F)

Fuel: methane

Combustion air: 10 percent excess.

Sulfur balances around the Claus unit obtained as described are given in Tables 16 and 17 for the two types of coal used.

Tail Gas Treatment

The Claus unit tail gas after sulfur compounds are converted to SO_2 by incineration is treated by the Wellman-Lord process. The SO_2 captured by the Wellman-Lord process is recycled to the Claus plant. Sulfur-balance data as given in the Booz-Allen report[3] are summarized in Tables 18 and 19.

Emissions and Control of Sulfurous Compounds

Emissions of sulfurous compounds to the atmosphere can be considered at several levels of control up to the fully controlled level as

TABLE 16. SULFUR BALANCE AROUND CLAUS UNIT FOR SULFUR RECOVERY IN HYGAS PROCESS[3]

Basis: 63 x 10^9 kcal/day SNG production from Montana Subbituminous coal (0.51 percent sulfur)

	Input Streams			Output Streams	
	3	10	12	11	14
	H_2S from Rectisol	SO_2 from U-Gas	Scavenger Gas to Incineration	Tail Gas After Incineration	Sulfur Recovered
Total Gas Flow, 10^6 nm^3/hr	0.00815	0.0034	0.0028	0.024	-
Sulfurous Compounds, mole percent					
H_2S	29.86	Trace	1.98	Trace	-
COS	0.14	Trace	76 ppm	Trace	-
CS_2	NA	Trace	NA	Trace	-
SO_2	Trace	20.75	Trace	1.29	-
Sulfur in Stream					
kg/hr	3,300	950	113	420	3,940
kg/10^6 kcal[a]	1.3	0.36	0.043	0.16	-

(a) Based on the total HHV of SNG product.

TABLE 17. SULFUR BALANCE AROUND CLAUS UNIT FOR SULFUR RECOVERY IN HYGAS PROCESS[3]

Basis: 63 x 10^9 kcal/day SNG production from Illinois No. 6 coal (3.93 percent sulfur)

	Input Streams			Output Streams	
	3	10	12	11	14
	H_2S from Rectisol	SO_2 from U-Gas	Scavenger Gas to Incineration	Tail Gas After Incineration	Sulfur Recovered
Total Gas Flow, 10^6 nm^3/hr	0.0484	0.020	0.0045	0.114	-
Sulfurous Compounds, mole percent					
H_2S	29.83	Trace	1.94	Trace	-
COS	0.17	Trace	0.01	Trace	-
CS_2	NA	Trace	NA	Trace	-
SO_2	Trace	21.00	Trace	1.23	-
Sulfur in Stream					
kg/hr	19,600	5,710	119	1,890	23,500
kg/10^6kcal[a]	7.5	2.2	0.045	0.72	-

(a) Based on the total HHV of SNG product.

TABLE 18. SULFUR BALANCE AROUND CLAUS UNIT PLUS WELLMAN-LORD TAIL GAS TREATMENT IN HYGAS PROCESS[3]

Basis: 63 x 10^9 kcal/day SNG production from Montana subbituminous coal (0.51 percent sulfur)

	Input Streams			Output Streams	
	3	10	12	13	14
	H_2S from Rectisol	SO_2 from U-Gas	Scavenger Gas to Incineration	Tail Gas from Wellman-Lord	Sulfur Recovered
Total Gas Flow, 10^6 nm^3/hr	0.00815	0.0034	0.0028	0.024	-
Sulfurous Compounds, mole percent					
H_2S	29.86	Trace	1.98	Trace	-
COS	0.14	Trace	76 ppm	Trace	-
CS_2	NA	Trace	NA	Trace	-
SO_2	Trace	20.75	Trace	250 ppm	-
Sulfur in Stream					
kg/hr	3,300	950	113	8.2	4,350
kg/10^6 kcal[a]	1.3	0.36	0.043	0.0031	-

(a) Based on the total HHV of SNG product.

TABLE 19. SULFUR BALANCE AROUND CLAUS UNIT PLUS WELLMAN-LORD TAIL GAS TREATMENT IN HYGAS PROCESS [3]

Basis: 63 x 10^9 kcal/day SNG production from Illinois No. 6 coal (3.93 percent sulfur)

	Input Streams			Output Streams	
	3 H_2S from Rectisol	10 SO_2 from U-Gas	12 Scavenger Gas to Incineration	13 Tail Gas from Wellman-Lord	14 Sulfur Recovered
Total Gas Flow, 10^6 nm^3/hr	0.0484	0.020	0.0045	0.114	--
Sulfurous Compounds, mole percent					
H_2S	29.83	Trace	1.94	Trace	--
COS	0.13	Trace	0.01	Trace	--
CS_2	NA	Trace	NA	Trace	--
SO_2	Trace	21.00	Trace	250 ppm	--
Sulfur in Stream					
kg/hr	19,600	5,710	119	39	25,400
kg/10^6 kcal[a]	7.5	2.2	0.045	0.015	--

(a) Based on the total HHV of SNG product.

displayed in the process flowsheet. Three alternatives for the control of sulfurous emissions can be considered as follows:

(1) No control-Neither sulfur recovery nor desulfurization of the low-Btu gas will be included. Sulfurous emissions in this case will consist of: (1) acid gases from the Rectisol unit, (2) off-gas from wastewater treatment, and (3) sulfurous compounds in the undesulfurized low-Btu gas converted to and emitted as SO_2 from an on-site power plant.

(2) Sulfur recovery-Under this alternative, a Claus unit with an incinerator and desulfurization of the low-Btu gas will be included. The sulfurous emissions in this case will be the Claus plant incinerator off-gas containing sulfur as SO_2.

(3) Sulfur recovery plus tail gas treatment--The tail gas from the Claus incinerator will be treated by the Wellman-Lord process. The sulfurous emissions under this alternative will be the off-gas from the Wellman-Lord process containing sulfur as SO_2.

Emissions of sulfurous compounds for the three control alternatives as described are summarized in Tables 20 and 21 for the two types of coal used.

TABLE 20. EMISSIONS OF SULFUR COMPOUNDS FOR ALTERNATIVE CONTROL LEVELS IN HYGAS PROCESS[3]

Basis: 63 x 10^9 kcal/day SNG Production from Montana Subbituminous Coal (0.51 percent sulfur)

Control Level	Sources of Emissions to Atmosphere						
	Stream 3 Acid Gases from Rectisol	Stream 4 CO_2 Vent from Rectisol	Stream 8 Undesulfurized Low-Btu Gas[a]	Stream 9 Desulfurized Low-Btu Gas[a]	Stream 11 Tail Gas from Claus[b]	Stream 12 Scavenged Gas	Stream 13 Tail Gas from Wellman-Lord
No Control							
Sulfur compounds, ppm							
H_2S	298,600	9	trace	--	--	19,800	--
COS	1,400	39	trace	--	--	76	--
SO_2	trace	trace	NA	--	--	trace	--
Total sulfur, MT/day	79	0.55	26	--	--	2.7	--
Sulfur Recovery (IGT-Meissner and Claus)							
Sulfur compounds, ppm							
H_2S	--	9	--	trace	trace	--	--
COS	--	39	--	trace	trace	--	--
SO_2	--	trace	--	NA	12,900	--	--
Total sulfur, MT/day	--	0.55	--	2.1	10	--	--
Sulfur Recovery Plus Tail Gas Treatment (IGT-Meissner, Claus, and Wellman-Lord							
Sulfur compounds, ppm							
H_2S	--	9	--	trace	--	--	trace
COS	--	39	--	trace	--	--	trace
SO_2	--	trace	--	NA	--	--	250
Total sulfur, MT/day	--	0.55	--	2.1	--	--	0.20

(a) SO_2 emission from combustion of the low-Btu gas in on-site steam/power plant.

(b) After incineration.

TABLE 21. EMISSIONS OF SULFUR COMPOUNDS FOR ALTERNATIVE CONTROL LEVELS IN HYGAS PROCESS

Basis: 63 x 10^9 kcal/day SNG Production from Illinois No. 6 Coal (3.93 percent sulfur)

Control Level	Sources of Emissions to Atmosphere						
	Stream 3 Acid Gases from Rectisol	Stream 4 CO_2 Vent from Rectisol	Stream 8 Undesulfurized Low-Btu Gas[a]	Stream 9 Desulfurized Low-Btu Gas[a]	Stream 11 Tail Gas from Claus[b]	Stream 12 Scavenged Gas	Stream 13 Tail Gas from Wellman-Lord
No Control							
Sulfur compounds, ppm							
H_2S	298,300	11	trace	--	--	19,400	--
COS	1,700	300	trace	--	--	100	--
SO_2	trace	trace	NA	--	--	trace	--
Total sulfur, MT/day	470	2.8	138	--	--	2.9	--
Sulfur Recovery (IGT-Meissner and Claus)							
Sulfur compounds, ppm							
H_2S	--	11	--	trace	trace	--	--
COS	--	300	--	trace	trace	--	--
SO_2	--	trace	--	NA	12,300	--	--
Total sulfur, MT/day	--	2.8	--	2.2	45	--	--
Sulfur Recovery Plus Tail Gas Treatment (IGT-Meissner, Claus, and Wellman-Lord)							
Sulfur compounds, ppm							
H_2S	--	11	--	trace	--	--	trace
COS	--	300	--	trace	--	--	trace
SO_2	--	trace	--	NA	--	--	250
Total sulfur, MT/day	--	2.8	--	2.2	--	--	0.94

(a) SO_2 emission from combustion of low-Btu gas in on-site steam/power plant.

(b) After incineration.

CO_2-Acceptor Process (High-Btu SNG)

The CO_2-Acceptor process is one of the advanced processes for SNG manufacture currently under development by the Consolidation Coal Company. A flowsheet of the process is shown in Figure 4. The flowsheet and material-balance data, including emissions of sulfur compounds, are based on the information developed in the recent Booz-Allen study.[3] The basis for process design is presented in Table 22.

Fuel Gas Desulfurization

Most of the sulfur in the coal feed is removed by a dolomite acceptor during the gasification stage and discharged from the acceptor regenerator as MgO.CaS in the ash. The remaining sulfur compounds in the fuel gas stream (Stream 2) are removed by the hot potassium carbonate process and further purified by a catalyst guard using a sponge-iron sorbent prior to methanation.

The regenerated gas (Stream 4), containing mostly carbon dioxide, water vapor, and about 1 percent hydrogen sulfide, from the hot potassium carbonate absorption stage is utilized to strip out hydrogen sulfide from the ash by the reaction of carbon dioxide and water with MgO.CaS to form H_2S and $MgO.CaCO_3$. The off-gas from ash treatment now enriched with H_2S to about 9 mole percent level is sent to a Claus plant for sulfur recovery.

Sulfur balances around the hot potassium carbonate desulfurizer, the ash treatment stage, and the sponge-iron catalyst guard are presented in Tables 23 through 25.

Sulfur Recovery

The off-gas (Stream 6) from ash treatment and an off-gas (Stream 8) from sour wastewater treatment are treated in a Claus plant for sulfur recovery. A sulfur balance around the Claus plant was obtained by using the same method described in the preceding section for the Hygas process, except for the sulfur recovery efficiency assumed at 83 percent. Tail gas

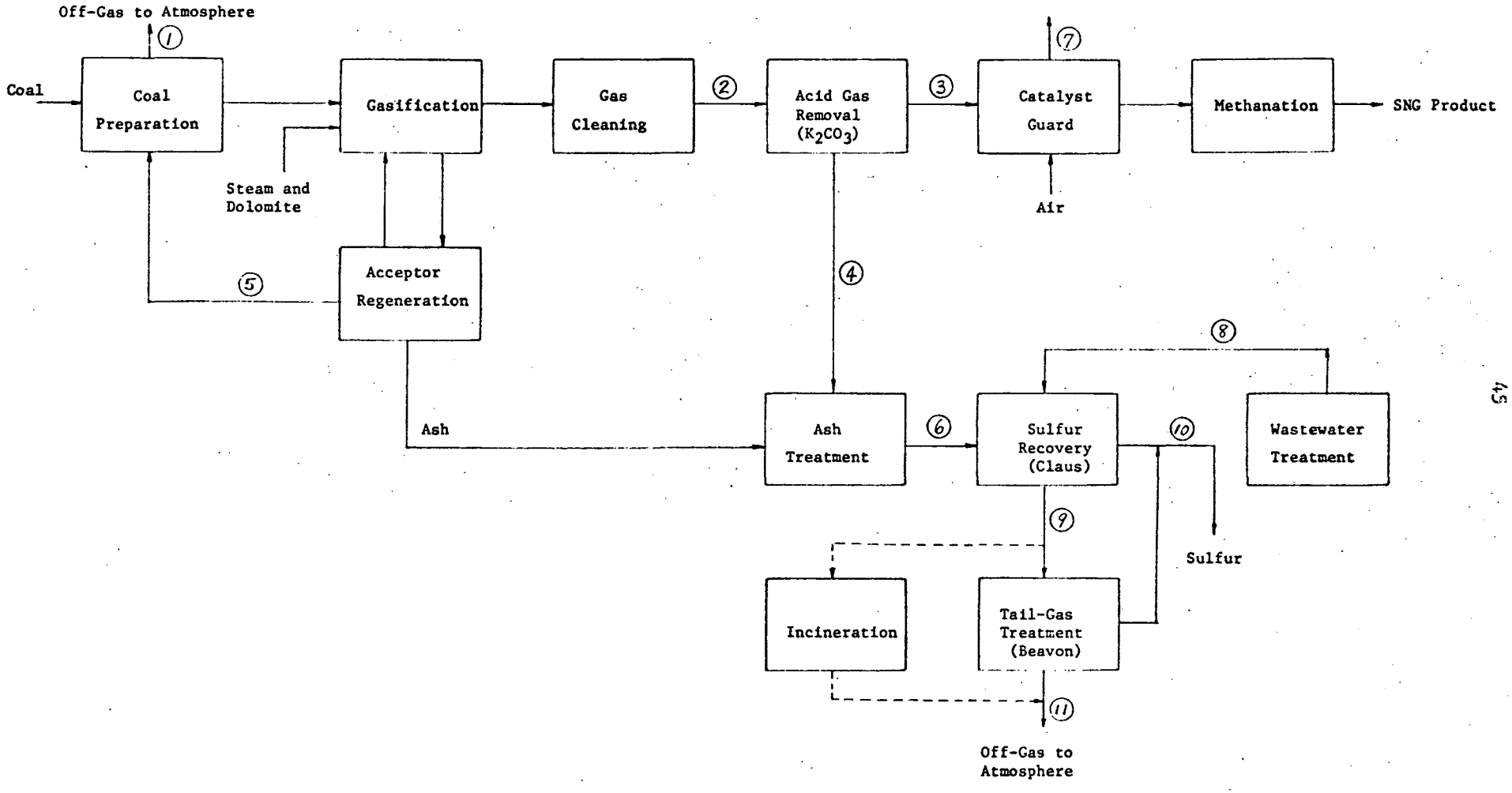

FIGURE 4. FLOWSHEET OF CO_2-ACCEPTOR PROCESS FOR HIGH-BTU SNG MANUFACTURE[3]

Legend for Figure 4

Stream Number	Description
1	Off gas from coal preparation vented to atmosphere
2	Fuel gas to hot potassium carbonate unit for acid-gas removal
3	Purified fuel gas from hot potassium carbonate unit
4	Regenerated acid gases from hot potassium carbonate unit
5	Off gas from acceptor regeneration used for coal preparation
6	Off gas from ash treatment
7	Off gas from catalyst-guard regeneration vented to atmosphere
8	Off gas from wastewater treatment
9	Tail gas from Claus plant, either sent to Beavon unit for treatment or vented to atmosphere after incineration
10	Elemental sulfur recovered from Claus plant or Claus plant plus Beavon unit
11	Off gas from Beavon unit for Claus plant tail gas treatment vented to atmosphere

TABLE 22. DESIGN BASIS FOR CO_2-ACCEPTOR PROCESS FOR THE MANUFACTURE OF HIGH-BTU SNG[3]

Coal Feed	
Type	North Dakota Lignite
Heating value, kcal/kg	3,930
Sulfur content, percent by weight	0.59
Feed rate, MT/day	26,172
Gas Production	
Production rate, nm^3/day[a]	7.36×10^6
Heating value, kcal/nm^3[a]	8,475
Total fuel value	62.5×10^9
Thermal Efficiency,[b] percent	59.2

(a) Standard conditions are 15.6 C, 1 atm.

(b) Defined as the percentage of the total heating value of the coal feed recovered in the high-Btu SNG product.

TABLE 23. SULFUR BALANCE AROUND HOT POTASSIUM CARBONATE UNIT IN CO_2-ACCEPTOR PROCESS

Basis: 62.5×10^9 kcal/day SNG Production from North Dakota Lignite (0.59 percent sulfur)

	Input Stream	Output Streams	
	2	3	4
	Fuel Gas In	Fuel Gas Out	Regenerated Acid Gas
Total Gas Flow, 10^6 nm^3/hr	0.785	0.706	0.0923
Sulfurous Compounds, mole percent			
H_2S	0.05	21 ppm	0.45
COS	9.3 ppm	trace	trace
CS_2	NA	trace	trace
Sulfur in Stream			
kg/hr	540	20	520
kg/10^6 kcal[a]	0.21	0.0077	0.20

(a) Based on the total HHV of SNG product.

TABLE 24. SULFUR BALANCE AROUND ASH TREATMENT UNIT IN CO_2-ACCEPTOR PROCESS[3]

Basis: 62.5×10^9 kcal/day SNG Production from North Dakota Lignite (0.59 percent sulfur)

	Input Streams		Output Stream
	12	4	6
	Ash In	Regenerated Acid Gas	H_2S to Claus Unit
Total Gas Flow, 10^6 nm^3/hr	--	0.0923	0.041
Sulfurous Compounds, mole percent			
H_2S	--	0.45	9.33
COS	--	trace	trace
CS_2	--	trace	trace
Sulfur in Stream			
kg/hr	4,630	520	5,150
kg/10^6 kcal[a]	1.78	0.20	2.0

(a) Based on total HHV of SNG product.

TABLE 25. SULFUR BALANCE AROUND CATALYST GUARD IN CO_2-ACCEPTOR PROCESS[3]

Basis: 62.5×10^9 kcal/day SNG Production from North Dakota Lignite (0.59 percent sulfur)

	Input Stream	Output Streams	
	3	13	7
	Fuel Gas In	Fuel Gas Out	Off-Gas to Atmosphere
Total Gas Flow, 10^6 nm^3/hr	0.706	0.706	NA
Sulfurous Compounds, mole percent			
H_2S	21 ppm	trace	trace
COS	trace	trace	trace
CS_2	trace	trace	trace
SO_2	trace	trace	NA
Sulfur in Stream			
kg/hr	20	neg	20
kg/10^6 kcal[a]	0.0077	neg	0.0077

(a) Based on total HHV of SNG product.

incineration was assumed again as part of the Claus plant in projecting the sulfurous emissions from the Claus plant alone without tail gas treatment. A sulfur balance around the Claus plant is presented in Table 26.

Tail Gas Treatment

The tail gas from the Claus plant is treated by the Beavon process in the scheme proposed in the Booz-Allen study. In this scheme, an incinerator would be used to treat the off-gas from the Beavon unit rather than the off-gas from the Claus plant. The Beavon process is a two-step process involving catalytic hydrogenation followed by the Stratford process. In the Claus-Beavon treatment scheme, the tail gas from the Claus plant will be reacted first with hydrogen to convert sulfur compounds into hydrogen sulfide. Hydrogen sulfide is removed in the next step by the Stretford process. The off-gas from the Beavon process will contain residual sulfur mostly as COS and CS_2 present originally in the gas stream following the catalytic hydrogenation step. The sulfur compounds will be converted to SO_2 by incineration prior to discharge to the atmosphere. A sulfur balance around the Claus plant and the Beavon unit combined is presented in Table 27. The total sulfur content of the discharge stream (Stream 11) was assumed at 250 ppm of SO_2.

Coal Preparation

Feed coal is dried as part of feed preparation stage using the off-gas from acceptor regeneration stage. During the drying operation, a fraction of the sulfur in the feed coal is driven off as SO_2 and discharged into the atmosphere with the drier off-gas (Stream 1). A sulfur balance around the coal preparation stage is presented in Table 28.

TABLE 26. SULFUR BALANCE AROUND CLAUS UNIT IN CO_2-ACCEPTOR PROCESS [3]

Basis: 62.5×10^9 kcal/day SNG Production from North Dakota Lignite (0.59 percent sulfur)

	Input Streams		Output Streams	
	6	8	9	10
	Off-Gas from Ash Treatment	Off-Gas from Wastewater Treatment	Tail Gas After Incineration	Sulfur Recovered
Total Gas Flow, 10^6 nm^3/hr	0.0410	2.8×10^{-5}	0.0750	--
Sulfurous Compounds, mole percent				
H_2S	9.33	4.09 [a]	trace	--
COS	trace	trace	trace	--
CS_2	trace	trace	trace	--
SO_2	trace	trace	0.89	--
Sulfur in Stream				
kg/hr	5,150	1.6	910	4,240
kg/10^6 kcal [b]	2.0	0.00061	0.35	--

(a) Assumed at the value given in Table 4 for Stream 7 in the Lurgi process.
(b) Based on the total HHV of SNG product.

TABLE 27. SULFUR BALANCE AROUND CLAUS UNIT PLUS BEAVON TAIL GAS TREATMENT IN CO_2-ACCEPTOR PROCESS[3]

Basis: 62.5×10^9 kcal/day SNG Production from North Dakota Lignite (0.59 percent sulfur)

	Input Streams		Output Streams	
	6	8	11	10
	Off-Gas from Ash Treatment	Off-Gas from Wastewater Treatment	Tail Gas After Incineration	Sulfur Recovered
Total Gas flow, 10^6 nm^3/hr	0.0410	2.8×10^{-5}	0.0750	--
Sulfurous Compounds, mole percent				
H_2S	9.33	4.09[a]	trace	--
COS	trace	trace	trace	--
CS_2	trace	trace	trace	--
SO_2	trace	trace	250 ppm	--
Sulfur in Stream				
kg /hr	5,150	1.6	25.4	5,130
kg/10^6 kcal[b]	2.0	0.00061	0.0098	--

(a) Assumed at the value given in Table 4 for Stream 7 in the Lurgi process.
(b) Based on total HHV of SNG product.

TABLE 28. SULFUR BALANCE AROUND COAL PREPARATION UNIT IN CO_2-ACCEPTOR PROCESS[3]

Basis: 62.5×10^9 kcal/day SNG Production from North Dakota Lignite (0.59 percent sulfur)

	Input Stream 5 Off-Gas from Acceptor Regeneration	Output Stream 1 Off-Gas from Coal Preparation
Total Gas Flow, 10^6 nm^3/hr	1.41	2.55
Sulfurous Compounds, mole percent		
H_2S	trace	trace
COS	trace	trace
CS_2	trace	trace
SO_2	0.03	0.03
Sulfur in Stream		
kg/hr	590	1,040
kg/10^6 kcal[a]	0.23	0.40

(a) Based on total HHV of SNG product.

Emissions and Control of Sulfurous Compounds

Three alternatives for sulfur emission control can be considered as follows:

(1) No control--The first level of control can be considered without sulfur recovery. In this case sulfurous emissions will include: (1) SO_2 emissions from coal preparation, (2) SO_2 emissions from catalyst guard regeneration, (3) regenerated off-gas from hot potassium carbonate absorption, and (4) off-gas from wastewater treatment. The ash from the acceptor regeneration stage would most likely be disposed of as such without desulfurization.

(2) Sulfur recovery--This alternative will include the Claus plant without tail gas treatment. Sulfurous emissions will include: (1) SO_2 emissions from coal preparation, (2) SO_2 emissions from catalyst guard regeneration, and (3) SO_2 emissions in the tail gas from the Claus plant.

(3) Sulfur recovery plus tail gas treatment--This will represent the fully controlled level involving the use of a Claus plant and a Beavon unit for tail gas treatment. Sulfurous emissions will consist of: (1) SO_2 emissions from coal preparation, (2) SO_2 emissions from catalyst guard regeneration , and (3) SO_2 emissions in the off-gas from the Beavon unit.

Emissions of SO_2 for the three control levels as described are presented in Table 29.

TABLE 29. EMISSIONS OF SULFUR COMPOUNDS FOR ALTERNATIVE CONTROL LEVELS IN CO_2-ACCEPTOR PROCESS[3]

Basis: 62.5×10^9 kcal/day SNG Production from North Dakota Lignite (0.59 percent sulfur)

Control Level	Sources of Emissions to Atmosphere					
	Stream 1	Stream 4	Stream 7	Stream 8	Stream 9	Stream 11
	Off-Gas from Coal Preparation	Acid Gases from Potassium Carbonate Process	Off-Gas from Catalyst Guard	Off-Gas from Wastewater Treatment	Tail Gas from Claus[a]	Tail Gas from Beavon[a]
No Control						
Sulfur compounds, ppm						
H_2S	trace	4,500	trace	40,900	--	--
COS	trace	trace	trace	trace	--	--
SO_2	298	trace	NA	trace	--	--
Total sulfur, MT/day	25.0	12.5	0.48	0.038	--	--
Sulfur Recovery (Claus)						
Sulfur compounds, ppm						
H_2S	trace	--	trace	--	trace	--
COS	trace	--	trace	--	trace	--
SO_2	298	--	NA	--	8,900	--
Total sulfur, MT/day	25.0	--	0.48	--	21.8	--
Sulfur Recovery Plus Tail Gas Treatment (Claus plus Beavon)						
Sulfur compounds, ppm						
H_2S	trace	--	trace	--	--	trace
COS	trace	--	trace	--	--	trace
SO_2	298	--	NA	--	--	250
Total sulfur, MT/day	25.0	--	0.48	--	--	0.61

(a) After incineration.
(b) Based on total HHV of SNG product.

Lurgi Process (Low-Btu Gas)

The Lurgi coal gasification process has been used commercially since 1936 for manufacturing low-Btu fuel gas and ammonia synthesis gas. There are 13 commercial plants in operation today. A flowsheet of the process for the manufacture of a low-Btu utility gas delivered at 2 atm (15 psig) by steam-air gasification of coal is shown in Figure 5. The flowsheet and material-balance data, including emission data, are based on the information developed in the recent Booz-Allen study.[3] The basis for process design is given in Table 30 for the manufacture of a utility gas at a plant capacity of 32.8×10^9 kcal/day (130×10^9 Btu/day).

Of the total coal feed of 9,369 MT/day (10,330 tons/day), 93.7 percent is fed to the gasifier and 6.7 percent is fed to a boiler[5a]. The boiler supplies 213 MT/hr (235 tons/hr) of steam to the gasifier. The expansion of the product gas from 18 atm (250 psig) to 2 atm (15 psig) supplies the energy for driving the air compressor which delivers the gasification air. The expansion turbine produces excess energy estimated at 51,400 kw. The excess energy was included as a credit toward the overall thermal efficiency of the process at a rate of 10,000 Btu coal/kwh.

Fuel Gas Desulfurization and Sulfur Recovery

The fuel gas produced from steam-air gasification is desulfurized using a high-pressure Stretford unit operated at 18 atm (250 psig). In the Stretford unit, H_2S is nearly quantitatively removed and converted to elemental sulfur which is recovered as a by-product. Carbonyl sulfide and carbon disulfide are not removed by the Stretford unit and remain with the fuel gas.

If the Phenosolvan process is employed for the recovery of phenol, an off-gas from the Phenosolvan unit would be emitted, containing hydrogen sulfide. Since the off-gas stream is comparatively small, it was assumed that the off-gas is pressurized and fed to the Stretford unit with the fuel gas for desulfurization. A sulfur balance around the Stretford unit is presented in Table 31.

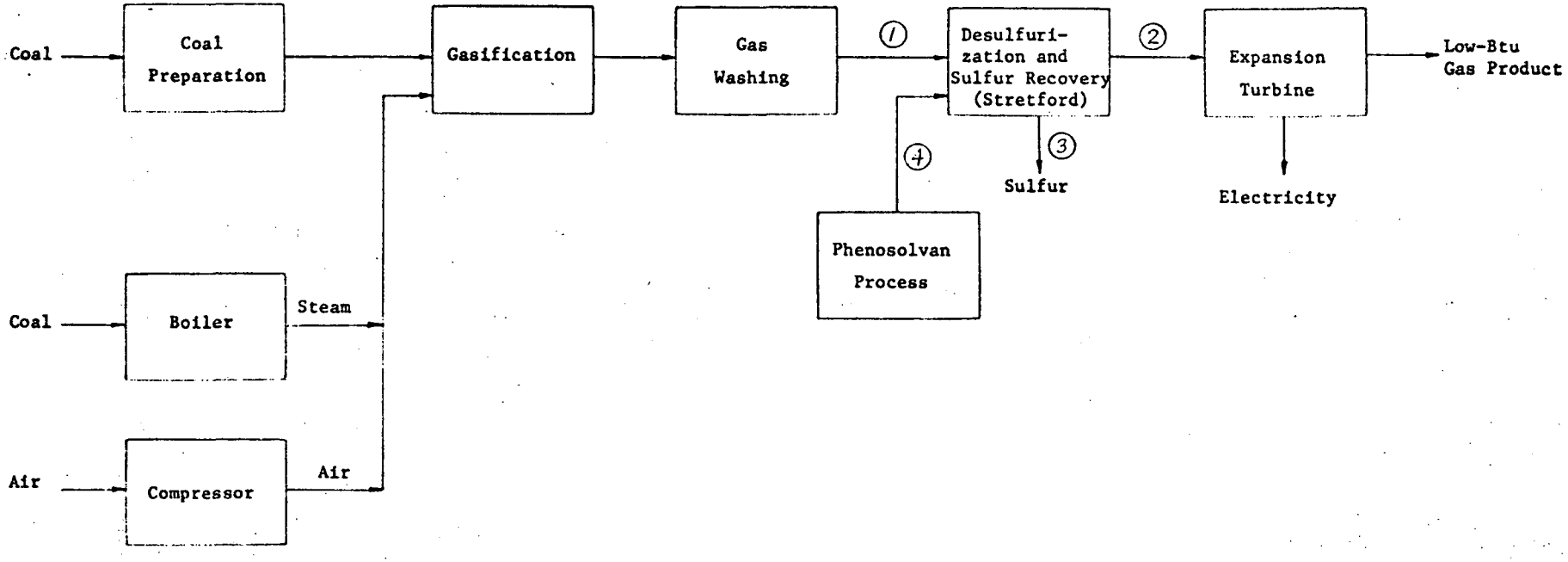

FIGURE 5. FLOWSHEET OF LURGI PROCESS FOR LOW-BTU GAS MANUFACTURE[3]

Legend for Figure 5

Stream Number	Description
1	Sour fuel gas to Stretford unit for desulfurization
2	Purified fuel gas product from Stretford unit
3	Elemental sulfur recovered from Stretford unit
4	Off gas from Phenosolvan process for by-product recovery sent to Stretford unit

TABLE 30. DESIGN BASIS FOR LURGI PROCESS FOR THE MANUFACTURE OF LOW-BTU GAS BY STEAM-AIR GASIFICATION OF COAL[3,5a]

Coal Feed	
Type	Navajo Seam
Heating value, kcal/kg	4,817
Sulfur content, weight percent	0.69
Feed rate, MT/day	9,369
Gas Production	
Production rate, nm^3/day[a]	18.8×10^6
Heating value, kcal/nm^3[a]	1,739
Total fuel value, kcal/day	32.8×10^9
Product gas pressure, atm,	2
Thermal Efficiency,[b] percent	77.9

(a) Dry basis.

(b) Defined as the percentage of the total heating value of the coal feed recovered in the low-Btu gas product plus 51,400 kw of net power generation from expansion of product gas.

TABLE 31. SULFUR BALANCE AROUND HIGH PRESSURE STRETFORD UNIT FOR DESULFURIZATION OF LOW-BTU GAS IN LURGI PROCESS

Basis: 32.8×10^9 kcal/day Low-Btu Gas Production from Navajo Seam Coal (0.69 percent sulfur)

	Input Streams		Output Streams	
	1	4	2	3
	Fuel Gas	Off-Gas from Phenosolvan	Fuel Gas	Sulfur Recovered
Total Gas Flow, 10^6 nm^3/hr (dry basis)	0.774	0.00073	0.773	--
Sulfurous Compounds, mole percent (dry basis)				
H_2S	0.217	4.09	0.001	--
COS	0.013	trace	0.013	--
CS_2	trace	trace	trace	--
Sulfur in Stream				
kg/hr	2,400	45	146	2,300[a]
kg/10^6 kcal[b]	1.8	0.033	0.11	--

(a) By difference.

(b) Based on the total HHV of the low-Btu gas product.

Emissions and Control of Sulfurous Gases

Two alternatives for the control of sulfurous emissions were considered as follows:

(1) No control - Without the Stretford unit, the undesulfurized fuel gas and the off-gas from the Phenosolvan process would be directly sent to a utility boiler. The sulfurous compounds in the gases would be converted to and emitted as SO_2 from the boiler stack.

(2) Desulfurization and sulfur recovery - This alternative involves the use of a Stretford unit for desulfurization of the fuel gas and the off-gas from the Phenosolvan process and the recovery of a sulfur by-product. Sulfurous emissions in this case again would be SO_2 from the combustion of the desulfurized gases in a power plant boiler.

Emissions of sulfurous gases for the two control alternatives as described above are presented in Table 32.

Koppers-Totzek Process (Low-Btu Gas)

The Koppers-Totzek process has been used commercially since 1952 for the production of synthesis gas from coal gasification. There are 20 commercial plants in operation or under construction at present. Most of these plants are designed for the production of ammonia synthesis gas from coal. A flowsheet for the production of a desulfurized utility gas delivered at 2 atm (15 psig) by steam-oxygen gasification is given in Figure 6. The flowsheet and material balance data, including emissions of sulfurous compounds, are based on the information supplied by Koppers Company[6,7]. The basis for process design is given in Table 33 for the manufacture of a utility gas at a plant capacity of 32.8×10^9 kcal/day (130×10^9 Btu/day).

TABLE 32. EMISSIONS OF SULFUR COMPOUNDS FOR ALTERNATIVE CONTROL LEVELS IN LURGI PROCESS FOR LOW-BTU GAS MANUFACTURE[3]

Basis: 32.8×10^9 kcal/day Low-Btu Gas Production from Navajo Seam Coal (0.69 percent sulfur)

Control Level	Sources of Emissions to Atmosphere		
	Stream 1	Stream 2	Stream 4
	Undesulfurized Fuel Gas[a]	Desulfurized Fuel Gas[a]	Off-Gas from Phenolsolvan[a]
No Control			
Sulfur compounds, ppm			
H_2S	trace	--	trace
COS	trace	--	trace
SO_2	346	--	5.6
Total sulfur, MT/day	58	--	1.1
Sulfur Recovery (Stretford)			
Sulfur compounds, ppm			
H_2S	--	trace	--
COS	--	trace	--
SO_2	--	24	--
Total sulfur, MT/day	--	3.5	--

(a) SO_2 emission from combustion of the low-Btu gas in on-site steam/power plant.

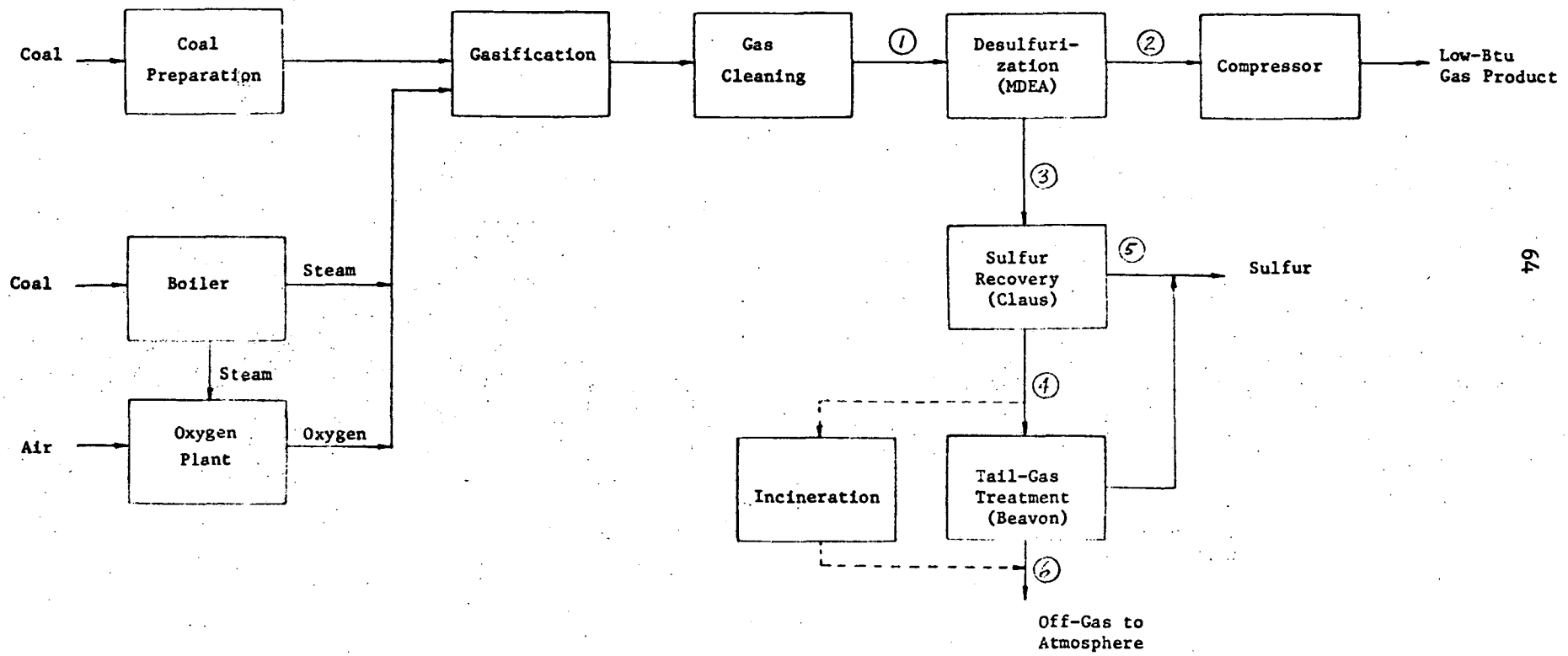

FIGURE 6. FLOWSHEET OF KØPPERS-TOTZEK PROCESS FOR LOW-BTU GAS MANUFACTURE[3]

Legend for Figure 6

Stream Number	Description
1	Sour fuel gas to MDEA unit for desulfurization
2	Desulfurized fuel-gas product from MDEA unit
3	Regenerated acid gases from MDEA unit
4	Tail gas from Claus plant, either sent to Beavon unit for treatment or vented to atmosphere after incineration
5	Elemental sulfur recovered from Claus unit
6	Off gas from Beavon unit for treatment of Claus plant tail gas vented to atmosphere

TABLE 33. DESIGN BASIS FOR KOPPERS-TOTZEK PROCESS FOR THE MANUFACTURE OF LOW-BTU GAS BY STEAM-OXYGEN GASIFICATION OF COAL[6,7a]

Coal Feed	
Type	Eastern High-Volatile Bituminous
Heating value, kcal/kg[a]	7,059
Sulfur content, weight percent[a]	1.08
Feed rate, MT/day[a]	6,715
Gas Production	
Production rate, nm^3/day[b]	12.5×10^6
Heating value, kcal/nm^3[b]	2,620
Total fuel value, kcal/nm^3/day	32.8×10^9
Product gas pressure, atm	2
Thermal Efficiency,[c] percent	69

(a) Based on a dried coal with 2 percent moisture.

(b) Dry basis.

(c) Defined as the percentage of the total heating value of the coal feed recovered in the low-Btu gas product. Of the total coal feed, 83.2 percent is fed to gasifier and 16.8 percent is fed to boiler.

Of the total coal feed of 6,715 MT/day (7,404 tons/day), 83.2 percent is fed to the gasifier and 16.8 percent is fed to a boiler[7a]. The boiler supplies steam for the gasifier and power required primarily for oxygen manufacture and for compressing the product gas to 2 atmosphere (15 psig).

Fuel Gas Desulfurization

The fuel gas produced from steam-oxygen gasification, after washing and cooling, is desulfurized by an amine absorption unit using methyldiethanolamine (MDEA) as an absorbant. The MDEA unit is designed to desulfurize the fuel gas to about 250 ppm of total sulfur compounds as H_2S and COS in the product and to provide a Claus plant feed containing about 28 percent H_2S. An additive is used to hydrolyze and convert about 75 percent of COS in the feed to H_2S. A sulfur balance around the MDEA unit is given in Table 34.

Sulfur Recovery and Tail-Gas Treatment

The H_2S regenerated from the MDEA desulfurization unit is treated by a Claus plant for sulfur recovery. A sulfur-recovery efficiency for the Claus plant was assumed at 93 percent for an H_2S concentration in the feed at 26.9 percent. A sulfur balance around the Claus plant is given in Table 35.

The Beavon process was considered for treating the tail gas from the Claus plant. A sulfur balance around the combined Claus plant and a Beavon unit is given in Table 36.

Emissions and Control of Sulfurous Gases

Three alternatives were considered for the control of sulfurous emissions as follows:

TABLE 34. SULFUR BALANCE AROUND MDEA UNIT FOR DESULFURIZATION OF FUEL GAS [6,7]

Basis: 32.8×10^9 kcal/day Low-Btu Gas Production from Eastern High-Volatile Bituminous Coal (1.08 percent sulfur)

	Input Stream	Output Streams	
	1	2	3
	Fuel Gas	Fuel Gas	H_2S to Claus
Total Gas Flow, 10^6 nm^3/hr [a]	0.526	0.521	0.0068
Sulfurous Compounds, mole percent [a]			
H_2S	0.35	150 ppm	26.9
COS	0.04	100 ppm	1.1
CS_2	trace	trace	trace
Sulfur in Stream			
kg/hr	2,770	177	2,590
kg/10^6 kcal [b]	2.0	0.13	1.9

(a) Dry basis.

(b) Based on the total HHV of the low-Btu gas product.

TABLE 35. SULFUR BALANCE AROUND CLAUS UNIT IN KOPPERS-TOTZEK PROCESS[6,7]

Basis: 32.8×10^9 kcal/day Low-Btu Gas Production from Eastern High-Volatile Bituminous coal (1.08 percent sulfur)

	Input Stream	Output Streams	
	3	4	5
	H_2S from MDEA	Claus Plant Tail Gas[a]	Sulfur Recovered
Total Gas Flow, 10^6 nm^3/hr	0.0068	0.0144	--
Sulfur Compounds, mole percent			
H_2S	26.9	trace	--
COS	1.1	trace	--
SO_2	trace	0.93	--
Sulfur in Stream			
kg/hr	2,590	181	2,400
kg/10^6 kcal[b]	1.9	0.13	--

(a) After incineration.

(b) Based on the total HHV of the low-Btu gas product.

TABLE 36. SULFUR BALANCE AROUND CLAUS UNIT PLUS BEAVON UNIT IN KOPPERS-TOTZEK PROCESS[6,7]

Basis: 32.8 x 10^9 kcal/day Low-Btu Gas Production from Eastern High-Volatile Bituminous Coal (1.08 percent sulfur)

	Input Stream	Output Streams	
	3	6	5
	H_2S from MDEA	Tail Gas from Claus + Beavon	Sulfur Recovered[a]
Total Gas Flow, 10^6 nm^3/hr	0.0068	0.0116	--
Sulfur Compounds, mole percent			
H_2S	26.9	trace	--
COS	1.1	trace	--
SO_2	trace	250 ppm	--
Sulfur in Stream			
kg/hr	2,590	3.9	2,590
kg/10^6 kcal[b]	1.9	0.0029	--

(a) Combined sulfur recovery from Claus plus Beavon units.

(b) Based on the total HHV of the low-Btu gas product.

(1) No control - The fuel gas produced from the gasifier would be directly sent to a utility boiler. The sulfurous compounds in the fuel gas would be converted to and emitted as SO_2 from the boiler stack.

(2) Desulfurization and sulfur recovery - This alternative would involve the use of an MDEA absorption unit to desulfurize the fuel gas and a Claus plant for sulfur recovery. Sulfurous emissions would include SO_2 emission from combustion of the desulfurized fuel gas and SO_2 emission from incineration of a tail gas stream from the Claus plant.

(3) Desulfurization, sulfur recovery, and tail-gas treatment - This alternative would involve treating the Claus plant tail gas using the Beavon process. Sulfurous emissions would include SO_2 emissions from combustion of the desulfurized fuel gas and SO_2 emission from the Beavon process.

Emissions of SO_2 for the three alternatives as described above are given in Table 37.

TABLE 37. EMISSIONS OF SULFUR COMPOUNDS FOR ALTERNATIVE CONTROL LEVELS IN KOPPERS-TOTZEK PROCESS FOR LOW-BTU GAS MANUFACTURE[6,7]

Basis: 32.8×10^9 kcal/day Low-Btu Gas Production from Eastern High-Volatile Bituminous Coal (1.08 percent sulfur)

	Sources of Emissions to Atmosphere			
	Stream 1 Undesulfurized Fuel Gas[a]	Stream 2 Desulfurized Fuel Gas[a]	Stream 4 Tail Gas from Claus Plant[b]	Stream 6 Tail Gas from Claus + Beavon
No Control				
Sulfur compounds, ppm				
H_2S	trace	--	--	--
COS	trace	--	--	--
SO_2	1,000	--	--	--
Total sulfur, MT/day	66	--	--	--
Sulfur Recovery (MDEA plus Claus)				
Sulfur compounds, ppm				
H_2S	--	trace	trace	--
COS	--	trace	trace	--
SO_2	--	70	9,300	--
Total sulfur, MT/day	--	4.2	4.3	--
Sulfur Recovery Plus Tail-Gas Treatment (MDEA plus Claus plus Beavon)				
Sulfur compounds, ppm				
H_2S	--	trace	--	trace
COS	--	trace	--	trace
SO_2	--	70	--	250
Total sulfur, MT/day	--	4.2	--	0.094

(a) SO_2 emission from combustion of the low-Btu gas in a utility boiler.

(b) After incineration.

SULFUROUS EMISSION CONTROL PROCESSES

Control of sulfurous emissions in coal gasification processes can be considered under three broad categories:

(1) Desulfurization of gaseous products from coal gasification

(2) Sulfur recovery

(3) Tail gas treatment.

Desulfurization requirements vary depending upon the end use of products. In the manufacture of a high-Btu SNG, the desulfurization stage usually follows a shift reaction and is employed to remove sulfur compounds to an extremely low level, typically less than 1 ppm, to provide a low sulfur stream for the methanation reaction. The bulk of carbon dioxide is also removed in the desulfurization stage to upgrade the fuel value of the final SNG product and also to achieve more efficient methanation. In an SNG manufacture, therefore, desulfurization is usually considered a part of the production process rather than an emission control process.

In the manufacture of a low-Btu gas for a utility fuel, the raw gas from gasification is desulfurized without shift reaction to produce the fuel gas. The requirement for the residual sulfur in the low-Btu utility gas is considerably less stringent than for the SNG production. For example, to meet the present Federal standards for coal-burning sources set at 2.2 kg $S/10^6$ kcal (1.2 lb $SO_2/10^6$ Btu), a typical low-Btu gas with a heating value of 1740 kcal/nm^3 (195 Btu/scf) manufactured by the Lurgi steam-air gasification can contain up to 1,400 ppm of total sulfur. For a typical low-Btu gas with a heating value of 2620 kcal/nm^3 (294 Btu/scf) from the Koppers-Totzek steam-oxygen gasification, the permissible level is about 2,100 ppm of total sulfur. For utility application, the removal of carbon dioxide from the fuel gas is not considered necessary or even desirable, unless there is an unusual requirement for upgrading the heating value of the fuel.

The desulfurization stage produces a waste gas stream which contains sulfur compounds mainly as hydrogen sulfide. The prevalent method of disposing of the waste gas at existing coal gasification plants outside

of the U. S. appears to be flaring and venting it to the atmosphere. For all of the gasification processes selected in this study for potential usage in the U. S. for the manufacture of high-Btu SNG and low-Btu utility gases, conversion of H_2S into sulfur is considered as the preferred approach for treating the waste gas from desulfurization.

As an additional emission control requirement, treatment of a tail gas from the Claus sulfur recovery process is being considered for coal gasification processes. One approach under consideration involves the addition of a tail gas treatment process to the Claus process to reduce the sulfur content of the tail gas before discharge to the atmosphere. This approach is the most common practice in the petroleum industry for treating Claus tail gas.

An alternative treatment method, which has been proposed for the SNG plant by WESCO, involves piping the tail gas to an on-site coal-fired steam/power plant for combustion and removing the SO_2 resulting from both the tail gas and from coal combustion in a power plant stack-gas cleaning process.

Control processes, which have been proposed or have potential application in coal gasification processes, have been developed and used commercially by the petroleum industry. Typical processes which have commercial importance in the petroleum industry are listed below.

Acid Gas Removal	Sulfur Recovery	Tail Gas Treatment
Adip	Claus	Beavon
Alkazid	Giammarco-Vetrocoke	Cleanair
Benfield	Stretford	IFP-1
Catacarb		SCOT
Fluor Econamine		Sulfreen
Fluor Solvent		Wellman-Lord
MEA		
DEA		
SNPA-DEA		
Purisol		
Rectisol		
Sulfinol		

ACID GAS REMOVAL PROCESSES

Removal of acid gases, such as H_2S and CO_2, is usually accomplished by absorption into a liquid phase using a suitable gas-liquid contacting equipment. Absorption processes can be divided into three broad categories depending upon the type of absorbent used. Physical solvent processes, which include the Selexol, Rectisol, Purisol, and Fluor Solvent processes, operate by the principle of physical absorption. Chemical solvent processes are based on various amines and alkaline salt solutions, which react chemically with acid gases. Amine processes include MEA, DEA, TEA, MDEA, Adip, Econamine, SNPA-DEA, and Sulfinol processes. Processes based on alkaline salt solutions include the Benfield, Catacarb, and Alkazid processes. There are direct conversion processes, such as the Stretford and Giammarco-Vetrocoke processes, which are capable of absorption and oxidation of H_2S to produce sulfur directly. The latter processes are considered as sulfur recovery processes in this study.

Physical Solvent Processes

Physical solvent processes are recommended usually for high-pressure gas treating and for purifying gases to an extremely low level of hydrogen sulfide and other sulfur compounds required for SNG and synthesis gas manufacture. Physical solvent processes in general have the capability for selective absorption of hydrogen sulfide from gases containing carbon dioxide, thereby producing an H_2S-rich stream suitable for a Claus plant feed. Physical solvent processes are capable of removing other sulfur compounds which occur in coal gases such as COS, CS_2, mercaptans, and thiophenes. Disadvantages of physical solvent processes are a relatively high solubility of hydrocarbons in the physical solvents and high solvent costs compared with chemical solvents. Commercially important physical solvent processes are listed in Table 38.

TABLE 38. PHYSICAL SOLVENT PROCESSES FOR GAS PURIFICATION[8]

Process	Developer/Licensee	Commercial Units in Operation or Under Construction
Selexol	Allied Chemical	Now operating or under construction in natural gas treatment, synthesis gas purification, and coal gasification purification
Rectisol	Lurgi, Linde AG	23 in operation plus 7 under construction
Purisol	Lurgi, Linde AG	4 in operation, including 2 for hydrogen production and 2 for natural gas sweetening
Fluor Solvent	Fluor Engineers and Constructors	10 in operation, including 7 on natural gas, 1 in ammonia production, and 2 in hydrogen production

Selexol Process

The process was developed and is licensed by Allied Chemical Corporation. The process is based on physical absorption using dimethylether of polyethylene glycol, tradenamed Selexol, as the solvent. The process will be used for gas purification in the Bi-Gas process for coal gasification as part of the 5 tons/hr pilot plant being built at Homer City, Pennsylvania, by the Bituminous Coal Research.[9]

The Selexol process can be used for gas purification in coal gasification processes for both high-Btu SNG and low-Btu utility gas manufacture. The Selexol process, like other physical absorption processes, is normally designed to operate economically at high pressures. The nominal design pressure for the unit for the Homer City Bi-Gas pilot plant is 69 atm (1000 psig). For low-pressure gasification processes, such as the Koppers-Totzek process, the raw gas is usually pressurized to about 21 atm (300 psig) for the Selexol process.

For high-Btu gas applications, the Selexol process employs two stages. The first stage removes the bulk of hydrogen sulfide preferentially and produces a H_2S-rich stream suitable for a Claus plant feed. The second stage removes CO_2 and the residual H_2S. A sulfur balance around the Selexol process is given in Table 39 for a high-Btu gas application. The residual sulfur content of the purified gas is less than 1 ppm of H_2S and COS combined. The H_2S stream recovered from the first stage contains about 30 percent H_2S plus COS, which can be treated economically in a Claus plant for sulfur recovery. The CO_2 stream recovered from the second stage contains less than 20 ppm of H_2S plus COS. The CO_2 stream is normally vented directly to atmosphere.

For low-Btu gas applications, the first stage alone is used for selective removal of H_2S. A sulfur balance is given in Table 40. The H_2S stream recovered for Claus plant feed contains about 20 percent H_2S plus COS when the gas is treated to a residual sulfur level at around 1 ppm of H_2S plus COS.

Other contaminants, such as HCN, methyl mercaptan, and thiophene, have greater solubilities in Selexol than H_2S and can be removed effectively.

TABLE 39. SULFUR BALANCE AROUND SELEXOL UNIT FOR ACID GAS REMOVAL IN HIGH-BTU SNG MANUFACTURE[10]

Basis: 63×10^9 kcal/day High-Btu SNG Production
Pressure: 69 atm

	Input Stream	Output Streams		
	Fuel Gas In	Fuel Gas Out	CO_2 Vent to Atmosphere	H_2S to Claus
Total Gas Flow, 10^6 nm^3/hr (dry basis)	1.25	0.866	0.348	0.0320
Gas Composition, mole percent (dry basis)				
H_2	46.0	66.3	--	--
CH_4	8.0	11.5	--	--
CO	15.0	21.6	--	--
CO_2	30.0	0.5	100	70
H_2S	0.7	H_2S + COS	H_2S + COS	27
COS	0.07	<1 ppm	= 20 ppm	3
Sulfur in Stream				
kg/hr	13,200	1.2	9.5	13,200
kg/10^6 kcal[a]	5.0	0.00046	0.0036	5.0

(a) Based on total HHV of SNG product.

TABLE 40. SULFUR BALANCE AROUND SELEXOL UNIT FOR DESULFURIZATION OF LOW-BTU GAS [10]

Basis: 32.8×10^9 kcal/day Low-Btu Utility Gas Production
Pressure: 21 atm

	Input Stream	Output Streams	
	Fuel Gas In	Fuel Gas Out	H_2S to Claus
Total Gas Flow, 10^6 nm^3/hr (dry basis)	0.954	0.91	0.034
Gas Composition, mole percent (dry basis)			
H_2	15.0	15.6	NA
CO	22.0	22.9	NA
CH_4	4.0	4.2	NA
N_2	49.0	51.1	NA
CO_2	9.0	6.2	80
H_2S	0.7	H_2S + COS	18
COS	0.07	≈1 ppm	2
Sulfur in Stream			
kg/hr	10,000	1.3	10,000
kg/10^6 kcal[a]	7.3	0.00095	--

(a) Based on the total HHV of low-Btu gas product.

Rectisol Process

The Rectisol process was originally developed jointly by Lurgi and German Linde. The process is licensed in the United States by American Lurgi Corporation and by Lotepro Corporation, a subsidiary of Linde AG-Germany[11].

The Rectisol process is a physical absorption process using methanol as a solvent and typically operated at high pressures 21 to 137 atm (300 to 2000 psig) and at low temperatures using refrigeration. The process can be used for selective desulfurization or total acid-gas removal in the manufacture of both high-Btu and low-Btu gases by coal gasification.

For high-Btu gas applications, gas purification is sometimes accomplished in two stages: the first stage for selective desulfurization, producing an H_2S-rich stream suitable for a Claus plant feed, and the second stage for the bulk removal of CO_2. The CO_2 stream regenerated from the second stage is normally vented directly to the atmosphere. Typical sulfur balances for the Rectisol process in a high-Btu gasification process are shown in Tables 12 and 13 presented earlier in describing the Hygas process.

In low-Btu gasification processes, the first stage alone is employed to remove H_2S and COS selectively. A typical sulfur balance for a low-Btu gas application is given in Table 41.

Purisol Process

The Purisol process was developed by Lurgi in Germany and is licensed in the United States by American Lurgi Corporation.

The Purisol process is a physical absorption process, using N-methylpyrrolidone (NMP) as a solvent. Absorption is usually carried out at high pressures--typically above 55 atm (800 psig)--and at ambient temperature.[13] The solvent, NMP, is similar to Selexol with respect to the total solubilities of H_2S and CO_2 and the selectivity between the two. Performance of the Purisol process, therefore, is expected to be comparable to that of the Selexol process when applied to coal gasification processes. Typical material balance data from natural gas treatment for selective H_2S removal are shown in Table 42. For applications in coal gasification processes, the

TABLE 41. SULFUR BALANCE AROUND RECTISOL UNIT FOR DESULFURIZATION OF LOW-BTU GAS[12]

Basis: 32.8×10^9 kcal/day Low-Btu Gas Production
Pressure: 25 to 27 atm

	Input Stream	Output Streams	
	Fuel Gas In	Fuel Gas Out	H_2S to Claus
Total Gas Flow, 10^6 nm^3/hr (dry basis)	0.931	0.900	0.031
Gas Composition, mole percent (dry basis)			
H_2	16.2	16.8	0.1
CO	21.8	22.5	0.4
CH_4	4.1	4.3	0.6
N_2	48.7	50.4	0.5
CO_2	8.5	6.0	77.8
H_2S	0.6	1	18.2
COS	0.1	1	2.4
Sulfur in Stream			
kg/hr	8,620	2.4	8,620
kg/10^6 kcal[a]	6.3	0.0018	6.3

(a) Based on total HHV of low-Btu gas product.

TABLE 42. MATERIAL BALANCE AROUND PURISOL PROCESS IN SELECTIVE REMOVAL OF H_2S FROM NATURAL GAS[13]

Pressure = 74 atm

	Input Stream	Output Streams	
	Gas In	Gas Out	H_2S to Claus
Gas Composition, mole percent			
CH_4	75.0	82.0	3.0
N_2	4.0	4.4	--
CO_2	15.0	13.6	29.3
H_2S	6.0	2×10^{-4}	67.7

data given earlier for the Selexol process in Tables 39 and 40 would approximate the typical performance expected from the Purisol process.

Fluor Solvent Process

The process was developed and is licensed by Fluor Engineers and Constructors, Inc. The process employs propylene carbonate as a solvent for H_2S and CO_2. The process was originally developed for bulk removal of CO_2 from high-pressure natural gas.

The Fluor solvent process, like other physical solvent processes, is economical for treating gases at high pressures with a partial pressure of acid gases in the feed at 6 atm (75 psi) or higher.[8] In addition to CO_2 and H_2S removal, the process is capable of removing COS, CS_2, and mercaptans.

According to the process developer,[15] a two-step process is recommended for treating sour gas from coal gasification, using the Fluor solvent process followed by a diethanolamine clean-up stage. For a typical coal gas containing 25 to 30 percent CO_2 and 1 percent H_2S, the Fluor solvent process employed as the first step, would remove over 90 percent of each. This is followed by a diethanolamine clean-up step, which reduces the CO_2 concentration to less than 0.5 percent and H_2S to about 16 ppm. The two-step process can be used for gas purification in high-Btu coal gasification processes. The selectivity of the solvent for H_2S removal in the presence of CO_2 is not known to assess the capability of the process for producing an H_2S-rich stream suitable for a Claus plant feed. According to Buckingham[16], H_2S is several times as soluble as CO_2 in propylene carbonate. Supporting data for selectivity are not available. The selectivity for H_2S removal will determine the applicability of the process to desulfurization of low-Btu utility gas manufactured by coal gasification.

Amine Processes

Alkanolamine solutions have been used widely for many years for gas purification. Removal of acidic gases, such as CO_2 and H_2S, is accomplished by the reaction of the amino nitrogen with the acidic gases, as shown below for monoethanolamine:[17]

CO_2 Removal: $2RNH_2 + H_2O + CO_2 \rightleftarrows (RNH_3)_2CO_3$

$(RNH_3)_2CO_3 + H_2O + CO_2 \rightleftarrows 2RNH_3HCO_3$

or

$2RNH_2 + CO_2 \rightleftarrows RNHCOONH_3R$

H_2S Removal: $2RNH_2 + H_2S \rightleftarrows (RNH_3)_2S$

$(RNH_3)_2S + H_2S \rightleftarrows 2RNH_3HS$

An important advantage of amine processes is a low solubility of hydrocarbons in aqueous amine solutions employed.

A typical listing of amine processes is given in Table 43. All amine systems, except TEA and MDEA systems, are commercially active processes. The TEA and MDEA systems are not considered commercially competitive with other amine processes because of comparatively low sorption capacities of tertiary amines. Tertiary amines, such as TEA and MDEA, however, have some selectivity toward H_2S removal. For this reason, the use of tertiary amine systems will have an important advantage in coal gasification processes, where the ratio of H_2S to CO_2 is in general low. The MDEA system, for example, is specified in the Koppers-Totzek process for the desulfurization of a low-Btu utility gas.

Other processes based on either primary or secondary amines are considered nonselective between H_2S and CO_2 absorption and, consequently, will produce regnerated acid gases with a low H_2S concentration, which would not be suitable as a feed to a Claus plant and must be treated by the more costly Stretford process.

Alknolamines in general are not considered effective in removing carbonyl sulfide. Some carbonyl sulfide is believed to be removed by reaction with amines. Primary amines, such as MEA and DGA, react with COS

TABLE 43. AMINE PROCESSES FOR GAS PURIFICATION[8]

Processes	Absorbent	Developer/Licensee	Commercial Plants in Operation or Under Construction
MEA	Monoethanolamine (MEA)	--	Several hundred units
DEA	Diethanolamine (DEA)	--	Several hundred units
TEA	Triethanolamine (TEA)	--	Not commerically important
MDEA	Methyldiethanolamine (MDEA)	--	Not commercially important
Adip	Diisopropanolamine (DIPA)	Shell Development	130 units
Econamine	2 (2-amineothoxy) ethanol (DGA)	Fluor Enginers and Contructors	19 units
SNPA-DEA[a]	Diethanolamine (DEA)	Ralph M. Parsons	85×10^6 nm^3/day of raw gas[b]
Sulfinol	Diisopropanolamine (DIPA) plus tetrahydrothiophene 1, 1 dioxide (Sulfolane)	Shell Development	More than 100 units

(a) SNPA stands for Societe Nationale des Petrole d'Aquitaine.

(b) Number of units in operation is not available.

to form compounds which cannot be regenerated under normal process conditions. Secondary amines, such as DEA and DIPA, also react with COS to form degradation products. The latter, however, can be decomposed in the normal amine regeneration stage into CO_2, H_2S, and amine.[18] Tertiary amines are believed to be inert to COS.

Gases produced from coal gasification typically contain several hundred ppm of COS. For the manufacture of a high-Btu SNG, the desulfurization requirement is usually specified at a total sulfur level down to a few ppm, which cannot be met by the normal amine-type processes. An exception is the Shell Sulfinol process, in which a physical solvent (Sulfolane) is employed in combination with an amine (DIPA) to provide more efficient removal of COS. The Sulfinol process is, therefore, a combined chemical-physical absorption process, incorporating the advantages of both types of sorbents. It should be noted as a disadvantage that the addition of Sulfolane increases absorption of hydrocarbons. A comparison of the performance of DIPA and combined DIPA and Sulfolane is given in Table 44 reported for operation of typical Shell ADIP and Sulfinol processes for purification of synthesis gases. Comparable performance in terms of CO_2 removal and desulfurization would be expected for application in coal gasification processes.

Use of amine processes for gas purification in coal gasification processes will depend upon the capability of individual processes for removing COS and selectivity toward H_2S removal. For high-Btu SNG application, amine processes in general cannot effectively remove COS and consequently are not expected to be in significant usage. An exception is the Shell Sulfinol process which has the capability for removing COS and other sulfur compounds beside H_2S. The Sulfinol process, however, has a low selectivity toward H_2S removal and will be unable to produce a concentrated H_2S stream suitable for a Claus plant feed. For low-Btu utility gas manufacture, tertiary amines, such as TEA and MDEA, have the potential for commercial application because of their capability for selective H_2S removal, whereby the CO_2 content of the fuel gas remains substantially unchanged and also the regenerated acid gases are enriched with H_2S for sulfur recovery by the Claus process.

TABLE 44. TYPICAL OPERATING DATA FOR SHELL ADIP AND SULFINOL PROCESSES FOR PURIFICATION OF SYNTHESIS GASES[18]

	Gas Composition, mole percent			
	ADIP		Sulfinol	
Gases Removed	Inlet	Outlet	Inlet	Outlet
CO_2	5.5	NA	5.2	25 ppm
H_2S	0.5	2 ppm	0.36	0.5 ppm
COS	200 ppm	100 ppm	125	0.4 ppm

Alkaline Salt Solution Processes

Processes in this group rely upon chemical absorption of acid gases using alkaline salt solutions. Commercially important processes listed in Table 45, include the hot potassium carbonate and the Alkazid processes.

Hot Potassium Carbonate Process

The hot potassium carbonate process for commercial application was originally developed by the U.S. Bureau of Mines at Bruceton, Pennsylvania, and used for bulk removal of CO_2 from a synthesis gas as part of work on liquid-fuel synthesis from coal.[19] The process has been widely used in the petroleum industry for removing CO_2 and H_2S from synthesis gas, hydrogen, SNG, and natural gas. Since the original process came into being, two improved versions of the process based on the use of catalysts to promote the overall rate of CO_2 absorption and regeneration have been developed under the name of the Benfield and the Catacarb processes.

The chemistry involved in the uncatalyzed potassium carbonate process is shown below.[17]

$$H_2O + K_2CO_3 \rightleftarrows KOH + KHCO_3$$

$$CO_2 + KOH \rightleftarrows KHCO_3$$

$$H_2S + KOH \rightleftarrows KHS + H_2O.$$

The Benefield process is believed to be based on the use of diethanolamine as the catalyst and involve the following reactions for CO_2 removal:[17]

$$CO_2 + R_2NH \rightleftarrows R_2NCOOH$$

$$R_2NCOOH + KOH \rightleftarrows R_2NH + KHCO_3.$$

The process scheme for potassium carbonate systems is similar to that of amine systems, involving absorption and regeneration stages. The potassium carbonate systems, however, are operated at relatively high absorber temperatures typically in the neighborhood of 93 to 121 C (200 to 250 F), which permits considerable savings from elimination of heat exchangers

TABLE 45. ALKALINE SALT SOLUTION PROCESSES FOR ACID GAS REMOVAL[8]

Process	Developer/Licensee	Commercial Units in Operation or Under Construction
Benfield	Benfield	More than 250 operating units, including 18 for natural gas sweetening, and over 150 units for CO_2 scrubbing of reformed and partial oxidation gases
Catacarb	Eickmeyer & Associates	73 in operation or under construction, including 34 units for ammonia production, 32 units for hydrogen production, and the remaining units for natural gas and SNG treatment
Alkazid	I. G. Farben, Davy Powergas	Over 80 in operation

and low steam and cooling water requirements.[20] The process is considered economical at an absorber pressure of 21 atm (300 psig) or higher, since solution regeneration is accomplished in part by flashing of the rich solution.

An important advantage of the hot carbonate process as applied to treating sour gas from coal gasification is the capability of the process for removing carbonyl sulfide by hot alkaline solutions without significant solution degradation. Carbonyl sulfide is removed by hydrolysis by the following reaction:

$$COS + H_2O \rightleftarrows CO_2 + H_2S \ .$$

Carbon disulfide and mercaptans are not removed to any great extent except by physical absorption which is expected to be small.[21]

A disadvantage of the potassium carbonate process is contamination of carbonate solutions which has a depressing effect on the solution activity.[22] Contaminants usually found from plant operations are potassium formate and sulfate. Formate results from a very slow reaction of carbon monoxide with hydroxyl ions catalyzed by traces of oxygen. Sulfate is produced by oxidation of hydrogen sulfide. Traces of oxygen involved in both reactions can be introduced to coal gases from air-saturated water employed for direct-contact cooling and scrubbing of raw gases. Use of catalysts in the Catacarb and the Benfield processes is designed to offset degradation of solution activity by promoting the absorption and desorption of carbon dioxide.

The Catacarb process was developed by A. G. Eickmeyer and currently licensed by Eickmeyer and Associates in the U.S. At present, there are 73 Catacarb plants in operation or under construction worldwide[23]. A great majority of the plants are employed for removal of CO_2 in the manufacture of hydrogen and ammonia synthesis gas. According to Eickmeyer,[23] the Catacarb process can be designed for selective removal of H_2S in treating sour gas from coal gasification. For example, a feed gas containing 1 percent H_2S and 18 to 20 percent CO_2 can be treated to yield an H_2S-rich gas, containing 27 percent H_2S, suitable for a Claus plant feed. Hot potassium carbonate process in general is not considered

selective for H_2S removal. Selectivity is achieved in the Catacarb process by changing operating conditions and solution compositions. The Catacarb process has been employed also for treating sour natural gas for CO_2 and H_2S removal. In a typical natural gas sweetening application at the Brega plant in Libya, the H_2S removal was from 0.79 percent in the feed down to 2.3 ppm and CO_2 removal from 1.4 percent to 20 ppm.[24]

The Benfield process also employs a proprietary catalyst to promote absorption of CO_2 into a hot potassium carbonate solution. The process is used for the removal of CO_2, H_2S, and COS from sour natural gas and substitute natural gas. The process is claimed to have capabilities for H_2S removal to below 1 ppm and for selective removal of H_2S.[25] The Benfield process is used in the Lurgi coal gasification plant in Westfield, Scotland, for gas purification in the manufacture of a town gas.

Alkazid Process

The process was developed by I. G. Farben Industries in Germany and licensed in the U.S. by Davy Powergas, Inc. Three types of absorbents are used in the process, all of which employ a combination of the salt of a strong inorganic base and a weak, organic, nonvolatile acid.[17]

(1) Alkazid "M", containing sodium alanine, is used for removing CO_2 alone or simultaneous removal of CO_2 and H_2S
(2) Alkazid "DIK", containing the potassium salt of diethyl glycine or dimethyl glycine, is used for selective removal of H_2S in the presence of CO_2
(3) Alkazid "S", containing a mixture of phenolate, is used for gases containing appreciable amounts of impurities, such as HCN, ammonia, carbon disulfide, and mercaptans.

The process is used extensively in Europe, with over 80 commercial installations in operation today. Typical performance data for a unit installed by Davy Powergas for selective removal of H_2S from an ammonia

synthesis gas are shown in Table 46. The synthesis gas is produced by Winkler coal gasification.

Davy Powergas also offers a process for removing COS for use in combination with the Alkazid process for desulfurization.[26] The process is based on a gas-phase, catalytic hydrolysis of COS. Typical operating data for a COS hydrolysis unit used in the manufacture of CO from coke are shown in Table 47. There are five such units currently operating in Europe. The performance of the COS hydrolysis process for gas streams containing high CO_2 concentrations is not known.

The Alkazid process and the COS hydrolysis process can be considered commercially viable for application in coal gasification processes. The Alkazid process can be used for fuel-gas desulfurization in the manufacture of a low-Btu utility gas to a residual H_2S concentration in the neighborhood of 50 ppm. Removal of COS can be also accomplished by the hydrolysis process as required, depending upon the COS concentration in the raw gas, to reduce the overall sulfur content of fuel gas to around 250 ppm or lower. The Alkazid process also shows a good selectivity for H_2S removal and therefore should be able to produce an H_2S-rich stream suitable for a Claus plant feed.

For SNG manufacture from coal gasification, the Alkazid process will require a catalyst guard to remove the residual sulfur to a level required for methanation.

Utilities Requirements

Utilities requirements estimated for acid-gas removal processes are given in Tables 48 and 49. The increased pollutant emission--particulates, sulfur oxides and nitrogen oxides--from a boiler which burns coal can be estimated by using energy conversion efficiencies of 34 percent for generation of electricity and 85 percent for generation of steam, and the emission factors established by the EPA.[26a] Boiler stack emissions without control equipment were estimated as follows:

Pollutant	Emissions	
	kg/kwh electricity	kg/10^6 kcal steam
Particulate	20 A/H	9,400 A/H
Sulfur oxides	48 S/H	22,000 S/H
Nitrogen oxides	23 /H	11,000/H

where A = ash content of coal, percent by weight
H = heating value of coal, kcal/kg
S = sulfur content of coal, percent by weight

TABLE 46. TYPICAL OPERATING DATA FOR ALKAZID PROCESS FOR PURIFICATION OF AMMONIA SYNTHESIS GAS[26]

Gas Flow - 37,600 nm^3/hr
Temperature - 40 C
Pressure - 13.6 atm

Gases	Gas Composition, mole percent	
	Inlet	Outlet
H_2S	0.18	56 ppm
CO_2	14.0	13.7

TABLE 47. TYPICAL OPERATING DATA FOR COS HYDROLYSIS PROCESS FOR PURIFICATION OF CARBON MONOXIDE FROM COKE[26]

Gas Flow - 20,400 nm^3/hr
Temperature - 40 C
Pressure - 1.26 atm

Gases	Gas Composition, mole percent	
	Inlet	Outlet
CO	97	NA
CO_2	0.3	NA
H_2	1.2	NA
CH_4	0.3	NA
N_2	1.2	NA
H_2S	0.1315	NA
COS	558 ppm	19 ppm

TABLE 48. UTILITIES REQUIREMENT FOR ACID-GAS REMOVAL PROCESSES

Basis: 63×10^9 kcal/day SNG Production from Illinois No. 6 Coal (3.93 percent sulfur) by the Hygas Process)

Process	Electricity, kwh/10^6 kcal[a]	Steam, 10^6 kcal/10^6 kcal[a]	10^3 1/10^6 kcal[a]
Selexol[8]	3.0	0.055	11
Rectisol[8]	3.2	0.0037	2.7
Purisol[13]	3.6	0.011	0.68
Fluor Solvent[15]	6.3	0.027	0.78
Sulfinol[8]	5.2	0.15	15
Hot Potassium Carbonate[b][8]	6.7	0.11	7.5

(a) Based on the total HHV of SNG product.

(b) Includes Benfield and Catacarb processes.

TABLE 49. UTILITIES REQUIREMENT FOR MDEA PROCESS FOR DESULFURIZATION OF LOW BTU GAS[17]

Basis: 32.8×10^9 kcal/day Low-Btu Utility Gas Production from Eastern Coal (1.08 percent sulfur) by Koppers-Totzek Process

Item	Consumption
Electricity, kwh/10^6 kcal[a]	0.35
Steam, 10^6 kcal/10^6 kcal[a]	0.11
Cooling water, 10^3 l/10^6 kcal[a]	9.0

(a) Based on the total HHV of low-Btu gas product.

SULFUR RECOVERY PROCESSES

Recovery of elemental sulfur is considered desirable in coal gasification processes for producing a salable by-product as well as for controlling sulfur emissions. Commercially important processes which recover elemental sulfur from sulfur-bearing gases include the Claus process, the Stretford process, and the Giammarco-Vetrocoke listed in Table 50. All three processes are designed normally to convert hydrogen sulfide in the feed gas to sulfur, although the Claus process can be operated with a mixture of hydrogen sulfide and sulfur dioxide in the feed gas as proposed in the Hygas process.

In many coal gasification processes, the Claus plant will be used to treat the acid gases removed from fuel gases. A separate acid-gas removal stage is required to provide the feed to the Claus plant. Selective removal of H_2S is an important consideration in the acid-gas removal stage to provide a Claus plant with a feed containing a reasonably high H_2S concentration usually above 10 to 15 percent, for efficient operation of the Claus plant. In contrast, The Stretford process and the Giammarco-Vetrocoke process can be operated efficiently with a feed containing low H_2S concentrations. Furthermore, the latter processes can be used to remove H_2S directly from fuel gases and convert it to sulfur, thereby eliminating the need for a separate H_2S removal stage. The Giammarco-Vetrocoke process has an additional capability for simultaneous removal of H_2S and CO_2. The Stretford process is not applicable to bulk CO_2 removal.

Claus Process

There are four principal variations used for recovering sulfur in Claus sulfur plants in the United States:

(a) Direct oxidation

(b) Split flow

(c) Straight through

(d) Sulfur recycle.

TABLE 50. SULFUR RECOVERY PROCESSES[8, 27, 28, 29]

Process	Developer/Licensee	Commercial Units in Operation or Under Construction
Claus	--	More than 150 units in operation in the U.S.
Stretford	British Gas, J. F. Pritchard, Peabody Engineered Systems, Ralph M. Parsons	53 units in operation
Giammarco-Vetrocoke	Davy Powergas	30 units in operation

Beers[27] summarizes the technology for all four variations and presents cost estimates.

Claus sulfur plants usually operate near atmospheric pressure with only enough extra pressure to overcome the pressure drop through the plant. The optimum process arrangement (variation) for a Claus plant depends largely on the hydrogen sulfide concentration in the acid gas feed. For high H_2S concentrations, such as 90 mole percent, the "straight through" process is preferred. For intermediate concentrations, such as 50 mole percent H_2S, the "split flow" process is suitable. For low H_2S concentrations, such as 15 mole percent as obtained in coal conversion processes, the "direct oxidation" process or sometimes the "sulfur recycle" process would be used.

Claus Plant Variations Used With Low H_2S Feed Concentrations

Direct Oxidation. In the original Claus process, called direct oxidation, H_2S is partially oxidized with air over a bauxite or iron ore catalyst in a single reactor as follows:

$$3H_2S + 3/2\ O_2 \rightarrow 3S + 3H_2O \quad .$$

This process is used in modern plants having dilute acid gas feed. Since the H_2S concentration is low, an auxiliary fuel and air are fed to a burner for partial oxidation prior to the catalytic bed. Since the Claus reaction is highly exothermic and the equilibrium shifts at high temperature, excessive temperatures in the catalytic beds lead to poor yields. Partial recycle of the tail gas is often practiced to control temperatures for acceptable yields.

Goar[30] reports that the Pan American Petroleum Corporation has developed a version of the direct oxidation process to handle acid gas streams containing as little as 2 mole percent H_2S and relatively large amounts of light hydrocarbons. In this process, the acid gas feed is preheated and passed through one or more stages of catalytic conversion with sulfur condensation steps after each conversion stage. Sulfur recovery of

80 to 85 percent is usually obtained. Unsaturated hydrocarbons affect the process adversely and only traces of these can be tolerated. Therefore, the direct oxidation process may be particularly well suited for handling acid gas streams from coal conversion processes if they contain unsaturated hydrocarbons.

Several known plants utilizing this process have been reported by Goar.[30]

(1) A 4-LTPD plant which handles acid gas containing 10 mole percent H_2S, 90 mole percent CO_2, and less than 1 mole percent hydrocarbons. Bright yellow sulfur is produced and the plant is skid mounted.

(2) A 15-LTPD plant - the acid gas to this plant contains 9 mole percent H_2S, 90 mole percent CO_2, and some heavy hydrocarbons. A charcoal adsorber unit was installed ahead of the sulfur plant. This sulfur is used to make sulfuric acid.

(3) A 12-LTPD plant which processes acid gas containing 7 mole percent H_2S, 71 mole percent CO_2, about 17 mole percent methane, 1 mole percent ethane and 4 mole percent propane to heptanes plus other hydrocarbons. Bright yellow sulfur is produced.

Sulfur Recycle. One Claus plant variation, particularly useful for dilute acid gas having low sulfur oxide content is called "sulfur recycle". In this scheme, some product sulfur is recycled back to the front of the Claus plant and burned with air to produce SO_2 and heat. This technique is limited by the fact that the ratio of H_2S/SO_2 in the feed to the first catalytic reactor should be in the ratio of approximately 2:1.

Efficiency of Claus Plant Operation

The operating efficiency of Claus plants for sulfur recovery is influenced by feed gas composition and the number of reactors employed. The concentrations of H_2S, CO_2, H_2O, and hydrocarbons in the feed have pronounced effect on the recovery efficiency. Carbon dioxide and hydrocarbons react with hydrogen sulfide and elemental sulfur to produce COS and CS_2 which end up in the tail gas, thereby, reducing the efficiency. According to Barry,[4] the typical sulfur-recovery efficiencies of Claus plants operated with two reactors as a function of H_2S concentration in feed gas are as follows.

H_2S in Feed percent (dry basis)	Sulfur Recovery percent
20	92.7
30	93.1
40	93.5
50	93.9
60	94.4
70	94.7
80	95.0
90	95.3

Efficiency is reduced further at lower H_2S concentrations, falling to 80 to 90 percent at 10 percent H_2S and to 70 to 85 percent at 5 percent H_2S.[3]

Problems in Adopting Claus Plants to Coal Conversion Processes

The following problems are apparent in adapting Claus plant technology to recovery of sulfur in coal conversion processes:

(1) The most important problem appears to be that the H_2S feed concentration to the Claus plant is low, perhaps 5 to 30 percent H_2S. In most Claus plants found in oil refineries and natural gas recovery, H_2S feed composition range from a low of 20 to 25 percent to as high as 90 percent. Thus, the most widely used designs, i.e., the "straight through" and split flow designs cannot normally be used.

(2) The high CO_2 concentration in the feed leads to the formation of carbonyl sulfide COS, which is difficult to convert to elemental sulfur.

(3) Since the acid gas feed composition to the Claus plant is low, the conversion efficiency will be low, say 80 to 85 percent rather than 90 to 95 percent conversion obtained in plants with high H_2S feed compositions.

Stretford Process

The process removes H_2S selectively from a sour gas stream and converts it into elemental sulfur in one step, using an aqueous solution containing sodium carbonate, a soluble vanadium salt, anthraquinone disulfonic acid (ADA), and a sequestering agent. The chemistry of the process is represented by the following reactions:[31]

Absorption of H_2S: $H_2S \rightarrow HS^- + H^+$

Precipitation of sulfur: $HS^- + 2V^{+5} \rightarrow 2V^{+4} + H^+ + S^o$

Regeneration of V^{+5}: $2V^{+4}$ + ADA (oxidized) + $2H^+ \rightarrow 2V^{+5}$ + ADA (reduced)

Regeneration of ADA: ADA (reduced) + 1/2 $O_2 \rightarrow$ ADA (oxidized) + H_2O .

The process was originally developed by the Northwest Gas Board in Great Britain. Licensees in the United States include Peabody Engineered Systems, J. F. Pritchard, and Ralph M. Parsons. An improved version of the Stretford process is offered by Peabody Engineered Systems under the name of the Holmes-Stretford process. As of January, 1973, a total of 53 plants were in operation worldwide, of which 31 use the Holmes-Stretford process. There are two plants in the United States using the Homes-Stretford process.[29]

The Holmes-Stretford process includes two proprietary subsystems: (1) a feed-gas pretreatment step for the removal of HCN, tars, and ashes, using an ammonium or sodium polysulfide wash, and (2) treatment of purge liquor from the process for the removal of byproducts, such as sodium thiosulfate and sodium thiocyanate. Alternative methods developed and piloted for purge-liquor treatment include: (1) evaporation or spray drying, (2) biological degradation, (3) oxidative combustion, and (4) reductive incineration. Reductive incineration is claimed to be a zero-discharge process, whereby the purge liquor is treated in a furnace with reducing gases and reduced chemicals are recycled to the process sequence.

The Holmes-Stretford process guarantees H_2S removal to less than 10 ppm. Mercaptans are claimed also to be removed. Carbonyl sulfide and carbon disulfide cannot be removed. Typical operating conditions of the Holmes-Stretford process are as follows.[29]

Feed gas capacity: 0.003 to 5.4 million nm^3/day (0.1 to 190 million scf/day)

Inlet H_2S concentration: 0.03 to 95 percent

Outlet H_2S concentration: 1 to 500 ppm

Pressure: 1 to 7.8 atm (0 to 100 psig)

Sulfur production: 0.5 to 76 MT/day (0.5 to 75 long tons/day)

CO_2 partial pressure: 0.01 to 1.1 atmosphere

Inlet HCN concentration: 500 to 2,000 ppm.

The Holmes-Stretford process is used at present for desulfurization of coke-oven gas, coal gas, producer gas, natural gas, and reformed town gas from petroleum. The process can be considered a commercially proven process for potential application in coal gasification processes. Potential application include direct desulfurization of a low-Btu gas and desulfurization of an acid gas stream ($H_2S + CO_2$) regenerated from acid-gas removal processes which are nonselective for H_2S and consequently produce a gas stream not suitable for a Claus plant feed.

Giammarco-Vetrocoke Processes

The process was originally developed in Europe for removal of CO_2 using an arsenic trioxide activator in potassium carbonate. The original process has been modified to permit a simultaneous removal of H_2S and CO_2 or a selective removal of H_2S. The process for a selective removal of H_2S is based on the absorption and reaction of H_2S in alkaline arsenites and arsenates. The process chemistry is represented by the following reactions:[17]

Absorption: $KH_2AsO_3 + 3H_2S \rightarrow KH_2AsS_3 + 3H_2O$

Digestion: $KH_2AsS_3 + 3KH_2AsO_4 \rightarrow 3KH_2AsO_3S + KH_2AsO_3$

Acidification: $3KH_2AsO_3S \rightarrow 3KH_2AsO_3 + 3S$

Oxidation: $6KH_2AsO_3 + 3O_2 \rightarrow 6KH_2AsO_4$.

For simultaneous removal of H_2S and CO_2, a separate stage for CO_2 removal is added to an H_2S-removal stage. The chemistry for CO_2 removal is represented by the following reactions:

Absorption: $2K_3AsO_3 + 6CO_2 + 3H_2O \rightarrow 6KHCO_3 + As_2O_3$

$K_2CO_3 + CO_2 + H_2O \rightarrow 2KHCO_3$

Regeneration: $6KHCO_3 + As_2O_3 \rightarrow 2K_3AsO_3 + 6CO_2 + 3H_2O$

$2KHCO_3 \rightarrow K_2CO_3 + CO_2 + H_2O$.

There are over 180 commercial installations for CO_2 removal and about 30 installations for H_2S removal in operation today. A great majority of these installations are located in Europe. One plant is in operation in the United States for the removal of CO_2 and H_2S from natural gas.

An important advantage of the Giammarco-Vetrocoke processes is the capability for a highly selective removal of H_2S or a simultaneous removal of both CO_2 and H_2S. The processes also have the combined capability of gas purification and recovery of elemental sulfur. A major drawback of the processes is the use of the arsenic activators, which are a potential source of hazardous material release. According to Davy Powergas, Inc.,[26] which is a U.S. licensee of the processes, the hazard problem will seriously limit the application of the processes in coal gasification processes.

Utilities Requirements

Utilities requirements estimtted for sulfur recovery processes are presented in Table 51.

TABLE 51. UTILITIES REQUIREMENT FOR SULFUR RECOVERY PROCESSES

Process	Electricity, kwh/10^6 kcal[a]	Steam, 10^6 kcal/10^6 kcal[a]	Fuel Gas, 10^6 kcal/10^6 kcal[a]	Cooling Water, 10^3 l/10^6 kcal[a]
Claus[b][27]	2.8	(0.014)[c]	0.0013	None
Holmes-Stretford[d][29]	2.0	0.0013	43×10^{-6}	0.027

(a) Based on total HHV of product gas.

(b) Basis: 63×10^9 kcal/day SNG production from Illinois No. 6 coal (3.93 percent sulfur) by the Hygas process.

(c) Net steam production.

(d) Basis: 32.8×10^9 kcal/day low-Btu gas production from Navajo Seam coal (0.69 percent sulfur) by the Hygas process.

TREATMENT OF CLAUS PLANT TAIL GAS

The Claus process is used widely in the petroleum industry for treating sour gases generated from the purification of refinery fuel and natural gas, to produce elemental sulfur from hydrogen sulfide. The tail gas from the Claus plant contains unconverted H_2S and SO_2 and lesser quantities of other sulfur constituents, such as COS, CS_2, and elemental sulfur vapor and particles. The tail gas from typical Claus plant operations contains about 1 to 2 percent total sulfur. The normal practice in the past has been to discharge the tail gas directly to atmosphere after passing it through an incinerator to convert sulfur compounds into sulfur dioxide. During the past several years, a number of treatment processes have appeared for removing the residual sulfur compounds from the tail gas. Tail gas treatment processes which have received commercial acceptance are listed in Table 52.

Beavon Process

Desulfurization of tail gas from a Claus plant is accomplished in two stages. In the first stage, sulfur constituents in the tail gas such as SO_2, COS, CS_2, and elemental sulfur are converted to H_2S by hydrogenation and hydrolysis using a packed-bed catalytic reactor. In the second stage, H_2S is removed and converted to elemental sulfur by the Stretford process.

The Beavon process can be considered a commercially-proven process for potential application in coal gasification processes. The Beavon process would be installed unstream of the incinerator in a conventional Claus plant. The tail gas from the Beavon process would be incinerated to convert residual sulfur into sulfur dioxide before discharge to atmosphere. Typical performance data for the Beavon process applied to the Hygas process for SNG manufacture from Illinois No. 6 coal are given in Table 53. The Beavon process can reduce the Claus tail gas emissions from 1.23 percent SO_2 to 250 ppm SO_2, which corresponds to 0.72 kg S/10^6 kcal (0.40 lb S/10^6 Btu) of SNG produced and 0.012 kg S/10^6 kcal 0.0065 lb S/10^6 Btu) of SNG produced, respectively.

TABLE 52. CLAUS PLANT TAIL GAS TREATMENT PROCESSES[32]

Process	Developer/Licensee	Commercial Units in Operation or Under Construction
Beavon	Union Oil, Ralph M. Parsons	7 in operation and 6 under construction
Cleanair	J. F. Pritchard, Texas Gulf Sulfur	1 in operation and 3 under construction
IFP-1	Institut Francais du Petrole	12 in operation and 5 under construction
SCOT	Shell Development	2 in operation and 6 under construction
Sulfreen	Lurgi, SNPA*, Ralph M. Parsons	3 in operation and 4 under construction
Wellman-Lord	Davy Powergas	2 in operation and 6 under construction

* Societe Nationale des Petrole d'Aquitaine.

TABLE 53. SULFUR BALANCE AROUND A CLAUS UNIT AND AROUND A CLAUS UNIT PLUS A BEAVON UNIT[3]

Basis: 63×10^9 kcal/day SNG Production from Illinois No. 6 Coal (3.93 percent coal)

	Feed to Claus	Tail Gas from Claus[a]	Tail Gas from Claus + Beavon	Sulfur Recovered[b]
Total Gas Flow, 10^6 nm^3/hr	0.0730	0.114	0.0906[c]	--
Sulfur Compounds, mole percent				
H_2S	19.89	--	--	--
COS	0.086	--	--	--
SO_2	5.78	1.23	250 ppm	--
Sulfur in Stream				
kg/hr	25,400	1,890	31	25,400
kg/10^6 kcal[d]	9.7	0.72	0.012	--

(a) After incineration.

(b) From Claus plus Beavon

(c) Estimated from data given in Reference 32.

(d) Based on the total HHV of SNG product.

Cleanair Process

The process removes sulfur constituents in Claus tail gas and recovers elemental sulfur using three stages.[8] In operation, the Claus tail gas is treated first by Stage III, which removes COS and CS_2. Stage III is a fixed-bed reactor containing both a reduction catalyst (thought to be Co/Mo) and a hydrolysis catalyst (unknown).[32] Carbon dioxide is also decomposed to CO in the fixed-bed reactor to prevent the reoccurrence of COS. Stage I, which follows Stage III, is a packed-bed scrubber in which elemental sulfur is recovered and all SO_2 and some H_2S are absorbed and converted to sulfur via continuation of the Claus-type reaction. Stage II is the Stretford process which converts the residual H_2S to sulfur.

The Cleanair process can treat Claus tail gas to levels of not more than 200 ppm SO_2 equivalent in the effluent.[8] Detailed performance data, such as material balance for sulfur constituents are not available. The process can be considered a commercially-proven process for potential application in coal gasification processes to treat Claus tail gas. The process would be installed upstream of the incinerator in a conventional Claus plant. The tail gas from the Cleanair process would be incinerated to convert residual sulfur constituents into SO_2 before discharge to atmosphere.

IFP-1 Process

In this process, a Claus tail gas is fed to an absorber where H_2S and SO_2 are absorbed and converted to elemental sulfur by the Claus-type reaction. The sorbent is a high-boiling polyglycol containing mixed alkali metal salts of an organic acid as a catalyst.[32] The process is capable of removing elemental sulfur, H_2S, and SO_2 among the sulfur constituents of Claus tail gas. Other constituents, such as COS and CS_2, are not removed.

The IFP-1 process can be considered a commercially-proven process for application in coal gasification processes for treating Claus tail gas. A major limitation of the process is that COS and CS_2 are not removed. Typical performance data for the IFP-1 process applied to the Hygas process for SNG manufacture from Illinois No. 6 coal are given in Table 54. The IFP-1 process can reduce the Claus tail gas emissions from 1.23 percent SO_2 to 0.19 percent SO_2, which corresponds to 0.72 kg S/10^6 kcal (0.40 lb S/10^6 Btu) of SNG produced and 0.11 kg S/10^6 kcal SNG produced, respectively.

SCOT Process

The process consists of a reduction section and an alkanolamine absorption section. In the reduction section, sulfur constituents in Claus tail gas are reduced to H_2S with hydrogen or hydrogen together with carbon monoxide over a cobalt/molybdenum catalyst (Shell catalyst S-534) at a temperature of about 300 C.[32] The H_2S is then removed in the absorption section by using di-ispropanolamine (DIPA).

In the absorption stage, CO_2 is coabsorbed with H_2S in the amine solution. The coabsorbed CO_2 is regenerated with H_2S and the mixture is recycled to the Claus plant. The extent of CO_2 coabsorption depends on the concentration of CO_2 in the Claus tail gas. For typical refinery applications, about 25 to 39 percent of CO_2 in the Claus tail gas is coabsorbed with 5 to 10 percent CO_2 in the tail gas.[34] In coal gasification applications, the CO_2 concentration is expected to be much higher, in the range of 40 to 70 percent.[3] Consequently, a substantially greater percentage of CO_2 in the Claus tail gas will be coabsorbed and recycled to the Claus plant which will lower the efficiency of the Claus plant operation. For this reason, the SCOT process is not expected to find a significant usage in coal gasification processes for the treatment of Claus tail gas, unless the CO_2 concentration in the tail gas is reduced to an acceptable level in the neighborhood of 5 to 10 percent.

TABLE 54. SULFUR BALANCE AROUND A CLAUS UNIT AND AROUND A CLAUS UNIT PLUS AN IFP-1 UNIT[3,33]

Basis: 63 x 10^9 kcal/day SNG Production from Illinois No. 6 Coal (3.93 percent coal)

	Feed to Claus	Tail Gas from Claus[a]	Tail Gas from Claus + IFP-1[a]	Sulfur Recovered[b]
Total Gas Flow, 10^6 nm^3/hr	0.0730	0.113	0.113	--
Sulfur Compounds, mole percent				
H_2S	19.89	trace	trace	--
COS	0.086	trace	trace	--
SO_2	5.78	1.23	0.19	--
Sulfur in Stream				
kg/hr	25,400	1,890	290	25,100
kg/10^6 kcal[c]	9.7	0.72	0.11	--

(a) After incineration.

(b) From Claus plus IFP-1500.

(c) Based on the total HHV of SNG product.

Sulfreen Process

This process employs two stages for removing sulfur constituents from Claus tail gas. The first stage removes elemental sulfur by contacting the feed gas with liquid sulfur.[32] The second stage consists of a series of catalytic reactors where the Claus reactions are promoted at lower temperatures 127 to 149 C (260 to 300 F) than those employed in the Claus plant. The Claus reactions do not remove COS or CS_2 which is a main disadvantage of the Sulfreen process.

The Sulfreen process can be considered a commercially-proven method for potential application for treating Claus tail gas in coal gasification processes with a limited capability for COS and CS_2 removal. Typical performance data for the Sulfreen process applied to the Hygas process for SNG manufacture from Illinois No. 6 coal are given in Table 55. The Sulfreen process can reduce Claus tail gas emissions from 1.23 percent SO_2 to 0.35 percent SO_2, which corresponds to 0.72 kg S/10^6 kcal (0.40 lb S/10^6 Btu) SNG produced and 0.2 kg S/10^6 kcal (0.12 lb S/10^6Btu) SNG produced, respectively.

Wellman-Lord Process

This process removes SO_2 from the off gas from a Claus plant incinerator using an aqueous regenerative absorbent. The sulfur constituents in the Claus plant tail gas are converted to SO_2 in the incinerator. The absorbent employed is a solution of sodium sulfite, which reacts with SO_2 to produce sodium bisulfite. The SO_2-rich solution is decomposed by heat to regenerate the absorbent and SO_2. The regenerated SO_2 is recycled to the Claus plant.

The Wellman-Lord process can be considered one of the commercially-proven processes for potential application in coal gasification processes for testing Claus plant tail gas. Typical performance data on the process applied to the Hygas process for SNG manufacture from Illinois No. 6 coal are given in Table 56. Sulfur emissions from Claus plant tail gas can be reduced by the Wellman-Lord process from 1.23 percent SO_2 to 250 ppm, which corresponds to 0.72 kg S/10^6 kcal (0.40 lb S/10^6 Btu) SNG produced and 0.015 kg S/10^6 kcal (0.0082 lb S/10^6 Btu) SNG produced, respectively.

Utilities Requirements

Utilities requirements estimated for tail gas treatment processes are given in Table 57.

TABLE 55. SULFUR BALANCE AROUND A CLAUS UNIT AND AROUND A CLAUS UNIT PLUS A SULFREEN UNIT[3,35]

Basis: 63×10^9 kcal/day SNG Production from Illinois No. 6 Coal (3.93 percent coal)

	Feed to Claus	Tail Gas from Claus[a]	Tail Gas from Claus + Sulfreen[a]	Sulfur Recovered[b]
Total Gas Flow, 10^6 nm^3/hr	0.0730	0.114	0.113	--
Sulfur Compounds, mole percent				
H_2S	19.89	trace	trace	--
COS	0.086	trace	trace	--
SO_2	5.78	1.23	0.35	--
Sulfur in Stream				
kg/hr	25,400	1,890	540	24,900
kg/10^6 kcal[c]	9.7	0.72	0.21	--

(a) After incineration.

(b) From Claus plus Sulfreen.

(c) Based on the total HHV of SNG product.

TABLE 56. SULFUR BALANCE AROUND A CLAUS UNIT AND AROUND A CLAUS UNIT PLUS A WELLMAN-LORD UNIT[3]

Basis: 63×10^9 kcal/day SNG Production from Illinois No. 6 Coal (3.93 percent coal)

	Feed to Claus	Tail Gas from Claus[a]	Tail Gas from Claus + W-L	Sulfur Recovered[b]
Total Gas Flow, 10^6 nm^3/hr	0.0730	0.114	0.114	--
Sulfur Compounds, mole percent				
H_2S	19.89	trace	trace	--
COS	0.086	trace	trace	--
SO_2	5.78	1.23	250 ppm	--
Sulfur in Stream				
kg/hr	25,400	1,890	39	25,400
kg/10^6 kcal[c]	9.7	0.72	0.015	--

(a) After incineration.

(b) From Claus plus Wellman-Lord.

(c) Based on the total HHV of SNG product.

TABLE 57. UTILITIES REQUIREMENT FOR CLAUS PLANT TAIL GAS TREATMENT PROCESSES

Basis: 63×10^9 kcal/day SNG Production from Illinois No. 6 Coal (3.93 percent sulfur) by the Hygas Process

Process	Electricity, kwh/10^6 kcal[a]	Steam, 10^6 kcal/10^6 kcal[a]	Fuel Gas, 10^6 kcal/10^6 kcal[a]	Cooling Water, 10^3 l/10^6 kcal[a]
Beavon[27,32]	1.1	(0.0019)[b]	0.0038	0.20
Cleanair[27]	0.11	0.00059	None	0.60
IFP-1[27]	0.056	None	None	None
Sulfreen[32,35]	0.23	(0.0012)[b]	0.0010	None
Wellman-Lord[32]	0.27	(0.0049)[b]	0.0045	0.42

(a) Based on the total HHV of SNG product.

(b) Net steam production.

CONCLUSIONS

Based on the information presented in preceding sections of this report, conclusions are presented below on the sources and types of sulfurous emissions and applicable control methods for process sequence in coal gasification.

Coal Preparation

The only data available for this source are for the CO_2-Acceptor process for SNG manufacture. For a plant producing 62.5 x 10^9 kcal/day (248 x 10^9 Btu/day) of SNG from North Dakota lignite (0.59 percent sulfur), the coal preparation stage emits about 61 x 10^6 nm^3/day (2200 x 10^6 scf/day) of an off gas containing 300 ppm of SO_2.[3] The equivalent sulfur emissions are 25.0 MT/day (22.6 tons/day) sulfur or 0.23 kg S/10^6 kcal (0.13 lb sulfur/10^6 Btu) of SNG produced. Available process design schemes are based on venting the off gas from coal preparation directly to the atmosphere.

Fuel Gas Purification

Manufacture of High-Btu SNG

For SNG manufacture, the fuel gas must be purified to remove sulfur compounds and CO_2 prior to methanation. Two alternatives exist for gas purification: (1) selective removal of H_2S and other minor sulfur compounds or (2) simultaneous removal of CO_2 together with sulfur compounds.

The first alternative produces two acid-gas streams, an H_2S-rich stream which usually can be sent to a Claus plant for sulfur recovery and a second stream which is mostly CO_2. The H_2S stream contains the bulk of the sulfur originally present in the fuel gas and will not be

discharged to the atmosphere without further treatment for sulfur removal. The CO_2 stream contains a small quantity of sulfur compounds. Available data on the sulfur content of the CO_2 stream from the Rectisol process are shown in Table 58. The sulfur content of the CO_2 stream from the Recitisol process is shown to vary with the sulfur content of coal feed. Sulfur is present mostly as COS and lesser quantities of H_2S and CS_2. Available design concepts are based on venting the CO_2 stream directly to atmosphere. Since the sulfur concentration of the CO_2 stream is dependent upon the sulfur content of coal feed, emission standards can be set in terms of the sulfur content of the coal feed.

When CO_2 is removed together with sulfur compounds, the purification stage produces a single off-gas stream containing the bulk of both constituents The present design concept involves treating this stream for desulfurization prior to discharge to atmosphere. This stream, therefore, cannot be considered an emission source in the gas purification stage.

Manufacture of Low-Btu Utility Gas

In the manufacture of a low-Btu utility gas, fuel gas is desulfurized for the purpose of reducing SO_2 emissions from combustion of the fuel gas in a utility boiler. Commercially-proven processes being considered for desulfurization include the Stretford process for the Lurgi gasification process and the MDEA process for the Koppers-Totzek gasification process. Both desulfurization processes are intended for selective removal of H_2S while leaving behind the bulk of the CO_2 in the fuel gas.

The Stretford process is capable of a near quantitative removal of H_2S, but COS is not removed. An improved version of the Stretford process, known as the Holmes-Stretford process, guarantees less than 10 ppm of H_2S in the treated gas. For a Lurgi plant producing 32.8×10^9 kcal/day (130×10^9 Btu/day) of a low-Btu gas from Navajo Seam coal containing a 0.69 percent sulfur, the sulfur content of the fuel gas can be reduced from 2,170 ppm H_2S and 130 ppm COS to 10 ppm H_2S and 130 ppm COS. Corresponding emissions of SO_2 from combustion of the fuel gas in a utility boiler are estimated at 346 ppm SO_2--3.5 kg $SO_2/10^6$ kcal of fuel gas output or 57.7 MT S/day (1.96 lb $SO_2/10^6$ Btu or 63.6 tons S/day)--without desulfurization and

TABLE 58. **SULFUR CONTENT OF CO_2 STREAMS FROM RECTISOL PROCESS FOR GAS PURIFICATION IN SNG MANUFACTURE FROM COAL GASIFICATION**

Process	Sulfur Content of Coal, percent	Sulfur Compounds, ppm			Plant Size, 10^9 kcal/day	Flow Rate of CO_2 Stream, 10^6 nm^3/hr	Sulfur Emission	
		H_2S	COS	CS_2			Metric Tons S/day	kg S/10^6 kcal[a]
Lurgi (El Paso Project)[b]	0.69	8.2	68.1	3.6	69.3	10.92	1.23	0.018
Lurgi (WESCO Project)[36]	0.91	NA	60	NA	61.7	5.97	0.48	0.0079
Hygas	0.51	9	39	NA	63.0	8.46	0.55	0.0088
Hygas	3.93	11	300	NA	63.0	6.76	2.78	0.045

(a) Based on the total HHV of the product gas.

(b) The CO_2 stream is treated by the Stretford process. The stream data refer to the outlet of the Stretford process.

24 ppm SO_2--0.22 kg $SO_2/10^6$ kcal of fuel gas output or 3.5 MT S/day (0.12 lb $SO_2/10^6$ Btu or 3.9 tons S/day)--with desulfurization.

The MDEA process is capable of removing bulk of H_2S and about 75 percent of COS. A unit designed for a Koppers-Totzek plant producing 32.8×10^9 kcal/day (130×10^9 Btu/day) of a low-Btu gas from Eastern bituminous coal containing 1.08 percent sulfur is claimed to be capable of reducing the sulfur content of the fuel gas from 3500 ppm H_2S and 400 ppm COS to 150 ppm H_2S and 100 ppm COS. Corresponding emissions of SO_2 from boiler stacks are estimated at 1,000 ppm SO_2--4.0 kg $SO_2/10^6$ kcal of fuel gas output or 66.4 MT S/day (2.2 lb $SO_2/10^6$ Btu or 73.2 tons S/day)--without desulfurization and 70 ppm SO_2--0.27 kg $SO_2/10^6$ kcal of fuel gas output or 4.3 MT S/day (0.15 lb $SO_2/10^6$ Btu or 4.7 tons S/day)--with desulfurization.

Sulfur content of raw gas is expected to increase in proportion to the sulfur content of coal feed. Residual sulfur level in desulfurized gas will also increase with higher sulfur content of coal. The existing Federal standards for SO_2 emissions for new sources of coal-burning equipment are established at 2.16 kg $SO_2/10^6$ kcal (1.2 lb $SO_2/10^6$ Btu). To comply with the existing Federal standards, the maximum allowable total sulfur levels in fuel gas will be 1400 ppm for the Lurgi gas (with a heating value of 1740 kcal/nm^3 (195 Btu/scf) and 2100 ppm for the Koppers-Totzek gas (with a heating value of 2620 kcal/nm^3 (294 Btu/scf). Corresponding sulfur content of coal which can be allowed for Lurgi-Stretford and Koppers-Totzek-MDEA combinations were estimated by assuming that (1) the Stretford effluent contains 10 ppm H_2S which is independent of sulfur level in the feed gas, and (2) the effluent from the MDEA process contains 150 ppm of H_2S (independent of feed-gas sulfur level) and 25 percent of COS in the feed gas. The maximum sulfur contents allowed for feed coal were estimated at 6.9 percent for a Lurgi-Stretford system and greater than 10 percent for a Koppers-Totzek-MDEA system.

Other desulfurization processes, such as the Rectisol, Purisol, and Selexol processes, are commercially-proven processes potentially available for low-Btu gas application. These processes generally are capable of reducing sulfur content of fuel gas to much lower levels than the Stretford or the MDEA process.

Sulfur Recovery

Acid gases removed from fuel gas in the gas purification stage will be sent to either the Claus process or the Stretford process depending upon the sulfur content of the acid gases. In the gasification processes considered in this task, the Claus process is employed for high-Btu SNG manufacture by the Hygas and the CO_2-Acceptor processes and for low-Btu gas manufacture by the Koppers-Totzek process, and the Stretford process is employed for high-Btu SNG manufacture by the Lurgi and the Synthane processes and for low-Btu gas manufacture by the Lurgi process.

Claus Process

Sulfur emissions from Claus plants for coal gasification processes considered in this task are shown in Table 59. Concentration of SO_2 in tail gas after incineration is shown to be in the neighborhood of 1 to 2 percent. Total sulfur emissions range from about 4.3 to 45 MT/day (5 to 50 tons/day) of sulfur equivalent or about 0.1 to 0.7 kg S/10^6 kcal (0.07 to 0.4 lb S/10^6 Btu) of the fuel value of product gas. The total sulfur emissions are shown to increase with increasing sulfur content of coal feed. The concentration of SO_2 in the range of 1 to 2 percent is too high to allow direct discharge of the tail gas without treatment. Commercially-proven technology is available at present for desulfurization of Claus plant tail gas.

Stretford Process

The Stretford process employed in SNG manufacture produce off-gases, after incineration, containing 420 ppm SO_2 in the Lurgi process and 150 ppm SO_2 in the Synthane process. Corresponding total sulfur emissions are 0.29 MT/day (0.30 ton/day) for the Lurgi process and 1.31 MT/day (1.44 tons/day) for the Synthane process. Available process design schemes are based on discharging the Stretford effluents to atmosphere after incineration.

TABLE 59. SULFUR CONTENT OF TAIL GAS FROM CLAUS PROCESS

Process	Sulfur Content of Coal	SO_2 Concentration[a] in Tail Gas percent	Plant Size, 10^9 kcal/day	Flow Rate of Tail Gas, $10^6 nm^3/hr$	Sulfur Emission	
					Metric Tons S/day	kg S/10^6 kcal[a]
Hygas (SNG)	0.51	1.29	63.0	0.0240	10.1	0.16
Hygas (SNG)	3.93	1.23	63.0	0.114	45.4	0.72
CO_2-Acceptor (SNG)	0.59	0.89	62.5	0.0750	21.8	0.35
Koppers-Totzek (low-Btu gas)	1.08	0.93	32.8	0.0144	4.3	0.13

(a) After incineration.

(b) Based on the total HHV of the product gas.

When the Stretford process is employed for desulfurization of a low-Btu gas, no direct effluent to atmosphere is produced. The effluent from the process is the desulfurized fuel gas as described in the preceding section.

Treatment of Claus Plant Tail Gas

Claus plant tail gases in coal gasification processes typically contain 1 to 2 percent sulfur. Commercially-proven processes are available at present for desulfurizing Claus plant tail gas. Typical performance data expected from tail gas treatment processes when applied to coal gasification processes are shown in Table 60. Tail gas treatment processes are shown to fall into two groups in terms of desulfurization efficiency. The Beavon and the Wellman-Lord processes are capable of reducing sulfur content down to 250 ppm SO_2 in the effluent. The Cleanair process, which is not shown in the table, is expected to provide comparable performance. The IFP-1 and the Sulfreen processes are comparatively less efficient and produce effluents containing about 0.2 to 0.4 percent SO_2.

Other Sources of Sulfurous Emissions

Additional sources of sulfurous emissions in coal gasification processes include off-gases from wastewater treatment and from regeneration of catalyst guards, the latter employed ahead of the methanation stage in SNG manufacture.

Off gases from wastewater treatment are generated at relatively small quantities--28 to 4500 nm^3/hr (0.001×10^6 to 0.16×10^6 scf/hr) but contain 2 to 4 percent H_2S. Available process design information specifies sending these off gases to sulfur recovery processes for desulfurization.

Available design information specifies the use of a catalyst guard for the Synthane, the CO_2-Acceptor, and the Hygas processes for SNG manufacture. Regeneration of the catalyst guard produces an off gas containing sulfur as SO_2. The SO_2 emissions are expected to be low in

TABLE 60. SULFUR CONTENT OF OFF GASES FROM CLAUS PLANT TAIL GAS TREATMENT PROCESSES

Gasification Process	Tail Gas Treatment Process	Sulfur Content of Coal, percent	SO_2 Concentration in Off-Gas, ppm	Plant Size, 10^9 kcal/day	Off-Gas Flow Rate, 10^6 nm^3/hr	Sulfur Emissions, Metric Tons S/day	Sulfur Emissions, kg S/10^6 kcal[a]
Hygas (SNG)	Beavon	3.93	250	63	0.091	0.74	0.012
Hygas (SNG)	IFP-1	3.93	1,900	63	0.113	7.0	0.11
Hygas (SNG)	Sulfreen	3.93	3,500	63	0.113	13.0	0.21
Hygas (SNG)	Wellman-Lord	3.93	250	63	0.114	0.94	0.015
Hygas (SNG)	Wellman-Lord	0.51	250	63	0.024	0.20	0.0031
CO_2-Acceptor (SNG)	Beavon	0.59	250	62.5	0.075	0.61	0.0098
Koppers-Totzek (low-Btu gas)	Beavon	1.08	250	32.8	0.012	0.09	0.0029

(a) Based on the total HHV of gas product.

the neighborhood of 0.48 MT S/day (0.53 tons S/day) or 0.0077 kg S/10 kcal (0.0043 lb S/10^6 Btu) for the CO_2-Acceptor process and 1.13 MT S/day (1.25 tons S/day) or 0.019 kg S/10^6 kcal (0.011 lb S/10^6 Btu) for the Synthane process. Available process design concepts are based on direct discharge of the off gas to atmosphere without treatment.

Supplementary Information

Supplementary information is presented in Appendices. Appendix A contains a description of the current status of coal gasification industry, including a list of gasification plants, and projections on growth of the industry in the United States. Appendix B contains a list of industry experts in the areas of coal gasification and control technology.

REFERENCES

(1) Anonymous, "Evaluation of Coal Gasification Technology, Part II, Low-Btu Fuel Gas", Draft Report prepared by National Research Council and National Academy of Engineering (January 10, 1974).

(2) Chopey, N. P., "Gas-from-Coal: An Update", Chem. Engineering, 81 (5), 70-73 (1974).

(3) Glaser, F., Hershaft, A., and Shaw, R., "Emissions from Processes Producing Clean Fuels", Draft Report prepared by Booz-Allen & Hamilton under EPA Contract No. 68-02-1358 (1974).

(4) Barry, C. B., "Reduce Claus Sulfur Emission", Hydrocarbon Processing, 51 (4), 102-106 (1972).

(5) Naber, J. E., Wesselingh, J. A., and Groenendaal, W., "New Shell Process Treats Claus Off-Gas", Chem. Eng. Prog., 69 (12), 29-34 (1973).

(5a) Anonymous, "Clean Fuel Gas From Coal", Report prepared by Lurgi supplied by American Lurgi Corporation, New York, N.Y. (1974).

(6) Farnsworth, J. F., et al,. "The Production of Gas from Coal Through a Commercially Proven Process", Koppers Company, Inc., Pittsburgh, Pennsylvania (August, 1973 and April, 1974).

(7) Private Communication, Leonard H. F., Koppers Company, Inc., Pittsburgh, Pennsylvania, to B. C. Kim, BCL (May, 1974).

(7a) Magee, E. M., "Evaluation of Pollution Control in Fossil Fuel Conversion Processes, Gasification; Section 1; Koppers Totzek Process", EPA-650/2-74-009a (January, 1974).

(8) Anonymous, "NG/LNG/SNG Handbook", Hydrocarbon Processing, 87-132 (April, 1973).

(9) Private communication, Luley, W. E., Allied Chemical Corporation, Morristown, New Jersey, to B. C. Kim, BCL (May, 1974).

(10) Sweny, J. W., "Synthetic Fuel Gas Purification", Paper presented before the Division of Fuel Chemistry, ACS 165th National Meeting, Dallas, Texas (April 8-12, 1973). (Allied Chemical Corp., Morristown, N. J.)

(11) Private communication, Bokaemper, J., Lotepro Corporation, New York, New York, to B. C. Kim, BCL (May, 1974).

(12) Ranke, G., and Munro, A. B., "Acid Gas Separation by Rectisol in SNG Processes", Lotepro Corporation, New York, New York (1973).

(13) Anonymous, "Purisol for Gas Treating", Report prepared by Lurgi and supplied by American Lurgi Corporation, New York, New York (1974).

(14) Private communication, Gallagher, J. T., American Lurgi Corporation, New York, New York, to B. C. Kim, BCL (April, 1974).

(15) Private communication, Hancock, W. D., Fluor Engineers and Constructors, Los Angeles, California, to B. C. Kim, BCL (May, 1974).

REFERENCES
(Continued)

(16) Buckingham, P. A., "Fluor Solvent Process Plants: How They are Working", Hydrocarbon Processing, 43 (4), 113-116 (1964).

(17) Maddox, R. N., Gas and Liquid Sweetening, Second Edition, John M. Campbell, Norman, Oklahoma (1974).

(18) Klein, J. P., "Developments in Sulfinol and Adip Processes Increase Uses", Oil and Gas International, 10 (9), 109-112 (1970).

(19) Kohl, A. L., and Riesenfeld, F. C., "Today's Processes for Gas Purification", Chem. Eng., 127-178 (June 15, 1959).

(20) Goar, B. G., "Today's Gas Treating Processes - 1", Oil and Gas Journal, 75-79 (July 12, 1971).

(21) Benson, H. E., "Hot Carbonate Plants: How Pressure Affects Costs", Petroleum Refiner, 40 (4), 107-108 (1961).

(22) Eickmeyer, A. G., "Catalytic Removal of CO_2", Chem. Eng. Prog., 58 (4), 89-91 (1962).

(23) Private communication, Eickmeyer, A. G., Eickmeyer and Associates, Prairie Village, Kansas, to B. C. Kim, BCL (May, 1974).

(24) Eickmeyer, A. G., "Thirty-Nine Catacarb Process Plants are Now Sweetening Sour Natural Gas", Oil and Gas Journal, 74-75 (August 9, 1971).

(25) Private communication, McCrae, D., The Benfield Corporation, Pittsburgh, Pennsylvania, to B. C. Kim, BCL (May, 1974).

(26) Private communication, Banchik, I. N., Davy Powergas, Inc., Lakeland, Florida, to B. C. Kim, BCL (May, 1974).

(26a) "Compilation of Air Pollutant Emission Factors", 2nd Ed., EPA Publication No. AP-42, EPA Office of Air & Water Programs (April, 1973).

(27) Beers, W. D., "Characterization of Claus Plant Emissions", Final Report from Process Research, Inc., to U.S. Environmental Protection Agency, Contract No. 68-02-0242, Report No. EPA-R2-73-188 (April, 1973).

(28) Anonymous, "Stretford Removal Processes for H_2S is Licensed", Oil and Gas Journal, 68-69 (October 11, 1971).

(29) Private communication, Vasan, S., Peabody Engineered Systems, Stamford, Connecticut, to B. C. Kim, BCL (June, 1974).

(30) Goar, B. G., "Today's Sulfur Recovery Processes", Hydrocarbon Processing, 47 (9), 248-252 (1968).

(31) Private communication, Daniels, J. D., W. C. Holmes & Company, Ltd., Turnbridge, Huddersfield, England, to B. C. Kim, BCL (June, 1974).

REFERENCES
(Continued)

(32) Genco, J. M., and Tam, S., "Characterization of Sulfur from Refinery Fuel Gas", Draft Report to EPA, Contract No. 68-02-0611, Task 4 (March 29, 1974).

(33) Barthel, Y., et al., "Treat Claus Tail Gas", Hydrocarbon Processing, 50 (5), 89-91 (1971).

(34) Private communication, Dodd, D. E., Shell Development Company, Houston, Texas, to B. C. Kim, BCL (May, 1974).

(35) Krill, H., and Storp, K., "H_2S Absorbed from Tail Gas", Chem. Eng. 84-85 (July 23, 1973).

(36) "Detailed Environmental Analysis Concerning a Proposed Coal Gasification Plant for Transwestern Coal Gasification Company, Pacific Coal Gasification Company and Western Gasification Company", Battelle's Columbus Laboratories (February 1, 1973).

(37) Anonymous, "Lurgi Pressure Gasification Performance Record", Report by Lurgi and supplied by American Lurgi Corporation, New York, New York (1974).

(38) Anonymous, "Gasification Plants Using K-T Process", A Plant List supplied by Koppers Company, Inc., Pittsburgh, Pennsylvania (1974).

(39) Banchik, I. N., "Power Gas from Coal via the Winkler Process", Report supplied by Davy Powergas, Inc., Lakeland, Florida (1974).

(40) Kasturirangan, V. N., "Indian Government Sponsored Comparative Study of Commercial Coal Gasification Processes--Koppers-Totzek, Lurgi, and Winkler", Report supplied by Koppers Company, Inc., Pittsburgh, Pennsylvania (1968-1969).

(41) Internal planning document, Federal Power Commission.

(42) Dupree, W. G., Jr., and West, J. A., "United States Energy Through the Year 2000", U.S. Department of the Interior, December, 1972.

(43) "Commercial Application of Coal Conversion Technology in the United States and Prospects for Coal Exports", Review Draft from Office of Energy Research and Development in cooperation with Bureau of Mines to The Organization for Economic Co-Operation and Development (OECD) Paris, France (1974).

(44) Hall, E. H., Choi, P., and Kropp, E., "Assessment of the Potential of Clean Fuels and Energy Technology", Final Report from Battelle's Columbus Laboratories to U.S. Environmental Protection Agency, February 28, 1974.

APPENDIX A

INDUSTRY STRUCTURE

Coal gasification has been practiced for many years outside of the U. S. for the manufacture of synthesis and fuel gases. Commercial processes in use today include the Lurgi, Koppers-Totzek, and Winkler processes. Coal gasification plants presently operating are listed in Tables A-1, A-2, and A-3. A number of gasification plants have been shut down due to economic considerations. Of a total of 16 Winkler gasification units built between 1926 and 1960, only 3 remain in operation. It is uncertain also whether all of the Lurgi gasification units, especially the pre-1950 units, are still in operation.

Gas Purification Practices at Existing Coal Gasification Plants

Most of the existing coal gasification units, particularly those units which produce synthesis gases, most likely have facilities for gas purification to remove hydrogen sulfide, carbon dioxide, or both. The following paragraphs describe typical gas purification methods used at several Lurgi and Koppers-Totzek plants. They are probably among the exemplary plants as far as the present gas purification practices in the coal gasification industry are concerned.

Lurgi Plants

At the Westfield plant in Scotland owned by the Scottish Gas Board and operated to produce a town gas, the coal gas is desulfurized by the Benfield process followed by oxide towers.[25] The regenerated H_2S is treated by the Claus process for sulfur recovery. Operation of the Claus plant has not been economical due to a low concentration (about 5 percent) of H_2S in the feed.

TABLE A-1. LURGI GASIFICATION UNITS[37]

Owner	Plant Location	Year of Order	Feed	Product Use	Raw Gas Capacity, 10^6 nm^3/day
A. G. Sächsische Werke, Dresden, Germany	Hirschfelde	1936	Lignite	Town gas	0.028
A. G. Sächsische Werke, Dresden, Germany	Böhlen	1940	Lignite	Town gas	0.25
A. G. Sächsische Werke, Germany	Böhlen	1943	Lignite	Town gas	0.28
Sudetenländische Treibstoffwerke AG, Brüx, Czechoslovakia	Most	1944	NA	Town gas	0.21
Sudetenländische Treibstoffwerke AG, Brüx, Czechoslovakia	Most	1949	NA	Town gas	0.25
South African Coal, Oil and Gas Corp., Ltd. Sasolburg, South Africa	Sasolburg	1954	Semibituminous coal	Fischer-Tropsch synthesis	3.7
Gas and Fuel Corp. Melbourne, Australia	Morwell	1956	Lignite	Town gas	0.62
Pakistan Industrial Development Corp. Daud Khel, Pakistan	Daud Khel	1957	Intermediate between lignite and subbituminous coal	Ammonia synthesis	0.12

TABLE A-1. (Continued)

Owner	Plant Location	Year of Order	Feed	Product Use	Raw Gas Capacity, 10^6 nm^3/day
The Scottish Gas Board, Westfield, Scotland	Westfield	1960	Semicaking coal	Town gas	0.71
West Midlands Gas Board, Coleshill, England	Coleshill	1963	Subbituminous coal	Town gas	1.3
Honam Fertilizer Corp., Ltd. Seoul, Korea	Naju	1963	Graphitic anthracite	Ammonia synthesis	0.42
South African Coal, Oil and Gas Corp., Ltd. Sasolburg, South Africa	Sasolburg	1966	Semibituminous coal	Ammonia synthesis	1.7
Steinkohlen-Electrizität AG, Essen, Germany	Luenen	1969	Coal	Fuel gas for combined power cycle	8.5×10^9 kcal/day

TABLE A-2. KOPPERS TOTZEK GASIFICATIONS UNITS[38]

Owner	Plant Location	Year of Order	Feed	Product Use	Capacity ($CO + H_2$), 10^6 nm^3/day
Charbonnage de France, Paris, France	Mazingarbe Works (P.d.C.)	1949	Coal, coke oven gas, tail gas	Methanol and ammonia synthesis	0.08 - 0.16
Typpi Oy, Oulu, Finland	Oulu	1950	Coal, oil, peat	Ammonia synthesis	0.15
Nihon Suiso Kogyo Kaisha, Ltd. Tokyo, Japan	Tokyo	1954	Coal	Ammonia synthesis	0.22
Empresa Nacional "Calvo Sotelo" de Combustibles Liquidos y Lubricantes, S.A., Madrid, Spain	Nitrogen works in Puentes de Garcia Rodriguez, Coruna	1954	Lignite	Ammonia synthesis	0.25
Typpi Oy, Oulu, Finland	Oulu	1955	Coal, oil, peat	Ammonia synthesis	0.15
S.A. Union Chimique Belge, Brussels, Belgium	Zandvoorde Works	1955	Bunker C, plant convertible for coal	Ammonia synthesis	0.19
Amoniaco Portugues S.A.R.L., Lisbon, Portugal	Estarreja Plant	1956	Heavy gasoline, plant extendable to lignite and anthracite	Ammonia synthesis	0.19

TABLE A-2. (Continued)

Owner	Plant Location	Year of Order	Feed	Product Use	Capacity ($CO + H_2$), 10^6 nm^3/day
The Government of Greece, The Ministry of Coordination, Athens, Greece	Nitrogenous Fertilizer Plant, Ptolemais	1959	Lignite, Bunker C	Ammonia synthesis	0.66
Empresa Nacional "Calvo Sotelo" de Combustibles Liquidos y Lubricantes, S.A., Madrid, Spain	Nitrogen works in Puentes de Garcia Rodriguez, Coruna	1961	Lignite or naphtha	Ammonia synthesis	0.18
Chemical Fertilizer Co., Ltd. Thailand	Synthetic Fertilizer Plant at Mae Moh, Lampang	1963	Lignite	Ammonia synthesis	0.23
Azot Sanayii T.A.S., Ankara, Turkey	Kütahya Works	1966	Lignite	Ammonia synthesis	0.82
Industrial Development Corp. Zambia	Kafue near Lusaka	1967	Coal	Ammonia synthesis	0.17
The Fertilizer Corporation of India, Ltd. New Delhi, India	Ramagundam Plant	1969	Coal	Ammonia synthesis	2.1
The Fertilizer Corporation of India, Ltd. New Delhi, India	Talcher Plant	1970	Coal	Ammonia synthesis	2.1

TABLE A-2. (Continued)

Owner	Plant Location	Year of Order	Feed	Product Use	Capacity ($CO + H_2$), 10^6 nm^3/day
Nitrogenous Fertilizers Industry S.A., Athens, Greece	Nitrogenous Fertilizers Plant, Ptolemais	1970	Lignite	Ammonia synthesis	0.25
The Fertilizer Corporation of India, Ltd. New Delhi, India	Korba Plant	1972	Coal	Ammonia synthesis	2.1
AE & CI Ltd. Johannesburg, South Africa	Modderfontein Plant	1972	Coal	Ammonia synthesis	2.3

TABLE A-3. WINKLER GASIFICATION UNITS[39]

Owner/Plant Location	Year	Product	Raw Gas Capacity, 10^6 nm^3/day
Fabrika Azotnih Jendinjenja, Gorazde, Yugoslavia	1953	Synthesis gas	0.13
Azot Sanyyii TAS, Kutahya, Turkey	1959	Synthesis gas	0.61
Neyveli Lignite Corp. Madras, India	1959	Synthesis gas	3.2

At the Coleshill plant in England, owned by the West Midlands Gas Board and operated to manufacture a town gas, the Alkazid process and oxide towers are used for H_2S removal.[40] The recovered H_2S is sent to a Claus plant for sulfur recovery.

At the Sasol plant in South Africa, owned by South African Coal, Oil, and Gas Corporation, Ltd., and operated to manufacture a Fischer-Tropsch synthesis gas, the Rectisol process is used for the removal of H_2S and CO_2.[14] Disposition of the H_2S recovered from the Rectisol process is not known.

Koppers-Totzek Plants

At the Kutahya plant in Turkey, owned and operated by Azot Sanayii T.A.S. for the manufacture of an ammonia synthesis gas, the coal gas produced is first treated by the Sulfinol process for H_2S removal and further treated by the Retisol process for CO_2 removal.[40] The H_2S recovered from the Sulfinol process is flared and vented to atmosphere. The CO_2 recovered from the Rectisol process is vented directly to atmosphere.

At the Coruna plant in Spain, owned and operated by Empresa Nacional "Calvo Sotelo" de Combustibles Liquides y Lubricantes, S.A., for the manufacture of an ammonia synthesis gas, the coal gas is treated for H_2S and CO_2 removal by a hot potassium carbonate process followed by oxide boxes.[40] The H_2S regenerated is sent to a Claus plant for sulfur recovery.

At the Modderfontein plant in South Africa, owned and operated by AE & CI, Ltd. for the manufacture of an ammonia synthesis gas, the coal gas produced is treated by the Recitisol process for H_2S and CO_2 removal.[7] The H_2S recovered from the Recitisol process will be converted to sulfur by the Claus process.

Contacts for Existing Coal Gasification Plants

The coal gasification plants which are operating at present outside of the U. S. can be contacted through the U. S. licensees listed below.

Lurgi Plants: Mr. John T. Gallagher
General Manager, Coal Gasification
American Lurgi Corporation
5 East 42nd Streed
New York, New York 10017
(212) 986-9595

Koppers-Totzek Plants: Mr. Frank Cannon
Sales Manager
Koppers Company, Inc.
Koppers Building
Pittsburgh, Pennsylvania 15219
(412) 391-3300

Winkler Plants: Mr. I. N. Banchik
Manager, Commercial Development
Davy Powergas, Inc.
Post Office Box 2436
Lakeland, Florida 33803
(813) 646-7515

Projections on the Use of Synthetic Fuels from Coal Gasification in the United States

The use of low-energy gas from coal (or producer gas, as it is sometimes called) was once widespread in industry; in fact, it was the first gaseous fuel in the iron and steel industry for firing open-hearth furnaces between 1860 and 1920, when by-product coke oven gas displaced it. In 1920, there were reportedly over 11,000 gas producers supplying gaseous fuel for a wide variety of industries from brick plants to bakeries. With the advent of inexpensive natural gas and oil, however, the incentive for gasifying coal decreased until today there are but a few bituminous coal gas producers in this country, and these have largely been placed in standby positions. At the present time, only one small producer in the United States is currently known to be yielding low-Btu gas for use at a plant in Pennsylvania. There has never been any substantial use of high-Btu gas derived from coal for pipeline purposes although technology is probably available.

The future for plants producing high-Btu-gas has been estimated by several organizations in the recent past, and the results are shown in Table A-4. The future for low-Btu gas plants seems somewhat less certain. The only estimate located to date is one made by BCL for the Environmental Protection Agency and only for application for conversion of boilers. The figures are shown in Table A-5.

If this low-Btu gas is shown to be an adequate substitute for industrial pruposes, and especially if town gas for residential purposes again becomes acceptable in the Untied States, these estimates for low-energy gas may prove to be too low.

TABLE A-4. SURVEY OF ESTIMATES OF FUTURE SUPPLY OF PIPELINE QUALITY (HIGH BTU) GAS PRODUCED FROM COAL IN THE UNITED STATES (Trillions of kcal)

	Year				
Source	1980	1985	1990	1995	2000
FPC[41]	76	280	780	200	--
USDI[42]	180	500	--	--	1400
USBM[43]	25	330	760	1000	1600

TABLE A-5. ESTIMATE OF FUTURE SUPPLY OF LOW-ENERGY (LOW-BTU GAS PRODUCED FROM COAL IN THE UNITED STATES (Trillions of kcal)

	Year				
Source	1980	1985	1990	1995	2000
EPA[44]	0	120	--	--	980

APPENDIX B

INDUSTRY EXPERTS AND POTENTIAL ATTENDAN FOR INDUSTRYWIDE MEETING

Individuals who have expertise and interest in the coal gasification industry were identified during the course of this program through direct contacts and referrals. These individuals represent the developers and potential users of coal gasification processes and the suppliers of control processes. A list of these individuals, including names, positions, addresses, and telephone numbers are given in Table B-1. Individuals contacted during this program were informed about the purpose of this program. All expressed interest in the outcome of this program and willingness to attend the industrywide meeting being planned by the EPA to provide written and oral comments on this report, and to cooperate with the EPA in writing the New Source Performance Standards for the coal gasification industry.

TABLE B-1. **LIST OF INDUSTRY EXPERTS**

Coal Gasification Processes

Mr. George Musat*
Fossil Fuels Environmental Control
Electric Power Research Institute
3412 Hillview Avenue
Post Office Box 10412
Palo Alto, California 94304
(415) 493-4800

Mr. John B. Anderson*
Product Manager
Research and Development Sales
Combustion Engineering, Inc.
Windsor, Connecticut 06095
(203) 688-1911

Mr. John F. Farnsworth*
Supervisor
Coal and Gas Technology
Engineering and Construction Division
Koppers Company, Inc.
Pittsburgh, Pennsylvania 15219
(412) 391-3300

Mr. R. S. Rutherford*
Chairman of the Board
Riley Stoker Corporation
Nine Neponset Street
Worchester, Massachusetts 01606
(617) 852-7100

Mr. A. M. Freudberg
Power Generation Division
The Babcock & Wilcox Company
Barberton, Ohio 44203
(216) 753-4511

Mr. I. Norman Banchik*
Manager, Commercial Development
Davy Powergas, Inc.
Post Office Box 2436
Lakeland, Florida 33803
(813) 646-7515

Mr. Howard M. Siegel
Manager
Synthetic Fuels Research Dept.
Esso Research and Engineering Corp.
Post Office Box 101
Florham Park, New Jersey 07932
(201) 474-6012

Mr. John P. Gallagher*
General Manager
Coal Gasification
American Lurgi Corporation
Five East 42nd Street
New York, New York 10017
(212) 986-9595

Mr. Joseph Agosta*
Manager
Coal Gasification Program
Commonwealth Edison Company
Post Office Box 767
Chicago, Illinois 60690
(312) 294-2914

Mr. Len Fish
Senior Vice President of Planning
American Gas Association
1515 Wilson Boulevard
Arlington, Virginia 22209
(202) 524-2000

Mr. Albert Forney*
Research Coordinator
Pittsburgh Energy Research Center
U.S. Bureau of Mines
4800 Forbes Avenue
Pittsburgh, Pennsylvania 15213
(412) 898-2400

Mr. R. A. McAllister
Process Technology Manager
Foster Wheeler Corporation
110 S. Orange Avenue
Livingston, New Jersey 07039
(201) 533-3005

TABLE B-1. (Continued)

Mr. J. F. Magnuson
Sales Engineer
Mining Engineering Group
McDowell Wellman Company
113 Saint Clair Avenue, NE
Cleveland, Ohio 44114
(216) 621-9934

Mr. Thoren P. Cook
Project Director for Wesco Coal
Gasification Plant
Fluor Engineers and Constructors, Inc.
2500 South Atlantic Boulevard
Los Angeles, California 90040
(213) 262-6111

Mr. E. M. Magee
Government Research Laboratory
Esso Research and Engineering Company
Post Office Box 8
Linden, New Jersey 07036
(201) 474-1000

Dr. John D. Holmgren*
Manager
Energy Systems Operation
Coal Gasification Research
Westinghouse Electric Corporation
Post Office Box 158
Madison, Pennsylvania 15663
(412) 722-5552

Dr. A. Eugene Cover
The M. W. Kellogg Company
1300 Three Greenway Plaza East
Houston, Texas 77046
(713) 626-5600

Mr. Donald Fleming*
Manager
Pollution Control Processes
Institute of Gas Technology
3424 South State Street
Chicago, Illinois 60616
(312) 225-9600

Mr. Sidney Katell*
Chief, Process Evaluation
U.S. Bureau of Mines
Post Office Box 880
Morgantown, West Virginia 26505
(304) 599-7431

Dr. J. D. Sudbury
Assistant Director of Research
Consolidation Coal Company
Library, Pennsylvania 15129
(412) 288-8700

Mr. Roger Detman*
Project Manager
C. F. Braun & Company
Alhambra, California
(213) 570-1000

Mr. Ray Vener
Acting Assistant Director
Office of Coal Research
2100 M Street, N.W.
Washington, D.C. 20240
(202) 343-6681

Mr. J. T. Clancey*
Project Manager
Consolidation Coal Company
Library, Pennsylvania 15129
(412) 288-8700

Mr. Neil Cochran*
Acting Assistant Director
Office of Coal Research
2100 M Street, N.W.
Washington, D.C. 20240
(202) 343-6681

TABLE B-1. (Continued)

Mr. S. J. Thomson
Manager, Environmental Engineering
Fluor Engineers and Constructors, Inc.
2500 S. Atlantic Boulevard
Los Angeles, California 90040
(213) 262-6111

Mr. Andrew Anstadt*
Manager of Projects
Fluor Engineers and Constructors, Inc.
2500 S. Atlantic Boulevard
Los Angeles, California 90040
(213) 262-6111

Mr. J. T. Wooten
Project Director
Texas Eastern Transmission Corporation
Post Office Box 2521
Houston, Texas 77001
(713) 224-7961

Mr. R. L. Rudzik
General Manager
Pacific Lighting Service Company
720 West 8th Street
Los Angeles, California 90054
(213) 689-3586

Mr. D. Michael Mitzak
Manager, Chemical Projects Section
Koppers Company, Inc.
Koppers Building
Pittsburgh, Pennsylvania 15219
(412) 391-3300

Mr. Cecil R. Gibson
Chief Solids Gasification Engineer
El Paso Natural Gas Company
Post Office Box 1492
El Paso, Texas 79928
(915) 543-2600

Mr. Robert M. Christianson
Manager, Environmental Sciences Division
Stearns-Roger, Inc.
Post Office Box 5888
Denver, Colorado 80217

Mr. Frank Schorra
Vice President, Process Engineering
Institute of Gas Technology
3424 South State Street
Chicago, Illinois 60616
(312) 225-9600

Dr. Bernard S. Lee
Director, Hygas Facility
Institute of Gas Technology
3424 South State Street
Chicago, Illinois 60616
(312) 225-9600

Mr. John W. Loeding
Assistant Director, Low-Btu
Gas Processes
Institute of Gas Technology
3424 South State Street
Chicago, Illinois 60616
(312) 225-9600

Mr. Fred M. Glaser
Senior Engineer
Booz-Allen Applied Research
4733 Bethesda Avenue
Bethesda, Maryland 20014
(301) 656-2200

Dr. Robert Shaw
Research Director
Booz-Allen Applied Research
4733 Bethesda Avenue
Bethesda, Maryland 20014
(301) 656-2200

TABLE B-1. (Continued)

Acid Gas Removal Processes

Mr. W. E. Luley*
Director, Gas Purification Department
Allied Chemical Corporation
Post Office Box 1013-R
Morristown, New Jersey 07960
(201) 455-4353

Mr. John W. Sweney*
Manager, Process Engineering
Allied Chemical Corporation
Post Office Box 1013-R
Morristown, New Jersey 07960
(201) 455-4557

Mr. E. J. Frisch*
Group Leader
Shell Development Company
2525 Murworth Drive
Houston, Texas 77054
(713) 795-3928

Mr. R. W. Van Scoy
Senior Engineer
Shell Development Company
2525 Murworth Drive
Houston, Texas 77054
(713) 795-3962

Mr. Juergen Bokaemper*
Project Engineer
Lotepro Corporation
801 Second Avenue
New York, New York 10017
(212) 679-1337

Mr. Howard F. Leonard*
Senior Project Engineer
Koppers Company, Inc.
Koppers Building
Pittsburgh, Pennsylvania 15219
(412) 391-3300

Mr. H. E. Benson
President
The Benfield Corporation
615 Washington Road
Pittsburgh, Pennsylvania 15228
(412) 344-8550

Mr. J. H. Field
Vice President, Engineering
The Benfield Corporation
615 Washington Road
Pittsburgh, Pennsylvania 15228
(412) 344-8550

Mr. Don McCrae*
Manager, Process Development
The Benfield Corporation
615 Washington Road
Pittsburgh, Pennsylvania 15228
(412) 344-8550

Mr. I. Norman Banchik*
Manager, Commercial Development
Davy Powergas, Inc.
Post Office Box 2436
Lakeland, Florida 33803
(813) 646-7515

Mr. R. M. Tennyson*
Manager of Processes
Fluor Engineers and Constructors, Inc.
2500 S. Atlantic Boulevard
Los Angeles, California 90040
(213) 262-6111

Mr. P. A. Buckingham
Supervising Engineer
Fluor Engineers and Constructors, Inc.
2500 S. Atlantic Boulevard
Los Angeles, California 90040
(213) 262-6111

TABLE B-1. (Continued)

Mr. A. G. Eickmeyer*
Chemical Engineering Consultant
Eickmeyer & Associates
Post Office Box 8224
Prairie Village, Kansas 66208
(913) 362-1090

Sulfur Recovery Processes

Mr. I. Norman Banchik*
Manager, Commercial Development
Davy Powergas, Inc.
Post Office Box 2436
Lakeland, Florida 33802
(813) 646-7515

Mr. Srini Vasan*
Director, Business Development
Peabody Engineered Systems
39 Maple Tree Avenue
Stamford, Connecticut 06906
(203) 327-7000

Mr. O. C. Roddey
Vice President, Precontract and Process
The Ralph M. Parsons Company
Post Office Box 54802
Los Angeles, California 90054

Mr. D. F. Cole
Contract Engineer
J. F. Pritchard & Company
4625 Roanoke Parkway
Kansas City, Missouri 64112
(816) 531-9500

Tail Gas Treatment Processes

Mr. E. E. Dodd*
Group Leader
Shell Development Company
2525 Murworth Drive
Houston, Texas 77054
(713) 795-3920

Mr. R. A. Golding
Supervisor
Shell Development Company
2525 Murworth Drive
Houston, Texas 77054
(913) 795-3904

Mr. C. B. Earl*
Sales Manager
Davy Powergas, Inc.
Post Office Box 2436
Lakeland, Florida 33803
(813) 646-7100

Mr. A. S. Kasperik
Consultant to Technology Sales
Union Oil Company of California
Research Department
Post Office Box 76
Brea, California 92621
(714) 528-7201

Mr. O. C. Roddey
Vice President, Precontract and Process
The Ralph M. Parsons Company
Post Office Box 54802
617 W. Seventh Street
Los Angeles, California 90054

Mr. Andrew J. Robbell
Manager, Licensing and Patents
J. F. Pritchard & Company
4625 Roanoke Parkway
Kansas City, Missouri 64112
(816) 531-9500

Mr. R. Dutria
Sales Engineer
Institut Francais de Petrole
90 Park Avenue
New York, New York 10016
(212) 986-3391

TECHNICAL REPORT DATA
(Please read Instructions on the reverse before completing)

1. REPORT NO. EPA-450/3-75-029	2.	3. RECIPIENT'S ACCESSION NO.
4. TITLE AND SUBTITLE Development of Information for Standards of Performance for the Fossil Fuel Conversion Industry		5. REPORT DATE October 1974
		6. PERFORMING ORGANIZATION CODE
7. AUTHOR(S) B. Kim, J. Genco, J. Oxley, P. Choi		8. PERFORMING ORGANIZATION REPORT NO.
9. PERFORMING ORGANIZATION NAME AND ADDRESS Battelle Columbus Laboratories 505 King Ave. Columbus, Ohio 43201		10. PROGRAM ELEMENT NO.
		11. CONTRACT/GRANT NO. 68-02-0611, Task 7
12. SPONSORING AGENCY NAME AND ADDRESS Environmental Protection Agency Office Of Air Quality Planning & Standards Research Triangle Park, North Caroling 27711		13. TYPE OF REPORT AND PERIOD COVERED Final
		14. SPONSORING AGENCY CODE
15. SUPPLEMENTARY NOTES		

16. ABSTRACT

This report recapitulates information developed in EPA Report No. 9075-015 pertaining to four SNG coal gasification processes (Lurgi, Synthane, Hygas and CO_2-Acceptor) and one Low-BTU fuel gasification process (Lurgi). Commercial literature on another Low-BTU process (Koppers-Totzek) is also recapitulated. Control of sulfurous emissions is discussed. (Bibliography included.)

17. KEY WORDS AND DOCUMENT ANALYSIS

a. DESCRIPTORS	b. IDENTIFIERS/OPEN ENDED TERMS	c. COSATI Field/Group
Fuels	Fuel Conversion	21/D
Coal Gasification	Sulfurous Emissions	13/H
Air Pollution		13/B
Desulfurization		7/A

18. DISTRIBUTION STATEMENT Release Unlimited	19. SECURITY CLASS *(This Report)* Unclassified	21. NO. OF PAGES 158
	20. SECURITY CLASS *(This page)* Unclassified	22. PRICE

EPA Form 2220-1 (9-73)