EPA-450/3-75-076
October 1975

ATMOSPHERIC EMISSIONS SURVEY OF THE SOUR GAS PROCESSING INDUSTRY

U.S. ENVIRONMENTAL PROTECTION AGENCY
Office of Air and Waste Management
Office of Air Quality Planning and Standards
Research Triangle Park, North Carolina 27711

EPA-450/3-75-076

ATMOSPHERIC EMISSIONS SURVEY OF THE SOUR GAS PROCESSING INDUSTRY

by

Ecology Audits, Inc.
11061 Shady Trail
Dallas, Texas 75229

Contract No. 68-02-1865

EPA Project Officer: Harry Butcher

Prepared for

ENVIRONMENTAL PROTECTION AGENCY
Office of Air and Waste Management
Office of Air Quality Planning and Standsrds
Research Triangle Park, North Carolina 27711

October 1975

This report is issued by the Environmental Protection Agency to report technical data of interest to a limited number of readers. Copies are available free of charge to Federal employees, current contractors and grantees, and nonprofit organizations - as supplies permit - from the Air Pollution Technical Information Center, Environmental Protection Agency, Research Triangle Park, North Carolina 27711; or, for a fee, from the National Technical Information Service, 5285 Port Royal Road, Springfield, Virginia 22161.

This report was furnished to the Environmental Protection Agency by Ecology Audits, Inc., Dallas, Texas 75229, in fulfillment of Contract No. 68-02-1865. The contents of this report are reproduced herein as received from Ecology Audits, Inc. The opinions, findings, and conclusions expressed are those of the author and not necessarily those of the Environmental Protection Agency. Mention of company or product names is not to be considered as an endorsement by the Environmental Protection Agency.

Publication No. EPA-450/3-75-076

TABLE OF CONTENTS

		PAGE NO.
	Preface	iv
	Acknowledgments	vi
	List of Figures	vii
	List of Tables	viii
	Summary	ix
I.	Introduction	1
II.	Section for AP-42	27
	General	27
	Process Description	29
	Emissions	30
	References	34
III.	Research Leading to the Development of Emission Factors for Natural Gas Sweetening	35
	Introduction	35
	Emission Points	35
	Sulfur Compound Emissions	36
	Other Emissions	36
	Development of Emission Factor	37
IV.	Source Classification Codes	45
V.	List of Gas Processing Plants in the Contiguous United States that have Sour Gas Resources	48
	Glossary	115
	Bibliography	118
	Appendix A - Data Summary of Sour Gas Production Used in Table 3	A1
	EPA Technical Report Data	

PREFACE

The initial objective of Contract 68-02-1865 was to obtain the most reliable emissions and source test data for each natural gas processing facility in the United States which produces more than 25 long tons of sulfur per year. By definition, the survey was to be restricted to those gas processing plants with sour gas feedstocks, to the exclusion of all sweet gas processing plants. These data were then to be used to supplement and refine the information in the National Emissions Data System (NEDS), the Source Test Data System (SOTDAT), the EPA publication AP-42, "Compilation of Air Pollutant Emission Factors", and for the proposal of new Source Classification Codes for the gas processing industry.

However, the contract objectives were reinterpreted at a meeting of all contract principals held at NADB in Durham on March 26, 1975. At that meeting it was decided that the development of Source Classification Codes for gas sweetening plants (for removal of "sour" hydrogen sulfide) should have first priority, the development of emission factors for gas sweetening should have second priority, and encoding NEDS and SOTDAT forms should have last priority. The following contract chronology is presented in order to describe the progression of work performed on this contract:

January 29, 1975	Contract signed. Due date 1 August 1975.
February 3, 1975	Work commenced.
March 26, 1975	Meeting of contract principals, all materials to be provided by EPA delivered at conclusion of meeting.

April 12, 1975	Computer printouts of current plants in NEDS received from EPA.
May 6, 1975	Sample NEDS forms submitted to EPA for review.
May 21, 22, 23, 1975	Data gathering trip to Texas Air Control Board, Austin, Texas.
June 2, 1975	James Southerland visited Ecology Audits and reviewed progress.
June 9, 1975	Sample SOTDAT forms submitted to EPA for review.
June 9, 1975	Permission requested to visit New Mexico Environmental Improvement Agency - Air Quality Division.
June 11, 1975	Extension of time period for contract requested by Ecology Audits, Inc.
June 24, 1975	Preliminary Draft of SCC codes submitted to EPA for review.
July 2, 1975	Preliminary Draft of Introduction to section for AP-42 submitted to EPA for review.
July 22, 1975	Permission requested to visit state agencies in Alabama, Arkansas, Louisiana and Oklahoma.
July 30, 1975	Permission granted to visit New Mexico state agency.
August 5, 1975	Modification of contract time period extending contract due date to 1 September 1975 received.
August 8, 1975	Revised SCC codes submitted to EPA.
August 8, 1975	Preliminary Draft of Emissions Factor for publication AP-42 submitted to EPA.
August 18, 1975	All SOTDAT forms submitted to EPA.
August 26, 1975	Project Officer Butcher visited Ecology Audits and surveyed the rough draft. A conducted tour of a gas processing plant and sulfur recovery unit was completed. Draft of final report submitted to Project Officer for review.

Chapter II of this report is intended for inclusion in EPA publication AP-42, "Compilation of Air Pollutant Emission Factor", and as such is presented in the format of that publication rather than in the standard format of research reports to EPA.

ACKNOWLEDGMENTS

The authors wish to express their appreciation to several persons who made significant contributions to the success of the survey project: Mr. Harry Butcher, EPA Project Officer, for his availability and willingness to work out solutions to problems that were encountered; Mr. James Southerland, EPA National Air Data Branch, for his review comments and answers to many questions; Mr. Jim Anz, Consulting Engineer with Core Laboratories, Inc. for his discussion and guidance in our pursuit of the data base and survey approach; and Dr. Joe Pennington, Chief of Emissions Inventory Section, Texas Air Control Board, for his generous help in our review of Texas' Emissions Inventory. Additionally, we wish to thank all the people who helped us in small ways, but whom are too numerous to mention individually.

FIGURE TITLES

		PAGE NO.
1.	Flow Diagram of the Natural Gas Industry	2
	A. Flow Diagram for a 3-Stage Wellhead Separation Unit	3
	B. Flow Diagram of an Amine Gas Sweetening Plant	5
	C. Flow Diagram of a 2-Stage Claus Sulfur Recovery Plant	6
	D. Flow Diagram of a Typical Diethyleneglycol Dehydration Plant	8
	E. Schematic of a Gas Processing Plant	9
2.	Flow Diagram of Basic Amine Process for Gas Sweetening	11
3.	Flow Diagram of Conventional Hot Carbonate Process	16
4.	Flow Diagram of a Typical Water Wash Absorption Unit	21
9.2-1	Flow Diagram of the Natural Gas Industry	28
9.2-2	Flow Diagram of the Amine Process for Gas Sweetening	29
5.	Map of AQCRs in 16 States with Sour Gas Resources	43

TABLE TITLES

		PAGE NO.
9.2-1.	Emission Factors for Gas Sweetening Plants	31
9.2-2.	Average Hydrogen Sulfide Concentrations in Natural Gas by Air Quality Control Regions	32
1.	Hydrocarbon Analysis of a Stack Gas Sample	37
2.	Emissions Factors for Gas Sweetening Plants	38
3.	Average Hydrogen Sulfide Concentrations in Natural Gas by Air Quality Control Regions	39
4.	List of Gas Processing Plants in 16 States that have Sour Gas Resources	51

SUMMARY

The natural gas industry is comprised of several discrete activities including the drilling and completion of wells, separating and dehydrating the raw natural gas into its constituent parts, removing hydrogen sulfide if present (called "sweetening" the gas), recovering sulfur from the gas, and storing and distributing the various forms of natural gas. Natural gas from the well may contain many compounds including carbon dioxide, carbon disulfide, carbonyl sulfide, mercaptans, water vapor, nitrogen and crude oil.

There are three major sources of emissions to the atmosphere from the natural gas industry. They are compressor and pump engines, boilers for process heating and solution regeneration, and gas sweetening. Engine exhausts and external combustion boilers are each the subject of separate study in the EPA publication AP-42, "Compilation of Air Pollutant Emission Factors". The emissions from gas sweetening operations are the combustion products of the waste acid gases following their removal from the raw natural gas. Combustion oxidizes the waste acid gases to sulfur dioxide with negligible emissions of particulates, nitrogen oxides, hydrocarbons and carbon monoxide.

There are four major categories of sweetening processes: 1) amine solutions 2) carbonate processes 3) physical absorption and 4) solid bed sweetening, all of which accomplish removal of hydrogen sulfide. Each of 27 different processes are briefly described and references made to their special applications.

A major objective of the project was to develop an emissions factor for natural gas sweetening plants that could be included in the EPA publication AP-42 "Compilation of Air Pollutant Emission Factors". Towards this objective, content analysis of the technical literature was performed, consultations with natural gas engineers and plant personnel, as well as with air pollution specialists, were pursued in order to develop a data base for historic emissions and gas plant specifications. The survey was restricted to only those states producing sour gas.

The major waste product from the gas sweetening processes is an acid containing H_2S and CO_2. This acid gas can be used by chemical plants or sulfur recovery plants for commercial purposes, or it may be disposed of by burning. The combustion of this acid gas results in emissions of sulfur dioxide. Assuming the combustion of the acid gas is essentially 100 percent complete and assuming that the sweetening process removes essentially 100 percent of the H_2S present in the feedstock, then the SO_2 emissions from the acid gas combustion are directly proportional to the mol percentage of H_2S in the sweetening plant intake stream. Therefore, when the H_2S mol percentage of intake gas is known, the SO_2 emissions of the sweetening plant can be calculated by multiplying the whole number representing the H_2S mol percent by the factor 1685 to get the pounds of SO_2 emitted per million cubic feet of intake gas sweetened. The research and development leading to the factor 1685 is presented.

If the H_2S content of the intake gas stream is unknown, the above direct calculations cannot be made. In order to allow some degree of calculation of emissions, a geographical survey of sour gas fields was compiled in order to define an average mol percentage of H_2S produced by various fields in the United States. These data were then presented by

Air Quality Control Region. Reference to the table of values for H_2S by AQCR will allow one to calculate estimated emissions for a plant within the geographical region.

Another objective of the research project was to propose a new Source Classification Code for gas sweetening, as none presently exist. The only emissions from the gas sweetening process are the acid gas wastes containing CO_2 and H_2S. This acid gas may be flared or incinerated, thereby generating sulfur dioxide emissions, and negligible emissions of particulates, nitrogen oxides, hydrocarbons and carbon monoxide. The acid gas is frequently used by associated industries as feedstock, and when it is so utilized, there are no emissions from the gas sweetening process. Five Source Classification Codes were proposed to reflect the described situations; e.g., gas sweetening with a flare, with an incinerator, or with an associated industry utilizing the waste acid gases.

The last objective of the project was to review the contents of the National Emissions Data System (NEDS) and the Source Test Data System (SOTDAT). This was done by survey of the NEDS computer printouts from EPA, from plant and emissions surveys by industry trade associations, and by review of the research literature. The final result presented was an annotated list of gas plants by state with comments on their coding status and emissions. The authors believe the list to be one of the most comprehensive for all gas plants in the 16 states surveyed, which represents almost all sour gas production in the United States. Development of processing facilities within the last two years may not have been recorded, but this list should be current up to 1973.

I. INTRODUCTION

The natural gas industry comprises several discrete activities including the drilling and completion of wells, separating and dehydrating the raw gas, removing hydrogen sulfide (called sweetening the gas), recovering sulfur from gas that is rich in hydrogen sulfide, processing the gas into its constituent parts, and transmission of the produced gas in pipelines. Figure 1 is a diagram showing the activities involved in obtaining natural gas for consumers. The involved legend for Figure 1 will serve to explain the various processes and describe how the industry interacts with the environment.

The three primary activities of preparing natural gas for consumption are separating-dehydrating, sweetening, and processing. Separators and dehydrators themselves have no emissions to the atmosphere as their operation is only concerned with the physical composition of the gas stream from the well and all operations occur in a closed system. In case of emergencies, venting or flaring of the gas may occur.

Similarly, gas processing itself has no emissions to the atmosphere because the processes involved occur in closed systems. The processes involve changing the physical properties of natural gas and any emission to the atmosphere is essentially a loss of product. Again, emergencies can cause venting of gas to the atmosphere, but stringent safeguards are taken against this occurring.

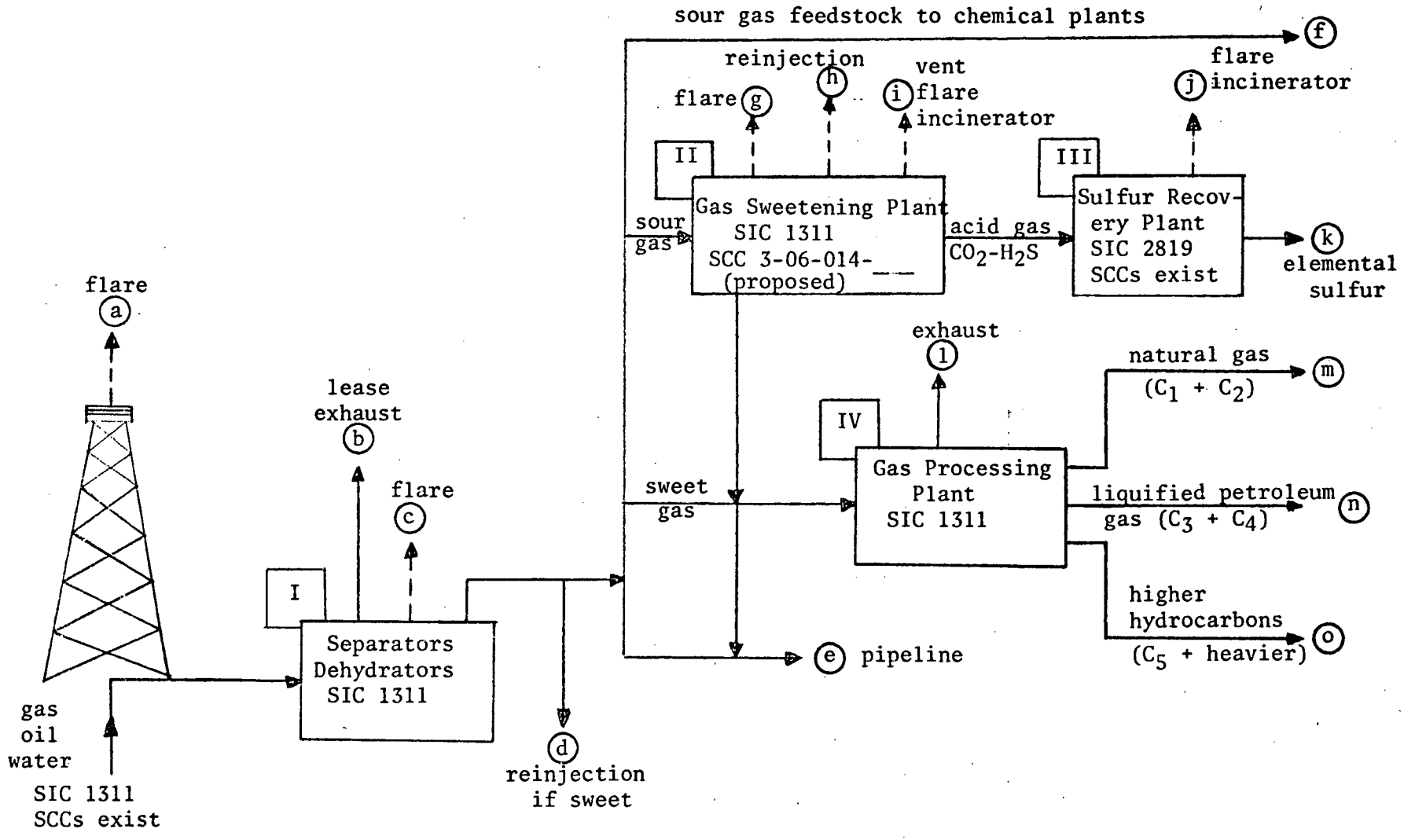

Figure 1

Flow diagram of the natural gas industry

LEGENDS FOR FIGURE 1

a Flare during well testing and completion, SIC 1311
SCC 3-06-009-01

The flared materials may include water vapor, H_2S and/or CO_2, mercaptans, carbon disulfide and/or carbonyl sulfide. Well-site flares are usually low temperature flames yielding incomplete combustion products including SO_2 and hydrocarbons.

I Separators - Dehydrators SIC 1311

Natural gas from gas wells passes through separators at the well head to remove hydrocarbon condensates and water. Motive power for the process is either natural pressure in the well or by pump. Figure 1A is a flow diagram of a three stage wellhead separation unit.

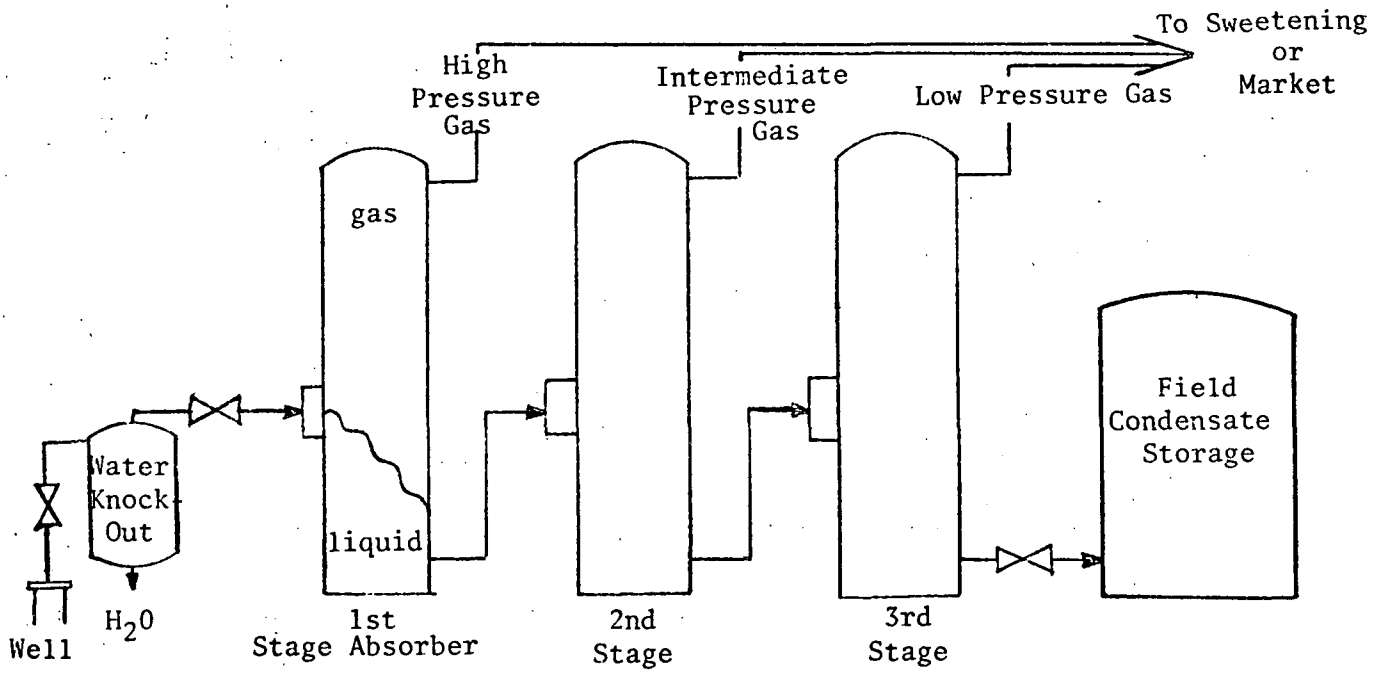

Figure 1A

Flow diagram for a three-stage wellhead separation unit

Legends (cont.)

b Lease exhaust

Exhaust emissions for lease operations are included in various internal combustion SCC codes: reciprocating natural gas engines, SCC 2-02-002-02; reciprocating gasoline engines, SCC 2-02-003-01; or reciprocating diesel engines, SCC 2-02-004-01.

c Flare, SCC 3-06-009-01

A flare operating on a separator/dehydrator at the wellhead would yield emissions of SO_2 and hydrocarbons from incomplete combustion of water vapor, H_2S and/or CO_2. Gas is normally dehydrated either by a di- or triethylene glycol absorption process or by passage over solid desiccants such as alumina, silica gel or bauxite. Other dehydrating processes such as direct cooling, compression followed by cooling, and chemical reactions are little used today.

d Reinjection to reservoir, if sweet

In certain cases sweet natural gas is immediately reinjected into the reservoir to maintain reservoir pressures rather than marketing the gas. This is referred to as a gas cycling operation.

e Pipeline SIC 4922 Natural Gas Transmission, 4923 Natural Gas Transmission and Distribution, 4924 Natural Gas Distribution

Sweetened gas must meet rigid specifications before it will be purchased by pipeline transporters. The generally required specification for pipeline gas is an H_2S content of "no more than one-quarter grain H_2S per 100 standard cubic feet of gas". This is approximately 4×10^{-6} mole fraction of H_2S, or 4 parts per million by volume, or 6 mg of H_2S per normal cubic meter of gas.

f Feedstock to Chemical Plants

Some chemical manufacturing processes use sour gas as a starting material. The sour gas would be piped to nearby chemical plants.

II Gas Sweetening Plant - amine process SIC 1311

Proposed SCCs	3-06-014-01	Amine process w/smokeless flare
	3-06-014-02	Amine process w/incinerator
	3-06-014-03	Amine process w/Claus plant
	3-06-014-04	Amine process w/H_2SO_4 plant
	3-06-014-05	Amine process w/well reinjection
	3-06-014-99	Other/Not Classified

Figure 1B is a flow diagram of the amine sweetening process. A detailed description follows in the text.

Legends (cont.)

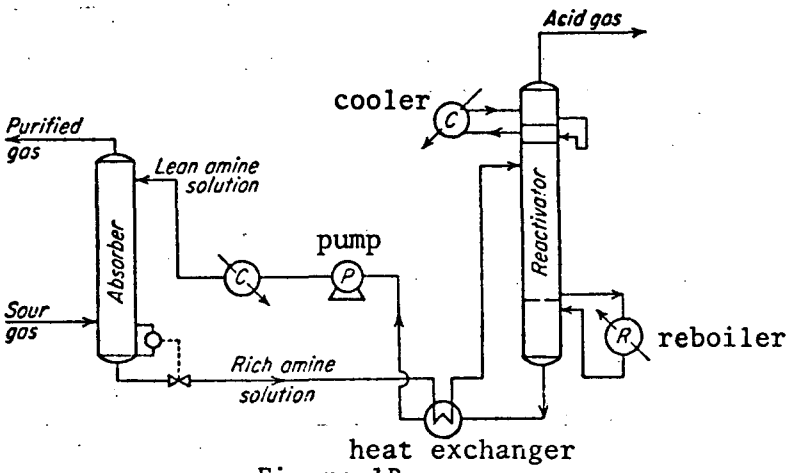

Figure 1B

Flow diagram
of an amine gas sweetening plant

g Emergency flare

Flare would oxidize sour gas giving SO_2 emissions. No SCC codes because of unpredictable nature.

h Reinjection to reservoir

In some cases after sour gas has been sweetened, it is reinjected to maintain reservoir pressures rather than being marketed. This optional use of sweet gas is dependent on plant design and field operation.

i Flare, SCC 3-06-014-01 (proposed)

Flared gas would contain CO_2, H_2S and CH_4. Some raw natural gas is usually fed to the flare to increase combustion temperatures; combustion is usually 98 percent complete and emissions are primarily SO_2. Flares are used only when an associated industry such as a sulfur recovery plant is not necessary or economically feasible. Two basic types: (1) ambient condition flare with a natural gas pilot, and (2) modern smokeless type with fuel and steam injection.

Vent

No SCC code because venting is not allowed because of the safety hazard of H_2S. Some venting might occur if a flare were accidentally extinguished by winds.

Legends (cont.)

Incinerator, SCC 3-06-014-02 (proposed)

A tail gas incinerator is an elaborate flare. An incinerator is a special combustion chamber with raw gas and oxygen fed to it to optimize combustion. Combustion of H_2S and CO_2 is essentially complete resulting in emissions of SO_2.

III Sulfur Recovery Plant

SCC 3-01-032-01	mod-claus	2 stage
3-01-032-02	mod-claus	3 stage
3-01-032-03	mod-claus	4 stage
3-01-032-99	other/not classified	

SIC 2819

Figure 1C is a flow diagram of a 2 stage claus sulfur recovery plant.

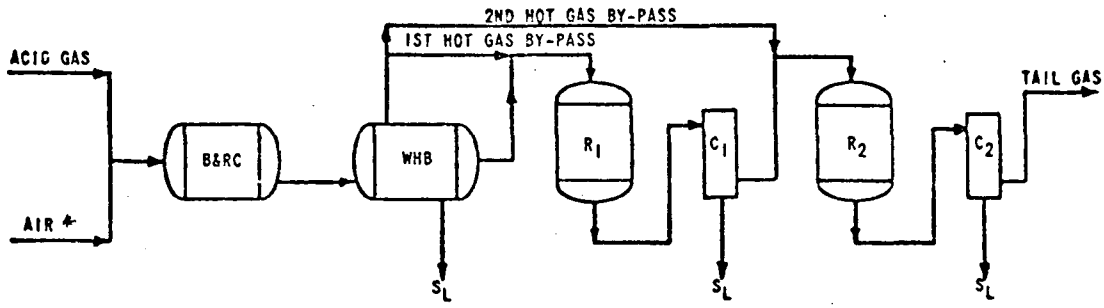

LEGEND

B	- BURNER	R_2	- SECOND CATALYTIC CONVERTER
RC	- REACTION CHAMBER	C_1	- FIRST CONDENSER
WHB	- WASTE HEAT BOILER	C_2	- SECOND CONDENSER
R_1	- FIRST CATALYTIC CONVERTER	S_L	- LIQUID SULFUR

* SUFFICIENT AIR IS ADDED TO BURN 1/3 OF TOTAL H_2S TO SO_2 AND ALL HYDROCARBON TO CO_2

Figure 1C

Flow diagram of a two-stage claus sulfur recovery plant

j Flare, coded as control equipment

Flared gas would contain CO_2 and H_2S. Combustion is usually 98 percent complete and emissions are primarily SO_2. If combustion temperatures are low, then some HC may be emitted.

Legends (cont.)

Incinerator, coded as control equipment

An incinerator is a flare with air premixing. An incinerator is a special combustion chamber with fuel gas and air fed to it to maintain high combustion temperatures with the resulting combustion of H_2S and hydrocarbons essentially complete. Emissions are SO_2, CO_2, N_2 and H_2O.

k Elemental sulfur

The sulfur recovery plants burn gas streams rich in H_2S with air over catalysts to convert the H_2S to SO_2 and then condense the sulfur out of the gas stream. The best known and most widely used system is the Claus Process, with plants having either 1, 2 or 3 stages of catalytic converters, depending on the H_2S content of the feed gas and/or the desired efficiency of recovery. Three stage plants are most efficient, but still yield minor emissions of SO_2.

IV Gas Processing Plant - SIC 1311

Most gas wells contain enough natural gas, butane and propane to warrant processing plants for recovery of these liquifiable constituents. The natural gas is then ready for the market unless H_2S is present, in which case the gas goes to a sweetening plant. The most common method of recovery is a bubble plate column with a gas-oil as an absorbent. This gas-oil is rich in light HC, is stripped of propane, butane and natural gasoline constituents, cooled and returned to the absorber. Figure 1D illustrates dehydration of gas as it enters a processing plant. Figure 1E is a schematic flow diagram of a large volume gas processing installation.

l Exhaust

These emissions are from engines which burn both natural gas and gasoline and diesel fuel. SCC codes 2-02-002-01
2-02-002-02
2-02-003-01
2-02-004-01
2-02-004-02

m Natural Gas

The lightest forms of natural gas are methane (CH_4) and ethane (C_2-H_6). This gas mixture is the end product desired for storage and sale to pipelines and consumers.

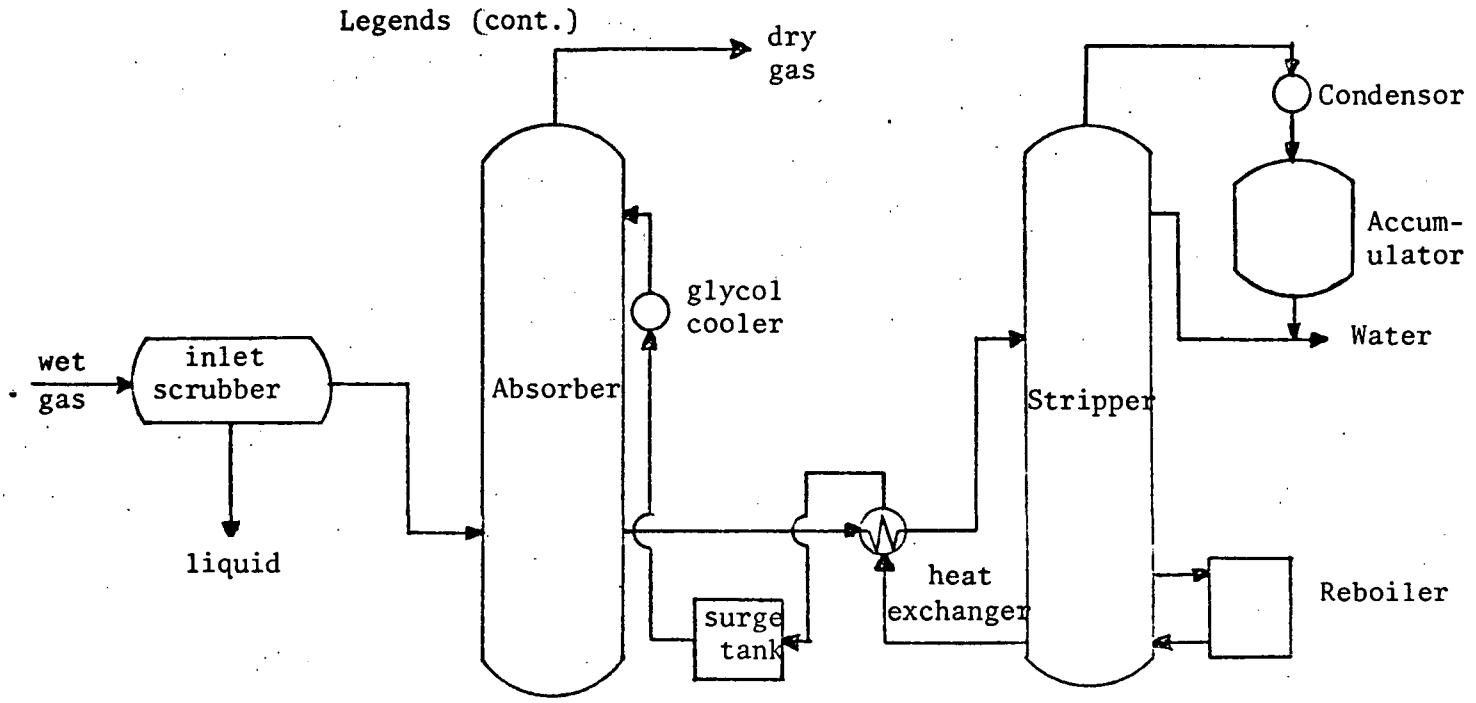

Figure 1D

Flow diagram of
a typical di-ethylene glycol dehydration plant

n Liquefied petroleum gas (LPG)

Natural gases with three carbon atoms (propane) and four carbon atoms (butane) are easily compressed and handled as liquids. Liquified petroleum gases are stored and sold to consumers as liquids which then vaporize when used.

o Higher hydrocarbons

Gas processing plants recover small amounts of hydrocarbons with five or more carbon atoms and if quantities are great enough, they are pipelined to petroleum refineries.

Legends (cont.)

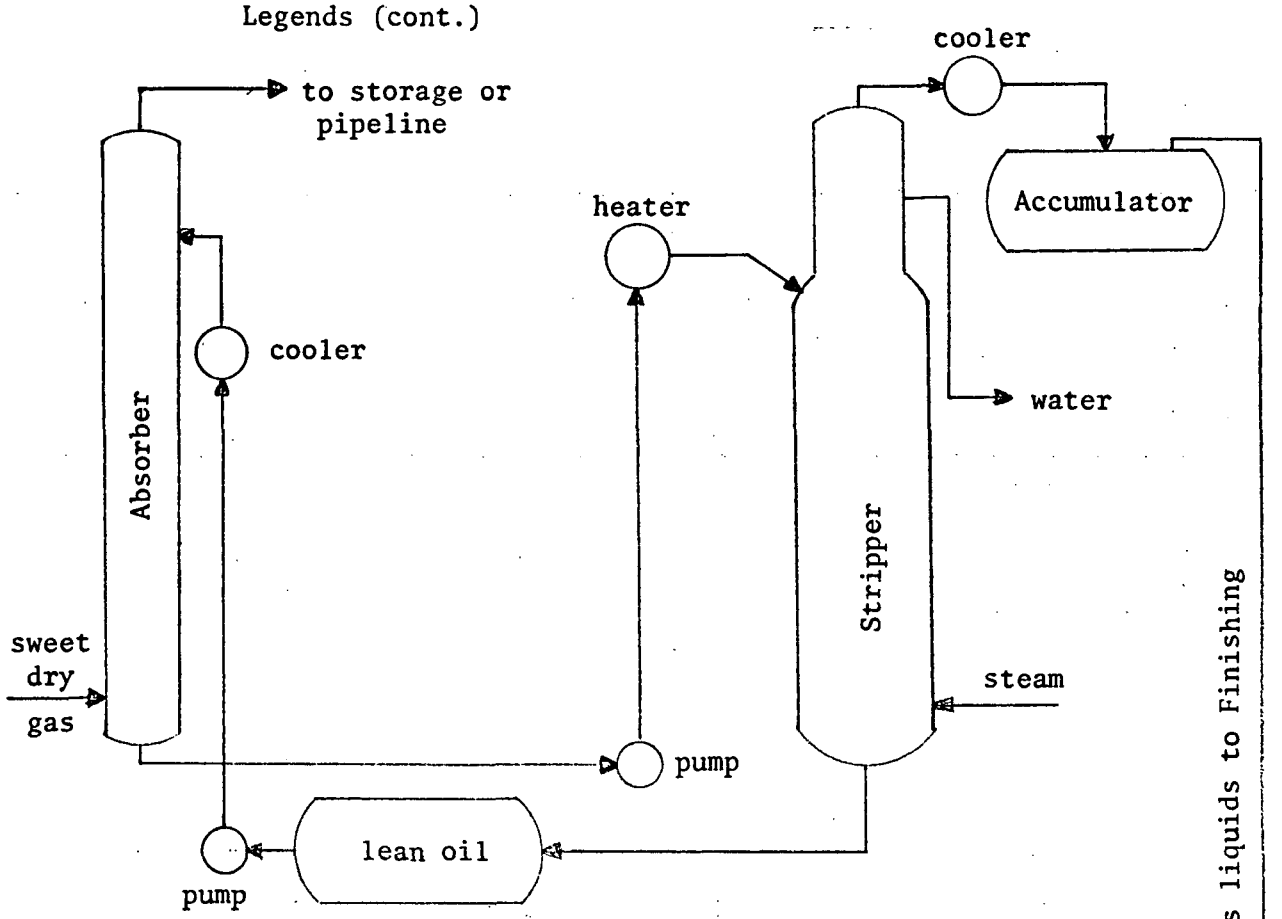

(1) Separation of natural gas from liquefiable constituents of natural gas.

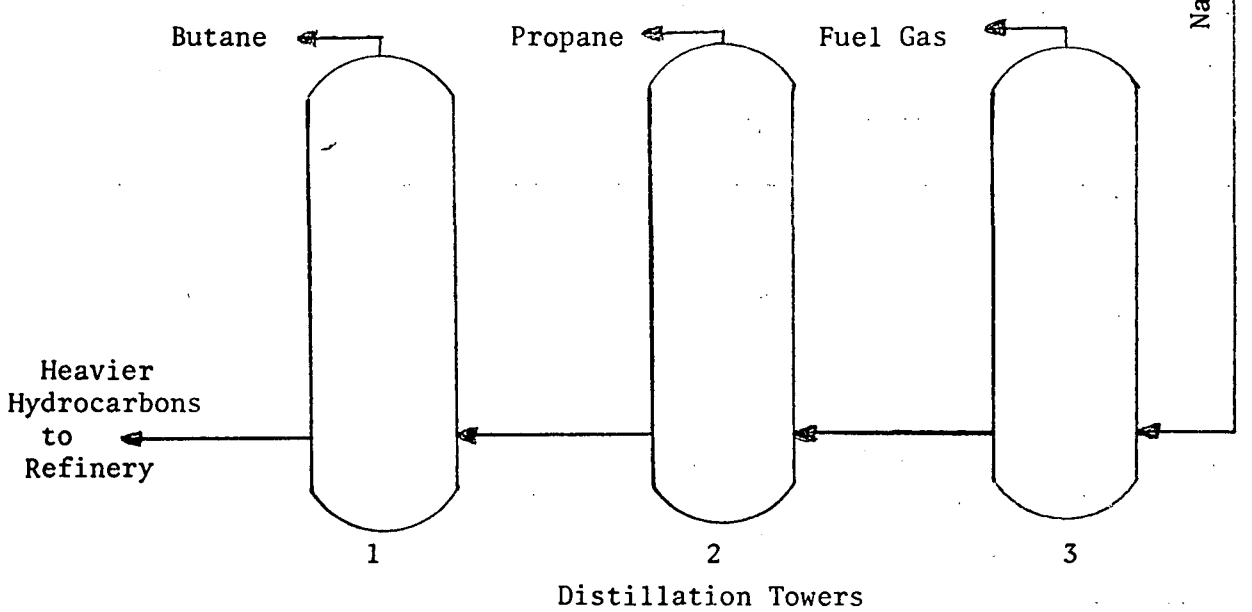

(2) Processing natural gas liquids into pure components

Figure 1E
Schematic of a gas processing plant

There are many processes designed to sweeten gas ranging from the very simple iron sponge process to the more complicated and more expensive processes such as the amine processes or the Selexol process. Twenty-seven specific processes have been identified and are discussed in this report. The bulk of the material is drawn from Maddox (1974), Gas and Liquid Sweetening.

Of the processes mentioned, eleven can be described as out-dated, inefficient, or good only for special applications; two others are effective for H_2S removal only when large amounts of CO_2 are present. The remaining fourteen processes consist of twelve amine or amine-related methods and two other effective processes. Although there is no listing of the number of plants using each type of process, Maddox concurs with other experts in the gas sweetening industry when he states that amine or amine-related processes are the most widely used for the commercial removal of H_2S from natural gas streams.

Gas sweetening processes can best be divided into four major categories: 1) amine and amine-type processes; 2) carbonate and other chemical processes; 2) physical absorption methods and 4) solid bed sweetening processes.

AMINE PROCESSES

The amine processes were developed to remove high concentrations of H_2S in large volumes of gas at high pressures. At the present time the alkanolamines are the most generally accepted and widely used of the many available solvents for the removal of H_2S and CO_2. Primarily because of their reactivity and availability at low cost the alkanolamines have

achieved a position of prominence in the gas sweetening industry. (Maddox, 1974, p. 44). The three alkanolamines generally used in gas sweetening are: monoethanolamine (MEA), diethanolamine (DEA) and triethanolamine (TEA). Of these three MEA is usually preferred.

A diagram of the flow of a basic amine process system is shown in Figure 2.

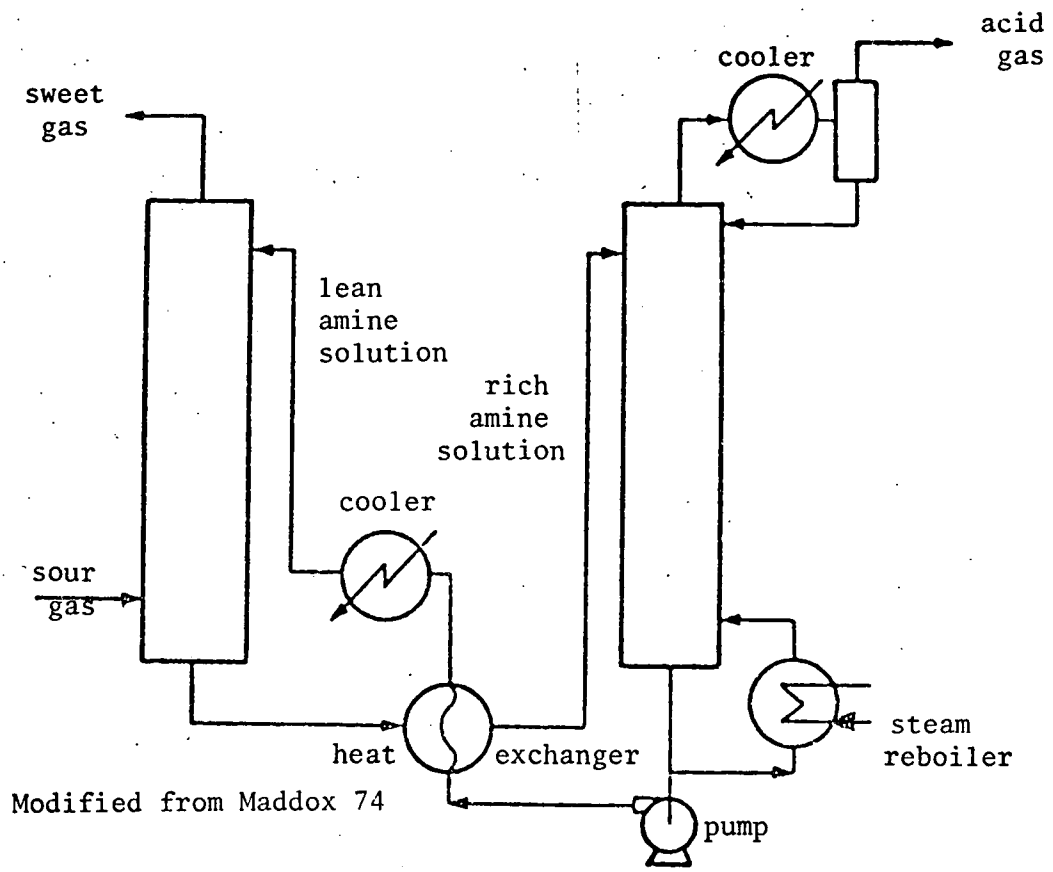

Modified from Maddox 74

Figure 2

Flow diagram of basic amine process for gas sweetening

Monoethanolamine

MEA is the strongest base of the three amines and, therefore, reacts most rapidly with the acid gases. MEA removes both hydrogen sulfide and carbon dioxide; it is generally considered to be non-selective between these two acid gases. With the lowest molecular weight of the common amines, MEA has a greater carrying capacity for acid gases on a unit weight or volume basis. This generally means less solution circulation is necessary to remove a given amount of acid gases. In addition, MEA is chemically stable, which minimizes solution degradation; it can be separated easily from the acid gas constituents by steam stripping.

MEA reacts irreversibly with carbonyl sulfide and carbon disulfide. This results in solution loss and in the buildup of reacted solids in the MEA solution. MEA has a higher vapor pressure than the other amines. This can result in significant solution losses through vaporization. This problem usually can be overcome by a simple water wash of the sweetened gas stream.

The rate of absorption of CO_2 in MEA is less than that of H_2S. The process is not considered selective, however, because carbon dioxide is readily absorbed and essentially will be completely removed when treating natural gas for H_2S removal to pipeline specifications.

MEA will easily reduce acid gas concentrations to pipeline specifications (generally less than 0.25 grains per 100 cu ft). By proper design and operation, the acid gas content can be reduced as low as 0.05 grains per 100 cu ft (Maddox 1974, p. 49).

Diethanolamine

The DEA process is similar to the MEA process. The primary difference is that DEA reacts either very slowly or not at all with carbonyl sulfide

and carbon disulfide. This characteristic renders DEA especially useful for sweetening gas streams where these contaminants are prevalent. DEA is also non-selective and will remove both H_2S and CO_2. In some instances, utilizing the DEA process, it is difficult to reduce H_2S concentrations to pipeline specifications. DEA, however, is much less volatile than MEA and, therefore, has lower losses of amine solution due to vaporization (Maddox 1974, p. 49).

Triethanolamine

Although TEA was the first commerically-applied amine sweetening process, it has been largely displaced by MEA and DEA processes. TEA is less reactive with acid gases and has less acid gas carrying capacity per volume of solution. The TEA process is unable to reduce H_2S content to general pipeline specifications. The principle advantage of TEA is its selectivity for H_2S. This selectivity is not significant, however, and today TEA does not have widespread usage as an industrial sweetening agent (Maddox 1974, p. 50).

Methyldiethanolamine

A fourth alkanolamine process exists utilizing methyldiethanolamine. It is not commercially competitive with the MEA or DEA processes, but may have some value in special applications (Maddox 1974, p. 49).

Glycol-Amine

The glycol-amine process utilizes MEA (or occasionally DEA) in combination with a glycol to simultaneously sweeten and dehydrate the gas stream (Maddox 1974, p. 48). The solution consists of 10-30% MEA; 45-85% glycol and 5-25% water by weight. This combined process unit costs less than separate MEA and glycol units.

The main disadvantages of glycol-amine systems are: a) high vaporization losses of MEA due to high regeneration temperatures; b) intricate corrosion problems; c) its best application is for gas streams not requiring low water dewpoint control and d) reclaiming must be by vacuum distillation.

New Amine-Type Processes

Several variations of amine processes are currently being used for gas sweetening. Among these are the Shell Sulfinol process, diglycolamine, and an SNPA-DEA process. Maddox (1974, p. 157) classifies these as new amine-type processes.

Diglycolamine (DGA)

The treating agent in the DGA process is 2(2-amino-ethoxy) ethanol. The process is non-selective and will remove both H_2S and/or CO_2. DGA has several advantages over MEA. DGA can be used in concentrations of 50 to 70 percent which results in approximately twice as much acid gas pickup per gallon as an MEA solution in the 15 to 20 percent range. Use of higher concentrations results in decreased circulation rates, heat requirements and horsepower. DGA can be used at lower temperatures without protection of the exposed solution. This makes it suitable for cold weather areas.

Sulfinol

The Sulfinol process came into commercial use in 1964. It was patented by Shell Development Company as a replacement for systems using MEA. Sulfinol is a solvent composed of sulfolane, an alkanolamine, and water, in varied amounts according to application (Kirk & Othmer 1951, p. 384). Sulfinol is a unique process that involves both a physical solvent and a chemically reactive agent in the sweetening solution, thereby,

combining both the chemical and physical absorption methods often used separately in gas sweetening.

Sulfinol is equivalent to MEA at lower partial pressures, but it is superior to MEA at high partial pressures. The best application of this process is in gas streams with relatively high ratios of H_2S (H_2S to CO_2 ratios 1:1 or greater). Sulfinol absorbs more hydrocarbons than its MEA equivalent; it also removes thiols and carbonyl sulfide. Special treatment for the removal of hydrocarbons from the acid gas stream will be necessary prior to the sulfur plant if the content is too high for feed to a Claus sulfur-recovery operation (Kirk & Othmer 1951, p. 384).

SNPA-DEA

The SNPA-DEA process is similar to a conventional amine process but utilizes a 20-30 percent by weight of DEA solution. Solution circulation rate is set at 1.0 to 1.3 moles of DEA per mole of acid gas. Reboiler heat duty ranges from 0.9 to 1.1 pounds of steam per U.S. gallon of solution. The higher weight concentration of DEA solution is utilized so that the number of moles of DEA per gallon of solution is essentially the same as for a 15-20 percent by weight MEA solution. Because of the lower vapor pressure of DEA the partial pressure of DEA over the 30 percent by weight solution is actually less than the partial pressure of MEA over a 15 percent by weight MEA solution.

The sweetened gas H_2S content will normally run from 0.15 to 0.05 grains per 100 scf. This is usually well within pipeline specifications (0.25 grains per 100 scf). As with MEA units CO_2 is essentially quantitatively removed. Unlike MEA units carbonyl sulfide is removed without degradation of the DEA solution (Maddox 1974, p. 179).

CARBONATE AND OTHER CHEMICAL PROCESSES

Hot Potassium Carbonate (uncatalyzed)

There are some similarities between process flows for the hot potassium carbonate process and the amine process, however, in the hot potassium carbonate system the absorber operates at a high temperature. This enables a considerable savings in heat exchange and heating equipment. Use of high temperatures increases the solubility of potassium bicarbonate in solution. This permits the use of a concentrated K_2CO_3 solution and increases the carrying capacity for acid gases per gallon of solution (Maddox 1974, p. 99).

The hot potassium carbonate system is very effective where 5 to 8 percent acid gases are present in large quantities. However, if no CO_2 is present potassium bisulfide is very difficult to regenerate. Therefore, this process is not suitable for sweetening gas mixtures containing little or no CO_2. The flow diagram for this process is shown in Figure 3.

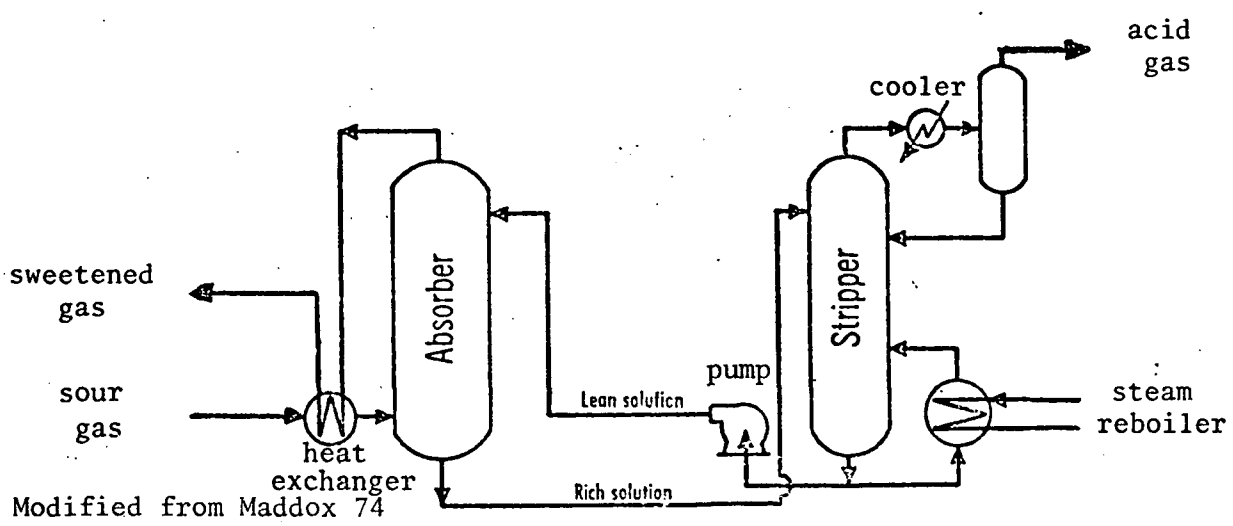

Figure 3

Flow diagram of conventional hot carbonate process

Catacarb Process

This is a variation of the basic hot potassium carbonate process. The Catacarb Process uses amine borates to increase the activity of the hot potassium carbonate solution. A potassium carbonate solution is not highly ionized and has few hydroxyl ions which can react directly with CO_2. Therefore, this process acts on the assumption that CO_2 must first react with water or a hydrate to form carbonic acid. Next, the carbonic acid reacts with a carbonate ion to form two bicarbonate ions.

These carbonate solutions frequently become contaminated by potassium formate and potassium sulfate. These contaminants have a negative effect on solution activity. They can be removed or maintained at a satisfactory level in the solution, however, to do so is expensive and results in potassium carbonate losses (Maddox 1974, p. 112).

Benfield Process

This is a hot potassium carbonate process which uses diethanolamine as the activation agent. The process flow and operating conditions for the Benfield Process are essentially the same as those for the uncatalyzed hot potassium carbonate process.

DEA-Carbonate

This process is a combination of the diethanolamine (DEA) and the hot potassium carbonate processes. The DEA-Carbonate method requires a high percentage of CO_2 to operate effectively. In certain applications this process can save as much as 10 percent in operation costs over the DEA process alone.

In the DEA-Carbonate process, gas entering the absorber first contacts the activated potassium carbonate solution. Then it flows to the upper

section where it is treated with the DEA solution. This dual method enables a more complete removal of the acid gases. The amine and carbonate solutions are segregated in both the absorber and regenerator. Spent DEA from the absorber is preheated by the carbonate solution before being introduced to the lower section of the regenerator. Because the potassium-carbonate solution is cooled before it enters the regenerator, and to maintain proper stripping steam distribution in the regenerator, both the potassium carbonate section and the DEA section are reboiled (Maddox 1974, p. 116).

Giammarco-Vetrocoke (G-V) Process

The G-V process uses a catalyst to increase the rate of absorption of CO_2 in alkali carbonate solutions. The G-V process is really a multiple process which can be used to accomplish three objectives: 1) as a CO_2 removal process; 2) as a highly selective removal of H_2S and 3) as a process with which modifications enable the removal of CO_2 and H_2S simultaneously (Maddox 1974, p. 117).

Seaboard Process

This process was developed by the Koppers Company in 1920. It is essentially a regenerative process without recovery of the product removed. The Seaboard method uses an aqueous solution with 3.0 to 3.5 percent sodium carbonate for absorbing H_2S in a bubble tray or packed tower. The foul solution is pumped to a second tower where it is regenerated by blowing air through it to obtain release of the absorbed H_2S, which is emitted to the atmosphere (Kirk & Othmer 1951, p. 384).

The Seaboard process was the first regenerative liquid process for H_2S removal used commercially on a large scale. It is no longer of major industrial significance (Maddox 1975, p. 121).

Vacuum Carbonate Process

This is a modification of the Seaboard process which also used 3.0 to 3.5 percent sodium carbonate as an absorbent. The process is especially adapted to the recovery of H_2S from manufactured gases and is primarily used for treating coke-oven gases (Kirk & Othmer 1951).

Phosphate Process

The phosphate process developed by Shell Development Company employs a solution of potassium orthophosphate for absorbing H_2S. Regeneration is accomplished by steam stripping.

This phosphate method involves a two stage absorption process with the completely regenerated solution entering the final stage in contact with effluent gases and partially regenerated solution entering the first stage. In this way, the saving of steam is accomplished. This is important because complete reactivation of the solvent is more expensive in this process than in the amine processes.

Tripotassium Phosphate Process

This process, introduced by Shell Oil, has been largely replaced by the amine process. However, it does have some advantages for special applications. The advantages of this method are: 1) tripotassium phosphate is not volatile; 2) it is insoluble with hydrocarbons and 3) tripotassium phosphate does not react with carbonyl sulfide (Maddox 1974, p. 124).

Sodium Phenolate Process

This process involves a concentrated solution of sodium phenolate in a heat conversion-heat regenerative flow process. The solution has a high capacity for H_2S but a low efficiency for H_2S removal. This process seldom achieves necessary specifications; only about 90 percent of the H_2S in sour gas is removed. For these reasons most sodium phenalate plants have been replaced by other processes (Maddox 1974, p. 125).

Phenoxide Process

The phenoxide process uses a solution of sodium phenoxide as an absorbent. Operating difficulties encountered in this process have caused the few plants in which this process was utilized to convert to other processes.

Alkacid (Alkazid) Process

This process was developed and used in Germany prior to World War II. The Alkacid process is not presently used in the United States.

PHYSICAL ABSORPTION METHODS

General

All physical solvents mentioned here have a relatively high solubility for the heavy hydrocarbons. This is especially true of aromatic and unsaturated hydrocarbons. For this reason, particular care must be taken in the regeneration cycle of all of the processes when there are unsaturated or aromatic hydrocarbons in the sour gas stream being treated. Otherwise, the acid gases from the unit will be completely unsuitable for feed gas to a Claus sulfur recovery unit (Maddox 1974, p. 155).

Water Absorption

Water is a satisfactory solvent for removing acid gases from sour gas streams. This is a good process to use as a companion to an amine process.

The water wash process followed by an amine process clean-up requires a 12 to 15 percent lower investment. Additionally, there is approximately a 50 percent savings in operational costs of an equivalent amine unit designed to do the total sweetening job (Maddox 1974, p. 129). The diagram of a typical system is shown in Figure 4.

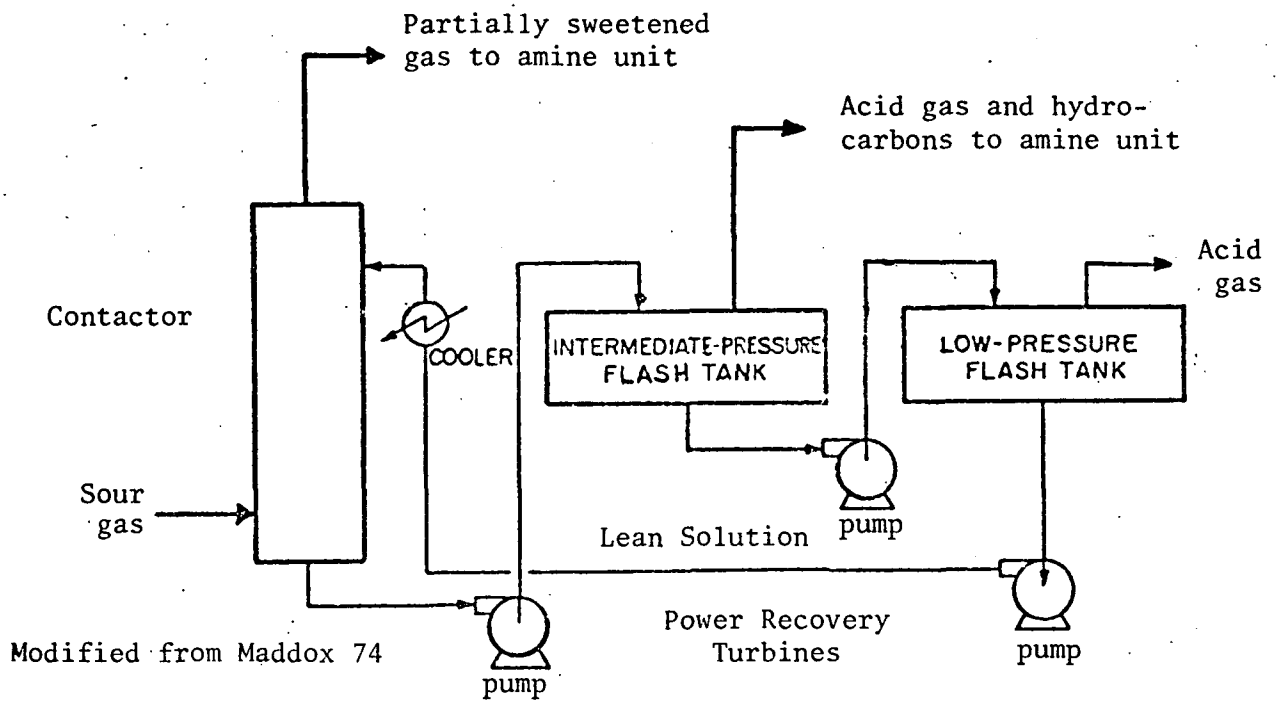

Figure 4

Flow diagram of a typical water wash absorption unit

Fluor Solvent Process

This process originated from an extensive testing and evaluation program searching for physical absorbents. Four solvents were finally selected: 1) propylene carbonate 2) glycerol triacetate 3) butoxyl diethylene glycol acetate 4) methoxy triethylene glycol acetate. These solvents are primarily intended for the removal of CO_2 from high pressure gas streams. There are indications that some of them may have sufficient selectivity for H_2S that they can be used under certain conditions for preferential removal of H_2S from a sour gas stream (Maddox 1974, p. 135).

Selexol Process

The solvent in this process is dimethyl ether of polyethylene glycol (DMPEG). DMPEG has significantly greater solubility for H_2S than for CO_2. This enables some selectivity for H_2S to be designed into the system.

Advantages of this process are 1) lower initial plant costs and lower operating costs than MEA or potassium carbonate 2) DMPEG is more selective for H_2S than MEA 3) DMPEG has a better ability to treat for H_2S removal than does hot potassium carbonate.

Rectisol-Purisol Process

The Rectisol process uses a refrigerated solution of methanol as a solvent. The Rectisol process has been used primarily in the treatment of synthesis gas for removal of CO_2.

The Purisol process uses a solution of N-methyl-2 pyrrolidone (NMP-Purisol). This process has a high absorptivity for H_2S and indications of selectivity between H_2S and CO_2.

This process is primarily used for sweetening synthesis gas, but there are potential applications for it in the natural gas field.

Estasolvan Process

The Estasolvan Process utilizes the solvent tri-n-butyl phosphate (TBP). This process can be used for either sweetening only or sweetening combined with liquid hydrocarbon recovery. In addition to removing H_2S, TBP will remove mercaptans and other organic sulfur compounds (Maddox 1974, p. 147).

Others

Various other physical solvents can be used in natural gas sweetening. Any of these solvents might be applicable depending upon plant design and nature of the gas to be sweetened. Possible solvents include: methyl cyanoacetate, glutaronitrile, propylene carbonate, trimethylene cyanohydrin, N-methyl pyrrolidone, dimethyl formamide, DEG dimethyl ether, sulfolane (Maddox 1974, p. 151).

SOLID BED SWEETENING PROCESSES

General

Solid bed sweetening processes are based on the adsorption of the acid gases on the surface of the solid sweetening agent or on the reaction with some component on that surface. These sweetening processes are not as widely used as the previously discussed liquid processes (Maddox 1974, p. 181).

Solid bed sweetening is usually best applied to gases containing low to medium concentrations of H_2S or mercaptans. Most of the solid processes are highly selective and do not normally remove significant quantities of CO_2. This means the H_2S stream from the process is usually of high purity.

Pressure has relatively little effect on the adsorptive capacity of a sweetening agent. Some solid bed processes are batch type and have low investment and operating costs (Maddox 1974, p. 181).

Iron Oxide (Sponge) Or Dry Box Process

This is one of the oldest known methods for removal of sulfur compounds from gas streams. The dry box process was introduced in England in the mid-19th century. It still has a place, today, in areas of special application.

The simplest process involves contact of the sour gas with hydrated ferric oxide. This results in the formation of ferric sulfide. When exposed to the air, ferric sulfide is oxidized to sulfur and ferric oxide. This can be used to react with additional hydrogen sulfide. The reaction-regeneration cycle can be repeated several times.

Eventually the sulfur will cover most of the surface of the oxide particles, thereby causing loss of activity of the adsorbent and excessive pressure drop through the bed.

Several variations of the iron oxide process exist. These developments primarily differ in size and design of the vessel to contain the iron oxide.

Molecular Sieves

Crystalline sodium calcium alumino silicates can be used for selective removal of H_2S and other sulfur compounds from natural gas streams. Some crystalline forms of these materials are found naturally. The common crystalline forms used in commercial absorption are synthetically manufactured materials. The activated crystalline material is porous. The pore openings in a given structure are all exactly the same size and are determined by the molecular structure of the crystal and the size of molecules present in the crystal. The pores are formed by driving off water of crystallization that is present during the synthesis process. The exactness of the pore size and distribution has given rise to the name molecular sieves, which is used almost universally to describe these materials.

These materials are marketed under the name Molecular Sieves by the Linde Division of Union Carbide Corporation and the Davison Chemical Co. Division of W. R. Grace and Co.

Molecular sieves have the large surface area typical of any solid adsorbent. In addition, however, molecular sieves have highly localized polar charges. These localized charges are the reason for the very strong adsorption of polar or polarizable compounds on molecular sieves. This also results in much higher adsorptive capacities for these materials by molecular sieves than by other adsorbents, particularly in the lower concentration ranges (Maddox 1974, p. 188).

EFCO Process

Engineers and Fabricators Company (EFCO) has developed another molecular sieve process. In the EFCO process sour gas enters the unit through a separator and filter which will remove all liquids and entrained solids. The sour gas then flows downward through two molecular sieve treating beds and leaves the plant as sweetened gas. A portion of the sweet gas stream is removed and flows downward through a third bed which has been regenerated but is still hot. The sweetened gas removes heat from the bed and flows through a gas-to-gas exchanger before going through the regeneration heater. Following heating, this gas flows upward through the bed on regeneration cycle heating it and removing the adsorbed H_2S and sulfur compounds. The gas from the bed then flows through heat exchange with the sweetened gas to the tower and then through a cooler.

Entrained liquids are removed in a separator before the regeneration stream flows into an absorber where approximately 90 percent of the H_2S is removed by circulating solvent. The regeneration gas is then recycled to

the inlet gas stream to the plant. The EFCO process rejects from the gas stream only the acid gas constituents and burns only the amount of gas required to provide regeneration heat (Maddox 1974, p. 193).

Tail Gas Conditioning

Tail gas conditioning involves removing trace quantities of sulfur from gas streams. Usually tail gas processes are a follow-up procedure to another process, for example, the Claus process (Maddox 1974) lists six methods of tail gas conditioning designed to carry the Claus reaction to further completion. All of these processes are very efficient and remove at least 99 percent of the sulfur in the acid gas stream.

II. SECTION FOR EPA PUBLICATION AP-42, COMPILATION OF AIR POLLUTANT EMISSION FACTORS

9. PETROLEUM INDUSTRY

9.2 NATURAL GAS PROCESSING

9.2.1 GENERAL[1]

Natural gas from high-pressure wells is usually passed through field separators to remove hydrocarbon condensate and water at the well. Natural gasoline, butane and propane are usually present in the gas, and gas processing plants are required for the recovery of these liquefiable constituents (see Figure 9.2-1). Natural gas is considered "sour" if hydrogen sulfide is present in amounts greater than 0.25 grains per 100 standard cubic feet. The hydrogen sulfide (H_2S) must be removed (called "sweetening" the gas) before the gas can be utilized. If H_2S is present, the gas is usually sweetened by absorption of the H_2S in an amine solution. Amine processes are used for over 95 percent of all gas sweetening in the United States. Other processes such as carbonate processes, solid bed absorbents and physical absorption methods comprise approximately five percent of the nation's sweetening plants. Emissions data for sweetening processes other than amine-types are very meager.

The major sources of emissions from the natural gas processing industry arise from compressor engines and from acid gas wastes from gas sweetening plants. Compressor engine emissions are discussed in Section 3.3.2, therefore, only gas sweetening plant emissions will be discussed.

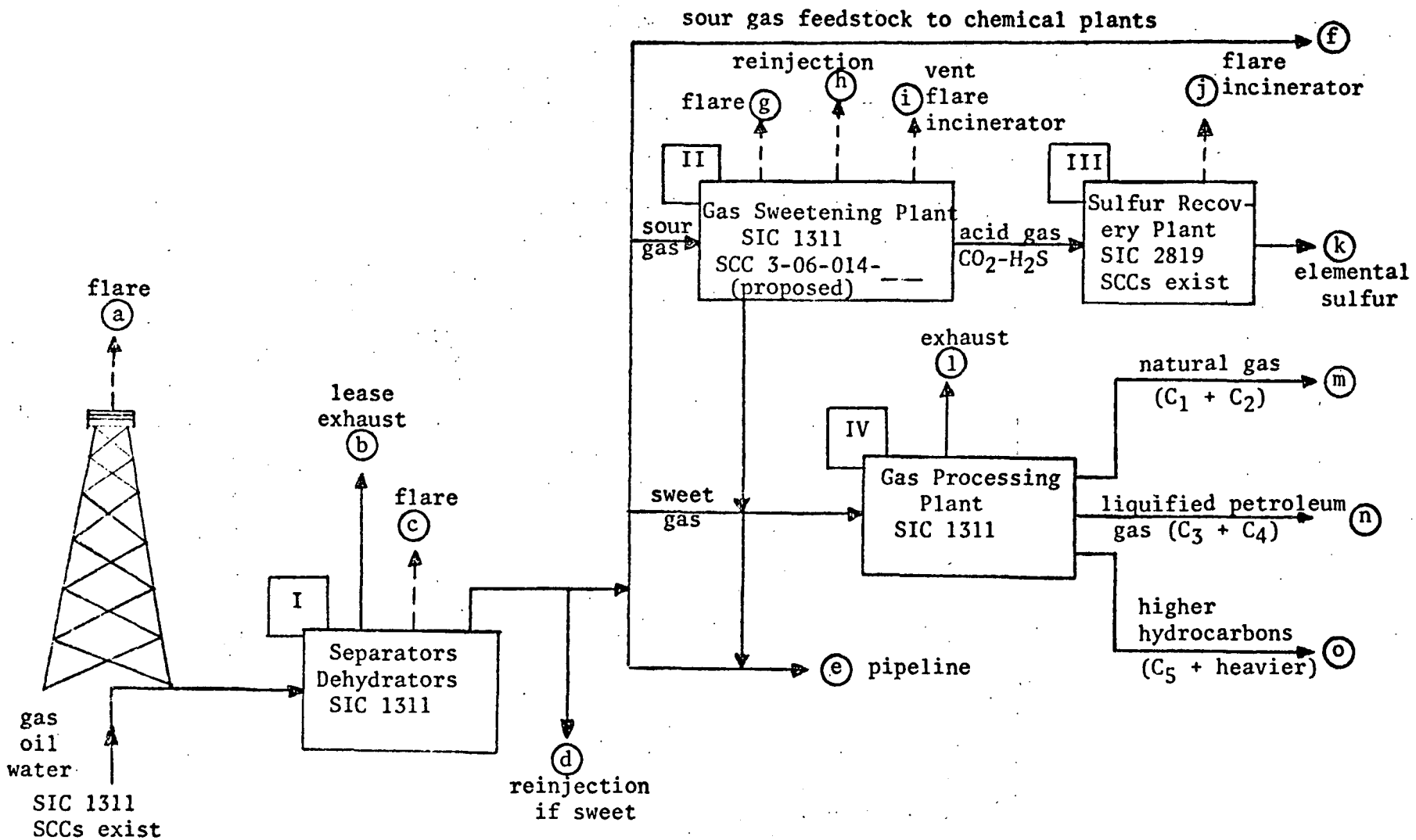

Figure 9.2-1

Flow diagram of the natural gas industry

9.2.2 PROCESS DESCRIPTION[2,3]

There are many available chemical processes for sweetening natural gas. However, at present the most widely-used process for H_2S removal or gas sweetening is the amine type process (also known as the Girdler process), and utilizing various amine solutions for absorbing H_2S. The process is summarized in the following reaction and illustrated in Figure 9.2-2.

$$2\ RNH_2 + H_2S \longrightarrow (RNH_3)_2S$$

R = mono, di, or tri-ethanol
N = nitrogen
H = hydrogen
S = sulfur

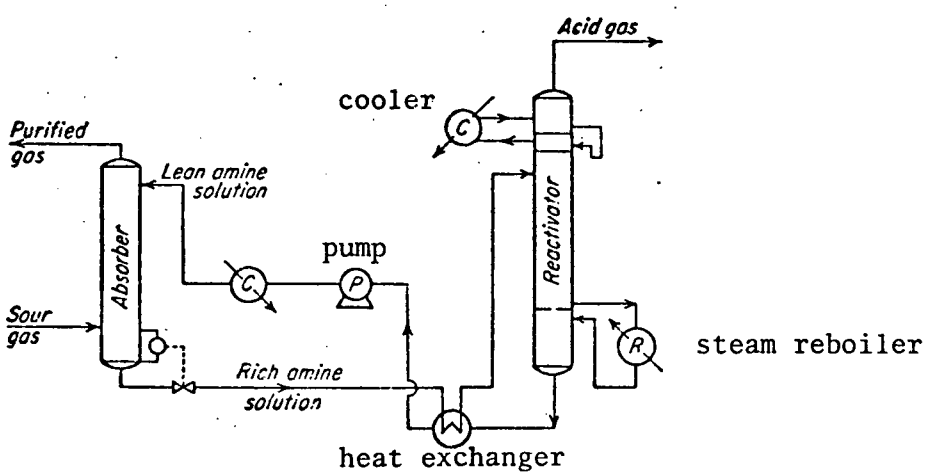

Figure 9.2-2 Flow diagram of the amine process for gas sweetening

The gas is first absorbed in an amine solution (RNH_2) in a bubble-tray tower. The amines form a compound with hydrogen sulfide at low temperatures. The volitale hydrogen sulfide is separated from the relatively nonvolatile amine by steam stripping the amine solution. The complete removal of the hydrogen sulfide from the rich amine solution in turn allows complete purification of the gas in a counter-current absorber. The recovered hydrogen sulfide gas stream may be (1) vented, (2) flared in waste gas flares or modern smokeless flares, (3) incinerated, or (4) utilized for the production

of elemental sulfur or other commercial products. If the recovered H_2S gas stream is not to be utilized as a feedstock for commercial usage, the gas is usually passed to a tail gas incinerator where the H_2S is oxidized to sulfur dioxide and then passed to the atmosphere via a stack.

9.2.3 EMISSIONS[4,5]

Virtually all of the emissions from gas sweetening plants consist of sulfur dioxide, resulting from flaring or incinerating the waste gas. It is very rare, however, for a sweetening plant to exist without a sulfur recovery plant or other commercial plant nearby. The amount of SO_2 emitted by sweetening plants is directly related to the H_2S concentration in the gas sweetening plant intake. Waste gas flares usually burn at temperatures lower than those necessary to completely oxidize all hydrocarbons and yield minor emissions of particulates and hydrocarbons. Modern smokeless flares with fuel gas and steam injection assure complete combustion of all waste gas constituents. Tail gas incinerators are usually operated at temperatures ranging from 1000° to 1200°F. Enough excess air and fuel gas are added to plant tail gas to maintain the above temperature range. At these conditions the combustion of H_2S to SO_2 is over 98 percent complete. Table 9.2-1 lists emissions from gas sweetening plants with smokeless flares or incinerators. Emissions from sweetening plants with adjacent commercial plants such as sulfur recovery or sulfuric acid manufacturing are treated in Sections 5.18 and 5.17, respectively.

Table 9.2-1. EMISSION FACTORS FOR GAS SWEETENING PLANTS [2,4-7]

Type of Process	Particulates	Sulfur Oxides[a] (SO_2)	Carbon Monoxide	Hydrocarbons	Nitrogen Oxides
Amine with smokeless flare or incinerator					
lb/10^6 ft^3 gas processed	Neg	1685 S[b]	Neg	Neg	Neg
kg/10^3 m^3 gas processed	Neg	26.98 S[b]	Neg	Neg	Neg

[a] Emissions are proportional to the mol percent of hydrogen sulfide in gas sweetening plant intake.

[b] S is the H_2S content in mol percent, of the sour gas entering the gas sweetening plant. For example; if H_2S content is 2 percent, the emissions factor would be 1685 x 2 = 3370 lbs/10^6 ft^3 gas sweetened. If H_2S mol percent is unknown and cannot be determined, then use AQCR average H_2S value from Table 9.2-2.

H_2S concentrations are also reported in grains/100 ft^3 and ppm. Conversion factors to mol percents are listed below.

.01 mol % H_2S = 6.264 grains H_2S/100 std ft^3 @ 60°F 29.92"Hg

1 grain/100 std ft^3 = 15.96 ppm (parts per million) of H_2S in natural gas.

Table 9.2-2. AVERAGE HYDROGEN SULFIDE CONCENTRATIONS

IN NATURAL GAS BY AIR QUALITY CONTROL REGIONS

State	AQCR Name	AQCR Number	Average H_2S mol %
Alabama	Mobile-Pensacola-Panama City-Southern Mississippi (FL., MS.)	5	3.30
Arizona	Four Corners (CO., NM., UT.)	14	0.71
Arkansas	Monroe-El Dorado (LA.)	19	0.15
	Shreveport-Texarkana-Tyler (LA., OK., TX.)	22	0.55
California	Metropolitan Los Angeles	24	2.09
	San Joaquin Valley	31	0.89
	South Central Coast	32	3.66
	Southeast Desert	33	1.0
Colorado	Four Corners (AZ., NM., UT.)	14	0.71
	Metropolitan Denver	36	0.1
	Pawnee	37	0.49
	San Isabel	38	0.3
	Yampa	40	0.31
Florida	Mobile-Pensacola-Panama City-Southern Mississippi (AL., MS.)	5	3.30
Kansas	Northwest Kansas	97	0.005
	Southwest Kansas	100	0.02
Louisiana	Monroe-El Dorado (AR.)	19	0.15
	Shreveport-Texarkana-Tyler (AR., OK., TX.)	22	0.55
Michigan	Upper Michigan	126	0.5
Mississippi	Mississippi Delta	134	0.68
	Mobile-Pensacola-Panama City-Southern Mississippi (AL., FL.)	5	3.30
Montana	Great Falls	141	3.93
	Miles City	143	0.4
New Mexico	Four Corners (AZ., CO., UT.)	14	0.71
	Pecos-Permian Basin	155	0.83

Table 9.2-2 (continued). AVERAGE HYDROGEN SULFIDE CONCENTRATIONS IN NATURAL GAS BY AIR QUALITY CONTROL REGIONS

State	AQCR Name	AQCR Number	Average H_2S mol %
North Dakota	North Dakota	172	1.74[a]
Oklahoma	Northwestern Oklahoma	187	1.1
	Shreveport-Texarkana-Tyler (AR., LA., TX.)	22	0.55
	Southeastern Oklahoma	188	0.3
Texas	Abilene-Wichita Falls	210	0.055
	Amarillo-Lubbock	211	0.26
	Austin-Waco	212	0.57
	Corpus Christi-Victoria	214	0.59
	Metropolitan Dallas-Fort Worth	215	2.54
	Metropolitan San Antonio	217	1.41
	Midland-Odessa-San Angelo	218	0.63
	Shreveport-Texarkana-Tyler (AR., LA., OK.)	22	0.55
Utah	Four Corners (AZ., CO., NM.)	14	0.71
Wyoming	Casper	241	1.262
	Wyoming (except Park, Bighorn and Washakie Counties[b])	243	2.34

[a] Sour gas only reported for Burke, Williams and McKenzie Counties.
[b] Park, Bighorn and Washakie Counties report gas with an average 23 mol percent H_2S content.

REFERENCES FOR SECTION 9.2

1. Katz, D. L., David Cornell, Riki Kobayashi, F. H. Poettmann, J. A. Vary, J. R. Elenbaas, and C. F. Weinaug. Handbook of Natural Gas Engineering. McGraw-Hill Book Company, New York. 1959, 802 pp.

2. Maddox, R. N. Gas and Liquid Sweetening. Second edition. Campbell Petroleum Series, Norman, Oklahoma. 1974, 298 pp.

3. Kirk, Raymond E. and Donald F. Othmer, editors. Encyclopedia of Chemical Technology. Interscience Encyclopedia, Inc., New York. 1951, Volume 7.

4. Sulfur Compound Emissions of the Petroleum Production Industry. Ecology Audits, Inc. Report to EPA Control Systems Laboratory NERC, RTP. December 1974.

5. Unpublished stack test data for gas sweetening plants. Ecology Audits, Inc., subsidiary of Core Laboratories, Dallas, Texas. 1974.

6. Control Techniques for Hydrocarbon and Organic Solvent Emissions from Stationary Sources. U.S. DHEW, PHS, EHS, National Air Pollution Control Administration, Washington, D.C. Publication Number AP-68. March 1970, p. 3-1 and 4-5.

7. Control Techniques for Nitrogen Oxides from Stationary Sources. U.S. DHEW, PHS, EHS, National Air Pollution Control Administration, Washington, D.C. Publication Number AP-67. March 1970, section 7.3.

III. RESEARCH LEADING TO THE DEVELOPMENT OF EMISSION FACTORS FOR NATURAL GAS SWEETENING

INTRODUCTION

The development of emission factors for the natural gas processing industry began with an intensive investigation of the industry itself. This investigation determined the important emission points and types of pollutants emitted from the different facilities and processes associated with gas processing. After defining the important emission points and the pollutant types the literature was researched to determine a fundamental data base and to suggest an approach for emission factor development. Consultation with gas engineers, plant personnel and air pollution specialists was utilized to fill gaps in the data base, as well as to improve or check its accuracy.

EMISSION POINTS

The initial investigation of the gas processing industry determined that compressor engine exhausts and gas sweetening plant tail gases were responsible for the major share of the emissions produced by the industry. Emissions from compressor engines have already been described in AP-42 so attention was concentrated on the emissions from gas sweetening plants.

Gas sweetening plant tail gases are usually flared or incinerated if the sulfur is not removed. Flares are usually elevated, smokeless types in order to safely dissipate the heat and diffuse any emitted vapors. Some small installations still use waste gas flares which are less efficient

than the modern flares. Incinerators utilize air premixing to insure good combustion and incinerator gases are usually exhausted to the atmosphere via a tall stack.

SULFUR COMPOUND EMISSIONS

Sour natural gas contains hydrogen sulfide (H_2S) in widely varying concentrations, plus trace amounts of organic sulfur compounds such as mercaptans, carbonyl sulfide (COS) and carbon disulfide (CS_2). H_2S is rarely less than 95 percent of the total sulfur content. Tail gases from sweetening plants contain primarily H_2S, SO_2, CO_2, N_2 and H_2O. Since combustion of hydrogen sulfide to sulfur dioxide is over 98 percent complete, SO_2 is considered the major pollutant emitted by gas sweetening plants.

OTHER EMISSIONS

Incinerators and flares at gas sweetening plants operate at temperatures ranging from approximately 900° to 1200°F. At these temperatures the combustion of H_2S to SO_2 is over 98 percent complete. This temperature range is too low for significant creation of oxides of nitrogen to be a problem; therefore, NO_x was not considered as an emitted pollutant.

Particulates, smoke and hydrocarbons are byproducts of incomplete combustion. Incomplete combustion can result from insufficient fuel value in the gas mixture, inadequate combustion air or inadequate mixing of fuel and air. Since it is necessary to insure good combustion of H_2S to SO_2, all of the above factors are considered in incinerator and flare design and operating procedures. Therefore, smokeless flares and incinerators usually do not produce significant amounts of visible emissions, particulate material, or hydrocarbons.

However, little information on hydrocarbon emissions from gas sweetening plant tail gases is available. Based on unpublished stack test data, it was determined that the efficient combustion of sweetening plant tail gases results in a negligible production of hydrocarbon emissions. A typical sample hydrocarbon analysis of waste gas as it leaves a gas sweetening plant is shown in Table 1.

Table 1

HYDROCARBON ANALYSIS OF No. 1 A Acid GAS SAMPLE

COMPONENT	MOL PER CENT	G P M
Hydrogen	0.18	
Hydrogen Sulfide	81.95	
Carbon Dioxide	17.31	
Nitrogen	0.02	
Methane	0.11	
Ethane	0.06	0.015
Propane	0.07	0.020
iso-Butane	0.01	0.003
n-Butane	0.02	0.006
iso-Pentane	0.01	0.004
n-Pentane	0.01	0.004
Hexanes	0.05	0.021
Heptanes plus	0.20	0.093
	100.00	0.166

DEVELOPMENT OF EMISSION FACTOR

The amount of SO_2 emitted by a gas sweetening plant depends upon several parameters, and in order to develop a valid emission factor, certain assumptions were made.

The major waste product from gas sweetening is the acid gas stream. This acid gas, if not utilized for various commercial purposes, is usually disposed of by burning. Regardless of whether the acid gas is burned in a flare or incinerator, combustion of H_2S to SO_2 was assumed to be essentially 100 percent complete.

Sweetening of a sour gas stream involves reducing H_2S in any concentration the sour gas should contain when produced, to a market standard for sweet gas, usually a maximum of 0.25 grains H_2S per 100 standard cubic feet of gas, or 0.00039 mol percent H_2S. For the purpose of determining an emission factor, it was assumed that essentially 100 percent of the H_2S present in processed sour gas is removed by the sweetening process.

Therefore, if the average mol percent H_2S present in the sweetening plant intake gas stream is known, then the SO_2 emissions from the plant are directly proportional to this H_2S value. Emissions can, thus, be calculated from the average H_2S mol percent in sweetening plant intake by use of an emission factor. This factor was derived mathematically and is shown in Table 2.

Table 2. EMISSIONS FACTORS FOR GAS SWEETENING PLANTS

Type of Process	SO_2 Emissions[a]	
	$lbs/10^6\ ft^3$	$Kg/10^3 m^3$
Amine with smokeless flare or incinerator	1685 S[b]	26.98 S[b]

[a] Emissions are proportional to the mol percent of Hydrogen Sulfide in gas sweetening plant intake.

[b] S is the H_2S content in mol percent, of the sour gas entering the gas sweetening plant. For example; if H_2S content is 2 percent, the emissions factor would be 1685 x 2 = 3370 $lbs/10^6\ ft^3$ gas sweetened. If H_2S mol percent is unknown and cannot be determined, then use AQCR average H_2S value from Table 9.2-2.

H_2S concentrations are also reported in grains/100 standard ft^3 and ppm. Conversion factors to mol percents are listed below:

.01 mol % H_2S = 6.264 grains H_2S/100 std ft^3 @ 60°F 29.92"Hg

1 grain/100 std ft^3 = 15.96 ppm (parts per million) of H_2S in natural gas.

Table 3. AVERAGE HYDROGEN SULFIDE CONCENTRATIONS IN NATURAL GAS BY AIR QUALITY CONTROL REGIONS

State	AQCR Name	AQCR Number	Average H_2S mol %
Alabama	Mobile-Pensacola-Panama City-Southern Mississippi (FL., MS.)	5	3.30
Arizona	Four Corners (CO., NM., UT.)	14	0.71
Arkansas	Monroe-El Dorado (LA.)	19	0.15
	Shreveport-Texarkana-Tyler (LA., OK., TX.)	22	0.55
California	Metropolitan Los Angeles	24	2.09
	San Joaquin Valley	31	0.89
	South Central Coast	32	3.66
	Southeast Desert	33	1.0
Colorado	Four Corners (AZ., NM., UT.)	14	0.71
	Metropolitan Denver	36	0.1
	Pawnee	37	0.49
	San Isabel	38	0.3
	Yampa	40	0.31
Florida	Mobile-Pensacola-Panama City-Southern Mississippi (AL., MS.)	5	3.30
Kansas	Northwest Kansas	97	0.005
	Southwest Kansas	100	0.02
Louisiana	Monroe-El Dorado (AR.)	19	0.15
	Shreveport-Texarkana-Tyler (AR., OK., TX.)	22	0.55
Michigan	Upper Michigan	126	0.5
Mississippi	Mississippi Delta	134	0.68
	Mobile-Pensacola-Panama City-Southern Mississippi (AL., FL.)	5	3.30
Montana	Great Falls	141	3.93
	Miles City	143	0.4
New Mexico	Four Corners (AZ., CO., UT.)	14	0.71
	Pecos-Permian Basin	155	0.83

Table 3 (continued). AVERAGE HYDROGEN SULFIDE CONCENTRATIONS IN NATURAL GAS BY AIR QUALITY CONTROL REGIONS

State	AQCR Name	AQCR Number	Average H_2S mol %
North Dakota	North Dakota	172	1.74[a]
Oklahoma	Northwestern Oklahoma	187	1.1
	Shreveport-Texarkana-Tyler (AR., LA., TX.)	22	0.55
	Southeastern Oklahoma	188	0.3
Texas	Abilene-Wichita Falls	210	0.055
	Amarillo-Lubbock	211	0.26
	Austin-Waco	212	0.57
	Corpus Christi-Victoria	214	0.59
	Metropolitan Dallas-Fort Worth	215	2.54
	Metropolitan San Antonio	217	1.41
	Midland-Odessa-San Angelo	218	0.63
	Shreveport-Texarkana-Tyler (AR., LA., OK.)	22	0.55
Utah	Four Corners (AZ., CO., NM.)	14	0.71
Wyoming	Casper	241	1.262
	Wyoming (except Park, Bighorn and Washakie Counties[b])	243	2.34

[a] Sour gas only reported for Burke, Williams and McKenzie Counties.
[b] Park, Bighorn and Washakie Counties report gas with an average 23 mol percent H_2S content.

The emission factor for SO_2 was developed as follows:

$$1 \text{ mol percent } H_2S = \frac{626.4 \text{ grains } H_2S}{100 \text{ ft}^3}$$

Molecular weight of hydrogen sulfide = 34

Molecular weight of sulfur dioxide = 64

7000 grains = 1 pound

$$1 \text{ mol \% } H_2S = \frac{6{,}264{,}000 \text{ grains } H_2S}{10^6 \text{ ft}^3} \times \frac{64}{34} \times \frac{1 \text{ lb.}}{7000 \text{ grains}} = 1685 \text{ lbs. } SO_2/10^6 \text{ ft}^3$$

Therefore, any mol percent value of H_2S in a gas sweetening plant intake stream times 1685 gives the number of pounds of SO_2 emitted per million cubic feet of gas sweetened.

For example: A sweetening plant operates from a gas field of similar wells. The average mol percent H_2S is 1.2, and the plant processes four million cubic feet per day of sour gas. To determine the plant emissions:

$$\overset{1.2}{\text{mol \% } H_2S} \times \overset{1685}{\text{lbs. } SO_2/10^6 \text{ ft}^3} = \overset{2022}{\text{lbs. } SO_2/10^6 \text{ ft}^3}$$

$$\frac{2022 \text{ lbs. } SO_2}{1 \times 10^6 \text{ ft}^3} \times \frac{4 \times 10^6 \text{ ft}^3}{1 \text{ day}} = 8088 \text{ lbs. } SO_2/\text{day}$$

Thus, the sweetening plant has a total daily emission of 8088 pounds of sulfur dioxide.

If the average mol percentage of H_2S in the plant intake is unknown, then the values in Table 3 may be used to roughly approximate plant emissions for plants located in certain geographic areas. This table was developed by researching state agency data, service company data, and available literature to determine H_2S values for sour gas fields. Data from the analysis of 13,558 gas samples were surveyed in order to determine the average H_2S concentrations for the 29 AQCRs represented in Table 3. Only 345 of the gas analyses were of sour gas, and these data are summarized in Appendix A and presented graphically in Figure 5. At first reading the values in Table 3 appear low. This is largely a factor of being an average figure for an entire AQCR where there will be wells producing both sweet and sour gas. When dealing with an individual gas sweetening plant, every effort should be made to learn the actual H_2S concentration in its intake gas before using the average value in Table 3.

This approach for development of the emission factor was utilized for several reasons. First, it was known that the SO_2 emissions were directly proportional to the H_2S concentration in the burned waste gases. Second, in order to use this relationship the volume of gas must be known as well as the H_2S concentration. Data on sales gas is usually available, but for many plants information on the amount of hydrogen sulfide in the incoming gas stream is not available. Therefore, a method of approximating H_2S concentrations in sweetening plant intake gas streams had to be devised. Since information on plant location is known, a method of relating geographic location to the emission factor was sought, and resulted in analysis of gas field H_2S concentration. Although the natural gas bearing geologic formations produced in different areas and at different depths have widely

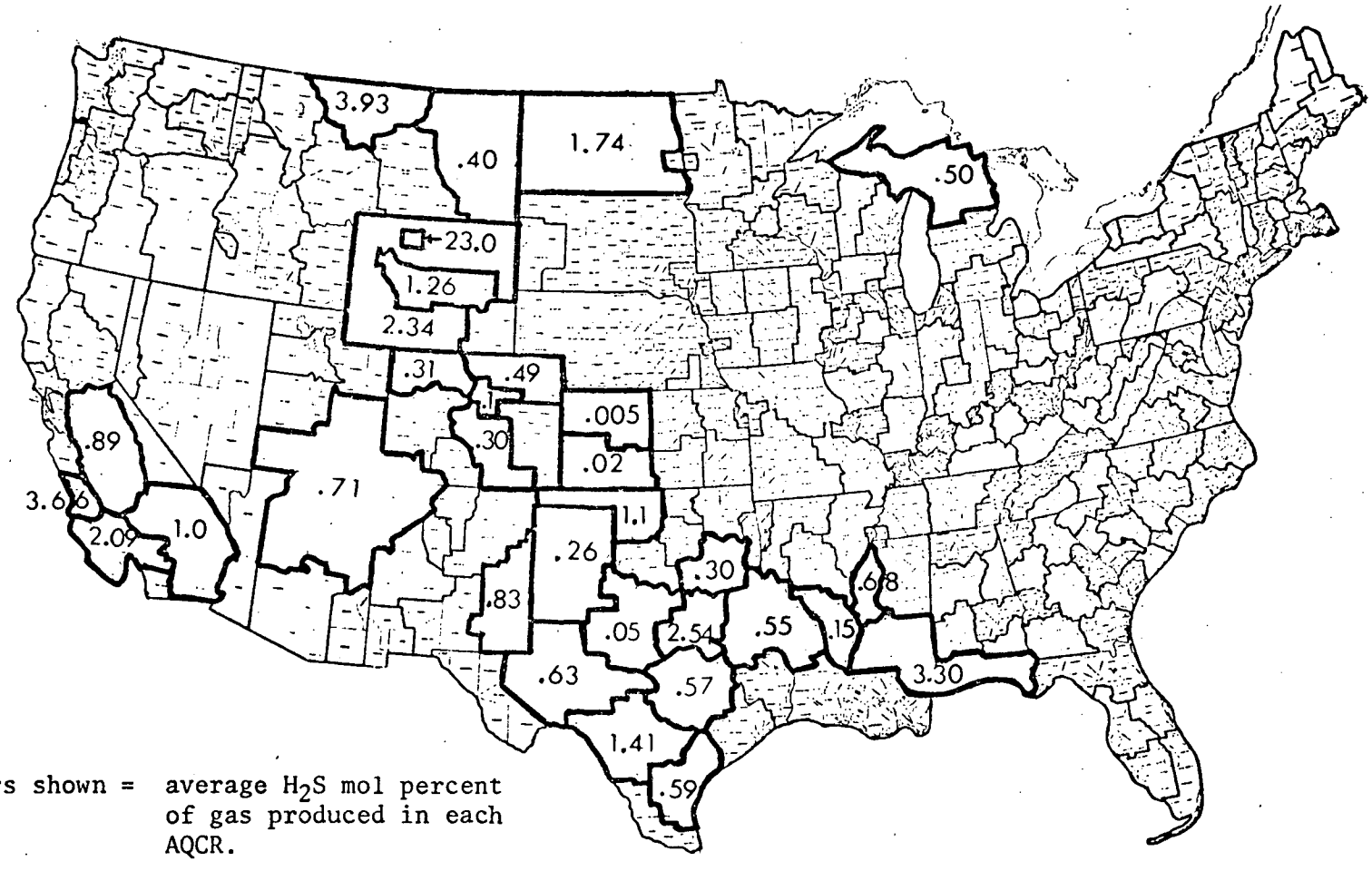

Numbers shown = average H_2S mol percent of gas produced in each AQCR.

Figure 5

Map of Air Quality Control Regions in sixteen states with sour gas resources

divergent H_2S values, in general, areas of sour gas production have reasonably consistent H_2S values. In other words, although the difference between the maximum H_2S concentration and the minimum H_2S concentration may be large, most samples fall close to the mean value. This indicates that in a large percentage of cases emission prediction accuracy will be good.

For example: A sweetening plant is located in West Texas in Ector County. The plant processes ten million cubic feet of gas daily.

Ector County is located in Air Quality Control Region 218. In Table 3 the average mol percent H_2S listed for AQCR 218 is 0.63. Therefore,

(0.63)	x	(1685)	x	(10)	=	10,615 lbs SO_2/day
mol % H_2S		SO_2 Emission Factor		Daily Plant Intake 10^6 ft^3		emitted

IV. SOURCE CLASSIFICATION CODES

The only emissions from gas sweetening plants are the acid gas streams. This acid gas may be vented, flared, incinerated, or used by an associated industry as a feedstock. Most sour gas fields usually have sulfur recovery plants associated with the gas sweetening plants. Such an associated industry serves two functions: (1) it serves as a control device by lowering emission of sulfur oxides to allowable levels and (2) it produces economic benefits from the sale of the recovered product. Some isolated fields or individual wells may have small sweetening process units, without an associated industry to utilize the produced acid gas stream. In these cases the acid gas is usually flared. Some large volume gas sweetening plants also operate without marketing their acid gas stream, but normally these plants are processing gas that is only slightly sour.

Acid gas emitted from sweetening plants is very corrosive and, therefore, it is rarely transported by pipeline. In some cases the rich amine solution from a sweetening plant may be piped for short distances to chemical manufacturers for commercial production. Therefore, associated industries, such as sulfur recovery plants or sulfuric acid plants, are usually constructed close by sweetening plants to utilize the acid gas supply. When this is the case, then the proper Chemical Manufacturing source classification code should be used to indicate the associated industry as the emission

source. This is necessary to demonstrate that the emissions resulting from a sulfur recovery plant operating on an acid gas supply from a sweetening plant should be attributed to the sulfur recovery plant and not the gas sweetening plant. The proper SCC will show the sweetening plant to have no emissions. Source Classification Codes already exist for the associated industries listed and emission estimates should be made according to the Source Classification Codes for the proper emission source. SCCs do not exist for gas processing as a process separate from gas sweetening, but it is not necessary to have an SCC for gas processing because there are no emissions from normal operations of gas processing facilities. Only amine process flares or incinerators should have emissions attributed to gas sweetening plants directly.

The Source Classification Codes and emission factors for natural gas sweetening are listed below:

Industrial Process-Natural Gas Industry **********	Pounds Emitted Per Unit Part.	SO_x	NO_x	HC	CO	Units
Gas Sweetening						
3-06-014-01 Amine process w/smokeless flare	Neg[c]	1685	Neg	Neg	Neg	MMCF Gas Processed
3-06-014-02 Amine process w/incinerator	Neg	1685	Neg	Neg	Neg	
3-06-014-03 Amine process w/Claus plant[a]	0	0	0	0	0	
3-06-014-04 Amine process w/H_2SO_4 plant[b]	0	0	0	0	0	
3-06-014-05 Amine process w/ well reinjection	0	0	0	0	0	
3-06-014-99 Other/not classified						

	Pounds Emitted Per Unit Part.	SO_x	NO_x	HC	CO	Units
[a] Sulfur (elemental)						
3-01-032-01 MOD-Claus 2Stage		280.				Tons product
3-01-032-02 MOD-Claus 3Stage		189.				Tons product
3-01-032-03 MOD-Claus 4Stage		146.				Tons product
3-01-032-99 Other/Not Clasifd.						Tons product
[b] Sulfuric acid						
1. H_2SO_4 - Chamber						
3-01-022-01 General				0.		Tons pure acid produced
2. H_2SO_4 - Contact						
3-01-023-01 99.7 Conversion	2.50	4.00				Tons " produced
3-01-023-04 99.5 Conversion	2.50	7.00				Tons " produced
3-01-023-06 99.0 Conversion	2.50	14.0				Tons " produced
3-01-023-08 98.0 Conversion	2.50	27.0				Tons " produced
3-01-023-10 97.0 Conversion	2.50	40.0				Tons " produced
3-01-023-12 96.0 Conversion	2.50	55.0				Tons " produced
3-01-023-14 95.0 Conversion	2.50	70.0				Tons " produced
3-01-023-16 94.0 Conversion	2.50	82.0				Tons " produced
3-01-023-18 93.0 Conversion	2.50	96.0				Tons " produced
3-01-023-99 Other/Not Clasifd.						Tons produced

[c] Negligible emission

V. LIST OF GAS PROCESSING PLANTS IN THE CONTIGUOUS UNITED STATES THAT HAVE SOUR GAS RESOURCES

The following table, Table 4, contains a comprehensive listing of natural gas plants in the sixteen states known to have significant sour gas resources. The table is intended to complement the entries in the National Emissions Data System (NEDS) by comments on how the plant is presently encoded in NEDS and on other information pertinent to emissions from the various plants.

Plant identification numbers are presented only for those plants presently in NEDS, as the authors did not assign new plant identification numbers for the plants not currently listed. Comments on Standard Industrial Classification codes represent the view of the authors that if a gas processing plant has an associated industry utilizing the emissions of the gas processing plant, then it should be coded either as the chemical manufacturing facility (2819) or dual coded. The authors hold this view because emissions from a sulfur recovery plant should be charged to SIC 2819 rather than from the gas processing plant (SIC 1311) which has a sulfur recovery unit adjacent to it. The table indicates that all plants presently coded with SIC 1321 should be recoded 1311.

Comments on SCCs are general because direct knowledge of which specific processes exist at each plant is not available to the authors. A citation

of incorrect SCCs is only made when the existing SCC is obviously wrong for the kind of facility described by the SIC, plant name and other SCCs for the facility.

Many publications and various groups and agencies were contacted in an attempt to compile an accurate listing. Not all of these contacts proved fruitful. Contacts by phone and mail with many of the state pollution control offices provided accurate information for those states. A visit to the Texas Air Control Board (TACB) in Austin yielded a great deal of data for Texas. Increased activity in the natural gas industry in the last two years is not reflected in this table. The data are believed current through 1973.

Table Explanation

N. D. - No Data

Sources

1 - Texas Air Control Board Data

2 - Mississippi Air Control Board Data

3 - Oil & Gas Journal

4 - Report to EPA "Sulfur Compound Emissions of the Petroleum Production Industry"

5 - Alabama Air Pollution Control Commission

6 - National Emission Data Systems

Comments

A - New plants to be coded 1311

B - These plants are coded either as gas processing (1311) or chemical manufacturing (2819) but should be coded 1311. Dual coding has sometimes occurred.

C - Recode as 1311

D - SIC correctly coded in NEDS

Table 4. LIST OF GAS PROCESSING PLANTS IN SIXTEEN STATES THAT HAVE SOUR GAS RESOURCES

State	AQCR	County	Company	Plant/ID	Source	Comments*	
AL	001	Choctaw	Placid Oil	Womack Hill	5	A	
		Washington	Phillips	Chatom	5	A	
	005	Escambia	Exxon	Flomaton	4	A	
		Escambia	Mallard Exp.	Canoe	5	A	
		Mobile	Cities Service Oil	Citronelle	3	A	
AZ	014	Apache	Kerr-McGee Corp.	Navaho	3	A	
AR	022	Columbia	Ark.-La. Gas Co.	Hamilton	3	B	Dual
		Lafayette	Austral Oil Co.	Lake Erling	3	B	Dual
		Lafayette	Phillips Petro.	McKamie	3	B	Dual
CA	024	Los Angeles	Getty Oil	Sesnon Frew	3	A	
		Los Angeles	Lomita Gas Co.	Harbor Plant	3	B	Dual
		Los Angeles	Lomita Gas Co.	Signal Hill	3	A	
		Los Angeles	Mobil Oil	Springs Plant	3	A	
		Los Angeles	Signal Oil & Gas	Inglewood Plant	3	A	
		Los Angeles	Standard Oil	Inglewood LTS	3	A	
		Los Angeles	Standard Oil	Torrance	3	A	
		Los Angeles	Sun Oil	Newhall	3	A	
		Los Angeles	Texaco	Honor Rancho	3	A	
		Los Angeles	Union Oil	Bell	3	A	
		Los Angeles	Union Oil	Del Valle	3	A	
		Los Angeles	Union Oil	Dominguez	3	A	
		Orange	Signal Oil & Gas	Huntington Beach	3	A	
		Orange	Standard Oil	Huntington Beach	3	A	
		Orange	Standard Oil	Murphy-Coyote LTS	3	A	
		Orange	Union Oil	Stearns	3	A	

* All SO_x emissions in short tons/year.

Table 4 (continued). LIST OF GAS PROCESSING PLANTS IN SIXTEEN STATES THAT HAVE SOUR GAS RESOURCES

State	AQCR	County	Company	Plant/ID	Source	Comments*
CA	024	Santa Barbara	Arco	--/44	6	A
						2-02-002-02
						3-06-001-04
						3-06-008-02
						3-06-008-04
						3-06-008-05
						4-03-001-02
		Santa Barbara	Arco	State Lease #308	3	A
		Santa Barbara	Getty Oil	Los Alamos	3	A
		Santa Barbara	Mobil Oil	Los Flores/30	6	A
						3-06-008-05
						4-03-001-02
		Santa Barbara	Phillips Petro.	Tajiguas/31	6	A
						2-02-002-02
						3-06-008-02
						3-06-008-03
						3-06-008-05
		Santa Barbara	Shell	Goleta/32	6	A
						3-06-008-03
						3-06-008-05
						3-06-001-04
						4-03-001-02
		Santa Barbara	Shell Oil	Molino/34	6,3	A
						4-03-001-02
						3-06-001-04
						2-02-002-02
						3-06-008-02
						3-06-008-03
						3-06-008-04
						3-06-008-05

Table 4 (continued). LIST OF GAS PROCESSING PLANTS IN SIXTEEN STATES THAT HAVE SOUR GAS RESOURCES

State	AQCR	County	Company	Plant/ID	Source	Comments*
CA	024	Santa Barbara	Standard Oil	Carpenteria/35	6,3	A 2-02-002-02 3-06-008-02 3-06-008-04 3-06-008-05 3-06-001-04 4-03-001-02
		Ventura	Arco	--/3	6	A 2-02-002-02
		Ventura	Arco	N. Sulfur Mtn./4	6	A 2-02-002-02 3-06-008-02 3-06-008-03 3-06-008-04 3-06-008-05 4-03-001-02 4-03-001-04
		Ventura	Arco	Ojai Timber Canyon	3	A
		Ventura	Chanslor-Western	W. Pac. Coast Hwy/5	6	A 2-02-002-02 3-06-008-02 3-06-008-03 3-06-008-04 3-06-008-05 4-01-999-99
		Ventura	Coline Gas	Coline Plant	3	A

Table 4 (continued). LIST OF GAS PROCESSING PLANTS IN SIXTEEN STATES THAT HAVE SOUR GAS RESOURCES

State	AQCR	County	Company	Plant/ID	Source	Comments*
CA	024	Ventura	Continental Oil	San Miguelito/8	6	A 2-02-002-02 3-06-008-02; -03; -04 4-03-001-02; -04
		Ventura	Getty	Crocker/68	6	A 3-06-008-03; -05 4-03-001-02; -04
		Ventura	Getty	Oxnard Plains	6	A 2-02-002-02 3-06-008-02 3-06-008-03; -04; -05 4-03-001-02; -04
		Ventura	Getty	School Canyon/18	6	A 3-06-008-02 3-06-008-03; -04; -05 4-03-001-02 4-03-001-04 4-03-999-99
		Ventura	Getty	S. Mtn./19	6	A 3-06-008-02; -03; -05 4-03-001-02; -04
		Ventura	Getty	Tapo/69	6	A 2-02-002-02 3-06-008-02; -03; -05 4-03-001-02; -04
		Ventura	Getty	Tapo-Simi/70	6	A 3-06-008-03; -05 4-03-001-02; -04
		Ventura	Getty	Temescal-Piru/67	6	A 3-06-008-02; -03; -05 4-03-001-02; -04

Table 4 (continued). LIST OF GAS PROCESSING PLANTS IN SIXTEEN STATES THAT HAVE SOUR GAS RESOURCES

State	AQCR	County	Company	Plant/ID	Source	Comments*
CA	024	Ventura	Getty	Ventura/20	6,3	A-SO_x - 6 3-06-008-02; -03; -04; -05 4-03-001-02; -04 2-02-002-02 3-06-001-04
		Ventura	Lloyd Corp.	Ventura/28	6	A 4-03-001-02; -04 2-02-999-97 3-06-008-02; -03; -04; -05
		Ventura	Mobil	Barnard-Nitten/71	6	A 2-02-999-97 3-06-001-02; -03; -04; -05
		Ventura	Mobil	Oxnard/75	6	A 4-03-001-02; -03; -04; -07 4-03-001-52
		Ventura	Mobil	Padre Canyon/31	6	A 2-02-002-02 3-06-001-02 3-06-008-02; -03; -04; -05 4-03-001-02; -04 4-03-999-99
		Ventura	Mobil	Rincon/30	6	A 3-06-008-03; -04; -05
		Ventura	Mobil	Rose Lease/73	6	A 3-06-008-02; -03; -04; -05
		Ventura	Mobil	Tomson Lease/74	6	A 3-06-008-03; -05

* All SO_x emissions in short tons/year.

Table 4 (continued). LIST OF GAS PROCESSING PLANTS IN SIXTEEN STATES THAT HAVE SOUR GAS RESOURCES

State	AQCR	County	Company	Plant/ID	Source	Comments*
CA	024	Ventura	Phillips Petro.	W. Pacific Coast/33	6	A 2-02-002-02 3-06-008-02; -03; -04; -05 3-06-009-01 3-06-001-02; -04 4-03-001-02; -04
		Ventura	Shell Oil	Ventura/43	6,3	A 3-06-008-02; -03; -04; -05 3-06-001-04 4-03-001-02; -04
		Ventura	Shell Oil	Ventura/44	6	A 3-06-008-02; -03; -04; -05 4-03-001-02; -04
		Ventura	Shell Oil	Ventura/45	6	A 3-06-001-04 2-02-002-02 3-06-008-02; -03; -04; -05 3-06-007-01
		Ventura	Standard	Fillmore/47	6	A 4-03-001-02; -04 4-04-001-99
		Ventura	Standard	Fillmore Oil Field/50	6	A 4-03-001-02 4-03-001-04
		Ventura	Standard	Oxnard/49	6	A 4-03-001-02; -04
		Ventura	Standard	W. Montalvo/48	6	A 4-03-001-02; -04 4-03-999-99

Table 4 (continued). LIST OF GAS PROCESSING PLANTS IN SIXTEEN STATES THAT HAVE SOUR GAS RESOURCES

State	AQCR	County	Company	Plant/ID	Source	Comments*
CA	024	Ventura	Texaco	Shiells Canyon/55	6,3	A 3-06-008-02; -03; -04; -05 4-03-001-02; -04
		Ventura	Texaco	S. Mtn. Field/53	6	A 4-03-001-02; -04 3-06-001-04
		Ventura	Union Oil	Bardsdale/60	6	A 3-06-008-02; -03; -04; -05 4-03-001-02;-04
		Ventura	Union Oil	Big Mountain/61	6	A 4-03-001-02; -04 2-02-002-02 3-06-001-04 3-06-008-03; -05
		Ventura	Union Oil	Broad Oaks/57	6	A 4-03-001-02; -04
		Ventura	Union Oil	Del Valle Absorption Plant/80	6	A 2-02-002-02 1-02-006-02 3-00-008-05 3-06-008-02; -03; -04 3-06-007-01
		Ventura	Union Oil	Oakridge Field/58	6	A 3-06-008-02; -03; -04; -05 4-03-001-02; -04
		Ventura	Union Oil	Santa Paula/56	6	A 3-06-008-03; -04; -05 4-03-001-02; -04 3-06-001-04

Table 4 (continued). LIST OF GAS PROCESSING PLANTS IN SIXTEEN STATES THAT HAVE SOUR GAS RESOURCES

State	AQCR	County	Company	Plant/ID	Source	Comments*
CA	024	Ventura	Union Oil	Simi/77	6	A 2-02-002-02 3-06-008-03; -05 4-03-001-02; -04
		Ventura	Union Oil	S. Tapo/79	6	A 4-03-001-02; -04 3-06-008-03; -05
		Ventura	Union Oil	West Mountain/81	6	A 3-06-008-03 3-06-008-05 4-03-001-02; -04 2-02-002-02 3-06-001-04
		Ventura	Union Oil	Ventura/82	6	A 4-03-002-03 3-06-008-03
		Ventura	Union Oil	Torrey Oil Field/59	6	A 3-06-008-02; -03; -04; -05 4-03-001-03; -04
		Ventura	Westates Petro.	Telegraph Rd./64	6	A 4-03-001-02; -04 4-03-999-99
	025	Monterey	Mobil Oil	San Ardo/19	6	A-SO_x - 3,220 1-02-006-01 1-02-999-98
		Monterey	Texaco	San Ardo/30	6	A-SO_x - 9160 1-02-006-01 1-02-999-98

Table 4 (continued). LIST OF GAS PROCESSING PLANTS IN SIXTEEN STATES THAT HAVE SOUR GAS RESOURCES

State	AQCR	County	Company	Plant/ID	Source	Comments*
CA	030	Contra Costa	Allied Chemical	--/17	6	B Recode Dual SO_x - 7200 3-01-032-01
	031	Fresno	Mobil	Helm/65	6	A 3-06-008-05 3-06-008-03 4-03-001-04 4-03-001-02
		Fresno	Sampson Resources	Burrel/51	6	C Recode 3-06-008-05 2-02-002-02 4-03-001-01
		Fresno	S. Pac. Pipeline	Fresno/50	6	A 4-03-001-52 4-03-001-07 4-03-002-01
		Fresno	Standard Oil	Three-P	3	A
		Fresno	Shell	Coalinga/64	6	A-SO_x - 405 3-06-008-05 3-06-001-03; -04 4-03-001-04; -02
		Fresno	Standard Oil	Fresno/69	6	A 3-06-008-05 3-06-008-04 3-06-008-03; -02
		Fresno	Standard Oil	Kettleman-Coalinga/70	6	A 3-06-007-01; 2-02-002-02 3-06-008-05; -04; -03; -02 3-06-001-04 4-03-001-04; -02

Table 4 (continued). LIST OF GAS PROCESSING PLANTS IN SIXTEEN STATES THAT HAVE SOUR GAS RESOURCES

State	AQCR	County	Company	Plant/ID	Source	Comments*
CA	031	Fresno	Texaco	Coalinga/63	6	A-SO_x - 77 3-06-001-03 4-03-001-04 4-03-001-02
		Fresno	Texaco	Raison City/66	6	A 3-06-008-05; -04 2-02-002-02 3-06-001-04 4-03-001-04 4-03-001-02
		Fresno	Union Oil	Coalinga Nose/68	6,3	A-SO_x - 3 2-02-002-02 3-06-001-04 4-03-001-04; -02
		Fresno	Union Oil	Guijarral Hills/74	6	A 3-06-008-05; -03 4-03-001-04; -02
		Fresno	Union Oil	Jacalitos Field/73	6	A 3-06-008-03 4-03-001-04; -02
		Kern	Arco	North Coles Levee	3	A
		Kern	Arco	Steam Inj. Boiler/201	6	A-SO_x - 161 1-02-004-02
		Kern	Arco	Steam Inj. Boiler/202	6	A-SO_x - 43 1-02-006-02 1-02-004-02
		Kern	Arco	Steam Inj. Boiler/203	6	A-SO_x - 69 1-02-004-02 1-02-006-02

Table 4 (continued). LIST OF GAS PROCESSING PLANTS IN SIXTEEN STATES THAT HAVE SOUR GAS RESOURCES

State	AQCR	County	Company	Plant/ID	Source	Comments*
CA	031	Kern	Arco	Stevens-Calidon	3	A
		Kern	Belridge Oil	McKittrick/204	6	A-SO_x - 287 1-02-004-02
		Kern	Belridge Oil	Belridge/205	6,3	A-SO_x - 102 1-02-004-02; -03
		Kern	Berry Holding	--/206	6	A 1-02-004-02 1-02-006-02
		Kern	Berry Holding	--/207	6	A 1-02-004-02
		Kern	Berry Holding	Steam Inj. Boiler/209	6	A 1-02-004-02
		Kern	Berry Holding	Taft/208	6	A 1-02-004-02
		Kern	Brogden Oil	McKittrick/210	6	A 1-02-004-02
		Kern	Chanslor-Western	Fellows/211	6	A-SO_x - 2884 1-02-004-02
		Kern	Chanslor-Western	--/212	6	A-SO_x - 670 1-02-004-02
		Kern	Chanslor-Western	--/213	6	A-SO_x - 201 1-02-004-02
		Kern	Chanslor-Western	--/214	6	A-SO_x - 201 1-02-004-02
		Kern	Chanslor-Western	--/215	6	A-SO_x - 223 1-02-004-02
		Kern	Chanslor-Western	--/216	6	A-SO_x - 223 1-02-004-02
		Kern	Chanslor-Western	Steam Inj. Boiler/217	6	A-SO_x - 420 1-02-004-02

Table 4 (continued). LIST OF GAS PROCESSING PLANTS IN SIXTEEN STATES THAT HAVE SOUR GAS RESOURCES

State	AQCR	County	Company	Plant/ID	Source	Comments*
CA	031	Kern	Chanslor-Western	Steam Inj. Boiler/218	6	A-SO_x - 603 1-02-004-02
		Kern	Chanslor-Western	Steam Inj. Boiler/219	6	A-SO_x - 402 1-02-004-02
		Kern	Chanslor-Western	Steam Inj. Boiler/220	6	A-SO_x - 76 1-02-004-02
		Kern	Chanslor-Western	Steam Inj. Boiler/221	6	A-SO_x-223 1-02-004-02
		Kern	Getty Oil	Buena Vista Hills	3	A
		Kern	Getty Oil	Cymric/13	6,3	A 2-02-002-02 3-06-008-02; -05; -04; -03 3-06-001-04
		Kern	Getty Oil	Kern Field/223	6	A-SO_x - 2962 1-02-004-02
		Kern	Getty Oil	Olig Pump St./322	6	A 1-02-006-02
		Kern	Getty Oil	Reed Field/222	6	A-SO_x - 1643 1-02-004-02
		Kern	Getty Oil	Templor Pump Sta./223	6	A-SO_x - 48 1-02-004-02
		Kern	Getty Oil	--/224	6	A-SO_x - 3329 1-02-004-02
		Kern	Getty Oil	--/225	6	A-SO_x - 1035 1-02-004-02
		Kern	Getty Oil	--/226	6	A-SO_x - 4360 1-02-004-02
		Kern	Getty Oil	--/227	6	A-SO_x - 190 1-02-004-02

Table 4 (continued). LIST OF GAS PROCESSING PLANTS IN SIXTEEN STATES THAT HAVE SOUR GAS RESOURCES

State	AQCR	County	Company	Plant/ID	Source	Comments*
CA	031	Kern	Getty Oil	--/228	6	A-SO_x - 3088 1-02-004-02
		Kern	Getty Oil	--/229	6	A-SO_x - 309 1-02-004-02
		Kern	Getty Oil	--/230	6	A-SO_x - 95 1-02-004-02
		Kern	Getty Oil	--/231	6	A-SO_x - 95 1-02-004-02
		Kern	Getty Oil	--/232	6	A-SO_x - 6774 1-02-004-02
		Kern	Getty Oil	--/233	6	A-SO_x - 3047 1-02-004-02
		Kern	Getty Oil	--/234	6	A-SO_x - 107 1-02-004-02
		Kern	Getty Oil	--/235	6	A-SO_x - 107 1-02-004-02
		Kern	Getty Oil	--/236	6	A-SO_x - 107 1-02-004-02
		Kern	Getty Oil	--/237	6	A-SO_x - 115 1-02-004-02
		Kern	Getty Oil	--/238	6	A-SO_x - 115 1-02-004-02
		Kern	Getty Oil	--/239	6	A-SO_x - 209 1-02-004-02
		Kern	Getty Oil	--/240	6	A-SO_x - 30 1-02-004-02
		Kern	Getty Oil	--/241	6	A-SO_x - 143 1-02-004-02
		Kern	Getty Oil	--/242	6	A-SO_x - 179 1-02-004-02

Table 4 (continued). LIST OF GAS PROCESSING PLANTS IN SIXTEEN STATES THAT HAVE SOUR GAS RESOURCES

State	AQCR	County	Company	Plant/ID	Source	Comments*	
CA	031	Kern	Getty Oil	--/243	6	A-SO_x - 190 1-02-004-02	
		Kern	Gulf Oil	Paloma	3	A	
		Kern	Marathon Oil	South Coles Levee	3	A	
		Kern	McCulloch Oil	Bakersfield/245	6	A-SO_x - 40 1-02-004-02; -03	
		Kern	McFarland Energy	--/255	6	A 0-00-000-00	Recode
		Kern	Mobil	Bakersfield/247	6	A-SO_x - 612 1-02-004-02	
		Kern	Mobil	Bakersfield/248	6	A-SO_x - 1266 1-02-004-02	
		Kern	Mobil	Bakersfield/319	6	A 3-06-001-04	
		Kern	Mobil	Steam Inj. Boiler/249	6	A-SO_x - 1497 1-02-004-02	
		Kern	Mobil	Steam Inj. Boiler/250	6	A-SO_x - 875 1-02-004-02	
		Kern	Mobil	Steam Inj. Boiler/251	6	A-SO_x - 593 1-02-004-02	
		Kern	Mobil	Steam Inj. Boiler/252	6	A-SO_x - 409 1-02-004-02	
		Kern	Mobil	Steam Inj. Boiler/253	6	A-SO_x - 220 1-02-004-02	
		Kern	Mobil	Steam Inj. Boiler/254	6	A-SO_x - 168 1-02-004-02	
		Kern	North Kern Front Enterprises	Steam Inj. Boiler/323	6	A-SO_x - 137 1-02-004-02	
		Kern	Occidental Petro.	Steam Inj. Boiler/244	6	A 1-02-004-02	

Table 4 (continued). LIST OF GAS PROCESSING PLANTS IN SIXTEEN STATES THAT HAVE SOUR GAS RESOURCES

State	AQCR	County	Company	Plant/ID	Source	Comments*
CA	031	Kern	Reserve Oil & Gas	Reserve Standard	3	A
		Kern	Shell Oil	Bakersfield Pump Sta./318	6	A-SO_x - 48 3-06-001-02 1-02-004-02
		Kern	Shell Oil	Mid Pump Sta./315	6	A-SO_x - 48 1-02-004-02
		Kern	Shell Oil	Petrol Rd/313	6	A-SO_x - 48 1-02-004-02 1-02-006-02; -03; -04
		Kern	Shell Oil	Ten Section	3	A
		Kern	Shell Oil	Wasco/314	6	A-SO_x - 48 1-02-004-02
		Kern	Signal Oil & Gas	Maricopa	3	A
		Kern	Standard Oil	Bitterwater Pump Sta./310	6	A 1-02-004-03
		Kern	Standard Oil	Kern Pump Sta./309	6	A 1-02-004-03 1-02-006-03
		Kern	Standard Oil	Lokern Pump Sta./311	6	A 1-02-006-03 1-02-004-03
		Kern	Standard Oil	Lost Hills	3	A
		Kern	Standard Oil	McKittrick	3	A
		Kern	Standard Oil	Oildale/260	6	A-SO_x - 170 1-02-004-02
		Kern	Standard Oil	Oildale/261	6	A-SO_x - 340 1-02-004-02

Table 4 (continued). LIST OF GAS PROCESSING PLANTS IN SIXTEEN STATES THAT HAVE SOUR GAS RESOURCES

State	AQCR	County	Company	Plant/ID	Source	Comments*
CA	031	Kern	Standard Oil	Oildale/262	6	A-SO_x - 170 1-02-004-02
		Kern	Standard Oil	Oildale/263	6	A-SO_x - 170 1-02-004-02
		Kern	Standard Oil	Oildale/264	6	A-SO_x - 170 1-02-006-02 1-02-004-02
		Kern	Standard Oil	Oildale/265	6	A-SO_x - 340 1-02-006-02 1-02-004-02
		Kern	Standard Oil	Oildale/266	6	A-SO_x - 170 1-02-006-02
		Kern	Standard Oil	Oildale/267	6	A-SO_x - 170 1-02-006-02 1-02-004-02
		Kern	Standard Oil	Oildale/268	6	A-SO_x - 340 1-02-004-02 1-02-006-02
		Kern	Standard Oil	One-C	3	A
		Kern	Standard Oil	Rio Bravo Pump Sta./312	6	A 1-02-004-03 1-02-006-03
		Kern	Standard Oil	Thirty-two Z	3	A
		Kern	Standard Oil	--/257	6	A-SO_x - 136 1-02-006-02 1-02-004-02
		Kern	Standard Oil	--/258	6	A-SO_x - 952 1-02-004-02 1-02-006-02

Table 4 (continued). LIST OF GAS PROCESSING PLANTS IN SIXTEEN STATES THAT HAVE SOUR GAS RESOURCES

State	AQCR	County	Company	Plant/ID	Source	Comments*
CA	031	Kern	Standard Oil	--/259	6	A-SO_x - 262 1-02-004-02 1-02-006-02
		Kern	Sun Oil	Newhall/269	6	A 1-02-004-02
		Kern	Sun Oil	Newhall/271	6	A 1-02-004-02
		Kern	Superior Oil	Rio Bravo	3	A
		Kern	Tenneco	Bakersfield/279	6	A-SO_x - 103 1-02-004-02
		Kern	Tenneco	Bakersfield/280	6	A-SO_x - 307 1-02-004-02
		Kern	Tenneco	Bakersfield/281	6	A-SO_x - 154 1-02-004-02
		Kern	Tenneco	Bakersfield/282	6	A-SO_x - 1475 1-02-004-02
		Kern	Tenneco	Bakersfield/283	6	A-SO_x - 1390 1-02-004-02
		Kern	Tenneco	Bakersfield/284	6	A-SO_x - 957 1-02-004-02
		Kern	Tenneco	Bakersfield/285	6	A-SO_x - 31 1-02-004-02
		Kern	Tenneco	Bakersfield/286	6	A-SO_x - 487 1-02-004-02
		Kern	Tenneco	Bakersfield/287	6	A-SO_x - 784 1-02-004-02
		Kern	Tenneco	Bakersfield/288	6	A-SO_x - 180 1-02-004-02
		Kern	Tenneco	Bakersfield/289	6	A-SO_x - 81 1-02-004-02

Table 4 (continued). LIST OF GAS PROCESSING PLANTS IN SIXTEEN STATES THAT HAVE SOUR GAS RESOURCES

State	AQCR	County	Company	Plant/ID	Source	Comments*
CA	031	Kern	Texaco	Bakersfield/293	6	A 1-02-004-02
		Kern	Texaco	Bakersfield/294	6	A 1-02-004-02
		Kern	Texaco	Bakersfield/295	6	A 1-02-004-02
		Kern	Texaco	Bakersfield/296	6	A 1-02-004-02
		Kern	Texaco	Bakersfield/297	6	A 1-02-004-02
		Kern	Texaco	Bakersfield/298	6	A 1-02-004-02
		Kern	Texfel Petro.	--/291	6	A-SO_x - 41 1-02-004-02
		Kern	Union Oil	Antelope Pump Sta./307	6	A 3-06-001-03
		Kern	Union Oil	Bakersfield/299	6	A 1-02-004-02
		Kern	Union Oil	Bakersfield/300	6	A-SO_x - 120 1-02-004-02
		Kern	Union Oil	Bakersfield/301	6	A-SO_x - 138 1-02-004-02
		Kern	Union Oil	Junction Pump Sta./306	6	A 3-06-001-03
		Kern	Union Oil	Middlewater Pump Sta/308	6	A 3-06-001-01
		Kern	Victory Oil	McKitrick/302	6	A 1-02-004-02 3-06-001-03

Table 4 (continued). LIST OF GAS PROCESSING PLANTS IN SIXTEEN STATES THAT HAVE SOUR GAS RESOURCES

State	AQCR	County	Company	Plant/ID	Source	Comments*
CA	031	Kern	Victory Oil	McKitrick/303	6	A 1-02-004-02 3-06-001-03
		Kern	Victory Oil	McKitrick/304	6	A 1-02-004-02
		Kern	Victory Oil	McKitrick/305	6	A 1-02-004-02
		Kern	Westates Petro.	Bakersfield/290	6	A 1-02-004-02
		Kern	M. H. Whittier	Fellows/272	6	A 1-02-004-02
		Kern	M. H. Whittier	Fellows/273	6	A 1-02-004-02
		Kern	M. H. Whittier	Fellows/274	6	A 1-02-004-02
		Kern	M. H. Whittier	Fellows/275	6	A 1-02-004-02
		Kern	M. H. Whittier	Fellows/276	6	A 1-02-004-02
		Kern	M. H. Whittier	Fellows/277	6	A 1-02-004-02
		Kern	M. H. Whittier	Fellows/278	6	A 1-02-004-02
	032	Santa Barbara	Arco	--/45	6	A 2-02-002-02 3-06-008-02 3-06-008-04; -05 3-06-001-04 4-03-001-02

Table 4 (continued). LIST OF GAS PROCESSING PLANTS IN SIXTEEN STATES THAT HAVE SOUR GAS RESOURCES

State	AQCR	County	Company	Plant/ID	Source	Comments*
CA	032	Santa Barbara	Arco	Cayama Valley/43	6	A 4-03-001-02 4-03-001-04 3-06-008-05
		Santa Barbara	Getty Oil	Canyon Field	6	A-SO_x - 16 3-06-001-04 3-06-008-05 2-02-002-02 4-03-001-02; -04
		Santa Barbara	Getty Oil	Zaca Field/29	6	A-SO_x - 8 3-06-001-04 4-03-001-02 3-06-008-05
		Santa Barbara	Shell	Santa Barbara/33	6	A 3-06-008-02; -03; -04; -05 3-06-001-04 4-03-001-02
		Santa Barbara	Texaco	E. Cat Canyon/36	6	A 3-06-001-04 3-06-008-03; -04; -05 4-03-001-02
		Santa Barbara	Union Oil	Casmalia/41	6	A 2-02-002-02 2-02-004-01 3-06-008-03; -04; -05 3-06-001-04 4-03-001-02

Table 4 (continued). LIST OF GAS PROCESSING PLANTS IN SIXTEEN STATES THAT HAVE SOUR GAS RESOURCES

State	AQCR	County	Company	Plant/ID	Source	Comments*
CA	032	Santa Barbara	Union Oil	Cat Canyon/38	6	A 2-02-002-02 2-02-004-01 3-06-008-03; -04; -05 4-03-001-02 3-06-001-04
		Santa Barbara	Union Oil	Lompoc Field/39	6	A 2-02-002-02 3-06-008-03 3-06-008-04; -05
		Santa Barbara	Union Oil	Orcutt Station/40	6	A 4-03-001-02 3-06-008-03
		Santa Barbara	Union Oil	Santa Maria/42	6,3	A 2-02-002-02 2-02-004-01 3-06-008-03; -04; -05 3-06-001-04 4-03-001-02
CO	014	La Plata	Northwest Pipeline	Ignacio	3	A
	035	Mesa	Continental Oil	Fruita	3	A
	036	Adams	Amoco Production	Third Creek	3	A
		Adams	Koch Oil	Third Creek	3	A
		Adams	Vessels Gas Proc.	Bennett	3	A
		Adams	Vessels Gas Proc.	Irondale	3	A
		Arapahoe	Amoco Production	Peoria	3	A
	037	Logan	Excelsion Oil	Yenter	3	A
		Morgan	Union Oil	Adena	3	A

Table 4 (continued). LIST OF GAS PROCESSING PLANTS IN SIXTEEN STATES THAT HAVE SOUR GAS RESOURCES

State	AQCR	County	Company	Plant/ID	Source	Comments*	
CO	037	Morgan	Vallery Corp.	Vallery	3	A	
		Morgan	Vessels Gas Proc.	Round Up	3	A	
		Weld	Amoco Production	Spindle	3	A	
	040	Rio Blanco	Chevron Oil	Rangeley Hagood	3	A	
		Rio Blanco	Matrix Land	Piceance Creek	3	A	
		Rio Blanco	Sun Oil	Dragon Trail	3	A	
		Rio Blanco	Texaco	Wilson Creek	3	A	
FL	049	Bradford	Florida Hydrocarbons	Bradford	3	A	
KS	096	Ellsworth	Northern Gas Products	--	3	A	
		Ellsworth	Northern Helex	--	3	A	
	097	Rush	Kansas Refined Helium	Otis	3	A	
	099	Harper	Cities Service Oil	Spivey Gas/17	6	C 1-02-006-02 2-02-002-02 2-02-002-01 5-03-005-99	Recode
		Harvey	Peoples Natural Gas	Burrton	3	A	
		Kingman	Cities Service Oil	Cheney	3	A	
		Kingman	Cities Service Oil	Midway	3	A	
		Reno	Cities Service Oil	Hutchinson	3	A	
		Sedgwick	Cities Service Oil	Wichita	3	A	
	100	Barber	Skelly Oil	Medicine Lodge	3	A	
		Ford	Skelly Oil	Minneola	3	A	

Table 4 (continued). LIST OF GAS PROCESSING PLANTS IN SIXTEEN STATES THAT HAVE SOUR GAS RESOURCES

State	AQCR	County	Company	Plant/ID	Source	Comments*	
KS	100	Grant	Amoco Production	Ulysses Gas/3	6	C 2-02-002-02 1-02-006-02 3-06-001-04 2-01-999-97	Recode
		Grant	Cities Service Oil	Jayhawk	3	A	
		Grant	Mesa Petroleum	Mesa Ulysses	3	A	
		Grant	Mobil Oil	Hickok Gas	6	C 2-02-002-02 2-01-999-97 1-02-006-03 1-02-006-02	Recode
		Kearney	Colo. Interstate Gas	Lakin	3	A	
		Morton	Alamo Chemical	Elkhart/1	6	C 5-03-001-01 1-02-006-02 2-02-002-02 3-01-999-99	Recode
		Morton	Anadarko Prod.	Interstate	3	A	
		Morton	Cities Service	Wilburton	3	A	
		Morton	Colo. Interstate Gas	Morton County	3	A	
		Pratt	Kathol Natural Gas	Rattlesnake Creek	3	A	
		Seward	Anadarko Prod.	Woods	3	A	
		Seward	National Helium	NH	3	A	
		Seward	Anadarko Prod.	Cimarron	3	A	
		Seward	Northern Natural Gas	Holcomb	3	A	
		Scott	Cities Service	Sunflower	3	A	
		Stanton	Peoples Natural Gas	Johnson	3	A	

Table 4 (continued). LIST OF GAS PROCESSING PLANTS IN SIXTEEN STATES THAT HAVE SOUR GAS RESOURCES

State	AQCR	County	Company	Plant/ID	Source	Comments*
LA	019	Ouachita	Ark-La Gas	Calhoun	3	A
		Morehouse	Miss. River Transmission	Kenmore	3	A
		Richland	Sun Oil	Delhi	3	A
		Tensas	Horner & Smith	Locust Ridge	3	A
	022	Bossier	Amoco	Sentell	3	A
		Bossier	Ark-La Gas	Sligo	3	A
		Bossier	Sun Oil	S. Sarepta	3	A
		Bossier	Union Tx. Petro.	Sligo	3	A
		Caddo	United Gas Pipeline	Greenwood	3	A
		Claiborne	Tenneco Oil	Stephens	3	A
		Claiborne	Claiborne Gas	Claiborne	3	A
		Lincoln	Ark-La Gas	North Ruston	3	A
		Lincoln	Chevron Oil	Hico Knowles	3	A
		Lincoln	Kerr-McGee	Dubach	3	A
		Nachitoches	Placid Oil	Black Lake	3	A
		Webster	Amoco Prod.	Minden	3	A
		Webster	Ark-La Gas	Bistineau	3	A
		Webster	Ark-La Gas	Minden	3	A
		Webster	Beacon Gas	--	3	A
		Webster	Cotton Valley Operators Comm.	CVOC	3	A
	106	Allen	Hunt Petro.	Kinder	3	A
		Acadia	Cities Service	Crowley	3	A
		Acadia	Continental Oil	Acadia	3	A
		Acadia	LaGloria Oil & Gas	Rayne	3	A
		Acadia	Shell Oil	Mermentau	3	A
		Acadia	Union Tx. Petro.	Eunice	3	A
		Acadia	Union Tx. Petro.	Rayne	3	A

Table 4 (continued). LIST OF GAS PROCESSING PLANTS IN SIXTEEN STATES THAT HAVE SOUR GAS RESOURCES

State	AQCR	County	Company	Plant/ID	Source	Comments*	
LA	106	Ascension	Mobil	Riverside	3	A	
		Ascension	Shell	Tebone	3	A	
		Ascension	Uniroyal Chemical	Geismar/12	6	B-SO_x - 93 3-01-032-99	Dual
		Assumption	Liquid Products Recovery	Napoleonville #1	3	A	
		Assumption	Liquid Products Recovery	Napoleonville #2	3	A	
		Assumption	Wanda Petro.	Napoleonville	3	A	
		Beauregard	Sohio Petro.	South Fields	3	A	
		Calcasieu	Amoco	South Manchester	3	A	
		Calcasieu	Cities Service	Lake Charles	3	A	
		Calcasieu	Continental Oil	Gillis	3	A	
		Calcasieu	Koch Oil	Manchester	3	A	
		Calcasieu	Sohio Petro.	Holmwood	3	A	
		Cameron	Amoco Prod.	Big Lake	3	A	
		Cameron	Amoco Prod.	South Pecan Lake	3	A	
		Cameron	Austral Oil	Holly Beach	3	A	
		Cameron	Chevron	West Cameron	3	A	
		Cameron	Continental Oil	Grand Chenier	3	A	
		Cameron	Crystal Oil	Kings Bayou & Hog Bayou	3	A	
		Cameron	Liquid Prod. Recovery	S. Grand Chenier	3	A	
		Cameron	Mobil Oil	Cameron	3	A	
		Cameron	Shell Oil	Black Bayou #1	3	A	
		Cameron	Shell Oil	Black Bayou #2	3	A	
		Cameron	Shell Oil	Chalkey	3	A	
		Cameron	Shell Oil	Kings Bayou	3	A	
		Cameron	Skelly Oil	Cameron	3	A	
		Cameron	Sohio Petro.	Grand Chenier	3	A	

Table 4 (continued). LIST OF GAS PROCESSING PLANTS IN SIXTEEN STATES THAT HAVE SOUR GAS RESOURCES

State	AQCR	County	Company	Plant/ID	Source	Comments*
LA	106	Cameron	Superior Oil	Lowry	3	A
		Cameron	Warren Petro.	Johnson Bayou	3	A
		East Baton Rouge	Mullins & Prichard	Bartville	3	A
		Evangeline	S. La. Production	Cocodrie	3	A
		Evangeline	S. La. Production	St. Landry	3	A
		Iberia	Exxon	Avery Island	3	A
		Iberia	Koch Oil	Bayou Postillion	3	A
		Iberia	Shell Oil	Weeks Island	3	A
		Iberville	Shell Oil	Bayou	3	A
		Jefferson	Exxon	Grand Isle	3	A
		Jefferson	Texaco	Lafitte	3	A
		Jefferson Davis	Amoco	South Jennings	3	A
		Jefferson Davis	Amoco	S. Thornwell	3	A
		Jefferson Davis	Phillips Petro.	Rollover	3	A
		Jefferson Davis	Shell Oil	Iowa	3	A
		Jefferson Davis	Texaco	South Lake Arthur	3	A
		Lafayette	Sun Oil	Maurice	3	A
		Lafourche	Amoco Production	Lake Boeuf	3	A
		Lafourche	Exxon	Thibodaux	3	A
		Lafourche	Liquid Prod. Rec.	Bourg	3	A
		Plaquemines	Chevron	Romere Pass	3	A
		Plaquemines	Exxon	Delta	3	A
		Plaquemines	Getty Oil	Bastian Bay	3	A
		Plaquemines	Getty Oil	Venice	3	A

Table 4 (continued). LIST OF GAS PROCESSING PLANTS IN SIXTEEN STATES THAT HAVE SOUR GAS RESOURCES

State	AQCR	County	Company	Plant/ID	Source	Comments*
LA	106	Plaquemines	Getty	West Bastian Bay	3	A
		Plaquemines	Gulf Oil	SE Bastian Bay	3	A
		Plaquemines	Gulf Oil	Venice	3	A
		Plaquemines	Texaco	Venice	3	A
		Pointe Coupee	Anchor Gasoline	Krotz Springs	3	A
		Pointe Coupee	Sun Oil	Fordoche	3	A
		Pointe Coupee	Texaco	Fordoche	3	A
		Rapides	Cities Service	Big Island	3	A
		St. Bernard	Shell Oil	Toca	3	A
		St. Bernard	Shell Oil	Yscloskey	3	A
		St. Bernard	Southern Natural Gas	Toca	3	A
		St. Bernard	Union Tx. Petro.	Toca	3	A
		St. Charles	Shell Oil	Norco	3	A
		St. Charles	Texaco	Paradis	3	A
		St. James	Cities Service	St. Amelia	3	A
		St. James	Exxon	College Point	3	A
		St. James	Liquid Prod. Recovery	Vacherie	3	A
		St. James	Mid-La. Gas	Kenmore	3	A
		St. James	Shell Oil	LaPice	3	A
		St. Landry	Exxon	Opelousas	3	A
		St. Landry	Getty	Opelousas	3	A
		St. Landry	Gulf Oil	Krotz Springs	3	A
		St. Landry	Mobil	Opelousas	3	A
		St. Landry	Sohio	Washington	3	A
		St. Martin	Exxon	Duck Lake	3	A
		St. Martin	Kerr-McGee	Bayou Crook Chene	3	A
		St. Mary	Exxon	Garden City	3	A
		St. Martin	Shell Oil	West Lake Verret	3	A

Table 4 (continued). LIST OF GAS PROCESSING PLANTS IN SIXTEEN STATES THAT HAVE SOUR GAS RESOURCES

State	AQCR	County	Company	Plant/ID	Source	Comments*
LA	106	St. Martin	Southeastern Public Service	South Section	3	A
		St. Martin	Wanda Petro.	Breaux Bridge	3	A
		St. Martin	Wanda Petro.	Cypress	3	A
		St. Mary	Arco	Bayou Sale	3	A
		St. Mary	Placid Oil	Patterson	3	A
		St. Mary	Shell	Calumet	3	A
		St. Mary	Sun Oil	Bayou Sale	3	A
		St. Mary	Sun Oil	Belle Isle	3	A
		St. Mary	Texaco	Floodway	3	A
		St. Mary	Wanda Petro.	Eugene Isle	3	A
		Terrebonne	Exxon	Lirette	3	A
		Terrebonne	Exxon	Lirette - 2	3	A
		Terrebonne	Getty	Hollywood	3	A
		Terrebonne	La. Land & Exploration	Pointe aux Chene	3	A
		Terrebonne	Placid Oil	Lapeyrouse	3	A
		Terrebonne	Superior Oil	Bayou Penchant	3	A
		Terrebonne	Superior Oil	Four Isle Dome	3	A
		Terrebonne	Shell	N. Terrebonne	3	A
		Terrebonne	Shell	Timbalier Bay	3	A
		Terrebonne	Union Oil	Houma	3	A
		Vermilion	Amoco	TSMA	3	A
		Vermilion	Mobil	Cow Island	3	A
		Vermilion	Phillips Petro.	Vermilion	3	A
		Vermilion	Superior Oil	Gueydan	3	A
		Vermilion	Texaco	Henry	3	A
		Vermilion	Texaco	Sea Robin	3	A

Table 4 (continued). LIST OF GAS PROCESSING PLANTS IN SIXTEEN STATES THAT HAVE SOUR GAS RESOURCES

State	AQCR	County	Company	Plant/ID	Source	Comments*	
MI	122	Osceola	Mich-Wis. Pipeline	Loreed	3	A	
	125	Hillsdale	Marathon Oil	Scipio	3	A	
		Ingham	Mobil Oil	Aureliun	3	A	
	126	Crawford	Dow Chemical	Dow	3	A	
MS	005	Adams	Sun Oil	Mercer	3	A	
		Clarke	Continental Oil	Pachuta Creek	2,4	A-SO_x - 8	
		Clarke	Continental Oil	West Nancy	2,4	A-SO_x - 240	
		Clarke	Getty Oil	East Nancy	2,4	A-SO_x - 0.43	
		Clarke	Getty Oil	West Nancy	2,4	A-SO_x - 4	
		Clarke	Shell Oil	Goodwater	2,3,4	B-SO_x - 1000	Dual
		Clarke	Tx. Oil & Gas	Harmony	2,4	A	
		Clarke	Tonkawa Gas Processing	Paulding/31	6	C 2-02-002-02 3-06-001-02	Recode
		Jasper	Skelly Oil	Bay Springs/13	6	C 1-02-006-03 2-02-002-02	Recode
		Marion	Exxon	Hub	3	A	
		Marion	Exxon	Sandy Hook	3	A	
		Pike	Sun Oil	McComb/33	6	C 2-02-002-02 3-06-001-02	Recode
		Rankin	Shell Oil	Thomasville	2,3,4	B-SO_x - 49	Dual
		Smith	Shell Oil	Tallahala	2,3,4	B-SO_x - 444	Dual
		Wayne	Amerada-Hess	Cypress Creek	2,4	A	
		Wayne	Amerada-Hess	Quitman	2,4	A	
		Wayne	Mobil	S. Cypress Field	2,4	A-SOx - 587	
	ND	ND	Amoco Oil	Prairie Branch	2	A-SO_x - 234	
		ND	Amoco Production	Lake Utopia	2	A-SO_x - 149	

Table 4 (continued). LIST OF GAS PROCESSING PLANTS IN SIXTEEN STATES THAT HAVE SOUR GAS RESOURCES

State	AQCR	County	Company	Plant/ID	Source	Comments*	
MS	ND	ND	Arco	Pachuta Creek Field	2	A-SO_x - 17	
		ND	Getty Oil	E. Paulding Field	2	A-SO_x - 38	
		ND	Getty Oil	Vossburg	2,4	A-SO_x - 0.3	
		ND	Getty Oil	W. Paulding Field	2	A-SO_x - 1	
		ND	Hess Pipeline	Eucutta Station A	2	A-SO_x - 496	
		ND	Hess Pipeline	Eucutta Station B	2	A-SO_x - 1094	
		ND	Hess Pipeline	Hiwannee Storage	2	A	
		ND	Shell	Pachuta Creek	2	A-SO_x - 88	
		ND	Shell	Stafford Springs Field	2	A-SO_x - 14	
		ND	Shell	W. Pachuta	2	A-SO_x - 3	
		ND	Texaco	W. Pachuta Creek	2	A-SO_x - 0.4	
		ND	Amoco Production	N. Nancy Field	2	A-SO_x - 1106	
MT	140	Yellowstone	Montana Sulfur & Chemical	Billings/14	6	B-SO_x - 82 3-01-999-99	Dual
	141	Glacier	Thunderbird Resources	Westco Refining	3	A	
	143	Fallon	Union Tx. Petro.	Glendive	3	A	
		Richland	McCulloch Gas	Fairview	3	A	
		Roosevelt	McCulloch Coas. Proc.	Tule	3	A	
NM	014	Rio Arriba	El Paso Nat. Gas	Lindrith Sta./3	6	A 2-02-002-02 3-06-001-04	
		Rio Arriba	Southern Union Prod.	Lybrook	3	A	
		San Juan	Arco	Four Corners/4	6	A 4-03-001-02; -04	

Table 4 (continued). LIST OF GAS PROCESSING PLANTS IN SIXTEEN STATES THAT HAVE SOUR GAS RESOURCES

State	AQCR	County	Company	Plant/ID	Source	Comments*	
NM	014	San Juan	El Paso Nat. Gas	Blanco Station/8	6	C 4-03-001-02; -03; -04 1-02-007-02 2-02-002-02 2-02-999-97 3-06-001-04 4-90-999-99	Recode
		San Juan	El Paso Nat. Gas	Chaco Station/9	6	C 4-03-001-03 1-02-007-02 2-02-002-02 3-06-001-04 2-02-999-97 3-06-999-99	Recode
		San Juan	El Paso Nat. Gas	Chaco Station/14	6	C 2-02-002-02	Recode
		San Juan	El Paso Nat. Gas	Kutz Station/16	6	C 2-02-002-02	Recode
		San Juan	El Paso Nat. Gas	San Juan River Sta./10	6	C-SO_x - 6304 4-03-001-01; -03 1-02-007-01 2-02-002-02 3-06-009-01; -99	Recode
		San Juan	El Paso Nat. Gas	San Juan Sta./17	6	C 2-02-002-02; -01	Recode
		San Juan	El Paso Nat. Gas	Station No. 3B-1/15	6	C 2-02-002-02	Recode
		San Juan	Southern Union Products	Kutz Gasoline/26	6	C 2-02-002-02 3-06-001-04	Recode

Table 4 (continued). LIST OF GAS PROCESSING PLANTS IN SIXTEEN STATES THAT HAVE SOUR GAS RESOURCES

State	AQCR	County	Company	Plant/ID	Source	Comments*	
NM	155	Chaves	Cities Service	Cato/2	6	A 2-02-002-02	
		Eddy	Amoco Production	Empire Abo	3,4	B	Dual
		Eddy	Amoco Production	Hobbs/2	6	C-SO_x - 1200 1-02-006-03 2-02-002-02 3-01-032-02 4-03-001-01 4-03-001-03	Recode
		Eddy	El Paso Nat. Gas	Wingate	3	A	
		Eddy	Marathon Oil	Indian Basin	3,4	B	Dual
		Eddy	Marathon Oil	Midland/8	6	C-SO_x - 128 3-01-032-01 2-02-002-02; -01 4-03-001-01; -03	Recode
		Eddy	Phillips Petro.	Artesia/11	6	C-SO_x- 13430 2-02-002-02 1-02-006-02 3-06-001-02 3-06-009-01 3-01-900-99 3-01-090-99 4-03-001-01	Recode
		Eddy	Southern Union Gas	Avalon	3	A	
		Eddy	Southern Union Gas	Indian Hills/6	6	A-SO_x - 590 4-03-001-01; -03 3-06-001-04 2-02-002-02 3-06-009-99	

Table 4 (continued). LIST OF GAS PROCESSING PLANTS IN SIXTEEN STATES THAT HAVE SOUR GAS RESOURCES

State	AQCR	County	Company	Plant/ID	Source	Comments*	
NM	155	Lea	Arco	Pecos-Permian Basin	6	A 4-03-001-02; -04 4-03-002-03; -04	
		Lea	Climax Chemical	Monument/3	6	B-SO_x - 720 3-01-032-01	Dual
		Lea	Continental Oil	Maljamar	3,4	B	Dual
		Lea	El Paso Natural Gas	Eunice/5	6	C-SO_x - 15,800 2-02-002-02 3-01-090-99	Recode
		Lea	El Paso Natural Gas	Jal #1/6	6	C-SO_x - 4350 3-01-090-99	Recode
		Lea	El Paso Natural Gas	Jal #2/7	6	C-SO_x - 6 3-06-001-04	Recode
		Lea	El Paso Natural Gas	Jal #3/8	6	C-SO_x - 6184 1-02-006-03; -02 3-06-001-02 3-06-009-99; -01 2-02-002-01	Recode
		Lea	El Paso Natural Gas	Jal #4/9	6	C-SO_x - 15,515 1-02-006-02 2-02-002-02 3-06-009-01	Recode
		Lea	El Paso Natural Gas	Monument Sta./10	6	C-SO_x - 21,606 1-02-006-02 2-01-999-97 2-02-002-02 3-06-009-99	Recode
		Lea	Marathon	--/29	6	A-SO_x - 24 3-01-090-99 4-03-001-01; -02	

Table 4 (continued). LIST OF GAS PROCESSING PLANTS IN SIXTEEN STATES THAT HAVE SOUR GAS RESOURCES

State	AQCR	County	Company	Plant/ID	Source	Comments*	
NM	155	Lea	Northern Natural Gas	--/35	6	C 3-06-001-02 1-02-006-02 2-02-002-02 4-03-001-01	Recode
		Lea	Northern Natural Gas	Block 12/37	6	C 2-02-002-02	Recode
		Lea	Northern Natural Gas	Block 19/38	6	C-SO_x - 11 2-02-002-02	Recode
		Lea	Northern Natural Gas	Eunice Station/36	6	C 2-02-002-02	Recode
		Lea	Northern Natural Gas	Hobbs Gathering #1/39	6	C-SO_x - 18 2-02-002-02	Recode
		Lea	Northern Natural Gas	Hobbs Gathering #2/40	6	C-SO_x - 56 2-02-002-02	Recode
		Lea	Northern Natural Gas	Hobbs/41	6	C 2-02-002-02	Recode
		Lea	Northern Natural Gas	Hobbs Refrigeration/42	6	C 2-02-002-02	Recode
		Lea	Perry Gas Processors	Antelope Ridge/43	6	C-SO_x - 467 3-06-009-99	Recode
		Lea	Phillips Petro.	Eunice Station/44	6	C-SO_x - 6309 2-02-002-02 1-02-006-02 3-06-009-01 3-01-009-99 4-03-001-01	Recode

Table 4 (continued). LIST OF GAS PROCESSING PLANTS IN SIXTEEN STATES THAT HAVE SOUR GAS RESOURCES

State	AQCR	County	Company	Plant/ID	Source	Comments*	
NM	155	Lea	Phillips Petro.	Hobbs/45	6	C-SO_x - 1308 1-02-006-02 2-02-002-02 3-06-009-01 3-01-009-99	Recode
		Lea	Phillips Petro.	Lee/46	6	C-SO_x - 2146 1-02-006-03; -02 3-06-001-02 2-02-002-02 3-01-009-99 3-06-009-01	Recode
		Lea	Phillips Petro.	Lovington/47	6	C-SO_x - 433 1-02-006-03 2-02-002-02 3-01-009-99 4-03-001-03	Recode
		Lea	Phillips Petro.	Lusk/48	6	C-SO_x - 5320 3-06-001-02 2-02-002-02 4-03-001-03 3-06-009-99	Recode
		Lea	Phillips Petro.	Wilson	3	A	
		Lea	Skelly Oil	Eunice #1-2	3	A	
		Lea	Texaco	Buckeye	3	A	
		Lea	Tipperary	Denton	3	A	
		Lea	Warren Petro.	Eunice #161/60	6	C-SO_x - 1710 3-06-001-02 1-02-006-02 2-02-002-02 3-01-009-99 4-03-001-01	Recode

Table 4 (continued). LIST OF GAS PROCESSING PLANTS IN SIXTEEN STATES THAT HAVE SOUR GAS RESOURCES

State	AQCR	County	Company	Plant/ID	Source	Comments*	
NM	155	Lea	Warren Petro.	Monument/65	6	A 2-02-002-02	
		Lea	Warren Petro.	Saunders	3	A	
		Lea	Warren Petro.	Tatum/62	6,8	A-SO_x - 2400 2-02-002-02 3-01-090-99 4-03-001-01; -02 3-06-009-99	
		Lea	Warren Petro.	Tatum/66	6	A 2-02-002-02	
		Lea	Warren Petro.	Vada #139/64	6	C 2-02-002-02 4-03-001-02	Recode
		Roosevelt	Cities Service	Chaverog Sta./2	6	A 2-02-002-02	
		Roosevelt	Cities Service	E. Bluitt Sta./3	6,8	A 2-02-002-02	
		Roosevelt	Cities Service	Todd/155	6	A 2-02-002-02	
ND	172	Burke	Hunt Industries	McGregor/2	6	C-SO_x - 370 3-06-999-99	Recode
		Burke	Texaco	Lignite/71	6	C 3-06-999-99; -98	Recode
		McKenzie	True Oil	Red Wing Creek	3	A	
		Williams	Hunt Industries	N. Tioga	6	C 3-06-999-99	Recode
		Williams	Signal Gas	Tioga/4	6	C-SO_x - 4550 3-06-999-99 1-02-006-02 3-06-999-98	Recode

Table 4 (continued). LIST OF GAS PROCESSING PLANTS IN SIXTEEN STATES THAT HAVE SOUR GAS RESOURCES

State	AQCR	County	Company	Plant/ID	Source	Comments*	
OK	184	Canadian	Mustang Fuel	Calumet	3	A	
		Cleveland	Continental Oil	Short Junction	3	A	
		Cleveland	Sun Oil	Moore/2	3,6	C 2-02-002-02 3-06-001-04	Recode
		Dewey	Shell Oil	Seiling	3	A	
		Grady	Mobil Oil	Chitwood/1	3,6	C 3-06-001-04	Recode
		Grady	Phillips Petro.	Bradley/3	3,6	C 1-02-006-02 2-02-002-02 3-06-009-01	Recode
		Grady	Phillips Petro.	Norge	3	A	
		Grady	Warren Petro.	Knox	3	A	
		Kingfisher	Amoco Production	N. Okarche	3	A	
		Kingfisher	Cities Service	Rodman-Basin-Choate/2	3,6	C 1-02-006-03	Recode
		Kingfisher	Continental Oil	Hennessey	3	A	
		Kingfisher	Exxon	Dover-Hennessey	3	A	
		Kingfisher	Humble Oil & Ref.	Hennessey/1	6	C 1-02-006-01	Recode
		Lincoln	Eufaula Enterp.	Sue Davenport	3	A	
		Lincoln	Sun Oil	Carney/3	3,6	C 3-06-001-04	Recode
		Logan	Eason Oil	#3	3	A	
		McClain	Sohio Petro.	Norman	3	A	
		McClain	Sun Oil	Dibble/4	3,6	C 2-02-002-02 3-06-001-04	Recode
		Oklahoma	Champlin Petro.	Witcher	3	A	

Table 4 (continued). LIST OF GAS PROCESSING PLANTS IN SIXTEEN STATES THAT HAVE SOUR GAS RESOURCES

State	AQCR	County	Company	Plant/ID	Source	Comments*	
OK	184	Oklahoma	Phillips Petro.	Edmond/3	3,6	C 1-02-006-03 2-02-002-02 3-06-005-02	Recode
		Oklahoma	Phillips Petro.	Katz Booster/7	6	C 2-02-002-02	Recode
		Oklahoma	Phillips Petro.	Oklahoma City/6	6	C 3-06-005-02 2-02-002-02	Recode
		Oklahoma	Phillips Petro.	Oklahoma Gas/8	3,6	C 1-02-006-02 2-02-002-02 3-06-005-02	Recode
	185	Garfield	Arco	Covington	3	A	
		Garfield	Champlin Petro.	Enid/4	3,6	C 3-06-001-04	Recode
		Garfield	Cities Service	Rodman/2	3,6	C 1-02-006-02 2-02-002-02	Recode
		Grant	Continental Oil	Medford	3	A	
		Grant	CRA, Inc.	Lamont	3	A	
		Grant	Sun Oil	Wakita/1	3,6	C 2-02-002-02 3-05-001-04	Recode
		Kay	Cities Service	Ambrose/1	3,6	C 1-02-006-02 3-06-001-04 2-02-002-02 3-06-007-01 3-06-005-02	Recode

Table 4 (continued). LIST OF GAS PROCESSING PLANTS IN SIXTEEN STATES THAT HAVE SOUR GAS RESOURCES

State	AQCR	County	Company	Plant/ID	Source	Comments*	
OK	185	Kay	Cities Service	Garrett	3	A	
		Kay	Eufaula Enterp.	Marli	3	A	
		Kay	Sun Oil	Tonkawa	3	A	
	186	Creek	Arco	Covington	3	A	
		Creek	Kerr-McGee	Milfay/2	3,6	C 1-01-006-03 2-01-002-01	Recode
	187	Alfalfa	Champlin Petro.	--/2	6	A 4-03-002-04	
		Alfalfa	Signal Oil & Gas	Aline/1	3,6	C 2-02-002-02	Recode
		Beaver	Amoco Production	Elmwood	3	A	
		Beaver	Cabot	Beaver/2	3,6	C 1-02-006-03 2-02-002-02	Recode
		Beaver	El Paso Natural Gas	Beaver	3	A	
		Beaver	Northern Natural Gas	Cabot-Highland	3	A	
		Beaver	Texaco	Camrick	3	A	
		Beaver	Warren Petro.	Forgan/1	6	C 3-06-001-02	Recode
		Beaver	Warren Petro.	Mocane	3	A	
		Blaine	Amoco Prod.	Hitchcock	3	A	
		Blaine	Amoco Prod.	Star-Lacey	3	A	
		Cimarron	Colorado Interstate Gas	Keyes/1	3,6	C 2-02-002-02	Recode
		Custer	Mobil Oil	Thomas/3	6	C 2-02-002-02	Recode
		Custer	Tx. Oil & Gas	Custer	3	A	

Table 4 (continued). LIST OF GAS PROCESSING PLANTS IN SIXTEEN STATES THAT HAVE SOUR GAS RESOURCES

State	AQCR	County	Company	Plant/ID	Source	Comments*	
OK	187	Dewey	Exxon	Camargo	3	A	
		Dewey	Humble	Camargo/1	6	C 2-02-002-02 3-06-001-04	Recode
		Dewey	Mobil	Northeast Trail	3	A	
		Dewey	Mobil	Putnam Oswego	3	A	
		Dewey	Mobil	Taloga/2	6	C 2-02-002-02	Recode
		Dewey	Mobil	W. Putnam	3	A	
		Dewey	Signal Oil & Gas	Taloga/3	6	C 2-02-002-02	Recode
		Ellis	Tx. Oil & Gas	S. Bishop	3	A	
		Harper	Sun Oil	Laverne/1	3,6	C-SO_x - 4 3-06-001-04	Recode
		Harper	Sun Oil	Lovedale/2	6	C 2-02-002-02	Recode
		Major	Phillips Petro.	Sooner #1	3	A	
		Major	Pioneer Gas Prod.	Ringwood/1	3,6	C-SO_x - 2 2-02-002-02 3-06-001-04	Recode
		Major	Tenneco	Ames	3	A	
		Major	Tx. Oil & Gas	Jeffries	3	A	
		Major	Union Tx. Petro.	Chaney Dell	3	A	
		Texas	Anadarko Prod.	N. Richland Center	3	A	
		Texas	Cities Service	Murdock/7	3,6	C-SO_x - 4 3-06-001-04	Recode
		Texas	Dorchester Gas	Hooker/1	6	C-SO_x - 3 1-01-006-02 3-06-001-04	Recode
		Texas	Dorchester Gas	Panoma	3	A	

Table 4 (continued). LIST OF GAS PROCESSING PLANTS IN SIXTEEN STATES THAT HAVE SOUR GAS RESOURCES

State	AQCR	County	Company	Plant/ID	Source	Comments*	
OK	187	Texas	Excelsior Oil	Tyrone	3	A	
		Texas	Mapco	Tyrone/2	3,6	C-SO_x - 3 2-02-002-02 3-06-001-04	Recode
		Texas	Mobil	Guymon/4	6	C 3-06-001-04 2-02-002-02	Recode
		Texas	Mobil	Postle Hough	3	A	
		Woodward	Amoco Prod.	Mooreland	3	A	
		Woodward	Mobil	Seiling	3	A	
		Woodward	Phillips Petro.	Cimarron	3	A	
	188	Carter	Signal Oil	Duncan/2	6	C 2-02-002-02 1-02-006-02	Recode
		Carter	Signal Oil	Fox	3	A	
		Carter	Union Oil	Caddo	3	A	
		Garvin	Warren Petro.	Antioch/6	6	C 2-02-002-02	Recode
		Garvin	Warren Petro.	Lindsay/5	6	C 2-02-002-02	Recode
		Garvin	Lone Star Gas	Katie	3	A	
		Garvin	Lone Star Gas	Wallville	3	A	
		Garvin	Sohio Petro.	Elmore/2	3,6	C 1-02-006-02 2-02-002-02	Recode
		Garvin	Warren Petro.	Maysville/4	3,6	C 1-02-006-01 2-02-002-02	Recode
		Love	Chevron Oil	Marietta	3	A	

Table 4 (continued). LIST OF GAS PROCESSING PLANTS IN SIXTEEN STATES THAT HAVE SOUR GAS RESOURCES

State	AQCR	County	Company	Plant/ID	Source	Comments*	
OK	188	Love	Texaco	Enville	3	A	
		Marshall	Pioneer Gas	Madill/1	3,6	C 1-02-006-02 2-02-002-02	Recode
		Okfuskee	Grimes, Otha	Grimes	3	A	
		Pontotoc/Coal	Koch Oil	Fitts	3	A	
		Pontotoc	Sun Oil	Steedman	3	A	
		Seminole	Arco	Seminole	3	A	
	189	Beckman	Shell Oil	Elk City/1	3,6	C 1-02-006-02 2-02-002-02	Recode
		Caddo	Texaco	Apache	3	A	
		Stephens	Mobil	Sholem Alechem/6	3,6	C 2-02-002-02 3-06-001-04	Recode
		Stephens	Skelly Oil	E. Velma Middle Block/4	3,6	C 1-02-006-02 2-02-002-02 3-06-001-04 3-06-009-01	Recode
		Stephens	Skelly Oil	Marlow/3	3,6	C-SO_x - 22 2-02-002-02 3-06-001-04	Recode
		Stephens	Skelly Oil	Stephens/8	6	C 2-02-002-02 1-02-006-01 4-90-999-99	
		Stephens	Warren Petro.	Marlow/5	6	C 1-02-006-03 3-06-001-04 2-02-002-02	Recode

Table 4 (continued). LIST OF GAS PROCESSING PLANTS IN SIXTEEN STATES THAT HAVE SOUR GAS RESOURCES

State	AQCR	County	Company	Plant/ID	Source	Comments*	
TX	022	Anderson	Getty Oil	Cayuga	1	A	
		Anderson	Texas Oil & Gas	Slocum	1,3	A	
		Camp	Delhi Gas Pipeline	Gilmer	1	C-SO_x - 8621	Recode
		Cass	Breckenridge Gasoline	Lodi	1,3	A	
		Cass	Shell	Bryans Mill	1,3	B-SO_x - 6015	Dual
		Cherokee	Exxon	Neches	1,3	A	
		Cherokee	Exxon	Reklaw	3	A	
		Franklin	Delhi Gas Pipeline	Chitsey	1	C-SO_x - 1463	Recode
		Franklin	Getty Oil	New Hope	1,3	A	
		Gregg	Atlantic-Richfield	Longview	1,3	A	
		Gregg	Cities Service Oil	East Texas	1,3	C-SO_x - 845	Recode
		Gregg	United Gas Pipeline	Willow Springs	3	A	
		Gregg	Warren Petroleum	Gladewater	1,3	A	
		Gregg	Warren Petroleum	Spear	1,3	A	
		Harrison	Ark-La Gas	N. Lansing	3	A	
		Harrison	Ark-La Gas	Waskam	1,3	A	
		Harrison	Dorchester	Woodlawn	1,3	A	
		Harrison	United Gas Piepline	Blocker	3	A	
		Henderson	Hunt Oil	Fairway	1,3	A	
		Henderson	Lone Star Gas	Trinidad	1,3	A	
		Henderson	Lone Star Producing	Opelika	1,3	A	
		Hopkins	Schneider, Corey & Josey	Nelta	1	A	
		Hopkins	Signal Oil & Gas	Birthright	1,3	B	Dual
		Hopkins	Warren Petroleum	Como	1,3	B-SO_x - 3650	Dual

* All SO_x emissions in short tons/year.

Table 4 (continued). LIST OF GAS PROCESSING PLANTS IN SIXTEEN STATES THAT HAVE SOUR GAS RESOURCES

State	AQCR	County	Company	Plant/ID	Source	Comments*	
TX	022	Panola	Champlin Petroleum	East Texas	1,3	A	
		Panola	Champlin Petroleum	San Jacinto Gas	1	A	
		Panola	Cities Service Oil	Panola	1,3	A	
		Panola	United Gas Pipeline	Carthage	1,3	A	
		Rusk	Atlantic-Richfield	Price	1,3	A	
		Rusk	Exxon	East Texas	1,3	A	
		Rusk	Parade	Giles	1,3	A	
		Smith	Etexas Producers Gas	Chapel Hill	1,3	A	
		Smith	Sun Oil	Shamburger	3	A	
		Upshur	Ark-La Gas	Gilmer	1	C-SO_x - 614	Recode
		Van Zandt	Amoco Products	Edgewood	1,3	B-SO_x - 14321	Dual
		Van Zandt	Cities Service Oil	Myrtle Springs	1,3	B-SO_x - 9839	Dual
		Van Zandt	Cities Service Oil	Welch	1	A-SO_x - 251	
		Van Zandt	Union Oil	Van	1,3	A	
		Wood	Amoco Production	West Yantic	1,3	B-SO_x - 2413	Dual
		Wood	Ark-La Gas	Manziel	3	A	
		Wood	CRA, Inc.	Caska	1	A	
		Wood	CRA, Inc.	Quitman	1,3	A	
		Wood	Exxon	Hawkins	3	A	
		Wood	Wanda Petroleum	Hainesville	3	A	
		Marion	Ark-La Gas	Jefferson	3	B	Dual
		Marion	Texas O & G	East Texas	3	A	
	106	Hardin	Atlantic-Richfield	Silsbee	1,3	A	
		Hardin	Atlantic-Richfield	S. Hampton	1,3	A	
		Hardin	HNG Petro. Chem.	Pavey	1,8	A	
		Houston	Union Oil	Ft. Trinidad	1,3	A	
		Howard	Skelly	E. Vealmoor	1,3	C-SO_x - 1668	Recode

Table 4 (continued). LIST OF GAS PROCESSING PLANTS IN SIXTEEN STATES THAT HAVE SOUR GAS RESOURCES

State	AQCR	County	Company	Plant/ID	Source	Comments*	
TX	106	Jefferson	Continental Oil	Port	1,3	A	
		Jefferson	Exxon	Amelia	3	A	
		Jefferson	Exxon	Lovell Lake	3	A	
		Jefferson	Petroleum Gas Producing	--	3	A	
		Jefferson	Union Texas Petroleum	Marrs-McLean Dryex	3	A	
		Jefferson	Union Texas Petroleum	Winnie	3	A	
		Jefferson	Warren Petroleum	Fannett	3	A	
	210	Archer	Gas Systems	McGregor	1	A	
		Callahan	Martix Land	Box-Elmdale	3	A	
		Coleman	Valera Oil	Duncan	1	A	
		Commanche	Trumter Petroleum	Comp. Sta.	1	A	
		Eastland	Lone Star Gas	Hill Lake	1	A	
		Eastland	Lone Star Gas	Pueblo	1,3	A	
		Eastland	Lone Star Producing	Ranger 108	1,3	A	
		Eastland	Mobil Oil	Desdemona	1,3	A	
		Eastland	West Centex Gas	Pioneer	1	A	
		Eastland	West Centex Gas	Ranger	1	A	
		Fisher	Continental Oil	Hamlin	1,3	C-SO_x - 135	Recode
		Fisher	Tipperary	Claytonville	1,3	A	
		Hardemann	Shell Oil	Conley	1,3	A	
		Nolan	Amoco Production	White Flat	1,3	A	
		Nolan	Champlin Petroleum	North Dora	1	A	
		Nolan	El Paso Natural Gas	Westlake	1,3	A	
		Nolan	Otha H. Grimes	North Dora	1,3	A	

Table 4 (continued). LIST OF GAS PROCESSING PLANTS IN SIXTEEN STATES THAT HAVE SOUR GAS RESOURCES

State	AQCR	County	Company	Plant/ID	Source	Comments*	
TX	210	Nolan	Hylton Gas	--	1	A	
		Nolan	Pronto Gas	Sweetwater	1	A	
		Scurry	Chevron Oil	Snyder	1,3	A	
		Scurry	Monsanto	Diamond M	1	C-SO_x - 600	Recode
		Scurry	Monsanto	Sharon Ridge	1,3	A	
		Scurry	Sun Oil	Snyder	3	A	
		Scurry	Texaco, Inc.	Fuller	1,3	A	
		Shackelford	Atlantic-Richfield	Albany	1	A	
		Shackelford	Coastal States Gas Producing	Albany	1,3	A	
		Shackelford	Petroleum Corp. of Texas	Ibex	1,3	A	
		Shackelford	Warren Petroleum	Shackelford	1,3	A	
		Stephens	Arapaho Petroleum	O. Tomlin A & B	3	A	
		Stephens	Breckenridge Gasoline	Eliasville	1,3	A	
		Stephens	Permian	Possum Kingdom	3	A	
		Stephens	Petroleum Corp. of Texas	Woodson	1,3	A	
		Stephens	Warren Petroleum	Breckenridge	1,3	A	
		Stonewall	Cities Service Oil	Stonewall	1,3	A	
		Throckmorton	Lewtex O & G	Throckmorton	1	A	
		Wichita	Regal Petroleum	Co-op Plant #1	1	A	
		Wilbarger	Mobil Oil	Electra	3	A	
		Young	Lewtex O & G	Graham	1	A	
		Young	Lone Star Gas	Graham	3	A	
		Young	Petroleum Corp. of Texas	Plant #3	1,3	A	
		Jack	Black Hawk Gas	Sewell Field	3	A	

Table 4 (continued). LIST OF GAS PROCESSING PLANTS IN SIXTEEN STATES THAT HAVE SOUR GAS RESOURCES

State	AQCR	County	Company	Plant/ID	Source	Comments*	
TX	210	Jack	Cities Service Oil	Gibtown	1,3	A	
		Jack	Palo Pinto O & G	Markley	1,3	A	
		Jack	Lone Star Gas	Jacksboro	1	A	
		Kent	General Crude Oil	Salt Creek	3	A	
		Montague	Tipperary	Bowie	1,3	A	
	211	Carson	Cabot	Bryan	1	A	
		Carson	Dorchester Gas Prod.	Cargray	1,3	A	
		Carson	Shell Oil	Bryan	3	C-SO_x - 159	Recode
		Carson & Gray	Skelly	Crawford-Shafer	1,3	C-SO_x - 1089	Recode
		Cochran	Cities Service Oil	Lehman	1,3	B	Dual
		Collingsworth	Lone Star Gas	E. Panhandle	3	A	
		Gray	Amarillo Oil	Pampa	3	A	
		Gray	Cities Service Oil	Lefors	3	A	
		Gray	Cities Service Oil	Pampa	1,3	A	
		Gray	Coltexo	Plant 78-1	1	A	
		Gray	Kerr-McGee	Pampa	1,3	A	
		Gray	Phillips Petroleum	Gray	1,3	A	
		Gray	Phillips Petroleum	North Plant	1,3	A	
		Gray	Pioneer Natural Gas	Pampa	1	A	
		Gray	Skelly Oil	Kings Mill	1	C-SO_x - 323	Recode
		Hale	Amoco Production	Anton Irish	1,3	A	
		Hansford	Phillips Petroleum	Hansford	3	A	
		Hansford	Phillips Petroleum	Sherman	1,3	C-SO_x - 1010	Recode
		Hockley	Amoco Production	Anton-Irish	1	C-SO_x - 602	Recode
		Hockley	Amoco Production	Levelland	1,3	C-SO_x - 543	Recode
		Hockley	Amoco Production	Ropes	3	A	
		Hockley	Amoco Production	Slaughter	1	B-SO_x - 929	Dual
		Hockley	Perry Gas Processing	Levelland	3	A	

Table 4 (continued). LIST OF GAS PROCESSING PLANTS IN SIXTEEN STATES THAT HAVE SOUR GAS RESOURCES

State	AQCR	County	Company	Plant/ID	Source	Comments*	
TX	211	Hutchinson	Colorado Interstate Gas	Sanford	1	A	
		Hutchinson	Mapco, Inc.	Westpan 1000	1,3	A	
		Hutchinson	Natural Gas Pipeline	161 Plant	1,3	A	
		Hutchinson	Panhandle Producing	Sanford	1,3	A	
		Hutchinson	Phillips Petroleum	Canadian	1,3	A	
		Hutchinson	Phillips Petroleum	Pantex	3	A	
		Hutchinson	Phillips Petroleum	Rock Creek	1,3	A	
		Hutchinson	Phillips Petroleum	Sanford	1,3	A	
		Hutchinson	Skelly	Watkins	1	C-SO_x - 1435	Recode
		Ochiltree	Northern Natural Gas	Spearman	1,3	A	
		Ochiltree	Skelly	Spearman	1,3	A	
		Potter	Amarillo Oil	Fain	1,3	C-SO_x - 128	Recode
		Potter	Amarillo Oil	Turkey Creek	1,3	C-SO_x - 54	Recode
		Roberts	Transwestern Pipeline	Cree Flowers	1	A-SO_x - 49	
		Terry	Amerada-Hess	Adair	1,3	C-SO_x - 1540	Recode
		Wheeler	Gerlane Petroleum	Mobeetie	1,3	A	
		Wheeler	Warren Petroleum	McLean	1,3	A	
		Yoakum	Amoco Production	Prentice	1,3	C-SO_x - 1821	Recode
		Yoakum	Shell Oil	Wassom	1,3	C-SO_x - 15397	Recode
		Moore	Colorado Interstate Gas	Bivins	1,3	A	
		Moore	Colorado Interstate Gas	Fourway	1,3	A	
		Moore	Diamond Shamrock O & G	McKee	3	B	Dual

Table 4 (continued). LIST OF GAS PROCESSING PLANTS IN SIXTEEN STATES THAT HAVE SOUR GAS RESOURCES

State	AQCR	County	Company	Plant/ID	Source	Comments*	
TX	211	Moore	El Paso Natural Gas	Dumas	1	A	
		Moore	Kerr-McGee	Cactus Plant #12	1	A	
		Moore	Natural Gas Pipeline	162 Plant	1,3	A	
		Moore	Northern Natural Gas	Sunray	1	A	
		Moore	Panhandle Eastern Pipeline	Cabot Booster	1	A	
		Moore	Panhandle Eastern Pipeline	Sneed	1	A	
		Moore	Panhandle Eastern Pipeline	Sunray	1	A	
		Moore	Phillips Petroleum	Dumas	1,3	C-SO_x - 956	Recode
		Moore	Phillips Petroleum	Sneed	1,3	C-SO_x - 429	Recode
	212	Freestone	Getty Oil	Teas Field	1	B-SO_x - 3853	Dual
		Leon	Lone Star Gas	Red Oak	3	A	
		Limestone	Lone Star Gas	Box Church	1	A	
		McLennan	Cities Service Oil	Waco	1,3	A	
		Madison	Lone Star Gas	Madisonville	3	A	
	213	Hidalgo	Amoco Production	LaBlanca	1,3	A	
		Hidalgo	Anchor Gas	Tabasco	1,3	A	
		Hidalgo	Clark Fuel Producing	Sullivan City	3	A	
		Hidalgo	Coastal States Gas Producing	Hidalgo	1,3	A	
		Hidalgo	Coastal States Gas Producing	Mission	1,3	A	
		Hidalgo	Products Recovery, Inc.	Monte Christo	3	A	

Table 4 (continued). LIST OF GAS PROCESSING PLANTS IN SIXTEEN STATES THAT HAVE SOUR GAS RESOURCES

State	AQCR	County	Company	Plant/ID	Source	Comments*	
TX	213	Hidalgo	Shell Oil	McAllen	1,3	A	
		Hidalgo	Tenneco Oil	Ward	1,3	A	
		Starr	Clark Fuel Producing	S. Kelsey	3	A	
		Starr	George H. Coates	Jay Simmons	3	A	
		Starr	Continental Oil	Rincon	1,3	A	
		Starr	Intrastate Gathering	Rio Grande City	3	A	
		Starr	W. B. Osborne	G. P. Cart	1	A	
		Starr	Shell Oil	North Rincon	1,3	A	
		Starr	Sun Oil	Sun	1,3	A	
		Webb	Coastal States Gas Producing	Freer	1,3	A	
		Webb	Texas O & G	Laredo	3	A	
		Willacy	Amoco Production	La Sal Vieja	1,3	A	
		Willacy	Amoco Production	Willamar Miocene	1,3	A	
		Jim Hogg	Atlantic-Richfield	NE. Thompsonville	3	A	
		Jim Hogg	Perry Gas	Thompsonville	3	A	
		Jim Hogg	Sohio Petroleum	Prado	3	A	
	214	Aransas	Tenneco Oil	Pearce	1,3	A	
		Bee	Amoco Production	Burnell-North Pettus	3	A	
		Bee	Coastal States Gas Producing	Pawnee	1	C-SO_x - 439	Recode
		Bee	Getty Oil	Normanna	1,3	A	
		Bee	HNG Petrochemicals	Tuleta	1,3	A	
		Brooks	Exxon	Kelsey	1,3	A	
		Brooks	Exxon	Pita	3	A	
		Brooks	Exxon	Santa Fe	1,3	A	
		Brooks	Exxon	Viboras	1,3	A	

Table 4 (continued). LIST OF GAS PROCESSING PLANTS IN SIXTEEN STATES THAT HAVE SOUR GAS RESOURCES

State	AQCR	County	Company	Plant/ID	Source	Comments*
TX	214	Brooks	HNG Petrochemicals	Loma Blanco	1,3	A
		Brooks	Texaco, Inc.	Encinitas	1,3	A
		Calhoun	Aluminum Co. of America	Alcoa	3	A
		Calhoun	Cities Service Oil	San Antonio Bay	1,3	A
		Calhoun	Exxon	Heyser	1,3	A
		Calhoun	Exxon	Kellers Bay	3	A
		DeWitt	Coastal States Gas Producing	Gohlke	1,3	A
		DeWitt	Shell Oil	Goehlke	1	A
		Duval	Exxon	NE. Loma Novia	1,3	A
		Duval	Mobil Oil	Hagist	1,3	A
		Duval	Trinity	Sejita	1	A
		Nueces	Amoco Production	Luby	1,3	A
		Nueces	Champlin Petroleum	Gulf Plains	1,3	A
		Nueces	Cities Service Oil	Robstown	1,3	A
		Nueces	Coastal States Gas Producing	Corpus Christi	1,3	A
		Nueces	Exxon	Flour Bluff	1,3	A
		Nueces	HNG Petrochemicals	Robstown	1,3	A
		Nueces	Sun Oil	Luby	1,3	A
		Nueces	Tenneco Oil	Dean	1,3	A
		Nueces	United Gas Pipeline	Agua Dulce	3	A
		Refugio	Amoco Production	LaRosa	1,3	A
		Refugio	Atlantic-Richfield	Refugio	3	A
		Refugio	Exxon	Tom O'Connor	1,3	A
		Refugio	HNG Petrochemicals	Refugio	1,3	A
		Refugio	HNG Petrochemicals	Tivoli	3	A

Table 4 (continued). LIST OF GAS PROCESSING PLANTS IN SIXTEEN STATES THAT HAVE SOUR GAS RESOURCES

State	AQCR	County	Company	Plant/ID	Source	Comments*
TX	214	Refugio	Hunt Industries	Zoller	1,3	A
		Refugio	Interstate Gathering	Lambert	3	A
		San Patricio	Atlantic-Richfield	Taft	1,3	A
		San Patricio	Cities Service Oil	Corpus Bay	1,3	A
		San Patricio	HNG Petrochemicals	Gregory	1,3	A
		San Patricio	Marathon Oil	Welder	1,3	A
		San Patricio	Mobil Oil	White Point	3	A
		San Patricio	Sun Oil	Redfish Bay	1,3	A
		San Patricio	Superior Oil	Portilla	1,3	A
		San Patricio	Warren Petroleum	Encinal	1,3	A
		Victoria	HNG Petrochemicals	Victoria	1,3	A
		Victoria	Sun Oil	Victoria	1,3	A
		Jackson	Exxon	W. Ranch	3	A
		Jackson	Mobil Oil	Vanderbilt	1,3	A
		Jackson	Sun Oil	Carancahua	1,3	A
		Jim Wells	Coastal States Gas Producing	Falfurrias	1,3	A
		Jim Wells	Mobil Oil	La Gloria	1,3	A
		Jim Wells	Mobil Oil	Seeligson	1,3	A
		Jim Wells	Sun Oil	Tijerina-Canales	1,3	A
		Jim Wells	Texaco, Inc.	Tijerina	1,3	A
		Kenedy	Exxon	Sarita	1,3	A
		Kleberg	Chevron Oil	Chevron Field	1	A
		Kleberg	Cities Service Oil	May	1,3	A
		Kleberg	Exxon	King Ranch	1,3	A
		Lavaca	Mobil Oil	Wilcox	1,3	A
		Live Oak	Atlantic-Richfield	Nueces River	1,3	A
		Live Oak	Exxon	Ramirena	3	A

Table 4 (continued). LIST OF GAS PROCESSING PLANTS IN SIXTEEN STATES THAT HAVE SOUR GAS RESOURCES

State	AQCR	County	Company	Plant/ID	Source	Comments*	
TX	214	Live Oak	Mobil Oil	Clayton	3	A	
		Live Oak	Mobil Oil	Karon	3	A	
		Live Oak	Mobil Oil	Kittie	1,3	A	
		McMullen	Atlantic-Richfield	E. Rhodes Ranch	3	A	
		McMullen	Atlantic-Richfield	Roos Field Center	3	A	
		McMullen	Trans. Jefferson Chem.	--	1	B-SO_x - 3387	Dual
	215	Cooke	Chevron	Sivells Bend	1,3	A	
		Cooke	Union Texas Petroleum	Walnut Bend	1,3	A	
		Denton	Southwestern Gas Pipeline	Ponder	3	A	
		Denton	Texas O & G	Denton	3	A	
		Grayson	Chevron Oil	New Mag	1,3	A	
		Grayson	Chevron Oil	Sherman	1,3	A	
		Grayson	Texaco, Inc.	Handy	3	A	
		Grayson	Texaco, Inc.	Hanoyogas	1	A	
		Navarro	Gulf Energy & Development	Powell	1,3	B	Dual
		Navarro	Highland Resource	Currie Center	1	A	
		Navarro	Permian	Liquid Petroleum Storage Facility	1	A	
		Navarro	Texas O & G	Currie	3	A	
		Palo Pinto	Lone Star Gas	Gordon	1,3	A	
		Palo Pinto	Southwestern Gas Pipeline	Lone Camp #1	3	A	
		Palo Pinto	Southwestern Gas Pipeline	Mineral Wells #1	1,3	A	
		Parker	Lone Star Gas	Springtown	1,3	A	

Table 4 (continued). LIST OF GAS PROCESSING PLANTS IN SIXTEEN STATES THAT HAVE SOUR GAS RESOURCES

State	AQCR	County	Company	Plant/ID	Source	Comments*
TX	215	Parker & Wise	LVO Corp.	Parker County Pipeline	3	A
		Wise	Cities Service Oil	Chico	1,3	A
		Wise	Cities Service Oil	Old East Plant	1	A
		Wise	Warren Petroleum	G M & A	1,3	A
		Wise	Upham O & G	--	1	A
	216	Brazoria	Amoco Production	Hastings	1,3	A
		Brazoria	Amoco Production	Old Ocean	1,3	A
		Brazoria	Exxon	Pledger	1,3	A
		Brazoria	HNG Petrochemicals	Alvin	3	A
		Brazoria	HNG Petrochemicals	Liverpool	3	A
		Brazoria	Monsanto	Manor Lake	3	A
		Brazoria	Phillips Petroleum	Alvin	1	A
		Brazoria	Phillips Petroleum	Brazoria	1,3	A
		Brazoria	Shell Oil	Buccaneer	1,3	A
		Chambers	Cities Service Oil	Mont Belvieu	1,3	A
		Chambers	Enterprise Products	LaMont Belvieu	1	A
		Chambers	Exxon	Anahuac	1,3	A
		Chambers	Getty Oil	Umbrella	3	A
		Chambers	Pennzoil	Galveston Bay	3	A
		Chambers	United Texas Transmission	Galveston Bay	1	A
		Colorado	Liquid Products Recovery	E. Ramsey	3	A
		Colorado	Shell Oil	Houston Central	1,3	A
		Colorado	Superior Oil	Ramsey	1,3	A
		Colorado	Tenneco Oil	Chesterville	1,3	A
		Fort Bend	Lone Star Gas	Needville	3	A
		Galveston	Amoco Gas	Texas City	3	A

Table 4 (continued). LIST OF GAS PROCESSING PLANTS IN SIXTEEN STATES THAT HAVE SOUR GAS RESOURCES

State	AQCR	County	Company	Plant/ID	Source	Comments*	
TX	216	Galveston	Amoco Production	South Gillock	1,3	A	
		Galveston	HNG Petrochemicals	Lafayette	3	A	
		Galveston	Hunt Trust Estate	Alta Loma	1,3	A	
		Galveston	Pan American Gas	Texas City	1	A	
		Harris	Exxon	Clear Lake	3	A	
		Harris	Exxon	Tomball	3	A	
		Harris	HNG Petrochemicals	Bammell	1,3	C-SO_x - 72	Recode
		Harris	Tenneco Oil	LaPorte	1,3	A	
		Harris	Texaco, Inc.	Humble	1,3	A	
		Harris	Wanda Petroleum	Pierce Junction	1,3	C-SO_x - 29	Recode
		Waller	Exxon	Katy	1,3	A	
		Wharton	Getty Oil	W. Bernard	1,3	A	
		Wharton	Exxon	Magnet Withers	3	A	
		Liberty	Atlantic-Richfield	Dayton	1,3	A	
		Liberty	Atlantic-Richfield	Hull	1,3	A	
		Liberty	Exxon	S. Liberty	3	A	
		Liberty	Liquid Products Recovery	Raywood	3	A	
		Matagorda	Amoco Production	East Bay City	1,3	A	
		Matagorda	Coastal States Gas Production	Bay City	1,3	A	
		Matagorda	Exxon	Sugar Valley	3	A	
		Matagorda	Marathon Oil	Markham	1,3	A	
		Matagorda	Monsanto	El Maton	3	A	
		Matagorda	Tenneco Oil	Blessing	1	A	
		Matagorda	Tenneco Oil	Leabo	1,3	A	
		Matagorda	Texaco, Inc.	Blessing	3	A	
		Montgomery	Champlin Petroleum	Conroe	1,3	A	
		Montgomery	Exxon	Conroe	1,3	A	
		Montgomery	Superior Oil	Lake Creek	1,3	A	

Table 4 (continued). LIST OF GAS PROCESSING PLANTS IN SIXTEEN STATES THAT HAVE SOUR GAS RESOURCES

State	AQCR	County	Company	Plant/ID	Source	Comments*	
TX	217	Atascosa	Atlantic-Richfield	Fashing	1,3	B-SO_x - 638	Dual
		Atascosa	Elcor Chemical	Fashing	1	B-SO_x - 646	Dual
		Atascosa	Exxon	Jourdanton	1,3	C-SO_x - 5900	Recode
		Atascosa	Lone Star Producing	Fashing	1,3	A	
		Atascosa	Warren Petroleum	Fashing	1,3	B	Dual
		Bexar	Coastal States Gas Producing	San Antonio	1,3	A	
		Dimmitt	Sun Oil	Big Well #1	1,3	A	
		Frio	Suburban Propane Gas	Martha F. Berry	1,3	A	
		Gonzales	HNG Petrochemicals	DuBose	1	A	
		Karnes	Coastal States Gas Producing	Hobson Treating	1	C-SO_x - 4488	Recode
		Karnes	Shell Oil	Person	1,3	B-SO_x - 1779	Dual
		Maverick	Continental Oil	Chittim Ranch	3	A	
	218	Andrews	Amoco Production	Midland Farms	1,3	B-SO_x - 192	Dual
		Andrews	Amoco Production	S. Fullerton	1,3	B-SO_x - 104	Dual
		Andrews	Amoco Production	Three Bar	1	A	
		Andrews	El Paso Natural Gas	Fullerton	1	C-SO_x - 8991	Recode
		Andrews	El Paso Natural Gas	St. Andrews Field	1	A	
		Andrews	Northern Natural Gas	Andrews Station	1	A	
		Andrews	Phillips Petroleum	Andrews	1,3	A	
		Andrews	Phillips Petroleum	Fullerton	1,3	C-SO_x - 2103	Recode
		Andrews	Texaco, Inc.	Mabee	1,3	C-SO_x - 78	Recode
		Andrews	Union Oil of California	Bakke	1,3	C-SO_x - 1022	Recode

Table 4 (continued). LIST OF GAS PROCESSING PLANTS IN SIXTEEN STATES THAT HAVE SOUR GAS RESOURCES

State	AQCR	County	Company	Plant/ID	Source	Comments*	
TX	218	Andrews	Union Oil of California	Dollarhide	1,3	A	
		Coke	Exxon	Bronte	1	A	
		Coke	McCulloch Gas Processing	Bronte	1,3	A	
		Coke	Sun Oil	Jameson	1,3	A	
		Coke	Union Texas Petroleum	Perkins	1,3	A	
		Concho	Sun Oil	Concho	3	A	
		Crane	Atlantic-Richfield	Block 31	1,3	A	
		Crane	Atlantic-Richfield	Imperial	3	A	
		Crane	El Paso Natural Gas	McElroy-Crane	1	A-SO_x - 1549	
		Crane	Exxon	Sand Hills	3	B	Dual
		Crane	Mobil	Sand Hills	1	A-SO_x - 1719	
		Crane	Mobil	Univ.-Waddel-Devon	1	A-SO_x - 52	
		Crane	Perry Gas Processors	Imperial	1,3	A	
		Crane	Phillips Petroleum	Crane	1,3	B-SO_x - 10619	Dual
		Crane	Warren Petroleum	Sand Hills	1,3	C-SO_x - 5058	Recode
		Crane	Warren Petroleum	Waddell	1,3	B	Dual
		Crockett	Atlantic-Richfield	Ozona	3	A	
		Crockett	Cities Service Oil	West World	1,3	A	
		Crockett	Delhi Gas Pipeline	MPI Plant	1	A	
		Crockett	Delta Drilling	Ozona	3	A	
		Crockett	El Paso Natural Gas	Midway Lane	1	A-SO_x - 2078	
		Crockett	Ozona Gas	O. G. Plant	1	A	
		Crockett	Permian	Todd	3	A	

Table 4 (continued). LIST OF GAS PROCESSING PLANTS IN SIXTEEN STATES THAT HAVE SOUR GAS RESOURCES

State	AQCR	County	Company	Plant/ID	Source	Comments*	
TX	218	Crockett	Perry Gas Processing	N. Trippett	1	A-SO_x - 211	
		Crockett	Shell Oil	N. Ozona	1,3	A	
		Crockett	Shell Oil	Tippett	1,3	A	
		Crockett	Texaco, Inc.	Ozona	1,3	A	
		Dawson	Cities Service Oil	Welch	1,3	B	Dual
		Dawson	Texaco, Inc.	Lamesa	1,3	A	
		Ector	Amarillo Oil	Andector	1	B-SO_x - 296	Dual
		Ector	Amarillo Oil	E. Goldsmith	1,3	A-SO_x - 175	
		Ector	Amoco Production	N. Cowden	1,3	B-SO_x - 5166	Dual
		Ector	El Paso Natural Gas	Goldsmith	1	A-SO_x - 924	
		Ector	El Paso Natural Gas	TXL	1	A	
		Ector	Getty Oil	Headlee	1,3	C-SO_x - 183	Recode
		Ector and Midland	Odessa Natural Corp.	Foster	1,3	B-SO_x - 969	Dual
		Ector	Phillips Petroleum	Ector	1,3	A	
		Ector	Phillips Petroleum	Goldsmith Gas	1	C-SO_x - 2606	Recode
		Ector	Phillips Petroleum	Goldsmith Sulfur	1,3	B-SO_x - 14632	Dual
		Ector	Shell Oil	TXL	1,3	C-SO_x - 7295	Recode
		Gaines	Cities Service Oil	W. Seminole	1,3	B-SO_x - 3540	Dual
		Gaines	Phillips Petroleum	Seminole Gas	1	C-SO_x - 3986	Recode
		Irion	Atlantic-Richfield	Mertzon	1,3	A	
		Irion	CRA, Inc.	Mertzon	1	C-SO_x - 144	Recode
		Irion	J. L. Davis	Irion	3	A	
		Pecos	Coastal States Gas Producing	Gomez	1	C-SO_x - 980	Recode
		Pecos	Coastal States Gas Producing	Gray Ranch	3	A	

Table 4 (continued). LIST OF GAS PROCESSING PLANTS IN SIXTEEN STATES THAT HAVE SOUR GAS RESOURCES

State	AQCR	County	Company	Plant/ID	Source	Comments*	
TX	218	Pecos	Coastal States Gas Producing	Petco	1	A-SO_x - 921	
		Pecos	Coastal States Gas Producing	W. Gomez	1	A-SO_x - 313	
		Pecos	El Paso Natural Gas	Puckett	1,3	A	
		Pecos	El Paso Natural Gas	Santa Rosa	1,3	A	
		Pecos	H. L. Hunt	Pecos Valley	3	A	
		Pecos	Intratex Gas	Gomez	1	C-SO_x - 313	Recode
		Pecos	Lone Star	Pikes Peak	1	A	
		Pecos	Marathon	Yates	1,3	A	
		Pecos	Mobil Oil	Coyanosa	1,3	B-SO_x - 3878	Dual
		Pecos	Mobil Oil	Waha	1,3	C-SO_x - 130	Recode
		Pecos	Northern Natural Gas	Gomez	1	A-SO_x - 407	
		Pecos	Northern Natural Gas	Jasper	1,3	A-SO_x - 373	
		Pecos	Northern Natural Gas	Mitchell	1	A	
		Pecos	Northern Natural Gas	Oates	1	A	
		Pecos	Northern Natural Gas	Pikes Peak	1	A-SO_x - 33	
		Pecos	Phillips Petroleum	Puckett	1,3	A	
		Pecos	Texas O & G	Coyanosa	1,3	A-SO_x - 11543	
		Pecos	Transwestern Pipeline	Chinot-Putnam Treating	1	A-SO_x - 42	
		Pecos	Transwestern Pipeline	Puckett	1	A	

Table 4 (continued). LIST OF GAS PROCESSING PLANTS IN SIXTEEN STATES THAT HAVE SOUR GAS RESOURCES

State	AQCR	County	Company	Plant/ID	Source	Comments*	
TX	218	Reagan	Dorchester	Texon	1,3	B-SO_x - 655	Dual
		Reagan	El Paso Natural Gas	Barnhart	1	A	
		Reagan	El Paso Natural Gas	Midkiff	1,3	A	
		Reagan	Pecos Co.	Barnhart	3	A	
		Reagan	Southwest Forest Gas Gathering	Rocker B	3	A	
		Reeves	Coastal States Gas Producing	Greasewood	1	A-SO_x - 2794	
		Reeves	Continental Oil	Ramsey	1,3	C-SO_x - 37	Recode
		Reeves	El Paso Natural Gas	Waha	1	A-SO_x - 4064	
		Reeves	Phillips Petroleum	Tunstill	1,3	A	
		Reeves	Texaco, Inc.	Knight	1	A	
		Schleicher	Atlantic-Richfield	Eldorado	1,3	C-SO_x - 38	Recode
		Sutton	HNG Petrochemicals	Sonora	3	A	
		Sutton	HNG Petrochemicals	Sutton	3	A	
		Terrell	Creole Production Service	Terrell	1	A	
		Terrell	El Paso Natural Gas	Terrell	1	A	
		Tom Green	Beacon Gasoline	Beacon & Strawn Plant	1,3	C-SO_x - 106	Recode
		Tom Green	CRA, Inc.	Mertzon	1,3	A	
		Tom Green, Mason and Perry	Lone Star Gas	Carlsbad	3	A	
		Tom Green	Marathon Oil	Markham	1,3	A	
		Upton	Atlantic-Richfield	Crane	1,3	C-SO_x - 172	Recode

Table 4 (continued). LIST OF GAS PROCESSING PLANTS IN SIXTEEN STATES THAT HAVE SOUR GAS RESOURCES

State	AQCR	County	Company	Plant/ID	Source	Comments*	
TX	218	Upton	El Paso Natural Gas	Jack Herbert	3	A	
		Upton	El Paso Natural Gas	Wilshire	1,3	C	Recode
		Upton	Phillips Petroleum	Benedum	1,3	A	
		Ward	Cabot	Estes	1,3	C-SO_x - 1110	Recode
		Ward	Coastal States Gas Producing	Block 21	1	A-SO_x - 2541	
		Ward	Coastal States Gas Producing	Mivada	1	A-SO_x - 7208	
		Ward	Coastal States Gas Producing	Pyote	1	A-SO_x - 2841	
		Ward	El Paso Natural Gas	Sealy Smith	1,3	A	
		Ward	Exxon	Pyote	3	A	
		Ward	Natural Gas Pipeline	160 Plant	1	A	
		Ward	Northern Natural Gas	Blair	1	A	
		Ward	Northern Natural Gas	Lockridge	1	A	
		Ward	Northern Natural Gas	Ward Co. #1	1	A	
		Ward	Perry Gas	Pyote Devonian	3	A	
		Ward	Perry Gas	Pyote Ellenberger	3	A	
		Ward	Perry Gas	S. Barstow	3	A	
		Ward	Texaco, Inc.	Lockridge	1,3	A	
		Ward	Transwestern Pipeline	Estes	1	A-SO_x - 1511	

Table 4 (continued). LIST OF GAS PROCESSING PLANTS IN SIXTEEN STATES THAT HAVE SOUR GAS RESOURCES

State	AQCR	County	Company	Plant/ID	Source	Comments*	
TX	218	Ward	Transwestern Pipeline	Pyote	1	A-SO_x - 3910	
		Ward	Warren Petroleum	Monohans	1,3	C-SO_x - 3925	Recode
		Upton	Union Texas Petroleum	Benedum	3	A	
		Winkler	Amoco Production	Monohans	1,3	A-SO_x - 270	
		Winkler	Perry R. Bass	Halley	1,3	A-SO_x - 187	
		Winkler	Cabot	Walton	1,3	C-SO_x - 1982	Recode
		Winkler	Chevron Oil	Kermit	1,3	A	
		Winkler	El Paso Natural Gas	Keystone M/L Plant	1	A	
		Winkler	Natural Gas Pipeline	164 Plant	1	C-SO_x - 2520	Recode
		Winkler	Northern Natural Gas	Bravo	1	A	
		Winkler	Northern Natural Gas	Halley Dehyd.	1	A	
		Winkler	Norther Natural Gas	S. Kermit	1	C-SO_x - 2275	Recode
		Winkler	Sid Richardson Gas	Keystone	1,3	C-SO_x - 41	Recode
		Winkler	Texaco, Inc.	S. Kermit	1,3	A	
		Winkler	Transwestern Pipeline	Halley	1	A-SO_x - 3528	
		Winkler	Transwestern Pipeline	Kermit	1	A-SO_x - 687	
		Winkler	Transwestern Pipeline	Keystone Treating Plant	1	A-SO_x - 4926	
		Winkler	Transwestern Pipeline	Walton	1	A-SO_x - 1572	
		Martin	Adobe Oil	Sale Ranch	3	A	

Table 4 (continued). LIST OF GAS PROCESSING PLANTS IN SIXTEEN STATES THAT HAVE SOUR GAS RESOURCES

State	AQCR	County	Company	Plant/ID	Source	Comments*
TX	218	Martin	Northern Gas Products	Jasper	1,3	A
		Martin	Northern Natural Gas	Spraberry	3	A
		Midland	Amarillo Oil	Ranchland	3	A
		Midland	Atlantic-Richfield	Midland	1,3	A
		Midland	Cities Service Oil	Roberts Ranch	1,3	A
		Midland	El Paso Natural Gas	Driver	1	A
		Midland	El Paso Natural Gas	Tex.-Harvey	1	A
		Midland	Mobil Oil	Pegasus	1,3	A
		Midland	Northern Natural Gas	Spraberry	1	A
		Midland	Phillips Petroleum	Spraberry	1,3	A
		Midland	Warren Petroleum	Azalea	1,3	A

Table 4 (continued). LIST OF GAS PROCESSING PLANTS IN SIXTEEN STATES THAT HAVE SOUR GAS RESOURCES

State	AQCR	County	Company	Plant/ID	Source	Comments*	
WY	241	Converse	Phillips Petro.	Douglas	3	A	
		Fremont	Amoco	Beaver Creek	3	B	Dual
		Fremont	Arco	Riverton Dome	3	B	Dual
		Natrone	Kansas-Nebraska Natural Gas	Caspar	3	A	
	243	Campbell	Arco	Gillette	3	A	
		Campbell	Apexco	Recluse	3	A	
		Campbell	CRA, Inc.	Gillette	3	A	
		Campbell	Ginther, N.C.	Rozet	3	A	
		Campbell	Ginther, N.C.	Springen	3	A	
		Campbell	McCulloch	Jamison Prong	3	A	
		Campbell	McCulloch	Hilight	3	A	
		Campbell	McCulloch	Oedekoven	3	A	
		Campbell	McCulloch	Ute	3	A	
		Carbon	Colo. Interstate Gas	Rawlins	3	A	
		Carbon	Marathon Oil	McFadden	3	A	
		Johnson	Continental Oil	Sussex	3	A	
		Lincoln	Northwest Pipeline	Opal	3	A	
		Park	Amoco	Elk Basin	3	B	Dual
		Park	Husky Oil	Ralston	3	B	Dual
		Park	Ralston Proc.	Oregon Basin	3	A	
		Sublette	Chevron Oil	Birch Creek	3	A	
		Sweetwater	Champlin Petro.	Patrick Draw	3	A	
		Sweetwater	Colorado Oil	Patrick Draw	3	A	
		Sweetwater	Pasco, Inc.	Bairoil	3	A	
		Uinta	Mountain Fuel	Church Buttes	3	A	
		Washakie	Union Oil	Worland	3	A	

GLOSSARY

Acid Gas

A blend of hydrogen sulfide (H_2S) and carbon dioxide (CO_2) that is separated by the amine process from raw natural gas. Most plants meter their total acid gas.

Amine Process

A process using one of the amines in which raw natural gas is bubbled through the solution which absorbs essentially all CO_2 and H_2S (acid gas). The solution is regenerated by boiling and the acid gas sent on for further processing.
Lean Amine - Amine solution after H_2S is removed by steam stripping.
Rich Amine - Amine solution with H_2S in solution.

Condensate

Known sometimes as distillate. Basically, they are heavier hydrocarbons occurring in the vapor phase at initial reservoir pressure and temperature but condensing into a liquid as confining pressure is reduced.

Cycling Plant

A plant that removes the heavier components from the gas and then reinjects the gas into the formation to maintain reservoir pressure and increase ultimate recovery. The produced gas is often sweetened prior to reinjection.

Field

A single well or group of wells that penetrate and produce from one or more petroleum-bearing formations.

Flare Stack

One common way to dispose of acid gas is to mix it with some raw natural gas and burn it at the end of a flare stack which is simply a tall stack with a burner at its top. The burner is continuously fed with natural gas which serves to ignite all waste gases that come to it from the plant.

Formation

A strata or series of associated earth materials having similar conditions of origin. A gas field will often produce from several formations in a vertical sequence, and the gas found in each may be significantly different chemically.

Grains per 100 std. cu. ft. (Gr./100 ft.^{3})

Standard term for reporting H_2S concentration in natural gas. 1 Gr./100 ft.^{3} is equivalent to 16 ppm (parts per million) of H_2S in natural gas.

Incinerator

A device utilizing air premixing to efficiently burn waste gases having sufficient heating value to burn without added fuel.

Lease

Contract between landowner and another granting the latter right to search for and produce oil or mineral substances upon payment of an agreed rental, bonus, and/or royalty.

Mol Percent

One mol percent of any gas = 10,000 ppm

Sour Gas

Natural gas containing hydrogen sulfide in concentrations of 4 to 16 ppm or greater.

Sulfur Recovery Plants

A plant which recovers elemental sulfur from a charge gas stream composed principally of a mixture of H_2S and CO_2. Where the acid gas stream is sufficient, an operator will elect to install a sulfur recovery plant.

Sweet Gas

Natural gas whose hydrogen sulfide content is less than approximately 4 ppm.

Sweetening Plant

A plant which processes a sour natural gas charge stream, recovers the H_2S and CO_2 content and yields a sweet natural gas stream and an acid gas (H_2S and CO_2) stream as products.

BIBLIOGRAPHY

Abrassart, C. P. (ed.). Oil and Gas Fields of Montana 1958. Billings Geological Society. Billings, Montana. 1959. Looseleaf, unpaged.

Air Pollution Aspects of Emission Sources: Petroleum Refineries - A Bibliography with Abstracts. Environmental Protection Agency, Research Triangle Park, N. C. Publication Number AP-110. July 1972. 53 pp.

American Geological Institute. Dictionary of Geological Terms. Doubleday and Co., Inc. 1962. 545 pp.

Atmospheric Emissions From Sulfuric Acid Manufacturing Processes. HEW. Public Health Service. Cincinnati, Ohio. Publication Number 999-AP-13. 1965. 127 pp.

Beers, W. D. Characterization of Claus Plant Emissions. Environmental Protection Agency. Publication Number 220-376. April 1973. 132 pp.

Boone, W. J., Jr. Helium-Bearing Natural Gases of the United States. Analysis and Analytical Methods. Bureau of Mines. Bulletin 576. 1958. 117 pp.

Cardwell, L. E. and L. F. Benton. Analyses of Natural Gases, 1968. Bureau of Mines. IC 8443. 1969. 169 pp.

Cardwell, L. E. and L. F. Benton. Analyses of Natural Gases, 1971. Bureau of Mines. IC 8554. 1972. 163 pp.

Cardwell, L. E. and L. F. Benton. Analyses of Natural Gases, 1972. Bureau of Mines. Amarillo, Texas. IC 8607. 1973. 104 pp.

Cramer, Richard D., Leroy Gatlin and H. G. Wessman. Oil and Gas Fields of Oklahoma. Volume I. Oklahoma City Geological Society. Oklahoma City, Oklahoma. 1963. Looseleaf, unpaged.

Control Techniques for Hydrocarbons and Organic Solvent Emissions from Stationary Sources. HEW. Publication Number AP-68. March 1970. Unpaged.

Development Document for Effluent Limitations Guidelines and New Source Performance Standards for the Petroleum Refining Point Source Category. Environmental Protection Agency. Washington, D. C. EPA 440/1-74-014-2. April 1974. 195 pp.

Ecology Audits, Inc. Sulfur Compound Emissions of the Petroleum Production Industry. Environmental Protection Agency. Contract 68-02-1308. Task No. 26. Research Triangle Park, N.C. December 1974. 93 pp. plus appendices.

Federal Air Quality Control Regions. Office of Air Programs, Environmental Protection Agency. Rockville, Maryland. AP-102. January 1972. 199 pp.

Gas Processing and Refining Worldwide Directory, 1974-75. Oil and Gas Journal. Annual Publication. 1974. 326 pp.

Jensen, Fred S., Henry H. R. Sharkey, Daniel S. Turner (editors). Oil and Gas Fields of Colorado, 1954. Rocky Mountain Association of Geologists. Denver. 1955. 302 pp.

Katz, D. L., David Cornell, Riki Kobayashi, F. H. Poettmann, J. A. Vary, J. R. Elenbaas and C. F. Weinang. Handbook of Natural Gas Engineering. McGraw-Hill Book Co. New York. 1959. 802 pp.

Kirk, Raymond E. and Donald F. Othmer (editors). Encyclopedia of Chemical Technology. Interscience Encyclopedia, Inc. New York. 1951. Vol. 7, Vol. 13, Vol. 19.

Maddox, R. N. Gas and Liquid Sweetening. Campbell Petroleum Series. Norman, Oklahoma. 1974. 298 pp.

Miller, R. D. and G. P. Norrell. Analyses of Natural Gases of the United States, 1961. Bureau of Mines. IC 8221. 1964. 148 pp.

Miller, R. D. and G. P. Norrell. Analyses of Natural Gases of the United States, 1962. Bureau of Mines. IC 8239. 1964. 120 pp.

Miller, R. D. and G. P. Norrell. Analyses of Natural Gases of the United States, 1963. Bureau of Mines. IC 8241. 1964. 120 pp.

Monitoring and Air Quality Trends Report, 1973. Environmental Protection Agency, Research Triangle Park, N. C. Report Number 450/1-74-007. October 1974. 130 pp.

Moore, B. J., R. D. Miller, and R. D. Shrewsbury. Analyses of Natural Gases in the United States, 1964. Bureau of Mines. IC 8302. 1966. 144 pp.

Moore, B. J. and R. D. Shrewsbury. Analyses of Natural Gases of the United States, 1965. Bureau of Mines. IC 8316. 1966. 181 pp.

Moore, B. J. and R. D. Shrewsbury. Analyses of Natural Gases, 1966. Bureau of Mines. IC 8356. 1967. 130 pp.

Moore, B. J. and R. D. Shrewsbury. Analyses of Natural Gases, 1967. Bureau of Mines. IC 8395. 1968. 187 pp.

Munnerlyn, R. D. and R. D. Miller. Helium-Bearing Natural Gases of the United States: Analyses. Bureau of Mines. Bulletin 617. 1963. 93 pp.

Oil and Gas Fields of Southeastern New Mexico; 1966 Supplement: A symposium. Roswell Geological Society. Roswell, New Mexico. 1967. 185 pp.

Parker, J. M. (ed.). Oil and Gas Field Volume; Colorado-Nebraska, 1961. Rocky Mountain Association of Geol. Denver. 1962. Unpaged.

Preston, Don (editor). A Symposium of the Oil and Gas Fields of Utah, Intermountain Association of Petroleum Geologists. Salt Lake City. 1961. unpaged.

Princeton Chemical Research. Removal of Sulfur Dioxide from Waste Gases by Reduction to Elemental Sulfur. United States Department of Commerce. PB 200-071. July 1969. 295 pp.

Snider, L. C. Petroleum and Natural Gas in Oklahoma. Harlow-Ratliff Co. Oklahoma City, Oklahoma. 1913. 196 pp.

Society of Petroleum Engineers. Statistics of Oil and Gas Development and Production. American Inst. of Mining. Metallurgical and Petroleum Engineers. 1958. Vol. 13.

Southerland, James H. and William M. Vatavuk. Source Test Data System, System Sciences, Inc. National Air Data Branch, Monitoring and Data Analyses Division. August 1973. Unpaged.

Standard Industrial Classification Manual. Department of Commerce. Washington, D. C. 1972.

Stephenson, Eugene A. Natural Gas. University of Kansas. 1956. Pages 15-20.

Symposium on Michigan Oil and Gas Fields. Michigan Basin Geological Society. Lansing, Michigan. 1968. 199 pp.

Tyler, Charles D. and Robert S. George (editors). Oil and Gas Fields of North Dakota. North Dakota Geological Society Symposium Committee. Bismarck, North Dakota. 1962. 220 pp.

Vatavuk, William M. National Emissions Data System (NEDS) Control Device Workbook. Environmental Protection Agency. Research Triangle Park, N. C. Publication Number APTD-1570. July 1973. Unpaged.

Wagner, C. Richard (editor). Oil and Gas Fields of the Texas and Oklahoma Panhandles. Panhandle Geological Society. Amarillo, Texas. 1961. 264 pp.

Wyoming Oil and Gas Fields Symposium. Wyoming Geological Association. N.P. 1957. 484 pp.

Appendix A

Data Summary of Sour Gas Production for Table 3

Appendix A

Data Summary of Sour Gas Production for Table 3

AQCR Number	H_2S mol Percent Maximum	Minimum	Mean	Number of Samples [a]
24	7.5	0.08	2.09	23
32	5.3	0.5	3.66	5
31	1.6	0.6	0.89	24
33	1.0	1.0	1.0	1
211	0.74	0.0145	0.26	16
210	0.057	0.053	0.055	2
215	2.66	2.3	2.54	3
212	0.89	0.25	0.57	2
214	0.72	0.45	0.59	3
218	8.0	0.004	0.63	71
217	2.28	0.75	1.41	7
155	17.48	0.023	0.83	28
5	15.0	0.02	3.30	25
22	2.77	0.02	0.55	15
188	0.3	0.3	0.3	1
187	1.1	1.1	1.1	1
126	0.5	0.5	0.5	1
143	0.4	0.4	0.4	1
141	8.0	0.1	3.93	3
243	11.7	0.1	2.34	21
241	5.4	0.1	1.26	12
40	1.4	0.1	0.31	11
38	0.3	0.3	0.3	1
36	0.1	0.1	0.1	2
37	2.0	0.1	0.49	11
14	1.9	0.09	0.71	46
172	3.7	0.5	1.74	5
19	0.25	0.04	0.15	2
134	0.69	0.67	0.68	2

3.58 % avg.

[a]Low number of samples indicates that only a small amount of sour gas is produced in the area. Single samples are used in this table to indicate sour gas H_2S content because they are the only records for the AQCR.

TECHNICAL REPORT DATA
(Please read Instructions on the reverse before completing)

1. REPORT NO.	2.	3. RECIPIENT'S ACCESSION NO.
4. TITLE AND SUBTITLE Atmospheric Emissions Survey of the Gas Processing Industry		5. REPORT DATE September 1975 (submitted) 6. PERFORMING ORGANIZATION CODE
7. AUTHOR(S) Billy J. Mullins, Jr.; Dehn E. Solomon; Gary L. Austin; Linda M. Kacmarcik		8. PERFORMING ORGANIZATION REPORT NO. 757-01
9. PERFORMING ORGANIZATION NAME AND ADDRESS Ecology Audits, Inc. 11061 Shady Trail Dallas, Texas 75229		10. PROGRAM ELEMENT NO. 11. CONTRACT/GRANT NO. 68-02-1865 Modification 1
12. SPONSORING AGENCY NAME AND ADDRESS Environmental Protection Agency National Air Data Branch Research Triangle Park, North Carolina 27711		13. TYPE OF REPORT AND PERIOD COVERED Final 14. SPONSORING AGENCY CODE

15. SUPPLEMENTARY NOTES

16. ABSTRACT

Atmospheric emissions from the gas processing industry originate from compressor and pump engines, boilers for process heating and solution regeneration, and gas "sweetening", the removal of hydrogen sulfide from the natural gas. This research effort concerned itself only with emissions from gas sweetening processes, primarily the amine type processes because of the widespread use of amine processes to the exclusion of other sweetening processes. Emissions from gas sweetening are the combustion products of the acid waste gases following their removal from the raw natural gas, and include sulfur dioxide with negligible emissions of particulates, nitrogen oxides, hydrocarbons and carbon monoxide.

An emissions factor for SO_2 was developed. SO_2 emissions from gas sweetening are directly proportional to the mol percentage of H_2S in the intake gas to the sweetening plant. Emissions are calculated by multiplying the whole number representing mol percent H_2S by the factor 1685 to get pounds of SO_2 per million cubic feet of intake gas sweetened. When the concentration of H_2S is not known, a table is presented giving average H_2S concentrations in gas produced in Air Quality Control Regions.

New Source Classification Codes are proposed for the industry. A list of over 1,000 gas processing plants is presented with notes on their emissions.

17. KEY WORDS AND DOCUMENT ANALYSIS

a. DESCRIPTORS		b. IDENTIFIERS/OPEN ENDED TERMS	c. COSATI Field/Group
Acid Gas Sour Gas Sweet Gas Amine Process Hydrogen Sulfide Flare Stack Incinerator	Cycling Plant Sulfur Dioxide Raw Natural Gas	Sour Gas Processing Sulfur Recovery Plant Sweetening Plant Emissions Emission Factor	

18. DISTRIBUTION STATEMENT	19. SECURITY CLASS *(This Report)*	21. NO. OF PAGES
	20. SECURITY CLASS *(This page)*	22. PRICE

EPA Form 2220-1 (9-73)

INSTRUCTIONS

1. **REPORT NUMBER**
Insert the EPA report number as it appears on the cover of the publication.

2. **LEAVE BLANK**

3. **RECIPIENTS ACCESSION NUMBER**
Reserved for use by each report recipient.

4. **TITLE AND SUBTITLE**
Title should indicate clearly and briefly the subject coverage of the report, and be displayed prominently. Set subtitle, if used, in smaller type or otherwise subordinate it to main title. When a report is prepared in more than one volume, repeat the primary title, add volume number and include subtitle for the specific title.

5. **REPORT DATE**
Each report shall carry a date indicating at least month and year. Indicate the basis on which it was selected *(e.g., date of issue, date of approval, date of preparation, etc.)*.

6. **PERFORMING ORGANIZATION CODE**
Leave blank.

7. **AUTHOR(S)**
Give name(s) in conventional order *(John R. Doe, J. Robert Doe, etc.)*. List author's affiliation if it differs from the performing organization.

8. **PERFORMING ORGANIZATION REPORT NUMBER**
Insert if performing organization wishes to assign this number.

9. **PERFORMING ORGANIZATION NAME AND ADDRESS**
Give name, street, city, state, and ZIP code. List no more than two levels of an organizational hirearchy.

10. **PROGRAM ELEMENT NUMBER**
Use the program element number under which the report was prepared. Subordinate numbers may be included in parentheses.

11. **CONTRACT/GRANT NUMBER**
Insert contract or grant number under which report was prepared.

12. **SPONSORING AGENCY NAME AND ADDRESS**
Include ZIP code.

13. **TYPE OF REPORT AND PERIOD COVERED**
Indicate interim final, etc., and if applicable, dates covered.

14. **SPONSORING AGENCY CODE**
Leave blank.

15. **SUPPLEMENTARY NOTES**
Enter information not included elsewhere but useful, such as: Prepared in cooperation with, Translation of, Presented at conference of, To be published in, Supersedes, Supplements, etc.

16. **ABSTRACT**
Include a brief *(200 words or less)* factual summary of the most significant information contained in the report. If the report contains a significant bibliography or literature survey, mention it here.

17. **KEY WORDS AND DOCUMENT ANALYSIS**
(a) DESCRIPTORS - Select from the Thesaurus of Engineering and Scientific Terms the proper authorized terms that identify the major concept of the research and are sufficiently specific and precise to be used as index entries for cataloging.

(b) IDENTIFIERS AND OPEN-ENDED TERMS - Use identifiers for project names, code names, equipment designators, etc. Use open-ended terms written in descriptor form for those subjects for which no descriptor exists.

(c) COSATI FIELD GROUP - Field and group assignments are to be taken from the 1965 COSATI Subject Category List. Since the majority of documents are multidisciplinary in nature, the Primary Field/Group assignment(s) will be specific discipline, area of human endeavor, or type of physical object. The application(s) will be cross-referenced with secondary Field/Group assignments that will follow the primary posting(s).

18. **DISTRIBUTION STATEMENT**
Denote releasability to the public or limitation for reasons other than security for example "Release Unlimited." Cite any availability to the public, with address and price.

19. & 20. **SECURITY CLASSIFICATION**
DO NOT submit classified reports to the National Technical Information service.

21. **NUMBER OF PAGES**
Insert the total number of pages, including this one and unnumbered pages, but exclude distribution list, if any.

22. **PRICE**
Insert the price set by the National Technical Information Service or the Government Printing Office, if known.