U.S. DEPARTMENT OF COMMERCE
National Technical Information Service

PB-280 377

Emission Factors and Emission Source Information for Primary and Secondary Copper Smelters

Pacific Environmental Services, Inc, Santa Monica, Calif

Prepared for

Environmental Protection Agency, Research Triangle Park, N C

Dec 77

EPA-450/3-77-051
December 1977

EMISSION FACTORS AND EMISSION SOURCE INFORMATION FOR PRIMARY AND SECONDARY COPPER SMELTERS

U.S. ENVIRONMENTAL PROTECTION AGENCY
Office of Air and Waste Management
Office of Air Quality Planning and Standards
Research Triangle Park, North Carolina 27711

NOTICE

THIS DOCUMENT HAS BEEN REPRODUCED FROM THE BEST COPY FURNISHED US BY THE SPONSORING AGENCY. ALTHOUGH IT IS RECOGNIZED THAT CERTAIN PORTIONS ARE ILLEGIBLE, IT IS BEING RELEASED IN THE INTEREST OF MAKING AVAILABLE AS MUCH INFORMATION AS POSSIBLE.

EPA-450/3-77-051

EMISSION FACTORS AND EMISSION SOURCE INFORMATION FOR PRIMARY AND SECONDARY COPPER SMELTERS

by

G.E. Umlauf and L.G. Wayne

Pacific Environmental Services, Inc.
1930 14th Street
Santa Monica, California 90404

Contract No. 68-02-1890
Task Order No. 3

EPA Project Officer: Arch McQueen

Prepared for

ENVIRONMENTAL PROTECTION AGENCY
Office of Air and Waste Management
Office of Air Quality Planning and Standards
Research Triangle Park, North Carolina 27711

December 1977

This report is issued by the Environmental Protection Agency to report technical data of interest to a limited number of readers. Copies are available free of charge to Federal employees, current contractors and grantees, and nonprofit organizations - in limited quantities - from the Library Services Office (MD-35), Research Triangle Park, North Carolina 27711; or, for a fee, from the National Technical Information Service, 5285 Port Royal Road, Springfield, Virginia 22161.

This report was furnished to the Environmental Protection Agency by Pacific Environmental Services, Inc., 1930 14th Street, Santa Monica, California 90404, in fulfillment of Contract No. 68-02-1890, Task Order No. 3. The contents of this report are reproduced herein as received from Pacific Environmental Services, Inc. The opinions, findings, and conclusions expressed are those of the author and not necessarily those of the Environmental Protection Agency. Mention of company or product names is not to be considered as an endorsement by the Environmental Protection Agency.

Publication No. EPA-450/3-77-051

ACKNOWLEDGEMENT

Successful completion of this project depended upon the cooperation of many individuals including, especially, personnel of EPA Regional Offices and of the air pollution control agencies of many states and of several cities and counties. We wish to express our appreciation to all who participated, even though we forbear to list their names because of the excessive length of the roll.

ABSTRACT

This document constitutes the final report of a project, carried out under U.S. EPA Contract No. 68-02-1890 (Task Order No. 3), to upgrade emission factors and engineering management information for primary and secondary copper smelters. The main body of the report describes procedures and methodology used in obtaining relevant information regarding these industries and the operational characteristics of process equipment used therein. Related information regarding alloying and casting has been included in the description secondary copper smelter processes, and information about emissions from similar furnaces used in nonferrous foundry operations was also collected. New information on source tests was coded for entry into the AEROS SOTDAT files; newly identified sources were coded for entry into NEDS, and information as to the precision of emission factors was furnished for use in the SIEFA data base. New source classification codes (SCC's) were proposed for a number of processes.

Appendixes to this document are the following project deliverables: Appendixes A and B for inclusion in AP-42, "Compilation of Air Pollutant Emission Factors," namely Section 7.3, Primary Copper Smelting and Section 7.9, Secondary Copper Smelting and Alloying; Appendix C, Primary Copper Smelting Process Compendium; and Appendix D, Secondary Copper Smelting Process Compendium.

TABLE OF CONTENTS

Section		Page
1.0	INTRODUCTION	1-1
	1.1 Scope of Work	1-1
	1.2 Task Description	1-1
	1.3 Organization of Final Report	1-2
2.0	RESULTS AND CONCLUSIONS	2-1
	2.1 Project Deliverables	2-1
	2.2 Development of Emission Factors	2-1
3.0	DATA GATHERING	3-1
4.0	DATA ANALYSIS	4-1
	4.1 Data Analysis Procedures	4-1
	4.2 Emission Factors for Primary Smelter Processes	4-6
	4.3 Emission Factors for Particulates From Furnaces Used in Secondary Copper Smelting Processes	4-15
5.0	FUGITIVE EMISSIONS	5-1
	5.1 Introduction	5-1
	5.2 Primary Copper Smelters	5-1
	5.2.1 Pollutants	5-1
	5.2.2 Sources	5-3
	5.3 Secondary Copper Smelters	5-6
	5.4 Fugitive Emission Control	5-7
6.0	RECOMMENDATIONS FOR FURTHER SOURCE TESTING	6-1
	6.1 Precision of Emission Factors	6-2
	6.2 Recommendations for Additional Testing	6-6
7.0	REFERENCES	7-1

Section

APPENDIX A. SECTION 7.3, PRIMARY COPPER SMELTING

APPENDIX B. SECTION 7.9, SECONDARY COPPER SMELTING AND ALLOYING

APPENDIX C. PRIMARY COPPER SMELTING PROCESS COMPENDIUM

APPENDIX D. SECONDARY COPPER SMELTING PROCESS COMPENDIUM

LIST OF ILLUSTRATIONS

Figure		Page
4-1	Check List for Emission Source Information	4-3
4-2	Typical Example of Formatted Test Results	4-5

LIST OF TABLES

Table		Page
2-1	Emission Factors for Particulates From Secondary Copper Smelting and Alloying Processes Without Controls	2-2
2-2	Emission Factors for Sulfur Dioxide for Primary Copper Smelting Processes Without Controls	2-5
2-3	Emission Factors for Particulates From Primary Copper Smelting Processes Without Emission Controls	2-7
4-1	Emissions From Converters in Primary Copper Smelters	4-7
4-2	Emissions From Reverberatory Furnaces in Primary Copper Smelters	4-10
4-3	Combined Emissions From Multiple-Hearth Roasters and Reverberatory Furnaces in Primary Copper Smelters	4-12
4-4	Emission Factors for Smelter Processes Derived From Published Literature	4-16
4-5	Emission Factors for Particulate Matter From Furnaces Used in Secondary Copper Smelting and Alloying Processes	4-17
5-1	Possible Fugitive Emissions From Primary Copper Smelters	5-2
5-2	Fugitive Emission Source, Quantity and Control	5-9
6-1	SIEFA Standard Deviations and Precision Factors for Primary Copper Smelting Processes (Particulate Emissions)	6-3
6-2	SIEFA Standard Deviations and Precision Factors for Primary Copper Smelting Processes (Sulfur Dioxide Emissions)	6-4
6-3	Primary Copper Smelting Processes for Which Emission Factors Should be Developed	6-7

1.0 INTRODUCTION

This report describes the methodology followed and the results achieved by Pacific Environmental Services, Inc. (PES) pursuant to EPA Contract No. 68-02-1890, Task Order No. 3, initiated in October 1976.

1.1 SCOPE OF WORK

The scope of work for this project called for an intensive engineering evaluation of air pollutant emission sources at primary and secondary copper smelters in the United States. It required collection of reference data for primary smelters and for the secondary smelting and alloying industry, as well as the development of emission factors for major types of air-pollution emitting operations and equipment.

1.2 TASK DESCRIPTION

Deliverables contemplated by the contract included a series of documents dealing with process descriptions and emission factors for primary and secondary copper smelter emission sources. These documents were to be prepared in formats consistent with those of the following publications:

1. AP-42, "Compilation of Air Pollutant Emission Factors"*
2. "Engineering Support Manual for NEDS Users"(Ref. 2)
3. AP-42, Appendix C, Source Classification Codes

In addition, machine-readable data inputs were required for updating AEROS component data systems: SOTDAT, NEDS, and SIEFA.

Subtasks designed for the implementation of the work were as follows:

---

* Reference 1, hereafter referred to as "AP-42."

1. Preparation of a list of information sources, including governmental agencies, research organizations, consultants, and nonferrous smelter industry experts, and preparation of a bibliography.
2. Contacting the information sources to obtain information on process descriptions for both primary and secondary smelters and documented point source emissions data both for criteria pollutants and for certain other non-criteria pollutants, including arsenic, cadmium, lead, beryllium, boron, and antimony. The best available information on fugitive emissions was also to be obtained.
3. Analysis of the data to determine emission factors and the AEROS systems input elements.

1.3 ORGANIZATION OF FINAL REPORT

The remainder of this report consists of five sections (Sections 2.0 to 6.0). In Section 2.0, results and conclusions emerging from the study are briefly summarized. In Section 3.0, experience gained in carrying out the data-gathering task is recounted and discussed. In Section 4.0, the methodology of data analysis is reviewed and the results summarized and discussed, in terms of emission factors developed for both primary and secondary smelters. Section 5.0 reviews findings related to the nature and sources of fugitive emissions in smelter operations and discusses suggested means of control or abatement of these emissions. Finally, recommendations regarding further source testing to improve knowledge of smelter emissions, emission factors, and the conditions affecting them are presented and discussed in Section 6.0.

2.0 RESULTS AND CONCLUSIONS

This section summarizes the results obtained and conclusions derived from the study of primary and secondary copper smelting operations.

2.1 PROJECT DELIVERABLES

Products delivered to the Project Officer, in addition to this report and monthly progress reports, include:

1. Process Compendiums for primary and secondary copper smelters.
2. Sections for AP-42, "Compilation of Air Pollutants Emission Factors," for primary and secondary copper smelters.
3. Coding forms for information for AEROS component systems SOTDAT and NEDS, regarding primary and secondary copper smelters. (Since coding forms for SIEFA information have not been designed, SIEFA information is provided only in this report, Section 6.1).

2.2 DEVELOPMENT OF EMISSION FACTORS

The primary objective of this project was to develop new or modified emission factors for particulates from primary and secondary copper smelters and for sulfur dioxide from primary copper smelters. The target approach was to obtain up-to-date reliable emissions test data from as many sources as possible, to arrange these data into logical form, and to calculate both uncontrolled and controlled emission factors for as many source categories as seemed reasonable.

In the case of secondary copper smelting (sometimes called refining), a single furnace operation is almost always involved. Several types of furnaces are utilized in this industry, and emission factors were developed for each of the five types covered in this study. Table 2-1 shows both the emission factors for particulates

Table 2-1. EMISSION FACTORS FOR PARTICULATES FROM SECONDARY COPPER SMELTING AND ALLOYING PROCESSES WITHOUT CONTROLS, COMPARED WITH PUBLISHED FACTORS (AP-42, BRASS AND BRONZE MELTING FURNACES)*

Type of Furnace	kg/MT		lb/ton	
	AP-42	This Study	AP-42	This Study
Crucible	6	11	12	21
Cupola	37	0.002-120	73	0.003-240
Electric Induction	1	3.5 -10	2	7-20
Reverberatory	35	3-18	70	5-36
Rotary	30	5-150	60	10-300

*The ranges represent variations due to charge material. Average factors for these differing materials are given in Section 4.0.

as developed in this project and those currently given in AP-42. Individual test results for each type of furnace covered a fairly wide range as shown in greater detail in Section 4.2 of this report. Some of the factors contributing to this variation include (1) composition of charge: presence of volatile constituents such as arsenic, beryllium, cadmium, and zinc can substantially increase metal oxide emissions; (2) condition of charge: insulation, oil and grease can increase carbonaceous particulates; (3) heating rate: high heat input can increase emissions. Therefore, emission factors should be used with care and augmented with specific information when available.

In the case of sulfur dioxide emissions from primary copper smelters, PES feels that an approach should be taken on emission factors which differs somewhat from that now used. Some of the factors underlying that judgment are listed below:

- AP-42 currently gives factors for roasting, smelting, and converting. These factors cannot be representative for all smelters because emissions depend on sulfur content of the concentrate, and because not all smelters are configured similarly.
- Source tests at some smelters have not dealt with individual sources but with combined effluents from two or more processing units.
- Even for a single point source, test results are not necessarily representative because they depend on the current value of the variable sulfur content of concentrate.
- We have not found any measurements to indicate the actual magnitude of sulfur loss by fugitive emissions.
- Smelting plants without roasters would naturally be expected to have higher emission factors for their other processing units because more sulfur must be removed in these other units.

Consequently, in this study uncontrolled SO_2 emission factors for primary copper smelters have been prepared using the following assumptions:

1. Sulfur content of the concentrate is 32 percent (the national average; varies from a low of 8 percent to a high of 38 percent).
2. Two configurations of smelters are considered - the first including roasting, reverberatory smelting, and converting; the second including only reverberatory smelting and converting.
3. Sulfur dioxide emissions are allocated among the various point sources plus fugitive emissions and slag according to the figures given in the EPA NSPS Background Document for Primary Copper Smelters, EPA 450/2-74-002a. (Ref. 3)

Based upon these assumptions, which are reasonably consistent with source test data obtained in this study, uncontrolled SO_2 emission factors for primary copper smelting are given in Table 2-2 and compared with those currently given by AP-42. There are more individual factors recommended than are presently given by AP-42 and there are some differences in factors for individual processes, but the total uncontrolled SO_2 emissions per ton of concentrate processed remains almost the same.

Factors for controlled sulfur dioxide emissions depend strongly upon the type of control and the portion of the entire smelting operation served by the controls. While there are few smelters with controls on low concentration SO_2 gas streams such as from multiple-hearth roasters and reverberatory smelting furnaces, this situation is changing. Also, some smelters have controls on only a portion of the emissions from any given process. Finally, the increasing use of double contact sulfuric acid plants as control systems has increased control efficiency in some cases from 95 percent for single contact plants to 98 or 99 percent for the double contact plants.

In the case of uncontrolled particulate emissions from primary copper smelters, there is no method of estimating emissions except through the use of source test data. Because of the variability in facilities, operating conditions, feed materials, and test

Table 2-2. EMISSION FACTORS FOR SULFUR DIOXIDE FOR PRIMARY COPPER SMELTING PROCESSES WITHOUT CONTROLS

Process	SO_2 Emissions, kg/MT (lb/ton) Concentrate Recommended	Current AP-42*
Configuration No. 1		
Roasting	205 (410)	30 (60)
Reverberatory Furnace	115 (230)	160 (320)
Converting	270 (540)	435 (870)
Fugitive Emissions	37 (74)	-
Total Uncontrolled	627 (1,254)	625 (1,250)
Configuration No. 2		
Reverberatory	195 (390)	-
Converting	430 (860)	-
Fugitive Emissions	2 (4)	-
Total Uncontrolled	627 (1,254)	-

*In the current AP-42 only one set of emission factors are given. No distinction is made as to smelter configuration.

methods, it is likely that results from one group of tests will differ from those obtained from another group unless both groups are very large and unbiased in the parameters influencing the results. Therefore, the results of this study were used to modify the current AP-42 emission factors on the assumption that increasing the test base decreases the standard error.

No additional information was obtained on uncontrolled particulates from roasting or fire refining nor was information obtained on potential additional sources of particulates not currently covered in AP-42, such as concentrate and flux crushers anode furnaces, and newer smelting processes - electric arc smelting and flash smelting. Uncontrolled particulate emission factors developed from this study are compared with those currently given in AP-42, and recommended new factors are given in Table 2-3.

Controlled particulate emissions depend strongly upon the type and capacity of control equipment. Electrostatic precipitators are widely used in the primary copper smelting industry. High efficiency scrubbers are used as supplementary control in many cases where additional particulate control is required prior to feeding exhaust gases to sulfuric acid plants. Efficiencies from 95 percent to 99 percent can be attained.

Much additional information on emissions of SO_2 and particulates from both primary and secondary copper smelting is given in Section 4.0 of this report. Tables summarizing the data provide information on the range of results obtained and the number of tests available. Fugitive emissions are discussed in Section 5.0.

Precisions of the emission factors developed in this study and the need for additional source tests are discussed in Section 6.0. For primary smelting processes the precision (standard error) of the factors is generally less than 35 percent for

Table 2-3. EMISSION FACTORS FOR PARTICULATES FROM PRIMARY COPPER SMELTING PROCESSES WITHOUT EMISSION CONTROLS

	Particulate Emissions, kg/MT (lb/ton) Concentrate		
Process	This Study	Current AP-42	Recommended
Roasting	-	22.5 (45)	22.5 (45)
Reverberatory Smelting	26 (52)	10 (20)	18 (36)
Converting	12 (24)	30 (60)	21 (42)
Refining	-	5 (10)	5 (10)
Total Uncontrolled	-	67.5 (135)	66.5 (133)

particulates and ranges between 9 and 78 percent. Substantial additional testing on individual processes and on sources not heretofore considered is recommended.

3.0 DATA GATHERING

The data gathering task for this project was performed in order to establish a documented base for the development of emission factors for copper smelting emission points. The task was twofold in the sense that project engineers were required to obtain data from all available information sources, and also were to identify areas where current data were nonexistent. This meant that for some emission points, the effort would have to be exhaustive, to insure that all reasonable sources of information had been investigated.

The principal objective of this task, therefore, was to gather emission-related data in the form of source test reports, emission inventory reports, material balances, etc. Another requirement of the project was that the process-related information obtained be prepared in the form of process compendiums for the primary and secondary copper smelting industries. Data necessary for these reports would include process flow sheets, equipment operating parameters, and raw material and product compositions.

Initially, project personnel established five areas to be investigated for possible contributions in the data gathering phase. These were (1) PES in-house files for 13 of the 15 primary copper smelters, (2) trade literature, (3) professional organizations, (4) governmental agencies, and (5) the smelters themselves. Other sources such as control equipment manufacturers were also considered; however, it was thought that the five identified categories would provide the bulk of the data for the project. In support of the five information areas, project engineers prepared an initial "Resource Information List" which contained names of individuals and organizations which would be contacted for possible information. The list was discussed with the Project Officer and was augmented at the time

to include a particular individual in each of the 10 EPA regional offices who would be the initial contact for the data gathering effort in that regi . In many cases, this individual was the person who had responsibility for the region's NEDS data system. In some regions, however, PES personnel had worked with a particular person on a previous copper smelter project who had a current understanding of the region's available smelter data. All of the 10 EPA regional offices were contacted by mail and by phone as the first step in the process of obtaining data.

To reduce the amount of duplicated effort required for this task, project engineers analyzed the information which was already available in in-house files for 13 of the 15 primary copper smelters. These data had been collected in support of six previous projects which PES had performed or was performing for EPA. In previous work, a large percentage of the tasks had been spent in characterizing the operations of reverberatory furnaces in particular. Thus, it was found that a great deal of process data were available for primary smelting sources. Also, rather extensive bibliographic compilations had been made for these projects which assisted project engineers in their current literature search. Emission estimates were, in general, based upon yearly or monthly average material balances, but in some cases, source test reports were also included in the files.

Almost concurrently, project engineers began investigating technical literature on the smelting processes (Refs. 4 through 17). The EPA library was consulted for reference documents on the subjects, and technical journals were accessed at a nearby university library. Some articles were found in the Journal of Metals, Mining Engineering, and the Engineering and Mining Journal, and a number of government publications were made available through the EPA library. The Air Pollution Technical Information Center (APTIC) was called and a

list of abstracts of publications related to copper smelting was requested. The abstracts were not received, however. Little information in the technical literature contained hard emission data, but many of the documents were filled with much valuable process information. Particularly useful were documents which addressed new areas of process and control technology.

After reviewing literature sources, project engineers were able to compile a list of professional organizations which could be written to for data. The list included the following organizations:

American Bureau of Metal Statistics, New York, New York

American Institute of Mining, Metallurgical, and Petroleum Engineers, New York, New York

American Mining Congress, Washington, D.C.

Brass and Bronze Ingot Institute, Chicago, Illinois

Cast Metal Federation, Rocky River, Ohio

Colorado Mining Association, Denver, Colorado

National Association of Recycling Industries (previously the National Association of Secondary Material Industries), New York, New York

Non-Ferrous Foundry Society, Cleveland, Ohio

Smelter Control Research Association, Columbus, Ohio

Letters were written to each of these organizations in the hope that they had conducted source testing at copper smelters for research purposes. It was known at the time that the Smelter Control Research Association (SCRA), for example, had been conducting pilot plant studies of various air pollution control devices on primary smelting processes. However, the responses from the professional organizations did not supply any hard emission data. The effort expended in contacting these sources was beneficial to staff in that some of the organizations were helpful in suggesting which people to contact at the smelter companies.

The remainder of the effort for data gathering was concentrated on governmental agencies and direct contact with the plants. In order to best access governmental file data, it was necessary to compile a list of all of the primary and secondary copper smelters in the country. The listing of primary smelters was a simple task since there are only 15 plants which are operated in the United States. To compile the listing of secondary plants, project engineers began with a plant name listing from the NEDS data base which was keyed on the SIC codes of 3341, 3351, 3362, 3432, 3446, and 3497. Only the 3341 code pertains uniquely to secondary smelters; however, it was felt that other plants whose main function might be, for instance, as a brass or bronze foundry (3362), could also maintain operations and process equipment which could be found at secondary smelters. To augment the list of sources from NEDS, a recently published report by the Radian Corporation was used. The report presented a multimedia environmental assessment of the secondary metals industry and included a company directly as an appendix. From the data presented in NEDS and the Radian report, lists were prepared of primary and secondary smelters in each of the 10 EPA regions.

Having tabulated the smelters by region, project engineers initiated contacts by letter and by telephone with govenmental agency personnel to ascertain whether relevant data might be available. Federal-, state-, and local-level agencies responded to the data requests by either sending available source test and process information or by indicating that data were available in their fields and project engineers could access the data in their offices. Based upon an evaluation of the number of possible sources in an area and the probable quantity and quality of data to be obtained, the following governmental agency offices were visited by PES personnel:

EPA, Region III, Philadelphia, Pennsylvania

Philadelphia Air Management Services, Philadelphia, Pennsylvania

New Jersey Department of Environmental Protection, Trenton, New Jersey

New Jersey Department of Environmental Protection, Metro field office, Springfield, New Jersey

New Jersey Department of Environmental Protection, Newark field office, Newark, New Jersey

New York State Department of Environmental Conservation, New York, New York

The City of New York Department of Air Resources, New York, New York

EPA, Region V, Chicago, Illinois

Cook County Department of Environmental Control, Maywood, Illinois

Wayne County Department of Health, Air Pollution Control Division, Detroit, Michigan

City of Cleveland Department of Public Health and Welfare, Division of Air Pollution Control, Cleveland, Ohio

State of Ohio Environmental Protection Agency, Columbus, Ohio

City of Chicago Department of Environmental Control, Chicago, Illinois

EPA, Region IX, San Francisco, California

Arizona Department of Health Services, Phoenix, Arizona

South Coast Air Quality Management District, Los Angeles, California

Other agencies which provided information by mail were:

EPA, National Enforcement Investigations Center, Denver, Colorado

EPA, Region IV, Atlanta, Georgia

EPA, Region VII, Kansas City, Missouri

Texas Air Control Board, Austin, Texas

Tennessee Department of Public Health, Division of Air Pollution Control, Nashville, Tennessee

Montana State Department of Health and Environmental Sciences, Helena, Montana

Puget Sound Air Pollution Control District, Seattle, Washington

Bay Area Air Pollution Control District, San Francisco, California

New Mexico Environmental Improvement Agency, Santa Fe, New Mexico

In some cases, the types of data items which were being requested from these agencies were considered to be potentially confidential in nature, and the agencies were reluctant to release the data to a private consultant. In particular, this problem was encountered in EPA, Region IX offices and in the South Coast Air Quality Management District (SCAQMD). Since these two sources were expected to be able to provide a great deal of source test data, special provisions had to be arranged to obtain the information. After many discussions with the SCAQMD, a rather simple solution to the problem was agreed upon. The SCAQMD provided copies of the complete test reports for secondary copper smelters in their jurisdiction, but company names and addresses were deleted in all tests. Eight tests were made available from this source.

The data availability problem in EPA, Region IX, required a great deal more time and effort than was initially expected, but the efforts were rewarded by the acquisition of a large number of pertinent source tests. A request for data was first made to Region IX in early February 1977. PES personnel were informed, at that time, that EPA had done testing at several of the primary smelters in Arizona, but due to impending court decisions, the tests were not immediately available. On March 8, 1977, project engineers visited EPA offices in San Francisco to again discuss the acquisition of the test data. At that time, however, it was decided that a modification to the contract would be necessary to allow PES to access potentially confidential material. Upon

approval of the Project Officer, and in accordance with the specifications set forth by Region IX, the PES contract was suitably modified, and the test results were received on April 29, 1977.

It was apparent at this point in the data gathering task that a great deal of source test data were not going to be available through governmental agencies. It was also apparent most of the testing which had been done by the agencies was performed for compliance determination purposes. As such, most of the emission measurements were taken downstream of control equipment and were often measured in gas streams which had been combined from a number of processes. Project engineers contacted other governmental agencies which were thought to be more inclined to do research testing rather than compliance testing, such as the U.S. Bureau of Mines OAQPS, and the Industrial Environmental Research Laboratory of EPA. No usable test data were obtained from these sources, however.

After making contact with 37 governmental agencies, in all, project personnel began concentrating their final efforts of this task on the smelting plants themselves. Initially, plant managers at a few of the primary smelters were written to and called. As a standard company policy, however, the plant managers referred our requests, in all cases, to central company offices. PES then contacted personnel who were in charge of environmental matters for an entire copper company. In general, the position that was taken by the copper companies was that all testing which had been performed had already been submitted to the proper governmental agency and would have to be obtained through their offices. It is not known how much of the test data presumably submitted by the smelters ultimately was obtained from the governmental agencies contacted.

4.0 DATA ANALYSIS

4.1 DATA ANALYSIS PROCEDURES

In order to facilitate the review of the data which had been gathered, a filing system was organized to allow ready access to individual items of information. Preparation of the project deliverables basically required a progression of four steps as outlined below:

1. Identification of processes
2. Writing of process descriptions
3. Analysis of source tests
4. Development of emission factors

With this framework in mind, project engineers classified the data into a series of process files. From the process file system, project personnel could withdraw data to be used in the writing of a process description or the development of an emission factor for a particular smelting process. These files ultimately were destined to serve as backup data for NADB.

The identification of processes to be included for study in this project was straightforward. The previously referenced multimedia assessment report by Radian (Ref. 18) listed the significant air pollution sources at secondary smelters. Based upon this report, the secondary smelter data were organized into files for the following processes:

1. Reverberatory furnaces
2. Electric induction and arc furnaces
3. Crucible furnaces
4. Pot furnaces
5. Insulated wire burners
6. Oil removal processes (dryers)

7. Rotary furnaces
8. Cupola (shaft and blast) furnaces
9. Converters (BOF)

Primary smelter data elements were also organized into files for the following operations:

1. Concentrate and flux preparation processes
2. Multiple-hearth roasters
3. Fluidized-bed roasters
4. Reverberatory smelting furnaces
5. Electric arc smelting furnaces
6. Flash smelting furnaces
7. Converters
8. Fire-refining furnaces
9. Electrolytic refining processes
10. Continuous smelting furnaces
11. Hydrometallurgical smelting processes
12. Sulfuric acid manufacturing plants

Separate files were also maintained for information on fugitive emissions and noncriteria pollutant emissions at primary and secondary smelters.

Process information in the files could be accessed without much difficulty. Project engineers began to compose the various process descriptions, and the process data appeared to be complete, current, and readily usable. In order to better organize the emission data in the files, project engineers developed a check-list for emission source test information (Figure 4-1). Recording the test results in a standardized format expedited accessing the data and simplified the task of coding. A typical example of a recorded source test report in the PES standardized format is shown in Figure 4-2. Use of this format could greatly simplify future projects in which data are to be gathered and eventually coded into

Firm's Name and Address

Source involved; contaminants involved

Process information:

- Products and production rates (specify units)
- Raw materials and charging rates (specify units)
- Maximum annual capacity (specify units)
- If batch process, maximum batch capacity (specify units)
- Typical batch time
- If continuous, maximum daily capacity
  maximum hourly capacity
- Seasonal variation (typical) in activity

Control equipment:

- Type, model, operating parameters
- Rated efficiency for various pollutants
- Configuration in relation to source

Emission point(s):

- Stack parameters
- Configuration in relation to sources and control units

Comments:

Report of source test

- Sampling position; pollutant
- Number of samples taken at this sampling position
- Fraction of batch, cycle, or day represented by sampling periods
- Weighted pollutant concentration in effluent gases
- Implied emission rates, hourly
  daily
  annually
- Implied emission factors per SCC unit
  (specify SCC unit)

Comments:

Sampling information

- Date
- Pollutant
- Sampling method
- Sampling position (related to stack, control device, and source configuration)
- Number of samples taken at this sampling position

Figure 4-1. Check List for Emission Source Information

Sample number (entry made for last sample)

- Production rate and condition at time of sampling, including fuel and feed compositions if relevant
- Sampling time in relation to batch, cycle, or day
- Sampling period, minutes
- Sampling flow rate or total volume sampled (specify)
- Total pollutant found in sample (specify units)
- Pollutant concentration in gas sampled (specify units)

Comments:

Figure 4-1. Check List for Emission Source Information (Concluded)

Firm: J. Doe Refining

Source: Arc furnace

Process: Producing molten high-temperature alloys
Raw materials: Cu-Ni pit scrap, iron ore, limestone, fluorspar
Maximum batch capacity: 5,000 pounds
Typical batch time: 2 hours

Control Equipment:

Baghouses: 10,000 ACFM, 2,500 fpm, 175°F
Efficiency: rated 99.9 percent
Configuration: 3 baghouses serving a swing-away hood via fixed intake point in duct above hood

Emission Point:

Stack: no data
Configuration: one of three serving baghouses

Sampling Information:

Date: 052671 Run No: 01
Sampling Position: stack top (emission control)
Production Rate: ca 20,000 pounds/day

Sample Results:

Total particulates: controlled, reported at 1.36 lb/hr; uncontrolled, reported at 2.5 lb/hr. Corresponding annual figures cited at 0.34 and 0.63 tons/yr, respectively.

Comments:

It is assumed, although not stated, that the values cited are averaged over an entire batch period. It is not clear whether more than 1 baghouse serves a single hood, and whether there are other stacks serving other baghouses.

Figure 4-2. Typical Example of Formatted Test Results

SOTDAT, since the information could be transcribed directly from the data source onto the PES form.

The task of coding the source test data into SOTDAT, while simplified by the standard test result format, still required a great deal of effort. For the most part, source test information was incomplete. Most of the reports presented only information such as pollutant tested, date of sample, measured emission rate, gas flow rate and temperature, and occasionally isokinetic sampling percentages. To provide a complete analysis, project engineers coded all tests onto SOTDAT coding forms (Ref. 19). In all, about 120 tests were coded for primary smelting sources and about 70 tests coded for secondary smelting processes.

Finally, all emission results were compiled in tables for each of the individual processes. These tables included source test results, as well as other types of emission estimates (from material balances, for instance). The results derived from these tables will be discussed in more detail in following sections for the primary and secondary smelting processes.

4.2 EMISSION FACTORS FOR PRIMARY SMELTER PROCESSES

Tables 4-1 through 4-3 present emission factors for primary copper smelting sources. All entries in the tables are given in weight of emissions per unit of concentrate which enters the smelter. The emission results are shown for various smelter configurations and for various control systems to detail the effect of these parameters on the emissions. Average emission factors for each case are unweighted, and maximum and minimum values are included to indicate the range of emissions observed.

The tables show far more tests to determine controlled emissions than uncontrolled. This is consistent with the fact that no test results were received from the smelters or from professional

Table 4-1. EMISSIONS FROM CONVERTERS IN PRIMARY COPPER SMELTERS

A. Particulates, kilograms per metric ton and pounds per ton of concentrate processed by smelter

Smelter[a] Configuration	Control[b] Equipment	Emissions				No. of Tests	No. of Plants Tested
		kg/MT		lb/ton			
		Avg.	Range	Avg.	Range		
1	0	15	11-20	30	21-40	4	1
2	0	8.5	0.7-13	17	1.4-25	4	3
All	0	12	0.7-20	24	1.4-40	8	4
1	1	1.5	0.55-3.5	2.9	1.1-6.9	14	2
1	2	0.19	0.085-0.38	0.38	0.17-0.76	7	2
2	2	0.14	0.025-0.55	0.28	0.05-1.1	19	3
3	2	0.55	0.50-0.70	1.1	1.0-1.4	3	1
All	2	0.20	0.025-0.70	0.39	0.05-1.4	29	6

[a] Configuration 1, converter follows multiple-hearth roaster and reverberatory furnace
Configuration 2, converter follows reverberatory furnace, no roaster
Configuration 3, converter follows fluidized-bed roaster and reverberatory furnace

[b] Control equipment: 0 signifies none operated
1, electrostatic precipitator
2, electrostatic precipitator with acid plant particulate control

Table 4-1. Continued. EMISSIONS FROM CONVERTERS IN PRIMARY COPPER SMELTERS

B. Oxides of sulfur: SO_2, and SO_3 (as H_2SO_4), in kilograms per metric ton and pounds per ton of concentrate processed.

Smelter[a] Configuration	Control[b] Equipment	Pollutant	Emissions				No. of Tests	No. of Plants Tested
			kg/MT		lb/ton			
			Avg.	Range	Avg.	Range		
1	0	SO_2	350	-	700	-	1	1
1	0	SO_3	0.65	-	1.3	-	1	1
2	0	SO_2	650	60-1,500	1,300	120-3,000	5	1
All	0	SO_2	600	60-1,500	1,200	120-3,000	6	2
1	1	SO_2	31	12-50	61	23-99	2	2
1	1	SO_3	0.07	-	0.14	-	1	1
2	1	SO_2	14	1.4-23	27	2.8-46	14	2
2	1	SO_3	0.03	0.01-0.06	0.06	0.01-0.11	13	2
All	1	SO_2	16	1.4-50	31	2.8-99	16	4
All	1	SO_3	0.04	0.01-0.07	0.07	0.01-0.14	14	3
1	2	SO_2	0.31	0.16-0.45	0.62	0.31-0.89	4	1

[a]See footnote a, Table 4-1A

[b]Control equipment: 0 signifies none operated
1 single-contact acid plant
2 double-contact acid plant

Table 4-1. Continued. EMISSIONS FROM CONVERTERS IN PRIMARY COPPER SMELTERS

C. Oxides of nitrogen (NO_x) as nitrogen dioxide (NO_2), kilograms per metric ton and pounds per ton of concentrate processed by smelter.

Smelter configuration 2: converter follows reverberatory furnace; no roaster. No control equipment operated. One test only.

Emissions		
Smelter Configuration	kg/MT Avg.	lb/ton Avg.
2	0.025	0.05

Table 4-2. EMISSIONS FROM REVERBERATORY FURNACES IN PRIMARY COPPER SMELTERS

A. Particulates, kilograms per metric ton and pounds per ton of concentrate processed by smelter.

Smelter[a] Configuration	Control[b] Equipment	Emissions				No. of Tests	No. of Plants Tested
		kg/MT		lb/ton			
		Avg.	Range	Avg.	Range		
2	0	26	21-34	52	42-67	4	2
2	1	11	0.9-34	22	1.7-68	32	3
3	1	1.2	0.13-6.5	2.4	0.25-13	18	2
All	1	7.5	0.13-34	15	0.25-68	50	5

[a]Configuration 2, converter follows reverberatory furnace, no roaster
Configuration 3, converter follows fluidized-bed roaster and reverberatory furnace.

[b]Control equipment: 0 signifies none operated
1, electrostatic precipitator

Table 4-2. Continued. EMISSIONS FROM REVERBERATORY FURNACES IN PRIMARY COPPER SMELTERS

B. Oxides of sulfur: SO_2, and SO_3 (as H_2SO_4), in kilograms per metric ton and pounds per ton of concentrate processed. No control equipment operated.

Smelter[a] Configuration	Pollutant	Emissions				No. of Tests	No. of Plants Tested
		kg/MT		lb/ton			
		Avg.	Range	Avg.	Range		
2	SO_2	115	25-310	230	50-620	19	3
2	SO_3	0.41	0-0.85	0.81	0-1.7	14	2
3	SO_2	33	19-55	66	38-110	7	1
3	SO_3	0.11	0-0.30	0.22	0-0.60	7	1
All	SO_2	110	19-310	220	38-620	26	4
All	SO_3	0.31	0-0.85	0.61	0-1.7	21	3

[a]See footnote a, Table 4-2A

C. Oxides of nitrogen (NO_x) as nitrogen dioxide (NO_2), kilograms per metric ton and pounds per ton of concentrate processed by smelter.
Smelter configuration 2: converter follows reverberatory furnace; no roaster. No control equipment operated.

Smelter Configuration	Emissions				No. of Tests	No. of Plants Tested
	kg/MT		lb/ton			
	Avg.	Range	Avg.	Range		
2	0.045	0.035-0.06	0.09	0.07-0.12	3	1

Table 4-3. COMBINED EMISSIONS FROM MULTIPLE-HEARTH ROASTERS AND REVERBERATORY FURNACES IN PRIMARY COPPER SMELTERS

A. Particulates, kilograms per metric ton and pounds per ton of concentrate processed by smelter.

Control Equipment	Emissions				No. of Tests	No. of Plants Tested
	kg/MT		lb/ton			
	Avg.	Range	Avg.	Range		
1	2.4	0.35-8.4	4.8	0.70-17	38	2
2	0.70	0.37-0.96	1.4	0.74-1.91	15	2

B. Oxides of sulfur: SO_2, and SO_3 (as H_2SO_4), in kilograms per metric ton and pounds per ton of concentrate processed. No control equipment operated.

Pollutant	Emissions				No. of Tests	No. of Plants Tested
	kg/MT		lb/ton			
	Avg.	Range	Avg.	Range		
SO_2	220	180-330	450	360-660	8	3
SO_3	0.75	-	1.5	-	1	1

organizations for use in this project. Since the majority of the tests were obtained from governmental agencies, they were primarily run for compliance determination purposes. As such, results were measured at points of emission to the atmosphere, after combining gas streams from various processes and after application of control systems.

The following specific comments apply to the information in the tables:

1. Converters

   - ESP control achieves an average control efficiency of 88 percent for particulates, while ESP's combined with the gas cleaning systems included in sulfuric acid plants yield 98 percent efficiency.
   - Particulate emissions can potentially be as high as 40 pounds per ton of concentrate and can be controlled to a level of 0.05 pounds per ton.
   - Particulate emissions from converters are potentially slightly larger in smelter configurations which include roasters.
   - SO_2 emissions are reduced by approximately 97.4 percent by single contact sulfuric acid plants, and by 99.9 percent by double contact plants.
   - Potential SO_2 emissions from converters are smaller in smelting configurations which include a roasting step.
   - Although only one test result was recorded for NO_x, it indicates that these emissions are very small.

2. Reverberatory Furnaces

   - No results were recorded for reverberatory furnaces which are operated in conjunction with a multiple-hearth roasting furnace. In all cases in this configuration, reverberatory furnace gases are combined with those of the roaster before exhausting the atmosphere (see Roaster/Reverb).
   - SO_2 emissions from the reverberatory furnace depend on smelter configuration, since roasting will remove a portion of the sulfur in the feed to the furnace. Listed

results show that these emissions are 4 times greater when no roasting is done as compared to the case where a fluid-bed roaster is used.

- SO_2 emissions from reverberatory furnaces alone are not controlled emissions shows only 60 percent collection efficiency for an average ESP.
- Potential NO_x emissions appear to be very small, based upon a limited number of tests.

3. Multiple-Hearth Roaster/Reverberatory Furnace Combined Stream

- As mentioned previously, test results in all of the smelters which operate multiple-hearth roasters and reverberatory furnaces were measured after the two exhaust streams had been combined and after the application of particulate control equipment.
- At present there are no SO_2 controls applied to these gases at U.S. smelters.
- Particulate emission factors for the combined stream cannot be analyzed into the component contributions. The reported emission factor with control by electrostatic precipitator seems inconsistent with the factor (Table 4-2) for the reverberatory furnace alone with similar control.

  One would expect the combined gases to have a higher particulate emission, but the figures indicate that the gases from the furnace alone have emissions almost 5 times greater. Both figures are based upon a comparable number of test results taken at a number of different plants. A possible explanation would be that the ESP's applied to the furnace gases were older, less efficient, or poorly maintained units.

Data items were also gathered for other emission points in the smelter, but were not sufficient to warrant tabulation. These data can be found in the background files (Ref. 20) for the following operations:

- Concentrate and Flux Preparation
- Multiple-Hearth Roasters
- Fluidized-Bed Roasters
- Electric-Arc Smelting Furnaces
- Fire-Refining Furnaces

Table 4-4 contains emission factor information which has been compiled from other data sources (Refs. 21 and 22).

4.3 EMISSION FACTORS FOR PARTICULATES FROM FURNACES USED IN SECONDARY COPPER SMELTING PROCESSES

Table 4-5 presents emission factors for particulates for secondary copper smelting sources.

The emission factors listed have been estimated from the results of source tests, or from rates of production and waste accumulation according to material-balance principles, or by other means which, in some instances, have not been identified.

Records available for inspection regarding these facilities were almost always fragmentary and unverifiable, and their interpretation in terms of emission factors therefore involved a substantial component of engineering judgment. Further, estimates regarding potential emissions from uncontrolled equipment have in some cases been estimated by applying a nominal emission control efficiency factor to the observed level of emissions from the control equipment.

Another problem was that in some of the reports of emissions tests, while it was evident that emissions measured were derived from two or more processes controlled by the same systems, it was not clear which units were being operated at the time of the test. Because of these and other difficulties, the emission factors presented can be given a rating no higher than average.

Where not otherwise specified, it is reasonable to assume that a major fraction of the particulate matter (50 percent or more) consists of oxides of heavy metals, commonly zinc, copper, lead, and tin. The detailed composition of the particulate matter is related to the composition of the material charged into the furnace; smelting of alloys containing zinc is especially likely to

Table 4-4. EMISSION FACTORS FOR SMELTER PROCESSES DERIVED FROM PUBLISHED LITERATURE

Process	Material Basis	Pollutant	Emission Factor kg/MT	lb/ton	Ref.
Ore Crushing	Ore	TSP	1	2	21
Roasting	Concentrate	TSP	23	45	1
	Copper	TSP	84	168	[illegible]
	Concentrate	SO_2	30	60	1
Reverberatory Furnace	Concentrate	TSP	10	20	1
	Copper	TSP	103	206	21
	Concentrate	SO_2	160	320	1
Converters	Concentrate	TSP	30	60	1
	Copper	TSP	120	235	21
	Concentrate	SO_2	435	870	1
Fire Refining	Concentrate	TSP	5	10	1
Materials Handling	Copper	TSP	5	10	21
Acid Manufacture (single-contact)	100% acid	TSP	0.6-3.7	1.2-7.4	1
		SO_2	14-35	27-70	1
		SO_2	19	38	22
(double-contact)		SO_2	2	4	1

Table 4-5. EMISSION FACTORS FOR PARTICULATE MATTER FROM FURNACES USED IN SECONDARY COPPER SMELTING AND ALLOYING PROCESSES

A. Cupolas

Type of Charge	Control[a] Equipment	Emissions kg/MT Avg.	kg/MT Range	lb/ton Avg.	lb/ton Range	No. of Units Tested	No. of Plants Tested
Scrap Copper	0	0.002	-	0.003	-	1	1
Insulated Copper Wire	0	120	-	230	-	1	1
Insulated Copper Wire	1	5	-	10	-	1	1
Scrap Copper and Brass	0	35	30-40	70	60-80	2	1
Scrap Copper and Brass	1	1.2	1.0-1.4	2.4	2.0-2.8	2	1

B. Reverberatory Furnaces

Type of Charge	Control Equipment	Emissions kg/MT Avg.	kg/MT Range	lb/ton Avg.	lb/ton Range	No. of Units Tested	No. of Plants Tested
Copper	0	2.6	0.4-15	5.1	0.8-30		12
Copper	2	0.2	0.1-0.3	0.4	0.2-0.6	2	2
Brass and Bronze	0	18	0.3-35	36	0.6-70	2	2
Brass and Bronze	2	1.3	0.03-2.5	2.6	0.05-5	2	2

[a]Control equipment: 0 signifies none operated
1 indicates electrostatic precipitator used
2 indicates baghouse filter systems

Table 4-5. Continued. EMISSION FACTORS FOR PARTICULATE MATTER AND ALLOYING FROM FURNACES USED IN SECONDARY COPPER SMELTING AND ALLOYING PROCESSES

C. Rotary Furnaces

Type of Charge	Control Equipment	Emissions				No. of Units Tested	No. of Plants Tested
		kg/MT		lb/ton			
		Avg.	Range	Avg.	Range		
Brass and Bronze	0	150	50-260	300	100-500	2	2
	1	7	3-10	13	6-19	3	3
Brass (Foundry)	0	5	-	10	-	1	1
	2	2.5	0.1-5	5	0.1-10	3	1

D. Crucible and Pot Furnaces

Type of Charge	Control Equipment	Emissions				No. of Units Tested	No. of Plants Tested
		kg/MT		lb/ton			
		Avg.	Range	Avg.	Range		
Brass and Bronze	0	11	1-20	21	2-40	17	13
	1	0.5	0.1-1	1	0.1-2	5	3

Table 4-5. Continued. EMISSION FACTORS FOR PARTICULATE MATTER AND ALLOYING FROM FURNACES USED IN SECONDARY COPPER SMELTING AND ALLOYING PROCESSES

E. Electric Arc Furnaces

Type of Charge	Control Equipment	Emissions				No. of Units Tested	No. of Plants Tested
		kg/MT		lb/ton			
		Avg.	Range	Avg.	Range		
Copper	0	2.5	1-4	5	2-8	3	2
	2	0.5	0.02-1.0	1	0.04-2	2	1
Brass and Bronze	0	5.5	2-9	11	4-18	3	2
	2	3	-	6	-	1	1

F. Electric Induction Furnaces

Type of Charge	Control Equipment	Emissions				No. of Units Tested	No. of Plants Tested
		kg/MT		lb/ton			
		Avg.	Range	Avg.	Range		
Copper	0	3.5	-	7	-	1	1
	2	0.25	-	0.5	-	1	1
Brass and Bronze	0	10	0.3-20	20	0.5-40		18
	2	0.35	0.01-0.65	0.7	0.01-1.3		6

produce large quantities of particulate matter which, in this case, contains a high proportion of zinc oxide.

Other circumstances which affect the rates of emission and the composition of the particulate matter are the type of furnace used, the operational procedures, the rate of heating and the temperature attained, the physical form of the materials fed to the furnace, and others. Available information is not sufficient to permit complete evaluation of the quantitative effects of these variables on emission rates. The emission factors listed in Table 4-5 below are, therefore, classified only with respect to the type of furnace involved and to whether the feed metal contains or does not contain zinc.

Types of furnaces encountered in secondary copper smelting are:

1. Cupola (or blast furnace)
2. Reverberatory
3. Rotary
4. Crucible (or pot)
5. Electric Arc
6. Induction (electric, high or low frequency)

The following sections discuss emission factors for furnaces of these types as indicated by emissions data and production data for both zinc-free and zinc-bearing feed metals. Where the information is available, PES reports emission factors both for actual and potential emissions, the latter corresponding to weights of material which would be emitted to the atmosphere if no emission control equipment were provided.

The following notes apply to the information shown in Table 4-5 for specific furnace types.

- Cupolas

  230 pounds per ton was estimated (by state personnel) for a smelting operation in which insulated copper wire was recycled. Presumably most of the particulate matter generated originated from the insulation materials and contained little copper oxide. An appropriate emission factor for copper oxide alone would be much smaller than 120 pounds per ton.

- Reverberatory Furnaces

  Of 12 facilities reviewed, only one indicated potential emissions larger than 10 pounds per ton.

- Rotary Furnaces

  The lower emission rates from control equipment at the foundries apparently reflect higher efficiency of control by baghouses, which were in use at some foundries, than by the equipment used at the smelters, which included scrubbers and electrostatic precipitators.

- Crucible and Pot Furnaces

  Constituents more volatile than copper included arsenic and cadmium in one case, beryllium in another. The largest factor for potential emissions occurred with a copper-arsenic alloy containing no zinc.

- Electric Arc Furnaces

  Products include refined copper (castings and shot) and various copper alloys, including bronze, tinsel bronze, beryllium copper, and high-temperature alloys containing cobalt, nickel, chromium, molybdenum, tungsten, and manganese. Beryllium emission factors appear to be about 0.002 kg/MT or 0.004 lb/short ton.

- Electric Induction Furnaces

  This table includes both high-frequency and low-frequency induction furnaces.

  Emission control was effected, in all cases cited, through the use of fabric collectors (or baghouses).

5.0 FUGITIVE EMISSIONS

5.1 INTRODUCTION

Both gaseous and particulate fugitive emissions arise from operations at primary copper smelters while those from secondary smelters are essentially limited to particulates. Generally, these emissions result from materials handling and storage, from process equipment and industrial exhaust from system leakage, and from unconfined operations such as furnace tapping and metal pouring. Problems of the respective industries are discussed below.

5.2 PRIMARY COPPER SMELTERS

5.2.1 POLLUTANTS

All the pollutants discharged from primary point sources, such as uncontrolled stacks, particulate control equipment, and acid plants, are also found as fugitive emissions. These include mechanically generated dusts from storage and transfer of ore concentrate, fluxes, and slag; metallurgical fumes from furnace operations, sulfur dioxide, and sulfur trioxide (also in form of acid fume). Table 5-1 lists many of the materials and compounds which are found as fugitive emissions.

These fugitive emissions are generally released at or near ground level and are difficult to quantify. The quantification is particularly difficult in the case of particulates because there is not good material-balance approach for estimating losses and almost no direct tests have been conducted. In the case of sulfur oxides, fugitive emissions have been estimated as the difference between the total sulfur charged to the smelting process and the total sulfur known to be collected as acid by product, discharged through stacks, and present in slag. The amount of fugitive sulfur-compound emission has been estimated by this technique to be approximately 6 percent of the total sulfur charged (Ref. 3).

Table 5-1. POSSIBLE FUGITIVE EMISSIONS FROM PRIMARY COPPER SMELTERS

Dusts

- Concentrates
- Ferric Oxide (Fe_2O_3)
- Magnetite (Fe_3O_4)
- Refractory Dust (Alumina, Magnesia)
- Slag
- Zinc Oxide (ZnO)
- Disturbed Soil

Fumes[a]

- Arsenic Trioxide (As_2O_3)[b]
- Antimony Trioxide (Sb_2O_3)[b]
- Lead Oxide (PbO)
- Zinc Oxide (ZnO)
- Sulfuric Acid Mist
- Sulfates

Gases

- Carbon Monoxide
- Sulfur Dioxide
- Nitrogen Oxides

---

[a]Small amounts of other elements and compounds such as mercury, selenium, chlorides, and fluorides may be present depending upon concentrate source.

[b]Generally will condense on waste heat boilers if present.

Sometimes, primary copper smelter fugitive emissions have been characterized as "ground smoke," because of the smoky appearance or opacity of the emissions. This appearance is likely due to the presence of small aerosols, in the 0.4-1.0 micrometer diameter size range, which are very effective in scattering visible light. Many metallurgical fumes are known to be in this size range. These fume particles are small in diameter because the metals or metal oxides of which they are composed are condensed from the vapor state.

Another mechanism of "ground smoke" formation is thought to involve the reaction of a small fraction of the fugitive sulfur dioxide emissions with atmospheric oxygen to form sulfur trioxide. As the trioxide is formed it combines rapidly with water vapor to form small aerosols. This combination takes place even at low relative humidities.

The submicron sized fugitive emissions are easily capable of being transported over long distances, while at least some of the mechanically generated dusts will settle rather rapidly.

5.2.2 SOURCES

Potential sources of fugitive emissions from primary copper smelters are listed herein:

- Roaster
  Hot calcine transfer points
- Reverberatory Furnace
  Matte tap holes
  Matte launders
  Slag tap holes
  Slag skim bays
  Slag launders
  Charging points
  View ports
  Brick work leaks

- Converters
  Converter mouth
  End joints
  Hood
- Miscellaneous
  Ladles (matte and slag)
  Matte and slag handling operations
  Leaking ducts, flues, and stacks
  Other leaking process equipment
  Holding and refining furnaces

The principal source of fugitive emissions from roasters is the process of removing hot solid calcine from the roaster. Both dust and residual sulfur dioxide can be released. When the process involves dumping the calcine into cars for transfer to the reverberatory furnace, as is the case with some multiple-hearth roasters, the sudden dissipation of kinetic energy as the calcine strikes the car causes the generation of a puff of dust and trapped gases. Emissions from leaks in the roaster can also be present; the losses from fluidized-bed roasters are generally smaller than those from multiple-hearth roasters because of differences in construction. Because internal pressures are higher in fluidized-bed roasters, leakage can become significant in a fluidized-bed roaster if leakage points exist.

Reverberatory furnaces produce molten matte from either "green" charge or calcine. Charging and tapping of the furnace for the matte both are carried out intermittently while melting continues. Even though the furnace operates at slightly less than atmospheric pressure (generally about -0.05 to -0.1 inch w.c.), the charging operation is conducted through openings in the furnace from which some dust, fume, and sulfur dioxide may escape.

Molten matte is removed from the furnace through tap holes which are normally plugged. During tapping these are opened and the

matte flows through channels called launders to ladles. Most furnaces have two or three matte tap holes on each side. Because the matte is still close to furnace temperature as it is removed, the remaining sulfur in the form of sulfides can continue to oxidize outside the furnace for a time, forming sulfur dioxide. Oxides of volatile metals may also be emitted from the launders and the ladle. As the ladle is transported to the converters, emissions can continue. These emissions produce the earlier-described ground smoke. The less dense slag which floats on top of the matte in the reverberatory furnace is also removed periodically through slag tap holes and launders. Some emissions result from this operation but they are not generally as intense as those from the matte.

Reverberatory furnaces are constructed of refractory bricks. Because of the need to allow room for thermal expansion, it is difficult to achieve a leakproof condition. Also, in the case of furnaces built with suspended roofs, a gap exists between the furnace walls and the roof which must be packed with a heat-resistant material. Any imperfections in this packing will result in leak points. The sealing problem is not as difficult with sprung-arch roof construction. Leaks may be sealed by spraying on a slurried refractory.

Fugitive emissions associated with copper converting generally result from ineffective capture of fumes and sulfur dioxide during certain phases of the converter operation. During blowing, the exhaust hood placed over each converter generally fits rather tightly and emissions are exhausted with little loss. The fit is not perfect, however, as there must be some gap between the hood and the opening to prevent freezing of the hood to the converter as a consequence of splashing of molten copper. A chain-curtain closure is sometimes used at the edge of the hood to minimize the opening while still providing

durability and flexibility. A metal skirt is sometimes used to improve the seal and minimize deterioration of the converter. In a properly designed system it is possible to collect nearly all the emissions during the "roll-in" and blowing phase.

Automatic damper controls are generally used to prevent excess dilution air from being drawn into the system while at the same time maintaining effective fume collection from most phases of converter operation. If the damper control point is improperly set or if the charge level in the converter is higher than normal, fugitive emissions can result.

When the converter is rolled out for pouring either slag or blister copper, the hood draft is usually shut off by dampers. The main reason for this is to maintain a higher concentration of sulfur dioxide in gases that are fed to the by-product acid plant (if such a plant is provided). When the dampers are closed the converter emissions are uncaptured and discharged directly to the atmosphere. The roll-out operational phase can amount to 3 to 6 hours out of every 24-hour period for each converter.

A variety of other fugitive emission sources can be present in a smelter, most of which involve leaks in waste heat boilers, heat exchangers, and flues and ducts. Another minor source of fugitive emissions is fire refining. The residual sulfur content of blister copper is only about 2 percent and any small amounts of impurities remain. Therefore, when final blowing is conducted the potential quantity of emissions is small. These furnaces are, therefore, not hooded and any emissions resulting from the operation can be classified as fugitive.

5.3 SECONDARY COPPER SMELTERS

Fugitive emissions from secondary copper smelters are generally limited to dusts, fumes, and smoke because the sulfur content of the

scrap charge is very low. As in the case of primary smelters, larger particulates classified as dust can be expected from materials handling and from furnace charging. Because these materials settle rather rapidly, the impact depends upon how well these operations are protected from the wind.

The other fugitive emissions result from uncaptured or uncontrolled contaminants generated by the furnaces. These include metal fumes (zinc and other volatile metal oxides) and smoke from oily or insulation-covered scrap. Most of these emissions arise during charging, slag removal, metal tapping or pouring, chage mixing, and air lancing. Because a wide variety of furnace types are used, hood design and effectiveness can vary substantially.

5.4 FUGITIVE EMISSION CONTROL

Fugitive emissions control techniques can be divided into two major categories: (1) process changes to eliminate or minimize generation of emissions, and (2) installation of equipment to collect the emissions. A requirement in either case is that process equipment and industrial ventilation be designed and maintained to control leakage.

In primary copper smelting, several types of process changes are possible. To reduce emissions while charging reverberatory furnaces, automatic control of furnace pressure could be incorporated. This could involve the installation of pressure transducers to produce a signal which would control dampers or fans to maintain the desired negative pressure. In the case of converters, techniques might be devised to reduce the time during which the converter opening is rolled out away from the hood opening. Fluidized-bed roasters could be substituted for multiple-hearth roasters.

Installation of additional or improved systems for collecting emissions would involve changes in some present industry practices.

At present most furnace operations are located in large buildings with some open sides and openings (monitors or other vents) in the roof. Installation of additional hoods and ventilation equipment could be complicated by existing support structures and cranes. On the other hand, reduction of emissions inside these buildings could improve the work environment.

The collection of fugitive emissions does not necessarily mean that all current discharge of fugitive emissions would be eliminated. The actual reduction of emissions would be influenced by the overall abatement plan for each source and applicable regulations. In the case of collected but uncontrolled emissions, it is still likely that ambient pollutant concentrations would be reduced because of the discharge through elevated stacks in place of ground level discharge.

Table 5-2 summarizes fugitive emission points, quantities emitted, and possible control techniques for primary copper smelting sources. While controls for secondary smelters have not been directly discussed in this section, many of the same techniques considered for primary smelters would be applicable.

Table 5-2. FUGITIVE EMISSION SOURCE, QUANTITY AND CONTROL

Fugitive Emission Source	Quantity Emitted	Control
Roaster Hot Calcine Transfer Points	Minor	Evacuated room-type enclosure
Roaster Leakage	Major (possibly)	Repair or replace
Furnace Matte Taps and Launders	Major	Evacuated room-type enclosure or separate evacuated hoods
Furnace Slag Taps, Launders, and Skim Bay	Significant but not as great as from matte	Separate evacuated hoods
Furnace Charging Points and Leaks	Major (possibly)	a. Pressure control systems to maintain negative pressure at all times b. Reduce firing rate during charging
Converter Mouth	Major	a. Separate hood and evacuation system b. Completely enclose converter with removable hood c. Feed cold materials through hood
Converter End Leakage	Major (possibly)	Repair
Ladles - Matte and Slag Handling	Major	Hoods at launder pouring points
Leakage at Ducts and Equipment	Major (possibly)	Continuous maintenance and repair

6.0 RECOMMENDATIONS FOR FURTHER SOURCE TESTING

Both the primary and secondary copper smelting industries involve a rather wide variety of processes and equipment types. In the case of primary copper smelting the sulfur content of the ore varies significantly. In the secondary smelting industry the nature and composition of scrap feed varies widely. An attempt was made to develop emission factors for the major processes and combinations of processes in these industries. Insufficient valid test data were available to cover all the possibilities of feed composition, nature of specific process or equipment, and type of air pollution; therefore accurate emission factors could not be developed for all these combinations. Many tests had been done, but often important data elements were missing, such as feed rate or composition. Another complication with primary smelters is that tests were performed on combined gas streams and not on streams from individual items of equipment.

Because of these difficulties, it was decided that emission factors for uncontrolled sulfur dioxide emissions should be based upon an average sulfur content in copper concentrate and on a distribution of this sulfur found in a large number of tests. The sulfur content used is specified so that corrections can be made where sulfur content differs and is known. However, there are only 15 primary copper smelters in the United States, each one having a different configuration. Therefore, these emission factors should probably not be used to estimate potential emissions from any given plant. (Latest data specific to the plant should be used instead.)

Emission factors for particulates and for controlled emissions must be based upon testing. As will be discussed in more detail in this section, it is obvious that a major program of testing smelter sources is needed if precision and accuracy of these factors is to be improved.

6.1 PRECISION OF EMISSION FACTORS

To formulate any program to supplement the existing tables of emission factors, it is important to examine the precision of the data in those tables. A system for examining precision has been promulgated by EPA. Called "Source Inventory and Emission Factor Analysis" (SIEFA), it is intended to provide estimates of the precision of all the elements of an emissions inventory, including, in particular, the emission factors which may be necessary in quantifying industrial emissions.

Tables 6-1 and 6-2 provide estimates of standard deviation and precision for the emission factors (presented in Section 4.0) for primary copper smelting processes. For particulate emissions, estimates of the precision of the emission factors range from 0.07 to 0.34; that is, the standard error of the emission factor is between 7 and 34 percent of the factor. (The standard error is equal to the standard deviation divided by the square root of the number of observations accepted.) For sulfur dioxide emission factors, precision estimates range from 0.09 to 0.78 - somewhat larger, on the whole, than those for particulates.

Considered solely in the light of these precision estimates, it may be reasonable to suggest that additional attention be directed toward those factors with precision poorer - i.e., larger - than 25 percent. These would include uncontrolled particulate emissions from converters in the configuration, reverberatory furnace followed by converter, and from reverberatory furnaces in another smelter configuration; also, sulfur dioxide emissions uncontrolled and from single-contact acid plants.

However, the precision of the emission factor is not usually the most important error-bearing item in determining the accuracy of emission estimates, since the precision is, basically, independent of accuracy. That is, an estimate can be quite precise

Table 6-1. SIEFA STANDARD DEVIATIONS AND PRECISION FACTORS FOR PRIMARY COPPER SMELTING PROCESSES (PARTICULATE EMISSIONS)

Process Unit	Smelter[a] Configuration	Control[b] Equipment	E.F. kg/MT	S.D. kg/MT	E.F. lb/ton	S.D. lb/ton	Estimated Precision
Converter	1	0	15	4.6	30	9.2	0.15
	2	0	8.5	5.8	17	11.5	0.34
	1	1	1.5	0.75	2.9	1.5	0.13
	1	2	0.19	0.11	0.38	0.22	0.22
	2	2	0.14	0.14	0.28	0.28	0.23
	3	2	0.55	0.13	0.11	0.25	0.13
Reverberatory Furnace	2	0	26	6.1	52	12.1	0.12
	2	1	11	6.9	22	13.7	0.11
	3	1	1.2	1.8	2.4	3.5	0.34
Combined Stream of Roaster and Reverberatory Furnace	1	1	2.4	1.7	4.8	3.3	0.11
	1	2	0.7	0.19	1.4	0.37	0.07

[a]Configuration 1, converter follows multiple-hearth roaster and reverberatory furnace
Configuration 2, converter follows reverberatory furnace, no roaster
Configuration 3, converter follows fluidized-bed roaster and reverberatory furnace

[b]Control equipment: 0 signifies none operated
1, electrostatic precipitator
2, electrostatic precipitator with acid plant particulate control

Table 6-2. SIEFA STANDARD DEVIATIONS AND PRECISION FACTORS FOR PRIMARY COPPER SMELTING PROCESSES (SULFUR DIOXIDE EMISSIONS)

Process Unit	Smelter[a] Configuration	Control[b] Equipment	E.F. kg/MT	S.D. kg/MT	E.F. lb/ton	S.D. lb/ton	Estimated Precision
Converter	1	0	350	-	700	-	0.25
	2	0	650	620	1,300	1,240	0.42
	1	1	31	33.7	61	67.4	0.78
	2	1	14	6.7	27	13.4	0.13
	1	2	0.31	0.14	0.62	0.28	0.23
Reverberatory Furnace	2	0	140	96	280	191	0.16
	3	0	33	13.3	66	26.6	0.15
Combined Stream of Roaster and Reverberatory Furnace	1	0	230	53	450	106	0.09

[a]Configuration 1, converter follows multiple-hearth roaster and reverberatory furnace
Configuration 2, converter follows reverberatory furnace, no roaster
Configuration 3, converter follows fluidized-bed roaster and reverberatory furnace

[b]Control equipment: 0 signifies none operated
1, single-contact acid plant
2, double-contact acid plant

and nevertheless wrong, because of errors and uncertainties not related to precision. In particular, with respect to sulfur emissions, a large and irreducible source of variation in uncontrolled emissions can be due to variations in the composition of the ore or other feed material. It follows that, for improved accuracy, sulfur emissions should be expressed in relation to composition of the feed. Although emissions from fuel-burning have long been routinely expressed in this manner, emissions from copper smelters have not been so expressed.

Unfortunately, the data made available to PES in this project were far too fragmentary to permit the utilization or even exploration of this approach. None of the data for this study were furnished directly by smelter firms. Nevertheless, it seems likely that some smelter companies may have obtained such data for their own use in private studies unrelated to air quality compliance testing. Tests conducted to verify control equipment efficiencies, for example, would be very valuable as a supplement to the existing data base.

Of interest as indicating a special need for new source tests is a recently discovered problem relating to sulfur compounds in the copper smelter stack gases and their relationship to the measurement of particulate matter. When compliance tests were performed on primary smelters in Arizona in late 1975 (Ref. 23), it was found that the EPA Method 5 test for determination of particulate matter suffered serious interference from sulfuric acid mist which condensed in the probe and filter holder or passed through the filter as a mist. Two questions arose from this circumstance. First, should this acid material be counted as particulate matter? This would depend on whether the material was in a gaseous form in the stack and was later condensed in the probe and filter or whether it was in the form of acid mist, which is considered particulate. Second, how can reproducibility in the use of Method 5 be assured?

With this volatile material condensing in the testing apparatus it was difficul · if not impossible, to secure reproducible test results.

A joint research program is being carried out by the Arizona Bureau of Air Quality Control [Ref. 24], the Magma Copper Company, and the Phelps Dodge Corporation to discover some method of testing which will separate, quantify, and identify the condensible and solid particulate matter.

6.2 RECOMMENDATIONS FOR ADDITIONAL TESTING

Based on scrutiny of the emission factors reported above, together with consideration of the estimated precision of those factors and the application of engineering judgment, it is recommended that the processes listed in Table 6-3 be studied. Particular attention should be given to the problem of determining potential uncontrolled emissions, i.e., the emissions which would enter the atmosphere if no control systems were in use. Table 6.2-1 also lists primary smelter plants which are known to operate the particular processes mentioned and which might, therefore, be considered as possible test sites.

Additional testing would also be desirable for secondary copper smelting and alloying plants. Because of the large number of plants in the United States the development of statistically valid average emission factors for various types of furnaces seems appropriate. The priority of this work will have to be determined in consideration of available resources and the impact of any improvement in factor accuracy that might result.

Determination of fugitive emissions represent yet another problem, regarding which little information is available. Because of the difficulty of measuring them, little effort has been made by the industry to quantify these emissions. Sulfur dioxide

Table 6-3. PRIMARY COPPER SMELTING PROCESSES FOR WHICH EMISSION FACTORS SHOULD BE DEVELOPED

Process	Pollutant to be Tested	Possible Test Sites
Concentrate and Flux Crushers	Particulates	Kennecott, Hayden, Arizona and others
Multiple-Hearth Roasters	Particulates and SO_2	1. ASARCO, Tacoma, Washington 2. ASARCO, Hayden, Arizona 3. ASARCO, El Paso, Texas 4. Phelps Dodge, Douglas, Arizona
Fluidized-Bed Roasters	Particulates and SO_2	1. Phelps Dodge, Morenci, Arizona 2. Kennecott, Hayden, Arizona 3. Anaconda, Anaconda, Montana 4. Cities Service, Copperhill, Tennessee
Electric-Arc Smelting Furnaces	Particulates and SO_2	1. Cities Service, Copperhill, Tennessee 2. Inspiration, Miami, Arizona
Flash Smelting Furnaces	Particulates and SO_2	Kennecott, Hurley, New Mexico
Anode Furnaces	Particulates	ASARCO, Tacoma, Washington, and others

fugitive emissions are usually estimated by a material balance. All measurable sulfur outputs are summed and compared to the total sulfur input, with the difference being assumed to represent fugitive emissions.

Three basic strategies can be considered for sampling of fugitive emission sources. These strategies, in order of decreasing probable accuracy, are:

1. Mock-up Stack: Emissions are captured in a temporary hood-duct-fan system and measured by essentially standard stack sampling methods.
2. Roof Monitor: Roof monitors and other vent openings in buildings containing fugitive emissions are evaluated with appropriate instrumentation to determine airflows and material balances through these openings.
3. Environmental Sampling: Outdoor air is monitored during prescribed meteorological conditions using a network of sampling sites upwind and downwind of the source to determine pollutant flux.

Of these three approaches, the first is preferred from an engineering standpoint because it offers the most direct and verifiable accounting for the effluents to be measured. At the same time, it requires the highest degree of cooperation and assistance from the smelter operating staff and causes the greatest difficulties in avoiding interference with normal process operations. Sampling at roof monitors is less direct and more difficult, but involves less interference with plant operations. Outdoor sampling is typically a last-resort measure, which would only be attempted if it were necessary to estimate emissions from a plant to which no access could be obtained; very low accuracy would be expected from this technique.

7.0 REFERENCES

1. Compilation of A' . Pollutant Emission Factors, Second Edition, Third Printing. ..S. Environmental Protection Agency, Research Triangle Park, N.C. Publication No. AP-42. February 1976.

2. Engineering Support Manual for NEDS Users, in preparation by U.S. Environmental Protection Agency.

3. Background Information for New Source Performance Standards: Primary Copper, Zinc, and Lead Smelters, Volume 1: Proposed Standards. U.S. Environmental Protection Agency, Research Triangle Park. Publication No. EPA-450/2-74-002a. October 1974.

4. Air Pollution Control Field Operations Manual, Volume III. Final Report for EPA Contract No. CPA 70-122. February 1972.

5. Billings, Carl H. First Annual Report on Arizona Copper Smelter Pollution Control Technology. Arizona Department of Health Services. April 1977.

6. Biswas, A.K. and W.G. Davenport. Extractive Metallurgy of Copper. Pergamon Press, Oxford, 1976.

7. Control of Sulfur Dioxide Emissions in Copper, Lead, and Zinc Smelting. U.S. Bureau of Mines, Washington, D.C. Information Circular 8527. 1971.

8. Field Surveillance and Enforcement Guide for Primary Metallurgical Industries. U.S. Environmental Protection Agency, Research Triangle Park. Publication No. EPA-450/3-73-002. December 1973.

9. Guides for Compiling a Comprehensive Emission Inventory. U.S. Environmental Protection Agency, Research Triangle Park. Publication No. APTD-1135. March 1973.

10. Oglesby, Sabert, Jr., et al. A Manual of Electrostatic Precipitator Technology, Part II, Application Areas. Final Report for National Air Pollution Control Administration Contract No. CPA 22-69-73.

11. Yannopoulos, J.C. and J.C. Agarwal (ed). Extractive Metallurgy of Copper, Volume I: Pyrometallurgy and Electrolytic Refining, and Volume II: Hydrometallurgy and Electrowinning. The Metallurgical Society of AIME, New York, New York. 1976.

12. Air Pollution Aspects of Brass and Bronze Smelting and Refining Industry. Brass and Bronze Ingot Institute and National Air Pollution Control Administration. PB 190295. November 1969.

13. Air Pollution Engineering Manual, Second Edition. EPA Publication No. AP-40. May 1973.

14. Development Document for Proposed Effluent Limitations Guidelines and New Source Performance Standards for the Secondary Copper Subcategory of the Copper Segment of the Nonferrous Metals Manufacturing Point Source Category. U.S. Environmental Protection Agency, Office of Water and Hazardous Materials, Effluent Guidelines Division, Washington, D.C. November 1974.

15. Lauber, D.W. Conley, and D. Barshield. Air Pollution Control of Aluminum and Copper Recycling Processes. Pollution Engineering, p. 23-26. December 1973.

16. Restriction of Emission, Copper-Scrap Smelting Plants and Copper Refineries, VDI Richtlinien, Verein Deutscher Ingenieure, VDI Kommission Reinhaltung der Luft, VDI Handbuch Reinhaltung der Luft, VDI 2102, October 1966. Translated from German and published with permission for the National Air Pollution Control Administration, U.S. Department of Health, Education and Welfare, Public Health Service, through the National Science Foundation, Washington, D.C., by the Israel Program for Scientific Translations.

17. Burson, W.R., and F.B. Morgan III. Recovery and Utilization of Copper Scrap in the Manufacture of High Quality Cathode. Proceedings of the Fourth Mineral Waste Utilization Symposium (jointly sponsored by the U.S. Bureau of Mines and IIT, Research Institute; held in Chicago, Illinois on May 7-8, 1974.)

18. Multimedia Environmental Assessment of the Secondary Nonferrous Metal Industry, Volume II. Industry Profile. Final Draft. Radian Corporation, Austin, Texas. Prepared for the U.S. Environmental Protection Agency, Industrial and Environmental Research Laboratory, Cincinnati, Ohio under Contract No. 68-02-1319. June 21, 1976.

19. Source Test Data System (SOTDAT), National Air Data Branch, Monitoring and Data Analysis Division, U.S. Environmental Protection Agency, Research Triangle Park, N.C., August 1973.

20. Background files to be submitted to National Air Data Branch, Monitoring and Data Analysis Division, U.S. Environmental Protection Agency, Research Triangle Park, North Carolina 27711, under Contract No. 68-02-1890.

21. Private communication with G. Sallee on Particulate Pollutant System Study. Midwest Research Institute, Kansas City, Mo. Prepared for National Air Pollution Control Administration under Contract No. 22-69-104. June 1970.

22. Atmospheric Emissions from Sulfuric Acid Manufacturing Processes, National Air Pollution Control Administration, Public Health Service, U.S. Department of Health, Education and Welfare; Publication No. 999-13, Washington, D.C. 1966.

23. Weisenberg, I.J., and G.E. Umlauf. Evaluation of the Controllability of SO_2 Emissions from Copper Smelters in the State of Arizona. Pacific Environmental Services, Inc., Final Report for EPA Contract No. 68-02-1354 Task Order No. 8, Santa Monica, California, June 1975.

24. Personal communication with Carl H. Billings, Arizona State Department of Health, Phoenix, Arizona.

APPENDIX A

SECTION 7.3
PRIMARY COPPER SMELTING

Prepared by

PACIFIC ENVIRONMENTAL SERVICES, INC.

EPA Contract No. 68-02-1890

Task Order No. 3

Project Officer: Arch A. McQueen

Prepared for

ENVIRONMENTAL PROTECTION AGENCY
National Air Data Branch
Research Triangle Park, North Carolina

Pacific Environmental Services, INC.

CORPORATE AND ENGINEERING 1930 14th Street Santa Monica, California 90404 Telephone (213) 393-9449

MIDWEST OPERATIONS Suite 228N 2625 Butterfield Road Oak Brook, Illinois 60521 Telephone (312) 325-5586

7.3 PRIMARY COPPER SMELTING

7.3.1 Process Description

Pyrometallurgical smelting methods are utilized extensively in the United States to produce copper from sulfide ores. These ores usually contain less than 1-percent copper when mined and therefore must be concentrated before being transported to the smelter. Concentration to 15- to 35-percent copper is accomplished by crushing, grinding, and flotation operations at the mine site. Sulfur content of the concentrate is generally 25 to 35 percent. Most of the remaining concentrate is iron (25 percent) and water (10 percent). Some concentrates also contain significant quantities of arsenic, cadmium, lead, boron, antimony, and other heavy metals.

The most common configuration of operations for pyrometallurgical smelters in the United States includes roasting, reverberatory or electric furnace smelting, and converting to produce blister copper (99+ percent pure copper) from concentrate. The remaining impurities are usually removed by fire refining and electrolytic refining. A generalized flowsheet for this combination of operations is illustrated in Figure 7.3-1. About half of the smelters in the United States do not use the roasting step and instead feed wet or "green" charge directly to the smelting furnace.

In roasting, concentrate is heated in air, eliminating 20 to 50 percent of the sulfur as SO_2. Relatively volatile impurities such as antimony, arsenic, and bismuth are also driven off, and some of the iron is converted to oxides which combine with slag in ensuing processes. Concentrate is mixed with a siliceous

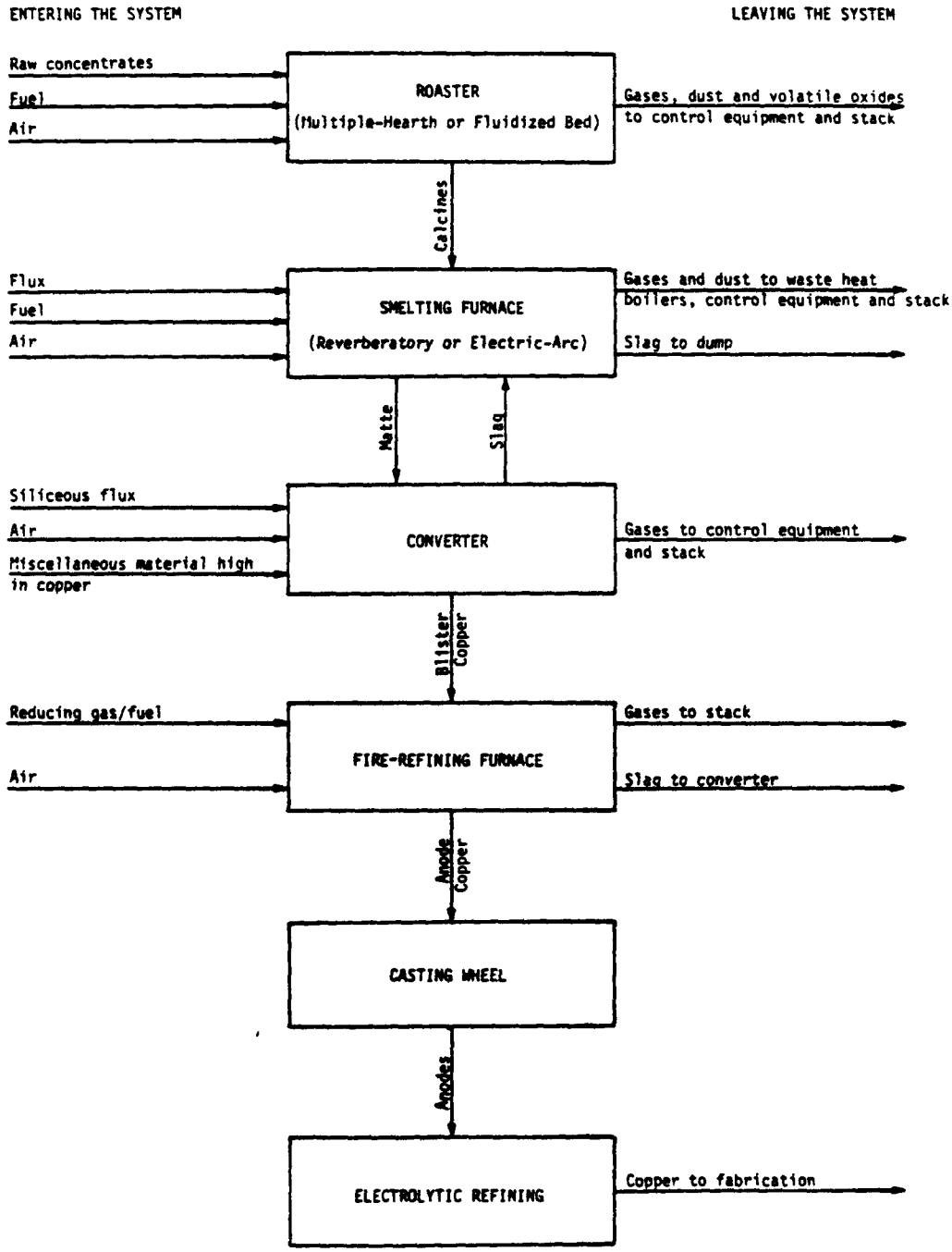

Figure 7.3-1. Typical Primary Copper Smelter Flowsheet

flux (often a low-grade ore) to produce the roaster charge material. The roasted product, called calcine, serves as a dried and preheated charge for the smelting furnace. Either multiple-hearth or fluidized-bed roaster furnaces are used for roasting copper concentrate. Because there is less air dilution, higher SO_2 concentrations are present in fluidized-bed roaster gases than in multiple-hearth roaster gases.

The second step is smelting. In this process, hot calcines from the roaster, or raw, unroasted concentrate are fused with limestone and siliceous flux, in reverberatory or electric-arc furnaces, to produce copper matte. Copper matte is primarily miscible liquid sulfides and some heavy metals. In reverberatory furnace operation, heat is supplied by combustion of oil, gas, or pulverized coal, and is reflected from the roof of the furnace onto the charge. As the charge is melted, copper, iron, and sulfur form cuprous sulfide (Cu_2S) and ferrous sulfide (FeS). Other minerals combine with fluxes forming slag. Slag floats on top of the molten bath and is removed continuously. Copper matte remains in the furnace until poured. Normal smelting furnace operations produce a matte which contains 40- to 45-percent copper.

For smelting in electric-arc furnaces, heat is generated by an electric current passing through carbon electrodes which are lowered into the slag layer of the molten bath. Electric furnaces do not produce fuel combustion gases, therefore, gas flow rates are lower and SO_2 concentrations are higher in electric furnace effluent streams than those in reverberatory furnace gases.

The final step in the production of blister copper is converting. Converting is normally performed in Peirce-Smith converters. The converter consists of a cylindrical steel shell. The shell is mounted on trunnions at either end and rotated about its major axis. An opening in one side of the converter functions

as a mouth through which molten matte, siliceous flux, and scrap copper are charged to the converter and gaseous products are vented. Air or oxygen-enriched air is blown through the metal; FeS is oxidized and combined with the flux to form a slag which floats on the surface. Relatively pure Cu_2S (called "white metal") is collected in the bottom of the converter. After removal of slag, a renewed air blast oxidizes the sulfide sulfur to SO_2 leaving blister copper in the converter.

Hoboken converters have recently been installed at one U.S. smelter to replace the standard Peirce-Smith converters. The metallurgical operations of the Hoboken unit are the same as those of the Peirce-Smith unit. However, to prevent dilution air from entering the exhaust gas stream, the Hoboken converter is fitted with a stationary side flue instead of a movable hood.

In a newer process, roasting and smelting are combined in one operation to produce a high-grade copper matte from concentrates and fluxes, using a flash furnace. Fuel is supplied to sustain combustion reactions, but most of the heat necessary for smelting is generated autogenously by the oxidation of the sulfides in the concentrate.

The flash smelting operation has also been applied to the oxidation of matte to blister copper in the continuous smelting process. Continuous smelting systems which have been operated at foreign smelters include the Noranda, WORCRA, Mitsubishi, and TBRC (top-blown rotary converter) processes.

Blister copper usually contains from 98.5- to 99.5-percent pure copper. Impurities may include gold, silver, antimony, arsenic, bismuth, iron, lead, nickel, selenium, sulfur, tellurium, and zinc. To further purify the blister copper, fire refining and electrolytic refining are used. In fire refining, air is blown through the metal to oxidize remaining impurities; these

are removed as a slag, and the remaining metal bath is subjected to a reducing at phere to reconvert cuprous oxide to copper. The fire-refined copper is cast into anodes and further refined electrolytically.

Electrolytic refining involves separation of copper from impurities by electrolysis in a solution containing copper sulfate and sulfuric acid. Metallic impurities precipitate from the solution and form a sludge which is removed and treated for recovery of precious metals. The copper produced is 99.95- to 99.97-percent pure.

Hydrometallurgical processes are usually applied to recovery of copper from oxide ores, but their application in U.S. plants is limited.

7.3.2 Emissions and Controls

Particulates and sulfur dioxide are the principal air contaminants emitted at primary smelters. In some cases, these emissions are generated directly as a result of the processes involved, as in the liberation of sulfur from the ore as SO_2 emissions, or the volatilization of trace elements to oxide fumes. Significant quantities of fugitive emissions are generated from material handling operations and during the charging and tapping of furnaces. Actual quantities of emissions from a particular smelter unit depend upon the configuration of equipment in the smelting plant and the operating parameters employed. Table 7.3-1 summarizes the emission factors for the major units for various smelter configurations. Other potential emission sources, which have not been quantified, include ore crushing and preparation, flux crushing, ore storage, concentrate drying, slag dumping, fire refining, and copper casting.

Table 7.3-1. EMISSION FACTORS FOR PRIMARY COPPER SMELTERS[a,d]

Smelter configuration	Unit	Control[b]	Particulates[c]		SO_2[c]		SO_3 (as H_2SO_4)[c]		NO_x(as NO_2)[c]	
			lb/ton	kg/MT	lb/ton	kg/MT	lb/ton	kg/MT	lb/ton	kg/MT
Reverberatory furnace followed by converters	Reverb.	None	36	18	390	195	0.81	0.41	0.09	0.045
		ESP	22	11						
	Converter	None	42	21	860	430	-		0.05	0.025
		ESP	2.5	1.3			-			
		ESP + SCAP	0.28	0.14	27	14	0.06	0.03		
Multiple-hearth roaster followed by reverberatory furnace and converters	Roaster	None	45	22.5	410	205	-		-	
		Baghouse	0.2	0.1	-		-		-	
	Roaster and reverb.[e]	None	-		450	230	1.5	0.75	-	
		ESP	4.8	2.4					-	
		Spray Chamber + ESP	1.4	0.7					-	
	Converter	None	42	21	540	270	-		-	
		ESP	2.9	1.5			-		-	
		ESP + SCAP	0.38	0.19	61	31	0.14	0.07	-	
		ESP +	0.38	0.19	0.62	0.31	-		-	
Fluidized-bed roaster followed by reverberatory furnace and converters	Reverb.	ESP	2.4	1.2	66	33	0.22	0.11	-	
	Roaster	None	55	28	540	270	-		-	
		Baghouse + SCAP	0.1	0.5	2	1	-		-	
	Converter	ESP + SCAP	1.1	0.55	-		-		-	
Fluidized-bed roaster followed by electric furnace and converters	Roaster	None	55	28	540	270	-		-	
		Baghouse + SCAP	0.1	0.05	2	1	-		-	
	Electric furnace	None	-		131	66	-		-	
	Converter	None	-		444	72	-		-	
Total uncontrolled smelter		None	135	66.5	1,254	627	-		-	

[a]Emission factors are expressed as units per unit weight of concentrated ore processed by the smelter. Approximately 4 unit weights of concentrate are required to produce 1 unit weight of copper metal.

[b]ESP = electrostatic precipitator
SCAP = single contact acid plant
DCAP = double contact acid plant

[c]References 2, 4, 5, 6, 7, and 9. Additional information was furnished by the following agencies:
Arizona Department of Health Services, Phoenix, Arizona
Montana State Department of Health and Environmental Sciences, Helena, Montana
Puget Sound Air Pollution Control District, Seattle, Washington
New Mexico Environmental Improvement Agency, Santa Fe, New Mexico

[d]Ore storage, crushing and handling; flux crushing and handling; concentrate drying and handling; slag dumping; fire refinery and copper casting are potential emission sources but emission rates have not been quantified.

[e]Roaster and reverberatory furnace emissions are combined and therefore a single set of emission factors is provided.

Multiple-hearth and fluidized-bed roasters are sources of both particulates and sulfur oxides. Particulates consist of oxides of the metals which are found in the concentrate. Copper and iron oxides are the primary constituents, but other oxides such as those of arsenic, antimony, cadmium, lead, mercury, and zinc may also be present with metallic sulfates and sulfuric acid. Combustion products from fuel burning also contribute to the particulate emissions from multiple-hearth roasters. It is standard practice in the industry to control particulates from roaster gases because of the recovery value of the copper in the dust and because of the presence of toxic particulates such as arsenic. Cyclones and scrubbers may be used for coarse particulate removal and are usually followed by electrostatic precipitators (ESP's) or fabric filters for collection of fines.

Smelting furnaces also emit significant quantities of oxidized metal particulates and SO_2. Particulate collection systems for smelting furnaces are similar to those used for roasters. Reverberatory furnace offgases are usually routed through low-velocity balloon flues and waste heat boilers to recover large particles and heat, then routed through electrostatic precipitators. Overall collection efficiencies of 95 to 99 percent for ESP systems are normal for these applications. Efficiencies as high as 99.7 percent have been reported.

Converter flue gases also contain particulates and SO_2. In the standard Peirce-Smith converter, flue gases are captured during the blowing phase by movable hooding which covers the converter mouth opening. To prevent freezing of the hood to the converter (caused by splashing of molten metal), there is a gap between the hood and the vessel. Sophisticated draft control devices have been developed which maintain a negative pressure at the gap to draw air in for cooling and to prevent fugitive

emissions. During charging and pouring operations, significant fugitive emissions may occur when the hooding is removed to allow crane access.

Remaining smelter processes handle material which contains very little sulfur. Hence, SO_2 emissions from these processes are relatively insignificant. Particulate emissions from fire-refining operations, however, may still be of concern. Electrolytic refining does not produce emissions unless the associated sulfuric acid tanks are open to the atmosphere. Crushing and grinding systems used in ore, flux, and slag processing also contribute to fugitive dust problems.

Control of SO_2 emissions from smelter sources is most commonly performed in a single or double-contact sulfuric acid manufacturing plant. Use of a sulfuric acid plant on copper smelter effluent gas streams requires that gas be free from particulate matter and that a certain minimum SO_2 concentration be maintained. Table 7.3-2 shows typical average SO_2 concentrations for the various smelter unit offgases. These offgas streams may be treated individually, or weak and strong concentration streams may be blended. Typically, single-contact acid plants achieve 96.5- to 97-percent conversion of SO_2 to acid with approximately 2,000 parts per million (ppm) of SO_2 remaining in the acid plant effluent gas. Double-contact acid plants collect 98 percent of the SO_2 and emit about 500 ppm SO_2. Absorption of the SO_2 in dimethylaniline (DMA) solution has also been used in U.S. smelters for production of liquid SO_2.

Emissions from hydrometallurgical smelting plants are generally small in quantity and easily controlled. In the Arbiter process, ammonia gas escapes from leach reactors, mixer-settlers, thickeners, and tanks. For control, all of these units are covered and vented to a packed-tower scrubber which recovers the ammonia and recycles it.

Table 7.3-2. AVERAGE SO_2 CONCENTRATIONS IN OFFGASES FROM PRIMARY COPPER SMELTING SOURCES

Unit	$\%SO_2$
Multiple-Hearth Roaster	1.5-3
Fluidized-Bed Roaster	10-12
Reverberatory Furnace	0.5-1.5
Electric-Arc Furnace	4-8
Flash-Smelting Furnace	10-20
Continuous Smelting Furnace	5-15
Peirce-Smith Converter	4-7
Hoboken Converter	8
Single Contact H_2SO_4 Plant	0.2
Double Contact H_2SO_4 Plant	0.05

No control practices are currently utilized in U.S. smelters for NO_x, CO, or hydrocarbon emissions, which are found in the offgas streams from units requiring fuel combustion. Multiple-hearth roasters, reverberatory furnaces, converters, and refining furnaces are sources of these contaminants. Data are available for assigning emission factors for NO_x emissions from reverberatory furnaces and converters in only one smelter configuration (Table 7.3-1). Data for assigning emission factors for CO and hydrocarbons are unavailable.

References for Section 7.3

1. Air Pollution Engineering Manual. Air Pollution Control District, County of Los Angeles. U.S. DHEW, Public Health Service. PHS Publication No. 999-AP-40. 1967.

2. Weisenberg, I.J. and Umlauf, G.E. Evaluation of the Controllability of SO_2 Emissions from Copper Smelters in the State of Arizona. Final Report for EPA Contract No. 68-02-1354, Task Order No. 8. June 1975.

3. Field Surveillance and Enforcement Guide for Primary Metallurgical Industries. U.S. Environmental Protection Agency, Research Triangle Park. Publication No. EPA-450/3-73-002. December 1973.

4. Background Information for New Source Performance Standards: Primary Copper, Zinc and Lead Smelters, Volume 1: Proposed Standards. U.S. Environmental Protection Agency, Research Triangle Park. Publication No. EPA-450/2-74-002a. October 1974.

5. Billings, Carl H. First Annual Report on Arizona Copper Smelter Pollution Control Technology. Arizona Department of Health Services. April 1977.

6. Compilation of Air Pollution Emission Factors. Second Edition, Third Printing. U.S. Environmental Protection Agency, Research Triangle Park. Publication No. AP-42. February 1976.

7. Control of Sulfur Dioxide Emissions in Copper, Lead, and Zinc Smelting. U.S. Bureau of Mines, Washington, D.C., Information Circular 8527. 1971.

8. Yannopoulos, J.C. and Agarwal, J.C. (ed). Extraction Metallurgy of Copper, Volume I: Pyrometallurgy and Electrolytic Refining, and Volume II: Hydrometallurgy and Electrowinning. The Metallurgical Society of AIME, New York, New York. 1976.

9. Atmospheric Emissions from Sulfuric Acid Manufacturing Processes. U.S. DHEW. NAPCA Publication No. 999-13. 1966.

APPENDIX B

SECTION 7.9

SECONDARY COPPER SMELTING AND ALLOYING

Prepared by

PACIFIC ENVIRONMENTAL SERVICES, INC.

EPA Contract No. 68-02-1890

Task Order No. 3

Project Officer: Arch A. McQueen

Prepared for

ENVIRONMENTAL PROTECTION AGENCY
National Air Data Branch
Research Triangle Park, North Carolina

Pacific Environmental Services, INC.

CORPORATE AND ENGINEERING 1930 14th Street Santa Monica, California 90404 Telephone (213) 393-9449

MIDWEST OPERATIONS Suite 228N 2625 Butterfield Road Oak Brook, Illinois 60521 Telephone (312) 325-5586

7.9 SECONDARY COPPER SMELTING AND ALLOYING

7.9.1 Process Description

The secondary copper industry processes scrap metals for the recovery of copper. Products include refined copper or copper alloys in forms such as ingots, wirebar, anodes, and shot. Copper alloys are combinations of copper with other materials, notably, tin, zinc, and lead. Also, for special applications, combinations include such metals as cobalt, manganese, iron, nickel, cadmium, and beryllium and nonmetals such as arsenic and silicon.

The principal processes involved in copper recovery are scrap metal pretreatment and smelting. Pretreatment includes cleaning and concentration processes necessary to prepare the material for the smelting furnace. Smelting involves heating and treating the scrap to achieve separation and purification of specific metals.

The feed material used in the recovery process can be any metallic scrap containing a useful amount of copper, bronze (copper and tin), or brass (copper and zinc). Traditional forms are punchings, turnings and borings, defective or surplus goods, metallurgical residues such as slags, skimmings, and drosses, and obsolete, worn out, or damaged articles including automobile radiators, pipe, wire, bushings and bearings.

The type and quality of the feed material determines the processes the smelter will use. Due to the large variety of possible feed materials available, the method of operation varies greatly between plants. Generally, a secondary copper facility deals with less pure raw materials and produces a more refined product, whereas brass and bronze alloys processors take cleaner scrap and do less purification and refining. A flowsheet depicting the major processes that can be expected in a secondary copper

smelting operation is shown in Figure 7.9-1. A brass and bronze alloying operation is shown in Figure 7.9-2.

Pretreatment of the feed material can be accomplished using several different procedures, either separately or in combination. Feed scrap is concentrated by manual and mechanical methods such as sorting, stripping, shredding, and magnetic separation. Feed scrap is sometimes briquetted in a hydraulic press. Pyrometallurgical pretreatment may include sweating, burning of insulation (especially from wire scrap), and drying (burning off oil and volatiles) in rotary kilns. Hydrometallurgical methods include flotation and leaching, with chemical recovery.

In smelting, low-grade scrap is melted in a cupola furnace, producing "black copper" (70- to 80-percent Cu) and slag; these are often separated in a reverberatory furnace, from which the melt is transferred to a converter or electric furnace to produce "blister" copper which is 90- to 99-percent Cu.

Blister copper may be poured to produce shot or castings, but is often further refined electrolytically or by fire refining. The fire-refining process is essentially the same as that described in the primary copper smelting industry (refer to Section 7.3.1). sequence of events in fire-refining is (1) charging; (2) melting in an oxidizing atmosphere; (3) skimming the slag; (4) blowing with air or oxygen; (5) adding fluxes; (6) "poling" or otherwise providing a reducing atmosphere; (7) reskimming; and (8) pouring.

To produce bronze or brass rather than copper, an alloying operation is required. Clean, selected bronze and brass scrap is charged to a melting furnace with alloys to bring the resulting mixture to the desired final composition. Fluxes are added to remove impurities and to protect the melt against oxidation by air. Air or oxygen may be blown through the melt to adjust the composition by oxidizing excess zinc.

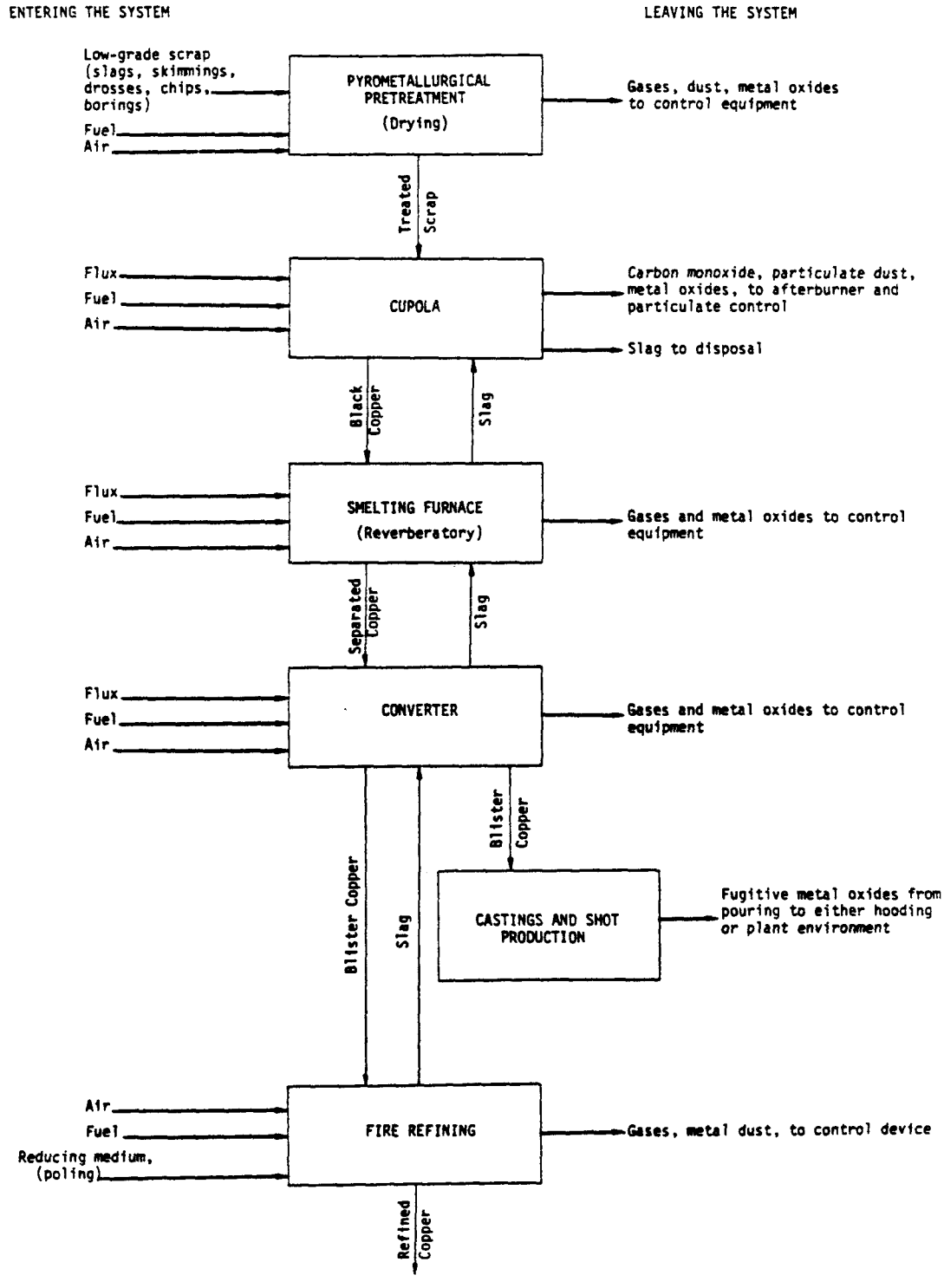

Figure 7.9-1. Low-Grade Copper Recovery

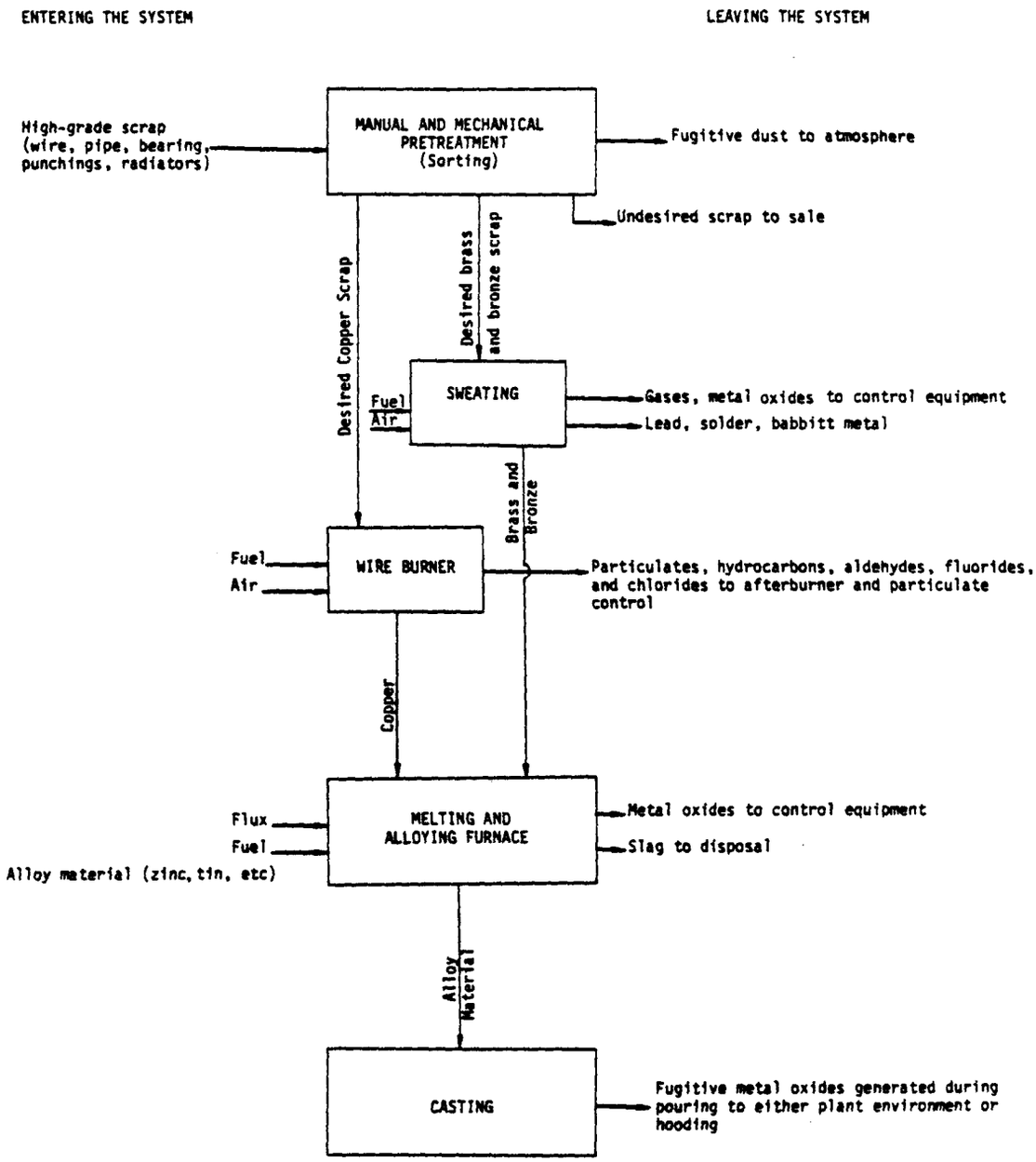

Figure 7.9-2. High-Grade Brass and Bronze Alloying

With zinc-rich feed such as brass, the zinc oxide concentration in the exhaust gas is sometimes high enough to make recovery for its m· ·: value desirable. This process is accomplished by vaporizing the zinc from the melt at high temperature and capturing the oxide downstream in a process baghouse.

The final step is always casting of the suitably alloyed or refined metal into a desired form. This form may be shot, wirebar, anodes, cathodes, ingots, or other cast shapes. The metal from the melt is usually poured into a ladle or a small pot, which serves the functions of a surge hopper and a flow regulator, then into a mold.

7.9.2 Emissions and Controls

The principal pollutants emitted from secondary copper smelting activities are particulate matter in various forms. Removal of insulation from wire by burning causes particulate emissions of metal oxides and unburned insulation. Drying of chips and borings to remove excess oils and cutting fluids can cause discharges of large amounts of dense smoke consisting of soot and unburned hydrocarbons. Particulate emissions from the top of a cupola furnace consist of metal oxide fumes, dirt, and dust from limestone and coke.

The smelting process utilizes large volumes of air to oxidize sulfides, zinc, and other undesirable constituents of the feed. This procedure generates much particulate matter in the exit gas stream. The wide variation among furnace types, charge types, quality, extent of pretreatment, and size of charge is reflected in a broad spectrum of particle sizes and variable grain loadings in the escaping gases. One major factor contributing to differences in emission rates is the amount of zinc present in scrap feed materials; the low-boiling zinc evaporates and combines with air oxygen to give copious fumes of zinc oxide.

Metal oxide fumes from furnaces used in secondary smelters have been controlled by baghouses, electrostatic precipitators, or wet scrubbers. Efficiency of control by baghouses may be better than 99 percent, but cooling systems are needed to prevent the hot exhaust gases from damaging or destroying the bag filters. A two-stage system employing both water jacketing and radiant cooling is common. Electrostatic precipitators are not as well suited to this application, having a low collection efficiency for dense particulates such as oxides of lead and zinc. Wet scrubber installations are also relatively ineffective in the secondary copper industry. Scrubbers are useful mainly for particles larger than 1 micron, but the metal oxide fumes generated are generally submicron in size.

Particulate emissions associated with drying kilns can be similarly controlled. Drying temperatures up to 150°C (300°F) produce relatively cool exhaust gases, requiring no precooling for control by baghouses.

Wire burning generates much particulate matter, largely unburned combustibles. These emissions can be effectively controlled by direct-flame afterburners, with an efficiency of 90 percent or better if the afterburner combustion temperature is maintained above 1,000°C (1,800°F). If the insulation contains chlorinated organics such as polyvinyl chloride, hydrogen chloride gas will be generated and will not be controlled by the afterburner.

One source of fugitive emissions in secondary smelter operations is charging of scrap into furnaces containing molten metals. This often occurs when the scrap being processed is not sufficiently compact to allow a full charge to fit into the furnace prior to heating. The introduction of additional material onto the liquid metal surface produces significant amounts of volatile and combustible materials and smoke which can escape through the charging

door. Briquetting the charge offers a possible means of avoiding the necessity of such fractional charges. When fractional charging cannot be eliminated, fugitive emissions are reduced by turning off the furnace burners during charging. This reduces the flow of exhaust gases and enhances the ability of the exhaust control system to handle the emissions.

Metal oxide fumes are generated not only during melting, but also during pouring of the molten metal into the molds. Other dusts may be generated by the charcoal, or other lining, used in association with the mold. Covering the metal surface with ground charcoal is a method used to make "smooth-top" ingots. This process creates a shower of sparks, releasing emissions into the plant environment at the vicinity of the furnace top and the molds being filled.

Emission factor averages and ranges for six different types of furnaces are presented in Table 7.9-1.

Table 7.9-1. EMISSION FACTORS FOR PARTICULATE MATTER AND ALLOYING FROM FURNACES USED IN SECONDARY COPPER SMELTING AND ALLOYING PROCESSES[a]

A. Cupolas

Type of charge	Control[b] equipment	Emissions				No. of units tested	No. of plants tested
		Avg (kg/MT)	Range (kg/MT)	Avg (lb/ton)	Range (lb/ton)		
Scrap copper	0	0.002	-	0.003	-	1	1
Insulated copper wire	0	120	-	230	-	1	1
Insulated copper wire	1	5	-	10	-	1	1
Scrap copper and brass	0	35	30-40	70	60-80	2	1
Scrap copper and brass	1	1.2	1.0-1.4	2.4	2.0-2.8	2	1

B. Reverberatory Furnaces

Type of charge	Control[b] equipment	Emissions				No. of units tested	No. of plants tested
		Avg (kg/MT)	Range (kg/MT)	Avg (lb/ton)	Range (lb/ton)		
Copper	0	2.6	0.4-15	5.1	0.8-30		12
Copper	2	0.2	0.1-0.3	0.4	0.3-0.6	2	2
Brass and bronze	0	18	0.3-35	36	0.6-70	2	2
Brass and bronze	2	1.3	0.3-2.5	2.6	0.05-5	2	2

[a]All factors given in terms of raw materials charged to unit.

[b]Control equipment: 0 signifies none operated
1 indicates electrostatic precipitator used
2 indicates baghouse filter system

Table 7.9-1. EMISSION FACTORS FOR PARTICULATE MATTER AND ALLOYING FROM FURNACES USED IN SECONDARY COPPER SMELTING AND ALLOYING PROCESSES (CONTINUED)[a]

C. Rotary Furnaces

Type of charge	Control[b] equipment	Emissions				No. of units tested	No. of plants tested
		Avg (kg/MT)	Range (kg/MT)	Avg (lb/ton)	Range (lb/ton)		
Brass and bronze	0	150	50-250	300	100-500	2	2
	1	7	3-10	13	6-19	3	3

D. Crucible and Pot Furnaces

Type of charge	Control[b] equipment	Emissions				No. of units tested	No. of plants tested
		Avg (kg/MT)	Range (kg/MT)	Avg (lb/ton)	Range (lb/ton)		
Brass and bronze	0	11	1-20	21	2-40	17	13
	1	0.5	0.1-1	1	0.1-2	5	3

[a]All factors given in terms of raw materials charged to unit.

[b]Control equipment: 0 signifies none operated
1 indicates electrostatic precipitator used
2 indicates baghouse filter system

Table 7.9-1. EMISSION FACTORS FOR PARTICULATE MATTER AND ALLOYING FROM FURNACES USED IN SECONDARY COPPER SMELTING AND ALLOYING PROCESSES (CONCLUDED)[a]

E. Electric Arc Furnaces

Type of charge	Control[b] equipment	Emissions				No. of units tested	No. of plants tested
		Avg (kg/MT)	Range (kg/MT)	Avg (lb/ton)	Range (lb/ton)		
Copper	0	2.5	1-4	5	2-8	3	2
	2	0.5	0.02-1.0	1	0.04-2	2	1
Brass and bronze	0	5.5	2-9	11	4-18	3	2
	2	3	-	6	-	1	1

F. Electric Induction Furnaces

Type of charge	Control[b] equipment	Emissions				No. of units tested	No. of plants tested
		Avg (kg/MT)	Range (kg/MT)	Avg (lb/ton)	Range (lb/ton)		
Copper	0	3.5	-	7	-	1	1
	2	0.25	-	0.5	-	1	1
Brass and bronze	0	10	0.3-20	20	0.5-40	-	18
	2	0.35	0.01-0.65	0.7	0.01-1.3	-	6

[a]All factors given in terms of raw materials charged to unit.

[b]Control equipment: 0 signifies none operated
1 indicates electrostatic precipitator used
2 indicates baghouse filter system

Additional footnotes to Table 7.9-1.

[b]The information fc . able 7.9-1 was based on unpublished data furnished by the following:

Philadelphia Air Management Services, Philadelphia, Pennsylvania

New Jersey Department of Environmental Protection, Trenton, New Jersey

New Jersey Department of Environmental Protection, Metro field office, Springfield, New Jersey

New Jersey Department of Environmental Protection, Newark field office, Newark, New Jersey

New York State Department of Environmental Conservation, New York, New York

The City of New York Department of Air Resources, New York, New York

Cook County Department of Environmental Control, Maywood, Illinois

Wayne County Department of Health, Air Pollution Control Division, Detroit, Michigan

City of Cleveland Department of Public Health and Welfare, Division of Air Pollution Control, Cleveland, Ohio

State of Ohio Environmental Protection Agency, Columbus, Ohio

City of Chicago Department of Environmental Control, Chicago, Illinois

South Coast Air Quality Management District, Los Angeles, California

References for Section 7.9

1. Air Pollution Aspects of Brass and Bronze Smelting and Refining Industry. U.S. DHEW, PHS, EHS, National Air Pollution Control Administration, Raleigh, N.C. Publication No. AP-58. November 1969.

2. Air Pollution Engineering Manual. Air Pollution Control District, County of Los Angeles. U.S. DHEW, Public Health Service. PHS Publication No. 999-AP-40. 1967.

APPENDIX C

PRIMARY COPPER SMELTING PROCESS COMPENDIUM

Prepared by
PACIFIC ENVIRONMENTAL SERVICES, INC.

EPA Contract No. 68-02-1890
Task Order No. 3

Project Officer: Arch A. McQueen

Prepared for
ENVIRONMENTAL PROTECTION AGENCY
National Air Data Branch
Research Triangle Park, North Carolina

Pacific Environmental Services, INC.

CORPORATE AND ENGINEERING 1930 14th Street Santa Monica, California 90404 Telephone (213) 393-9449
MIDWEST OPERATIONS Suite 228N 2625 Butterfield Road Oak Brook, Illinois 60521 Telephone (312) 325-5586

TABLE OF CONTENTS

Section	Page
PRIMARY COPPER SMELTING	1
PROCESS DESCRIPTION	1
PYROMETALLURGICAL SMELTING	1
Raw Materials	3
Feed Preparation	3
Roasting	5
Smelting	7
Converting	10
Refining	13
Fire Refining	13
Electrolytic Refining	13
New Processes	14
Flash Smelting	14
Continuous Smelting	15
HYDROMETALLURGICAL SMELTING	15
EMISSIONS	18
PYROMETALLURGICAL SMELTING	18
Emissions From Bedding Plants	18
Roaster Emissions	18
Emissions From Smelting Furnaces	19
Converter Emissions	20
Other Sources	20
HYDROMETALLURGICAL SMELTING	22
CONTROL PRACTICES	22
CODING NEDS FORMS	25
CODING EIS/P&R FORMS	39
GLOSSARY	40
REFERENCES	42

LIST OF ILLUSTRATIONS

Figure		Page
1	Composite Flow Diagram for Pyrometallurgical Smelting and Refining in the Primary Copper Industry	2
2	Multiple-Hearth Roaster	6
3	Fluidized-Bed Processing	8
4	Copper Converter	11
5	Copper Converter Operation	12
6	Outokumpu Flash Smelting Furnace	16
7	Noranda Continuous Smelting	17
8	Fluctuations in Converter Off-Gas Volume and Sulfur Dioxide Concentrations	21
9	Standard NEDS Form for Primary Copper Smelting: Multiple-Hearth Roaster	26
10	Standard NEDS Form for Primary Copper Smelting: Fluidized-Bed Roaster	27
11	Standard NEDS Form for Primary Copper Smelting: Concentrate Dryer	28
12	Standard NEDS Form for Primary Copper Smelting: Reverberatory Smelting Furnace Without Roaster	29
13	Standard NEDS Form for Primary Copper Smelting: Reverberatory Smelting Furnace With Roaster	30
14	Standard NEDS Form for Primary Copper Smelting: Electric Smelting Furnace	31
15	Standard NEDS Form for Primary Copper Smelting: Converter Furnace Without Roaster	32
16	Standard NEDS Form for Primary Copper Smelting: Converter Furnace With Roaster	33
17	Standard NEDS Form for Primary Copper Smelting: Fire-Refining Furnace	34
18	Standard NEDS Form for Primary Copper Smelting: Electrolytic Refining	35
19	Standard NEDS Form for Primary Copper Smelting: Flash Smelting Furnace	36
20	Standard NEDS Form for Primary Copper Smelting: Continuous Smelting Furnace	37

LIST OF TABLES

Table		Page
1	Common Copper-Bearing Minerals	4
2	IPP Codes for SIC Number 3331 (Primary Copper Smelting)	38

PRIMARY COPPER SMELTING

PROCESS DESCRIPTION

PYROMETALLURGICAL SMELTING

Pyrometallurgical smelting is a process for recovering metal from ore by techniques involving heating to very high temperatures. As applied to the production of copper, pyrometallurgical techniques are commonly employed in smelting sulfide ores which, when oxidized by air, furnish much heat because of the conversion of their component sulfur to sulfur dioxide.

The most common configuration for pyrometallurgical smelters in the United States comprises four distinct high-temperature techniques: (1) roasting, in which a concentrated ore is heated with fluxes to eliminate some sulfur and produce a calcine suitable for smelting; (2) smelting proper, in which the calcine is heated to produce a liquid matte containing sulfides of copper and iron; (3) converting, in which the matte reacts with oxygen forming iron oxide, sulfur dioxide, and a nearly pure product known as blister copper; and (4) fire refining, in which blister copper is melted, partially oxidized, then reduced, generating a still purer product. Newer processes combine some of these steps. The final purification, when required, is done by electrolytic refining.

A composite illustration of the roasting, reverberatory or electric furnace smelting, and converting configuration options for pyrometallurgical smelting is shown in Figure 1.

Concentrated ore can be fed directly to a reverberatory smelting furnace, or the smelting step may be preceded by roasting. In some installations, the concentrate is dried (without roasting) before being fed to the reverberatory furnace. Green (undried, unroasted) concentrate may be fed to a reverberatory smelter, but not to an electric smelting furnace.

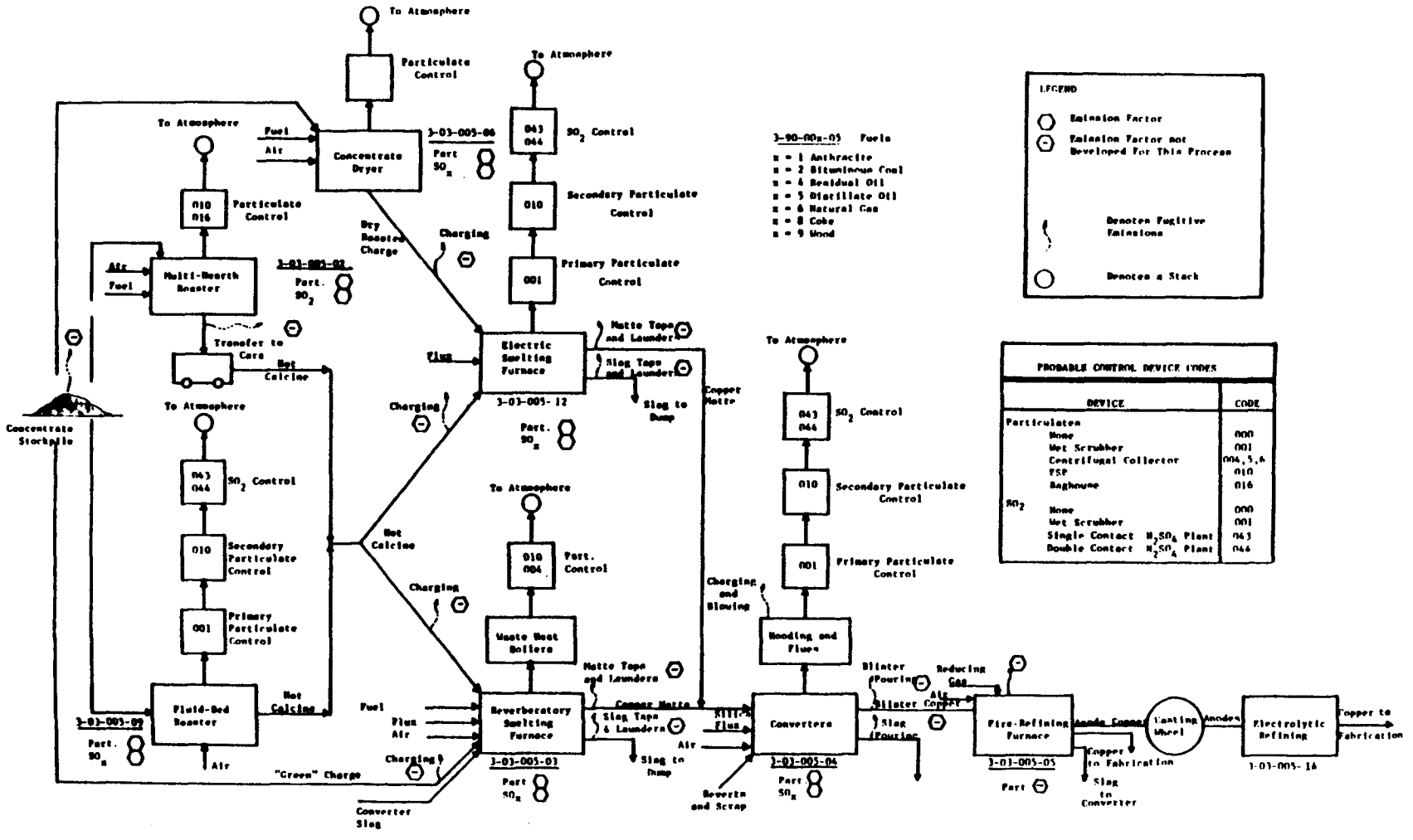

Figure 1. Composite Flow Diagram for Pyrometallurgical Smelting and Refining in the Primary Copper Industry

Raw Materials

The bulk of the world's copper ore reserves are found as either copper sulfides, copper oxides, or native copper. The most widely used ores in pyrometallurgical smelting are the sulfides such as chalcopyrite ($CuFeS_2$) and bornite (Cu_5FeS_4). These ores usually contain less than 1-percent copper when mined and therefore must be concentrated before being transported to the smelter. Concentration to 15- to 35-percent copper is accomplished by crushing, grinding, and flotation operations at the mine site. Oxide ores also may contain less than 1-percent pure copper, but can be processed in hydrometallurgical leaching operations and are generally not concentrated. Table 1 shows the sulfide and oxide minerals from which copper is extracted.

Due to the availability of sulfide ores, pyrometallurgical smelting has been utilized extensively in this country for many years. To a certain extent, the choice of smelting equipment used for the recovery of copper from ores is influenced by the chemical composition of the concentrate feed. For example, a high sulfur content in the concentrate usually dictates the use of a roasting stage for partial sulfur removal prior to charging to a smelting furnace. As mentioned previously, concentrate material can vary over a wide range of copper contents. Sulfur percentages can also vary between 25 to 35 percent for concentrate materials. The remainder of the material is composed, for the most part, of iron (~25 percent) and water (10 percent). Some concentrates also contain significant quantities of arsenic, cadmium, lead, boron, antimony, and other heavy metals.

Feed Preparation

Concentrate material arriving at the smelter is mixed with a flux material in a bedding plant. The flux is usually made of low-grade siliceous ore, sand, and gravel. The bedding plant consists of several pads of concrete where an overhead crane is used to deposit proper quantities of concentrate and flux. The material is then mixed by a front-end loader to produce the roaster charge.

Table 1. COMMON COPPER-BEARING MINERALS

Mineral	Theoretical formula	Cu(%)	S(%)
Chalcopyrite	$CuFeS_2$	34.5	34.9
Chalcocite	Cu_2S	79.8	20.2
Bornite	Cu_5FeS_4	63.6	25.6
Covellite	CuS	66.5	33.5
Malachite	$CuCO_3 - Cu(OH)_2$	57.3	0
Azurite	$2CuCO_3 - Cu(OH)_2$	55.1	0
Cuprite	Cu_2O	88.8	0
Chrysocolla	$CuSiO_3 - 2H_2O$	36.2	0

Roasting

Roasting is the heating of concentrated ores to produce partially oxidized calcines. In this process, the charge is heated in air; sulfide sulfur combines with oxygen to form sulfur oxides; and some sulfide metals from metal oxides. In the typical roaster-furnace-converter smelter, roasting eliminates 20 to 50 percent of the sulfur in the charge. Roasting can, however, be used to eliminate all the sulfur ("dead" roasting) or only a very small percentage of the sulfur. The amount removed depends on the volume of air supplied to the process per unit of charge and the roasting temperature. Roasting also serves to dry and preheat the product (called "calcine") before charging to the smelting furnace. During roasting, a portion of the iron in the charge is converted to ferric oxide (Fe_2O_3), in which form it will be removed in the slag from the smelting furnace. Some of the iron will also be oxidized to magnetite (Fe_3O_4) which can lead to problems in the smelting furnace, such as slags of high copper content, reduced smelting rate, and furnace bottom buildup. If any impurities such as arsenic, antimony, or bismuth are present in the ore, they will be volatilized in the roasting step. These factors, with the added costs of operating a roaster, must be considered at each smelter when deciding whether to utilize a roasting step or to feed a wet or "green" concentrate directly to the smelting furnace.

The multiple-hearth furnace is commonly used for roasting. This is a cylindrical, brick-lined vessel divided from top to bottom by horizontal brick hearths. Feed is dropped into the top drying hearth near the central shaft and is moved outward on the hearth by rotating rabble arms until it is dropped to the hearths below. Air and auxiliary fuel are added as needed at various levels of the furnace. Temperatures range from 400°F in the top hearths to 1,400°F at the bottom level where the hot calcine product is removed (see Figure 2).

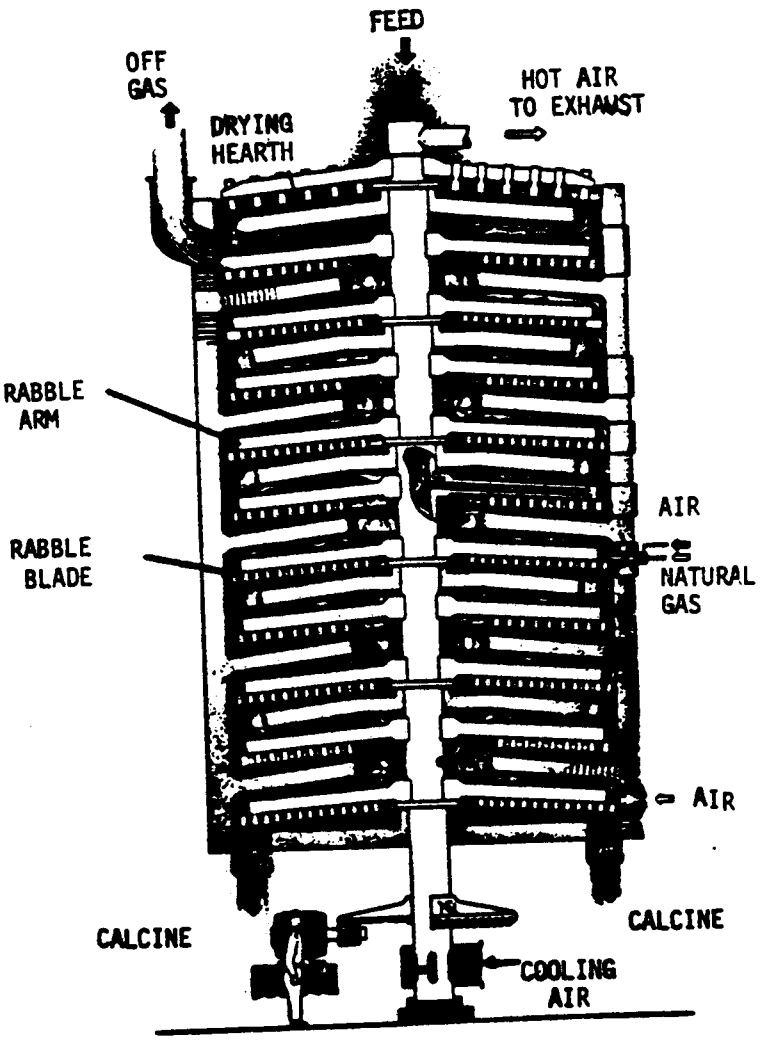

Figure 2. Multiple-Hearth Roaster

A more recent development in roaster technology has produced the fluidized-bed roaster. The fluidized-bed roasting process is characterized by a gas-solid reaction in a dense suspension of solids maintained in a turbulent mass by the upward flow of gases that affect the reaction. The roaster is essentially a cylindrical refractory lined steel shell used to contain the suspended solids, Figure 3.

Air is forced into the roaster through tuyeres in a refractory lined steel constriction plate that is placed at the bottom of the shell. The two best known types of fluidized-bed roasters, the Lurgi and the Dorr-Oliver, are characterized by different tuyere design.

Reaction rates in fluidized-bed roasting are rapid, and industrial copper smelters treat in the order of 15 to 50 tons of concentrate per square meter of hearth area per day. An important consequence of the high reaction rates is the high efficiency of oxygen utilization by the roasting reactions. This leads to an air requirement only slightly in excess of stoichometric and it results in high SO_2 concentrations in the effluent roaster gases.

Roasting is not applicable to blast furnace, flash, or single-step smelting, all of which incorporate the roasting reactions (and their heats of oxidation) in the smelting step.

Smelting

Smelting in the furnace is the next process in a typical pyrometallurgical facility. Smelting is the heating of calcines accompanied by a chemical change resulting in the formation of liquid metallic sulfides, termed matte. Most of the plants in the United States use reverberatory furnaces for this step. Hot calcine or raw unroasted concentrate is charged to hoppers with siliceous or limestone flux and dropped into the furnace through

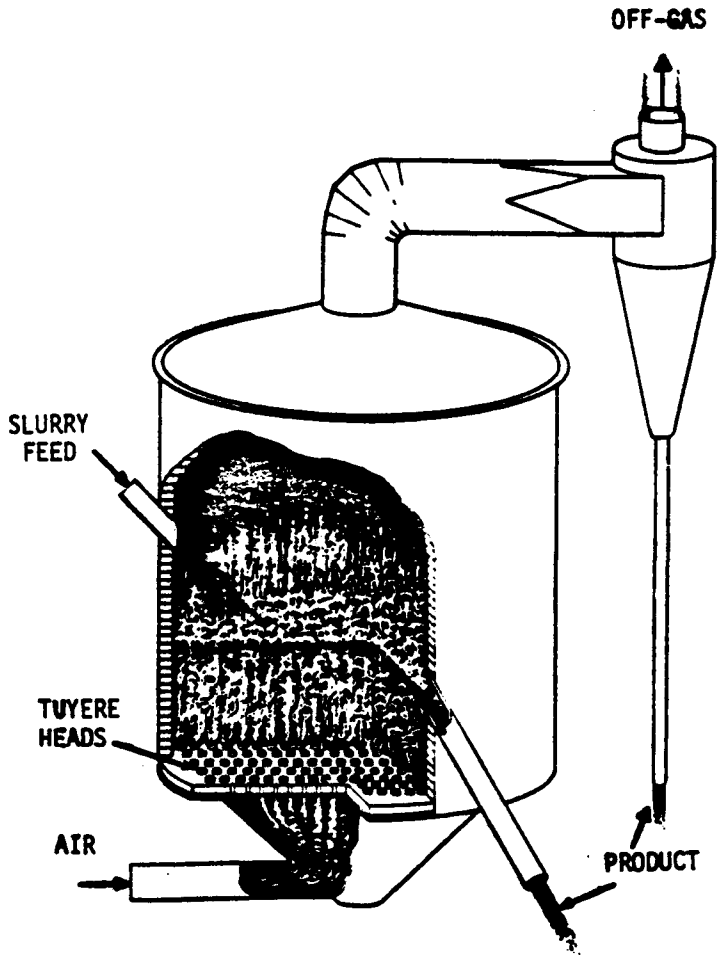

Figure 3. Fluidized-Bed Processing

staggered holes in the roof. Heat is supplied by combustion of oil, gas, or pulverized coal and is reflected from the roof of the furnace onto the charge. About 4-million Btu are required per ton of hot calcine. Although reverberatory furnaces have low thermal efficiencies, almost all are equipped with waste heat boilers to recover approximately 50 percent of the heat as superheated steam.

The principal purpose of the smelting operation using the reverberatory furnace is the separation of minerals such as iron, aluminum, calcium, and magnesium from the copper to produce the copper "matte." This is accomplished by combining the copper and iron which are present in the charge with sulfur to form cuprous sulfide (Cu_2S) and ferrous sulfide (FeS). These two sulfides are miscible in the molten state and make up 95 percent of the copper matte which is produced. Heavy metals can also be present in the matte layer. Gangue minerals are removed as complex ferrous silicates. These silicates contain dissolved small amounts of the basic oxides (Al_2O_3, CaO, MgO). A slag material is formed which floats on top of the molten bath and is removed continuously into slag pots. Copper matte is tapped intermittently from tap holes near the bottom of the furnace and is conveyed in a molten condition to the converters. Mattes containing 40- to 45-percent copper are generally best for efficient converter operation.

Some plants use an electric-arc smelting technique as an alternative to the reverberatory furnace. The feed to the electric furnace may or may not be roasted, but must at least be dried to prevent explosions due to rapid expansion of steam. Heat is generated in the furnace by an electric current passed through carbon electrodes in the slag layer of the molten bath within the furnace, smelting the new charge which covers the bath. As the copper concentrates and fluxes are smelted, they settle into the bath, form slag and matte layers, and are tapped.

Converting

The final step in the production of blister copper is converting. This process is normally performed in Peirce-Smith converters. The converter consists of a cylindrical steel shell. The shell is mounted on trunnions at either end and rotated about its major axis. An opening in one side of the converter functions as a mouth through which molten matte is charged and gaseous products are vented. Blowing air is supplied through a header along the back of the converter, from which a horizontal row of tuyere pipes extend into the interior of the vessel. (See Figure 4.) Typically, several of these vessels are maintained at a facility with each converter running through a 9- to 12-hour cycle per batch.

The copper converting cycle consists of two phases. In the first phase, molten matte, highly siliceous ore flux, and scrap copper are charged to the converter. The vessel is rotated until the tuyeres are covered and a hood is lowered over the converter opening. Air or oxygen-enriched air is blown through the tuyeres into the metal. During the early stages of this first blowing period, FeS is oxidized and combined with the siliceous flux. A slag is formed which floats on the surface. Relatively pure Cu_2S (called "white metal") is collected in the bottom of the converter. At intervals, the operator discontinues blowing and skims slag from the unit. A series of "slag blows" may be performed until sufficient white metal is accumulated so that the tuyeres are covered when the converter is rotated into position for the "copper blow." At that point, the air blast is again started and the white metal is oxidized to blister copper. A typical cycle for a Peirce-Smith converter showing the copper operation is diagrammed in Figure 5.

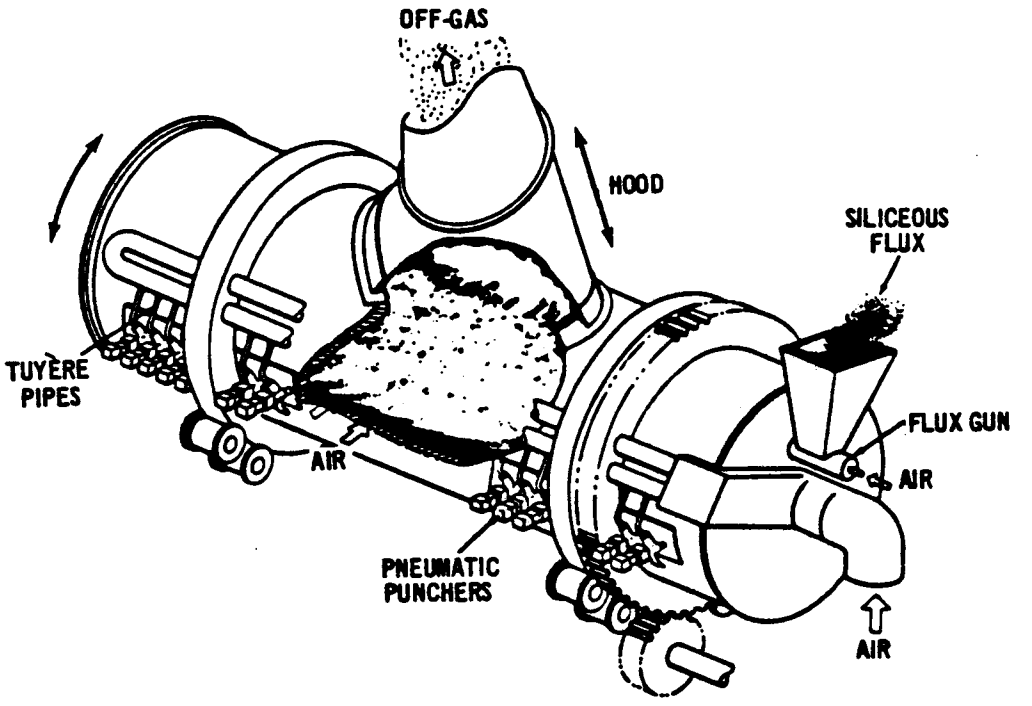

Figure 4. Copper Converter

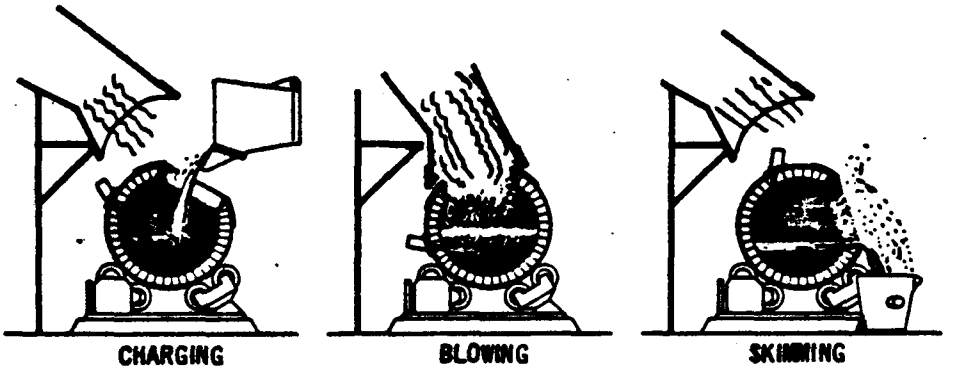

Figure 5. Copper Converter Operation

Hoboken converters have recently been installed at a U.S. smelter to replace the standard Peirce-Smith converters. The metallurgical operations of the Hoboken unit are the same as those of the Peirce-Smith: copper matte is charged to the unit; air is blown through matte; slag is removed; and blister copper is produced. However, to prevent dilution air from entering the exhaust gas stream, the Hoboken converter is fitted with a stationary side flue and with rotating seals instead of a movable hood.

Refining

Blister copper usually contains from 98.5- to 99.5-percent copper. Impurities which may occur in blister copper include gold, silver, antimony, arsenic, bismuth, iron, lead, nickel, selenium, sulfur, tellurium, and zinc. To further purify the blister copper, fire refining and electrolytic refining are used.

Fire Refining

A fire-refining furnace can be of the reverberatory or cylindrical converter type. In a cylindrical furnace, air is first blown through the metal to oxidize all of the impurities and a portion of the copper. When the copper oxide content reaches about 1 percent, blowing is stopped, and a slag layer is skimmed off the unit. The metal bath is then subjected to a reducing atmosphere either by fuel-rich combustion of pulverized coal, oil or gas, or by poling. In poling, green logs are forced into the metal bath, and are destructively distilled. However, this process is not common in modern smelters. The resulting atmosphere in the furnace causes the reduction of the cuprous oxide to copper.

The fire-refined copper still may contain small quantities of gold, silver, and other impurities. These impurities may have value, if recovered, and also reduce the strength, electrical

conductivity, and ductility of the copper. For chemical manufacturing purposes, such as the production of copper sulfate for agricultural use, fire-refined copper may be used without further processing. However, for most applications, including metallurgical, the fire-refined copper is cast into anodes and is further treated by electrolytic refining.

Electrolytic Refining

Electrolytic refining involves separation of copper from impurities by electrolysis. Fire-refined anodes are immersed in a solution bath containing copper sulfate and sulfuric acid. Metallic impurities precipitate from the solution and form a sludge which is removed and treated for recovery of precious metals. Cathode copper (99.95- to 99.97-percent pure) is removed from the remelted and made into bars, ingots, or slabs for marketing purposes.

New Processes

The sequence of operations described previously is utilized in most copper smelting installations in the United States. In part, because of air pollution control regulations, new processes have been developed to be used in primary smelting. These areas of new technology include flash smelting furnaces and continuous smelting units.

Flash Smelting

Flash furnace smelting combines the operations of roasting and smelting to produce a high-grade copper matte from concentrates and flux. Charge material must be fine-grained and essentially "bone-dry" to ensure an even and homogeneous distribution as it is injected into the furnace and mixed with preheated (up to 930°F)

air or oxygen. Oil is supplied to the furnace to sustain flash combustion reactions, but most of the smelting heat is generated autogenously by the oxidation of the sulfides in the concentrate. This heat smelts the particles as they fall through the reaction section into a settler section where molten matte is separated from slag. Since high-grade mattes are normally produced (50- to 60-percent Cu), flash smelter slag is also high in copper and must be treated for metal recovery. This is normally accomplished by flotation. Use of flash smelting furnaces also requires modifications to the operations of the converters to accommodate the higher grade matte. Figure 6 shows a typical flash smelting furnace.

Continuous Smelting

Continuous pyrometallurgical smelting processes have been developed and implemented at foreign smelters but have not as yet been utilized in U.S. plants. Processes which have been developed include Noranda, WORCRA, Mitsubishi, and TBRC (top-blown rotary converter) smelting. Basically, these operations combine the flash-smelting principal of autogenous smelting with an additional step of injecting gas to oxidize the copper matte to blister copper in the same vessel. The Noranda continuous smelting process is illustrated in Figure 7.

HYDROMETALLURGICAL SMELTING

Hydrometallurgical processes have been successfully applied to the recovery of copper from oxide ores. These involve leaching of copper from ore into a solution which is then purified and treated to recover the copper. Processes have also been developed to recover copper from sulfide ores using hydrometallurgical techniques, but their application in U.S. plants has been limited. One such system, the Arbiter process, utilizes an anhydrous ammonia leaching reaction, followed by organic solvent extraction and electrowinning to produce high purity copper cathodes.

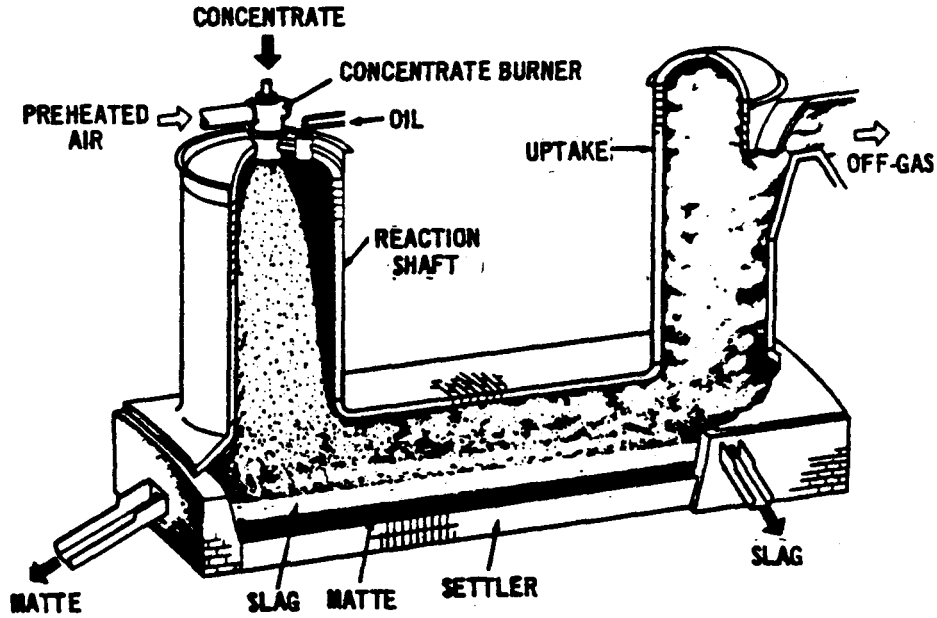

Figure 6. Outokumpu Flash Smelting Furnace

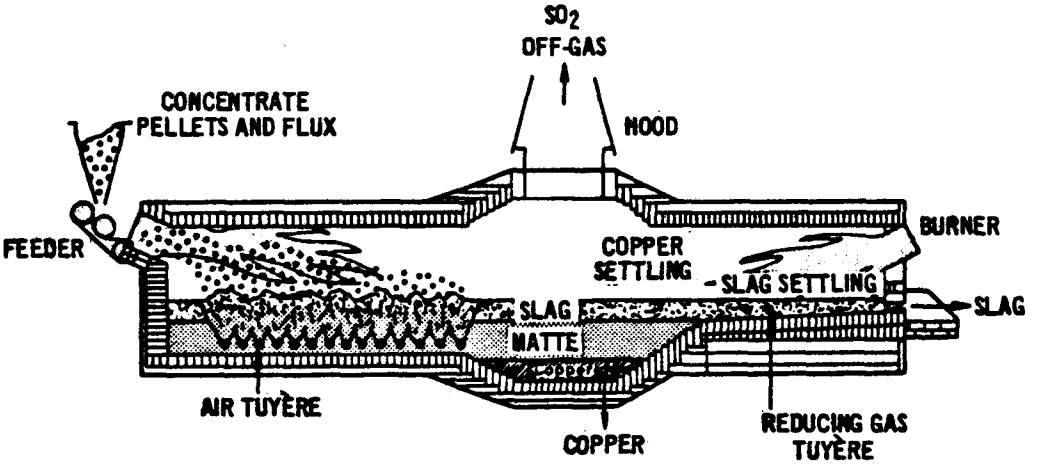

Figure 7. Noranda Continuous Smelting

EMISSIONS

PYROMETALLURGICAL SMELTING

The principal air contaminants emitted from primary smelters are sulfur dioxide and particulates. Sulfur dioxide is a major product inevitably generated in the pyrometallurgical process, as previously explained. Particulates, on the other hand, are generated mainly in the manipulation of materials or in combustion of fuel, and are not inherent products of the smelting process. A significant fraction of the particulate emissions may be represented by fugitive emissions from crushing and grinding operations and from charging and tapping of furnaces.

The following paragraphs describe emissions from processes and equipment common in pyrometallurgical smelters which process concentrates of sulfide ores.

Emissions From Bedding Plants

The preparation of the concentrate feed in the bedding plant can be a source of fugitive particulate emissions. The extent to which these emissions become a problem depends on the type of cover or enclosure which is used in the bedding area and the method of transporting the materials from the bedding plant to the smelting or roasting furnace. Local wind conditions are a factor in determining whether these emissions cause in-plant housekeeping problems or affect areas outside of plant property.

Roaster Emissions

Multiple-hearth and fluidized-bed roasters are sources of both particulates and sulfur oxides. Particulates consist of oxides of the metals which are found in the concentrate. Copper and iron oxides are the primary constituents, but other metals

such as arsenic, antimony, cadmium, lead, mercury, and zinc may also be present with metallic sulfates and sulfuric acid. Combustion products from fuel burning also contribute to the particulate emissions from multiple-hearth roasters. Fluidized-bed roaster gases typically contain 10- to 15-percent SO_2 as compared to 0.5 to 6 percent in multiple-hearth roaster gases.

Both types of roasters generate about the same amount of sulfur oxides per unit of charge, but the concentrations of SO_2 in the effluent gases are quite different due to the excessive leakage often associated with the multiple-hearths. Fluidized-bed roasters are completely enclosed and operate at a positive internal pressure (2 to 4 psig). Due to the positive internal pressure, any openings in the roaster walls can be large sources of fugitive emissions. Proper maintenance is effective in keeping these emissions to a minimum.

Emissions From Smelting Furnaces

Reverberatory and electric smelting furnaces also emit significant quantities of particulates and SO_2. A slight negative pressure is usually maintained within a reverberatory smelting furnace and infiltration air combines with combustion gases to produce large gas flow rates out of the unit. Occasionally, positive pressure surges, especially during charging, cause large quantities of fugitive particulates and SO_2 to escape through the furnace roof and walls. Electric smelting furnaces, on the other hand, do not produce combustion gases and do not utilize outside air leakage. Hence, effluent gas flow rates and fugitive emissions are reduced, and SO_2 concentration in the effluent gas is higher. Both furnace types produce fugitive emissions when tapping and pouring matte or slag into launders and ladles.

Converter Emissions

Emissions from converter operations follow a pattern generated by the air-blowing cycle, as shown in Figure 8. In the operation of a standard Peirce-Smith converter, the flue gases containing particulates and SO_2 are captured during the blowing phase by movable hooding which covers the converter mouth opening. Most hooding arrangements are fairly effective in capturing the effluent gas stream from the converter. To prevent freezing of the hood to the converter, caused by splashing of molten metal, there is a gap between the hood and the vessel. Fairly sophisticated draft control devices have been developed to maintain a negative pressure at the gap to draw air in for cooling and prevent excessive fugitive emissions. During charging and pouring operations, the hooding is removed to allow crane access, and significant fugitive emissions occur. These fugitive emission problems should theoretically be eliminated when using Hoboken converters, since the stationary side flues are in place during charging and pouring to collect the exhaust gases. However, in the only U.S. application of these converters, design problems have caused positive pressure buildups at the opening between the converter vessel and the flue. Therefore, it cannot at this time be said that the use of Hoboken converters is completely effective in eliminating fugitive emissions.

Other Sources

Remaining smelter processes handle material which is over 98-percent copper and contains very little sulfur. Hence, SO_2 emissions from these processes are insignificant when compared to roasters, smelting furnaces, and converters. Particulate emissions from fire-refining operations, however, may still be of concern. Fire-refining furnaces do not vent to a stack but are open and vent directly into the smelting building. If poling is used,

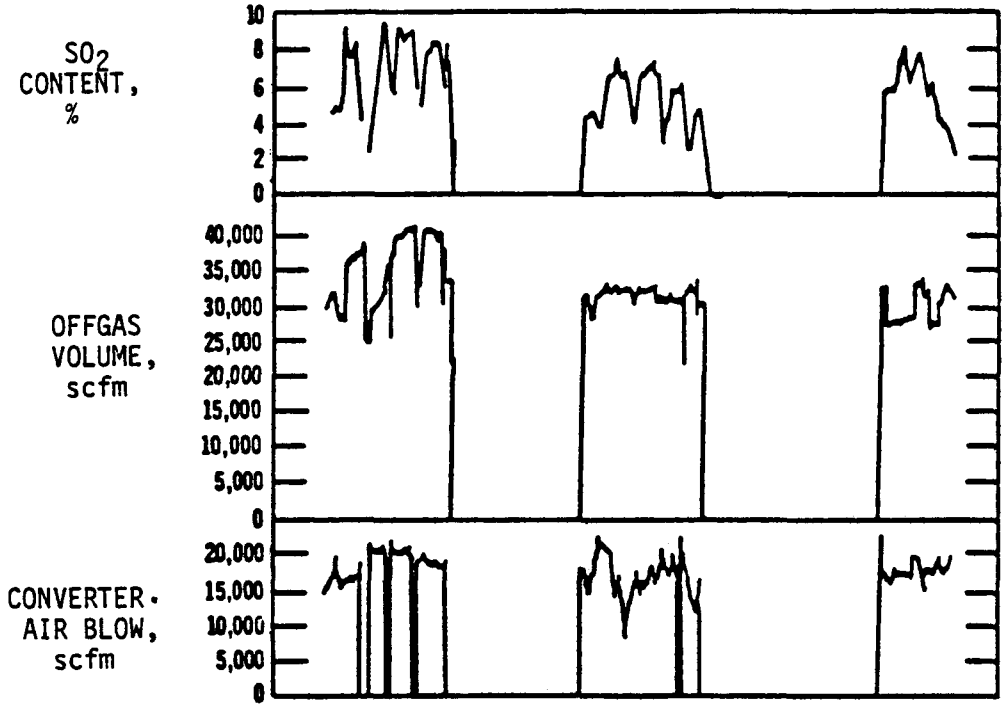

Figure 8. Fluctuations in Converter Offgas Volume and Sulfur Dioxide Concentrations

black smoke can be generated, but in general, particulate and SO_2 emissions from this type of furnace are minimal. Electrolytic refining does not produce emissions unless sulfuric acid tanks are open to the atmosphere.

Auxiliary functions at the smelter, such as slag processing, may also contribute to fugitive dust problems through the operation of crushing and grinding systems.

HYDROMETALLURGICAL SMELTING

Emissions from hydrometallurgical smelting plants are generally small in quantity and easily controlled. In the Arbiter process, ammonia gases are generated by leach reactors, mixer-settlers, thickeners, and tanks. All of these units are routinely covered and vented to a packed-tower scrubber. The scrubber removes the ammonia and recycles it into the system.

CONTROL PRACTICES

Control of particulate emissions from certain sources has been practiced for many years because of the recovery value of the copper contained in the dusts. Electrostatic precipitators have been used for control of particulates from roasters, smelting furnaces, and converters. Cyclones and scrubbers, however, are more commonly applied to control of particulates from the concentrate dryers.

In a fluidized-bed roaster, 70 to 90 percent of the solids are carried out through the top of the roaster with the effluent gases. The offgases from the fluidized-bed roaster are passed through a series of primary and secondary cyclones to collect the particulate which is then fed to the smelting furnace. The fraction of the particles carried out with the effluent gases depends principally upon the velocity of the gases in the roaster and the size range of the particles in the concentrate feed.

In the control of particulate emissions from smelting furnaces, standard practice has been to employ balloon flues or cyclones for pretreatments. These devices are used in conjunction with waste heat boilers and water spray chambers not only to recover large particles but also to cool the gases before further treating. Cooling of the gases helps to condense volatilized metals so that they can be collected by electrostatic precipitators (ESP's). ESP's are ideally suited to this type of application because of their ability to achieve high collection efficiencies when handling gases with high-temperature, high-volume, and low-grain-loading conditions. Overall collection efficiencies of 90 to 95 percent for ESP systems are normal for these applications. Efficiencies as high as 99.7 percent have been reported. In special instances where arsenic oxides are present in the effluent gases, additional cooling equipment, followed by baghouses, are normally used to prevent the emission of toxic substances.

Control of SO_2 emissions from smelters has been a more recent development. The most common form of SO_2 treatment presently utilized in U.S. smelters is the single-contact sulfuric acid manufacturing plant. Use of a sulfuric acid plant on copper smelter effluent gas streams requires that the gas be free from particulate matter and sufficiently rich in SO_2. The first consideration requires the installation of high-efficiency scrubbers and mist-eliminators which handle the large gas flow rates generated by smelter processes. The requirement for a sufficient SO_2 concentration in the treated gas has, in the past, limited the use of sulfuric acid manufacture to only converter offgases. The offgases typically average about 4- to 7-percent SO_2 by volume. Gases from reverberatory smelting furnaces and multiple-hearth roasters have not been treated by themselves in sulfuric acid plants because SO_2 concentrations are low (0.5- to 6-percent SO_2) and concentration procedures or preheating would have to be used.

Process and equipment substitutions offer opportunities for improving control of SO_2 emissions. Thus, fluidized-bed roasters normally produce offgases containing 10- to 15-percent SO_2, whereas multiple-hearth roaster gases contain much less (0.5 to 6 percent). Again, electric smelting furnaces can produce effluents containing 4- to 8-percent SO_2, in contrast to reverberatory smelting furnaces, which usually yield 0.5 - 1.5-percent SO_2. Effluents from multiple-hearth roasters and reverberatory smelting furnaces can be reduced in volume and, thereby, enriched in SO_2 concentration, by careful control of operating conditions. Reduction of infiltration air by closing furnace wall holes, close monitoring of internal furnace pressure conditions, and use of oxygen-enriched combustion air are expedients which have been found to increase SO_2 concentration by reducing the volume of effluent gas. Such SO_2-rich streams can be treated individually or blended with low-SO_2 streams prior to treatment in an acid plant.

Typically, single-contact acid plants can achieve 96.5- to 97-percent conversion of SO_2 to acid. Approximately 2,000 parts per million (ppm) of SO_2 remains in the acid plant effluent gas. Double-contact acid plants collect 98 percent of the SO_2 and emit about 500 ppm SO_2. Absorption of the SO_2 in dimethylaniline (DMA) solution has also been used in U.S. smelters for production of liquid SO_2.

No control practices are currently utilized in U.S. smelters for NO_x, CO, or hydrocarbon emissions. NO_x, CO, and hydrocarbons are found in the offgas streams from units requiring fuel combustion. Multiple-hearth roasters, reverberatory furnaces, converters, and refining furnaces are sources of air contaminants. Data are available for assigning emission factors for NO_x emissions from reverberatory furnaces and converters in only one smelter configuration. Data are unavailable for assigning emission factors for CO and hydrocarbon.

CODING NEDS FORMS

The sources of emissions in a primary copper smelter are:

Source	SCC	Pollutants
Multiple-Hearth Roaster	3-03-005-02	Particulate, SO_2, NO_x, HC, CO
Reverberatory Smelting Furnace	3-03-005-03	Particulate, SO_2, NO_x, HC, CO
Converter Furnace	3-03-005-04	Particulate, SO_2, NO_x, HC, CO
Fire-Refining Furnace	3-03-005-05	Particulate, SO_2, NO_x, HC, CO
Concentrate Dryer	3-03-005-06	Particulate, NO_x, HC, CO
Finish Operations, General	3-03-005-08	Particulate
Fluidized-Bed Roaster	3-03-005-09	Particulate, SO_2, NO_x, HC, CO
Electric Smelting Furnace	3-03-005-10	Particulate, SO_2, NO_x, HC, CO
Electrolytic Refining	3-03-005-11	Particulate
Flash Smelting	3-03-005-12	Particulate, SO_2, NO_x, HC, CO
Continuous Smelting	3-03-005-13	Particulate, SO_2, NO_x, HC, CO

Standard NEDS forms for each of the sources, Figures 9 through 20 show entries for the SCC's and other codes. Entries in the data fields give information common to the designated equipment in primary copper smelters. Information pertinent to coding the source is entered on the margins of the forms and above or below applicable data fields. Entries for control equipment codes, other optional codes, emission factors, and required comments minimize the need to refer to code lists.

Data entered in EIS/P&R and NEDS must be actual values specific to and reported by the plant, rather than typical values.

IPP codes as shown in Figures 9 through 20 are taken from the AEROS Manual of Codes, Volume V, Section on NEDS Specific Codes, Chapter on Implementation Planning Program Process Identification, items for SIC code 3331. In IPP coding, a distinction is made, for both reverberatory furnaces and converters, as to whether a roaster is included in the smelter configuration; however, the roaster, if present, has its own separate code. These codes are listed in Table 2.

NATIONAL EMISSIONS DATA SYSTEM (NEDS)
ENVIRONMENTAL PROTECTION AGENCY
OFFICE OF AIR PROGRAMS

POINT SOURCE
Input Form

FORM APPROVED
OMB NO. 158-R0165

Name of Person Completing Form

State | County | AQCR | Plant ID Number

City | Utm Zone | Year of Record | Establishment Name and Address | Contact - Personal | Owner | Action

Point ID | Year of Record | SIC | Sub Process | UTM COORDINATES Horizontal km | Vertical km | STACK DATA Height (ft) | Diam (ft) | Temp (°F) | Flow Rate (ft³/min) | Plume Height (if no stack ft) | Points with common stack | Action

SIC: 3 3 3 1 0 1

Plume Height: 0

Points with common stack: 0000 IF NO COMMON STACK
XXXX POINT ID'S IF COMMON STACK

CONTROL EQUIPMENT

Year of Record | Boiler Design Capacity 10^6 BTU/hr | Primary Part. | Secondary Part. | Primary SO_2 | Secondary SO_2 | Primary NO_x | Secondary NO_x | Primary HC | Secondary HC | Primary CO | Secondary CO | ESTIMATED CONTROL EFFICIENCY (%) Part. | SO_2 | NO_x | HC | CO | Action

Boiler Design Capacity: 0

Primary Part.: 0 0 0

NATIONAL EMISSIONS DATA SYSTEM (NEDS)
ENVIRONMENTAL PROTECTION AGENCY
OFFICE OF AIR PROGRAMS

POINT SOURCE
Input Form

FORM APPROVED
OMB NO. 158-R0285

Name of Person Completing Form

Plant ID Number: State, County, AQCR

City | Utm Zone | Year of Record | Establishment Name and Address | Contact - Personal | OWN | Action

Point ID | Year of Record | SIC | UTM COORDINATES: Horizontal km, Vertical km | STACK DATA: Height (ft), Diam (ft), Temp (°F), Flow Rate (ft³/min), Plume Height (if no stack ft) | Points with common stack | Action

SIC: 3 3 3 1 0 1

Plume Height: 0

Points with common stack: 0000 IF NO COMMON STACK
XXXX POINT ID'S IF COMMON STACK

CONTROL EQUIPMENT

Year of Record | Boiler Design Capacity 10^6 BTU/hr | Primary Part. | Secondary Part. | Primary SO_2 | Secondary SO_2 | Primary NO_x | Secondary NO_x | Primary HC | Secondary HC | Primary CO | Secondary CO | ESTIMATED CONTROL EFFICIENCY (%): Part., SO_2, NO_x, HC, CO | Action

Boiler Design Capacity: 0

ESTIMATED CONTROL EFFICIENCY (%): 0 0 0

% ANNUAL THRUPUT: Dec-Feb, Mar-May, June-Aug, Sept-Nov | NORMAL OPERATING: Weekday, Weekend | EMISSION ESTIMATES (tons/year): Particulate, SO_2, NO_x, HC, CO | ESTIMATION METHOD: Part., SO_2, NO_x, HC, CO | % Space Heat | Action

ESTIMATION METHOD: 8

% Space Heat: 0

ALLOWABLE EMISSIONS (tons/year): Particulate, SO_2, NO_x, HC, CO | COMPLIANCE SCHEDULE: Comp. Sch., Year, Mo | COMPLIANCE STATUS UPDATE: Year, Mo, Day | ECAP | CONTROL REGULATIONS: Reg 1, Reg 2, Reg 3 | Action

SCC | Annual Fuel, Process, Solid Waste Operating Rate | Hourly Maximum Design Rate | Fuel Sulfur Content | Fuel Ash Content | Fuel Heat Content 10^6 BTU/acc | Comments | Source Contd. | Action

SCC: I 3, II 0, III 3, IV 0 0 5 0 9

Fuel Sulfur Content: 0

Fuel Ash Content: 0

SCC UNIT - TONS ORE

Comments: F L U I D - B E D R O A S T E R

Point ID | Year of Record | SCC: I, II, III, IV | COMMENTS | Action

Figure 10. Standard NEDS Form for Primary Copper Smelting: Fluidized-Bed Roaster

NATIONAL EMISSIONS DATA SYSTEM (NEDS)
ENVIRONMENTAL PROTECTION AGENCY
OFFICE OF AIR PROGRAMS

POINT SOURCE
Input Form

FORM APPROVED
OMB NO. 158-R0005

Name of Person Completing Form

State | County | AQCR | Plant ID Number

City | Utm Zone | Year of Plant Opening | Establishment Name and Address | Contact - Personal

Point ID | Year of Plant Opening | SIC | UTM COORDINATES Horizontal km | Vertical km | STACK DATA Height (ft) | Diam (ft) | Temp (°F) | Flow Rate (ft³/min) | Plume Height (if no stack ft) | Points with common stack

0000 IF NO COMMON STACK
XXXX POINT ID'S IF COMMON STACK

3 3 3 1 0 7 0

CONTROL EQUIPMENT | Year of Plant Opening | Boiler Design Capacity 10⁶ BTU/hr | Primary Part. | Secondary Part. | Primary SO_2 | Secondary SO_2 | Primary NO_x | Secondary NO_x | Primary HC | Secondary HC | Primary CO | Secondary CO | ESTIMATED CONTROL EFFICIENCY (%) Part. | SO_2 | NO_x | HC | CO

0 0 0

NATIONAL EMISSIONS DATA SYSTEM (NEDS)
ENVIRONMENTAL PROTECTION AGENCY
OFFICE OF AIR PROGRAMS

POINT SOURCE
Input Form

FORM APPROVED
OMB NO. 158-R0095

Name of Person Completing Form _____ Date _____

State | County | AQCR | Plant ID Number

City | Utm Zone | Year of Record | Establishment Name and Address | Contact - Personal | Owner | Action

Point ID | Year of Record | SIC | UTM Zone | UTM COORDINATES Horizontal km | Vertical km | STACK DATA Height (ft) | Diam (ft) | Temp (°F) | Flow Rate (ft³/min) | Plume Height (if no stack ft) | Points with common stack | Action

3 3 3 1 0 2 | 0 | 0000 IF NO COMMON STACK
XXXX POINT ID'S IF COMMON STACK

CONTROL EQUIPMENT

Year of Record | Boiler Design Capacity 10⁶ BTU/hr | Primary Part. | Secondary Part. | Primary SO_2 | Secondary SO_2 | Primary NO_x | Secondary NO_x | Primary HC | Secondary HC | Primary CO | Secondary CO | ESTIMATED CONTROL EFFICIENCY (%) Part. | SO_2 | NO_x | HC | CO | Action

0 | 0 0 0 0 0 0 0 0 0 0 0 0 0 0 0 0 0 0 0 0 0 0 | 0 | 0 | 0 | 0

Year of Record | % ANNUAL THRUPUT Dec-Feb | Mar-May | June-Aug | Sept-Nov | NORMAL OPERATING Hrs/Day | Days/Wk | Wks/Yr | EMISSION ESTIMATES (tons/year) Particulate | SO_2 | NO_x | HC | CO | ESTIMATION METHOD Part. | SO_2 | NO_x | HC | CO | % Sulfur Content | Action

0 | 0

Year of Record | ALLOWABLE EMISSIONS (tons/year) Particulate | SO_2 | NO_x | HC | CO | Comp. Sched. | COMPLIANCE SCHEDULE Year | Mo | COMPLIANCE STATUS UPDATE Year | Mo | Day | ECAP | CONTROL REGULATIONS Reg 1 | Reg 2 | Reg 3 | Action

Year of Record | SCC I | II | III | IV | Annual Fuel, Process, Solid Waste Operating Rate | Hourly Maximum Design Rate | Fuel Sulfur Content % | Fuel Ash Content % | Fuel Heat Content 10⁶ BTU/acc | Comments | Source Control | Action

SCC UNIT - TONS ORE; FUEL - 1,000 GAL FOR OIL; MILLION CU.FT. FOR NG

3 0 3 0 0 5 0 3 | 0 | 0 | 0 | ORV SMLT TCE WO RONSTP
3 9 0 0 0 0 5 | REVERB SMLT ICE FUELC

RESID. OIL-4; DIST. OIL-5; NG-6

Point ID | Year of Record | SCC I | II | III | IV | COMMENTS | Action

Figure 12. Standard NEDS Form for Primary Copper Smelting: Reverberatory Smelting Furnace Without Roaster

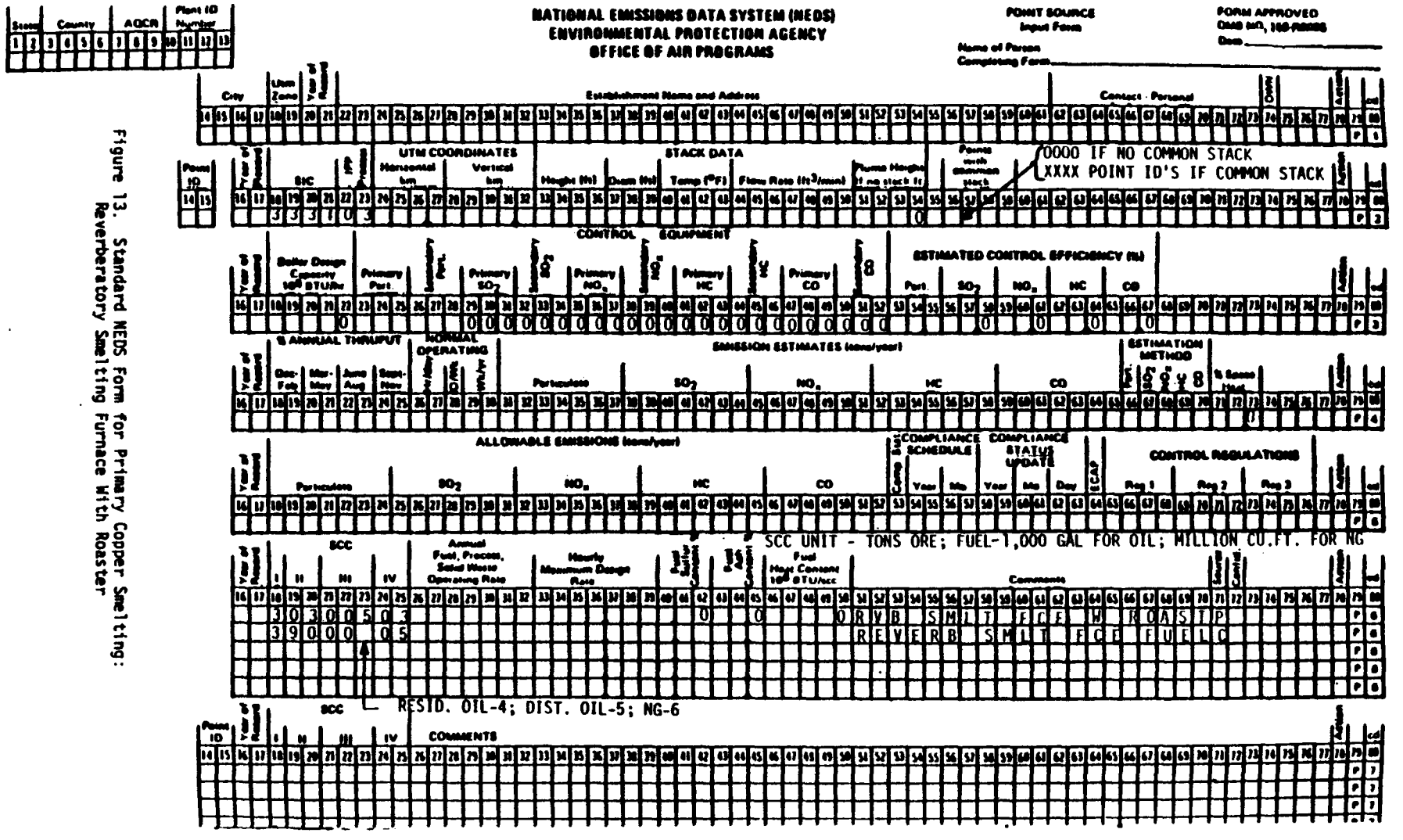

Figure 13. Standard NEDS Form for Primary Copper Smelting: Reverberatory Smelting Furnace With Roaster

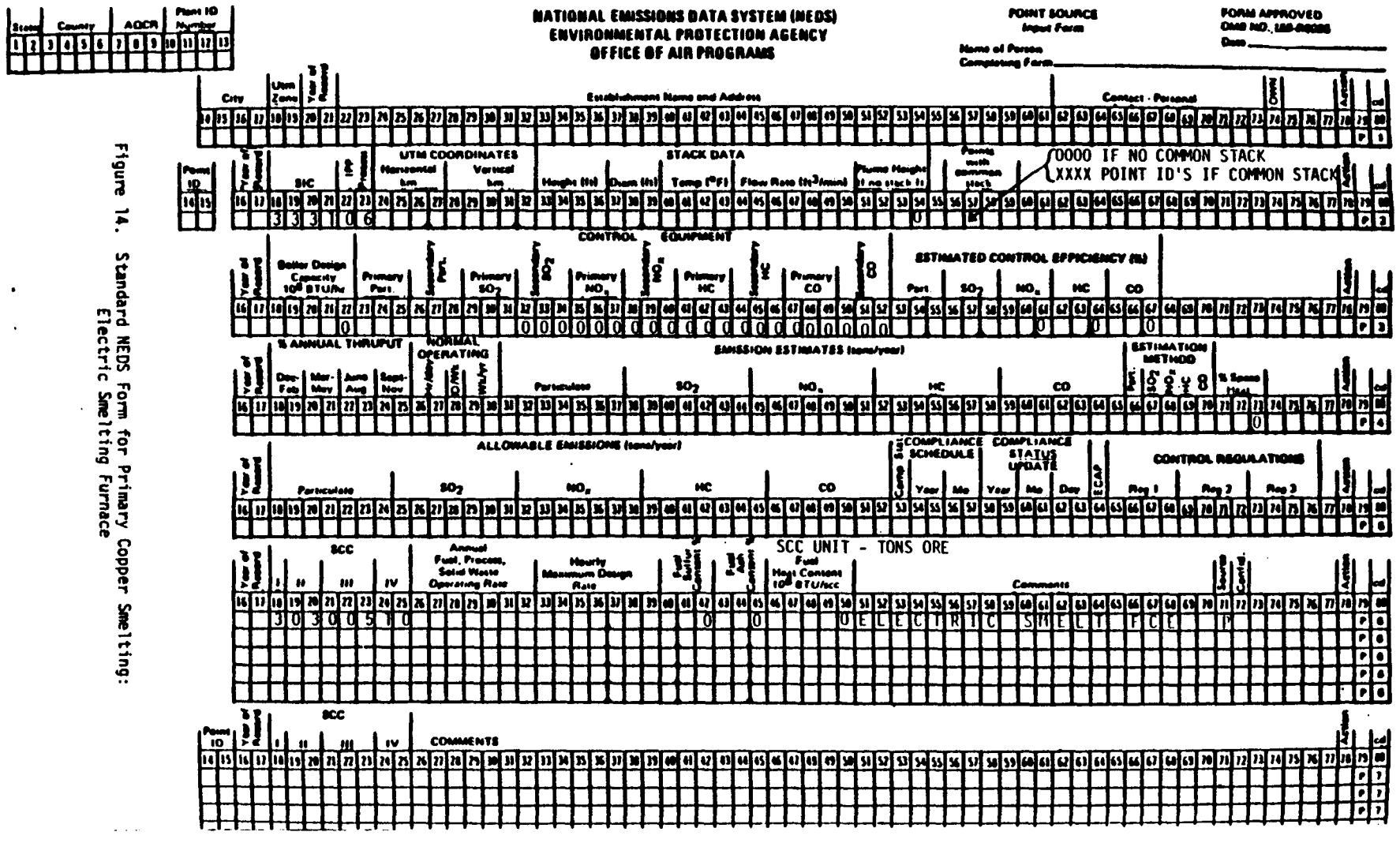

Figure 14. Standard NEDS Form for Primary Copper Smelting: Electric Smelting Furnace

NATIONAL EMISSIONS DATA SYSTEM (NEDS)
ENVIRONMENTAL PROTECTION AGENCY
OFFICE OF AIR PROGRAMS

POINT SOURCE
Input Form

FORM APPROVED
OMB NO. 158-R0005

Name of Person Completing Form

Date

State | County | AQCR | Plant ID Number

Year of Report | City | Utm Zone | Establishment Name and Address | Contact - Personal | Owner | Action | Ct

Point ID | Year of Report | SIC | Air Program | UTM COORDINATES Horizontal km | Vertical km | STACK DATA Height (ft) | Diam (ft) | Temp (°F) | Flow Rate (ft³/min) | Plume Height (if no stack ft) | Points with common stack | Action | Ct

0000 IF NO COMMON STACK
XXXX POINT ID'S IF COMMON STACK

CONTROL EQUIPMENT

Year of Report | Boiler Design Capacity 10⁶ BTU/hr | Primary Part. | Secondary Part. | Primary SO_2 | Secondary SO_2 | Primary NO_x | Secondary NO_x | Primary HC | Secondary HC | Primary CO | Secondary CO | ESTIMATED CONTROL EFFICIENCY (%) Part. | SO_2 | NO_x | HC | CO | Action | Ct

% ANNUAL THRUPUT Jan-Feb | Mar-May | June-Aug | Sept-Nov | NORMAL OPERATING Hrs/day | Days/wk | Wks/yr | EMISSION ESTIMATES (tons/year) Particulate | SO_2 | NO_x | HC | CO | ESTIMATION METHOD Part. | SO_2 | NO_x | HC | CO | % Sulfur | Action | Ct

ALLOWABLE EMISSIONS (tons/year) Particulate | SO_2 | NO_x | HC | CO | Comp Sch | COMPLIANCE SCHEDULE Year | Mo | COMPLIANCE STATUS UPDATE Year | Mo | Day | ECAP | CONTROL REGULATIONS Reg 1 | Reg 2 | Reg 3 | Action | Ct

SCC UNIT - TONS ORE; FUEL - 1,000 GAL FOR OIL; MILLION CU.FT. FOR NG

Year of Report | SCC I | II | III | IV | Annual Fuel, Process, Solid Waste Operating Rate | Hourly Maximum Design Rate | Fuel Sulfur Content % | Fuel Ash Content % | Fuel Heat Content 10⁶ BTU/acc | Comments | Source Control | Action | Ct

| | | |

NATIONAL EMISSIONS DATA SYSTEM (NEDS)
ENVIRONMENTAL PROTECTION AGENCY
OFFICE OF AIR PROGRAMS

POINT SOURCE
Input Form

FORM APPROVED
OMB NO. 158-R0005

Name of Person Completing Form

State | County | AQCR | Plant ID Number

City | Utm Zone | Year of Record | Establishment Name and Address | Contact - Personal | Owner | Action

Point ID | Year of Record | SIC | Utm | UTM COORDINATES Horizontal km | Vertical km | STACK DATA Height (ft) | Diam (ft) | Temp (°F) | Flow Rate (ft³/min) | Plume Height if no stack ft | Points with common stack | Action

3 3 3 1 0 5 | 0 | 0000 IF NO COMMON STACK
XXXX POINT ID'S IF COMMON STACK

CONTROL EQUIPMENT

Year of Record | Boiler Design Capacity 10^6 BTU/hr | Primary Part. | Secondary Part. | Primary SO_2 | Secondary SO_2 | Primary NO_x | Secondary NO_x | Primary HC | Secondary HC | Primary CO | Secondary CO | ESTIMATED CONTROL EFFICIENCY (%) Part. | SO_2 | NO_x | HC | CO | Action

0 | 0 0 0 0 0 0 0 0 0 0 0 0 0 0 0 | 0 | 0 | Action

% ANNUAL THRUPUT Dec-Feb | Mar-May | June-Aug | Sept-Nov | NORMAL OPERATING Hr/day | Day/Wk | Wk/Yr | EMISSION ESTIMATES (tons/year) Particulate | SO_2 | NO_x | HC | CO | ESTIMATION METHOD Part. | SO_2 | NO_x | HC | % Sample Final | Action

ALLOWABLE EMISSIONS (tons/year) Year of Record | Particulate | SO_2 | NO_x | HC | CO | Comp Sch | COMPLIANCE SCHEDULE Year | Mo | COMPLIANCE STATUS UPDATE Year | Mo | Day | ECAP | CONTROL REGULATIONS Reg 1 | Reg 2 | Reg 3 | Action

SCC UNIT - TONS ORE; FUEL - 1,000 GAL FOR OIL; MILLION CU.FT. FOR NG

Year of Record | SCC I | II | III | IV | Annual Fuel, Process, Solid Waste Operating Rate | Hourly Maximum Design Rate | Fuel Sulfur Content | Fuel Ash Content | Fuel Heat Content 10^6 BTU/lcc | Comments | Source | Control | Action

3 0 3 0 0 5 0 4 | 0 | 0 | 0 CONVERTER WIRO ASTER P
3 9 0 0 0 0 5 | CONVERTER FUEL G

RESID. OIL-4; DIST. OIL-5; NG-6

Point ID | Year of Record | SCC I | II | III | IV | COMMENTS | Action

Figure 16. Standard NEDS Form for Primary Copper Smelting: Converter Furnace With Roaster

NATIONAL EMISSIONS DATA SYSTEM (NEDS)
ENVIRONMENTAL PROTECTION AGENCY
OFFICE OF AIR PROGRAMS

POINT SOURCE Input Form

FORM APPROVED
OMB NO. 158-R0005

Name of Person Completing Form

Date

State | County | AQCR | Plant ID Number

City | Utm Zone | Year of Record | Establishment Name and Address | Contact - Personal | Date | Action | Type

Point ID | Year of Record | SIC | Utm Zone | UTM COORDINATES Horizontal km | Vertical km | STACK DATA Height (ft) | Diam (ft) | Temp (°F) | Flow Rate (ft³/min) | Plume Height (if no stack ht) | Plume width dimension Horiz.

SIC: 3 3 3 1 0 6

CONTROL EQUIPMENT

Year of Record | Boiler Design Capacity 10⁶ BTU/hr | Primary Part. | Secondary Part. | Primary SO_2 | Secondary SO_2 | Primary NO_x | Secondary NO_x | Primary HC | Secondary HC | Primary CO | Secondary CO | ESTIMATED CONTROL EFFICIENCY (%) Part. | SO_2 | NO_x | HC | CO

0 0 0

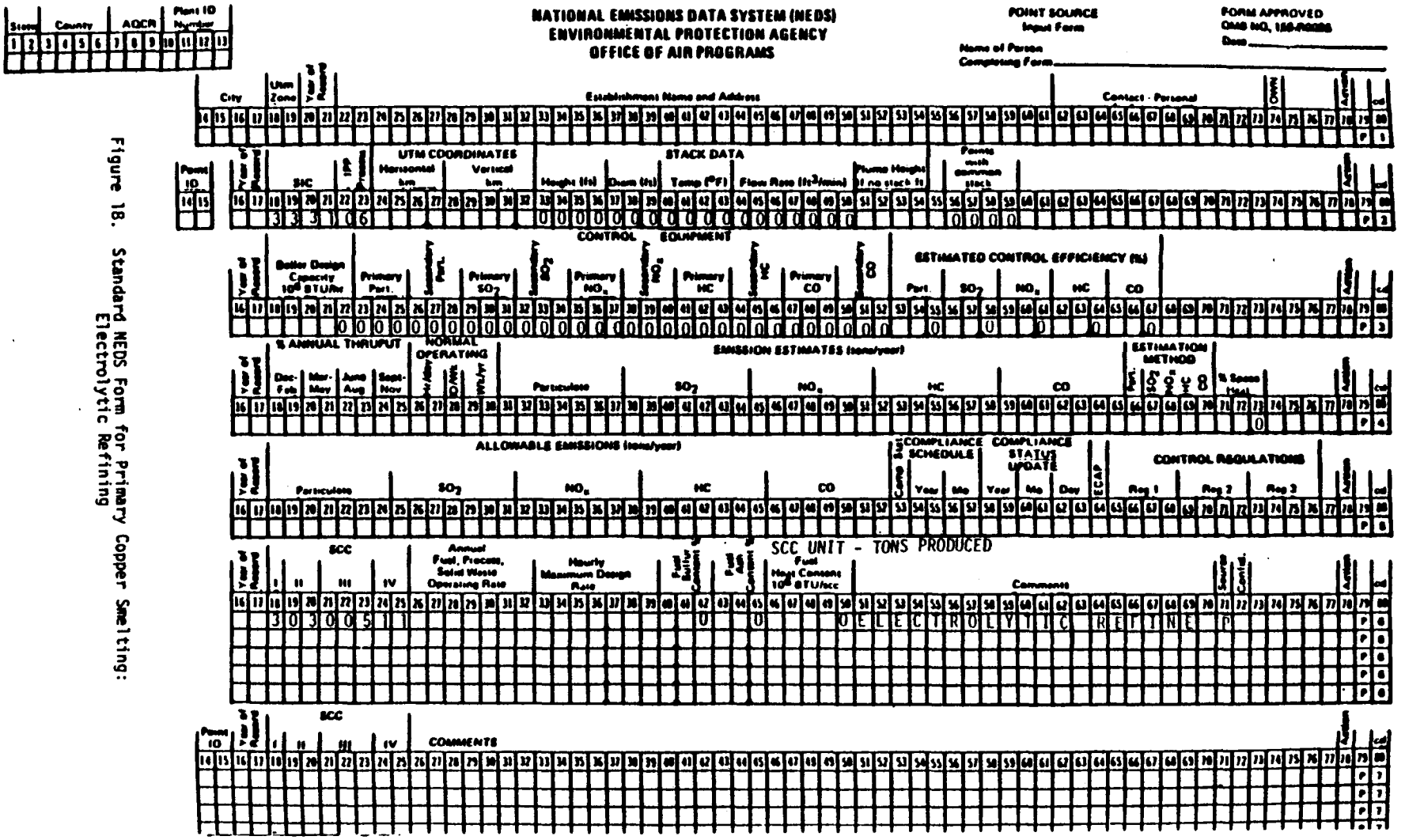

Figure 18. Standard NEDS Form for Primary Copper Smelting: Electrolytic Refining

NATIONAL EMISSIONS DATA SYSTEM (NEDS)
ENVIRONMENTAL PROTECTION AGENCY
OFFICE OF AIR PROGRAMS

POINT SOURCE
Input Form

FORM APPROVED
OMB NO. 158-R0085

Name of Person Completing Form

Date

State | County | AQCR | Plant ID Number

City | Utm Zone | Year of Record | Establishment Name and Address | Contact - Personal | DMN | Action

Point ID | Year of Record | SIC | UTM COORDINATES (Horizontal km, Vertical km) | STACK DATA (Height (ft), Diam (ft), Temp (°F), Flow Rate (ft³/min), Plume Height if no stack ft) | Points with common stack

0000 IF NO COMMON STACK
XXXX POINT ID'S IF COMMON STACK

CONTROL EQUIPMENT: Year of Record | Boiler Design Capacity 10⁶ BTU/hr | Primary Part. | Secondary Part. | Primary SO_2 | Secondary SO_2 | Primary NO_x | Secondary NO_x | Primary HC | Secondary HC | Primary CO | Secondary CO | ESTIMATED CONTROL EFFICIENCY (%): Part. | SO_2 | NO_x | HC | CO

% ANNUAL THRUPUT: Year of Record | Dec-Feb | Mar-May | June-Aug | Sept-Nov | NORMAL OPERATING: Hr/Day | Days/Wk | Wks/Yr | EMISSION ESTIMATES (tons/year): Particulates | SO_2 | NO_x | HC | CO | ESTIMATION METHOD: Part. | SO_2 | NO_x | HC | CO | % Space Heat

ALLOWABLE EMISSIONS (tons/year): Year of Record | Particulates | SO_2 | NO_x | HC | CO | Comp Sch | COMPLIANCE SCHEDULE: Year | Mo | COMPLIANCE STATUS UPDATE: Year | Mo | Day | ECAP | CONTROL REGULATIONS: Reg 1 | Reg 2 | Reg 3

SCC UNIT - TONS ORE; FUEL - 1,000 GAL FOR OIL; MILLION CU.FT. FOR NG

Year of Record | SCC: I | II | III | IV | Annual Fuel, Process, Solid Waste Operating Rate | Hourly Maximum Design Rate | Fuel Sulfur Content | Fuel Ash Content | Fuel Heat Content 10⁶ BTU/scc | Comments | Source | Control

SCC	Comments	Source	Control
30300512	FLASH SMELT FURNACE	P	
39000 5	FLASH FCE FUEL	P	C

RESID. OIL-4; DIST. OIL-5; NG-6

Point ID | Year of Record | SCC: I | II | III | IV | COMMENTS | Action

Figure 19. Standard NEDS Form for Primary Copper Smelting: Flash Smelting Furnace

NATIONAL EMISSIONS DATA SYSTEM (NEDS)
ENVIRONMENTAL PROTECTION AGENCY
OFFICE OF AIR PROGRAMS

POINT SOURCE
Input Form

FORM APPROVED
OMB NO. 158-R0026

Name of Person Completing Form _____ Date _____

State | County | AQCR | Plant ID Number

City | Utm Zone | Year of Record | Establishment Name and Address | Contact - Personal | Owner | Action

Point ID | Year of Record | SIC | UTM COORDINATES Horizontal km | Vertical km | STACK DATA Height (ft) | Diam (ft) | Temp (°F) | Flow Rate (ft³/min) | Plume Height if no stack ft | Points with common stack | Action

0000 IF NO COMMON STACK
XXXX POINT ID'S IF COMMON STACK

3 3 3 1 0 6 0

CONTROL EQUIPMENT

Year of Record | Boiler Design Capacity 10^6 BTU/hr | Primary Part. | Secondary Part. | Primary SO_2 | Secondary SO_2 | Primary NO_x | Secondary NO_x | Primary HC | Secondary HC | Primary CO | Secondary CO | ESTIMATED CONTROL EFFICIENCY (%) Part. | SO_2 | NO_x | HC | CO | Action

0 0 0

Table 2. IPP CODES FOR SIC NUMBER 3331 (PRIMARY COPPER SMELTING)

Process	Code
Combustion	XX
Roaster	01
Reverberatory furnace (w/o roaster)	02
Reverberatory furnace (w/roaster)	03
Converter (w/o roaster)	04
Converter (w/roaster)	05
Refining	06
Materials handling	07

For smelters which combine exhausts from roasters and smelting furnaces in a single stack or control system, it is acceptable to combine the sources as a single emission point, coded on one NEDS form. The point would be defined by the three SCC's, 3-03-005-02, 3-90-00X-01, and 3-03-005-03.

CODING EIS/P&R FORMS

The BEC's for use in EIS/P&R forms are shown herein:

Source	BEC
Multiple-Hearth Roaster	0MX (x=fuel)
Fluidized-Bed Roaster	0MX (x=fuel)
Concentrate Dryer	0MX (x=fuel)
Reverberatory Smelting Furnace	162
Electric Smelting Furnace	122
Converter Furnace	192
Fire-Refining (Anode) Furnace	192
Electrolytic Refining	(no code)
Flash Smelting Furnace	192
Continuous Smelting Furnace	192
Finish Operations, General	(no code)

In the above list, x refers to fuel according to the following code:

x = 1 Natural gas
2 Liquid petroleum
4 Distillate oil
5 Residual oil
6 Wood
8 Coal

GLOSSARY

Anode Copper - Slabs of blister copper used as anodes in electrolytic refining.

Autogenous Smelting - Smelting in which heat is self-generated by the reactions of the ore sulfur (as sulfide) without use of auxiliary fuel.

Balloon Flues - Low-velocity furnace exhaust venting which causes heavy particulate matter to settle into hoppers at the bottom of the flue.

Blister Copper - Impure copper (98.5 to 99.5 percent) product of converters, having a blistered appearance.

Btu - British thermal unit.

Calcine - Partially oxidized copper material produced by roasting.

Concentrate - Input material to the smelter which has been concentrated from raw copper ore by flotation to reduce the amount of material which must be transported from the mine to the smelter.

Converter - A furnace in which impurities are oxidized out of copper matte to produce blister copper by blowing air or oxygen-enriched air through the material.

Copper Blow - The cycle of converter operation during which cuprous sulfide is oxidized to blister copper.

Flux - A siliceous material added to smelting furnaces and converters to combine with iron materials for removal as slag.

Furnace Bath - The molten metal which is collected in the bottom of the furnace.

Gangue - Stony or earthy minerals found in metallic ore.

Green Charge - Unroasted, wet concentrate which is fed to the reverberatory smelting furnace.

Hydrometallurgical - Treatment of ore to recover pure metal by wet processes.

Launder - An inclined channel or trough for the conveyance of molten metal or slag from a furnace to a ladle.

Leaching - Dissolving soluble minerals out of an ore by use of percolating solutions such as acids.

Matte - An impure metallic sulfide produced by the smelting furnace.

Poling - A process of inserting into a molten metal bath wood poles which by destructive distillation produce refining gas.

Pyrometallurgical - Treatment of ore to recover pure metal by high-temperature processes.

Reverts - Scrap brass, bronze, and copper material which is added to converter charge.

Roasting - Heating of concentrate material to produce partially oxidized calcine material.

Siliceous - Describing a material containing abundant silica.

Slag - A nonmetallic product resulting from the interaction of flux and impurities in melting furnaces.

Slag Blow - The cycle of converter operation during which matte is oxidized to pure cuprous sulfide and slag.

Smelting - The heating of ore mixtures accompanied by a chemical change resulting in the formation of liquid metal matte.

Tapping - Opening the pouring hole of a melting furnace to remove molten material.

Tuyere - An opening in the shell and refractory lining of a furnace through which air is forced.

White Metal - Pure copper sulfide.

REFERENCES

Air Pollution Control Field Operations Manual, Volume III. Final Report for EPA Contract No. CPA 70-122. February 1972.

Atmospheric Emissions from Sulfuric Acid Manufacturing Processes. Public Health Service Publication No. 999 - AP-13. April 1965.

Background Information for New Source Performance Standards: Primary Copper, Zinc and Lead Smelters, Volume 1: Proposed Standards. U.S. Environmental Protection Agency, Research Triangle Park. Publication No. EPA-450/2-74-002a. October 1974.

Billings, Carl H. First Annual Report on Arizona Copper Smelter Pollution Control Technology. Arizona Department of Health Services. April 1977.

Biswas, A.K. and W.G. Davenport. Extractive Metallurgy of Copper. Pergamon Press, Oxford.1976.

Compilation of Air Pollutant Emission Factors. Second Edition, Third Printing. U.S. Environmental Protection Agency, Research Triangle Park. Publication No. AP-42. February 1976.

Control of Sulfur Dioxide Emissions in Copper, Lead, and Zinc Smelting. U.S. Bureau of Mines, Washington, D.C. Information Circular 8527. 1971.

Field Surveillance and Enforcement Guide for Primary Metallurgical Industries. U.S. Environmental Protection Agency, Research Triangle Park. Publication No. EPA-450/3-73-002. December 1973.

Guides for Compiling a Comprehensive Emission Inventory. U.S. Environmental Protection Agency, Research Triangle Park. Publication No. APTD-1135. March 1973.

Oglesby, Sabert, Jr., et al. A Manual of Electrostatic Precipitator Technology, Part II, Application Areas. Final Report for National Air Pollution Control Administration Contract No. CPA 22-69-73.

Weisenberg, I.J. and G.E. Umlauf. Evaluation of the Controllability of SO_2 Emissions from Copper Smelters in the State of Arizona. Final report for EPA Contract No. 68-02-1354, Task Order No. 8. June 1975.

Yannopoulos, J.C. and J.C. Agarwal (ed). Extractive Metallurgy of Copper, Volume I: Pyrometallurgy and Electrolytic Refining, and Volume II: Hydrometallurgy and Electrowinning. The Metallurgical Society of AIME, New York, New York. 1976.

APPENDIX D

SECONDARY COPPER SMELTING PROCESS COMPENDIUM

Prepared by

PACIFIC ENVIRONMENTAL SERVICES, INC.

EPA Contract No. 68-02-1890

Task Order No. 3

Project Officer: Arch A. McQueen

Prepared for

ENVIRONMENTAL PROTECTION AGENCY
National Air Data Branch
Research Triangle Park, North Carolina

Pacific Environmental Services, INC.

CORPORATE AND ENGINEERING 1930 14th Street Santa Monica, California 90404 Telephone (213) 393-9449

MIDWEST OPERATIONS Suite 228N 2625 Butterfield Road Oak Brook, Illinois 60521 Telephone (312) 325-5586

TABLE OF CONTENTS

Section	Page
SECONDARY COPPER SMELTING AND ALLOYING	1
PROCESS DESCRIPTION	1
Secondary Copper Smelting	1
Scrap Metal Pretreatment	3
Smelting	4
Refining	6
Melting and Alloying	7
Casting	9
Furnace Types	9
Blast Furnace or Cupola	10
Reverberatory Furnaces	10
Rotary Furnaces	11
Converters	11
Crucible Furnaces	16
Pot Furnaces	16
Electric Furnaces	16
Direct-Arc Furnaces	17
Indirect-Arc Furnaces	17
Induction Furnace	19
EMISSIONS	19
Scrap Metal Pretreatment	19
Cupola Furnaces	21
Reverberatory Furnaces	21
Converter Emissions	22
Emissions in Fire Refining	22
CONTROL EQUIPMENT	23
CODING NEDS FORMS	24
CODING EIS/P&R	27
GLOSSARY	38
REFERENCES	40

LIST OF ILLUSTRATIONS

Figure		Page
1	Low-Grade Copper Recovery	2
2	A Cupola Furnace	5
3	High-Grade Brass and Bronze Alloying	8
4	Gas-Fired, Cylindrical Reverberatory Furnace	12
5	Rotary-Tilting-Type Reverberatory Furnace Venting to Canopy Hood and Stack Vent	13
6	Copper Converter	14
7	Copper Converter Operation	15
8	Principles of Operation of Direct-Arc and Indirect-Arc Furnaces	18
9	Low-Frequency Induction Furnace With Fixed Hood	20
10	Systems Cooling Exhaust Gas Prior to Baghouse Entry	25
11	Standard NEDS Form for Secondary Copper Smelting: Scrap Dryer	29
12	Standard NEDS Form for Secondary Copper Smelting: Scrap Wire Burner	30
13	Standard NEDS Form for Secondary Copper Smelting: Blast Furnace	31
14	Standard NEDS Form for Secondary Copper Smelting: Cupola Furnace	32
15	Standard NEDS Form for Secondary Copper Smelting: Reverberatory Furnace	33
16	Standard NEDS Form for Secondary Copper Smelting: Rotary Furnace	34
17	Standard NEDS Form for Secondary Copper Smelting: Crucible Furnace	35
18	Standard NEDS Form for Secondary Copper Smelting: Electric Arc Furnace	36
19	Standard NEDS Form for Secondary Copper Smelting: Electric Induction Furnace	37

LIST OF TABLES

Table		Page
1	IPP Codes for SIC Number 3341 (Secondary Copper, Brass, and Bronze)	28

SECONDARY COPPER SMELTING AND ALLOYING

PROCESS DESCRIPTION

In the secondary copper industry, copper is recovered from scrap metal, which includes both copper and copper alloys. The processes used are determined by the type and quality of the feed material. Low-grade copper scrap, which contains less than 30-percent recoverable metal, is usually utilized in secondary smelting, whereas clean, selected scrap including brass and bronze may be melted (without smelting) to produce alloys. Generally, a secondary copper facility processes the less metal-rich feed and produces a more refined product. Alloy processors perform fewer refining operations.

Secondary Copper Smelting

Processes involved in copper recovery may be classified as pretreatment, smelting, and refining. Figure 1 presents a flowsheet depicting the major processes typically employed in a secondary copper smelter, producing refined copper from low-grade scrap.

Copper-bearing scrap, for industry purposes, has been classified as either new or old. New scrap is that produced in fabricating finished products; for example, turnings, borings, and other waste from machining copper, brass, and bronze. Old scrap consists mainly of obsolete, wornout, or salvaged articles such as wire, plumbing fixtures, parts from electrical machinery, automobiles, and domestic applicances. Other materials with copper values include slags, drosses, foundry ashes, and sweepings from smelters and copper processing industries. A detailed classification of copper-bearing scrap materials has been published by the National Association of Secondary Materials Industries.

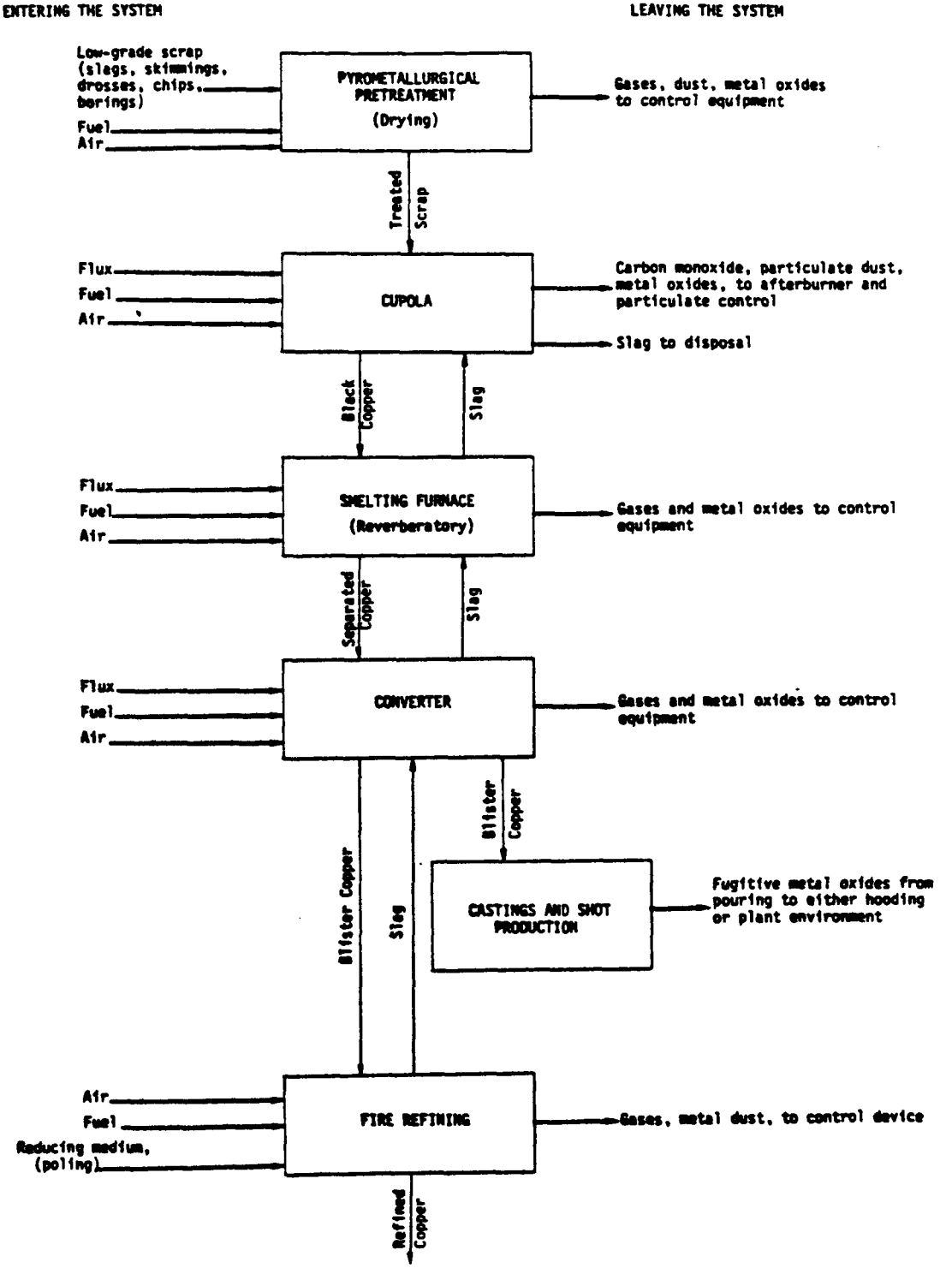

Figure 1. Low-Grade Copper Recovery

Specifications for the various classes have also been defined. Copper wire and tubing constitute almost half of the scrap used in the industry.

Scrap Metal Pretreatment

Feed scrap may contain a great deal of nonmetallic material including oil, grease, paint, insulation, rubber, and even chemicals such as antifreeze. The scrap is segregated for further treatment by a variety of processes adapted to the considerable number of input materials. Generally, it is sorted according to its copper content and cleanliness; clean scrap may be manually sorted for charging directly to a melting and alloying furnace. It is not unusual for this segregation to be performed prior to shipment to the smelter, but a complete facility provides for this operation.

In general, pretreatment processes may be classified as mechanical, pyrometallurgical (involving heat), or hydrometallurgical (involving water). Their purpose is to concentrate the valuable metals prior to smelting, refining, and alloying. Mechanical methods are as follows:

1. Hand sorting - Individuals sort the scrap as it is unloaded before being routed to storage.
2. Stripping - Any process involving the mechanical removal of insulation from copper cable.
3. Shredding - Insulated wire is reduced in size in a hammermill, and conveyed pneumatically to a cyclone where the metal and insulation are gravity-separated.
4. Magnets - Magnetic pulleys convey brass and bronze scrap and trap loose iron particles.
5. Briquetting - A powerful hydraulic press is used to reduce bulky scrap to small bales (briquettes).

Pyrometallurgical methods are as follows:

1. Sweating - The separation of low-melting point metals, such as lead, solder, and babbitt metal from the desired materials by heating.
2. Burning - The removal by incineration of insulation from wire scrap which, for some reason, cannot be mechanically separated.
3. Drying - A process employing a rotary kiln to vaporize excess cutting fluids from machine shop chips or borings.

Hydrometallurgical methods include gravity separation by flotation, leaching with ammonium carbonate or sulfuric acid, and recovery of copper from the leachate by chemical processing.

Smelting

Pretreated scrap containing between 10- and 30-percent copper is normally smelted in a cupola furnace (Figure 2). A cupola furnace is essentially a vertical, refractory-lined cylinder open at the top and equipped with airports at the bottom. Air is supplied by a forced-draft blower. Alternate charges of scrap, coke, and limestone are placed on top of a burning bed of coke; the metal melts and is drawn off through a tap-hole and spout at the bottom of the furnace. Oxides of copper and heavy metals are chemically reduced. Various impurities, such as iron, combine to form a slag, which collects on top of the molten metal and can be drawn off separately. A typical cupola furnace has a capacity of about 55 to 65 metric tons per day, producing so-called "black" copper of about 70- to 80-percent purity. The impurities may be sulfides of copper and iron, as well as other metals and their oxides: tin, zinc, lead, and others.

In the typical system of Figure 1, further smelting and refining are accomplished using a reverberatory "holding" furnace, a converter, and a reverberatory or rotary refining furnace. These operations are similar to those used in primary copper smelting (q.v.). The contents of reverberatory furnaces are furnaces

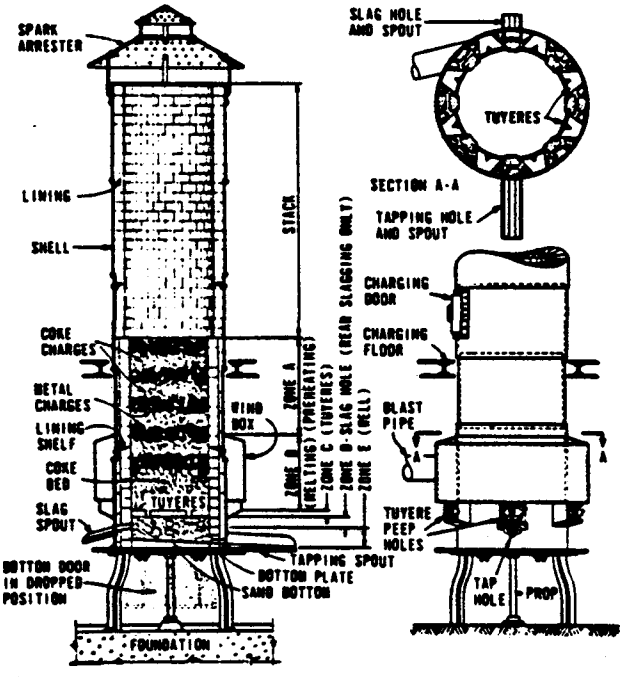

Figure 2. A Cupola Furnace

by radiation heat from burner flames, refractory walls and roofs. The function of the holding furnace is to retain the melt until a sufficient batch is accumulated as a charge to the converter and to allow for tapping the slag. (An electric-arc furnace can also be used for this purpose.)

The converter consists of a cylindrical steel shell which can be rotated about its longtudinal axis. An opening in one side admits the molten charge and vents gases. Air is blown through the melt by means of a horizontal row of pipes, with openings (called "tuyeres") which are below the liquid metal when the furnace is rotated. A silica flux is added to remove iron from the metal, while zinc and any sulfur are converted to their respective oxides by the air which is blown in.

The product from the converter is "blister" copper, usually 90- to 99-percent pure. This material may be poured and cast, or it may be transferred in the molten state to another furnace for a final pyrometallurgical process known as "fire refining."

Feed containing low-copper values can also be smelted in electric crucible furnaces, using oxygen in place of air for oxidation.

Refining

Blister copper is, typically, further purified by fire refining, to about the level of 99.9-percent purity. Electrolytic refining may be done as an additional step to produce electrolytic copper. These processes are essentially the same in secondary smelting as in primary smelting of copper.

Fire-refining furnaces are, typically, reverberatory furnaces, often of a rotary type. Capacities usually range from about 100 to 350 metric tons. In the furnace, air is blown through the molten metal to oxidize impurities which, as oxides,

are removed in the slag which is skimmed or poured off. Copper oxide, formed to the extent of less than 1 percent of copper, is reduced by "poling" (submerging wooden poles in the molten metal) or by supplying a reducing atmosphere of gas (by fuel-rich combustion). The usual sequence of events in fire refining is (1) charging; (2) melting; (3) skimming; (4) blowing; (5) adding fluxes; (6) reducing; (7) reskimming; and (8) pouring.

Electrolytic refining separates impurities from the copper by electrolysis in a solution bath containing copper sulfate and sulfuric acid. Metallic impurities form a sludge ("slime") which is removed and may be treated for recovery of precious metals.

Melting and Alloying

To produce bronze or brass rather than copper, an alloying operation is required. Where high-grade scrap is used, smelting may be unnecessary. Figure 3 presents a flow diagram for a typical operation of this kind.

In the case illustrated, scrap as received is manually and mechanically sorted to segregate pure copper, especially copper wire, from copper alloys. Insulated wire is fed to a wire-burner, an incinerator in which combustible insulation is removed. Brass and bronze scrap is sweated to remove low-melting metals such as solder, lead, and babbitt metal. The cleaned copper and alloys are then melted in an alloying furnace. Zinc and other metals may be added to bring the resulting mixture to the desired final composition. Fluxes are added to the mixture to remove impurities and to protect the melt against oxidation. Air or oxygen may be blown through the melt to adjust the composition by oxidizing excess zinc. With zinc-rich feed, the zinc oxide particulate loading in the exhaust is often recovered in a process baghouse.

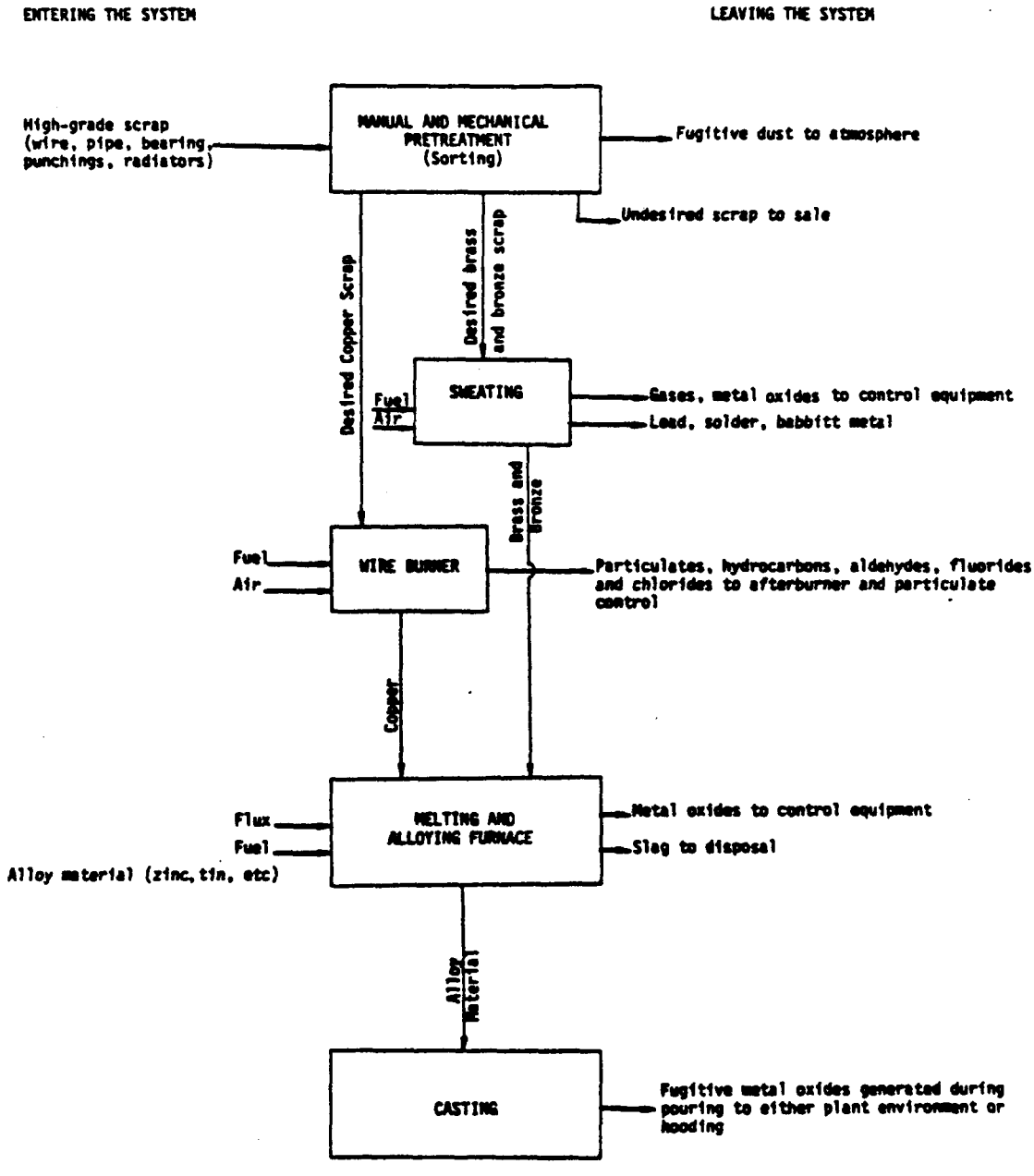

Figure 3. High-Grade Brass and Bronze Alloying

Brass and bronze shapes for working, such as slabs and billets, are usually produced in large reverberatory furnaces, of the type also used for secondary smelting and copper recovery. In smaller operations and to make commercial castings, the metals are melted in crucible furnaces, pot furnaces, or electric furnaces, both arc and induction types.

Casting

The final step is always casting of the metal into desired form. Blister copper is sometimes poured into water for quenching to produce copper shot, but is usually either transferred in the molten state to a refining furnace or cast into ingots. Fire-refined copper is cast into wirebar, anodes, and cathodes as well as ingots.

Brass and bronze are more often cast into special shapes. The mold, made of cast iron or similar material, is dusted with charcoal before filling, to facilitate removal of the solid casting. After the mold is filled, exposed metal surfaces are sometimes dusted with charcoal, to reduce skin oxidation due to oxygen from the air.

Furnace Types

Furnaces of many types are used in secondary copper operations and in brass and bronze melting and alloying. In recovery of copper from scrap having relatively low copper content, the charge is commonly treated in a blast furnace or cupola, where heavy-metal oxides and sulfides are reduced. Reverberatory furnaces are used as holding furnaces for the cupola melt, and sometimes in fire refining. Converters are used to oxidize sulfides, zinc, and base metals by blowing air through the melt. These and various other types of furnaces, frequently encountered in the secondary copper, brass, and bronze industries, are described in the following paragraphs.

Blast Furnace or Cupola

Although these names are sometimes used interchangeably, the cupola is generally considered to be a smaller variety of blast furnace. The principles of operation are essentially the same, but the larger furnaces are more common in primary smelting, where metal is recovered by reducing oxide or sulfide ores. The cupolas, commonly used in the secondary copper industry, recover metal from skimmings, slags, and scrap metal in a reducing atmosphere provided by the combustion of coke.

Blast furnaces and cupolas consist essentially of vertical, refractory-lined cylindrical shells (also known as "shafts," from which these furnaces are sometimes called "shaft furnaces") open at the top and equipped with air blowers at the bottom. The scrap is intermingled or layered with coke and limestone and heated by combustion. Molten metal and slag may be tapped separately from the base of the furnace, but more commonly both are continuously tapped into a "holding" furnace where they are separated. This is usually a stationary reverberatory furnace.

Reverberatory Furnaces

A reverberatory furnace operates by radiating heat from its burner flame, roof, and walls onto the material being heated. Combustion of fuel occurs directly above the molten bath; transfer of heat is accomplished almost entirely by radiation.

Reverberatory furnaces are available in many types and designs. Their use will depend on specific job requirements, such as the nature and quantity of the charge to be handled. The largest such units are open-hearth furnaces, which range in

capacity from about 40 to about 500 metric tons. In the secondary copper, bronze, and brass industry, such units are often used as holding furnaces to accumulate and separate the molten metal ("black" copper) and slag tapped from the cupola furnace. They may also be used in fire refining.

Large open-hearth furnaces are built with heat regenerators, consisting of brick checkerwork, which absorb heat from the effluent gases and transfer it to incoming air. The fuel is oil or gas. The charge is introduced through refractory-lined doors in the front wall; molten metal and slag are removed through tap-holes in the rear.

For melting and holding smaller amounts of copper, brass, and bronze, cylindrical reverberatory furnaces are common. (See Figure 4.) These are fired through tangential nozzles and charged through end doors on top openings. They usually utilize rotary tilting mechanisms to facilitate pouring of the molten contents.

Rotary Furnaces

A more elaborate type of reverberatory furnace, commonly called a "rotary" furnace, not only tilts for charging and pouring, but also rotates during the melting period to improve heat transfer. (Figure 5.) Two types are common. One is charged through the furnace, opposite the burner. The other has a side charge door at the center through which charging, skimming, and pouring operations are conducted.

Converters

A converter is basically a cylindrical reverberatory furnace, mounted to tilt about its longitudinal axis and modified to permit blowing air through the melt. Illustrations of the copper converter and copper converter operation are shown in Figures 6 and 7, respectively. A side charge door is used for charging, skimming, and pouring. Air is supplied through a header along the back of the cylinder (opposite the charge door) from which a horizontal row of tuyere pipes extend into the interior of the vessel.

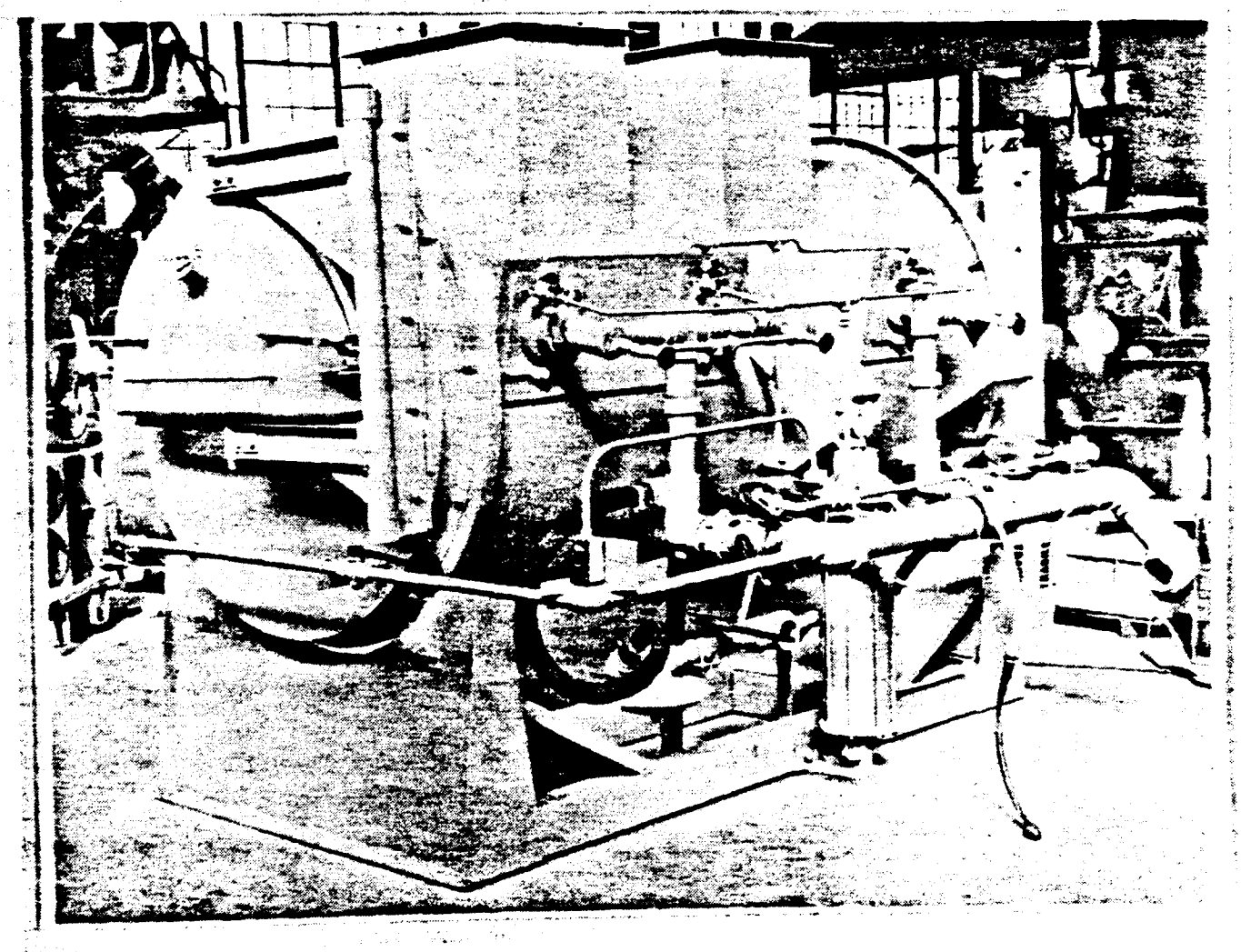

Figure 4. Gas-Fired Cylindrical Reverberatory Furnace

Figure 5. Rotary-Tilting-Type Reverberatory Furnace Venting to Canopy Hood and Stack Vent

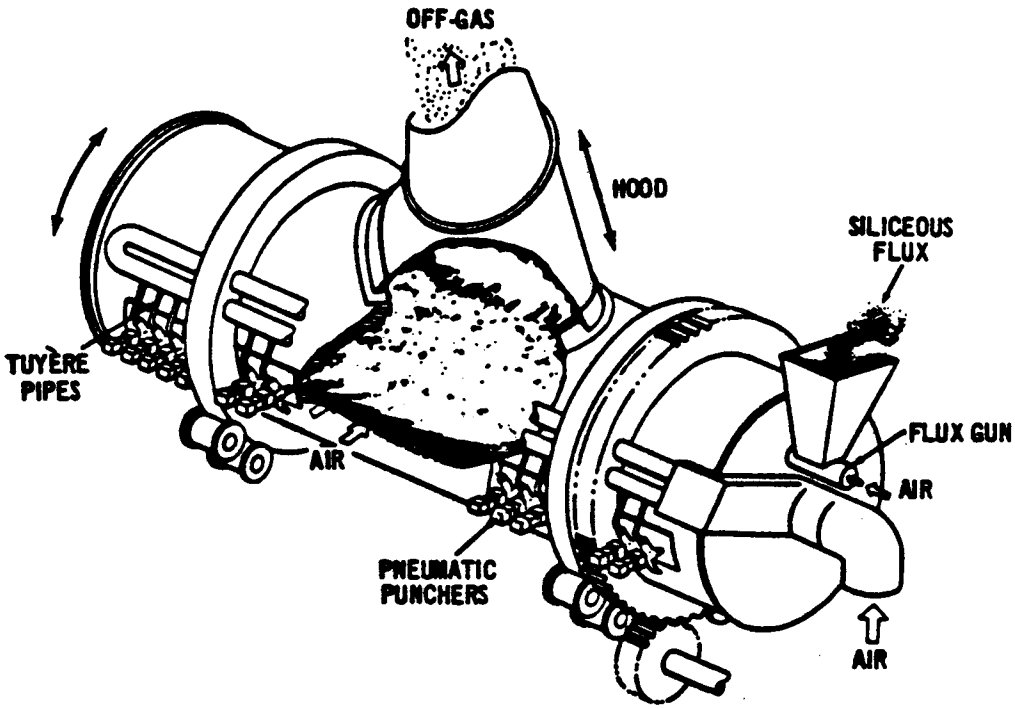

Figure 6. Copper Converter

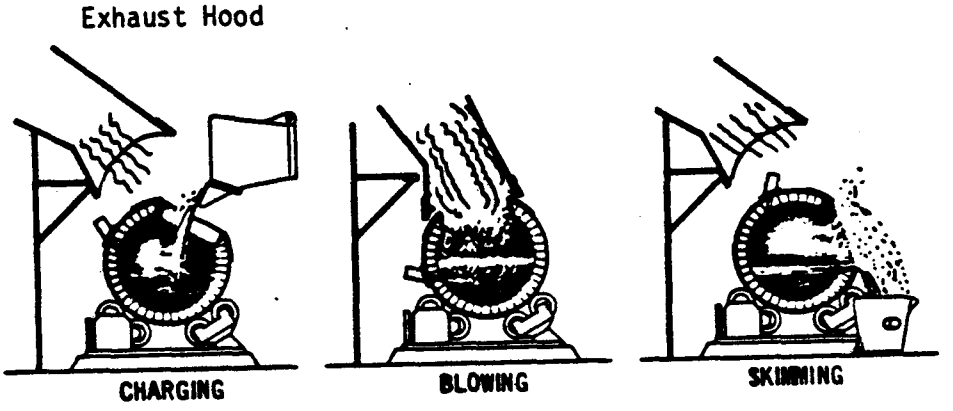

Figure 7. Copper Converter Operation

Crucible Furnaces

Crucible furnaces are indirect-fired furnaces having capacities of about 10 to 1,000 kilograms. They are used to melt metals having melting points not above 1,400°C (2,500°F). The covers of the crucible furnaces are constructed of materials similar to the inner shell lining and have a small hole over the crucible for charging metal and exhausting the products of combustion. The crucible rests on a pedestal in the center of the furnace and is commonly constructed of a refractory material such as a clay-graphite mixture or silicon carbide.

Crucible furnaces are classified as tilting, pit, or stationary furnaces. All types are provided with one or more gas or oil burners mounted near the bottom of the unit. Flames are directed tangentially around the inside of the furnace. The crucible is heated both by radiation and by contact with the hot gases.

Pot Furnaces

Pot furnaces are indirect-fired furnaces used to melt metals having melting points not above 800°C (1,400°F). These furnaces may be cylindrical or rectangular and consist of an outer shell lined with refractory material, a combustion chamber, and a pot. The pots are made of pressed steel, cast steel, or cast iron with flanged tops. The flange rests on the furnace wall, holds the pot above the furnace floor, and seals the contents of the pot from the products of combustion of the fuel used. The shape of the pot depends upon the operation to be conducted.

Electric Furnaces

Most pyrometallurgical operations can be conducted with the use of electricity rather than fuel for heating. Major advantages of the electric furnace over fuel-fired furnaces are furnace

atmosphere control and high-temperature operation. Temperatures as high as 6,000°F are possible for special processes.

Resistance furnaces are used mainly for ferroalloys. The other three types of electric furnaces are described in following paragraphs.

Direct-Arc Furnaces

In the direct-arc furnaces, many and varied arrangements are used to heat the metal charge, but radiation between arc and the metal bath is the principal method. Here, the heat is generated by radiation from the arc as well as from the resistance heat effect with the bath, as shown in Figure 8. Graphite and carbon electrodes are usually used and are spaced just below the surface of the slag cover. The current passes from one electrode through the slag, the metal charge, the slag, and back to the other electrode. In some arrangements, the current is carried from the metal charge to the earth. The slag serves a protective function by shielding the metal charge from vaporized carbon and the extremely high temperatures at the arc.

Indirect-Arc Furnaces

In the indirect-arc furnaces, the metal charge is placed below the electrodes, and the arc is formed between the electrodes and above the charge (Figure 8). Indirect-arc furnaces are used mainly in the steel industry. One of the common smaller furnaces is the indirect-arc rocking furnace, in which an automatic rocking action of the furnace is employed to ensure a homogeneous melt. This is done by mounting the refractory-lined steel shell on cog bearings so that the furnace may be rocked through a 200° range. Radiated heat from the indirect arc and conduction from the preheated refractory lining initially melt small scrap, forming a pool of molten metal at the bottom of the furnace. Then

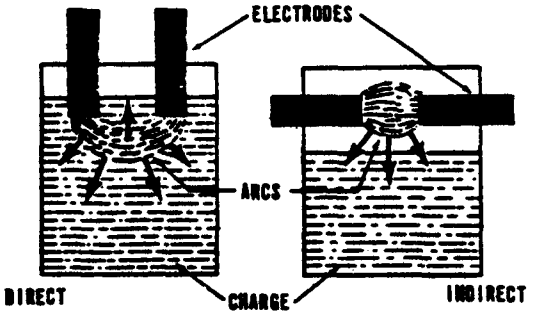

Figure 8. Principles of Operation of Direct-Arc and Indirect Arc Furnaces

the rocking action is initiated, and the molten metal washes against the refractory, picking up additional heat, which is transferred by convection and radiation to the larger pieces of metal. During the heat, the rocking action is advanced gradually to avoid a sudden tumbling of cold metal, which could fracture the graphite electrodes.

Induction Furnace

The induction furnace consists of a crucible within a water-cooled copper coil (Figure 9). An alternating current in the coil around the crucible induces eddy currents in the metal charge and thus develops heat within the mass of the charge. Heating is rapid and uniform and temperature can be accurately controlled. High-frequency induction furnaces are well adapted to copper-rich alloys (bronzes), but low-frequency induction furnaces are more suitable for zinc-rich alloys (brass).

EMISSIONS

The principal air contaminants emitted in secondary copper smelting and recovery are various forms of particulate matter. These include organics from the pretreatment and metal oxides from the pyrometallurgical processes. Some gases, including hydrogen chloride and sulfur dioxide, may be released by burning of insulation. Carbon monoxide is emitted in the operation of cupola furnaces.

Scrap Metal Pretreatment

Copper reclamation from insulated wire is commonly accomplished in single-chamber incinerators such as tepee burners, which may be portable to cover piled scrap. A great variety of materials composes the combustible insulation: rubber, paper, cotton, silk, plastics, paint and varnish, and others. During combustion, in the

Figure 9. Low-Frequency Induction Furnace
With Fixed Hood

absence of control equipment, black smoke is not uncommon, accompanied by disagreeable odors, inorganic materials, and oxygenated hydrocarbons. If the insulation contains polyvinyl chloride, hydrogen chloride is emitted. Sulfur dioxide is one product of the burning of rubber insulation and of some synthetic rubbers. In published results of one test, particulates recovered from wire-burning in a single-chamber incinerator amounted to 178 kilograms per metric ton (356 pounds per ton) of combustibles. The combustibles constituted 35 percent of the charge.

Scrap driers consisting of rotary kilns are often used to burn off oil and volatiles from turnings, borings, and other waste from machining. This process can cause discharge of dense smoke accompanied by volatile hydrocarbons and oxygenated materials.

Mechanical pretreatment, such as stripping, shearing, crushing, shredding, and briquetting, is likely to be a source of fugitive dust in copper recovery operations, both for secondary smelters and for alloying operations. Such emissions have not been quantitatively evaluated.

Cupola Furnaces

Air contaminants emitted from cupola furnaces are (1) gases, (2) dust and fumes, and (3) smoke and oil vapor. Typically, the gases may contain 10 percent or more of carbon monoxide. Dust in the discharge gases arises from dirt in the feed material and from fines in the coke and limestone charge. Smoke and oil vapor arise primarily from, the partial combustion and distillation of oil from greasy scrap charged to the furnace.

Reverberatory Furnaces

Reverberatory furnaces are used both for holding the melt from the cupola furnace preparatory to loading the converter with molten copper, and for melting and alloying in the production of brass or bronze.

Air contaminants from reverberatory furnaces include gases, smoke, fumes, and dusts. The particulate matter varies according to the fuel, alloy composition, melting temperature, type of furnace, and various operating procedures. In addition to fly ash, carbon, and mechanically produced dust, the emissions generally contain fumes resulting from condensation and oxidation of the more volatile elements, including zinc and lead.

Converter Emissions

Emissions of air contaminants from converter operations occur predominantly during the air-blowing process, in which zinc and sulfur are oxidized. In secondary smelting, sulfur is usually a rather minor constituent of the melt, in contrast to the major fraction encountered in primary smelting of sulfide ores. Fuel use in this operation is also relatively minor, as the oxidation of zinc, iron, and sulfur provides most of the necessary heat; fuel-associated contaminants are therefore minimal. However, if the material charged to the converter is not in the molten state, fuel combustion is required in order to melt it and typical fuel-combustion contaminants (i.e., sulfur dioxide, nitrogen oxides, carbon monoxide, fly ash) are emitted during melting.

During charging and pouring, significant fugitive emissions are likely to occur. These emissions have not been quantitatively evaluated.

Emissions in Fire-Refining

Fire-refining generates relatively little sulfur dioxide or metallic oxide particulates, since the blister copper charged is at least 90-percent pure. Poling, however, often produces black soot, which may be of concern.

CONTROL EQUIPMENT

Due to the wide variety of particulates emitted, many different control strategies are used.

Wire burning generates large amounts of particulate matter in the form of unburned combustibles. These emissions are most effectively controlled by a direct flame afterburner. If the afterburner combustion temperature is maintained at a minimum of 1,000°C (1,800°F), an efficiency of 90 percent can be expected. If the insulation contains polyvinyl chloride, hydrogen chloride gas will be a contaminant. An afterburner will not control this contaminant, but it can be reduced by a water scrubber.

Particulate emissions associated with the drying process are controlled by a variety of control devices. Drying temperatures of 70° to 150°C (150° to 300°F) are low enough to allow a baghouse to operate without precooling of inert gases. Baghouse efficiencies of 99 percent and above can be anticipated. Other means of control used include cyclones (60- to 75-percent efficiencies) and wet (venturi) scrubbers with efficiencies of approximately 65 percent.

Emissions associated with the charging of scrap to melting furnaces can be reduced by turning off the burners during charging. The technique has several effects. It reduces the volume of escaping air which can entrain contaminants. If the furnace operates in conjunction with a baghouse, the operation of the baghouse blower with the burner off actually produces a negative pressure in the furnace, further reducing emissions. The escaping fumes from charging and pouring are commonly captured by being drawn upward through ducts to the same control equipment which services the furnace exhaust gases.

There are many possible systems for the control of the metal oxide fumes escaping from the furnace during melting. Baghouses,

electrostatic precipitators, and wet scrubbers are most common. Due to the small size of the metal oxide particles to be captured (0.3 to 0.5 microns), the baghouse is the most effective device, reaching efficiencies well in excess of 99 percent.

The temperature of the exit gas from the melting furnace is approximately 1,200°C, which would destroy a baghouse. Several practices are used to cool the gases to temperatures the baghouse can handle (below 260°C). Figure 10 shows a two-stage cooling system consisting of water-jacketed coolers followed by radiant cooling which reduces the baghouse outlet temperature to 180°C (350°F).

Although electrostatic precipitators are reputed to be extremely effective for collecting particles in the size range exhibited by these metal oxides, experience has shown that collection efficiency for lead and zinc oxides is low, perhaps due to unusual resistivity in these systems. Electrostatic precipitators have been little used in control of furnace emissions, as their optimum application appears to be for larger gas flow rates.

Wet scrubber installations must be restricted to applications where the particle size range is above 1 micron and even then collection efficiencies are only in the 50- to 65-percent range.

CODING NEDS FORMS

The emissions sources in a secondary copper smelter and in brass or bronze alloying are:

Source	SCC	Pollutants
Blast furnace	3-04-002-01	Particulates, SO_2, CO, HC, NO_x
Crucible furnace	3-04-002-02	Particulates, SO_2, CO, HC, NO_x
Cupola	3-04-002-03	Particulates, SO_2, CO, HC, NO_x
Electric induction furnace	3-04-002-04	Particulates, SO_2, CO, Hc, NO_x

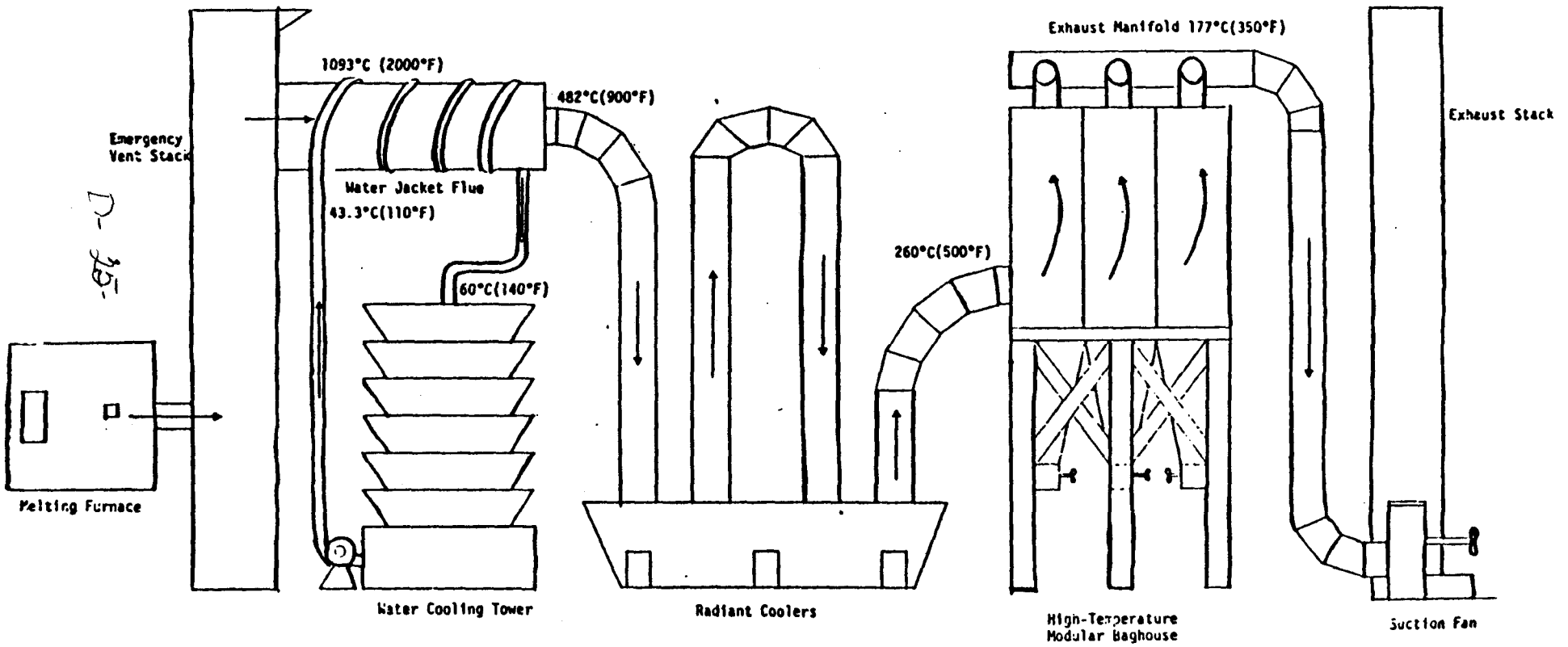

Figure 10. Systems Cooling Exhaust Gas Prior to Baghouse Entry

Source	SCC	Pollutants
Reverberatory furnace	3-04-002-05	Particulates, SO_2, CO, HC, NO_x
Rotary furnace	3-04-002-06	Particulates, SO_2, CO, HC, NO_x
Scrap dryer	3-04-002-07	Particulates, SO_2, CO, HC, NO_x
Wire burner	3-04-002-08	Particulates, SO_2, CO, HC, NO_x
Electric arc furnace	3-04-002-09	Particulates, SO_2, CO, HC, NO_x

Standard NEDS forms for each of these sources are shown in Figures 11 through 19, with entries for the SCC's and other codes. Entries in the data fields give information common to the designated equipment in secondary copper smelting and brass and bronze alloying. Information pertinent to coding the source is entered on the margins of the forms and above or below applicable data fields. Entries for control equipment codes, other optional codes, emission factors, and required comments minimize the need to refer to code lists.

Data entered in NEDS and in EIS/P&R must be actual values specific to and reported by the plant, rather than typical values.

IPP codes as shown in Figures 11 through 19 are taken from AEROS Manual of Codes, Volume V, section on NEDS specific codes, chapter on Implementation Planning Program Process Identification, items for SIC code 3341. These codes are listed in Table 1.

If one or more in-process fuels are used, the appropriate in-process fuel SCC code must be entered, together with the fuel use rate. The codes which apply to the various fuels are:

Fuels	SCC
Coal	3-90-003-05
Residual oil	3-90-004-05
Distillate oil	3-90-005-05
Natural gas	3-90-006-05
Coke	3-90-008-05
Wood	3-90-009-05

CODING EIS/P&R FORMS

The BEC's for use in EIS/P&R forms are shown herein:

Source	BEC
Blast furnace	112
Crucible furnace	102
Cupola furnace	112
Electric induction furnace	132
Reverberatory furnace	162
Rotary furnace	172
Electric arc furnace	122
Scrap dryer	192
Wire burner	192

Table 1. IPP CODES FOR SIC NUMBER 3341 (SECONDARY COPPER, BRASS AND BRONZE)

Process	Code
Combustion	XX
Scrap preparation	01
Blast furnace	06
Crucible furnace	07
Electric induction furnace	08
Cupola	09
Reverberatory furnace	11
Rotary furnace	12

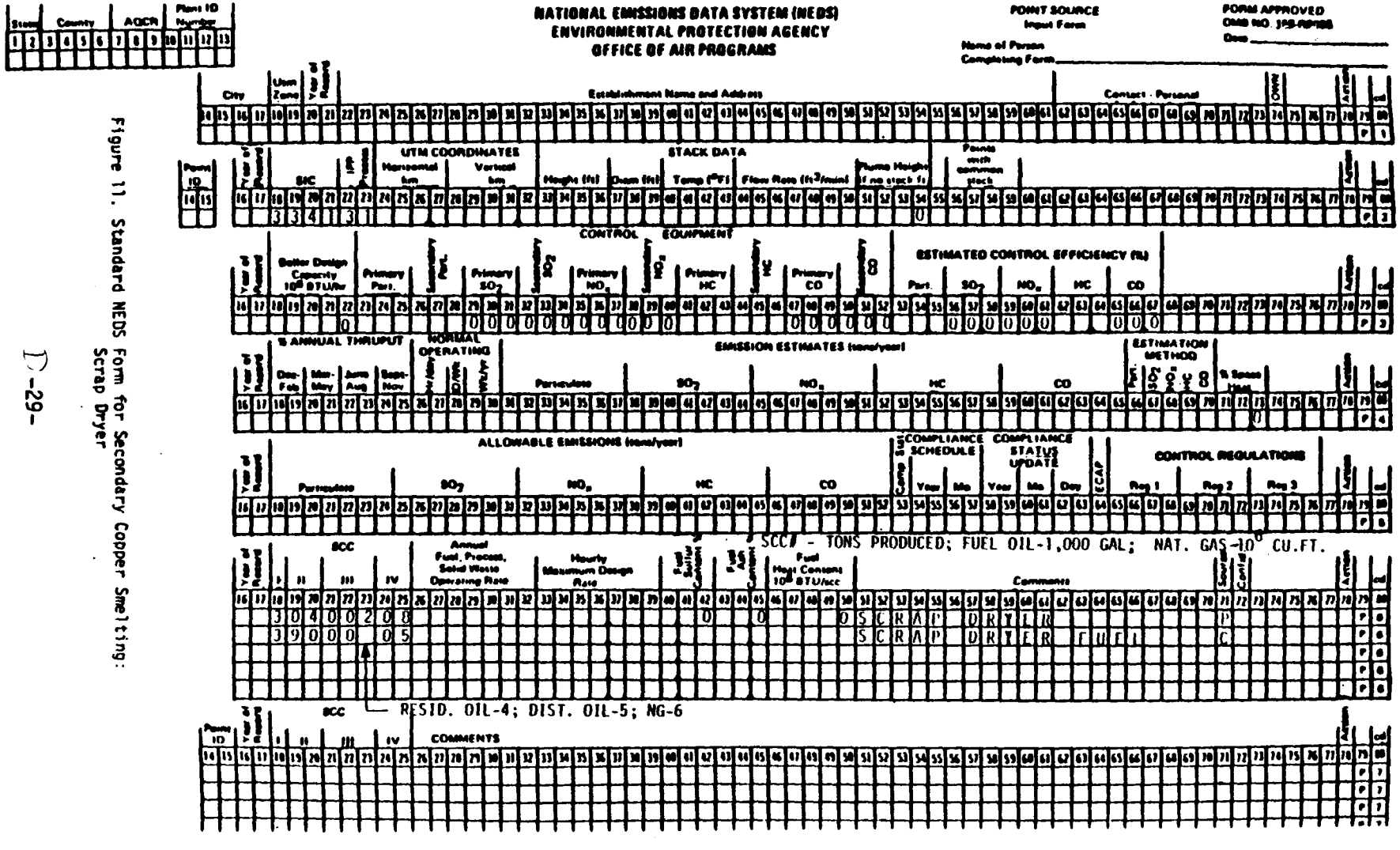

Figure 11. Standard NEDS Form for Secondary Copper Smelting: Scrap Dryer

NATIONAL EMISSIONS DATA SYSTEM (NEDS)
ENVIRONMENTAL PROTECTION AGENCY
OFFICE OF AIR PROGRAMS

POINT SOURCE
Input Form

FORM APPROVED
OMB NO. 158-R0055

Name of Person Completing Form _____

Date _____

State | County | AQCR | Plant ID Number

City | Utm Zone | Year of Record | Establishment Name and Address | Contact - Personal | Own | Action

Point ID | Year of Record | SIC | UTM COORDINATES (Horizontal km, Vertical km) | STACK DATA (Height (ft), Diam (ft), Temp (°F), Flow Rate (ft³/min), Plume Height (if no stack ft), Points with common stack) | Action

CONTROL EQUIPMENT | ESTIMATED CONTROL EFFICIENCY (%)

Year of Record | Boiler Design Capacity 10⁶ BTU/hr | Primary Part. | Secondary Part. | Primary SO_2 | Secondary SO_2 | Primary NO_x | Secondary NO_x | Primary HC | Secondary HC | Primary CO | Secondary CO | Part. | SO_2 | NO_x | HC | CO | Action

% ANNUAL THRUPUT | NORMAL OPERATING | EMISSION ESTIMATES (tons/year) | ESTIMATION METHOD

Year of Record | Oct-Feb | Mar-May | June-Aug | Sept-Nov | Hrs/Day | Days/Wk | Wks/Yr | Particulates | SO_2 | NO_x | HC | CO | Part. | SO_2 | NO_x | HC | CO | % Sulfur Content | Action

ALLOWABLE EMISSIONS (tons/year) | COMPLIANCE SCHEDULE | COMPLIANCE STATUS UPDATE | CONTROL REGULATIONS

Year of Record | Particulates | SO_2 | NO_x | HC | CO | Comp Sch | Year | Mo | Year | Mo | Day | ECAP | Reg 1 | Reg 2 | Reg 3 | Action

Year of Record | SCC (I, II, III, IV) | Annual Fuel, Process, Solid Waste Operating Rate | Hourly Maximum Design Rate | Fuel Sulfur Content | Fuel Ash Content | Fuel Heat Content 10⁶ BTU/acc | Comments | Suspended Control | Action

SCC# - TONS PRODUCED; FUEL OIL - 1,000 GAL; NAT. GAS - 10^6 CU.FT.

SCC	Annual Fuel, Process, Solid Waste Operating Rate	Fuel Sulfur Content	Fuel Ash Content	Comments
30400209	0	0	0	SCRAP WIRE BURNER
39000 05				WIRE BURNER FUEL

RESID. OIL-4; DIST. OIL-5; NG-6.

Point ID | Year of Record | SCC (I, II, III, IV) | COMMENTS | Action

Figure 12. Standard NEDS Form for Secondary Copper Smelting: Scrap Wire Burner

NATIONAL EMISSIONS DATA SYSTEM (NEDS)
ENVIRONMENTAL PROTECTION AGENCY
OFFICE OF AIR PROGRAMS

POINT SOURCE
Input Form

FORM APPROVED
OMB NO. 158-R0288

Name of Person Completing Form _____

Date _____

State | County | AQCR | Plant ID Number

City | Utm Zone | Year of Record | Establishment Name and Address | Contact - Personal | Comments | Action

Point ID | Year of Record | SIC | UTM COORDINATES Horizontal km | Vertical km | STACK DATA Height (ft) | Diam (ft) | Temp (°F) | Flow Rate (ft³/min) | Plume Height (if no stack ft) | Points with common stack | Action

3 3 4 1 3 1 0

CONTROL EQUIPMENT

Year of Record | Boiler Design Capacity 10⁶ BTU/hr | Primary Part. | Secondary Part. | Primary SO_2 | Secondary SO_2 | Primary NO_x | Secondary NO_x | Primary HC | Secondary HC | Primary CO | Secondary CO | ESTIMATED CONTROL EFFICIENCY (%) Part. | SO_2 | NO_x | HC | CO | Action

0 0 0

NATIONAL EMISSIONS DATA SYSTEM (NEDS)
ENVIRONMENTAL PROTECTION AGENCY
OFFICE OF AIR PROGRAMS

POINT SOURCE
Input Form

FORM APPROVED
OMB NO. [illegible]

Name of Person Completing Form _____

Date _____

Plant ID Number: 3340

SCC: 3-04-002-03; 3-90-008-05; 3-90-000-05

SCC# - TONS CHARGE; FUEL OIL-1,000 GAL; NAT. GAS-10^6 CU.FT.; COKE-TONS

SCC RESID. OIL-4; DIST. OIL-5; NG-6; COKE-8

Figure 14. Standard NEDS Form for Secondary Copper Smelting: Cupola Furnace

NATIONAL EMISSIONS DATA SYSTEM (NEDS)
ENVIRONMENTAL PROTECTION AGENCY
OFFICE OF AIR PROGRAMS

POINT SOURCE
Input Form

FORM APPROVED
OMB NO 158-R0088

Name of Person Completing Form

Date

State | County | AQCR | Plant ID Number

City | Utm Zone | Year of Record | Establishment Name and Address | Contact Personal | Owner | Action

Point ID | Year of Record | SIC | UTM | UTM COORDINATES Horizontal km | Vertical km | STACK DATA Height (ft) | Diam (ft) | Temp (°F) | Flow Rate (ft³/min) | Plume Height (if no stack ft) | Points with common stack | Action

SIC: 3 3 4

CONTROL EQUIPMENT

Year of Record | Boiler Design Capacity 10⁶ BTU/hr | Primary Part. | Secondary Part. | Primary SO_2 | Secondary SO_2 | Primary NO_x | Secondary NO_x | Primary HC | Secondary HC | Primary CO | Secondary CO | ESTIMATED CONTROL EFFICIENCY (%): Part. | SO_2 | NO_x | HC | CO | Action

Boiler Design Capacity: 0

% ANNUAL THRUPUT: Dec-Feb | Mar-May | June-Aug | Sept-Nov | NORMAL OPERATING Hr/day | Day/Wk | Wk/Yr | EMISSION ESTIMATES (tons/year): Particulates | SO_2 | NO_x | HC | CO | ESTIMATION METHOD: Part. | SO_2 | NO_x | HC | CO | % Space Heat | Action

ALLOWABLE EMISSIONS (tons/year): Particulates | SO_2 | NO_x | HC | CO | Comp Sch | COMPLIANCE SCHEDULE Year Mo | COMPLIANCE STATUS UPDATE Year Mo Day | ECAP | CONTROL REGULATIONS Reg 1 | Reg 2 | Reg 3 | Action

SCC | Year of Record | I | II | III | IV | Annual Fuel, Process, Solid Waste Operating Rate | Hourly Maximum Design Rate | Fuel Sulfur Content | Fuel Ash Content | Heat Content 10⁶ BTU/bcc | Comments | Source Control | Action

SCC #_fuel - TONS CHARGE; FUEL OIL-1,000 GAL; NAT. GAS-10⁶ CU.FT.

SCC	Comments
3040020 5	REVERBERATORY FNCE
3900 05	FURNACE FUEL

SCC RESID. OIL-4; DIST. OIL-5; NG-6

Point ID | Year of Record | I | II | III | IV | COMMENTS | Action

Figure 15. Standard NEDS Form for Secondary Copper Smelting: Reverberatory Furnace

NATIONAL EMISSIONS DATA SYSTEM (NEDS)
ENVIRONMENTAL PROTECTION AGENCY
OFFICE OF AIR PROGRAMS

POINT SOURCE
Input Form

FORM APPROVED
OMB NO. [illegible]

Name of Person Completing Form _____ Date _____

State | County | AQCR | Plant ID Number

City | Utm Zone | Year of Record | Establishment Name and Address | Contact - Personal | Comments | Action | Sel

Point ID | Year of Record | SIC | Utm Zone | UTM COORDINATES Horizontal km | Vertical km | STACK DATA Height (ft) | Diam (ft) | Temp (°F) | Flow Rate (ft³/min) | Plume Height (if no stack ft) | Points with common stack | Action | Sel

CONTROL EQUIPMENT

Year of Record | Boiler Design Capacity 10⁶ BTU/hr | Primary Part. | Secondary Part. | Primary SO_2 | Secondary SO_2 | Primary NO_x | Secondary NO_x | Primary HC | Secondary HC | Primary CO | Secondary CO | ESTIMATED CONTROL EFFICIENCY (%) Part. | SO_2 | NO_x | HC | CO | Action | Sel

% ANNUAL THRUPUT | NORMAL OPERATING | EMISSION ESTIMATES (tons/year) | ESTIMATION METHOD

Year of Record | Dec-Feb | Mar-May | June-Aug | Sept-Nov | Hrs/day | Days/wk | Weeks/yr | Particulates | SO_2 | NO_x | HC | CO | Part. | SO_2 | NO_x | HC | CO | % Space Heat | Action | Sel

ALLOWABLE EMISSIONS (tons/year) | COMPLIANCE SCHEDULE | COMPLIANCE STATUS UPDATE | CONTROL REGULATIONS

Year of Record | Particulates | SO_2 | NO_x | HC | CO | Comp Sch | Year | Mo | Year | Mo | Day | ECAP | Reg 1 | Reg 2 | Reg 3 | Action | Sel

SCC # - TONS CHARGE; FUEL OIL-1,000 GAL; NAT. GAS - 10⁶ CU.FT.

Year of Record | SCC I | II | III | IV | Annual Fuel, Process, Solid Waste Operating Rate | Hourly Maximum Design Rate | Fuel Sulfur Content | Fuel Ash Content | Fuel Heat Content 10⁶ BTU/acc | Comments | Source Sampled | Action | Sel

| | | |

NATIONAL EMISSIONS DATA SYSTEM (NEDS)
ENVIRONMENTAL PROTECTION AGENCY
OFFICE OF AIR PROGRAMS

POINT SOURCE
Input Form

FORM APPROVED
OMB NO. 158-R0116

Name of Person Completing Form _____

Date _____

State | County | AQCR | Plant ID Number

City | Utm Zone | Year of Record | Establishment Name and Address | Contact - Personal | Owner | Action

Point ID | Year of Record | SIC | Utm | UTM COORDINATES Horizontal km | Vertical km | STACK DATA Height (ft) | Diam (ft) | Temp (°F) | Flow Rate (ft³/min) | Plume Height (if no stack) | Points with common stack | Action

SIC: 3 3 4 1 0 7

Points with common stack: 0

CONTROL EQUIPMENT

Year of Record | Boiler Design Capacity 10^6 BTU/hr | Primary Part. | Secondary Part. | Primary SO_2 | Secondary SO_2 | Primary NO_x | Secondary NO_x | Primary HC | Secondary HC | Primary CO | Secondary CO | ESTIMATED CONTROL EFFICIENCY (%) Part. | SO_2 | NO_x | HC | CO | Action

Primary Part.: 0

Primary SO_2: 0 0 0

NATIONAL EMISSIONS DATA SYSTEM (NEDS)
ENVIRONMENTAL PROTECTION AGENCY
OFFICE OF AIR PROGRAMS

POINT SOURCE
Input Form

FORM APPROVED
OMB NO. 158-R0002

Name of Person Completing Form

Date

State | County | AQCR | Plant ID Number

City | Utm Zone | Year of Record | Establishment Name and Address | Contact - Personal | Comm | Action

Point ID | Year of Record | SIC | Utm Zone | UTM COORDINATES Horizontal km | Vertical km | STACK DATA Height (ft) | Diam (ft) | Temp (°F) | Flow Rate (ft³/min) | Plume Height (if no stack ft) | Plume with common stack | Action

3 3 4 1 3 1 0

CONTROL EQUIPMENT

Year of Record | Boiler Design Capacity 10⁶ BTU/hr | Primary Part. | Secondary Part. | Primary SO_2 | Secondary SO_2 | Primary NO_x | Secondary NO_x | Primary HC | Secondary HC | Primary CO | Secondary CO | ESTIMATED CONTROL EFFICIENCY (%) Part. | SO_2 | NO_x | HC | CO | Action

0 0 0

NATIONAL EMISSIONS DATA SYSTEM (NEDS)
ENVIRONMENTAL PROTECTION AGENCY
OFFICE OF AIR PROGRAMS

POINT SOURCE
Input Form

FORM APPROVED
OMB NO. 158-R0285

Name of Person Completing Form _____ Date _____

State | County | AQCR | Plant ID Number

City | Utm Zone | Year of Record | Establishment Name and Address | Contact - Personal | Owner | Action | S.C.

Point ID | Year of Record | SIC | Utm Zone | UTM COORDINATES Horizontal km | Vertical km | STACK DATA Height (ft) | Diam (ft) | Temp (°F) | Flow Rate (ft³/min) | Plume Height if no stack ft | Plume with common stack | Action | S.C.

3 3 4 1 0 8 0

CONTROL EQUIPMENT

Year of Record | Boiler Design Capacity 10^6 BTU/hr | Primary Part. | Secondary Part. | Primary SO_2 | Secondary SO_2 | Primary NO_x | Secondary NO_x | Primary HC | Secondary HC | Primary CO | Secondary CO | ESTIMATED CONTROL EFFICIENCY (%) Part. | SO_2 | NO_x | HC | CO | Action | S.C.

0 0 0

GLOSSARY

Alloy - Any substance having metallic properties and consisting of two or more elements; with few exceptions the components are usually metallic elements.

Anode - The positive terminal of an electrolytic cell; cast in copper for use in electroplating or for electrolysis.

Arc Furnace - A furnace used to heat materials by the discharge of electricity from electrodes.

Black Copper - The more or less impure metallic copper (70- to 99-percent copper) produced in blast furnaces.

Blister Copper - Impure copper (98.5 to 99.5 percent) product of converters, having a blistered appearance.

Crucible - A refractory vessel or pot used in a furnace for melting or calcining.

Cupola - A vertical cylindrical furnace for foundry use; the metal, coke, and flux are put into the top of the furnace onto a bed of coke through which air is blown.

Dross - An impurity, usually an oxide, formed on the surface of a molten metal.

Flotation - A process used to separate particulate solids by causing one group of particles to float; utilizes differences in surface chemical properties of the particles, some of which are entirely wetted by water while others are not.

Flux - A substance used to promote the fusing of minerals or metals, and certain chemical reactions.

Hydrometallurgical - Treatment of ore to recover pure metal by wet processes.

Indirect-fired furnace - A fuel-fired furnace in which melt is contained in a heated vessel and is not contacted by the flame.

Induction Furnace - An electric furnace in which heat is produced in a metal charge by electromagnetic induction.

Ingot - A solid metal casting suitable for remelting or working.

Leachate - The material removed from a mixture by leaching.

Leaching - Dissolving soluble minerals out of an ore by use of percolating solutions such as acids.

Poling - Insertion of wood poles into a molten metal bath, producing a reducing atmosphere by destructive distillation.

Pyrolysis - The breaking apart of complex molecules into simpler units by the use of heat, as in the pyrolysis of heavy oil to make gasoline.

Pyrometallurgical - Treatment of ore to recover pure metal by high-temperature processes.

Refining - Any process used to improve the purity of a metal to meet product specifications.

Reverberatory Furnace - A furnace in which the charge is heated by direct contact with flame and by radiation from furnace walls.

Rotary Furnace - A cylindrical furnace which can be rotated about its (horizontal) cylindrical axis.

Shaft Furnace - A vertical, refractory-lined cylinder in which a fixed bed (or descending column) of solids is maintained and through which an ascending stream of hot gas is forced.

Shot - Product made by pouring metal in finely divided streams; particles solidifying during descent and are cooled in a tank of water.

Slag - A nonmetallic product resulting from the interaction of flux and impurities in the smelting and refining of metals.

Smelting - The heating of ore or scrap metal mixtures accompanied by a chemical change resulting in the formation of liquid metal matte.

Tuyeres - An opening in the shell and refractory lining of a furnace through which air is forced into the melt.

Wirebar - Cast copper ingots used for the manufacture of wire.

REFERENCES

Air Pollution Aspects of Brass and Bronze Smelting and Refining Industry. Brass and Bronze Ingot Institute and National Air Pollution Control Administration. PB 190295. November 1969.

Air Pollution Engineering Manual, Second Edition. EPA Publication No. AP-40. May 1973.

Development Document for Proposed Effluent Limitations Guidelines and New Source Performance Standards for the Secondary Copper Subcategory of the Copper Segment of the Nonferrous Metals Manufacturing Point Source Category. U.S. Environmental Protection Agency, Office of Water and Hazardous Materials, Effluent Guidelines Division, Washington, D.C. November 1974.

Lauber, D.W. Conley, and D. Barshield, Air Pollution Control of Aluminum and Copper Recycling Processes. Pollution Engineering, p. 23-26. December 1973.

Multimedia Environmental Assessment of the Secondary Nonferrous Metal Industry, Volume II. Industry Profile. Final Draft. Radian Corporation, Austin, Texas. Prepared for the U.S. Environmental Protection Agency, Industrial and Environmental Research Laboratory, Cincinnati, Ohio under Contract No. 68-02-1319. June 21, 1976.

Particulate Pollutant System Study, Volume III: Handbook of Emission Properties. Midwest Research Institute, Kansas City, Missouri. Prepared for the U.S. Environmental Protection Agency, Air Pollution Control Office, Durham, North Carolina under Contract No. CPA 22-69-104. May 1, 1971.