U.S. DEPARTMENT OF COMMERCE
National Technical Information Service

PB-251 819

MANUFACTURE AND USE OF SELECTED ALKYLTIN COMPOUNDS: TASK II

MIDWEST RESEARCH INST.

PREPARED FOR

ENVIRONMENTAL PROTECTION AGENCY

MARCH 1976

EPA 560/-6-76-011 PB 251 819

THE MANUFACTURE AND USE OF SELECTED ALKYLTIN COMPOUNDS

TASK II

JANUARY 15, 1976

FINAL REPORT

ENVIRONMENTAL PROTECTION AGENCY
OFFICE OF TOXIC SUBSTANCES
401 M STREET, S.W.
WASHINGTON, D.C. 20460

BIBLIOGRAPHIC DATA SHEET	1. Report No. EPA 560/6-76-011	2.	3. Recipient's Accession No.
4. Title and Subtitle Manufacture and Use of Selected Alkyltin Compounds			5. Report Date - Issued March 1976 6.
7. Author(s) Thomas W. Lapp			8. Performing Organization Rept. No.
9. Performing Organization Name and Address Midwest Research Institute 425 Volker Boulevard Kansas City, Missouri 64110			10. Project/Task/Work Unit No. Task II 11. Contract/Grant No. 68-01-2687
12. Sponsoring Organization Name and Address Environmental Protection Agency Office of Toxic Substances Washington, D.C. 20460			13. Type of Report & Period Covered Final Report 14.

15. Supplementary Notes

16. Abstracts The purposes of this study were to identify the production methods, importation, exportation, use patterns, and exposure to man and the environment for selected alkyltin compounds from 1965 to 1974. For this study, only organotin compounds having alkyl groups with eight carbon atoms or less attached to the tin were considered. Data for the production methods included the specific process, raw materials, annual production quantities, major manufacturers, waste products, environmental management of process wastes, and other production data. Use patterns were identified and annual consumption data were compiled for each compound in the respective areas of utilization. Major consumers in each use area were identified. Various possible methods for the exposure of man and the environment to alkyltin compounds were discussed and evaluated. Future production quantities and areas of usage were estimated for the next 10 years.

17. Key Words and Document Analysis. 17a. Descriptors

Organometallic compounds
Tin organic compounds
Production methods
Waste treatment
Stabilizers (agents)
Biocides
Catalyst
Antifouling coatings

17b. Identifiers/Open-Ended Terms

17c. COSATI Field/Group Chemistry/Organometallic Chemistry

18. Availability Statement	19. Security Class (This Report)	21. No. of Pages
Release unlimited	UNCLASSIFIED	
	20. Security Class (This Page) UNCLASSIFIED	

FORM NTIS-35 (REV. 10-73) ENDORSED BY ANSI AND UNESCO. THIS FORM MAY BE REPRODUCED USCOMM-DC 8265-P74

STUDY ON CHEMICAL SUBSTANCES FROM INFORMATION CONCERNING THE MANUFACTURE, DISTRIBUTION, USE, DISPOSAL, ALTERNATIVES, AND MAGNITUDE OF EXPOSURE TO THE ENVIRONMENT AND MAN

Task II - The Manufacture and Use of Selected Alkyltin Compounds

by

T. W. Lapp

FINAL REPORT
April 2, 1976

EPA Contract No. 68-01-2687
MRI Project No. 3955-C

For

Environmental Protection Agency
Office of Toxic Substances
4th and M Streets, S.W.
Washington, D.C. 20460

NOTICE

This report has been reviewed by the Office of Toxic Substances, Environmental Protection Agency, and approved for publication. Approval does not signify that the contents necessarily reflect the views and policies of the Environmental Protection Agency. Mention of tradenames or commercial products is for purposes of clarity only and does not constitute endorsement or recommendation for use.

PREFACE

This report presents the results of Task II of a project entitled "Study on Chemical Substances from Information Concerning the Manufacturing, Distribution, Use, Disposal, Alternatives, and Magnitude of Exposure to the Environment and Man," performed by Midwest Research Institute (MRI) under Contract No. 68-01-2687 for the Office of Toxic Substances of the U.S. Environmental Protection Agency. Mr. Thomas Kopp was project officer for EPA.

Task II "The Manufacture and Use of Selected Alkyltin Compounds," was conducted by Dr. T. W. Lapp, Associate Chemist, who served as project leader and prepared this report, under the supervision of Dr. E. W. Lawless, Head, Technology Assessment Section. Dr. I. C. Smith, Senior Advisor for Environmental Science, provided technical consultation and Ms. Cassandra Collins provided technical assistance throughout the course of this study. This program had MRI Project No. 3955-C.

MRI would like to express its sincere appreciation to the several companies who provided technical information for this report.

Approved for:

MIDWEST RESEARCH INSTITUTE

L. J. Shannon

L. J. Shannon, Assistant Director
Physical Sciences Division

April 2, 1976

CONTENTS

Section		Page
I	Introduction	1
II	Summary	3
III	Historical Development and Future Outlook	5
	Historical Developments	5
	Future Outlook	7
IV	Market Input-Output Data	10
	Production	10
	Importation	10
	Exportation	12
	Use Patterns	13
	Final Products	14
V	General Manufacturing Processes	15
	Grignard Method	17
	The Direct Synthesis	20
	Ester Formation	22
	Manufacturing Costs	23
	Environmental Management	24
VI	Process Technology	28
	General Production Capacity	28
	Specific Organotin Compounds	30
	Handling and Transportation	58

Preceding page blank

CONTENTS (concluded)

Section		Page
VII	Areas of Utilization	60
	Heat Stabilizers for Poly(Vinyl Chloride)	60
	Catalysts	82
	Biocidal Application	88
	Miscellaneous Specialized Uses	92
VIII	Future Production and Utilization	96
	Heat Stabilizers	97
	Catalysts	100
	Biocidal Applications	101
IX	Material Balance and Energy Consumption	104
	Raw Materials	104
	Energy Consumption	107
	Waste Material Produced	107
	Exposure to Man and the Environment	110
X	Use Alternatives	118
	Alternative Raw Materials	118
	Alternative Manufacturing Processes	118
	Alternative Final Use Products	120

FIGURES

No.		Page
1	Production and Waste Flow Diagram for Alkyltin Compounds	18
2	Consumption of PVC in Rigid Pipe and Conduit and Estimated Consumption of Alkyltin Compounds as Heat Stabilizers	98
3	Reaction Schematic for the Preparation of Alkyltin Compounds	105

TABLES

No.		Page
1	Estimated Annual U.S. Production of Selected Alkyltin Compounds	11
2	Estimated Annual U.S. Consumption of Selected Alkyltin Compounds by Use Area	13
3	Estimated Production Capacities	29
4	Trade Names of Common Alkyltin Compounds	31
5	Estimated Consumption of Organotin Compounds as Heat Stabilizers	62
6	Major PVC Compounders	66
7	Estimated Consumption of Organotin Compounds in Pipe and Conduit	68
8	PVC Pipe and Conduit Use by Area	68
9	Estimated Consumption of Organotin Compounds in Injection Molding	70
10	Estimated Consumption of Organotin Compounds in Rigid Siding	72
11	Estimated Consumption of Organotin Compounds in Foam and Nonfoam Rigid Profiles	74
12	Estimated Consumption of Organotin Compounds in Nonfood Bottles	75

TABLES (concluded)

No.		Page
13	Estimated Consumption of Organotin Compounds in Food Use Bottles	77
14	Estimated Consumption of Organotin Compounds in Rigid Sheet and Film for Nonfood Uses	80
15	Estimated Organotin Consumption in Semirigid Sheet and Film for Nonfood Applications	81
16	Estimated Consumption of Octyltins and BTSA in Rigid and Semirigid PVC Sheet and Film for Food Use	83
17	Major Rigid Polyurethane Foam Producers	85
18	Major Silicone Elastomer Producers	86
19	Estimated Consumption of Organotin Compounds as Catalysts	87
20	Consumption of Raw Materials, 1965 to 1974	106
21	Energy Consumption	107
22	Waste Material Production	108

SECTION I

INTRODUCTION

Organotin compounds find widespread distribution throughout the industrial environment in four basic categories: heat stabilizers for poly(vinyl chloride) (PVC), biocides, polyurethane foam catalysts and catalysts for the room temperature vulcanization (RTV) of silicone rubber. Their potential exposure to man and the environment is exemplified by the diversity of applications these four categories encompass, including: PVC water pipe (both potable and nonpotable); marine antifouling agents; fungicides; vinyl exterior construction cladding; vinyl paints; polyurethane foam furniture; silicon rubber coatings and sealants; rigid PVC packaging for food products; and rigid and foam PVC extruded profiles.

MRI's objective has been to conduct a survey of selected compounds in the organotin industry to provide data on manufacturing processes, production quantities, importation and exportation, use areas, environmental management at production and formulation sites and other pertinent information concerning the use and manufacture of these materials. This report then serves to present a view of the status and scope of organotin technology and the industry this technology serves.

The chemicals investigated were selected on the basis of production volume and usage. Many of the commercially available organotins were omitted, because their usage was deemed minor with respect to the total consumption of organotin compounds. In this study MRI was also limited in its consideration only to those alkyl organotin compounds in which the alkyl groups bonded directly to the tin atom have eight carbon atoms or less. This limitation excluded two pesticides of economic importance: tricyclohexyltin hydroxide and triphenyltin hydroxide.

The following list of organotin compounds represents those materials which find major usage in the industry:

* Mono- and dimethyltin isooctylmercaptoacetates
* Mono- and dibutyltin isooctylmercaptoacetates
* Dibutyltin-bis(laurylmercaptide)

* Dibutyltin dilaurate
* Dibutyltin-bis(alkyl maleate ester)
* Dioctyltin-S,S'-bis(isooctylmercaptoacetate)
* Dioctyltin maleate polymer
* Bis(tributyltin)oxide
* Tributyltin fluoride

Our task is to assist the Environmental Protection Agency in the evaluation of the potential for environmental contamination by the selected organotin chemicals.

The organization of the compiled information is presented in a format which we hope will enable the reader to get a rapid and specific survey of the manufacture and use of organotins.

The limitations of this survey are those inherent in any study concerned primarily with proprietary information. As such, the report is of necessity dependent on the available literature and personal consultations with industry representatives. In many instances, estimations have been necessary due to the absence of published data. Therefore, the quantities stated constitute the best extrapolations MRI could make from the currently available data.

SECTION II

SUMMARY

For the time period 1965 to 1974, approximately 113 million pounds of selected alkyltin compounds were produced, of which dibutyltin isooctylmercaptoacetate accounted for about 72 million pounds. The other alkyltin compounds studied and their respective approximate production figures, in million pounds, were dimethyltin isooctylmercaptoacetate (14), dibutyltin laurylmercaptide (11), dibutyltin alkylmaleate (4), dibutyltin dilaurate (6), dioctyltin isooctylmercaptoacetate (3), dioctyltin maleate polymers (0.4), mixed metals (1), tributyltin oxide (3), and tributyltin fluoride (0.3). Nearly all of the production of these compounds are utilized in the United States with only approximately 4 to 5% being exported each year.

In the United States all alkyltin compounds, except for the methyltins, are produced commercially by starting with the Grignard reaction to form the tetraalkyltin, followed by a rearrangement reaction with stannic chloride to form the alkyltin chlorides. Methyltins are prepared by the direct reaction of methyl chloride with tin metal to form methyltin chlorides. The alkyltin chlorides are either hydrolyzed to the corresponding oxide or reacted directly with the appropriate ester to form the final product. Currently, the four major companies who produce these alkyltin compounds are M&T Chemicals, Cincinnati Milacron Chemicals, Argus Chemical Company, and Cardinal Chemical Company. Of these, the first two are larger producers than the latter two companies.

The major area of utilization of most of these compounds is as a heat stabilizer for rigid and semi-rigid poly(vinyl chloride). This area consumes approximately 80% of the total annual production of all of these alkyltin compounds. Of the 10 materials listed previously, all except dibutyltin dilaurate, tributyltin oxide, and tributyltin fluoride, are used as heat stabilizers. Dibutyltin dilaurate was used at one time as a heat stabilizer but currently finds only very limited usage in this area. The two dioctyltin compounds are used only in poly(vinyl chloride) applications that are in contact with food. All of the remaining compounds are rather general purpose heat stabilizers and find usage in several areas of application. The largest single area for the consumption of alkyltin

compounds is for rigid pipe and conduit, as well as pipe fittings. Other areas of application for these compounds are as catalysts for polyurethane and silicone elastomer production, biocides and poultry anthelmintics. Dibutyltin dilaurate is used as the catalyst in the foam and elastomer production as well as in poultry anthelmintics. The major biocidal compounds are tributyltin oxide and tributyltin fluoride.

While the major use of these compounds is in the area of heat stabilization, the greatest potential for direct contact with the environment probably is with the biocidal applications. Tributyltin oxide and fluoride are both active ingredients in antifouling paints and coatings for marine craft. As such, they are leached directly into seawater, particularly in the vicinity of the docks and marinas.

SECTION III

HISTORICAL DEVELOPMENT AND FUTURE OUTLOOK

The historical development of selected alkyltin compounds as PVC heat stabilizers, biocidal compounds, and catalysts is reviewed. Their future outlook, from 1975 to 1985, is discussed from a generalized viewpoint.

HISTORICAL DEVELOPMENTS

Organotin chemicals were synthesized over a century ago by the chemist Frankland (diethyltin dioxide in 1849)[1] and Lowig (1852).[2,3] Laboratory work continued through the next 75 years, but no practical applications were found until 1925[3] when organotins were claimed as mothproofing agents. No organotin chemicals, however, have enjoyed notable usage in this capacity.

The use of organotin compounds as stabilizers for chlorinated transformer oils dates back to 1932.[4] At that time, the transformer insulation consisted of paper and mineral oil. Large temperature gradients generated across the oil by power fluctuations in the transformer caused decomposition of the mineral oil to a sludge. This oxidative decomposition was prevented by the addition of tetraalkyl or tetraaryltin compounds.

In 1936, V. Yngve, working for Carbide and Carbon Chemicals Corporation, received the first patent involving dialkyltin compounds in the stabilization of PVC. This occurred just 3 years after the first patent on the plasticization of PVC.[5] It has been reported by a knowledgable source that the original work done here was by Dr. W. M. Quattlebaum but that in order to quickly get patent coverage, the work was included in the patent application of Yngve, which was about to be filed.

Carbide and Carbon Chemicals Corporation also employed Rugeley and Quattlebaum, who in 1939, claimed the use of dibutyltin dilaurates, dibutyltin oxides and similar compounds as stabilizers for dry spun vinyl

chlorine-acetate copolymer fibers.[5] Further patents by Yngve covered tetraalkyltins and dialkyltin dicarboxylic acid salts for general vinyl stabilization.

Quattlebaum and Young[6] were the first to use organotin salts commercially for the stabilization of vinyl chloride resins, and to produce dibutyltin oxide, dibutyltin dilaurate, and related salts which proved soluble in vinyl chloride resins.

Dibutyltin maleate, first mentioned in a 1942 patent application by Quattlebaum and Noffsinger, was a far more effective stabilizer than the dilaurate and it also prevented yellowing.[5,6]

During the late 1940's, the General Electric Company[3] used tetraorganotin compounds as scavengers for HCl released from askarels in certain short-circuited transformers. Although they were highly effective, present tetraorganotin usage in this capacity is of little note.[2]

The biocidal effects of organotins were not studied until the 1950's when workers at the Tin Research Institute discovered that triorganotin compounds had pronounced biocidal properties. This discovery led to a wealth of new uses for the organotin compounds. Toxicological interest was further stimulated in organotins when 100 cases of human poisonings and deaths occurred in 1954 in France. A pharmaceutical preparation based on diethyltin diiodide was contaminated with a highly toxic triethyltin impurity. This disastrous event retarded further research into the development of organotin compounds as practical biocides.[4,5,7]

An important step forward was the discovery, in 1950, that compounds containing tin-sulfur bonds had remarkable stabilizing action.[5,8] The first compounds of this type to be patented were the mercaptides and sulphides, and the di- and tri-mercaptides soon followed.

In 1951, the alkyltin mercapto acids and their esters were developed[5] and have found extensive use in the manufacture of blow-molded products because of the outstanding heat stability they impart to PVC.

The next important development was the introduction of dioctyltin stabilizers for food contact application. In addition to negligible mammalian toxicity, dioctyltin compounds have lower odor levels and better lubrication properties than corresponding butyltin compounds.[1,6,8] However, stabilization by the octylthiotin compounds is not as good as dibutyltin derivatives, but the best results are obtained using di-*n*-octyltin derivatives of thioglycollic acid.

M&T Chemical, Inc., conducted a 2 year chronic toxicity study as part of a 5 year screening project with the organotins.[8] The results were submitted to the U.S. Food and Drug Administration, and in 1968 approval was given for the use, in food-contact application, of di(n-octyl)tin maleate polymer and di(n-octyl)tin-S,S'-bis(isooctylmercaptoacetate).

In summary, after the inception of the first organotin compound, this new chemical field has enjoyed a wealth of investigation. However, it was not until after 1945 that the organotins were studied to any great extent as commercially important chemicals.

A further in-depth study of the organotin history can be found in H. Verity Smith's "The Development of the Organotin Stabilizers," published by the Tin Research Institute, December 1959.[5]

The developments in the organotin industry occurring after 1965 will be the subject of further investigation in this study.

FUTURE OUTLOOK

The future use of alkyltin compounds during the next 10 years appears to be towards increased consumption with yearly fluctuations depending upon the poly(vinyl chloride) market. Usage as heat stabilizers during the processing of rigid and semi-rigid PVC products is, by far, the largest use of alkyltin compounds and should continue to dominate their consumption pattern during the next 10 years. Biocidal applications have begun to consume increasing quantities of alkyltin compounds during the past 2 to 3 years, and this market should be a good growth area during the next 10 years. The alkyltin share of the catalyst market, both in urethane foam and silicone elastomers, has not increased during the past 10 years and should not increase to any appreciable extent during the next 10 years. Growth will occur as a result of increasing production of urethane foams and silicone elastomers, not as a result of an increase in the market shares.

There are at least three major factors which tend to cloud the picture regarding the future consumption of alkyltin compounds. The primary factor probably is the overall effect that the vinyl chloride monomer restrictions will have on future poly(vinyl chloride) production. Alkyltin consumption virtually lives and dies with the PVC market so that the future of PVC will dictate the future of alkyltin compounds. A second factor is the recent FDA proposed regulation to restrict PVC containers intended to contact food. At the present time, this proposed regulation directly affects only the two dioctyltin compounds. However, included in

the FDA proposal is a possible restriction on rigid PVC pipe for potable water. This use area includes large quantities of other alkyltin compounds and restriction in this area could be a major depressant for the entire industry. The third factor is the general economic conditions prevailing at the present time and, in particular, the construction industry. This industry consumes relatively large quantities of rigid and semi-rigid PVC products, almost all of which are stabilized with alkyltin compounds. At the present time, rigid PVC for uses such as siding, profiles, etc., control less than 2% of those markets. If rigid PVC was to increase its share of the siding market at the expense of aluminum, this would represent a tremendous increase in the PVC and organotin stabilizer market. A significant recovery of this industry or an expanded share of existing markets would lead to increased consumption of alkyltin compounds. By 1984, the overall consumption of alkyltin compounds in all areas could be in the range of 45 million pounds annually.

With respect to individual compounds, the methyl and butyltin isooctylmercaptoacetates and their blends should continue to be the star performers of the PVC heat stabilizers. These two systems have been the major materials for the past 2 to 3 years and should continue in this capacity during future years. The previous statement does not take into account the introduction of new materials which could capture a significant share of the market in specific areas. All other current alkyltin compounds play a rather secondary role to the two major systems and will probably continue this role in the future with their growth occurring as a result of increased PVC production rather than an increased share of the market.

In biocidal applications, bis(tributyltin) oxide (TBTO) and tributyltin fluoride (TBTF) are the only two compounds included in this study that have found usage in this general area. Specific applications are currently in antifouling paints and coatings, water and emulsion paint additives, and as additives to industrial cooling water. Spurred by the desire to decrease energy consumption, the antifouling paints and coatings area has seen increased activity during the past couple of years. Future consumption of alkyltin compounds in this area may well be in the form of alkyltin polymers as opposed to the present system of being a paint or coating additive. Increased consumption should also occur in the addition of TBTO to paints for the prevention of mold and mildew. A major future use of TBTO may be in the control of the disease, bilharzia. This disease currently affects millions in underdeveloped tropical countries. Its control is directly related to the control of freshwater snails, which serve as a carrier. At a research level, tests have shown that incorporation of TBTO into a vulcanized elastomer pellet, producing continual, low-level release of TBTO, provides effective control of the freshwater snail. Commercialization of this process could lead to significant increases in the consumption of bis(tributyltin) oxide in future years.

REFERENCES TO SECTION III

1. Anonymous, Tin Chemicals For Industry, Tin Research Institute, TRI Publication No. 447, Greenford, Middlesey (1972).

2. van der, Kerk, G. J. M., Conference on Tin Consumption, pp. 183-197, Paper No. 9, London, March 1972.

3. Sawyer, A. K., ed., Organotin Compounds, pp. 931-971, Marcel Dekker, New York (1971).

4. Piver, W. T., Environmental Health Perspectives, Issue 4, pp. 61-79, June 1973.

5. Smith, H. V., "The Development of Organotin Stabilizers," pp. 1-27, Tin Research Institute, Greenford, Middlesey, December 1959.

6. Hardwicke, J. E., Modern Plastics Encylopedia, 43(1A):438-441 (1966).

7. Neumann, W. P., "The Organic Chemistry of Tin," pp. 230-266, Interscience Publishers, New York (1970).

8. Evans, C. J., Tin and Its Uses, 87:13-17 (1971).

SECTION IV

MARKET INPUT-OUTPUT DATA

Cumulative data are presented for the selected alkyltin compounds during the time period 1965 to 1974. The data are considered in terms of production, importation, exportation, use patterns, and final products of these compounds.

PRODUCTION

The estimated total production quantities of each of the alkyltin compounds included in this study on an annual basis and for the 10-year time span (1965 to 1974) are shown in Table 1. In the United States, the four major manufacturers of alkyltin compounds are M&T Chemicals, Argus Chemical Company, Cincinnati Milacron Chemicals, and Cardinal Chemical Company. Smaller quantities of these compounds are produced by several other companies. In terms of total production over the 10-year span, the three major alkyltin compounds are the butyltin isooctylmercaptoacetates, methyltin isooctylmercaptoacetates, and dibutyltinbis(laurylmercaptide).

As shown in Table 1, the estimated total quantity of alkyltin compounds produced during the 10-year span was approximately 113 million pounds. Additional information concerning the specific alkyltin compounds may be found in Section V.

IMPORTATION

Importation of alkyltin compounds over the 10 years from 1965 to 1974 have generally not accounted for an appreciable percentage of the total overall production of these materials. Except for the importation of quantities of bis(tributyltin)oxide and tributyltin fluoride during the past 3 to 4 years, the only alkyltin compounds imported were either the tetraalkyltin or dialkyltin oxides, which are used as intermediates in the production of alkyltin heat stabilizers. No end product materials, for use as heat stabilizers, were imported. However, this would not exclude intracompany transfers of these materials. According to one manufacturing source, imports of the intermediates were 10 to 15% of the

Table 1. ESTIMATED ANNUAL U.S. PRODUCTION OF SELECTED ALKYLTIN COMPOUNDS (MILLION POUNDS PER YEAR)

Year	Bu IOMA	Me IOMA	Bu LM	Bu Maleate	Oct. IOMA	Oct. Maleate	Mixed metals	DBTDL	TBTO	TBTF	Total
1965	2.3	-	1.0	0.22	-	-	-	0.3	0.50	-	4.32
1966	4.6	-	1.0	0.22	-	-	-	0.3	0.50	-	6.62
1967	4.9	-	0.9	0.48	-	-	-	0.35	0.10	-	6.73
1968	6.2	-	0.9	0.52	0.16	0.02	-	0.4	0.10	-	8.30
1969	7.1	-	0.9	0.57	0.20	0.03	-	0.5	0.15	-	9.45
1970	8.3	0.7	1.1	0.59	0.32	0.05	-	0.6	0.17	0.01	11.84
1971	8.2	1.4	1.1	0.62	0.37	0.06	-	0.7	0.20	0.02	12.67
1972	10.5	2.9	1.3	0.26	0.56	0.08	-	0.7	0.25	0.05	16.60
1973	10.1	4.0	1.3	0.22	0.62	0.08	0.8	0.9	0.30	0.08	18.40
1974	9.3	4.5	1.3	0.21	0.37	0.07	0.5	1.0	0.50	0.12	17.87
Total	71.5	13.5	10.8	3.91	2.60	0.39	1.3	5.75	2.77	0.28	112.80

Appreviations:
- Bu IOMA = Butyltin isooctylmercaptoacetate + blends.
- Me IOMA = Methyltin isooctylmercaptoacetates + blends.
- Bu LM = Dibutyltin-bis(laurylmercaptide).
- Bu Maleate = Dibutyltin alkylmaleate esters.
- Oct. IOMA = Di(n-octyl)tin-S,S'-bis(isooctylmercaptoacetate).
- Oct. Maleate = Di(n-octyl)tin maleate polymers.
- DBTDL = Dibutyltin dilaurate.
- TBTO = Bis(tributyltin) oxide.
- TBTF = Tributyltin fluoride.

total U.S. production during the mid-1960's. After about 1966, U.S. production capacity increased and the need for imports decreased to approximately 5% or less of the total U.S. production. Following devaluation of the U.S. dollar in foreign money markets, it often became more economical to import intermediates than to produce them at the U.S. production facilities. Thus, depending upon the economic conditions, importation of intermediates increased somewhat during the past 2 to 3 years. The listing shown below gives the importation of alkyltin compounds during the years 1966 and 1972 to 1974. Imports for the intervening years between 1966 and 1972 were not recorded as it was during this period that imports constituted less than 5% of the total annual production of alkyltin compounds and were mainly tetrabutyltin and dibutyltin oxide.

Material	Quantity imported (pounds)[a/]			
	1966	1972	1973	1974
Dibutyltin dichloride	-	-	-	3,442
Dibutyltin oxide	344,580	719,794	248,349	71,400
Dioctyltin oxide	-	12,998	84,963	47,681
Bis(tributyltin) oxide	1,116	56,358	9,834	82,756
Tributyltin fluoride	-	9,140	4,940	-
Tributyltin chloride	-	2,320	2,900	-
Tetrabutyltin	-	25,000	-	144,029
Total	345,696	825,610	350,986	349,308

a/ Data from weekly listing in Chemical Marketing Reporter.

The originating countries for these imports were as follows: 1966 - Japan; 1972 - Japan; 1973 - Japan, Germany; 1974 - Japan, Germany. Imports from Japan originated from five ports: Yokohoma, Kobe, Nagoya, Tokyo, and Osaka; those from Germany all originated from Hamburg.

EXPORTATION

During the past 10 years, exportation quantities have remained in the range of 4 to 5% of the total annual U.S. production of the materials under study. Exportation has been only in the form of the end products, i.e., no intermediates such as tetraalkyltin, alkyltin oxides (except TBTO), etc. Countries to which exportation occurs include Taiwan, Singapore, and South American countries. The exportation figures stated above, which are estimates by U.S. manufacturers of organotin compounds, do not include any intracompany transfers of materials. Since the three

major companies have subsidiaries in foreign countries, considerable transfer of material occurs but the quantities of such material would be very difficult to determine.

USE PATTERNS

Utilization as heat stabilizers for rigid poly(vinyl chloride) consumes the vast majority of the total annual production of alkyltin compounds. Other areas in which these compounds are used include catalysts for polyurethane foam and RTV silicone elastomers, biocidal applications, poultry anthelmintics, and other miscellaneous applications. Consumption in each of these areas is overshadowed by the use as heat stabilizers. The estimated annual consumption in each of these areas is listed in Table 2.

Table 2. ESTIMATED ANNUAL U.S. CONSUMPTION OF SELECTED ALKYLTIN COMPOUNDS BY USE AREA (QUANTITIES IN MILLION POUNDS)

Year	PVC Heat stabilizer	Catalysts	Biocidal	Anthelmintic	Miscellaneous
1965	3.3	0.01	0.50	0.15	0.36
1966	5.6	0.03	0.50	0.16	0.33
1967	5.9	0.06	0.10	0.17	0.50
1968	7.4	0.10	0.10	0.18	0.52
1969	8.3	0.21	0.15	0.19	0.60
1970	10.6	0.28	0.18	0.21	0.57
1971	11.2	0.36	0.22	0.22	0.67
1972	15.5	0.41	0.30	0.23	0.16
1973	17.0	0.52	0.38	0.24	0.26
1974	16.2	0.62	0.62	0.24	0.19

The division between the various alkyltin compounds used in each of the areas is relatively straightforward. Of the materials listed in Table 1, only dibutyltin dilaurate, bis(tributyltin) oxide, and tributyltin fluoride are not used as heat stabilizers for rigid and semi-rigid poly(vinyl chloride). Dibutyltin dilaurate was used in past years as a heat stabilizer but its utility in this area had virtually ceased prior to 1965. Of those compounds used as heat stabilizers, the two dioctyltin compounds are used almost solely in PVC intended to contact food. All of the others are strictly for nonfood PVC usage in the United States. Dibutyltin dilaurate is used as a catalyst for polyurethane foam and RTV silicone elastomers and as a poultry anthelmintic. Bis(tributyltin) oxide

(TBTO) and tributyltin fluoride (TBTF) are used exclusively for biocidal applications, such as antifouling marine paints. Use areas such as fiber stabilization, exportation, and other miscellaneous areas employ relatively small quantities of alkyltin compounds. The utilization of each of the alkyltin compounds is discussed more fully in Section VIII.

FINAL PRODUCTS

Currently, the ultimate use of the majority of the alkyltin compounds in this study is in rigid and semi-rigid poly(vinyl chloride) materials. Some of the compounds also find use in PVC copolymers, such as with vinyl acetate or vinylidene chloride. Other products containing alkyltin compounds include marine antifouling paints and coatings, water or emulsion-based paints, anthelmintics for poultry, polyurethane foams, silicone elastomers, and other minor use areas.

In rigid and semi-rigid PVC applications, the major consumption area is in the pipe and conduit field. Since 1965, this area has annually consumed between approximately 40 to 60% of the total quantity of alkyltin compounds in the area of PVC. Alkyltin compounds are used exclusively to stabilize potable water pipe. All other types of rigid PVC pipe (nonpotable water pressure pipe, drain-waste-vent (DWV) pipe, conduit, and sewer and drain) are largely stabilized with alkyltin compounds. The largest market for this type of product is the construction industry. As would be expected, the injection molding of PVC pipe fittings is also another large use area for alkyltin compounds. Other areas of rigid and semi-rigid PVC that employ alkyltin compounds as heat stabilizers include rigid siding for buildings; extruded foam and nonfoam interior wall paneling trim; bottles for food and nonfood uses; clear, rigid and semi-rigid packaging items, such as blister packs; rigid sheets for patio covers, skylights, carports, etc.; rain gutters, downspouts, and other rainwater accessories; window frames; credit cards; industrial safety windows; and numerous other uses of rigid PVC material.

The largest use of alkyltin compounds in biocidal applications is in antifouling marine paints and coatings. At the present time, this is the sole use for tributyltin fluoride and the major use for bis(tributyltin) oxide (TBTO). Other current uses for TBTO are in water and emulsion paints to prevent mildew as well as to extend shelf-life and as an additive to industrial cooling water.

As an anthelmintic, dibutyltin dilaurate is formulated into tablets or granules for use with poultry. It is also formulated into the same two forms as a toxicidiostat for young turkeys. In addition to its anthelmintic usage, dibutyltin dilaurate is also used as a catalyst in polyurethane foams and in the room temperature vulcanization of silicone elastomers.

SECTION V

GENERAL MANUFACTURING PROCESSES

There are four companies who currently produce the majority of the organotin compounds under consideration in this study. These are: M&T Chemicals, Inc., a subsidiary of American Can Company; Argus Chemical Corporation, a subsidiary of Witco Chemical Corporation; Cincinnati Milacron Chemicals, Inc.; and Cardinal Chemical Company. Other companies, who produce organotin compounds primarily from purchased intermediates, include: Ferro Chemical Company; Tenneco Chemicals; and Synthetic Products Company, a division of Dart Industries. Further information regarding the various compounds manufactured by each company, production sites, capacities, and yearly production can be found in Section VI.

Recent review articles and the references contained therein[1,2] state that there are basically four commercial methods available for the preparation of the organotin compounds under consideration in this study. These are the: (a) Grignard method; (b) Wurtz method; (c) aluminum alkyl method; and (d) "direct synthesis" method. To our knowledge, only the Grignard and the so-called direct synthesis methods are presently being used to produce organotin compounds in the United States.

The Wurtz method has been used in previous years but it was discontinued in approximately 1965. This production procedure can present problems associated with flammability.

In Europe, the aluminum alkyl method is used for the commercial preparation of butyl and octyltin compounds but this method has never been adopted on a widespread scale in the United States. During the middle 1960's, Stauffer Chemical Company supposedly investigated the usage of this method but subsequently dropped plans to enter into production. Additional information concerning this method is presented in Section X, page 118.

The basic steps for the Grignard and direct synthesis methods are outlined below for the preparation of the alkyltin chlorides. Once the alkyltin chlorides have been produced, the subsequent steps leading to

the alkyltin esters are the same for both methods. The sole reason for separating the production flow diagram in this manner is to show that the formation of the oxide and, subsequently the ester, proceeds by the same process regardless of the initial method of preparing the alkyltin chloride. The basic reaction steps for each process are as follows:

1. Grignard method:

$$RCl + Mg \longrightarrow RMgCl \qquad R = C_4 \text{ or higher}$$

$$RMgCl + SnCl_4 \longrightarrow R_4Sn$$

$$R_4Sn + SnCl_4 \longrightarrow R_3SnCl + R_2SnCl_2 + RSnCl_3$$

2. Direct synthesis:

$$2RX + Sn \longrightarrow R_2SnX_2$$

$R = C_8$ or smaller

$X =$ halogen

3. Ester formation:

$$\begin{array}{ccc} R_ySnCl_{4-y} + NaOH & \longrightarrow & R_ySn \text{ oxide} \\ \text{Ester} \searrow & & \swarrow \text{Ester} \\ & R_ySn\ (\text{ester})_{4-y} & \end{array}$$

The reaction yields for each step of these processes is generally 95% or above.

From 1965 to 1970, the Grignard method was the basic method for the production of organotin compounds. Since 1970, many of the U.S. producers have been importing large quantities of tetrabutyltin and, in some cases, tetraoctyltin from Germany (Schering AG) and using this material for the redistribution reaction with stannic chloride. The German preparation occurs by the alkyl aluminum process and, depending upon the German mark/U.S. dollar (exchange) rate, can be purchased cheaper than it can be prepared by the Grignard process. Thus, the importation of the tetrabutyltin and tetraoctyltin was purely for economic reasons. In this respect, it has been confirmed, from sources in the manufacturing segment, that Schering AG is now searching for a plant in the United States or will build a plant to produce organotin compounds by the alkyl aluminum process for the U.S. market. For a more complete discussion of this process, see Section X.

During the period 1970 to 1975, the so-called direct process also came into commercial usage for the preparation of methyltin compounds. The basic step in this process was stated previously and a more complete discussion is presented later in this section.

THE GRIGNARD METHOD

This process is normally operated by the batch process. A generalized process flow diagram for the production of butyl and octyltin compounds is presented in Figure 1. All current producers of alkyltin compounds employ multipurpose plants similar to the one outlined for preparing butyl- and octyltin compounds. A process flow diagram for the preparation of bis-(tributyltin) oxide has been published by Glosky[7] and the basic parameters in his article have been incorporated into Figure 1.

The first step in the production of organotin compounds, the preparation of the Grignard reagent (RMgX), is very dependent upon the type of solvent employed; in some cases, the solvent is termed the coordinating solvent. Originally the Grignaxd base was prepared in the presence of toluene with suitable ethers, such as diethyl or dibutyl, used in various amounts to give the complex better solubility. The use of toluene ceased some years ago because it interfered with the yield and produced side products. In the preparation of butyltins, essentially all of the current producers employ cyclohexane as the solvent with small amounts of dibutyl ether added for stability and to reflux the magnesium. Butyl bromide is added as the catalyst or initiator. The use of other types of catalysts has been stated in the literature, especially the patent literature, but in actuality a bromide, such as butyl, is the principal type.

Because low levels of metallic contamination can provide an inhibiting effect on the reactions for the preparation of organotin compounds, the process equipment used in the manufacture is predominantly glass-lined, including reactors, heat exchangers, columns, piping, and storage facilities.

The process for the preparation of the Grignard base can be divided into (a) the initiation mix; (b) the reaction mix; and (c) the reaction. In the initiator or activator mix, butyl bromide, butyl chloride, and stannic chloride are added, with stirring, to cyclohexane to form a 50% solution. A small quantity of the initiating mix is added to the magnesium and the reaction started. Once the reaction begins, the remaining initiator mix, additional cyclohexane, and the reaction mix (a stoichiometric mixture of butyl chloride and stannic chloride) are added. The total quantity of cyclohexane solvent is such to provide about a 10% concentration of magnesium in the final reaction mixture. Initially the temperature of

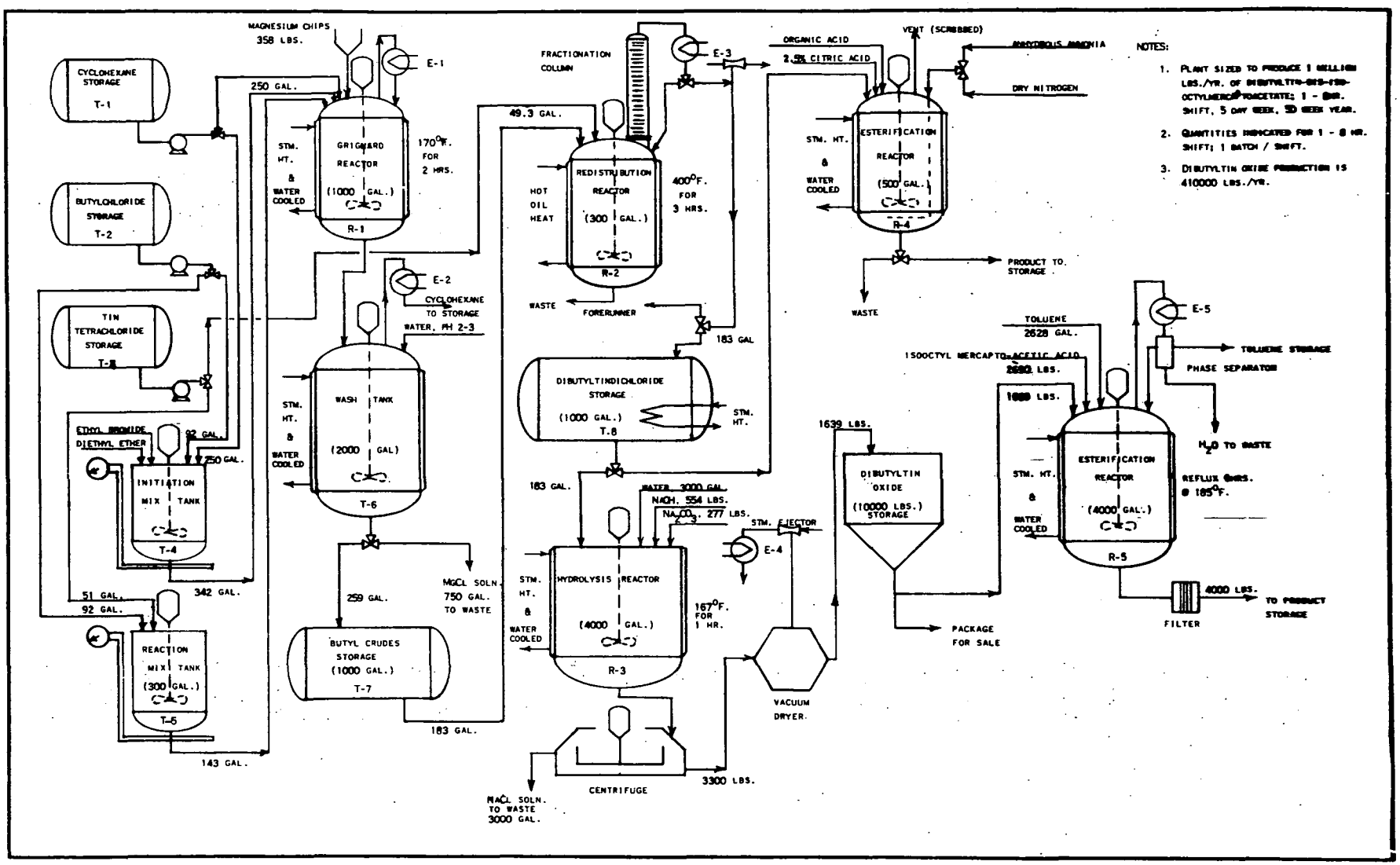

Figure 1. Production and Waste Flow Diagram for Alkyltin Compounds.

the reaction mixture rises to approximately 100°F (31°C) and, as the reaction progresses, continues to about 170°F (71°C) where it is held for 2 hr. At the end of about 2 hr, the reaction mixture is cooled and pumped to the extractor. The final product is a mixture of tetrabutyltin and other butyltin chlorides. With proper handling, tetrabutyltin can be produced in a 95 to 98% yield. One controlling factor in the yield is the purity of the butyl chloride. A contamination of 1 to 2% butyl alcohol can decrease the rate of reaction and lower the yield by as much as 10%.

In the extractor the reaction mixture is washed with dilute acid, likely hydrochloric, at a pH of 2 to 3, to remove the magnesium chloride and unreacted stannic chloride. Two phases form and the water phase is removed for disposal. The cyclohexane solvent is then flashed off and returned to storage.

After analysis of the crude mixture, it is pumped to a redistribution reactor where a stoichiometric quantity of stannic chloride is added. Through 1970, most manufacturers attempted to achieve a maximum purity of 98% dibutyltin dichloride. However, it was found that small quantities of monobutyltins were very desirable, particularly for initial color control in heat stabilizers. Consequently, the redistribution reaction is currently carried out to yield 75 to 85% dibutyltin dichloride and 15 to 25% monobutyltin trichloride.

Upon addition of the stannic chloride, the reaction mixture is heated to approximately 400°F (200°C) for 2 to 3 hr. Samples of the reaction mixture are taken periodically and analyzed to increase the proper ratio of the products. After the reaction is complete, the mixture is distilled under a vacuum of about 0.5 mm. The forerunner is removed and recycled for further alkylation. The monobutyl dibutyltin chloride mixture is then distilled and either pumped to storage, reacted with alkali to form the oxide, or reacted directly to form the ester. Tributyltin chloride is recycled to the redistribution reactor.

Octyltins: For the preparation of octyltins, the process is essentially the same except that the solvent is a mixture of cyclohexane and tetrahydrofuran (THF). THF is a very good coordinating solvent but is rather expensive and very difficult to recover so only a sufficient quantity is used to complex the magnesium. Aluminum chloride is the catalyst for octyltins. Prior to the use of the cyclohexane-THF solvent mixture, reaction yields were only in the range of 60 to 75%. With the modification of the solvent mixture, the reaction yield has improved to perhaps 85%. However, this lower yield, compared to the butyltins, is the reason that octyltins are more expensive as produced by the Grignard process; the Schering alkylaluminum process is cheaper.

Methyltins: Until mid-1972 M&T Chemicals was producing methyltins by various processes. Although the processes yielded high purity material with low trimethyltin content, they were discontinued due to economic considerations. A direct tin process was employed in early 1973. In 1974 the production of methyltins was voluntarily ceased due to the environmental effects described on page 115.

THE DIRECT SYNTHESIS

There are two methods for the direct synthesis process: (a) the batch process;[4] and (b) the continuous process.[5] Since the continous process is quite new, it is not known whether it is practiced on a commercial scale or not. For either method, the only materials produced commercially are the dimethyltin homologs. This lack of commercial adaptability of the direct batch process is due to the slower reaction rate of the butyls and octyls.

At the present time, only two of the current producers of organotin compounds use the direct process, Cincinnati Milacron and Argus Chemical. The process used by Cincinnati Milacron[4] is a batch process with a powdered tin using a phosphonium catalyst, more specifically, probably methyltriphenylphosphonium bromide. A reaction yield of 90 to 95% is obtained with relatively small quantities of mono- and trimethyltin chlorides as by-products. The process must be directed to give the highest mono- and dimethyltin chloride content as the trimethyltin chloride is quite toxic (LD_{50} = 20)[1] and obviously an undesirable contaminant. Argus Chemical uses basically the same process but instead of finely divided and powdered tin, they utilize tin shot or pellets. A phosphonium type catalyst, similar to that stated above, is used.

Batch Process

According to the British patent,[4] a typical reaction for the batch process involves heating mossy tin metal (1.0) and tetrabutyl phosphonium iodide (0.2) to 150 to 160°C and gassing with methyl chloride (3.0 to 4.0) for 10 hr. The numbers in parentheses represent molar ratios. At the end of this time period, the reaction mixture is distilled under vacuum (10 mm Hg) to a pot temperature of 220°C. The distillate is dissolved in boiling hydrocarbon (isooctane), cooled to room temperature, and the dimethyltin dichloride (0.6) filtered. After distillation of the isooctane from the filtrate, a residue of mixed (mono- and tri-) methyltin chlorides-iodides remains, which is recycled to the reactor and added to the distillation residue of dimethyltin dichloride complexed with the phosphonium iodide catalyst. The isooctane is also recycled. Mossy tin (1.0) is added to the combined filtrate residue and distillation residue and the mixture

gassed with methyl chloride for 10 hr at 150 to 160°C. Distillation, filtration, and recycling are repeated. The entire procedure can be repeated many times without loss of catalyst potency or the formation of further by-products.

A source closely associated with the commercial manufacturing processes has provided another description of the batch process. In this process, a reactor is charged with mossy, foil, or small pellet tin (0.25), and KI (0.02). Methyl chloride (1.0) and the catalyst (0.01), e.g., methyltriphenyl phosphonium bromide, are added simultaneously under pressure and the mixture heated, with stirring, for 2 hr at 183 to 193°C. Again, the figures in parentheses are molar ratios. The success of this reaction is dependent upon the use of very finely divided tin and efficient stirring so that the tin is constantly exposed to the methyl chloride. At the end of the heating period, the reaction mixture is distilled at atmospheric pressure to give monomethyltin trichloride (0.01), dimethyltin dichloride (0.22), and trimethyltin chloride (0.006) for a total reaction yield of 94.4% based on tin. The unreacted methyl chloride is recycled.

Continuous Process

Hechenbleikner[5/] has recently patented a continuous process for the production of alkyltin halides with the alkyl groups having less than five carbon atoms. The method consists of packing a long, small diameter (about 1 in.) stainless steel reaction column with granular tin and filling the small spaces between the granules with liquid catalyst (tributylmethylphosphonium iodide). After heating the column to 150°C, methyl chloride is pumped into the bottom of the column. As the methyl chloride rises in the column, it reacts with the tin to form the methyltin chlorides. At the top of the reaction column, the mixture of methyltin chlorides and liquid catalyst pass to a distillation column, which is maintained at 180°C and 10 mm Hg pressure. In the distillation column, the liquid catalyst, containing some complexed methyltin chloride, is separated from the methyltin chlorides. The methyltin chlorides, being more volatile, are distilled to a product holding tank; the liquid catalyst decends to the bottom of the distillation column and is pumped to the bottom of the reaction column for recycling. Any methyl chloride present in the product holding tank is stripped and recycled to the reaction column. After 5 hr of operation, the process becomes a steady state with essentially all of the methyl chloride being converted to the methyltin chlorides. During the process, additional tin is added at the top of the reactor column. The yield, based on tin, is essentially quantative after the steady state is established. No analysis of the reaction products with respect to the distillation between mono-, di-, and trimethyltin chlorides is stated.

ESTER FORMATION

From this point forward, the alkyltin chlorides are treated in the same manner regardless of the initial method of preparation, i.e., Grignard or direct synthesis. Commercially, alkyltin chlorides are used in the preparation of about 75 to 80% of the organotin compounds, particularly the mercaptoesters. Conversion of the butyl- or dioctyltin dichlorides to the oxide, by the major manufacturers, was only done for commercial reasons, i.e., resale to another heat stabilizer producer or for the production of carboxylate-type stabilizers, such as dibutyltin dilaurate or dibutyltin isooctylmaleate.

From the Dichloride (and Trichloride)

The formation of the alkyltin mercaptoesters is accomplished by a relatively straightforward reaction of the appropriate alkyltin chloride and mercaptoester with provisions for the immediate removal of the hydrogen chloride by-product.[6] A 2:1 molar ratio of isooctylmercaptoacetic acid to dibutyltin dichloride are combined and heated to about 35°C. Anhydrous ammonia is slowly added below the surface. The resulting exothermic reaction raises the temperature to approximately 80°C; this is followed by a decrease in temperature to 50°C, which denotes that the reaction is complete. When the temperature drops, the flow of NH_3 is ceased and nitrogen bubbled through the reaction mixture to remove excess ammonia. After cooling, the alkyltin ester is washed with an aqueous 2.5% citric acid solution to remove any residual ammonia and the ammonium chloride. The organic layer is separated, heated to 120°C to remove any residual water, filtered, and pumped to storage tanks for packaging. The aqueous layer is directed to the waste treatment system. In this process, other alkaline substances, such as sodium hydroxide, bicarbonate, or carbonate, can be used. The removal of residual water is very important, otherwise precipitation can occur, which is highly undesirable as the precipitate is a poor stabilizer and affects the efficiency of the overall product. Methyltin chlorides are not converted to the oxides and all esters of these compounds are prepared in this manner.

From the Oxide

As stated previously, the oxide is prepared only for the following reasons: (a) resale; (b) preparation of nonsulfur esters; or (c) if the oxide has a specific end use (e.g., bis(tributyltin)oxide).

Conversion of the alkyltin chloride to the corresponding oxide is effected by treatment of the chloride with a 10% aqueous solution of NaOH at 75 to 80°C with stirring.[8] Reaction times are generally about 1 hr. If the resultant oxide is a solid, a very small quantity of a detergent,

such as Santomerse, is added to prevent caking of the solid and aid in ease of handling, the slurry is centrifuged to separate the solid from the saline solution, vacuum dried, and transferred to bulk storage. The saline solution waste material is generally discharged directly into the plant sewer system. If residual alkyltin chloride concentrations are present, the alkyltin chlorides would probably be further neutralized.

Preparation of the alkyltin ester is accomplished by mixing stoichiometric quantities of the alkyltin oxide and the appropriate ester (or acid) in toluene. The reaction mixture is refluxed in the toluene for 6 to 8 hr, depending upon the ester or acid used. Water produced during the reaction is azeotropically distilled from the reaction mixture and is used as a measure of the progress of the reaction. When a stoichiometric quantity of water has been removed, the reaction is complete. The reaction mixture is transferred to a still, where the toluene is stripped and recycled and the alkyltin ester is pumped to storage tanks for shipment.

For those processes in which the oxide is purchased to produce sulfur-containing esters, the reaction is usually done in situ, i.e., without a solvent, and proceeds very quickly. Water, produced as a by-product, must be removed from the reaction mixture, as well as the final product, to prevent precipitation. Wastewater from the reaction is normally discharged into municipal sewer lines. The alkyltin ester is pumped to storage tanks to await packaging and shipment.

MANUFACTURING COSTS

The manufacturing facilities of current producers of organotin compounds are multipurpose plants capable of producing a variety of materials (see Figure 1). Since metal impurities are undesirable in the finished product, all reactors, wash tanks, storage tanks, and weighing tanks are glass-lined. All heat exchangers, fractionating columns, centrifuges, vacuum dryers, and filters are constructed from either stainless steel or stainless clad steel.

Using current major equipment costs, it has been calculated that the capital value of a new plant capable of producing 1 million pounds of alkyltin heat stabilizer would be slightly less than $3 million. This plant investment would include major equipment, its installation, and all necessary piping, electrical wiring, instrumentation, a building to house the facility, and a 1/2 acre plant site. A manufacturer of organotin compounds has estimated that a 1 million pound production site, with all ancillary facilities, would cost approximately $5 million. This estimate is based on a larger plant site and includes waste treatment facilities, which were not included in the $3 million figure.

Cost estimates have been calculated to produce 1 lb of a common alkyltin heat stabilizer, dibutyltin-S,S'-bis(isooctylmercaptoacetate), in the production facility shown in Figure 1. Based on the current raw material prices shown below, the cost per pound based solely on raw materials is $1.934.

Butyl chloride	45.0¢/lb	Isooctylmercaptoacetic acid	100.0¢/lb
Stannic chloride	210.4¢/lb	Cyclohexane	13.9¢/lb
Magnesium chips	92.0¢/lb	Toluene	8.6¢/lb
50% Sodium hydroxide	8.0¢/lb	Ethyl bromide	61.5¢/lb
Sodium carbonate	2.8¢/lb	Diethyl ether	49.6¢/lb

Using utility costs of $2.00/lb for steam, $1.00/1,000 cu ft for gas, and $0.02/kw-hr electricity, an additional cost of 0.775¢/lb is derived. Assuming a total labor cost, including a plant manager, of $100,000/year, an additional 10.00¢/lb is added to the product.

The total cost per pound of product can be summarized as follows:

Cost item	Price/lb
Raw materials	$1.9340
Utility costs	0.0078
Labor costs	0.1000
Total	$2.0418 = $2.04

The original price was $1.934/lb, based solely on raw materials. If the additional charges for utilities and labor of $0.10775/lb are added, the total cost is $2.0418/lb of the dibutyltin isooctylmercaptoacetate. This cost is exclusive of the prorated original plant investment cost. The current selling price for a typical butyltin isooctylmercaptoacetate of this type is approximately $2.30/lb.

ENVIROMMENTAL MANAGEMENT

In this subsection, the available information is presented with respect to the disposal methods, losses, and reclamation process, if any, for each manufacturer of organotin compounds. Letters were sent to nine manufacturers or sellers of organotin compounds. The EPA regional offices associated with each manufacturing site were contacted with respect to NPDES discharge permits that may have been issued to the respective companies. The results of the written request and the search for discharge permits are summarized in the following discussion.

Argus Chemical Company: The production facility at Taft, Louisiana, utilizes deep-well disposal methods for the effluents from their methyltin production facilities. Although a NPDES discharge permit was issued for effluent disposal into the Mississippi River, Argus states that all of the effluent from the methyltin facility is being discharged to the deep well. According to this manufacturer, the only effluent consists of a brine solution resulting from the neutralization with sodium hydroxide of the hydrogen chloride evolved during ester formation with dimethyltin dichloride. No trimethyltin by-products are present in the aqueous effluent. The only other by-product of the reaction process is the spent phosphonium catalyst, which is present as a thick semisolid. This material is periodically cleaned from the reactor, stored and removed by a contract hauler.

Cardinal Chemical Company: Received no response on waste management procedures. No record of any NPDES discharge permit.

Cincinnati Milacron Chemicals, Inc.: Mr. R. C. Witman reported in a letter that any description of effluent handling involves proprietary information concerning their manufacturing techniques. He stated that, in general, their final effluents are handled by outside disposal services, municipal sewers, or settling ponds. No wastes are discharged directly to rivers or other waterways and that their sewer effluent is monitored periodically by municipal and state officials. There is no record of any NPDES discharge permit.

Ferro Chemical Company: Ferro purchases alkyltin oxide and tetrabutyltin intermediates for conversion to the esters at their Bedford, Ohio, facility. Dr. Larry Wilson stated that waste effluent streams are handled by two methods depending upon the chemical nature of the effluent: (a) contract disposal services; and (b) waste treatment facilities to produce a burnable component and a component discharged to the sewer system. Some hydrolyses products of the ester, e.g., mercaptoacetic acid, may be present but probably would not be detected as a component of the "Organic" phase due to their water solubility. He also stated that for those companies using alkyltin chlorides to produce the alkyltin esters, the HCl by-product is generally scrubbed, neutralized with a sodium hydroxide solution and discarded into the sewer system as a saline solution.

Interstab Chemicals, Inc.: A letter from Mr. A. R. Wilson stated that they are presently reentering the organotin market but on a limited scale and that, since they are not basic in tin chemicals, no disposal or effluent problem exists at the present time.

M&T Chemicals, Inc.: The Carrollton, Kentucky, facility produces compounds only by the Grignard method. In addition to the alkyltin compounds of interest to this report, tricyclohexyl and triphenyltin compounds are also manufactured at this site. At the present time, the site has a settling pond and an aerated lagoon to treat the 0.75 MGD of wastewater. New facilities for a wastewater treatment process, consisting of the following unit operations: equalization, neutralization, clarification, biological oxidation, and final settling, are presently under construction. The future facility will treat only 0.25 MGD as several direct uses of cooling water will be replaced with indirect, surface heat exchangers to reduce the volume of wastewater.

Although the waste materials associated with the production of alklytin compounds are primarily water-borne effluents, some solid waste products are generated. Suspended tin solids result from the hydrolysis of stannic chloride during the initial wash of the tetraalkyltins and from the centrifuge process during the formation of alkyltin oxides from the corresponding alkyltin chloride. These suspended tin solids are settled, stored, and periodically shipped by barge to a tin smelter. During the wash of the tetraalkyltins, some magnesium may also be included in the suspended solids. It is not separated from the tin solids to be sent to the smelter.

In the production of tetraoctyltins, aluminum chloride is used as the catalyst. During the wash of the tetraoctyltin, the aluminum precipitates as hydrated aluminum oxides. This thick, white mass is disposed in a landfill.

All other waste materials resulting from the manufacturing process are water-borne effluents. Acidic and caustic materials, produced either as by-products or used as processing material, are neutralized prior to their introduction into the settling pond and aerated lagoon. M&T estimates that approximately 50,000 lb/year of organotin compounds are discharged in the raw waste load. This figure includes tricyclohexyl and triphenyltin waste compounds from other production processes.

Mooney Chemicals, Inc.: Mooney does not manufacture organotin compounds. Their products are strictly resale items.

Pennwalt Industrial Chemicals: Declined to comment on waste management procedures. No record of any NPDES discharge permit.

Synthetic Products Company: They stated that they would not provide any information on waste management procedures. No record of any NPDES discharge permit.

R. T. Vanderbilt Company, Inc.: Declined to comment on waste management procedures. No record of any NPDES discharge permit.

REFERENCES TO SECTION V

1. Bokranz, A., and H. Plum, Fortschritte der Chem. Forschung, 16:366 (1971).

2. Neumann, W. P., Ed., The Organic Chemistry of Tin, Interscience Publishers, New York (1970).

3. Kirk, R. E., and D. F. Othmer, Eds., Kirk-Othmer Encyclopedia of Chemical Technology, 2nd Ed., Interscience Publishers, New York (1969).

4. Molt, K. R., and I. Hechenbleikner, British Patent 1222642 (1971).

5. Hechenbleikner, I., U.S. Patent 3792059 (1974).

6. Mack, G. P., U.S. Patent 3115509 (1963).

7. Glosky, C. R., Chem. Eng. Prog., 58(9), 71 (1962).

8. Metal and Thermit Corporation, British Patent 797976 (1958); CA., 53, 3061 (1959).

SECTION VI

PROCESS TECHNOLOGY

In this section, each of the alkyltin compounds studied during this task is discussed individually with respect to the various aspects of its manufacturing process and, for heat stabilizers, a tabular summary is presented with regard to the usages. Since all of the alkyltin compounds under consideration are manufactured by one of two processes, no detailed presentation is given with regard to the specific production process for an individual material. A detailed discussion of the general manufacturing processes was presented earlier in Section V.

Information relative to each alkyltin compound which is presented in this section includes the manufacturing company's corporate address and production site, years of production and production figures, specific preparative reaction, raw materials, type or grade of products, and transportation and handling information.

GENERAL PRODUCTION CAPACITY

The estimated capacity for each manufacturer of alkyltin compounds is given in Table 3. Since all of the Grignard production facilities are multipurpose plants, a production capacity for a specific ester cannot be provided but will vary considerably dependent upon demand for a specific ester during the year. Under the heading of production years, the year 1965 does not denote that the facility began production in that year but rather that 1965 was the earliest year for the purposes of this report.

The estimated production capacity for M&T Chemicals of 20 million pounds per year (9.1×10^3 MT) takes into consideration their capacity for the production of biocidal agricultural chemicals. If the capacity for these materials is eliminated, a figure of 15 million pounds per year (6.8×10^3 MT) would be applicable to the manufacture of compounds used as heat stabilizers. M&T produces all of their materials by the Grignard process.

Table 3. ESTIMATED PRODUCTION CAPACITIES[a/]

Manufacturer	Site	Production years	Estimated capacity[b/]
M&T Chemicals, Inc.	Carrollton, Kentucky	1965-present	20
Cincinnati Milacron Chemicals, Inc.	Reading, Ohio	1965-present	15
Argus Chemical Company	Brooklyn, New York Taft, Louisiana	1966-present 1970-present	8
Cardinal Chemical Company	Columbia, South Carolina	1965-present	5
Synthetic Products Company	Cleveland, Ohio	1971-present	1
Tenneco Chemicals Company	Piscataway, New Jersey	Late 1969-present	1
Ferro Chemical Company	Bedford, Ohio	1971-present	1.5
R. T. Vanderbilt	Norwalk, Connecticut	1974-present	< 0.5

a/ Production capacities for alkyltin end products only.
b/ Current capacity in million pounds per year.

Argus Chemical Company has transferred the majority of their production capacity to the facility at Taft, Louisiana. The remaining facilities at the Brooklyn, New York, site are primarily for the production of dibutyltin oxide and presently represent a capacity of 0.5 to 1 million pounds per year. Within the past year, Argus announced a direct methyltin process at their Taft production site.

Ferro Chemical Company produces organotin compounds from the alkyltin oxide or tetrabutyltin intermediates purchased from sources in the U.S. or foreign countries. They react the intermediates with appropriate other materials to produce the alkyltin esters. This same information also applies to R. T. Vanderbilt, except that it is not known from which producer they purchase their materials. They are basically resellers but do have a very small capacity for making organotins.

Cincinnati Milacron Chemical is the largest producer of methyltin compounds and thus their production facilities are primarily centered on the direct process. However, they have some capacity for production of alkyltin compounds other than methyltins.

Synthetic Products Company produces all of their compounds from the oxide, which they purchase either in the U.S. or from Germany. They may purchase some compounds for resale.

Tenneco Chemicals Company produces organotin compounds basically for captive uses but some materials are for resale.

In addition to the manufacturers, there are some companies who strictly purchase materials for resale. Two of these companies are Stecker Chemical Company, Ho-Ho-Kus, New Jersey, and Mooney Chemical Company, Franklin, Pennsylvania. Stecker purchases and resells only biocidal compounds, whereas Mooney handles basically heat stabilizer compounds. Both of these companies are very minor factors in the overall market.

SPECIFIC ORGANOTIN COMPOUNDS

In this subsection, each organotin compound will be reviewed with respect to its method of production, manufacturers, raw materials utilized, waste products, trade names and production quantities.

With respect to the trade names of the numerous alkyltin compounds, there are a few basic compounds with the remainder being blends or variations of these materials. The basic compounds and their respective trade names are shown in Table 4. In this listing, only those companies considered to be major factors in the market are listed; trade names for materials produced by lesser companies are given in the discussion of the individual compounds.

Table 4. TRADE NAMES OF COMMON ALKYLTIN COMPOUNDS

Chemical	Producers			
	M&T	Argus	Cincinnati Milaceon	Cardinal
Butyltin alkylmercaptoacetate	THERMOLITE 31 THERMOLITE 66 THERMOLITE 73 THERMOLITE 310	MARK 292 MARK 534B MARK 649A	ADVASTAB TM-180 ADVASTAB TM-220	No. 11 CC-54 CC-78
Dibutyltin bis (laurylmercaptide)	THERMOLITE 20	MARK A	ADVASTAB TM-918	CC-10
Dibutyltin maleate ester	THERMOLITE 25 THERMOLITE 26	MARK 275 MARK 693	ADVASTAB T-52N ADVASTAB T-150	CC-200
Dibutyltin dilaurate	THERMOLITE 12	MARK 1038	DBTDL	CC-1
Methyltin alkylmercaptoacetates	THERMOLITE 106	MARK 1900 MARK 1920	ADVASTAB TM-181 ADVASTAB TM-181FS ADVASTAB TM-387	-
Di(n-octyl)tin-S,S'-bis(isooctylmercaptoacetate)	THERMOLITE 831	MARK OTM	-	OCTYL 11
Di(n-octyl)tin maleate polymer	THERMOLITE 813	MARK OTS	-	-
Bis(tributyltin)oxide	BioMET TBTO	-	CAR-BAN T-O	-
Tributyltin fluoride	BioMET tributyltin fluoride	-	-	-

In addition to those compounds shown in Table 4, there are numerous other materials offered by each company. Such materials are blends of the basic compounds with antioxidants, synergists, extenders, and other additives. For compounds having alkyl ester groups, quantities of esters with larger or smaller alkyl groups may be added to change the final viscosity of the mixture or to slightly alter the properties of the blend to satisfy the requirements of specific customers. All of the blending components and the actual composition of the final mixture are considered proprietary by each manufacturer. In materials such as high efficiency heat stabilizers, other organotin compounds, i.e., butylthiostannoic acid or anhydride (BTSA) and dibutyltin sulfide, are used in combination with the basic compounds to increase the tin content, improve performance, and modify the physical properties. Again, the actual composition of these mixtures are proprietary with each company.

BUTYLTIN ISOOCTYLMERCAPTOACETATES

$$(C_4H_9)_x\ Sn(SCH_2CO_2C_8H_{17})_y$$

$$x = 1 \text{ or } 2 \qquad y = 2 \text{ or } 3$$

Production Quantities

Year	M&T	Argus	Cincinnati Milacron	Cardinal	Total quantity (million lb)
1965	1.5	-	0.3	0.5	2.3
1966	1.8	0.5	1.1	1.1	4.6
1967	2.1	0.6	1.1	1.1	4.9
1968	2.7	0.7	1.8	1.0	6.2
1969	3.2	0.7	2.2	1.0	7.1
1970	3.6	0.7	3.0	1.0	8.3
1971	3.6	0.7	2.9	1.0	8.2
1972	5.5	1.0	2.0	2.0	10.5
1973	5.5	1.2	1.0	2.4	10.1
1974	5.4	1.1	0.5	2.3	9.3

Butyltin isooctylmercaptoacetates are usually mixtures of the mono- and dibutyl compounds. The ratio is variable depending upon the specific customer and the specific use of the material; however, the most common mono:di ratio is 40:60. Other alkyl groups are often used in place of the isooctyl to change the viscosity of the final mixture.

Manufacturers

Manufacturer	Corporation office site	Production site	Years produced
M&T Chemicals, Inc.	Rahway, New Jersey	Carrollton, Kentucky	1965-present
Argus Chemical Corporation	Brooklyn, New York	Brooklyn, New York Taft, Louisiana	1966-1969 1970-present
Cincinnati Milacron	Reading, Ohio	Reading, Ohio	1965-present
Cardinal Chemical Company	Columbia, South Carolina	Columbia, South Carolina	1965-present

Production Process

$$C_4H_9SnCl_3 + 3\ HSCH_2CO_2C_8H_{17} \longrightarrow C_4H_9(SCH_2CO_2C_8H_{17})_3 + 3\ HCl$$

$$(C_4H_9)_2\ SnCl_2 + 2\ HSCH_2CO_2C_8H_{17} \longrightarrow (C_4H_9)_2(SCH_2CO_2C_8H_{17})_2 + 2\ HCl$$

The weight ratio of the starting materials are adjusted to produce a final product having a 60:40 weight ratio of di:mono.

Required Raw Materials

Basis: 2,000 lb of 60:40 weight ratio di:mono butyltin isooctylmercaptoacetate

$C_4H_9SnCl_3$: 286 lb

$(C_4H_9)_2SnCl_2$: 567 lb

$HSCH_2CO_2C_8H_{17}$: 1,391 lb

Waste Material Produced

HCl: 244 lb

Energy Consumed

Gas: 1,000 cu ft; Steam: 6,000 lb; Electricity: 125 kw-hr

Price History

Year	Price/lb ($)	Value (million dollars)
1965	2.25	5.175
1966	2.25	10.350
1967	2.00	9.800
1968	1.80	11.600
1969	1.80	12.780
1970	1.75	14.525
1971	1.67 (avg.)	13.694
1972	1.40	14.700
1973	1.50	15.150
1974	2.06 (avg.)	19.158

Trade Names (not included in Table 4)

Synthetic Products, Inc.: 1001

Tenneco Chemicals: Nuostabe V-1562, V-1902

Ferro Chemical Company: Ferro 803, 807, 814, 820, 832, 835, 837, 840, 871, 873, 876A, 877

Physical Properties

Physical form: Clear pale yellow liquid

Specific gravity at 25°C: 1.115 to 1.135

Refractive index at 25°C: 1.5071

Estimated Consumption By Use Area (million pounds)

Year	Pipe and conduit	Injection molding	Siding and profiles	Bottles	Sheet and film	Total
1965	1.08	0.20	0.54	0.10	0.35	2.27
1966	3.05	0.19	0.72	0.19	0.42	4.57
1967	2.91	0.37	0.85	0.29	0.49	4.91
1968	3.67	0.47	1.01	0.39	0.65	6.19
1969	3.65	0.68	1.14	0.56	1.10	7.13
1970	3.62	0.88	1.69	0.78	1.33	8.30
1971	3.05	1.00	1.97	0.72	1.43	8.17
1972	4.25	1.12	2.61	0.88	1.59	10.45
1973	3.68	1.26	2.68	0.94	1.54	10.10
1974	3.32	1.08	2.41	0.92	1.53	9.26

DIBUTYLTIN-BIS(LAURYLMERCAPTIDE)

$$(C_4H_9)_2Sn(SC_{12}H_{25})_2$$

Production Quantities

Year	M&T	Argus	Cincinnati Milacron	Cardinal	Total quantity (million lb)
1965	0.7	-	0.1	0.2	1.0
1966	0.5	0.1	0.1	0.3	1.0
1967	0.4	0.1	0.2	0.2	0.9
1968	0.4	0.1	0.2	0.2	0.9
1969	0.4	0.1	0.2	0.2	0.9
1970	0.4	0.1	0.2	0.4	1.1
1971	0.4	0.1	0.1	0.5	1.1
1972	0.5	0.1	0.1	0.6	1.3
1973	0.5	0.1	-	0.7	1.3
1974	0.5	0.1	-	0.7	1.3

Manufacturers

Manufacturer	Corporation office site	Production site	Years produced
M&T Chemicals, Inc.	Rahway, New Jersey	Carrollton, Kentucky	1965-present
Argus Chemical Corporation	Brooklyn, New York	Brooklyn, New York Taft, Louisiana	1966-1969 1970-present
Cardinal Chemical Company	Columbia, South Carolina	Columbia, South Carolina	1965-present
Cincinnati Milacron	Reading, Ohio	Reading, Ohio	1965-1972

Production Process

$$(C_4H_9)_2SnCl_2 + 2\ C_{12}H_{25}SH \longrightarrow (C_4H_9)_2Sn(SC_{12}H_{25})_2 + 2\ HCl$$

Required Raw Materials

Basis: 2,000 lb of dibutyltin bis(laurylmercaptide)

$(C_4H_9)_2SnCl_2$: 956 lb

$C_{12}H_{25}SH$: 1,274 lb

Waste Material Produced

HCl: 230 lb

Energy Consumed

Gas: 1,000 cu ft; Steam: 6,000 lb; Electricity: 125 kw-hr

Price History

Year	Price/lb ($)	Value (million dollars)
1965	2.25	2.250
1966	2.25	2.250
1967	2.25	2.025
1968	2.25	2.025
1969	2.25	2.025
1970	2.25	2.475
1971	2.25	2.475
1972	2.50	3.250
1973	2.60	3.380
1974	2.75	3.575

Trade Names (not included in Table 4)

Ferro Chemical: Ferro 822

Physical Properties

Physical form: Clear pale liquid

Specific gravity at 25°C: 1.006

Refractive index at 25°C: 1.498

Viscosity at 25°C: 22 centipoises

Estimated Consumption by Use Area (million pounds)

Year	Pipe and conduit	Injection molding	Siding and profiles	Total
1965	0.88	0.03	0.10	1.01
1966	0.87	0.03	0.11	1.01
1967	0.75	0.06	0.11	0.92
1968	0.74	0.08	0.12	0.94
1969	0.63	0.12	0.15	0.90
1970	0.70	0.16	0.27	1.13
1971	0.53	0.19	0.37	1.09
1972	0.56	0.22	0.52	1.30
1973	0.55	0.25	0.54	1.34
1974	0.64	0.20	0.46	1.30

DIBUTYLTIN MALEATE ESTERS

$$(C_4H_9)_2Sn(O\overset{O}{\overset{\|}{C}}CH{=}CH\overset{O}{\overset{\|}{C}}OR)_2$$

$R = C_8H_{17}$ is the most common, however, other alkyl groups ranging from C_2 to C_{12} are used.

Production Quantities: Octylmaleate ester

Year	M&T	Cincinnati Milacron	Cardinal	Argus	Total quantity (million lb)
1965	0.04	-	-	-	0.04
1966	0.04	-	-	-	0.04
1967	0.05	-	-	-	0.05
1968	0.03	0.03	0.01	0.01	0.08
1969	0.04	0.04	0.02	0.01	0.11
1970	0.04	0.04	0.02	0.01	0.11
1971	0.04	0.04	0.02	0.01	0.11
1972	0.05	0.04	0.02	0.01	0.12
1973	0.05	0.04	0.02	0.01	0.12
1974	0.04	0.04	0.02	0.01	0.11

Other alkylmaleate esters have been produced from 1965 to 1974. Aside from the octylmaleate esters, probably the most common alkylmaleate esters were the C_3, C_4 and C_{12} groups. It is believed that each of these materials is produced by only one company so that specific information is difficult to obtain. MRI estimates the following production years and annual quantities for each of the alkylmaleates: C_3H_7 (1965 to 1971, 50,000 to 330,000 lb); C_4H_9 (1965 to 1974, 50,000 to 100,000 lb); $C_{12}H_{25}$ (1967 to 1974, 40,000 to 90,000 lb). Dibutyltin maleate was also produced in small quantities (25,000 to 50,000 lb annually) from 1965 to 1971. All of the above dibutyltin alkylmaleates, except for octyl, find usage in semi-rigid, calendered PVC applications, such as fiber stabilization, flexible plastic strips, etc. The estimated total annual production of these alkylmaleate esters have been included with the data for the octylmaleates and presented in Table 1.

Manufacturers

Manufacturer	Corporation office site	Production site	Years produced
Argus Chemical Corporation	Brooklyn, New York	Brooklyn, New York Taft, Louisiana	1968-1969 1970-present
M&T Chemicals, Inc.	Rahway, New Jersey	Carrollton, Kentucky	1965-present
Cardinal Chemical Company	Columbia, South Carolina	Columbia, South Carolina	1968-present
Cincinnati Milacron	Reading, Ohio	Reading, Ohio	1968-present

Production Process

$$(C_4H_9)_2SnO + 2\ HOC(=O)CH{=}CHC(=O)OC_8H_{17} \longrightarrow (C_4H_9)_2Sn(OC(=O)CH{=}CHC(=O)OC_8H_{17})_2 + H_2O$$

Required Raw Materials

Basis: 2,000 lb of dibutyltin octylmaleate ester

$(C_4H_9)_2SnO$: 724 lb

$HOC(=O)CH{=}CHC(=O)OC_8H_{17}$: 1,328 lb

Waste Material Produced

Water: 52 lb

Energy Consumed

Gas: 1,000 cu ft; Steam: 7,000 lb; Electricity: 167 kw-hr

NIOSH Standards

LD_{50} = 284 mg/kg (oral-rat)

Trade Names (not included in Table 4)

Ferro Chemical: Ferro 832, 835, 837

Tenneco Chemicals: Nuostabe V-1525

Price History

Year	Price/lb ($)	Value (million dollars)
1965	2.00	0.080
1966	2.00	0.080
1967	2.00	0.100
1968	2.00	0.160
1969	2.00	0.220
1970	2.00	0.220
1971	2.00	0.220
1972	2.00	0.240
1973	2.35	0.282
1974	2.60-3.00	0.308 (avg.)

Physical Properties

Physical form: Clear, pale liquid

Specific gravity at 25°C: 1.230

Viscosity at 25°C: 140 centipoise

Estimated Consumption of Dibutyltin Maleate Esters by Area (million pounds)

Year	Bottles	Sheet and film	Total
1965	0.01	0.03	0.04
1966	0.01	0.03	0.04
1967	0.02	0.03	0.05
1968	0.05	0.03	0.08
1969	0.06	0.05	0.11
1970	0.06	0.05	0.11
1971	0.04	0.07	0.11
1972	0.05	0.07	0.12
1973	0.06	0.06	0.12
1974	0.05	0.06	0.11

DIBUTYLTIN DILAURATE

$$(C_4H_9)_2Sn(O\overset{O}{\overset{\|}{C}}C_{11}H_{23})_2$$

Production Quantities

Year	M&T	Argus	Cincinnati Milacron	Cardinal	Total quantity (million lb)
1965	0.3	-	-	-	0.3
1966	0.3	-	-	-	0.3
1967	0.3	-	-	0.05	0.35
1968	0.3	-	-	0.1	0.4
1969	0.4	-	-	0.1	0.5
1970	0.5	-	-	0.1	0.6
1971	0.6	-	-	0.1	0.7
1972	0.5	-	0.1	0.1	0.7
1973	0.7	-	0.1	0.1	0.9
1974	0.7	0.1	0.1	0.1	1.0

Manufacturers

Manufacturer	Corporation office site	Production site	Years produced
M&T Chemicals, Inc.	Rahway, New Jersey	Carrollton, Kentucky	1965-present
Argus Chemical Corporation	Brooklyn, New York	Taft, Louisiana	1974-present
Cincinnati Milacron	Reading, Ohio	Reading, Ohio	1972-present
Cardinal Chemical Company	Columbia, South Carolina	Columbia, South Carolina	1967-present

Production Process

$$Bu_2SnO + 2\ C_{11}H_{23}CO_2H \longrightarrow Bu_2Sn(O\overset{O}{\overset{\|}{C}}C_{11}H_{23})_2 + H_2O$$

Dibutyltin dilaurate is a liquid or low melting solid, depending on the type and purity of the lauric acid used in the preparation.

Required Raw Materials

Basis: 2,000 lb of dibutyltin dilaurate

$(C_4H_9)_2SnO$: 789 lb

$C_{11}H_{23}CO_2H$: 1,270 lb

Waste Materials Produced

Water: 59 lb

Energy Consumed

Gas: 1,000 cu ft; steam: 7,000 lb; Electricity: 167 kw-hr

NIOSH Standards

LD_{50} = 243 mg/kg oral-rat

Price History

Year	Average price/lb ($)	Value (million dollars)
1965	2.00	0.600
1966	2.00	0.600
1967	2.00	0.700
1968	2.00	0.800
1969	1.75	0.875
1970	1.75	1.050
1971	1.75	1.225
1972	1.75	1.225
1973	2.00	1.800
1974	2.43	2.430

Trade Names (not included in Table 4)

Ferro Chemical: Ferro 820

Physical Properties

Physical form: Oily liquid; low melting solid

Specific gravity at 25°C: 1.04

Refractive index at 20°C: 1.471

Boiling point: 205°C at 10 mm

Freezing point: 4°C

Melting point: 22 to 27°C

Viscosity at 25°C: 42 centipoise

Solubility: H_2O - insoluble
benzene - soluble
acetone - soluble

METHYLTIN ISOOCTYLMERCAPTOACETATES

$$(CH_3)_xSn(SCH_2CO_2C_8H_{17})_y$$

$$x = 1 \text{ or } 2 \quad y = 2 \text{ or } 3$$

Production Quantities

Year	Cincinnati Milacron	Argus	Total quantity (million lb)
1970	0.7	-	0.7
1971	1.4	-	1.4
1972	2.6	0.3	2.9
1973	3.6	0.4	4.0
1974	3.5	1.0	4.5

Methyltin isooctylmercaptoacetates are usually mixtures of the mono- and dimethyl compounds. The ratio is somewhat variable depending upon the specific customer and the specific use of the material; however, the most common mono:di ratio is 40:60.

Methyltin compounds were not new compounds when introduced commercially in 1970. Some quantities had been sold commercially in 1959 to 1960 but, due to problems with the trimethyl compounds as impurities, the product was removed from the market. By using the "direct" synthesis, the producers are able to reduce the trimethyltin impurity to less than 0.5%. Commercial formulations began as the dimethyl compounds and have been progressing to blends with an increasing monomethyltin content.

Manufacturers

Manufacturer	Corporation office site	Production site	Years produced
Argus Chemical Corporation	Brooklyn, New York	Taft, Louisiana	1972-present
Cincinnati Milacron	Reading, Ohio	Reading, Ohio	1970-present

Production Process

$$CH_3SnCl_3 + 3\ HSCH_2CO_2C_8H_{17} \longrightarrow CH_3Sn(SCH_2CO_2C_8H_{17})_3 + 3\ HCl$$

$$(CH_3)_2SnCl_2 + 2\ HSCH_2CO_2C_8H_{17} \longrightarrow (CH_3)_2Sn(SCH_2CO_2C_8H_{17})_2 + 2\ HCl$$

The weight ratio of the starting materials are adjusted to produce a final product having a 60:40 weight ratio of di:mono.

Required Raw Materials

Basis: 2,000 lb of 60:40 di:mono methyltin isooctylmercaptoacetate

CH_3SnCl_3: 257 lb

$(CH_3)_2SnCl_2$: 471 lb

$HSCH_2CO_2C_8H_{17}$: 1,540 lb

Waste Materials Produced

HCl: 268 lb

Energy Consumed (estimated)

Gas: 300 cu ft; Steam: 0; Electricity: 33 kw-hr

Price History

Year	Price/lb ($)	Value (million dollars)
1970	1.84	1.288
1971	1.84	2.576
1972	1.84	5.336
1973	1.84	7.360
1974	2.26 (avg.)	10.170

Physical Properties

Physical form: Clear water white liquid

Specific gravity at 25°C: 1.177

Refractive index at 25°C: 1.5106

Viscosity at 25°C: 50 centipoise

Estimated Consumption by Use Area (million pounds)

Year	Pipe and conduit	Injection molding	Siding and profiles	Bottles	Sheet and film	Total
1970	0.43	0.06	0.10	0.04	0.04	0.67
1971	0.97	0.09	0.21	0.09	0.07	1.43
1972	2.14	0.13	0.45	0.10	0.09	2.91
1973	2.85	0.21	0.69	0.11	0.09	3.95
1974	3.31	0.24	0.70	0.12	0.09	4.46

DI(n-OCTYL)TIN-S,S'-BIS(ISOOCTYLMERCAPTOACETATE)

$$(n\text{-}C_8H_{17})_2Sn(SCH_2CO_2C_8H_{17})_2$$

Production Quantities

Year	M&T	Argus	Cincinnati Milacron	Total quantity (million lb)
1968	0.16	-	-	0.16
1969	0.20	-	-	0.20
1970	0.32	-	-	0.32
1971	0.30	0.05	0.02	0.37
1972	0.50	0.05	0.01	0.56
1973	0.50	0.05	0.07	0.62
1974	0.27	0.05	0.05	0.37

According to FDA regulations, this compound must have 15.1 to 16.4% by weight of tin and 8.1 to 8.9% by weight of mercapto sulfur. It is made from di(n-octyl)tin dichloride having an organotin composition that is not less than 95% by weight di(n-octyl)tin dichloride, not more than 5% by weight total of n-octyltin trichloride and/or tri(n-octyl)tin chloride, not more than 0.2% by weight total of other eight carbon isomeric alkyltin derivatives, and not more than 0.1% by weight total higher and lower homologous alkyltin derivatives. In actuality, the di(n-octyl)tin dichloride, meeting the above specifications, is converted to the oxide prior to the ester formation.

Manufacturers

Manufacturer	Corporation office site	Production site	Years produced
M&T Chemicals, Inc.	Rahway, New Jersey	Carrollton, Kentucky	1968-present
Argus Chemical Corporation	Brooklyn, New York	Brooklyn, New York	1971-present
Cincinnati Milacron	Reading, Ohio	Reading, Ohio	1971-present

Production Process

$$(n\text{-}C_8H_{17})_2SnO + 2\ HSCH_2CO_2C_8H_{17} \quad (n\text{-}C_8H_{17})_2Sn(SCH_2CO_2C_8H_{17})_2 + H_2O$$

Required Raw Materials

Basis: 2,000 lb of di(n-octyl)tin-S,S'-bis(isooctylmercaptoacetate)

$(n\text{-}C_8H_{17})_2SnO$: 961 lb

$HSCH_2CO_2C_8H_{17}$: 1,087 lb

Waste Material Produced

H_2O: 48 lb

Energy Consumed

Gas: 1,000 cu ft; Steam: 7,000 lb; Electricity: 167 kw-hr

NIOSH Standards

LD_{50} = 2,010 mg/kg (oral-mus.)

Price History

Year	Price/lb ($)	Value (million dollars)
1968	2.75	0.440
1969	2.75	0.550
1970	2.75	0.880
1971	2.75	1.018
1972	2.65	1.484
1973	2.81	1.742
1974	3.55	1.314

Physical Properties

Physical form: Clear yellow liquid

Specific gravity at 25°C: 1.085

Refractive index at 25°C: 1.5005

Solubility: Soluble in esters, ethers, ketones, alcohols, aliphatic and aromatic hydrocarbons, chlorinated hydrocarbons, and other organic solvents.
Insoluble in water.

Estimated Consumption by Use Area (million pounds)

Year	Bottles	Sheet and film	Total
1968	0.02	0.14	0.16
1969	0.04	0.16	0.20
1970	0.06	0.30	0.32
1971	0.07	0.30	0.37
1972	0.16	0.40	0.56
1973	0.15	0.47	0.62
1974	0.09	0.28	0.37

DI(n-OCTYL)TIN MALEATE POLYMER

$$\left[(n\text{-}C_8H_{17})_2SnOC(=O)CH{=}CHC(=O)O\right]_n \qquad n = 2 \text{ to } 4$$

Production Quantities

Year	M&T	Total quantity (million lb)
1968	0.02	0.02
1969	0.03	0.03
1970	0.05	0.05
1971	0.06	0.06
1972	0.08	0.08
1973	0.08	0.08
1974	0.07	0.07

According to FDA regulations, the polymer must have 25.2 to 26.6% by weight tin and a saponification number of 225 to 255. It is made from di(n-octyl)tin dichloride meeting the same specifications described earlier for the di(n-octyl)tin-S,S'-bis(isooctylmercaptoacetate). In actuality, the di(n-octyl)tin dichloride is converted to the corresponding oxide prior to formation of the maleate polymer.

Manufacturers

Manufacturer	Corporation office site	Production site	Years produced
M&T Chemicals, Inc.	Rahway, New Jersey	Carrollton, Kentucky	1968-present

Production Process

$$(n\text{-}C_8H_{17})_2SnO + HOC(=O)CH{=}CHC(=O)OH \longrightarrow \left[(n\text{-}C_8H_{17})_2SnOC(=O)CH{=}CHC(=O)O\right]_n + 2\ H_2O$$

$$n = 2 \text{ to } 4$$

Required Raw Materials

Basis: 2,000 lb of di(n-octyl)tin maleate polymer

$(n\text{-}C_8H_{17})_2SnO$: 1,573 lb

$HOC(=O)CH{=}CHC(=O)OH$: 505 lb

Waste Material Produced

Water: 78 lb

Energy Consumed

Gas: 1,000 cu ft; Steam: 7,000 lb; Electricity: 167 kw-hr

Price History

Year	Price/lb ($)	Value (million dollars)
1968	3.15	0.063
1969	3.15	0.095
1970	3.15	0.158
1971	3.15	0.189
1972	3.15	0.252
1973	3.33	0.266
1974	4.06 (avg.)	0.284

Physical Properties

Physical form: Powder

Specific gravity at 25°C: 1.33

Estimated Consumption by Use Area (million pounds)

Year	Bottles	Sheet and film	Total
1968	0.003	0.01	0.01
1969	0.004	0.02	0.02
1970	0.010	0.03	0.04
1971	0.012	0.05	0.06
1972	0.027	0.05	0.08
1973	0.027	0.05	0.08
1974	0.016	0.05	0.07

MIXED METALS

These mixtures were introduced in 1973 primarily to compete in the rigid PVC pipe and conduit market. They consist of mixtures of the standard dimethyl or dibutyltin isooctylmercaptoacetates with calcium or barium salts of phenols, cresols, 2-ethylhexanoic acid, or other long-chain branched acids. Newer mixed metals have also incorporated strontium. The most common mixture probably consists of the barium phenolate with one of the alkyltin compounds in a 50:50 mixture ratio.

It is estimated that in 1973, approximately 0.8 million pounds of the mixture were consumed; by 1974 the consumption had decreased to about 0.5 million pounds. These mixtures are offered by all of the alkyltin producers in varying ratios of calcium to barium and in different mixture ratios with the alkyltin compounds depending upon the specific end use of the compounded PVC resin. The price of these mixtures has risen from $1.08/lb in 1973 to the current price of $1.89/lb.

The major manufacturers of mixed metals are Argus Chemicals, Ferro Chemical, and Synthetic Products. In 1973, the production quantities are estimated at Synthetic Products: 0.4×10^6 lb, Ferro: 0.1×10^6, and Argus: 0.3×10^6 lb. For 1974, the estimated quantities are Synthetic Products: 0.2×10^6 lb, Argus: 0.2×10^6 lb, and Ferro: 0.1×10^6 lb.

BIS(TRIBUTYLTIN) OXIDE

$$[(C_4H_9)_3Sn]_2O$$

U.S. Production Quantities

Year	Total quantity (million lb)
1965	0.50
1966	0.50
1967	0.10
1968	0.10
1969	0.15
1970	0.17
1971	0.20
1972	0.25
1973	0.30
1974	0.50

The above figures are the estimated U.S. production; however, quantities of this material are imported.

Manufacturers

Manufacturer	Corporation office site	Production site	Years produced
M&T Chemicals, Inc.	Rahway, New Jersey	Carrollton, Kentucky	1965-present

Production Process

$$2\ (C_4H_9)_3SnCl + 2\ NaOH \longrightarrow [C_4H_9)_2Sn]_2O + 2\ NaCl + H_2O$$

Required Raw Materials

Basis: 2,000 lb of bis(tributyltin) oxide

$(C_4H_9)_3SnCl$: 2,185 lb

NaOH: 628 lb

Waste Materials Produced

NaCl: 392 lb

H_2O: 61 lb

Energy Consumed

Gas: 1,000 cu ft; Steam: 6,200 lb; Electricity: 135 kw-hr

NIOSH Standards

LD_{50} = 194 mg/kg (oral-rat)

LD_{50} = 7 mg/kg (ipr-rat)

Price History

Year	Price/lb ($)	Value (million dollars)
1965	3.15	1.575
1966	3.15	1.575
1967	3.15	0.315
1968	3.15	0.315
1969	2.90	0.435
1970	2.90	0.493
1971	2.90	0.725
1972	2.90	0.725
1973	3.22 (avg.)	0.966
1974	4.06 (avg.)	2.030

Physical Properties

Physical form: Colorless to slightly yellow liquid

Specific gravity at 20°C: 1.17

Refractive index at 20°C: 1.486 to 1.488

Boiling point: 210 to 214°C at 10 mm

Freezing point: -45°C

Viscosity at 20°C: 9 centipoise

Solubility: Soluble in organic solvents, insoluble in water.

TRIBUTYLTIN FLUORIDE

$$(C_4H_9)_3SnF$$

U.S. Production Quantities

Year	Total quantity (million lb)
1970	0.01
1971	0.03
1972	0.05
1973	0.08
1974	0.12

The above figures are the estimated U.S. production; however, quantities of this material are imported.

Manufacturers

Manufacturer	Corporation office site	Production site	Years produced
M&T Chemicals, Inc.	Rahway, New Jersey	Carrollton, Kentucky	1970-present

Production Process

$$(C_4H_9)_3SnCl + NaF \xrightarrow{H_2O} (C_4H_9)_3SnF + NaCl$$

Required Raw Materials

Basis: 2,000 lb of tributyltin fluoride

$(C_4H_9)_3SnCl$: 2,106 lb

NaF: 272 lb

After completion of the reaction, the product is centrifuged to form a wet cake (containing up to 40% water) and stored in this form. Immediately prior to packaging, the wet cake is thoroughly dried. The dried powder will absorb moisture if allowed to remain open to the atmosphere.

Waste Material Produced

NaCl: 378 lb

Energy Consumed (estimated)

Gas: 1,000 cu ft; Steam: 7,400 lb; Electricity: 146 kw-hr

Price History

Year	Price/lb ($)	Value (million dollars)
1970	3.20	0.032
1971	3.20	0.096
1972	3.20	0.160
1973	3.47 (avg.)	0.278
1974	4.54 (avg.)	0.545

Physical Properties

Physical form: White powder

Melting point: 240°C (decomposition)

Solubility: Slightly soluble in inorganic solvents. Insoluble in water.

HANDLING AND TRANSPORTATION

All of the alkyltin compounds in this study, including those with biocidal applications, are eye and skin irritants and can cause irritation of the upper respiratory tract.[1/] The most common result of contact with these materials is a skin rash of rather short duration. In case of eye contact, a rather severe irritation and reddening of the eye can occur. For workers contacting these materials, either in production facilities, PVC compounding plants, or shipyards, it is recommended that these personnel wear eye goggles, rubber gloves, longsleeved coveralls, and, depending upon the product, dust masks. In all cases, good ventilation should be provided to remove fumes and powder.

For workers spraying organotin paints, a full-face, air-supplied respirator is recommended in addition to the above precautions.[2/] Other personnel working within a 25 ft radius or within 100 ft downwind of the spray should be protected in a similar manner. These footage figures obviously should be modified depending upon atmospheric conditions, particularily wind velocity.

The revised Section 311-(b)(2)(B) of the Federal Water Pollution Control Act Amendments of 1972 (Federal Register, August 22, 1974) does not list any of the selected organotin compounds as being hazardous substances. The Code of Federal Regulations, Title 49, Transportation (October 1, 1973) does not list alkyltin compounds as being hazardous materials and requires no special labeling or handling of the shipping containers. Bis(tributyltin) oxide and tributyltin fluoride are registered with the Environmental Protection Agency, Office of Pesticides and, as such, each container of active ingredient or antifouling paint, containing the active ingredient, must have appropriate directions for its use, accidental contact, and disposal of the container. In addition, each container of antifouling paint must clearly show a label analysis.

When packaged for shipment, the alkyltin compounds are normally available in 55 gal. drums. Larger quantities are available by tanktruck delivery if desired. Smaller quantities are also available at increased cost. For users, one common method of storage is in 250, 300 or 350 gal. cubic stainless steel containers, fitted with automated pumping and metering devices.

REFERENCES TO SECTION VI

1. Sheldon, A. W., J. Paint Technology, 47, 54 (1975).

2. Engelhart, J. E., and A. W. Sheldon, 15th Annual Marine Coatings Conference, Point Clear, Alabama, February 1975.

SECTION VII

AREAS OF UTILIZATION

In this section, the specific uses will be discussed for each of the organotin compounds listed in Section VI. The principal areas of heat stabilizers for poly(vinyl chloride), urethane and silicone catalysts, and biocidal applications will be discussed as separate subsections. Minor use areas will be discussed separately but under the general heading of miscellaneous uses.

The overall consumption of organotin compounds has not changed to any appreciable extent during the past 10 years. Heat stabilization of rigid poly(vinyl chloride) has accounted for 85 to 90% of the domestic consumption of the selected organotins. Catalytic, biocidal, anthelmintic, and other uses have accounted for the remaining 10 to 15%. During this same time interval, exportation remained fairly constant at 4 to 5% of the total annual production.

A cursory look at the numerous current review articles on organotin compounds reveals several applications in the catalyst and biocidal areas; however, most of these applications, as discussed later in this section, consume relatively small quantities of organotin compounds.

HEAT STABILIZERS FOR POLY(VINYL CHLORIDE)

This area represents, by far, the major usage of the mono- and dialkyltin compounds. Within the scope of this subsection, their utilization with certain copolymers will be included; therefore this area is not strictly for poly(vinyl chloride).

The most widely accepted viewpoint of PVC breakdown relates to a dehydrochlorination reaction at the allylic or tertiary chlorine site with the formation of a double bond.[1/] As the degradation continues, the development of a chromophoric conjugated structure occurs which leads to color formation. Poly(vinyl chloride) will show a black coloration when as little as 0.1% of the polymer decomposes. The dehydrochlorination reaction is autocatalytic and is further accelerated by the presence of oxygen and contaminants, such as iron, residual polymer catalysts, or suspension agents. To

prevent color formation and preserve the appearance of the compound, the primary approach is to inhibit the formation of the conjugated double bonds by the addition of stabilizers, which will also reduce the effect of any catalytic components. For additional information with regard to PVC degradation and the mechanism of stabilization, see Ref. 2.

In the processing of unplasticized PVC resin, temperatures are attained which are well in excess of the initial temperature required for the degradation process to be initiated. The principal means of processing rigid poly(vinyl chloride) is by extrusion and, depending upon the final use of the plastic, extrusion processes occur either by a single screw or a double (or multi) screw extruder. In single screw extruders, processing temperatures reach up to 205 to 215°C whereas with multi-screw machines, the temperature may reach 190 to 195°C.[3] At these temperatures, the use of a heat stabilizer is mandatory to produce a clear product. Mono- and dialkyltin mercaptoesters are the most effective of the metallic stabilizers.[1]

Estimated U.S. consumption of organotin compounds as heat stabilizers for rigid and semi-rigid poly(vinyl chloride) and copolymers is shown in Table 5.

There are two factors which must be considered, respective to the quantity of material consumed as heat stabilizers.

1. The production of rigid and semi-rigid PxC products has risen tremendously over the past 10 years from approximately 181 million pounds in 1965[4] to over an estimated 1,700 million pounds in 1975.[5]

2. During the same time interval, the use of multiscrew extruders, which use up to 40% less heat stabilizers, began to replace single screw extruders. In 1965, it was estimated that 95% of all extrusion was using single screw machinery but by 1974, this figure had dropped to approximately 25% single screw and 75% multi-screw.[6] Thus a situation exists in which a large increase in the production of rigid poly(vinyl chloride) has occurred but at the same time, the advent of new processing machinery has decreased the required quantity of heat stabilizers per pound of PVC.

The major organotin compounds which have been utilized over this 10 year time interval are as follows:

* Mono- and dimethyltin isooctylmercaptoacetates
* Mono- and dibutyltin isooctylmercaptoacetates
* Dibutyltin-bis(laurylmercaptide)
* Dibutyltin-bis(alkylmaleate esters)
* Di(n-octyl)tin-S,S'-bis(isooctylmercaptoacetate)
* Di(n-octyl)tin maleate polymer

Table 5. ESTIMATED CONSUMPTION OF ORGANOTIN COMPOUNDS AS HEAT STABILIZERS

Year	Estimated consumption (million pounds) Modern Plastics[a]	MRI[b]
1965	(3.9)[c]	3.3
1966	(4.2)	5.6
1967	(4.6)	5.9
1968	5	7.4
1969	5.7	8.3
1970	6.1	10.6
1971	7.6	11.2
1972	10.9	15.5
1973	16.7	17.0
1974	16.5	16.2

a/ Modern Plastics, McGraw-Hill, Inc., New York, September issues.

b/ MRI estimates based on consumption data in specific use areas and discussions with PVC resin processors and consumers.

c/ Estimates based on MP consumption data for subsequent years.

Dibutyltin sulfide has never been used commercially as a stabilizer by itself but is only present as a component in blends and mixtures with other mono- and dialkyltin compounds. Butylthiostannoic anhydride (BTSA) has been used as a single component stabilizer only in PVC food applications and, like dibutyltin sulfide, is also a component of blends and mixtures of other organotin compounds. The two di(n-octyl)tin compounds have been used primarily only in PVC food applications.

Dibutyltin-bis(β-mercaptopropionate) has appeared in the literature through the years since about 1965 and did find some usage as a highly specialized heat stabilizer in PVC blown nonfood bottles. Its main selling point was that it did not affect the distortion point of the resin as did the more widely used liquid mercaptoester stabilizers. Due to the high cost of the mercaptopropionic acid, it was an expensive stabilizer and never achieved an appreciable commercial consumption volume. The "old line" stabilizers, such as dibutyltin dilaurate and dibutyltin maleate, had been replaced as major heat stabilizers prior to 1965. However, in certain highly specialized areas, they still are used to a very minor extent as heat stabilizers.

At this point, a brief chronology and description of the terminology used with organotin heat stabilizers should be provided. This chronology can be summarized as follows:

1965 - "standard" tin compounds

1967 - "high efficiency" tin stabilizers introduced

1968 - Dioctyltin compounds approved by FDA

1970 - "super tins" and dimethyltin compounds introduced

1972 - "mixed metal" tins introduced

1973 - First mention in the literature of "low cost straight" methyl and butyltins.

"Standard" tins: These were the normal dibutyltin-S,S-bis(isooctylmercaptoacetate), dibutyltin-bis(laurylmercaptide), dibutyltin-bis(alkyl maleate esters), and others.

"High efficiency" tins: xhis group of stabilizers was introduced after a considerable search for lower cost, more efficient stabilizers. They were mixtures of organotin compounds which yielded a higher tin content stabilizer. In this case, surprisingly it led to a better heat stabilizer at lower use levels (2 phr versus 3 phr); however, after they had

been on the market for sometime, it was found that they seem to be sheer sensitive in the new twin screw extruders. These stabilizers were usually a mixture of mono- and/or dibutyltin mercaptoacetates, a thiostannoic acid or dibutyltin sulfide, and an antioxidant, usually a hindered phenol.

"Super tins": This terminology is sometimes confused with the high efficiency tins but, in this case, the changes in efficiency are based on changes in the redistribution reaction to give a higher monoalkyltin content. The higher monoalkyltin content of the product led to better initial color, clarity, and lubrication; in addition, it also had an overall lower tin content than the "high efficiency" tins.

"Mixed metal" tins: These are mixtures of the mono- and dibutyl- or mono- and dimethyltin-S,S-bis(isooctylmercaptoacetates) with calcium or barium salts of phenols, cresols, or 2-ethylhexanoic acid. The most common salts are the barium phenolates. Typically, the mixed metals contain approximately 50% organotin compounds. These materials have not achieved a high degree of popularity.

"Low cost straight" tins: The materials are based on a mixture of mono- and dialkyltin mercaptoacetates with a ratio of di- to mono- of approximately 60:40. These mixtures are then diluted with an inert material, such as mineral oil or a similar diluent, to increase the bulk of the mixture and provide better processing and handling for the formulators of the PVC resin. The straight tins, with a tin content of about 11 to 12%, are very suitable for twin screw extrusion where low stabilizer content is used.

Actually, in Europe, materials with a ratio of 50% mono- to 50% dialkyltins have been used, as they give more stabilizer per pound of tin. Increased physical properties, such as plasticizing effect and better extrusion, can be obtained with PVC resins stabilized with an organotin compound containing a high monoalkyl content.

In the ensuing subsections of this section, the processing technology of heat stabilizers will be discussed, as will the various areas of utilization. Within each use area, the topics of specific organotin compounds, the quantities consumed, major users, and final products will be detailed.

PVC Process Technology

The method of incorporation of organotin heat stabilizers into PVC resin is basically the same as for the incorporation of any other additive to the resin. Liquid organotin compounds are withdrawn from bulk storage tanks or drums through a system of metered valves to either a ribbon blender or a high speed blender, such as the Henshel mixer. The ribbon

blender is used mostly for extrusion and calendering compounds, but the Henshel mixer is necessary for pipes and extrusions where dry blends are used. In dry blends, very fine disintegration must occur and the stabilizer must be well blended with all other ingredients. The compound is blended in a given period of time to insure uniform distribution of the heat stabilizer among the PVC resin particles. Any other additives, such as lubricants, etc., are also added during this mixing process.

At the end of the mixing period, the dry blend is either piped to an extruder or, if the dry blend is to be sold, to the packaging operation where the formulated resin is placed in suitable containers for shipment to their customers. Packaging can range from 80 lb plastic-lined paper bags to tankcars, depending upon the specific customer.

Formulated PVC resin is also sold in pelletized form. From the ribbon blender, the resin is extruded into thin rods, which are then cut into pellets. After pelletizing, the PVC is packaged in the same manner as the granular resin.

In operations where the organotin heat stabilizer may be handled, full eye goggles, rubber gloves, coverall, and a dust mask should be worn by personnel in direct contact with these materials. Prolonged contact with the skin can produce irritation. Contact with the eyes can produce severe irritation. Once the heat stabilizer is incorporated into the compounded resin, the resin requires no special handling other than the normal procedures.

The major PVC producers having compounding facilities as of January 1975, are listed in Table 6. These plant capacities are for all PVC not necessarily organotin stabilized PVC. Actual stabilization would depend upon the product being manufactured or upon the desires of specific customers. There have been no companies who, within the last 10 years, were major contributors to the compounding of PVC resins and subsequently withdrew from the market.

Use in PVC Pipe and Conduit

Pipe and conduit represents the single largest area of utilization for mono- and dialkyltin compounds. Prior to 1970, only two types of tin compounds were used in this area, dibutyltin-S,S-bis(isooctylmercaptoacetate) and dibutyltin-bis(laurylmercaptide). Isooctylmercaptoacetate was used both as the standard compound and as its "high efficiency" mixture. The increasing usage of twin screw extruders signaled the introduction of the methyltin compounds, which had been known for many years but offered no advantage over the butyltin compounds. With the twin screw extruder and its lower processing temperature, the higher tin content of the methyls offered a significant advantage over the butyls in that less material could

Table 6. MAJOR PVC COMPOUNDERS

Company and site	Capacity (million pounds/year) (as of January 1975)
B. F. Goodrich Company Avon Lake, Ohio Henry, Illinois Long Beach, California Louisville, Kentucky Pedricktown, New Jersy	1,080
Robintech, Inc. Painesville, Ohio	500
Tenneco Chemicals, Inc. Burlington, New Jersey Flemington, New Jersey Pasadena, Texas	450
Borden, Inc. Illiopolis, Illinois Leominster, Massachusetts	400
Diamond Shamrock Corporation Delaware City, Delaware Deer Park, Texas	400
Ethyl Corporation Baton Rouge, Louisiana	300
Occidental Petroleum Corporation Hooker Chemical Corporation (Ruco Division) Burlington, New Jersey	150
Pantasote Company Passaic, New Jersey Point Pleasant, West Virginia	100
Uniroyal, Inc. Painesville, Ohio	75-100

Sources: Modern Plastics, January 1975; Directory of Chemical Producers, SRI.

be used to obtain the same stabilizing effect. In addition, the higher volatility of the methyl compounds would not present problems at the lower processing temperatures. Since 1970, the methyltin compounds have been used to a progressively larger extent in this particular area. In 1973, mixed metals were introduced and have found some usage in the pipe and conduit field as shown in Table 7.

The choice of extruder used in pipe and conduit is determined by the type of pipe to be produced. In general, for pipe over 4 in. in diameter, twin screw extruders are used, while for less than 4 in. diameter pipe, single screw machines are the choice. Extruder type also dictates the quantity of heat stabilizer to be used, as the twin or multi-screw requires approximately 50 to 60% less stabilizer than the single screw.

Within the area of pipe and conduit, the breakdown by final product for 1971 to 1974 is given in Table 8. At the present time, potable water pipe is 100% organotin stabilized. All other types of pipe are about 95% organotin stabilized with the remainder generally being lead stabilized. While the use of organotin compounds is necessary only for potable water pipe, many manufacturers of this pipe also produce all of the other types. For those, lead stabilizers can be used but in order to avoid contamination and, hence cross-staining of the organotin by lead, separate facilities would be necessary. For that reason, most producers who manufacture the full range of PVC pipe and conduit will use organotin compounds throughout their production lines.

The primary use of PVC potable water pipe is from water mains to buildings where a large volume of H_2O flow occurs and the exposure temperature is lowered because the pipe is buried.

Under the recent FDA proposal (see Ref. 8), PVC water pipe would be subject to the provisions of 121.4000 concerning food additives approved on an interim basis. Within 60 days following the effective date of a final regulation, an interested party would be required to show FDA that satisfactory studies have been undertaken to determine whether vinyl chloride may reasonably be expected to be present in water drawn from a system containing poly(vinyl chloride) pipe. If no such commitment were made, or adequate and appropriate studies were not undertaken, the regulation permitting continued use of poly(vinyl chloride) water pipe could be revoked.

The major producers of dry blend resins for the pipe and conduit industry are B. F. Goodrich Chemical Company and Diamond Shamrock Corporation. These two companies supply about 30 to 40% of the total market. Pipe and conduit producers, who formulate and blend their own resins, constitute the majority of the remaining users of organotin heat stabilizers. These producers, shown below, account for about 50 to 55% of the total market.

Table 7. ESTIMATED CONSUMPTION OF ORGANOTIN COMPOUNDS IN PIPE AND CONDUIT[a]

Year	Total PVC (million pounds)[b]	Estimated quantity (million pounds)				
		Bu-IOMA[c]	Bu-LM[d]	Me-IOMA[e]	Mixed metals	Total
1965	65	1.08	0.88	-	-	1.96
1966	125	3.05	0.87	-	-	3.92
1967	140	2.91	0.75	-	-	3.66
1968	186	3.67	0.74	-	-	4.41
1969	238	3.65	0.63	-	-	4.28
1970	387	3.62	0.70	0.43	-	4.75
1971	541	3.05	0.53	0.97	-	4.55
1972	877	4.25	0.56	2.14	-	6.95
1973	1,148	3.68	0.55	2.85	0.8	7.87
1974	1,066	3.32	0.64	3.31	0.5	7.77

a/ Consumption figures calculated using percent tin stabilization, average phr, and individual compound breakdown data supplied by pipe producers and dry blend formulators.
b/ Source: 1965-1969 Modern Plastics, January issues; 1970-1974 Plastic Pipe Institute data.
c/ Dibutyltin-S,S'-bis(isooctylmercaptoacetate) and blends.
d/ Dibutyltin-bis(laurylmercaptide).
e/ Dimethyltin-S,S'-bis(isooctylmercaptoacetate) and blends.

Table 8. PVC PIPE AND CONDUIT USE BY AREA[a]

Type of pipe	Quality of PVC (million pounds)			
	1971	1972[c]	1973	1974
Potable water	280.1	412.8	465.6	416.8
Pressure (nonpotable)	93.4	137.6	155.2	139.9
Drain-waste-vent (DWV)	44.9	86.0	101.4	119.2
Conduit	103.8	184.0	331.3	275.9
Sewer and drain	-	-	-	107.0
Other[b]	18.6	56.8	94.8	8.1

a/ Data supplied by Plastic Pipe Institute.
b/ Includes sewer and drain in 1971 to 1973.
c/ Estimated from PPI data.

Major Pipe and Conduit Producers

Carlon
Certain-Teed
Gifford-Hill
Johns-Manville
Precision Thermoplastics
Robintech
Geneva Pipe
Amoco Chemicals

The remaining 10 to 15% are comprised of numerous medium and small producers and formulators.

Injection Molded PVC

Approximately 75% of all injection molding of poly(vinyl chloride) is consumed in the production of pipe fittings. Within the area of pipe fittings, the usage falls into two major categories: NSF approved fittings for potable water pipe axd non-NSF approved for sewer, drains, vents, conduit, etc. All potable water pipe is stabilized with organotin compounds and, probably, 90% of all non-NSF pipe is presently stabilized with organotin compounds to avoid the contamination and cross-staining that can occur with lead stabilizers. This problem was discussed in the previous subsection on pipe and conduit.

The remaining 25% of all injection molded PVC is consumed for general purpose uses, such as computer housing and parts, typewriter housings, television cabinets, telephone industry switch gears, and others. Very little, if any, of the general purpose uses are stabilized by organotins.

Table 9 lists the specific organotin compounds and the quantities of each material consumed in injection molded PVC. The major producers of dry blends or pellets for injection molding, as well as the manufacturers of injection molded products, who formulate their own PVC resins, are as follows:

Compounding only:	B. F. Goodrich Diamond Shamrock	95% of the market for injection molding resins
Compounders and producers:	Certain-Teed Robintech Ethyl Corp.	
Minor contributors:	Hooker-Ruco Goodyear Chemicals Sloane	

Table 9. ESTIMATED CONSUMPTION OF ORGANOTIN COMPOUNDS IN INJECTION MOLDING[a]

Year	Total PVC (million pounds)[b]	Estimated quantity (million pounds)			
		Bu-IOMA[c]	Bu-LM[d]	Me-IOMA[e]	Total
1965	13	0.20	0.03	-	0.23
1966	12	0.19	0.03	-	0.22
1967	25	0.37	0.06	-	0.43
1968	34	0.47	0.08	-	0.55
1969	52	0.68	0.12	-	0.80
1970	68	0.88	0.16	0.06	1.10
1971	75	1.00	0.19	0.09	1.28
1972	86	1.12	0.22	0.13	1.47
1973	101	1.27	0.25	0.21	1.73
1974	90	1.10	0.20	0.24	1.54

a/ Consumption figures calculated using percent tin stabilization, average phr, and individual compound breakdown data supplied by major formulators and producers.

b/ Source: Modern Plastics, January issues; Plastic Pipe Institute data.

c/ Dibutyltin-S,S'-bis(isooctylmercaptoacetate) and blends.

d/ Dibutyltin-bis(laurylmercaptide).

e/ Dimethyltin-S,S'-bis(isooctylmercaptoacetate) and blends.

Uniroyal was in the PVC injection molding business, however, they have recently announced that they are withdrawing from the PVC market.

Consumption in Extruded Profiles

This area covers many consumer products but can be conveniently divided into three areas: nonfoam profiles, foam profiles, and rigid siding. Foam profiles is a relatively new area but has been growing at a rapid pace since about 1972.

Rigid siding: The primary organotin compound used in the extrusion of rigid siding is the dibutyltin-S,S'-bis(isooctylmercaptoacetate), which includes the high efficiency and the super tins. Methyltin compounds have a volatility problem and, due to the large surface area of siding, show a deterioration in impact strength and distortion point with time leading to poor aging properties and maintenance problems. This volatility problem has limited the usage of these materials in the siding area. Another factor is that approximately 75% of all rigid siding is produced with single screw extruders so the advantage of methyltins over butyltins is diminished. The specific organotin compounds and the estimated annual consumption of each material is shown in Table 10.

The major compounders of PVC resin for rigid siding are B. F. Goodrich and Diamond Shamrock, with Goodrich controlling about 90% of the market and Diamond the remaining 10%. Certainteed, Bird and Son, and Mastic Corporation are the major extruders, who blend their own resins for captive use.

Nonfoam profiles: Nonfoam extruded profiles include consumer products such as those exemplified below:

* Rain gutters, downspouts, etc.
* Vinyl trim for wall paneling
* Vinyl trim in mobile homes, prefab houses, etc.
* Window frames
* Folding door partitions in large office buildings
* Dance floors

As with rigid siding, the principal organotin compounds for heat stability are the butyltin mercaptoacetates. The same volatility problem as with siding, again limits somewhat the usage of the methyltin mercaptoacetates in this field. Dibutyltin-bis(laurylmercaptide) is also used to a limited

Table 10. ESTIMATED CONSUMPTION OF ORGANOTIN COMPOUNDS IN RIGID SIDING

Year	Total PVC (million lb)b/	Estimated quantity (million lb)			
		Bu-IOMAc/	Bu-LMd/	Me-IOMAe/	Total
1965	6	0.16	0.01	-	0.17
1966	(12)	0.31	0.01	-	0.32
1967	20	0.44	0.01	-	0.45
1968	35	0.61	0.02	-	0.63
1969	50	0.62	0.02	-	0.64
1970	60	0.71	0.02	0.04	0.77
1971	59	0.63	0.02	0.06	0.71
1972	70	0.70	0.03	0.11	0.84
1973	86	0.81	0.03	0.19	1.03
1974	97	0.84	0.03	0.22	1.09

a/ Consumption figures calculated using percent tin stabilization, average per hour and individual compound breakdown data supplied by major compounders and producers. Use of tin stabilizers in rigid siding has slowly decreased over the last 10 years.

b/ Source: Modern Plastics, January issues; 1966 data estimated by MRI from data for other years.

c/ Dibutyltin-S,S'-bis(isooctylmercaptoacetate) and blends.

d/ Dibutyltin-bis(laurylmercaptide).

e/ Dimethyltin-S,S'-bis(isooctylmercaptoacetate) and blends.

extent in this area. Table 11 shows the specific organotin compounds and the estimated yearly consumption of each material.

The major compounders of PVC resin and producers of extruded profiles are Ethyl Corporation, B. F. Goodrich, and Airco. Of these companies, the first two control over 80% of the market. Diamond Shamrock and Goodyear Chemicals were in this market from 1965 to 1972.

Foam profiles: This is a relatively new field but it is growing at a fairly rapid pace. The prime advantage of the use of foamed poly (vinyl chloride) versus the nonfoamed is an approximate 38% savings in resin consumption for foam PVC pipe and conduit, as well as improved thermal insulation.[7] Other use areas encompass basically the same type of products as described for nonfoam profiles (i.e., interior vinyl trim for mobile homes, wall paneling, etc.).

Organotin stabilizers used in this area are basically the same as those for nonfoam extruded profiles. The specific compounds and their estimated annual consumption are shown in Table 11.

The major compounders of PVC resin and producers of extruded foam profiles are B. F. Goodrich, Diamond Shamrock, and Goodyear.

Rigid PVC Food and Nonfood Bottles

The use of organotin stabilized poly (vinyl chloride) resin for use in rigid blown bottles has been divided into food and nonfood sections because distinctly different stabilizers are required for each area.

Nonfood PVC bottles: This area represents the larger of the two areas of blown bottles. Among the consumer products which utilize varying degrees of organotin stabilized PVC resin are skin care products, cosmetics, and toiletries such as: skin creams, lotions, and cleaners; sun tan preparations; body powders; bath oil; makeup containers; medicated creams and lotions; and baby products. Essentially all poly (vinyl chloride) bottles are organotin stabilized; the only major exception is Johnson products, for their baby oil, which uses a Ca-Zn heat stabilizer.

The organotin compounds which are being used as heat stabilizers for nonfood PVC blown bottles and the estimated yearly consumption are listed in Table 12. In addition to these compounds, dibutyltin β-mercaptopropionate was used in relatively small quantities from about 1965 to 1970. However, this compound never achieved widespread usage in other areas, and thus, its only application remained in PVC bottles. Even in this area, it never gained any appreciable popularity, and at its peak (1967 to 1968), only approximately 40,000 lb were used per year.

Table 11. ESTIMATED CONSUMPTION OF ORGANOTIN COMPOUNDS IN FOAM AND NONFOAM RIGID PROFILES[a]

Year	Total PVC (million lb)[b]	Estimated quantity (million lb)			
		Bu-IOMA[c]	Bu-LM[d]	Me-IOMA[e]	Total
Nonfoam profiles					
1965	23	0.38	0.09	-	0.47
1966	25	0.41	0.10	-	0.51
1967	27	0.41	0.10	-	0.51
1968	29	0.40	0.10	-	0.50
1969	41	0.52	0.13	-	0.65
1970	82	0.98	0.25	0.06	1.29
1971	110	1.26	0.33	0.14	1.73
1972	125	1.36	0.35	0.26	1.97
1973	128	1.29	0.36	0.37	2.02
1974	112	1.11	0.30	0.35	1.76
Foam profiles					
1971	7	0.08	0.02	0.01	0.11
1972	51	0.55	0.14	0.08	0.77
1973	57	0.58	0.15	0.13	0.86
1974	48	0.46	0.13	0.13	0.72

a/ Consumption figures calculated using percent tin stabilization, average phr, and individual compound percentage data supplied by compounders and producers.

b/ Source: Modern Plastics, January issues.

c/, d/, e/ See references in Table 10.

Table 12. ESTIMATED CONSUMPTION OF ORGANOTIN COMPOUNDS IN NONFOOD BOTTLES[a]

Year	Total PVC (million lb)[b]	Estimated quantity (million lb)			
		Bu-IOMA[c]	Me-IOMA[d]	Bu-maleate ester[e]	Total[f]
1965	(6)	0.10	-	0.01	0.12
1966	(11)	0.19	-	0.01	0.22
1967	18	0.29	-	0.02	0.35
1968	23	0.39	-	0.05	0.45
1969	31.5	0.56	-	0.06	0.62
1970	45	0.78	0.04	0.06	0.88
1971	43	0.72	0.09	0.04	0.85
1972	53	0.88	0.10	0.05	1.03
1973	57	0.94	0.11	0.06	1.11
1974	55	0.92	0.12	0.05	1.08

a/ See Reference a/, Table 11.

b/ Modern Packaging Encyclopedia and Planning Guide, December 1974; Mr. R. Harting, Plastic Container Manufacturers Institute, New Shrewsbury, New Jersey; data adjusted to reflect difference between nonfood and food usage.

c/ Dibutyltin-S,S'-bis(isooctylmercaptoacetate) and blends.

d/ Dimethyltin-S,S'-bis(isooctylmercaptoacetate) and blends.

e/ Dibutyltin isooctylmaleate ester.

f/ Includes quantities of dibutyltin β-mercaptopropionate.

The two major compounders and producers of PVC blown bottles are the Ethyl Corporation and Occidental Petroleum Corporation (Hooker-Ruco Division). Minor contributors to this area are B. F. Goodrich Chemical Company, Stauffer Chemical Company, and Pantasote.

PVC food bottles: This use area, as well as rigid and semirigid PVC sheet and film, has been put under new restrictions as proposed by the Food and Drug Administration (FDA).[8] According to this proposed regulation, rigid and semirigid PVC articles intended to contact food will no longer be permitted. These uses would include bottles, boxes, blister packs, and pipe (except for potable water). If this proposed regulation becomes final, PVC could be used in rigid and semirigid applications only after approval of a food additive petition; in addition, data would be necessary to show that vinyl chloride monomer could not be reasonably expected to become a cxmponent of food. The use of organotin compounds in rigid and semirigid sheet and film will be discussed in the following subsection.

FDA approved di(n-octyl)tin-S,S'-bis(isooctylmercaptoacetate) and di(n-octyl)tin maleate polymer are the only two compounds which have found usage as heat stabilizers in PVC bottles intended to contact food. The use of these two compounds was allowed in the FDA amendment to Part 121 of the Food and Food Products Regulation issued January 20, 1968. This amendment stated, in part, that for di(n-octyl)tin-S,S'-bis(isooctylmercaptoacetate), it must have 15.1 to 16.4% by weight Sn and 8.1 to 8.9% by weight mercapto sulfur. Among other preparative restrictions, it must be made from di(n-octyl)tin dichloride having not less than 95% by weight di(n-octyl)tin dichloride. Similar restrictions also apply to the preparation of di(n-octyl)tin maleate polymer. The estimated quantities of these two compounds in PVC bottles intended to contact food are shown in Table 13. Cincinnati Milacron Chemicals, Inc. has recently filed a petition with the Food and Drug Administration proposing that the food additive regulations be amended to provide for the safe use of dimethyltin/monomethyltin isooctylmercaptoacetate as a stabilizer for use with PVC containers, bottles and rigid and semirigid sheet and film (see next subsection), intended for contact with dry food.[9] Industry sources indicate, however, that this petition probably will not be granted.

The major compounders and producers of PVC bottles for food use are basically the same as those stated above for nonfood use bottles.

Table 13. ESTIMATED CONSUMPTION OF ORGANOTIN COMPOUNDS IN FOOD USE BOTTLES[a]

Year	Total PVC (million lb)[b]	Estimated quantity (million lb)		
		Octyl-IOMA[c]	Octyl maleate[d]	Total
1968	2.0	0.02	0.003[e]	0.02
1969	3.5	0.04	0.004	0.04
1970	5.0	0.06	0.010	0.07
1971	4.8	0.07	0.012	0.08
1972	9.3	0.16	0.027	0.19
1973	8.5	0.15	0.027	0.18
1974	4.8	0.09	0.016	0.11

a/ Consumption figures calculated using percent tin stabilization, average phr, and individual compound percentage data supplied by compounders and producers.

b/ Modern Packaging Encyclopedia and Planning Guide, December 1974; Mr. R. Harting, Plastic Container Manufacturers Institute, New Shrewsbury, New Jersey; data adjusted to reflect difference between nonfood and food usage.

c/ Di(n-octyl)tin-S,S'-bis(isooctylmercaptoacetate).

d/ Di(n-octyl)tin maleate polymer.

e/ Significant figures do not necessarily reflect accuracy but only denote the small total quantities consumed.

Extruded and Calendared Sheet and Film

This area can be divided into the semirigid and rigid packaging for nonfood and food usage. Applications intended to contact food must, of course, only use organotin stabilizers that have been FDA approved for such usage.

Two main types of resins are used for these purposes: low molecular weight homopolymers of poly (vinyl chloride) and copolymers, which can range from vinyl chloride-vinyl acetate to vinyl chloride-vinylidene chloride systems. The latter are much more difficult to stabilize, particularly with respect to organotin compounds, as they may respond differently than the homopolymers or the copolymers with vinyl acetate.

There are two main processes used for these materials: the sheet die extruder and the calender. The die extruder type equipment is becoming more predominant, especially with new equipment, as it is more economical and produces sheeting at a lower cost.

Rigid and semirigid sheet and film for nonfood use: This area encompasses both packaging and nonpackaging applications. The butyltin isooctylmercaptoacetates are the preferred heat stabilizers for all facets of sheet and film. Some problems arise due to the odor of the mercapto compounds emitted during the processing of the sheet and film. The volatility of the butyltin mercapto compounds is less than that of the methyls so they are preferred. If the use of methyltin isooctylmercaptoacetates is employed, very good ventilation is required.

In nonpackaging applications of rigid sheet and film, considerable quantities of clear rigid sheet are used for credit card stock. With credit cards, a lead or Ba/Cd stabilized base sheet is produced, which gives good printing capability, and an overlay of PVC copolymer is made to improve the readability of the card. This copolymer overlay is stabilized with organotin compounds. With the lead stabilized base stock and organotin stabilized overlay, a problem of cross-staining can occur. To prevent this discoloration, dibutyltin isooctylmaleate half ester is used as the organotin stabilizer. It is rumored that M&T is now selling a major credit card stock producer a special stabilizer for this use. This stabilizer is reported to be dibutyltin 1/2 isooctylmaleate ester and 1/2 isooctylmercaptoacetate plus other additives. A material of this type would incorporate the better heat stability of the mercapto esters and the reduced cross-staining properties of the maleate esters all in one compound.

Aside from credit card stock, other consumer products of rigid sheet and film are household items (e.g., lamp shades, shower doors, room dividers etc.), corrosion resistant tank liners, duct work, patio covers, rigid roofing panels, wall coverings, industrial safety windows, blister packs, and others. The specific organotin compounds and the estimated quantities of each consumed in rigid and semirigid sheet and film for nonfood usage are given in Tables 14 and 15.

The major compounders and producers using organotin compounds as heat stabilizers in rigid and semirigid sheet and film for nonfood uses are: B. F. Goodrich, Tenneco, Union Carbide, General Tire and Rubber, and American Hoechst. These companies are estimated to control 85 to 90% of this particular market.

Rigid and semirigid sheet and film for food use: The proposed FDA restriction on the use of PVC intended to contact food and the specifications for the di(n-octyl)tin compounds have been previously discussed. In both rigid and semirigid sheet and film, the isooctylmercaptoacetate is the preferred material for heat stabilization. Use of the isooctylmaleate ester is normally restricted to those applications where a lower odor and better physical properties are required. In such applications, the maleate ester is used in combination with the mercaptoester.

Typical uses of rigid and semirigid PVC for food usage are as film wrapping (for meats, fruit, produce, etc.), vacuum packs, rigid trays and produce pre-packs.

In the areas of rigid and semirigid sheet and film, one other organotin heat stabilizer has FDA approval for PVC intended to contact food. This material is butylthiostannoic acid (BTSA). Its only utility, thus far, is in sheet and film and is not used in PVC food bottles. BTSA, and mixtures with butylstannoic acid, have been used since about 1962 in Germany for PVC sheet and film in food packaging. Later research showed that, when properly prepared, BTSA was superior to the mixture and the butylstannoic acid was eliminated. A PVC film, called "Luvatherm," used BTSA as the heat stabilizer. It found wide usage in Germany and was exported to the United States. In 1965, Hoechst, who originally produced the film and BTSA, formed a joint operation with Stauffer Chemical to produce the film in Wilmington, Delaware. Later, in 1970, Hoechst purchased Stauffer's interest and gained sole control over the production of this film in the United States.

Table 14. ESTIMATED CONSUMPTION OF ORGANOTIN COMPOUNDS IN RIGID SHEET AND FILM FOR NONFOOD USES[a]

Year	Total PVC (million lb)[b]	Estimated quantity (million lb)			
		Bu-IOMA[c]	Me-IOMA[d]	Bu-maleate[e]	Total
Nonpackaging applications					
1965	37	0.08	-	0.03	0.11
1966	38	0.08	-	0.03	0.11
1967	41	0.09	-	0.03	0.12
1968	40	0.09	-	0.03	0.12
1969	50	0.15	-	0.05	0.20
1970	55	0.16	0.01	0.05	0.22
1971	55	0.14	0.01	0.07	0.22
1972	(55)	0.13	0.02	0.07	0.22
1973	(50)	0.13	0.01	0.06	0.20
1974	(48)	0.12	0.01	0.06	0.19
Packaging applications					
1965	6.8	0.12	-	-	0.12
1966	9.3	0.17	-	-	0.17
1967	11	0.20	-	-	0.20
1968	17	0.32	-	-	0.32
1969	34	0.65	-	-	0.65
1970	45	0.84	0.02	-	0.86
1971	50	0.91	0.04	-	0.95
1972	55	1.00	0.05	-	1.05
1973	50	0.90	0.05	-	0.95
1974	50	0.90	0.05	-	0.95

a/ Consumption figures calculated using percent tin stabilization, average phr, and individual compound percentage data supplied by compounders and producers; the principal heat stabilizers for nonpackaging applications are materials other than organotin compounds.

b/ Source: Modern Plastics, January issues; Modern Packaging Encyclopedia, December 1974; data in ( ) estimated by MRI on figures for past years and general market trends.

c/ Dibutyltin-S,S'-bis(isooctylmercaptoacetate) and blends.

d/ Dimethyltin-S,S'-bis(isooctylmercaptoacetate) and blends.

e/ Dibutyltin isooctylmaleate ester.

Table 15. ESTIMATED ORGANOTIN CONSUMPTION IN SEMIRIGID SHEET AND FILM FOR NONFOOD APPLICATIONS[a]

Year	Total PVC (million lb)[b]	Estimated quantity (million lb)		
		Bu-IOMA[c]	Me-IOMA[d]	Total
1965	(7.5)	0.15	-	0.15
1966	(8.5)	0.17	-	0.17
1967	(10)	0.20	-	0.20
1968	12	0.24	-	0.24
1969	15	0.30	-	0.30
1970	17	0.33	0.01	0.34
1971	20	0.38	0.02	0.40
1972	(24)	0.46	0.02	0.48
1973	(27)	0.51	0.03	0.54
1974	(27)	0.51	0.03	0.54

a/ Consumption figures calculated using percent tin stabilization, average phr, and individual compound percentage data supplied by compounders and producers; the principal heat stabilizers for nonpackaging applications are materials other than organotin compounds.

b/ Source: Modern Plastics, January issues; data in ( ) are extrapolated for 1965 to 1967 from subsequent years; 1972 to 1974 data are estimates from PVC compounders for this area.

c/ Dibutyltin-S,S'-bis(isooctylmercaptoacetate) and blends.

d/ Dimethyltin-S,S'-bis(isooctylmercaptoacetate) and blends.

"Luvatherm" or "Genotherm" film requires special calendering equipment and special techniques as compared to film normally made in the U.S. Its use in the U.S. is rather limited and confined only to the Hoechst type film as they hold all patents on the products as well as a process claim on the PVC film. The film is used primarily for packaging cold meat. American Can Company is the largest consumer of this film.

As stated previously, Cincinnati Milacron has petitioned the FDA for approval to use a dimethyl/monomethyltin isooctylmercaptoacetate blend, probably in a 80:20 di- to mono ratio, as a heat stabilizer in PVC containers for dry food. Such combinations have received prior approval in England, Germany, and other European countries.

Table 16 lists the estimated annual quantities of di(n-octyl)tin-S,S'-bis(isooctylmercaptoacetate) and di(n-octyl)tin maleate polymer used in rigid and semirigid PVC sheet and film intended to contact food.

The major compounders and producers of rigid and semirigid PVC sheet and film for food and nonfood usage are B. F. Goodrich Chemical Company, Tenneco Chemicals Company, Union Carbide Corporation, General Tire and Rubber Company, and American Hoechst. These companies probably control 85 to 90% of this particular market for organotin heat stabilizers.

CATALYSTS

The catalytic usage of organotins is found mainly in the rigid polyurethane foam and in the room temperature vulcanization of silicon elastomer industries. In both of these areas, the major organotin compound is dibutyltin dilaurate. For the purposes of this study, stannous octoate is not considered to be an organotin compound but rather a tin salt. Argus Chemical Company has a dibutyltin X compound currently on the market; X probably is the dodecanate. The synthetic dodecanoic acid is manufactured by Exxon. This material was introduced 2 to 3 years ago and is estimated by sources in the area of catalysts to have captured about 30% of the current market relative to dibutyltin dilaurate. Its primary advantage is at low temperature where it is a liquid as opposed to the dilaurate, which tends to solidify. In past years, dibutytin dioctoate may have been used in very small quantities as a catalyst.

Rigid Polyurethane Foam

There are two methods of producing rigid urethane foam: the one shot method and the prepolymer technique.[10] In either method a synergistic mixture of a tertiary amine and a tin catalyst is added to an aromatic isocyanate, such as toluene diisocyanate (TDI), and a polyhydroxyl compound, i.e., containing more than two hydroxyl (OH) groups.

Table 16. ESTIMATED CONSUMPTION OF OCTYLTINS AND BTSA IN RIGID AND SEMIRIGID PVC SHEET AND FILM FOR FOOD USE[a]

Year	Total PVC (million lb)[b]	Estimated quantity (million lb)			
		Octyl-IOMA[c]	Octyl-maleate[d]	BTSA	Total
1968	17	0.14	0.01	0.2	0.35
1969	22	0.16	0.02	0.2	0.38
1970	28	0.26	0.03	0.1	0.39
1971	33.4	0.30	0.05	0.1	0.45
1972	39.2	0.40	0.05	0.1	0.55
1973	46	0.47	0.05	0.1	0.62
1974	27.2	0.28	0.05	0.1	0.43

a/ Consumption figures calculated using percent tin stabilization, average phr, and individual compound percentage data supplied by compounders and producers; differences in phr account for the apparent discrepancy in consumption data for 1970 and 1974.

b/ Source: Modern Plastics, January issues, Modern Packaging Encyclopedia, December 1974; figures adjusted for food and nonfood use through discussion with a major resin compounder.

c/ Di(n-octyl)tin-S,S'-bis(isooctylmercaptoacetate).

d/ Di(n-octyl)tin maleate polymer.

In rigid polyurethane the organotin compounds are primarily restricted to the polyester type foams and the polyethers are based on stannous octoate or stannous oleate type catalysts. Dibutyltin compounds oxidize the polyethers, resulting in foam degradation.

One shot method: In this method, the liquid reactants are fed from stock drums into a special injection machine via two synchronized meter pumps under varying pressures, where the liquids are mixed and dispensed through a nozzel.[10] In one shot applications, the machine can be adjusted to dispense a fixed amount of the reaction mixture, which is then introduced into a mold or spraygun according to the particular end usage.[11] A dispensing machine typically provides for recycling the ingredients to and from the chemical storage tanks, a cleaning solvent-flush system of methylene chloride, and temperature control.

For personnel in contact with the catalyst, the same precautions should be observed as for the PVC resin compounding, i.e., eye goggles, rubber gloves, overalls, and a dust mask.

Prepolymer method: This technique involves premixing of the isocyanate with some of the polyol to provide a formulation with the desired foam action when the mixture is dispensed and catalyzed.[10] This method allows for the two-component packaging of a variety of formulations. These two-component packaged urethane systems may range in quantity from large tank cars to the more commonly used 55 gal. drums for on-site dispensing by the user.

The major producers of rigid polyurethane foams and their total isocyanate capacities are listed in Table 17. These companies combine to supply over 50% of the total rigid polyurethane market; the remainder is supplied by numerous small companies.

RTV Silicone Elastomers[12]

Two-pack products are supplied in separate containers, e.g., a catalyst solution and the siloxane polymer, which is mixed with a filler to control the consistency of the uncured products. A suitable cross linking agent is added to either the filled polydimethylsiloxane or the catalyst. Premixing of the individual constituents and subsequent final mixing of reactants is done in a manner similar to that of the prepolymer polyurethane foam method. In cases where large quantities are involved, the catalyst is stored in bulk form where it is diluted with silicone polymer and filtered to make addition easier and exact quantities less critical.

Table 17. MAJOR RIGID POLYURETHANE FOAM PRODUCERS[a]

Company	Location	Total isocyanate capacity ($x\ 10^6$ lb)[b]
Mobay Chemical Company Polyurethane Division	Santa Anna, California	300
Upjohn Company		
CPR Division	Fairbanks, Alaska	300
Polymer Chemicals Division	Torrance, California	
BASF Wyandotte Corporation Industrial Chemicals Group	Wyandotte, Michigan	100
Dow Chemical Company	Ironton, Ohio	100 (1976)

a/ Urethane Plastics and Products, 4(10):3, October 1974.

b/ All isocyanate quantities are in 2,4-toluene diisocyanate (TDI), except for Upjohn and 100 x 10^6 lb for Mobay which is methylene-bis(4-phenyl isocyanate) (MDI).

In the one-pack systems, the reactants are pumped through automatic weighing devices to a blender. After mixing, the uncured product is dispensed in cartridges, tubes, or other packages in a manner similar to the one shot method for urethane foams. Many firms supply special dispensing equipment that protects any of the remaining mixture from exposure to air. The one-pack system may also be in the form of a dispersion in an organic solvent, which will remain stable for a sufficient length of time for the silicone mixture to be applied by spraying or painting.

The major manufacturers, their location and approximate shares of the silicone elastomer market are shown in Table 18. Information relating to the market shares was obtained from sources in the silicone production facet of the industry.

Table 18. MAJOR SILICONE ELASTOMER PRODUCERS

Producer	% of Market	Location
Dow Corning Corporation (Silastic)	~ 45	Costa Mesa, California Midland, Michigan Trumball, Connecticut
General Electric Company Silicone Products Department	~ 40	Waterford, New York
Stauffer Chemical Company SWS Silicones Division	~ 10	Adrian, Michigan Matawan, New Jersey

Note: The remaining 5% of the market includes imports and minor contributors, e.g., Union Carbide, Eagle Picher, etc.

Table 19 shows the estimated annual quantities of dibutyltin dilaurate and dibutyltin X consumed as catalysts for rigid polyurethane foams and for dibutyltin dilaurate as a catalyst for RTV silicone elastomers.

Table 19. ESTIMATED CONSUMPTION OF ORGANOTIN COMPOUNDS AS CATALYSTS[a]

Year	Rigid polyurethane foam[b] DBTDL[d]	Rigid polyurethane foam[b] DBTX[e]	RTV silicone elastomers[c] DBTDL	Total
1965	0.01	-	0.003	0.01
1966	0.03	-	0.004	0.03
1967	0.06	-	0.003	0.06
1968	0.10	-	0.003	0.10
1969	0.20	-	0.005	0.21
1970	0.27	-	0.005	0.28
1971	0.35	-	0.007	0.36
1972	0.4	(0.1)	0.012	0.51
1973	0.5	(0.2)	0.017	0.72
1974	0.6	(0.3)	0.018	0.92

a/ Quantities in million pounds.

b/ Polyurethane foam production data: Modern Plastics, January issues; adjustments for spray and nonspray applications, quantities organotin stabilized, and catalyst concentrations were obtained from sources at M&T, Cook Paint and Varnish Company and Mobay Chemical Company.

c/ Significant figures are shown to denote the very low quantities, not necessarily accuracy; silicone elastomer consumption data: International Trade commission data; adjustments for one- and two-pack systems and catalyst concentrations from General Electric Company.

d/ Dibutyltin dilaurate.

e/ Dibutyltin X (X ≃ dodecanate).

BIOCIDAL APPLICATION

Organotin compounds used for biocidal applications are the trialkyl- or triaryltin materials; no mono- or dialkyltin compounds are used at the present time. Tricyclohexyltin hydroxide and triphenyltin hydroxide are two of the major compounds with biocidal applications but fall outside the scope of this study. The third major compound is bis(tributyltin)oxide, commonly referred to as TBTO. Since 1970, tributyltin fluoride (TBTF) has found some usage, particularly in antifouling paints, but all other trialkyltin compounds, states as possessing biocidal applications,[13] have very highly specialized end uses and only minor quantities are consumed.

At the present time, the major use of TBTO is as the active ingredient in antifouling marine paints. The importance to the shipping industry of the elimination of marine growth, such as barnacles, tubeworms, shells, and algae, can be illustrated by the following example. A merchant ship, immediately out of dry-dock will cruise in temperate waters at 20 knots. After 6 months in these waters, a 40% increase in fuel consumption is required to maintain the 20-knot speed.[14] Several publications are available which present discussions of the use of organotin compounds, basically TBTO, in antifouling paints[14-17] and the reader is referred to these articles, and the references contained therein, in lieu of a detailed discussion here. Although copper (I) oxide is still the major compound used in this area, it does have a number of deficiencies.[18] In addition to some aesthetic values, bis(tributyltin)oxide has a lower leaching rate than copper compounds.[19] TBTO finds its greatest utility in vinyl paint formulations. The material has little compatibility with chlorinated rubber; therefore it is preferable to use a solid organotin compound, such as TBTF, in chlorinated rubber paints. TBTO is also a component of No-Foul®, a proprietary B. F. Goodrich neoprene sheet, which is applied to ship bottoms by use of an adhesive. At the present time, the primary use of No-Foul® is by the U.S. Navy but Goodrich anticipates an advertising campaign to broaden its usage.

Two other current uses of TBTO which employ appreciable quantities of this material are as a mildew preventative (mildewcide) and fungicide in water or emulsion paints, particularly those based on vinyl acetate and copolymers, and as an additive to cooling water in industrial plants. The usage in the paint systems has been increasing during the past 2 to 3 years, whereas the use in industrial cooling water has remained rather static.

Other frequently cited biocidal applications include textile protection, wood preservation, bactericide in the paper mill industry, biocide for plastics, molluscicide, and hospital disinfectant.[19] Relatively small quantities of TBTO were used over the last 10 years for textile protection and as a hospital disinfectant but these uses have declined very rapidly and very small quantities, if any, are used at the present time. Organotin compounds have never been used to any extent for wood preservation in the U.S. although it is used in England and Europe. Very little, if any, organotin compounds are consumed as biocides in plastics. In 1965 and 1966, approximately 400,000 lb/year of TBTO were used in the paper mill industry as a bactericide in the pulping operation. While TBTO was very effective in this operation, it was found to be substantive on cellulose, which removed the TBTO from the pulping operation, and hence, decreased its bactericidal action. When no satisfactory solution could be found for this problem, the use of TBTO decreased markedly in 1967 and has not been used to any extent since that time.

The area of molluscicides is definitely an area of the future. At the present time, there is no activity in this field on a commercial scale but considerable research is being conducted. A widespread tropical disease, bilharzia, is caused by certain species of trematodes, which are carried by freshwater snails.[19] It is currently estimated that over 1 million people suffer from this disease, particularly in underdeveloped tropical countries. TBTO has been found to be effective in eradicating the snails but, to be effective, a continuous, low concentration (1 ppm) of TBTO must be introduced to the surface water. A system has been developed, in which TBTO is incorporated into vulcanized elastomer pellets. These pellets are spread over the surface of the water and the TBTO diffuses slowly from the elastomer at a concentration sufficient to kill the snails without harming fish or aquatic plants.[19]

Tributyltin fluoride was introduced in 1970 and is used only as an ingredient in antifouling marine paints. Tributyltin chloride has been tested as a rodent repellant for telephone wire cables and other similar applications. M&T Chemicals tested this material for the U.S. Army Signal Corp for use against termites, rats, and other rodents, particularly in jungle warfare. It is not known if any commercial usage is being made of this material at the present time.

M&T Chemicals is the sole U.S. producer of the trialkyltin compounds used in biocidal applications; hence it is very difficult to obtain information relative to the production quantities of these compounds. According to the weekly import data published in the Chemical Marketing Reporter, approximate imports of TBTO, TBTF, and tributyltin chloride (TBTCl) are shown on the following page for 1972, 1973, and 1974.

IMPORT DATA

Year	Compound	Origin	Quantity (lb)
1974	TBTO	Germany	82,756
1973	TBTO	Germany	9,834
	TBTF	Japan	4,940
	TBTCl	Japan	2,900
1972	TBTO	Japan	56,358
	TBTF	Japan	9,140
	TBTCl	Japan	2,320

Domestic production of TBTO is estimated by sources closely associated with the biocidal area to have been 500,000 lb in 1965 and 1966. Because of decreased usage in the paper mill industry, quantities in 1967 fell to about 100,000 lb. Since that time, the domestic production has slowly risen to a value of about 500,000 lb in 1974.[20] Other sources, who wish to remain anonymous, very familiar with TBTO production and consumption indicate that the total in 1974 may be approximately twice that stated by M&T.

Tributyltin fluoride (TBTF) and bis(tributyltin)oxide (TBTO) have been granted full registration by the Environmental Protection Agency and any company selling either material or an antifouling paint containing these materials must have label directions for their safe usage, procedures in case of accident, and disposal of the empty container.[14] In a manufacturing facility, regardless of the end product, the use of eye goggles, rubber gloves, and longsleeved overalls should be employed. For operations involving large quantities of these materials, a dust mask or air hood should also be worn.[16]

In spray painting objects with antifouling coatings, containing either TBTO or TBTF, airless spray equipment is recommended to minimize overspray. Personnel involved in the spraying should be adequately covered (stated above) to preclude eye and skin contact, as well as inhalation of the spray mist. A full-face, air-supplied respirator is recommended. Other personnel within a 25-ft radius or 100-ft downwind from the object being coated should also be protected against eye or skin contact and inhalation.[15]

For 1972, an approximate percentage breakdown of TBTO by use area would be: 40% marine antifoulants; 25% paint additive; 25% industrial cooling water, and 10% miscellaneous uses. The last 2 years have seen an increase in the domestic consumption of compounds with biocidal applications.

The major formulators of antifouling coatings and paints, containing TBTO or TBTF, are given below:

* International Paint Company, Inc.
  New York, New York

* Celanese Coatings and Speciality Chemicals Company
  Devoe Paint Division
  Louisville, Kentucky

* Mobil Chemical Company
  Mobil Chemical Coatings Division
  New York, New York

* Carboline Company
  Admiral Paint Company, Inc., subsidiary
  Lake Charles, Louisiana

* Exxon Oil Company
  Houston, Texas

* B. F. Goodrich Chemical Company
  Akron, Ohio
  Manufacturers of No-Foul®

Other minor formulators of TBTO and TBTF antifouling coatings and paints are Farboil Company, Division of Beatrice Foods Company, Baltimore, Maryland; Henkel, Inc., Teaneck, New Jersey; Baltimore Paint and Chemical Corporation, subsidiary of Elt, Inc., Baltimore, Maryland; and Standard Paint and Varnish Company, subsidiary of Ogden Corporation, Harvey, Louisiana.

Commercial production of tributyltin fluoride began in 1970 and by 1974 had reached a value of approximately 120,000 lb/year.[20/] To our knowledge, tributyltin chloride is produced only in very small quantities.

MISCELLANEOUS SPECIALIZED USES

In this subsection, use areas will be discussed which consume relatively small quantities of organotin compounds or which encompass the use of a single compound. Such areas are anthelmintics, fiber stabilization, and exportation.

Anthelmintic and Toxcidiostat

Dibutyltin dilaurate is used as an anthelmintic and growth stimulant for poultry and as a toxcidiostat for young turkeys. The largest, and perhaps sole, consumer in the U.S. is Salsbury Laboratories in Charles City, Iowa. According to Salsbury,[21] the poultry anthelmintic, "Wormal," is produced in granular and tablet form and is the only tapeworm application approved by the FDA. Two forms of the toxcidiostat for turkeys is produced: "Tinostat" and "Polystat." Of these three formulations, the poultry anthelmintic and two toxcidiostats, about 15% of the total annual production is exported, primarily to Canada, and the remainder used in the U.S. Consumption of dibutyltin dilaurate in these areas ranged from 75 tons (0.15×10^6 lb) in 1965 to 120 tons (0.24×10^6 lb) in 1974. During the intervening years, the annual consumption was basically linear with time.

Fiber Stabilization

Within the past 10 years, quantities of dibutyltin oxide and a specialized dibutyltin maleate ester have been used for the stabilization of certain types of acrylic fibers, especially those where vinyl chloride was used with the acrylic to enhance the fire resistancy of the finished fiber. Dibutyltin oxide was the preferred compound, as it was the least extractable material during the spinning process, and thus the most efficient compound.

The major users of these compounds for fiber stabilization are Monsanto and Eastman Kodak, each using approximately equal amounts. In 1970, a total of about 800,000 lb of these two materials were used.

Exportation

During the past 10 years, exportation quantities have remained in the range of 4 to 5% of the total annual U.S. production of the materials under study. Exportation has been only in the form of the end products, i.e., no intermediates such as the tetraalkyltins, alkyltin oxides (except TBTO), etc. Countries to which exportation occurs include Taiwan, Singapore, and South American countries. The exportation figures stated

above, which are estimates by the U.S. manufacturers of organotin compounds, do not include any intracompany transfers of materials. Since the three major companies have subsidiaries in foreign countries, considerable transfer of material occurs but the quantities of such material would be extremely difficult to ascertain.

REFERENCES TO SECTION VII

1. Stimpfl, R. J., "Popular Plastics," p. 33, May 1973.

2. Sawyer, A. K., Ed., Organotin Compounds, 3rd Ed., Marcel Dekker, Inc., New York, p. 936 (1971) (and references cited therein).

3. Modern Plastics Encyclopedia, McGraw-Hill, Inc., New York, p. 896 (1968).

4. Modern Plastics, McGraw-Hill, Inc., New York, September 1966.

5. MRI estimate based on data published in Modern Plastics, and contacts with industrial users of PVC resin, September 1975.

6. Estimates from Johnson Plastics Machinery, a large manufacturer of extrusion equipment.

7. Modern Plastics, McGraw-Hill, Inc., New York, p. 42, February 1975.

8. "Vinyl Chloride Polymers in Contact with Food," FR Doc. 75-23241, Federal Register, Vol. 40, September 3, 1975.

9. FR Doc. 75-15521, Federal Register, Vol. 40, June 16, 1975.

10. Tin and Its Uses, Vol. 90, No. 7 (1971).

11. Modern Plastics Encyclopedia, McGraw-Hill, Inc., New York, pp. 136-137 (1975).

12. Tin and Its Uses, Vol. 89, No. 5 (1971).

13. Poller, R. C., Chemistry of Organotin Compounds, Academic Press, New York, p. 274 (1970) (and references cited therein).

14. Vizgirda, R. J., Paint and Varnish Production, December 1972.

15. Sheldon, A. W., J. Paint Tech., 47(54) (1975).

16. Engelhart, J. E., and A. W. Sheldon, 15th Annual Marine Coatings Conference, Point Clear, Alabama, February 1975.

17. Beiter, C. B., et al., Symposium on Marine and Fresh Water Pesticides, American Chemical Society Meeting, Atlantic City, New Jersey, August 1974.

18. Bufkin, B. G., R. D. Bounds, and S. F. Thames, Paint and Varnish Production, p. 25, February 1974.

19. Bokranz, A., and H. Plum, Fortschritte der Chem. Forschung, 16:366 (1971).

20. Personal written communication from Mr. A. A. Keller, M&T Chemicals.

21. Personal communication with Mr. Anderson, Salsbury Laboratories, Charles City, Iowa.

SECTION VIII

FUTURE PRODUCTION AND UTILIZATION

This is an extremely difficult area to assess at the present time as its future is, quite obviously, directly related to the future of poly(vinyl chloride). The complicating factors are the restrictions on vinyl chloride monomer and the resultant effect on PVC production, the recent FDA proposal to restrict the use of PVC in food packaging and possibly in potable water pipe, and the general economic conditions prevailing at the present time. The economic recession has led to a severe decrease in the construction industry, which consumes large quantities of PVC pipe, conduit, fittings, etc. These areas, in turn, are the largest consumers of alkyltin heat stabilizers. Future consumption of heat stabilizers will be directly related to the recovery of economic conditions, in particular the construction industry.

Prior to the recession, it can be stated that the consumption of alkyltin heat stabilizers increased from 8.3 million pounds in 1969 to 17.0 million pounds in 1973. During this same time period, the production of poly(vinyl chloride) increased from 238 to 1,148 million pounds. However, with the advent of new higher efficiency materials and the increased usage of twin screw extruders, the actual quantity of alkyltin heat stabilizer per pound of rigid PVC has decreased. Twin screw extruders presently account for approximately 75% of all extruders. Since these machines are not presently applicable to all extrusion processes, the growth of the twin screw extruder may have reached a plateau. Further developments to decrease the quantity of alkyltin heat stabilizer used per pound of poly(vinyl chloride) will probably occur in new, more efficient heat stabilizers rather than in new equipment.

Further consumption of alkyltin compounds as urethane and silicone catalysts will probably continue to progress at the same, rather slow, rate it exhibited during the past 10 years. Newer, more suitable alkyltin compounds will probably be developed but no real increase in market share is foreseen.

Biodical applications, in particular antifouling paints, is a rather difficult area to assess because production of these compounds has been thus far entirely the domain of M&T Chemicals. This area will be treated in more detail later in this section.

HEAT STABILIZERS

A recent forecast of poly(vinyl chloride) end use markets in 1978 and 1980 predicted that the total consumption of PVC would be 6,330 million pounds in 1978 and 6,820 million pounds in 1980.[1] Linear extrapolation of these values shows a potential consumption of 7,800 million pounds by 1984.

The consumption of poly(vinyl chloride) in rigid pipe and conduit, as well as the total consumption of alkyltin compounds as heat stabilizers, are shown in Figure 2 for the years 1965 to 1974. The similarity in the shapes of the two curves is striking but not entirely unexpected, since rigid pipe and conduit has consistently been a major area for the consumption of alkyltin heat stabilizers. Since 1972, this use area has consumed approximately 38% of the annual production of alkyltin heat stabilizers. A recent article on pipe and conduit projected the consumption of PVC in pipe and conduit in 1975 and 1980 to be 1,349 million pounds and 2,108 million pounds, respectively.[2] This estimate, however, was based on a 1974 consumption of 1,221 million pounds. Data from the Plastic Pipe Institute state that the 1974 consumption of PVC in pipe and conduit was 1,066 million pounds. Adjusting the Modern Plastics projected figures to a 1974 base value of 1,066 million pounds yields a 1975 figure of 1,178 million pounds and a 1980 value of 1,840 million pounds. Extrapolation of these values, as shown in Figure 2, projects a consumption of 2,360 million pounds of PVC in pipe and conduit in 1984.

As a check on the extrapolated 1984 quantities for total PVC consumption and the value for PVC in pipe and conduit, the ratios of the two quantities were calculated for the period 1965 to 1974. Using the 1980 ratio from the two cited projections and extrapolation shows that in 1984, 30.5% of the total PVC consumption will be in pipe and conduit. The extrapolated 1984 figure for total PVC consumption was 7,800 million pounds; 30.5% of this value is 2,379 million pounds, which is in good agreement with the 1984 value of 2,360 million pounds from the adjusted Modern Plastics data.

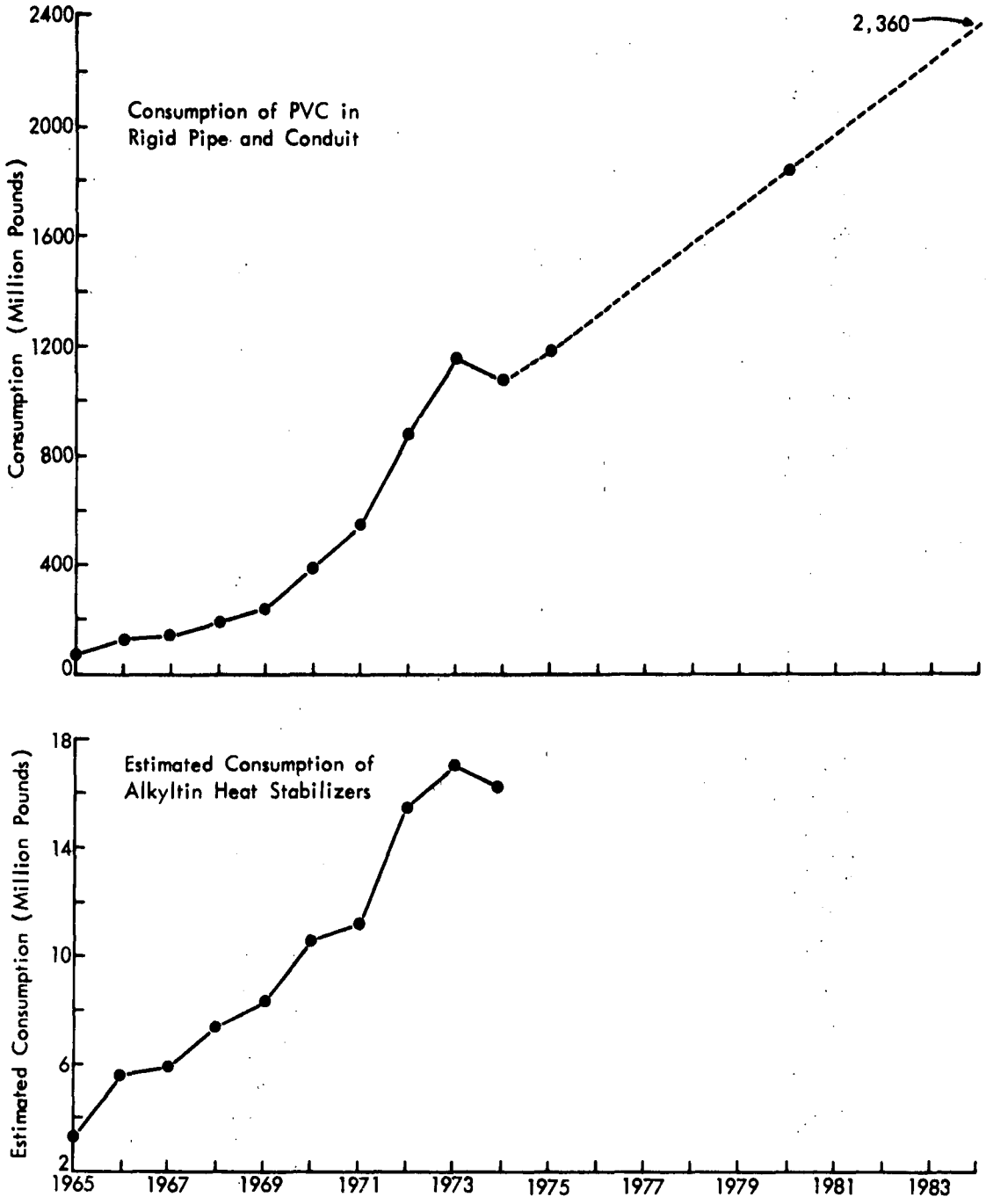

Figure 2. Consumption of PVC in Rigid Pipe and Conduit and Estimated Consumption of Alkyltin Compounds as Heat Stabilizers.

During the past 3 years, the percentage of total consumption of alkyltin heat stabilizers in rigid pipe and conduit has remained relatively constant in the range of 45 to 48%. Using an average concentration of approximately 0.6 phr and the estimated 2,360 to 2,379 million pounds of PVC resin in pipe and conduit in 1984, a consumption of 14.2 to 14.3 million pounds of alkyltin heat stabilizers in pipe and conduit is calculated. Since 1965, the area of pipe and conduit has accounted for at least 40% of the total annual consumption of alkyltin heat stabilizers. If this 40% figure can be assumed for 1984, a total annual consumption of about 36 million pounds is projected.

A more simplified approach would be to take the ratio of the 1974 PVC resin consumption in pipe and conduit to the projected 1984 value and multiply this figure times the total 1974 consumption of alkyltin compounds as heat stabilizers. This procedure leads to a value of approximately 36.0 million pounds in 1984.

These rather elementary calculations show that, based on a 1974 consumption of 16.2 million pounds, the total quantity of alkyltin compounds consumed as heat stabilizers in 1984 would be in the range of approximately 36 million pounds. More realistically, perhaps a range of 35 to 45 million pounds in 1984 should be projected in view of the simplicity of the calculations. As stated earlier in this section, any projections of consumption in the area of heat stabilizers 10 years in advance should be viewed as rather tenuous estimates due to the uncertainties in the future of poly(vinyl chloride).

With respect to specific alkyltin compounds, the situation is probably even more uncertain than the projections for total heat stabilizers. Based on past performance, the two major materials will probably continue to be the methyl and butyltin isooctylmercaptoacetates and their blends.

The nonsulfur alkyltin compounds, exemplified by the dibutyltin octylmaleate, have played a relatively minor role as heat stabilizers and probably will continue this role. In 1974 approximately 100,000 lb of the octylmaleate were consumed as heat stabilizers. This quantity may double to about 200,000 by 1984, but not significant break through in the use of these compounds is envisioned to increase their share of the market.

Dibutyltin-bis(laurylmercaptide) is used in pipe and conduit, injection molding, rigid siding, and other extruded profiles. It would not be considered the major heat stabilizer in any of these use areas; its major utility lies in its good lubricating properties rather than

its heat stabilization properties. During the past 10 years, the consumption of the laurylmercaptide has ranged from about 1 to 1.5 million pounds per year. The production of this compound in 1984 will be very dependent upon the production of rigid pipe and conduit and pipe fittings. If current projections are correct, pipe and conduit and pipe fittings will increase by slightly over 100% by 1984. Based on these figures, the production of dibutyltin-bis(laurylmercaptide) should be in the range of 2.5 to 3.0 million pounds in 1984.

Currently the sole use of the two octyltin compounds are in PVC intended to contact food. In view of the recent FDA proposed restrictions, it would be extremely difficult to predict any future consumption figures for these materials. It is known that the octyl compounds are virtually nontoxic ($LD_{50} > 1,000$) and have low odor levels during processing. From sources closely associated with the manufacturing segment of the organotin industry, it has been learned that not everyone is thoroughly convinced of the nontoxicity of the methyl and butyltin isooctylmercaptoacetates. It is also a fact that odor production can be a problem during processing with both the methyl and butyl compounds, particularly the methyl compounds. It may be that a future use of the octyl compounds might be in conjunction with the methyl or butyl compounds to reduce possible toxicity and odor production.

During the past 2 years, the methyl and butyltin isooctylmercaptoacetates (plus blends) have accounted for over 80% of the total consumption of alkyltin heat stabilizers. There is no reason to believe that this percentage will decrease during the next 10 years barring the introduction of a new compound or compounds that could capture an appreciable share of the market. Assuming that this 80+% value holds true, then by 1984 the combined production of these two systems could be 32 to 36 million pounds. The consumption of the methyltin systems has been growing rapidly, particularly in pipe and conduit, and in 1974 an estimated 4.5 million pounds were used as compared to about 9.3 million pounds for the butyltin systems. The present gap between the two systems could continue to narrow but this is difficult to predict since the two systems compete directly in almost all use areas. If an estimate is necessary, perhaps a 60 to 40% division between the butyltins and methyltins might occur but this is a very tenuous estimate.

CATALYSTS

This area should not experience any unexpected increases in usage during the next 10 years. It has been an area of steady but low consumption during the past 10 years, particularly with respect to silicone elastomers.

In 1974, only approximately 20,000 lb of alkyltin compounds, in particular dibutyltin dilaurate, were used as a catalyst for silicone elastomers. During the next 10 years, no appreciable increased share of the market is envisioned and the consumption should parallel the production of silicone elastomers. By 1984, the use of dibutyltin dilaurate may double to a value of approximately 40,000 lb. In the overall scope of the consumption of alkyltin compounds, this is very minor.

Consumption of dibutyltin dilaurate as a catalyst in polyurethane foams has been increasing by an estimated 200,000 lb/year during the past 3 years. Usage in this area is restricted to the polyester type foams so that the consumption is somewhat restricted. The urethane foam use area covers a very broad range of end products, but the primary area for alkyltin-catalyzed foams is in the construction area. Thus future consumption will be dictated to some extent by the overall economic recovery and the construction industry in particular.

Another possible factor which may play an important role in the future of urethane foams, and hence in the future of dibutyltin dilaurate, is the current controversy concerning the use of chlorofluorocarbons or "Freons®." The materials are used as blowing agents in many urethane foams. Should the future use of the chlorofluorocarbons be limited or restricted, this could have a detrimental effect on the entire urethane foam industry and consequently produce a decrease in catalyst consumption. At the present time, the outcome of the chlorofluorocarbon controversy is unclear so that the ramifications of its effect on the urethane foam industry are uncertain.

Considering the possible influences on the consumption of alkyltin compounds in urethane foam, it is very difficult to predict the possible consumption in 1984. From past consumption data, a figure of 2 to 2.5 million pounds in 1984 might be anticipated depending upon the future economic factors and the influence of the outcome of the chlorofluorocarbon controversy.

BIOCIDAL APPLICATIONS

This area should experience a fairly rapid relative growth rate during the next 10 years. The three primary areas of application are in antifouling paints and coatings, mildew preventative in water and emulsion paints, and as an additive to industrial cooling water.

Use of TBTO as an industrial cooling water additive will possibly show the lowest increase in consumption of any of the three areas. In 1972, an estimated 60,000 to 70,000 lb of TBTO were used in this area. By 1984, the consumption may be approximately 150,000 to 175,000 lb/year. This is a relatively minor area with limited prospects for enlarging its share of the market so its growth should progress at a rather slow, steady pace.

Consumption of TBTO in antifouling paints and coatings has been the largest use area in biocidal applications during the past 6 to 7 years. Its growth during that period has been at a rather steady pace as the promotion of organotin compounds in this area has been in progress for the last 10 years. M&T Chemicals estimates that the consumption of TBTO and TBTF in antifouling paints and coatings will grow 100% by 1980 and by another 100% by 1985.[37] If an estimated 200,000 to 250,000 lb of TBTO and 120,000 lb of TBTF were consumed in 1974, then by 1984 it is estimated that approximately 900,000 lb of TBTO and 475,000 lb of TBTF could be consumed in the production of antifouling paints and coatings. Future incorporation of organotin compounds for antifouling applications will probably be in the form of organotin polymeric coatings. This area is currently receiving considerable research attention, particularly by the U.S. Navy.

The area which has probably shown the greatest relative growth within the past 2 to 3 years is the use of TBTO as an additive to paints. Two problems, which exist in water and emulsion paints, are the bacterial growth during the shelf life of the paint leading to in-can spoilage before the paint is used and the growth of mold or mildew on paint films exposed to hot, moist climatic conditions. The anticipated growth rate of TBTO in this area should at least parallel that of the consumption in antifouling paints during the next 10 years. For an estimated consumption of approximately 120,000 lb in 1974, a projected annual consumption in 1984 may be expected to be in the range of 450,000 to 500,000 lb.

On the basis of the above discussion, a projected annual consumption of TBTO for biocidal applications in 1984 would be in the range of 1.5 to 1.9 million pounds and approximately 500,000 lb for tributyltin fluoride.

REFERENCES FOR SECTION VIII

1. Rubber World, p. 38, January 1975.

2. Modern Plastics, p. 42, February 1975.

3. Personal written communication from Mr. A. A. Keller, M&T Chemicals.

SECTION IX

MATERIAL BALANCE AND ENERGY CONSUMPTION

This section briefly discusses the total quantities of raw materials and energy required, as well as the quantities of waste material produced, for the manufacture of those alkyltin compounds for which production quantities were published or estimated by MRI. A reaction schematic for the various steps in the preparation of the alkyltin compounds in shown in Figure 3. The total production of all alkyltin compounds in this report was approximately 113 million pounds for the time period 1965 to 1974. Production quantities of each compound on a yearly basis was given previously in Table 1. In terms of total quantity the major compounds produced during the 10-year span were the butyltin isooctylmercaptoacetates and their blends, which accounted for approximately 63.5% of the production of all alkyltin compounds.

RAW MATERIALS

The calculated total quantity of each of the raw materials consumed in the manufacture of these alkyltin compounds is shown in Table 20 for each of the years of production from 1965 to 1974. It should be noted that some alkyltin compounds are produced from imported intermediates. These intermediates result in a reduction in the quantity of alkyl chloride, magnesium, and stannic chloride consumed as raw materials.

Since the butyltin isooctylmercaptoacetates accounted for well over half of all of the alkyltin compounds produced during the period 1965 to 1974, it is no surprise that the three raw materials consumed is the largest quantity, both on an annual basis and total for the 10-year period, are n-butyl chloride, stannic chloride, and isooctylmercaptoacetic acid. Except with the use of imported dialkyltin oxide intermediates, stannic chloride is consumed at one stage or another in all production processes of alkyltin compounds.

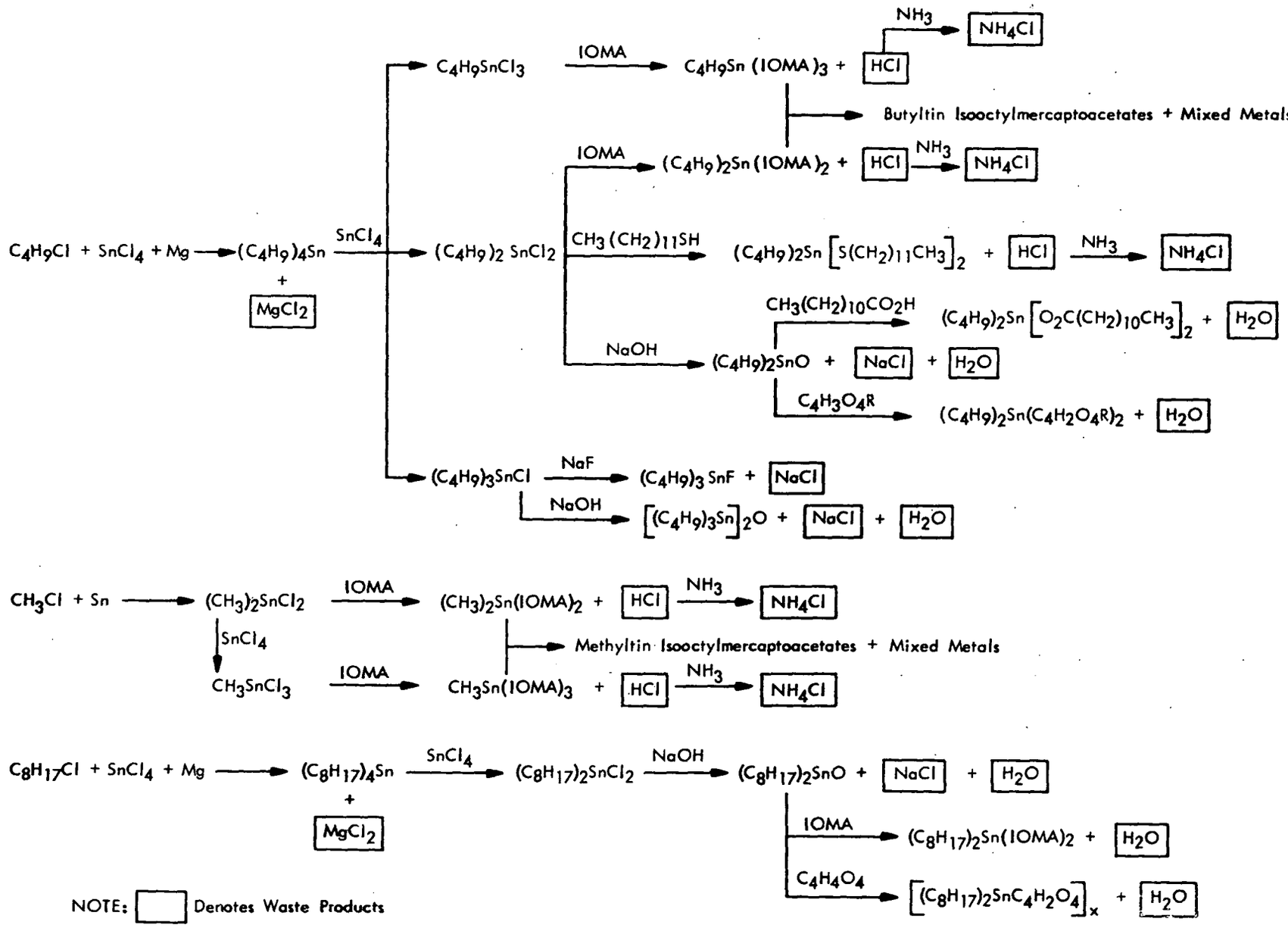

Figure 3. Reaction Schematic for the Preparation of Alkyltin Compounds.

Table 20. CONSUMPTION OF RAW MATERIALS, 1965 to 1974 (in million pounds)

Year	Sn	$SnCl_4$	Mg	NaF	NaOH	CH_3Cl	C_4H_9Cl	$C_8H_{17}Cl$	Lauric acid	Maleic acid	Alkylmaleic acid	Lauryl mercaptide	IOMA[a/]	Total
1965	-	1.719	0.333	-	0.070	-	1.269	-	0.191	-	0.143	0.637	1.600	5.962
1966	-	2.582	0.466	-	0.070	-	1.775	-	0.191	-	0.143	0.637	3.199	9.063
1967	-	2.310	0.379	-	0.018	-	1.443	-	0.222	-	0.315	0.573	3.408	8.668
1968	-	2.872	0.468	-	0.041	-	1.737	0.068	0.254	0.005	0.342	0.573	4.399	10.759
1969	-	3.272	0.535	-	0.054	-	1.981	0.088	0.318	0.008	0.375	0.573	5.047	12.251
1970	0.111	3.929	0.636	0.001	0.072	0.095	2.331	0.142	0.381	0.013	0.392	0.701	6.486	15.290
1971	0.223	4.005	0.647	0.004	0.082	0.189	2.355	0.165	0.445	0.015	0.412	0.701	6.982	16.225
1972	0.461	5.097	0.803	0.006	0.105	0.392	2.896	0.247	0.445	0.020	0.173	0.828	9.840	21.313
1973	0.668	5.232	0.824	0.010	0.108	0.568	2.999	0.213	0.572	0.020	0.146	0.828	10.735	22.923
1974	0.735	4.798	0.762	0.016	0.105	0.626	2.810	0.143	0.635	0.018	0.139	0.828	10.317	21.932
Total	2.198	35.816	5.853	0.037	0.725	1.870	21.596	1.066	3.654	0.099	2.580	6.879	62.013	144.386

a/ IOMA = Isooctylmercaptoacetic acid.

ENERGY CONSUMPTION

The calculated total energy consumed, as gas, steam and electricity, in the production of alkyltin compounds on an annual basis for the years 1965 to 1974 is given below in Table 21.

Table 21. ENERGY CONSUMPTION

Year	Gas ($x\ 10^6\ ft^3$)	Electricity ($x\ 10^6$ kw-hr)	Steam ($x\ 10^6$ lb)
1965	1.912	0.253	11.781
1966	3.062	0.397	18.681
1967	2.969	0.389	18.237
1968	3.718	0.488	22.866
1969	4.217	0.555	25.964
1970	5.103	0.670	30.794
1971	5.212	0.687	30.927
1972	6.746	0.872	38.715
1973	6.917	0.896	38.722
1974	6.262	0.811	34.375
Total	46.118	6.018	271.062

Energy consumption by type for the individual alkyltin compounds can be found in Section V in the discussion of the respective compound.

WASTE MATERIAL PRODUCED

The major waste materials or by-products from the production process are shown on the following page (Table 22) in million pounds on an annual basis and for the 10-year period.

Table 22. WASTE MATERIAL PRODUCTION

Year	$MgCl_2$	HCl	NaCl	H_2O	Total
1965	1.305	0.396	0.102	0.030	1.833
1966	1.825	0.676	0.102	0.030	2.633
1967	1.484	0.701	0.027	0.027	2.239
1968	1.832	0.860	0.060	0.039	2.791
1969	2.097	0.970	0.078	0.048	3.193
1970	2.493	1.233	0.107	0.059	3.892
1971	2.534	1.315	0.126	0.067	4.042
1972	3.145	1.819	0.161	0.068	5.193
1973	3.229	1.969	0.172	0.075	5.445
1974	2.987	1.919	0.176	0.070	5.152
Total	22.931	11.858	1.111	0.513	36.413

All of these waste materials are water-borne effluents which are discharged in municipal sewer systems. If the manufacturer produces the end product from the alkyl chloride starting material, these waste materials will generally undergo treatment in an aerated lagoon prior to discharge. However, if the manufacturer purchases the dialkyltin dichloride or oxide intermediate to produce the final product, the waste materials are generally discharged into the sewer system without treatment. One exception is Argus Chemical Company who discharge all of their aqueous waste material in a deep-well at the Taft, Louisiana, production facility. Aqueous effluents at their Brooklyn, New York, facility, however, are discharged in the sewer system.

Magnesium chloride, produced during the initial Grignard reaction, constitutes the largest single waste material. It is removed from the reaction mixture during the acidic wash of the tetraalkyltin product. On the basis of reaction stoichiometry, approximately 1.1 lb of magnesium chloride waste are produced per pound of tetraalkyltin. In Section X, the alkylaluminum process for preparing tetraalkyltin compounds is described. By this method, approximately 0.74 lb of $NaAlCl_4$ waste would be produced per pound of product or a net reduction in waste load of 0.36 lb/lb of product. The quantities of all other waste material would remain the same.

The hydrogen chloride produced during the reaction of the mercaptoacids with the alkyltin chlorides is neutralized either with ammonia, during the reaction process, or with sodium hydroxide to form the corresponding saline solution. Regardless of the type of neutralization, the final salt solution is discharged either to a deep-well or the sewer system. If ammonia is used, the neutralization would result in about 17.4 million pounds of ammonium chloride; for sodium hydroxide neutralization, the result would be about 19 million pounds of sodium chloride. Since both methods are used, the true quantity is somewhere between the figures of 17.4 and 19 million pounds.

In addition to the major waste effluents, relatively small quantities of solid waste products are produced. In the preparation of tetraoctyltin, aluminum chloride is used as a catalyst. Following the Grignard reaction and subsequent acidic wash, the white viscous material is removed from the reaction vessel. M&T Chemicals disposes of this material in a landfill. Argus Chemical did not specifically state their method of disposal but it is likely disposed in their deepwell. The total quantity of this material is thought to be quite small. If a concentration of 1% based on octyl chloride, which is about normal for catalytic quantities, is assumed and the total quantity of octyl chloride consumed from 1968 to 1974 is 1.066 million pounds, the total quantity of aluminum oxide trihydrate waste produced during this time period would be approximately 6,230 lb, or an average of 890 lb/year.

Stannic chloride is added during the production process at two points: (a) the initial preparation of the tetraalkyltin and (b) the comproportionation of the tetraalkyltin to the alkyltin chlorides. The major source of unreacted stannic chloride would be during the first step since the stoichiometry of the comproportionation reaction must be closely controlled to insure the proper mixture of final products. During the acidic wash of the tetraalkyltins, unreacted stannic chloride is removed in the washwater and during subsequent waste treatment converted to the hydrated oxide. The oxide is collected, stored, and sent to a smelter by M&T Chemicals. Cardinal Chemical Company, the other major producer by the Grignard method, did not respond to the inquiries concerning their waste treatment. It is assumed that Cardinal discharges this material along with the other waste materials. The actual quantities of unreacted stannic chloride discharged as waste material is unknown but assumed to be very small. This assumption is based on the fact that stannic chloride is, by far, the most expensive starting material and precautions would be taken to prevent its excessive usage.

A phosphonium catalyst is used in the "direct synthesis" of methyltin chlorides by both Cincinnati Milacron and Argus. Both of these companies periodically clean the spent catalyst from the reactors and have it removed by a contract hauler. Again, the exact quantities are unknown but thought to be small since the catalyst is used repeatedly for several batch "runs" before it is discarded.

The data presented thus far with respect to the raw materials consumed, the imported intermediates, waste materials produced, and the alkyltin production are summarized as shown:

Year	Total raw materials ($\times 10^6$ lb)	Equivalent starting material from imports ($\times 10^6$ lb)	Waste materials produced ($\times 10^6$ lb)	Total alkyltin production ($\times 10^6$ lb)
1965	5.962	0.186	1.833	4.315
1966	9.063	0.185	2.633	6.615
1967	8.668	0.296	2.239	6.725
1968	10.759	0.327	2.791	8.295
1969	12.251	0.387	3.193	9.445
1970	15.290	0.442	3.892	11.840
1971	16.225	0.487	4.042	12.670
1972	21.313	0.480	5.193	16.600
1973	22.923	0.522	5.445	18.000
1974	21.932	0.840	5.152	17.620

EXPOSURE TO MAN AND THE ENVIRONMENT

The possibility of exposure of man and the environment to alkyltin compounds are many, as indicated in the discussion of the uses of these compounds. Spurred by the unfortunate Stalinon incident in France in 1954, a wealth of information has been developed on the toxicological effects of a wide number of organotin compounds on a large number of subjects. Unfortunately, very little published information is available concerning the rates, quantities and distribution of loss of organotins to the environment.

In the following paragraphs, the discussion will be directed towards the quantities of alkyltin compounds exposed to man and the environment based on published data, the reactions of these compounds under environmental conditions, and finally a brief discussion of the personnel subjected to the greatest concentrations of alkyltin compounds.

Alkyltin compounds from rigid PVC: The use of alkyltin compounds as heat stabilizers for rigid, unplasticized PVC represents the largest use area of these compounds. Within the category of heat stabilizers, their use in rigid PVC pipe, conduit, and pipe fittings consumes approximately 50% of the total quantity produced.

Extraction data have been reported[1/] for commercial dibutyltin-bis(isooctylmercaptoacetate) and dimethyltin-bis(isooctylmercaptoacetate) for tests on poly(vinyl chloride) pipe in distilled water at 100°F for 72 hr. The results show an average extraction for the dibutyl compound to be 0.7 ppm and 0.5 ppm for the dimethyl compound; both results were obtained using a heat stabilizer concentration of 0.6 phr. Recent information from a major organotin manufacturer shows lower results for extraction tests for the same time and temperature stated in the previous data. These data show an aqueous extraction level of 0.11 ppm for dimethyltin isooctylmercaptoacetate, 0.04 ppm for the corresponding dibutyltin compound, and zero quantity for the dioctyltin isooctylmercaptoacetate. Using the data for the higher extraction rates and combining the two values, an average concentration of 0.6 mg/liter of water is obtained at 100°F after 72 hr. If assuming an average consumption of 2 liters of water per person per day, this equates to a daily intake of 1.2 mg of organotin from such a source. For an average body weight of 60 kg, the average daily intake would be 0.02 mg/kg. Using the lower extraction rates, a considerably smaller daily intake would be calculated. The acute oral toxicity of the dibutyl compound is 500 mg/kg, while that for the dimethyl compound is 620 mg/kg.[2/] Test conducted by or for a major organotin producer show these values to be 919 mg/kg for the dibutyl compound and 800 mg/kg for the dimethyl compound.

The above calculations obviously contain some overstatements but represent a maximum daily intake from this source. Very little, if any, potable water pipe within the household is PVC; its primary utility is for water mains and, according to a local supplier of PVC pipe, only then for towns of approximately 10,000 and under population. It is very doubtful that water would remain stationary at 100°F for 3 days in a water main. The assumed daily consumption of 2 liters of water per person is also probably an overstatement.

Poly(vinyl chloride) food containers, stabilized with dioctyltin compounds, probably present the most direct method for the introduction of an alkyltin compound into the human body. Piver[3/] has reported that the diffusivity of organotin stabilizers into liquid foods and biological fluids is approximately 10^{-12} cm^2/sec for rigid, unplasticized PVC containers. To provide a slightly different perspective, this diffusion constant (10^{-12} cm^2/sec = ~ 3×10^{-8} cm^2/hr) is comparable to many of

the constants found for the diffusion of metals into metals. Data in the review article by Piver[3] show that the extraction of dioctyltin-bis(isooctylmercaptoacetate) from PVC containers averages approximately 0.06 ppm (0.06 mg/liter of fluid) for many of the food products listed. These results were obtained after storage of the food in the PVC containers for 2 months at 30°C. Comparing these data to that for PVC pipe, it should be noted that the extracted quantities from PVC food containers is approximately 10 times less than that for pipe even under extended extraction time periods.

If data of this type are approximately applicable to other products produced from rigid, unplasticized poly(vinyl chloride), then it is rather apparent that the extent of exposure to the general public and the overall environment resulting from the use of dialkyltin compounds as heat stabilizers is small.

Alkyltin compounds as catalysts: The area of catalysts for urethane foams and silicone elastomers is basically very similar to the area of heat stabilizers in that the dialkyltin compounds are incorporated or entrapped in a fairly rigid structure and their exposure to the general public and the environment is dependent upon their diffusion through the structure to the surface. While no specific data are available, it is felt that these diffusion processes would probably be of the same order of magnitude as for the rigid poly(vinyl chloride). It should also be noted that the total quantities of dialkyltin compounds involved in this area are considerably less than those in rigid poly(vinyl chloride).

Biocidal and anthelmintic applications: The use of di- and trialkyltin in these two areas presents a situation in which the alkyltin compounds are much more readily available to the environment. For anthelmintic applications, dibutyltin dilaurate (LD_{50} = 175 mg/kg) is the only organotin compound used in this area. The tablets and granules containing the dibutyltin dilaurate active ingredient are considered a medication for poultry and it is presumed that these materials would be treated with care. However, due to the physical form of this medication, a relatively direct method of introduction of this alkyltin compound to man and the environment does exist. The total quantities of dibutyltin dilaurate used in this application ranged from 150,000 to 250,000 lb annually during the period 1965 to 1974.

The other major source of direct introduction into the environment is the use of trialkyltin compounds in antifouling paints and coatings. As a class, the trialkyltins are more toxic than the dialkyltins; monoalkyltins are considered to be the least toxic. Bis(tributyltin)oxide and tributyltin fluoride are the only alkyltin compounds used in this application.

It has been estimated by M&T Chemicals that 10 to 30% of the original trialkyltin concentration is still present in the coating at the time the spent coating is removed from the ship hull by sandblasting.[4/] The level of trialkyltin antifoulant in the sandblast grit was 0.05 to 0.2% by weight which, according to M&T, is unlikely to cause problems in shipyard use. The precise method of disposal of the sandblast grit is unknown but it is possible that a portion of the grit is collected and removed by a contract hauler and a portion is probably deposited in the water adjacent to the shipyard.

The major part of the trialkyltin compounds is leached from the coating directly into the seawater. If 3 years is assumed to be a usable lifetime for an antifoulant coating, then 70 to 90% of the original compound is released to the environment (seawater) during that time span. Taking an average loss of 80% during the 3 years and assuming a loss rate (for a 3:1 vinyl to rosin mixture[5/]) of 30% for the 1st year and 25% for each of the next 2 years, the approximate quantities of bis(tributyltin)oxide and tributyltin fluoride introduced to seawater can be calculated as shown below:

Year	Approximate total quantity used (lb)	Quantity released to seawater (lb)	Quantity in residual grit (lb)
1965	100,000	30,000+	-
1966	100,000	55,000+	-
1967	75,000	72,500	20,000
1968	90,000	70,750	20,000
1969	140,000	83,250	15,000
1970	151,000	102,800	18,000
1971	143,000	115,650	28,000
1972	150,000	118,500	30,200
1973	200,000	133,250	28,600
1974	320,000	183,500	30,000

In 1975, the total quantity of trialkyltin compound released to the seawater would be 130,000 lb from 1973 and 1974 plus 30% of the total quantity applied in 1975. Waste grit would contain 40,000 lb resulting from the removal of coatings applied in 1973. For 1965, the only quantity released to the environment shown is 30% of the total applied in 1965, and for 1966 the value shown is 30% of the 1966 quantity plus 25% of the 1965 value. To make these values consistent with the following years, the value for 1965 should include 25% of the total quantity

applied in 1963 and 1964. For 1966, 25% of the 1964 quantity should be added. For the quantities in residual sandblast grit, the 1965 quantity would be 20% of the total quantity applied in 1963 and the 1966 value would be 20% of the quantity applied in 1964. These simplified calculations inherently assume that all coatings are applied on January 1 of the respective year and that all spent coatings are removed on December 31 2 years hence. While these circumstances are unrealistic, the calculated figures will perhaps provide an indication of the order of magnitude for the quantities released to the environment by antifoulant coatings.

Reactions of alkyltin compounds in the environment: The results of studies of the degradation of alkyltin compounds show that the decomposition process occurs by successive dealkylation of the tin compound to produce stannic oxide (SnO_2). M&T Chemicals has stated that the degradation of tributyltin fluoride occurs by natural stress factors, such as ultraviolet light, heat, oxygen, and ozone, in the following manner:[4-7]

$$R_3SnF \xrightarrow[\text{Water}]{\text{Sea}} [R_3SnCl] \longrightarrow [R_3SnOH] \longrightarrow \underset{\text{TBTO}}{R_3SnOSnR_3} \qquad R = C_4H_9$$

$$R_3SnOSnR_3 + CO_2 \longrightarrow R_3SnO\overset{O}{\overset{\|}{C}}OSnR_3 \xrightarrow{UV} 2\ R_2SnO \xrightarrow{UV} RSn\begin{matrix} \diagup\!\!\diagup O \\ \diagdown OH \end{matrix} \xrightarrow{UV} SnO_2$$

The initial hydrolysis of the tributyltin fluoride occurs rapidly under very dilute conditions and the resultant bis(tributyltin)oxide is known to readily convert to a carbonate salt in the presence of carbon dioxide, which occurs in seawater exposed to air.[4,6,7] It would seem likely that the formation of the carbonate would occur in fresh water or under most situations where the material is exposed to air.

Organotin compounds bind strongly to soil and cellulosic materials and thus would be readily removed from waterway systems in which turbulence occurs to mix the silt and mud from the bottom with the water supply.[6]

Studies of the degradation of triphenyltin acetate by ultraviolet light show that after 60 hr irradiation, triphenyltin is 89% degraded to diphenyltin, monophenyltin and inorganic tin.[8] It has been stated that the half-life ($t_{1/2}$) for triphenyltin acetate on plant leaves in the field is approximately 4 days and that ensilage causes a complete breakdown to inorganic tin within 5 weeks.[9]

According to M&T Chemicals, any dialkyltin compounds present in the waste material are sufficiently degraded after 18 days in their waste treatment lagoon that the material can be safely discharged.[10]

Worker exposure: It has been stated by M&T Chemicals that manufacturing personnel will generally face the greatest potential hazard from organotin compounds.[4] This should also include personnel involved in the processing of materials containing alkyltin compounds. The potential for exposure to alkyltin compounds for man and the environment from the final consumer products containing these materials is certainly present. However, in view of the slow diffusion rates of alkyltins from the majority of the final products and the moderately rapid, if weeks can be considered moderately rapid, degradation of these materials to lower alkylated forms and to inorganic tin, the greatest potential for general exposure to the general public and the environment would appear to be in those instances when direct ingestion of alkyltins can occur.

Accidental exposures to the public within the immediate vicinity of production facilities obviously can occur and could lead to situations that may endanger the health and life of humans or animals. The incident at the methyltin production facility in Kentucky would serve as an example in which the loss of animal life occurred. The facility was voluntarily shut down and has not been restarted as of this date.

Almost all of the alkyltin compounds included in this study are eye and skin irritants and will cause irritation to the upper respiratory tract. Workers can be directly exposed to skin contact and inhalation of the fumes and particles of alkyltin compounds during the manufacture and handling of these materials, as well as the fumes emitted during the extrusion processes with PVC resin incorporating these heat stabilizers. Precautions employed by the manufacturers and processors to help protect workers from the effects of these compounds have been discussed earlier in this report.

Thus, in view of the available data, it would appear that the greatest potential for exposure and health effects of such exposures would occur with the workers. After the alkyltin compounds have been incorporated into the final consumer products, it would appear that, in general, the potential for exposure to man and the environment is small and not likely to pose a human or environmental health hazard.

REFERENCES FOR SECTION IX

1. Cincinnati Milacron Chemicals, Inc., U.S. Patent 3810868 (1974).

2. Bokranz, A., and H. Plum, Fortschritte der Chem. Forschung, 16, 366 (1971).

3. Piver, W. T., Environmental Health Perspectives, 4, 61, June 1973.

4. Engelhart, J. E., and A. W. Sheldon, 15th Annual Marine Coatings Conference, Point Clear, Alabama, February 1975.

5. Beiter, C. B., et al., Symposium on Marine and Fresh Water Pesticides, American Chemical Society Meeting, Atlantic City, New Jersey, August 1974.

6. Sheldon, A. W., J. Paint Tech., 47, 54 (1975).

7. Vizgirda, R. J., Paint and Varnish Production, December 1972.

8. Chapman, A. H., and J. W. Price, Int. Pest Control, pp. 11-12, January-February 1972.

9. Sawyer, A. K., Ed., Organotin Compounds, 3rd Ed., Marcel Dekker, Inc., New York (1971).

10. Personal communication, A. A. Keller, M&T Chemicals, Inc.

SECTION X

USE ALTERNATIVES

In this section, possible alternative methods of production and end-use materials are discussed. Topics include alternative raw materials and production processes, as well as alternative materials for the current end-uses of the organotin compounds.

ALTERNATIVE RAW MATERIALS

Very little work has been reported regarding new synthetic methods for the production of alkyltin compounds which could utilize present production facilities. The commercial market for these compounds is rather small (~ 17 million pounds) as compared to other commercial products in this same general area of PVC additives, e.g., alkyl and aryl phosphate esters are ~ 100 million pounds per year. Thus the alkyltin market is very competitive with each company seeking any slight advantage to increase their share of the market or profit margin. The present production methods have been refined over the years to produce alkyltin compounds in the most efficient manner at the lowest possible costs. Any alternative raw materials that could be suggested would result in a material being produced at a lower yield with more expensive raw materials than the present process.

ALTERNATIVE MANUFACTURING PROCESSES

It has been known for many years that alkyl aluminum compounds could be used as alkylating agents for stannic chloride to produce tetraalkyltins. However, it has only been within the last few years that alkyl aluminum compounds have been commerically available in large quantities for use in the Ziegler stereospecific polymerization of olefins. With the large quantities of alkyl aluminums available, an effort was made to utilize this process for the manufacture of tetraalkyltin compounds.

For the preparation of tetrabutyltin,[1] 35 parts by weight of tributyl aluminum and 11 parts by weight of NaCl are mixed into 60 parts by weight of methylene chloride. While stirring, a mixture of 30.4 parts by weight of stannic chloride in 60 parts by weight of methylene chloride is slowly added with the temperature being maintained between 40 and 150°C. After the reaction is complete, the methylene chloride solvent is removed by distillation. Thus, 39.6 parts by weight (97% yield) of the theoretical amount of tetrabutyltin is obtained. The addition of a complexing agent, NaCl, reacts with the aluminum chloride formed during the reaction and prevents its reaction to dealkylate the tetraalkyltin compound by the formation of a complex salt, i.e., $NaAlCl_4$. Other complexing agents, which may be utilized, include ethers and tertiary amines. After completion of the reaction, the tetraalkyltin compound can be separated from the complex salt by-product by decanting or centrifuging, since the complex salt is insoluble in the tetraalkyltin and, upon cooling, will settle to the bottom of the reactor. To the best of our knowledge, the production of tetraalkyltin compounds by this method is a batch process. Based on an estimated price of $1.00/lb for tributylaluminum,[2] $2.104/lb for stannic chloride (anhydrous),[3] and $1.99/100 lb for NaCl,[3] the calculated cost per pound of tetrabutyltin would be $2.41 (based only on raw material cost). The cost of methylene chloride solvent was not included since this material is stripped from the reactor and recycled. It should also be noted that for each pound of tetrabutyltin (or tetraoctyltin), 0.736 lb of waste $NaAlCl_4$ would be generated. The estimated cost of tri(n-octyl)aluminum is $1.50/lb for large scale purchases.[2]

Both tributylaluminum and tri(n-octyl)aluminum are liquids that must be stored, transferred, and reacted in the absence of air (O_2) or moisture, as these will react with either of the two alkylaluminums. Both aluminum compounds are highly pyrophoric and will also react with any acidic hydrogen.[2]

To date there is only one producer of tetraalkyltin compounds, or derivatives of these, via the alkylaluminum route, Shering AG in Germany. Shering has expanded their facilities in the last few years, not only for the butyltins but also for octyltins, and exported considerable quantities to the United States. At the present time, Shering does not manufacture organotin heat stabilizers, only the intermediates. It is common knowledge in the organotin industry that Shering is presently exploring plans to either purchase or develop a manufacturing facility in the U.S.

ALTERNATIVE FINAL USE PRODUCTS

From recent review articles in trade publications related to the plastics industry, PVC, and heat stabilizers (e.g., Modern Plastics, Popular Plastics, Plastics Technology, Plastics Engineering, etc.), it is apparent that much of the current emphasis in the heat stabilizer area is directed towards finding replacement materials for the heavy metal stabilizers, particularly cadmium, with relatively little thought to the organotin compounds. Thus most of the new products are directed more towards the flexible PVC applications rather than to the rigid applications.

For alternative stabilizers in PVC applications intended to contact food, Ca-Zn type stabilizers have FDA approval, as must all materials to be used in this area. Ca-Zn stabilizer systems generally are calcium and zinc salts of fatty acids, which require high epoxy and high phosphite content. These stabilizer systems are currently priced in the range of $1.25 to $1.28/lb[4] but require higher resin loadings than organotin compounds to provide the same amount of heat stability. Argus Chemical Corporation has an organophosphite chelating agent (Mark 1500) for use in conjunction with the nontoxic Ca-Zn systems in rigid PVC. This additive, priced at $1.17 to $1.20/lb, provides better clarity and improved processing conditions but is not suitable for rigid PVC applications outside of FDA approval areas.[4]

In Europe, nonmetallic organic compounds have been used in conjunction with calcium stearate for many years as heat stabilizers for PVC, especially those intended to contact food. Two of these materials are currently being marketed in the U.S. by Mobay Chemical Corporation as heat stabilizers C and I-FF (1097).[5] Stabilizer C is diphenylthiourea and can find usage in both rigid and plasticized PVC compounds. It has FDA sanction for additions up to 0.5 phr and is priced at $1.22 to $1.26/lb depending upon quantity purchased. Stabilizer I-FF (1097) is 2-phenylindone and is used in unplasticized emulsion-polymerized PVC formulations at a level of 0.5 to 1.0 phr in blow-molded-bottles. Its use in PVC intended to contact food has been approved in several European countries but no FDA approval has been obtained in the U.S. Stabilizer I-FF (1097) is a flammable liquid, which would necessitate careful handling in areas near high temperature sources. It is currently priced at $1.77/lb in quantities greater than 1,650 lb.[5]

For clear rigid nonfood applications in homo- and copolymers, there are virtually no nontin materials that can withstand the rigorous processing conditions and still produce an acceptable end product. Only one nontin containing material has been recently introduced which may be an alternative heat stabilizer. Synthetic Products Company has recently introduced antimony-tris(isooctylmercaptoacetate) to be used in combination with calcium stearate to achieve maximum stabilizing potential.[6] The combination is directed primarily at

the PVC pipe and conduit market; as of this time, NSF approval has not been obtained for this combination in potable water pipe. The antimony compound is currently priced from $1.39 to $1.69/lb depending upon which type of material is desired.

New tin-containing materials have been introduced to compete with the established materials but the antimony compound is the only nontin-containing material. Among the newer tin-containing materials, Cincinnati Milacron Chemicals Inc., has recently introduced TM-692 and TM-585. TM-692 is a methyltin alkylmercaptoethanoate, containing alkyl groups in the C_{12} to C_{18} range, and is priced at $1.66/lb. Other new tin-containing compounds or mixtures could be cited but they would only constitute substitutions for current materials, not alternatives.

REFERENCES TO SECTION X

1. Kali-Chemie Aktiengesellschaft, Brit. patent 802,796, October 8, 1958.
2. Mr. George Miller, Stauffer Chemical Company, Westport, Connecticutt.
3. "Chemical Marketing Reporter," 11/24/75 and 11/17/75 issues.
4. Argus Chemical Corporation, Chicago, Illinois sales office.
5. Mobay Chemical Corporation, Chicago, Illinois sales office.
6. Plastics Engineering, p. 24, September 1975.