EPA-520/5-76-014

RADIATION DOSE ESTIMATES TO PHOSPHATE INDUSTRY PERSONNEL

ENVIRONMENTAL PROTECTION AGENCY
Office of Radiation Programs

EPA-520/5-76-014

RADIATION DOSE ESTIMATES TO PHOSPHATE INDUSTRY PERSONNEL

Sam Windham

Jennings Partridge

Thomas Horton

Eastern Environmental Radiation Facility

P. O. Box 3009

Montgomery, Alabama 36109

December 1976

U. S. ENVIRONMENTAL PROTECTION AGENCY

Office of Radiation Programs

Waterside Mall East

401 M Street, S. W.

Washington, DC 20460

FOREWORD

The Office of Radiation Programs carries out a national program designed to evaluate the exposure of man to ionizing and nonionizing radiation, and to promote the development of controls necessary to protect the public health and safety and assure environmental quality.

Technical reports allow comprehensive and rapid publishing of the results of Office of Radiation Programs' intramural and contract projects. The reports are distributed to State and local radiological health offices, Office of Radiation Programs' technical and advisory committees, universities, laboratories, schools, the press, and other interested groups and individuals. These reports are also included in the collections of the Library of Congress and the National Technical Information Service.

I encourage readers of these reports to inform the Office of Radiation Programs of any omissions or errors. Your additional comments or requests for further information are also solicited.

W. D. Rowe, Ph.D.
Deputy Assistant Administrator
for Radiation Programs

PREFACE

The Eastern Environmental Radiation Facility (EERF) participates in the identification of solutions to problem areas as defined by the Office of Radiation Programs. The Facility provides analytical capability for evaluation and assessment of radiation sources through environmental studies and surveillance and analysis. The EERF provides technical assistance to the State and local health departments in their radiological health programs and provides special analytical support for Environmental Protection Agency Regional Offices and other federal government agencies as requested.

This study is one of several current projects which the EERF is conducting to assess environmental radiation contributions from the phosphate industry.

Charles R. Porter
Director
Eastern Environmental Radiation Facility

CONTENTS

	Page
FOREWORD	i
PREFACE	ii
LIST OF TABLES AND FIGURES	iii
ABSTRACT	iv
INTRODUCTION	1
GENERAL PHOSPHATE INDUSTRY AND OCCUPATION DESCRIPTIONS	1
RADIATION DOSE GUIDELINES	7
EXTERNAL RADIATION EXPOSURE	9
AIRBORNE RADIATION EXPOSURES	15
SUMMARY AND PROJECTED IMPACT	22
CONCLUSIONS	25
REFERENCES	27

TABLES

1. TLD measurements 13
2. PIC and scintillator measurements 14
3. Maximum external gamma doses 16
4. Comparison of MPC's for models used 19
5. Calculated lung doses, wet process plants 20
6. Calculated lung doses, thermal process plants 21
7. Summary of airborne and direct radiation doses, wet process plants 23
8. Summary of airborne and direct radiation doses, thermal process plants 24

FIGURES

1. Naturally occurring radionuclides and their daughters 2
2. Mining and benefication 3
3. Wet process phosphoric acid plant 6
4. Thermal process elemental phosphorus plant 8

ABSTRACT

Phosphate deposits throughout the world contain uranium and thorium as a natural constituent of the ore. Mining and processing of these ores redistributes much of this radioactive material among the various products, by-products, and wastes. To determine the radiological impact of the phosphate industry, the EPA Office of Radiation Programs has been conducting an extensive study of the redistribution of this radioactivity. One task of this overall study was to evaluate the radiation exposure to phosphate industry workers. This report describes the efforts undertaken to measure the personnel exposures, describes the exposures encountered, and relates these findings to existing federal guides regarding personnel exposures.

In determining the radiation dose equivalent received by phosphate industry workers only two pathways were felt to be potentially significant, the external radiation exposure from gamma radiation, and the dose received due to inhalation of airborne radionuclides.

External gamma exposures to personnel were measured using thermoluminescent dosimeters, pressurized ionization chambers, and portable scintillation type survey instruments. High Volume air samplers were used to collect airborne particulates on paper filters. These filters were analyzed to determine concentrations of airborne particulates which were subsequently used to compute potential radiation dose equivalents.

All measured direct gamma exposures were below the recommended guideline of 0.5 rem per year for individual members of the general population. All estimates of lung doses were below the current guidance for radiation workers, and in most cases are below the 1.5 rem per year guidance for an individual member of the general population. This study was based on data collected at several facilities located in Florida and North Carolina and may not be completely applicable to other parts of the country.

URANIUM - 238 DECAY SERIES

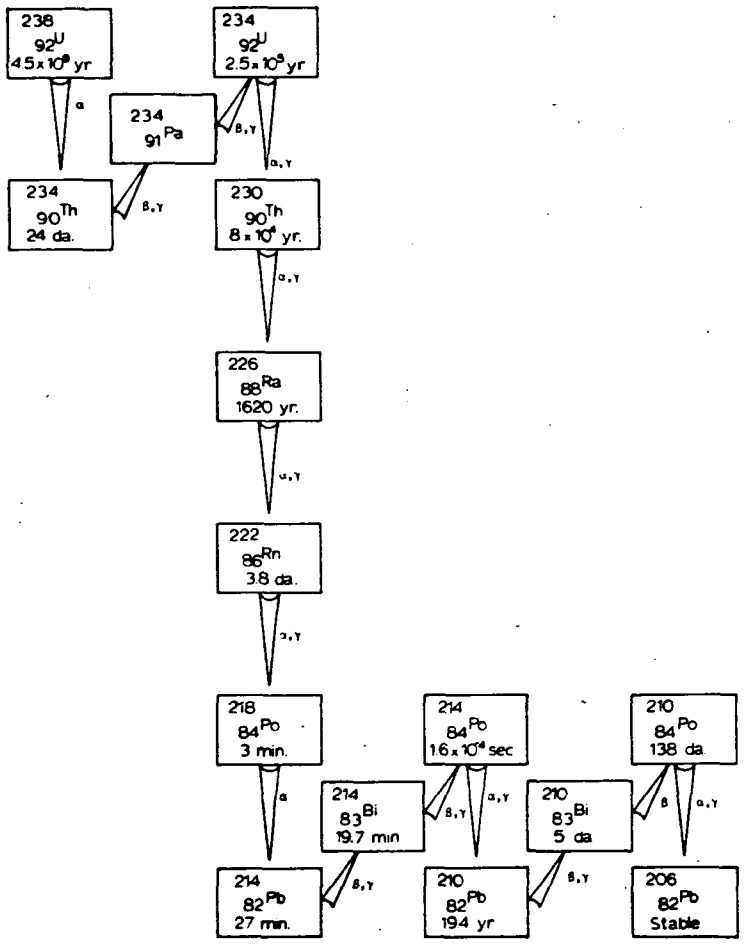

THORIUM - 232 DECAY SERIES

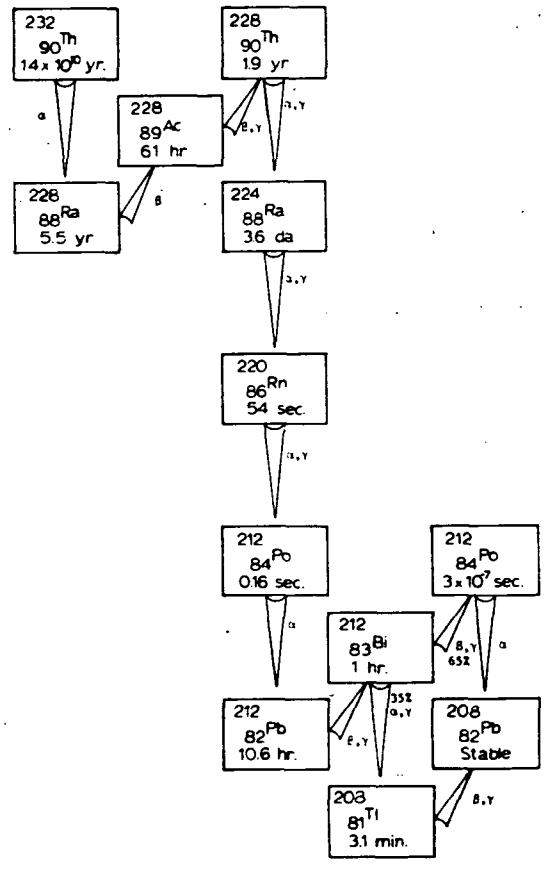

Figure 1. Naturally occurring radionuclides and their daughters.

I. Introduction

Phosphate deposits throughout the world contain uranium and thorium as a natural constituent of the ore. The phosphate ores mined in the United States contain up to 300 ppm of uranium and 19 ppm of thorium. When these naturally occurring radionuclides and their radioactive daughters (see figure 1) are underground and covered by overburden, they present no important impact on the biosphere except for that which might arise from leaching into ground waters. However, mining and processing of the phosphate deposits removes this protective overburden and offers the opportunity for redistributing the radioactivity. Dispersal of these materials throughout the environment could increase radiation exposure to the public from these naturally occurring radionuclides.

To determine the radiological impact of the phosphate mining and milling industry, the EPA Office of Radiation Programs has been conducting an extensive study of the redistribution of this radioactivity. One task of this overall study was to evaluate the radiation exposure to phosphate industry workers. Although the potential exists for workers in this industry to be occupationally exposed to radiation, they have not been considered radiation workers in the context of existing regulations. Therefore, the exposures to these workers have not been routinely controlled or monitored.

This report describes the efforts undertaken to measure the personnel exposures, describes the exposures encountered, and relates these findings to existing federal guides regarding personnel exposures.

II. General Phosphate Industry and Occupation Descriptions

This study of phosphate industry personnel exposures is based entirely on data collected at several operations located in Florida and North Carolina. Since mining and processing in these locations is different from those in other parts of the country, the conclusions for this study may not be completely applicable in all cases.

Mining and Benefication Operations

The mining and benefication operations as performed in Florida and North Carolina are shown graphically in figure 2. In the Florida and North Carolina phosphate field overburden

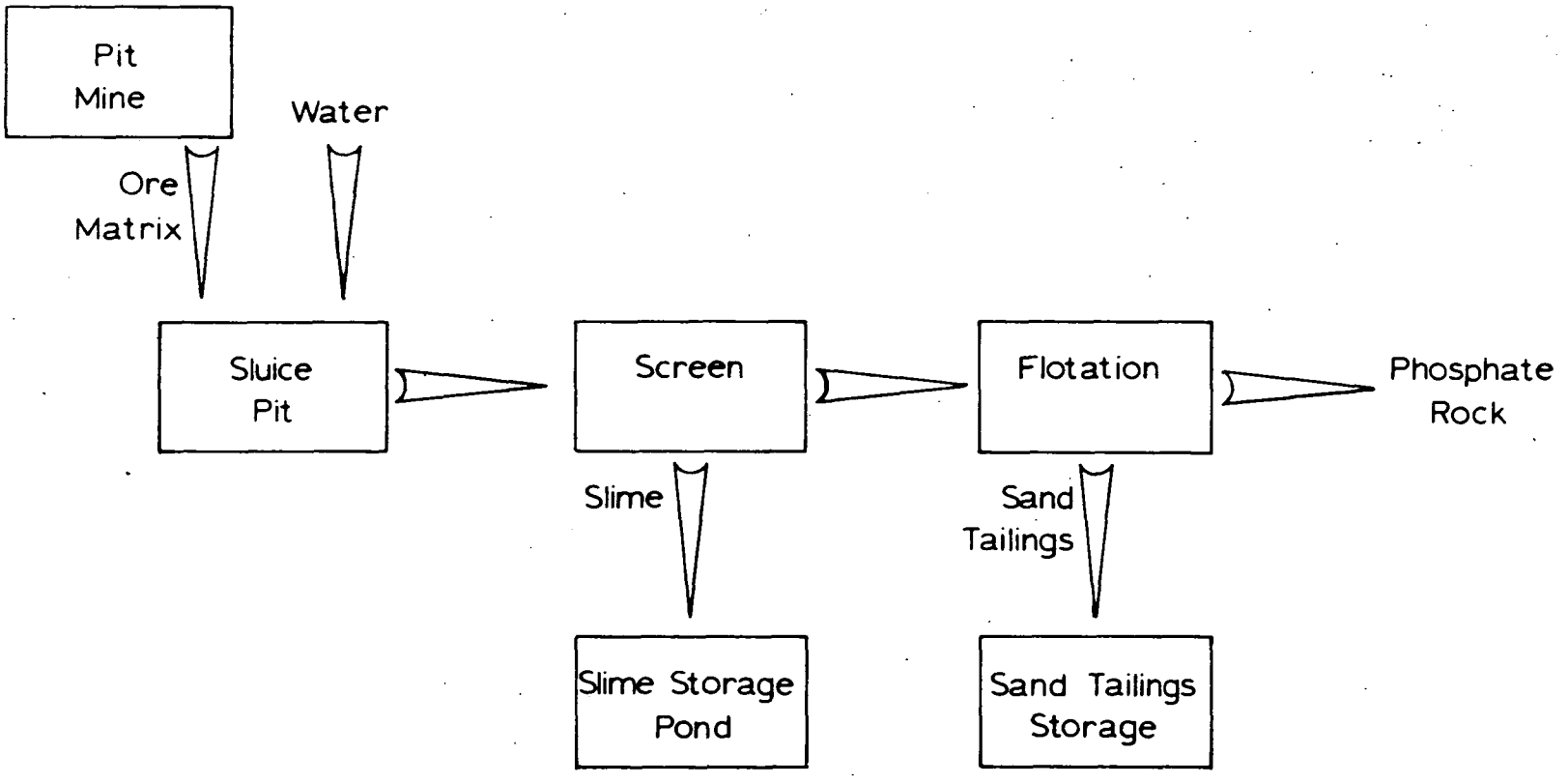

Figure 2. Mining and benefication.

is stripped from above the phosphate ore using electric draglines. The overburden varies in depths up to approximately 100 feet. These large quantities of overburden are put aside for use in land reclamation projects. The ore is removed by the same dragline and dropped into a sluice pit. In this pit, high pressure water is used to produce a slurry which is then pumped to the washer plant. The numbers of workers engaged in the actual mining operations are small; only two people are involved in the dragline operation and one person operates the water nozzles at the sluice pit. Other support people visit the mining site to provide services as required. Mining operations are normally conducted 24 hours per day, 7 days per week, on three 8-hour shifts.

In the washing and benefication process, marketable rock is separated from sand tailings and phosphatic clay slimes. This is accomplished through a series of screening and flotation steps. For each ton of marketable rock produced approximately one ton each of slime and sand tailings are produced. At the three benefication operations visited most equipment was automatically controlled, thus not requiring workers to be continuously present. As a result, most of the normal operations were controlled and monitored from a remote location. Due to the quantities of water involved, approximately 10,000 gallons per ton of marketable rock, airborne particulates were not observed to be an exposure problem in the washing and screening plants.

From the washing process the marketable rock is transferred to the drying and storage area. Here the wet rock is dried in large rotating drums. After drying the rock is separated according to size and grade and stored for later use. Most of this operation is also automated. High concentrations of particulates were present in the environs of plants which dried the beneficated rock.

Phosphate Rock Milling

Two types of plants are used to process the marketable phosphate rock. At the "wet process" plants the rock is combined with an acid, usually sulfuric, to produce phosphoric acid and waste gypsum. At "thermal process" plants the rock is combined with coke and silica and electrically smelted to produce elemental phosphorus, ferrophosphorus and slag. Plants of each type have been studied to determine radiation exposures to the personnel.

Wet Process Plants

The general operations performed at a wet process phosphoric acid plant are shown in figure 3. In the "wet process" plants studied, phosphate rock is usually received in railroad cars. The rock was dropped from car hoppers onto conveyor belts which moved the rock to temporary storage. Car vibrators or shakers were used to help dislodge rock packed in the railroad cars. This resulted in extremely heavy dust in the immediate vicinity of the unloading facility. Normally two to four employees were present at the unloading facility to operate the hopper doors, car shakers, and to move railroad cars.

From storage, the rock is ground as necessary. The crushed rock is then mixed with sulfuric acid in the reactor vessel to make phosphoric acid. After reaction, calcium sulfate (gypsum) is separated from the phosphoric acid in pan filters and pumped as a slurry to the waste gypsum pile. On the gypsum pile the process water is decanted and returned to the plant for reuse. The phosphoric acid is transferred to the fertilizer plant to be treated in a number of ways depending on the desired final product. As in the washing/benefication operations, many of the activities within the acid plant and fertilizer production facilities are automatically controlled and monitored from control rooms. Personnel are present to perform tasks which arise; however, they do not "stand over" and observe each operation continuously. In the plants studied, six to ten employees operated each acid plant during each shift. The fertilizer production operation was run by six to eight employees during each shift.

All facilities visited had granular fertilizer stored in large warehouse buildings. The product is deposited in the building via conveyor belts and from there it was outloaded as required using front-end loaders. When the product was being moved by front-end loaders the airborne particulates were visibly quite high. Loader operators in some cases were wearing nose and mouth masks to remove particulates. Normally, only three to four employees were observed working in this operation.

Heavy equipment routinely operates on top of the gypsum pile to maintain dikes and to direct the flow of

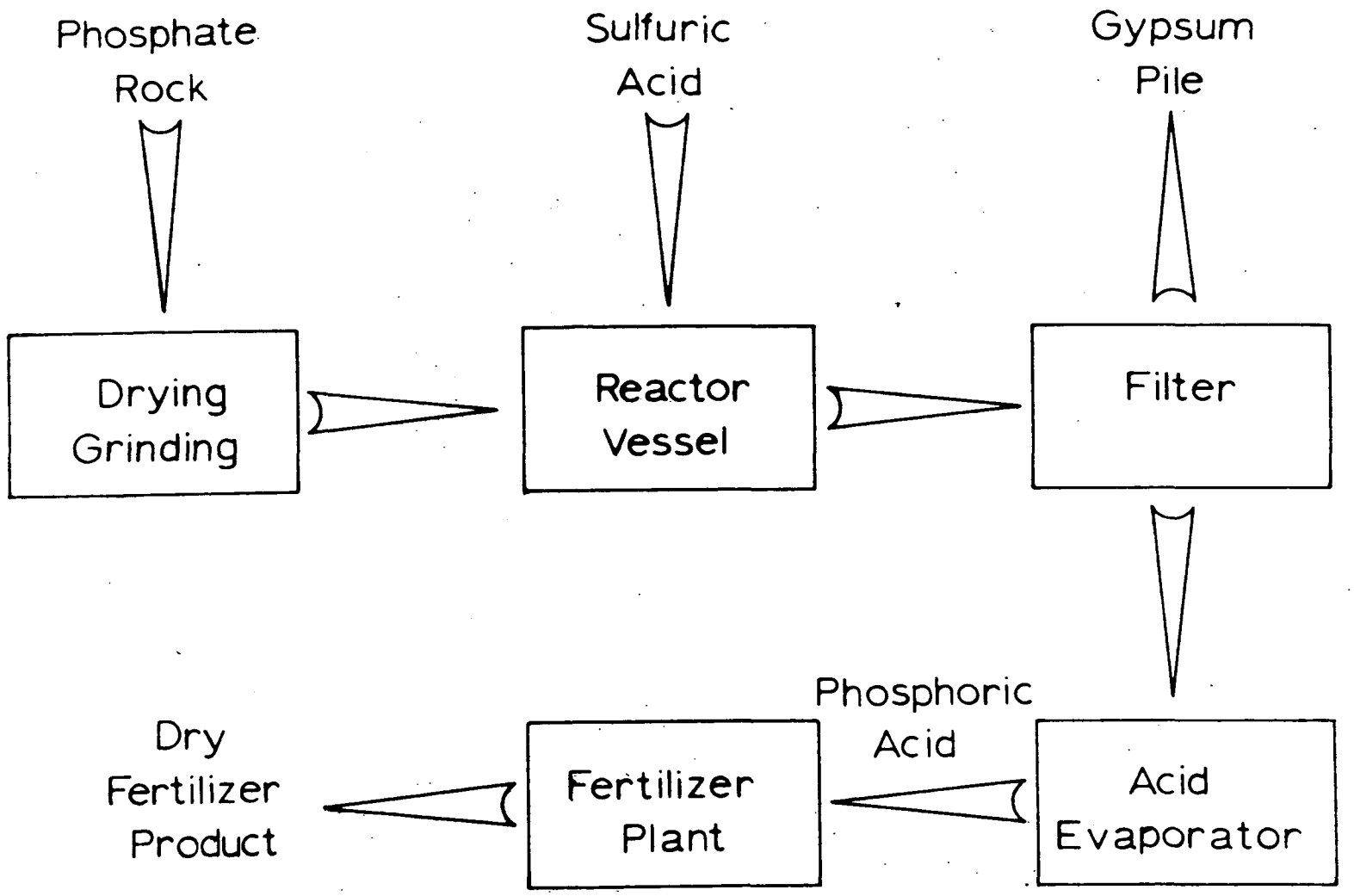
Phosphate Rock
Sulfuric Acid
Gypsum Pile
Drying Grinding
Reactor Vessel
Filter
Phosphoric Acid
Dry Fertilizer Product
Fertilizer Plant
Acid Evaporator

process water on the pile. Usually one to two people work in this location, although during major dike modifications it may require more workers.

In each facility surveyed the number of fulltime personnel directly employed by the operator was relatively small compared to the total number of persons observed to be working. Generally a total of about 200-300 employees worked at the wet process plants studied. Much of the routine maintenance and new construction is performed by contract crews. These crews were performing such tasks as painting, cleaning, and construction of new plant facilities and maintaining dikes and ponds during the times of our surveys.

Thermal Process Plants

In the "thermal process" plants surveyed, phosphate rock, coke, and siliceous material are electrically smelted in a furnace (figure 4). Elemental phosphorus is recovered by condensing vapors from the furnace. The waste products, slag, and ferrophosphorus, are tapped from the furnace in molten form.

Rock unloading at the thermal plants surveyed was similar to that observed at wet process plants. At one plant rock was also hauled in using trucks. Unloading and storage operations were usually carried out by two to three people.

Although elemental phosphorus is the principle product at these facilities, ferrophosphorus and slag are also loaded and sold for various uses. At each plant approximately 25 to 35 personnel were required to operate one furnace and supporting equipment.

III. Radiation Dose Guidelines

The Occupational Safety and Health Standards of the Department of Labor as published in Federal Register, Vol. 37, No. 202, Section 1910.96 - October, 1972, basically states that no individual in a "restricted area" should receive a radiation dose equivalent of 5 rems per year whole body or 15 rems per year to the lung. The "restricted area" is defined in the same publication as an area whose access is controlled for purposes of radiation protection.

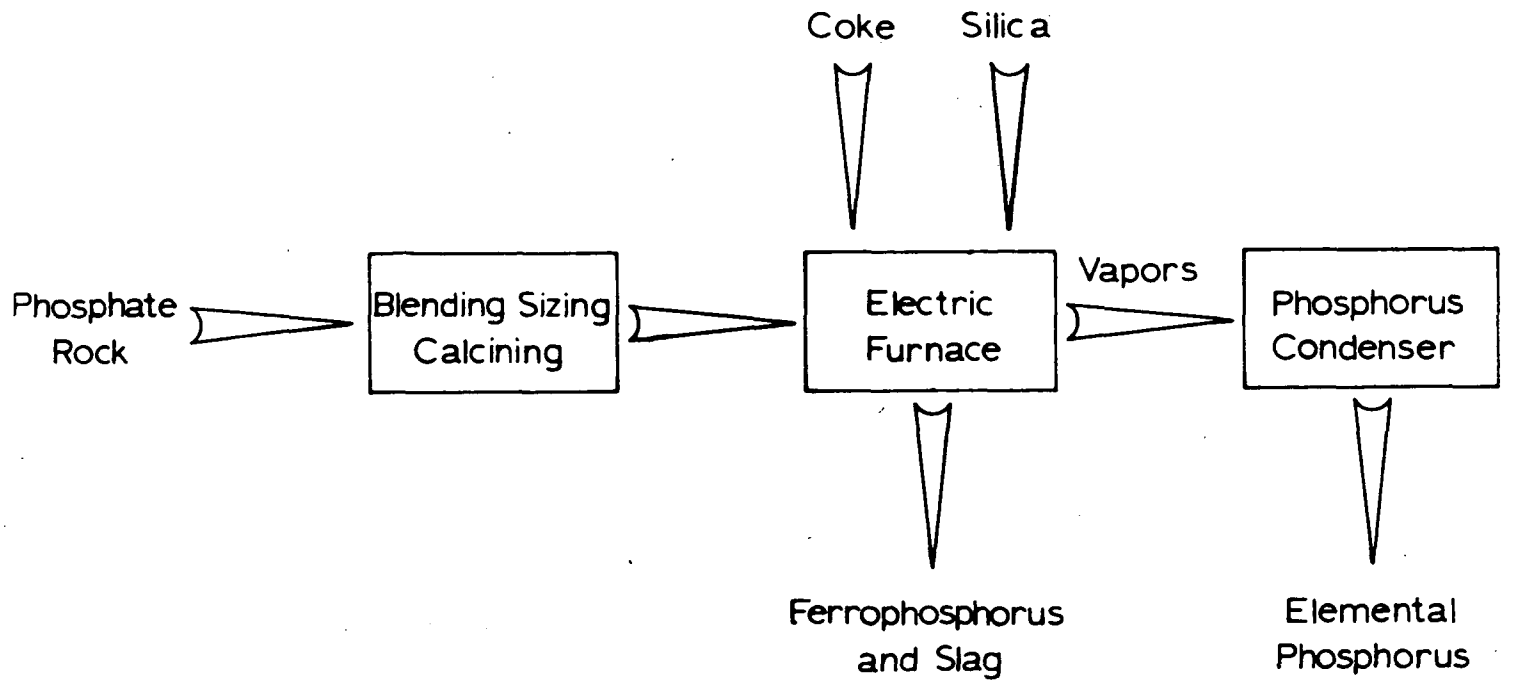

Figure 4. Thermal process elemental phosphorus plant.

The employees of the phosphate industry have generally not been working in "restricted areas" and the doses encountered were much less than those noted above. Therefore, these employees have not been considered subject to federal or state radiation protection guidance. However, for the purpose of comparison to the findings in this study the radiation protection guidance provided by the former Federal Radiation Council (FRC)[1] (now a function of the EPA Office of Radiation Programs); the National Council on Radiation Protection (NCRP)[2]; and the International Commission on Radiation Protection (ICRP)[3] serve as a guideline for evaluating the estimated doses in this study.

The general guidance provided by these three groups for an individual member of the general population (non-radiation worker) is a whole body limit of 0.5 rem per year and the annual dose equivalent limit to the lung of 1.5 rem. However, this guidance applies to all radiation doses with the exception of medical exposures and normal background exposures. Also, the general philosophy of these groups is that all radiation exposures should be kept as low as practicable.

In determining the radiation dose equivalent received by phosphate workers as a result of their occupation, only two pathways were believed to be potentially significant: (1) the external radiation exposure from gamma radiation and (2) the dose received due to the inhalation of airborne radionuclides. Therefore, the body organs of interest for this study were the whole body and the lungs.

IV. External Radiation Exposure

To determine the direct exposure to persons working in the phosphate industry, general surveys of several facilities in central Florida and North Carolina were made. A detailed survey of each facility was not attempted. However, an effort was made to survey general areas at several plants to determine the approximate exposure to persons working in these areas.

An examination of the decay series shown in figure 1 reveals a number of gamma emitters. These gamma emitters when present in sufficient quantities can result in an external radiation hazard. To determine if such an external radiation hazard exists in the phosphate industry three types of gamma radiation measuring devices were used in surveys of the facilities. The three types of measuring devices

used were: (1) thermoluminescent dosimeters (TLD); (2) pressurized ionization chambers (PIC); and (3) portable scintillation type survey instruments. The TLD's were utilized for long-term (longer than 1 month) integral exposure measurements while PIC's and scintillation meters were used for instantaneous measurements.

The TLD's used in this study were CaF_2:Mn, glass bulb type dosimeters. Previous studies have shown this type TLD to be accurate to within ± 7.5 percent at environmental exposure levels of approximately 10 μR/hr[4,5]. Additional studies have shown that results obtained with the TLD's and PIC's to be in good agreement.[6,7] The TLD's were annealed in the field near the measurement site using the electronic annealer developed at the Eastern Environmental Radiation Facility (EERF)[8]. Following the exposure period, the dosimeters were returned to EERF for readout. Corrections were made for any small exposures that were accrued during transportation to EERF.

Commercially available PIC's similar to those described by De Campo et al[9] were used in this study to measure the exposure levels in and around the various phosphate industry facilities. The detector is a stainless steel chamber, 24 cm in diameter with a wall thickness of 0.3 cm. Previous studies have demonstrated the ability of this instrument to measure environmental radiation levels of approximately 10 μR/hr with an accuracy of better than ± 5 percent[9].

The scintillation survey meter used has an internally mounted 2.5 cm x 2.5 cm NaI (Tl) gamma scintillator as the detector. This commercially available instrument has counting ranges of 0-3 μR/hr with multiples of X1, X10, X100, and X1000. This unit is portable, lightweight and convenient for making quick surveys of large areas.

All instruments were calibrated at EERF for gamma ray response using a standardized ^{226}Ra source. In addition to the EERF calibration, the scintillation survey meter was calibrated against the PIC in the field. This was done to correct the survey meter for any gamma energy response differences between the ^{226}Ra spectrum and natural background spectra.

TLD Measurements

The results of the TLD measurements are shown in table 1. These results represent two monitoring periods, one of

4-months duration and the other of 2-months duration. Each value shown is the mean of at least two dosimeters positioned at each site. The exposure levels measured at sites 1, 2, and 3 represent the typical undisturbed natural background exposure levels for this region of Florida.

Measurements at sites 4 and 5 were in the parking lot and grounds surrounding the general office areas of two plants. Site number 4 was near a road and this exposure might be due in part to the use of radioactive phosphate slag in paving material.

Sites 6 through 9 can generally be classified as the ore unloading areas where large quantities of phosphate ore are unloaded from railroad cars or large trucks. Earlier studies[10] have shown this ore to contain approximately 40 pCi/g of ^{226}Ra.

The ball mill area, site number 10, is where the ore is crushed into smaller sizes to be used in later plant operations. Measurements were made near the area where ore is fed into the ball mill. This measurement location was adjacent to the control room for this operation where personnel are working much of the time.

The phosphoric acid production facility is where the phosphate rock is reacted with acid. Site number 11 was located near the top of one of the large reactor vessels. As a result of reacting the ore with acid, two products, phosphoric acid and gypsum, are produced. Layers of the gypsum are deposited on the inner surfaces of the reactor vessel and associated components. This deposited material or "scale" was analyzed and found to contain 210 pCi/g of ^{226}Ra.

Site number 12 was located in the fertilizer production building. This is the area where dry fertilizer products are produced. Most of the processing takes place inside large containers and these containers serve as shields which reduce the external gamma exposure rates.

Sites 13 and 14 were located in the areas where the finished fertilizer products, diammonium phosphate (DAP) and triple super phosphate (TSP), were stored. Several tons of these materials were stored at these facilities.

Previous studies[10] have shown these products to contain ^{226}Ra as high as 20 pCi/g.

Site number 15 was located adjacent to the base of the furnace in the thermal process plant. The measured exposure rate of 65 μR/hr was due primarily to the ^{226}Ra and daughter products found in the slag which contained 20-60 pCi/g of radium.

Site number 16 was located at an ore drying facility where the wet ore was dried, sized, graded, and stored for later use. The TLD was located on an exterior office wall near several large piles of rock.

PIC and Scintillation Measurements

The exposure rate measurements shown in table 2 were made using a PIC and/or the portable scintillation survey meter. These results are averages of several measurements at different facilities. All measurements were made during "walk through" surveys at the various plants. It should be noted that these are only measurements at one particular time and do not represent integrated exposures over long periods of time as do the TLD measurements. As a result of being instantaneous measurements, they are a function of the quantity of material on hand at that particular time. However, there is no reason to believe that our survey wasn't performed at a typical time and these results should be representative of the normal operations. In most cases PIC and scintillation measurements were not made simultaneously.

These results show exposure rates similar to those measured by the TLD's. The highest exposure levels were recorded in the areas associated with the ore handling/storage facilities and the phosphoric acid facilities.

Of particular interest were the exposure levels inside the reactor vessel during cleanout (500 μR/hr). This process varies from plant to plant, but at two of the facilities surveyed, each of the two reactors in the phosphoric acid plants were cleaned out four to eight times per year, based on quantity of scale buildup. Each cleanout operation reportedly lasts from 5 to 7 days and involved 20 to 40 employees.

Measurements were taken on top of the gypsum piles at each wet process facility surveyed. The exposure rates were fairly uniform across the top of the piles. Earlier studies have shown the gypsum to contain ~ 30 pCi/g of ^{226}Ra[10].

Table 1

TLD measurements

	Location	Average Exposure μR/hr
(1)	Dundee, FL - Background	4
(2)	Lake Wales, FL - Background	6
(3)	Polk City, FL - Background	4
(4)	Grounds - general office	14
(5)	Parking lot - general office	6
(6)	Ore unloading	19
(7)	Ore unloading	38
(8)	Ore unloading	54
(9)	Ore unloading	39
(10)	Ball mill area	37
(11)	Phosphoric Acid Plant	179
(12)	Fertilizer Plant	7
(13)	Fertilizer Product Storage	16
(14)	Fertilizer Product Storage	16
(15)	Furnace Area - Thermal Process Plant	65
(16)	Ore Drying and Storage	57

Table 2

PIC and scintillator measurements

Area of Measurement	PIC μR/hr	Scintillator μR/hr
Washing and Benefication Facility	No data	52
Ore Drying and Storage	90	105
Ore Unloading	100	115
Ball Mill Area	19	22
Phosphoric Acid Plant		
General area around reactor	132	85
Inside reactor during cleanout	No data	500
Fertilizer Building	10	10
Product Storage Area		
Dry Fertilizer Products	12	15
Slag and Ferrophosphorus	No data	150
Top of Gypsum Pile	No data	30
General area around thermal process plants	No data	75

The general area around two thermal process plants was surveyed and exposure rates of approximately 50-150 μR/hr were observed. It was noted that these grounds at both facilities were covered with slag which typically contains about 50 pCi/g of ^{226}Ra.

To determine a maximum yearly dose to individuals in different areas of the plants the results of survey measurements shown in tables 1 and 2 were taken as typical exposure levels. Since the TLD results were integral exposures over a longer period of time, these results were used where available. The PIC and scintillator measurements were only used for those locations where no TLD measurements were made. In locations where more than one TLD result was available the exposures were averaged. The exposure rates for the respective areas were then multiplied by 40 hours per week and 50 weeks per year to determine the maximum yearly exposure. This yearly exposure is approximately equal to the yearly dose equivalent. By assuming continuous occupancy during work periods the doses to the personnel are overestimated. The actual dose could be estimated more precisely by inserting the actual occupancy factor for a particular location.

Annual dose equivalent values are given in table 3. The calculated dose inside the reactor vessel assumes a person to be involved in eight cleanout operations per year, each lasting 40 hours. This estimate assumes the typical plant has two reactors, each being cleaned four times per year.

V. Airborne Radiation Exposures

To compute potential doses due to airborne radioactive particulates, radioisotopic air concentrations were needed. These concentrations were obtained by collecting the particulates on paper filters which were analyzed. Most of the filter samples were obtained by using high volume samplers with a flow rate of 40 to 50 cubic feet per minute (cfm). Some additional data was generated by running samplers which separate the particulates based on size. Two types of particle sizing samplers were utilized: (1) High volume Cascade Impactor with five fractional stages plus a backup stage and (2) a Hi-Vol fractionating sampler with four fractional stages plus a backup filter. Both samplers were run at a flow rate of 20 cfm. All filters were analyzed in the laboratory for ^{226}Ra and the isotopes of uranium and thorium. Additionally, a number of samples were analyzed for ^{210}Po.

Table 3

Maximum external gamma doses

Area of Plant	Dose Equivalent Rate rem/yr
Wet Process	
Ore Drying and Storage Area	.12
Ore Unloading Area	.06
Ball Mill Area	.07
Phosphoric Acid Building	.04
Fertilizer Production Building	.01
Product Storage and Shipment Area	.03
Top of Gypsum Pile	.06*
Inside Reactor (during cleanout)	.16*
Thermal Process	
Ore Unloading Area	.11
Furnace Area	.13
Ferrophosphorus and Slag Storage Area	.30*
General Plant Area	.10*

* Based on PIC or Scintillation survey meter measurements.

Ambient air samples were collected at some locations and analyzed for ^{222}Rn, a radioactive gas. The samples were collected by drawing filtered air into an evacuated scintillation counting cell (125 cc volume) which was counted directly on a photomultiplier tube. Radon concentrations were calculated based on the number of scintillations recorded by the counter.

Estimates of working level based on radon progeny concentrations were not made during this study due to lack of equipment available. Because of the "open air" nature of most of the areas in the plants there is little opportunity for the buildup of radon progeny. However, certain locations such as control rooms, offices, tunnels, etc., do exist where buildup may occur and we plan to survey these areas on future visits to the facilities.

Several different methods can be used to calculate potential lung doses due to inhalation of radioactive particulates of uranium, thorium, and radium and radon gas and its daughters. One method is to use the International Commission on Radiation Protection Report Number 2 (ICRP-2)[3] recommendations for calculating occupational lung doses. ICRP-2 includes maximum permissible concentrations (MPC's) based on a simplified lung model where aerosol particle size is ignored and solubility is lumped into the broad categories of being soluble or insoluble.

Another calculational method is to utilize the dose conversion factors recommended by the Environmental Protection Agency in the Environmental Analysis of the Uranium Fuel Cycle Part 1 - Fuel Supply[11]. This model takes the recommendations of the ICRP Task Force[12] report and assumes an aerosol particle size of 1μ AMAD (activity median aerodynamic diameter). Furthermore, the EPA model assumes the radionuclides are retained in the lung with a 500 day effective half-life (Class Y - insoluble)[13,14] and the lung mass is 480 grams[15]. Originally, a 1000 day effective half-life was chosen[11]; therefore, the dose conversion factors in reference 10 are reduced by a factor of two to account for the reduction in the effective half-life. The Class Y assumption may be valid for certain chemical forms of uranium, thorium, and uranium daughters but may not necessarily be true for radionuclides found in the phosphate industry. The EPA model, therefore, predicts an upper limit of potential exposure for insoluble particles.

By applying both the ICRP-2 and the EPA models, a range of potential lung doses to workers in the phosphate industry was obtained. Table 4 lists the radionuclides considered in each model along with the applicable MPC's for the radionuclides. Dose contributions from ^{210}Po and ^{222}Rn were calculated and included only where noted. Even though the EPA model does not include doses from ^{210}Po and thorium (except ^{230}Th), it is expected that the dose fractions for these radionuclides would be small compared to the total dose estimates. The MPC for radon used in the EPA model is an average[16] value which assumes a ventilation rate of one air change per hour. Because of the nature of the phosphate plants, it could not be determined if this is a realistic estimate of the ventilation rate. Both the ICRP-2 and EPA models tend to overestimate the lung dose due to radon and its daughters since the MPC's in table 4 are for "ordinary air" and "clean air", respectively.

Potential lung doses for the phosphate industry personnel working in certain areas of the plants are listed in tables 5 and 6. These dose estimates are based on an assumed occupancy factor of 40 hours per week, 50 weeks per year. It is realized that in many cases the actual occupancy in these areas is much lower. In one location noted in table 5, it is not possible to remain in the location for extended periods. The "inside reactor during cleaning" location for wet process plants can only be considered for periods during the cleaning operation. This occurs four to eight times per year in each of the two reactors at two of the plants surveyed. The doses given for the cleanout operations have been reduced by 8/50th of the annual dose to reflect this occupancy factor.

It is interesting to note the difference in potential doses measured in the product storage and shipment areas A and B in table 5. In the storage and shipment area A (average of several plants) loading operations were taking place. Front-end loaders were being used to remove fertilizer products from the buildings. This resulted in high concentrations of airborne particulates and correspondingly higher lung doses. In contrast, no loading operations were taking place in the "B" locations and the airborne particulates and calculated lung doses were considerably reduced.

The potential lung doses calculated for the top of the gypsum pile are based on radon plus daughter concentrations only. The EPA model assumes 50 percent daughter equilibrium. Since this is an "open air" location, this percent equilibrium

Table 4

Comparison of MPC's[a] for models used

Radionuclide	ICRP-2 pCi/m³	EPA pCi/m³
^{210}Po	200	-
^{222}Rn	30,000	11,000
^{226}Ra	50[b]	8
^{227}Th	200	-
^{228}Th	6	-
^{230}Th	10	8
^{232}Th	10	-
^{234}U	100	9
^{235}U	100	9
^{238}U	100	9

[a] Occupational, 40 hours a week, lung (insoluble).

[b] NBS Handbook 69.

Table 5

Calculated lung doses, wet process plants
(40 hr/wk, 50 wk/yr)

Location	ICRP-2 rem/yr[a]		EPA rem/yr[a]	
Ore Unloading Area	1.6	(.53-3.6)	5.5	(1.8-9)
Dryer Area	.30	(.11- .66)	1.0	(.33-2.2)
Ball Mill Area	1.1	(.94-1.4)	3.6	(3-4.7)
Fertilizer Production Building	.90[b]	(.32-2.1)	2.5	(.85-6)
Product Storage and Shipment Area A	1.0	(.16-1.9)	3.2	(.47-5.5)
Product Storage and Shipment Area B	.05	(.02- .09)	.15	(.06-.27)
Top of Gypsum Pile (radon plus daughters only)	3.0		1.0[c]	
Inside Reactor during Cleanout	.24[d]	(.24- .25)	.70[e]	(.66-.74)

[a] Average of two or more samples with the range of values in parentheses.

[b] Includes .011 rem for ^{210}Po.

[c] Assumes 3 minute buildup of radon daughters with pure radon initially.[17]

[d] Includes .24 rem for radon and its daughters - assumes 8/50th of a year occupancy.

[e] Includes .66 rem for radon and its daughters - assumes 8/50th of a year occupancy.

Table 6

Calculated lung doses,
thermal process plant
(40 hr/wk, 50 hr/wk)

Location	ICRP-2 rem/yr	EPA rem/yr
Ore Unloading Area	2.3	6.0 (5.5-6.5)*
Beneath Ore Storage Bins	.09	.28
Furnace Area	.27	.85

* Average of two or more samples with the range of values in parentheses.

probably would not often be reached and thus the dose contributed by the daughters would be correspondingly reduced; therefore, a more realistic estimate was made corresponding to an approximate 6 percent daughter equilibrium.[17] Particulates at this location were not measured due to the unavailability of power to operate air samplers.

In general, good agreement was seen between doses calculated for the same operation at different plants. Potential lung doses calculated were seen to be in direct proportion to airborne particulates in a given area. Particle sizing of a number of these samples showed that the majority of particulates were greater than 1μ AMAD. Because of this, the doses estimated using the EPA model are probably high since a 1μ AMAD was assumed.

VI. Summary and Projected Impact

Tables 7 and 8 are summaries of the airborne and direct doses calculated for wet and thermal process plants. The doses and numbers of workers presented are typical for the plants surveyed during the study. They are not intended to describe any one plant. In each table the dose equivalent to the lung from airborne particulates is greater than the dose equivalent to the whole body from direct gamma exposure. In all locations the annual whole body dose is less than the applicable guidelines of 0.5 rem/yr.

Airborne lung doses calculated for some locations noted in tables 7 and 8 are greater than the recommended guidance of 1.5 rem per year to the lungs for an individual in the general population but less than the limit of 15 rem/yr to the lung for radiation workers.

The EPA model prediction of lung dose due to particulates could be overestimated by a factor of 4 to 5 due to assumptions made regarding lung mass and particle size as discussed previously. Other factors which could reduce the actual doses below the predicted or calculated doses include:

1. Lower than predicted occupancy at the location

2. Non-respirable characteristics of larger particles

3. Use of protective breathing devices

The extent to which these factors would reduce the actual doses is difficult to estimate based on the limited observations of our study. These factors would vary

Table 7

Summary of airborne and direct radiation doses, wet process plants (assuming 40 hr/wk, 50 wks/yr)

Location	Airborne dose equivalent rem/yr		Direct gamma dose equivalent rem/yr
	ICRP-2	EPA	
Ore Unloading Area	1.6	5.5	.06
Ball Mill Area	1.0	3.6	.07
Fertilizer Production Building	0.9	2.5	.01
Product Storage and Shipment Area	1.0	3.2	.03
Top of Gypsum Pile (radon plus daughters only)	3.0	1.0	.06
Inside Reactor during Cleanout (radon plus daughters included)*	0.2	.70	.16

* The reactor vessel is normally cleaned 4-8 times per year by 20-40 personnel, each cleaning lasts approximately 5-7 days. The doses given are based on occupancy in the vessel for eight cleanouts each lasting 40 hours during the year.

Table 8

Summary of airborne and direct radiation doses, thermal process plants (assuming 40 hr/wk, 50 wks/yr)

Location	Airborne dose equivalent rem/yr		Direct gamma dose equivalent rem/yr
	ICRP-2	EPA	
Ore Unloading Area	2.3	6.0	.11
Beneath Ore Storage Bins	0.1	0.3	No data
Furnace Area	0.3	0.9	.13
Ferrophosphorus and Slag Storage Area	No data	No data	.30
General Plant Area	No data	No data	.10

considerably from plant to plant and even within a single plant depending on an individual worker's habits.

In addition to the dose ranges for individuals, it is necessary to estimate the total number of personnel working in the various locations to determine the overall radiological impact on phosphate industry workers. This is difficult due to differences between the plants and the general lack of employment records for the industry. Estimates on numbers of workers in this report are based on observations made at plants in Florida and North Carolina. Records indicate that there are now 35 wet process and 10 thermal process plants in operation in the United States.

Generally three categories of employees were observed in the plants surveyed. One category was comprised of part-time personnel who performed maintenance and construction work on the plant facilities. These personnel were not employed directly by the phosphate plant, but by a contractor hired to perform some specific task. A second category was comprised of employees of the plant who do not routinely work in the areas listed in tables 7 and 8. This group includes office and clerical help, laboratory workers, maintenance workers, etc. The third category of plant employees consists of the personnel who routinely work in the areas listed in tables 7 and 8.

Extrapolation to the total industry from the plants surveyed indicate there would be approximately 8000 total plant employees in wet process plants, 2500 to 3500 of which routinely work in the areas listed in table 7. The thermal process plants employ a total of approximately 3000 employees with 400 to 700 routinely working in the areas listed in table 8. The above estimates do not include the part-time (contract) maintenance and construction crews.

VII. Conclusions

The following general conclusions can be drawn from the study described:

1. All measured direct gamma exposures, even assuming continuous occupancy, are below the current Radiation Protection Guides of 0.5 rem per year for individual members of the general population.

2. All estimates of lung doses are well below the current occupational guidance for workers of 15 rems per year and in most cases are below 1/10 of the guide.

3. In accordance with the additional Federal Guidance that "every effort should be made to encourage the maintenance of radiation doses as far below the (RPG's) as practicable," the following suggestions to reduce exposure warrant some consideration:

a. Reduction of dust concentrations in the work place or by the use of protective respirators (non-radiological health benefits would also be gained), and

b. In new facilities, minimizing personnel exposures by design and location of control rooms and other routinely occupied work areas.

4. Additional data relative to particle size distributions, particle solubility, and occupancy factors could be useful in more clearly defining the radiological impact of the phosphate industry.

5. If specific situations exist at a facility that could result in annual whole body exposures in excess of 1.25 rem it would be necessary to provide personnel monitoring devices for the workers exposed. This would be in accordance with the present OSHA regulations.

REFERENCES

1. FEDERAL RADIATION COUNCIL. Background Material for the Development of Radiation Protection Standards, FRC Report No. 1, DHEW, PHS, Washington, DC (May 1960).

2. NATIONAL COUNCIL ON RADIATION PROTECTION AND MEASUREMENTS (NCRP). Basic Radiation Protection Criteria, NCRP - Report No. 39, NCRP Publications, Washington, DC (January 1971).

3. INTERNATIONAL COMMISSION ON RADIOLOGICAL PROTECTION. Report of Committee II on Permissible Dose for Internal Radiation, ICRP Publication 2, Pergamon Press, New York (1959).

4. PARTRIDGE, J. E., S. T. WINDHAM, J. L. LOBDELL, and J. A. OPPOLD. Suitability of Glass-Encapsulated CaF_2:Mn TLD's for Environmental Radiation Surveillance, ORP/EERF-73-1 (June 1973).

5. BURKE, Gail de P. Investigation of a CaF_2:Mn TLD System for Environmental Monitoring, HASL-252 (April 1972).

6. PARTRIDGE, J. E., J. C. LOCHAMY, J. C. EAKINS, and S. T. WINDHAM. A Comparison of CaF_2:Mn and LiF TLD's for Environmental Radiation Surveillance, EPA 520/5-73-006.

7. PARTRIDGE, J. E., J. A. BROADWAY, S. T. WINDHAM, and C. R. PHILLIPS. Low Level Population Exposure Measurements Using TLD's, presented at Symposium on Population Exposures CONF-741018 Proceedings of the Eighth Midyear Topical Symposium of the Health Physics Society, Knoxville, TN (October 1974).

8. WINDHAM, S. T., H. L. KELLEY, and T. K. PLANT. Portable Annealer for TLD's, ORP/EERF-73-3 (June 1973).

9. DECAMPO, J. A., H. L. BECK, and P. D. RAFT. High Pressure Argon Ionization Chamber Systems for Measurement of Environmental Radiation Exposure, HASL-260 (1972).

10. GUIMOND, R. J. and S. T. WINDHAM. Radioactivity Distribution in Phosphate Products, By-Products, Effluents and Wastes, ORP/CSD-75-3 (August 1975).

11. U. S. ENVIRONMENTAL PROTECTION AGENCY. Environmental Analysis of the Uranium Fuel Cycle Part I - Fuel Supply, EPA-520/9-73-003-B. Office of Radiation Programs, Field Operations Division, Washington, DC (October 1973).

12. MORROW, P. E. Deposition and Retention Models for Internal Dosimetry of the Human Respiratory Tract. Health Physics 12:173-207 (1966).

13. U. S. ENVIRONMENTAL PROTECTION AGENCY. Environmental Radiation Protection for Nuclear Power Operations, Supplementary Information. Proposed Standards, 40CFR190 (January 1976).

14. INTERNATIONAL COMMISSION ON RADIOLOGICAL PROTECTION. The Metabolism of Compounds of Plutonium and Other Actinides, ICRP Publication 19, Pergamon Press, New York (1972).

15. MORGAN, K. Z. and TURNER, J. E. Principles of Radiation Protection, John Wiley & Sons, Inc. (1967).

16. JOHNSON, R. H., et al. Dose Conversion Factor for Radon-222 and Daughter Products, USEPA, OAB, EAD, ORP, Washington, DC (April 1975 Draft).