EPA-600/1-77-050
October 1977

Environmental Health Effects Research Series

EVALUATION OF COLLECTION MEDIA FOR LOW LEVELS OF AIRBORNE PESTICIDES

Health Effects Research Laboratory
Office of Research and Development
U.S. Environmental Protection Agency
Research Triangle Park, North Carolina 27711

EPA-600/1-77-050
October 1977

EVALUATION OF COLLECTION MEDIA FOR LOW LEVELS OF AIRBORNE PESTICIDES

by

John W. Rhoades and Donald E. Johnson
Southwest Research Institute
8500 Culebra Road
San Antonio, Texas, 78284

Contract No. 68-02-2235

Project Officer

Robert G. Lewis
Analytical Chemistry Branch
Environmental Toxicology Division
Health Effects Research Laboratory
Research Triangle Park, N.C. 27711

U.S. ENVIRONMENTAL PROTECTION AGENCY
OFFICE OF RESEARCH AND DEVELOPMENT
HEALTH EFFECTS RESEARCH LABORATORY
RESEARCH TRIANGLE PARK, N.C. 27711

DISCLAIMER

This report has been reviewed by the Health Effects Research Laboratory, U.S. Environmental Protection Agency, and approved for publication. Approval does not signify that the contents necessarily reflect the views and policies of the U.S. Environmental Protection Agency, nor does mention of trade names or commercial products constitute endorsement or recommendation for use.

FOREWORD

The many benefits of our modern, developing, industrial society are accompanied by certain hazards. Careful assessment of the relative risk of existing and new man-made environmental hazards is necessary for the establishment of sound regulatory policy. These regulations serve to enhance the quality of our environment in order to promote the public health and welfare and the productive capacity of our Nation's population.

The Health Effects Research Laboratory, Research Triangle Park, conducts a coordinated environmental health research program in toxicology, epidemiology, and clinical studies using human volunteer subjects. These studies address problems in air pollution, non-ionizing radiation, environmental carcinogenesis and the toxicology of pesticides as well as other chemical pollutants. The Laboratory develops and revises air quality criteria documents on pollutants for which national ambient air quality standards exist or are proposed, provides the data for registration of new pesticides or proposed suspension of those already in use, conducts research on hazardous and toxic materials, and is preparing the health basis for non-ionizing radiation standards. Direct support to the regulatory function of the Agency is provided in the form of expert testimony and preparation of affidavits as well as expert advice to the Administrator to assure the adequacy of health care and surveillance of persons having suffered imminent and substantial endangerment of their health.

This report represents a research effort to extend and improve sampling methodology for the measurement of a variety of pesticides and polychlorinated biphenyls in ambient air. The emphasis is on the evaluation and optimum utilization of collection media for high volume sampling in order to obtain sufficient quantities of low level airborne pollutants for definitive analysis.

John H. Knelson, M.D.
Director,
Health Effects Research Laboratory

ABSTRACT

Polyurethane foam plugs, Chromosorb 102, and Tenax GC have all been found to be better sorbents than cottonseed oil for high volume collection of airborne chlorinated and organophosphate pesticides and polychlorinated biphenyls. None of these were satisfactory for the recovery of carbofuran or carbaryl. A new high volume collecting module concept capable of use with polyurethane foam, porous polymer beads, liquid coated glass beads, or other solids was developed. The entire collector is Soxhlet extracted and no disassembly is required. The collector-extractor is ready for reuse as soon as residual solvent is removed.

TABLE OF CONTENTS

	Page
ABSTRACT	iv
LIST OF ILLUSTRATIONS	vii
LIST OF TABLES	viii
INTRODUCTION	1
SUMMARY	3
CONCLUSIONS	4
RECOMMENDATIONS	5
EXPERIMENTAL AND RESULTS	6
A. First Year's Work with SURC Collecting Module	6
1. Basic Sampling Equipment	6
2. Test Pesticides	6
3. Generation of Pesticide Vapor	6
4. Gas Chromatographic Analysis - Chlorinated Pesticides	13
5. Recovery of Chlorinated Pesticides from Generators	13
6. Sorption Media Evaluation Procedure	14
7. Sampling	16
8. Sample Preparation	16
9. Evaluation of Liquid Sorbents - Chlorinated Pesticides	17
10. Evaluation of Solid Sorbents	18
11. Discussion of Collection Efficiency Results with SURC Sampling Module	22
B. Second Year's Work with SwRI Collecting Module	23
1. SwRI Collecting Module	23
2. Test Pesticides and Related Compounds	26
3. Pesticide Generation	28
4. Gas Chromatographic Analysis	28
5. Other Equipment Changes	29
6. Sorbents to be Evaluated	29
7. Sorbent Evaluation Procedure	30
8. Sorbent Evaluations	31
C. Field Testing	48
1. Ambient Air Sampling	48
2. Sample Preparation and Chromatography	48
3. Field Study Data	52

Table of Contents (Cont'd)

	Page
APPENDIX I Chlorinated Pesticides - Collection Efficiency Data	I-1
APPENDIX II Synthetic PCB Mixture - Collection Efficiency Data	II-1
APPENDIX III Aroclor 1016 - Collection Efficiency Data	III-1
APPENDIX IV Aroclor 1254 - Collection Efficiency Data	IV-1
APPENDIX V Organophosphate Pesticides - Collection Efficiency Data	V-1
APPENDIX VI Carbamate Pesticides - Collection Efficiency Data	VI-1
APPENDIX VII Substitute Pesticides - Collection Efficiency Data	VII-1
APPENDIX VIII Field Study Data - Computer Print-Outs	VIII-1

LIST OF ILLUSTRATIONS

Figure		Page
1.	Rate of Loss of Lindane from Small Bore Tubing Originally 1.0 μg.	10
2.	Rate of Pesticide Loss from Pipe Cleaner Originally Spiked with 1.0 μg.	11
3.	Schematic of Pesticide Generation and Collection	12
4.	Collector-Extractor	25
5.	Sampling Module	27
6.	Gas Chromatogram of Chlorinated Pesticides Standard	33
7.	Gas Chromatogram of Mixed PCB Standard	35
8.	Gas Chromatogram of Aroclor 1016	38
9.	Gas Chromatogram of Aroclor 1254	40
10.	Gas Chromatogram of Phosphates Pesticides Standard	42
11.	Gas Chromatogram of Carbamates Standard	45
12.	Gas Chromatogram of Substitute Pesticides Standard	47
13.	Gas Chromatogram of Material Collected from Ambient Air vs. Charcoal-Filtered Air	49

LIST OF TABLES

Table		Page
1.	Test Pesticides	7
2.	Percent Recovery of Pesticides from Generators	15
3.	Collection of Pesticide Vapors from Air	19
4.	Chlorinated Pesticides	32
5.	Synthetic PCB Mixture	34
6.	Aroclor 1016	36
7.	Aroclor 1254	39
8.	Phosphate Pesticides	41
9.	Carbamate Pesticides	44
10.	Substitute Pesticides	46
11.	Field Test of Tenax GC with and without Generated Pesticides	50
12.	Ambient Air Samples	51

SECTION 1

INTRODUCTION

The widespread use of pesticides over the last several years has resulted in a general contamination of the environment. The technical literature abounds with articles relative to the detection of pesticides and their metabolites in man, animals, water, soil, and air.

The vapor pressures of pesticides vary considerably but all can be vaporized into ambient air to some extent. The low levels at which pesticides could be expected in the atmosphere requires a high volume sampling system for collection of adequate quantities for analysis.

As part of the overall program for the study of airborne pesticides, a high-volume sampler was developed by Syracuse University Research Corporation (SURC) under NAPCA Contract No. CPA-70-15. Later, under EPA Contract CPA-70-145, several of these samplers were used in a field evaluation of the method of collection.

The collection media used in the SURC sampler was cottonseed oil coated on glass beads. It was found that cottonseed oil does not effectively collect some of the more volatile chlorinated pesticides. Further the use of cottonseed oil requires acetonitrile partitioning for recovery of the pesticides from the oil. Some pesticides are not effectively recovered when acetonitrile partitioning is used as part of the analytical procedure.

The main purpose of this program was to evaluate various types of collection media for the collection of chlorinated pesticides, polychlorinated biphenyls (PCB's), organophosphate pesticides, carbamate pesticides, and a few selected classes of pesticides under review by EPA's Substitute Chemicals Program. Liquid coatings and especially solid sorbents such as polyurethane foam and porous polymer beads were to be evaluated.

During the first year, the design of the SURC sampler proved to be inadequate for proper evaluation of the porous polymer beads. Simple modification of the SURC sampler resulted in test data which indicated the solid sorbents were superior to cottonseed oil but the data were not entirely satisfactory.

At the start of the second year of the contract, a new collecting module was designed and fabricated. The new collecting modules were available only in the last six months of the project, but their use made it possible to perform the required evaluations of the various solid sorbents.

SECTION 2

SUMMARY

This program was performed to evaluate new sorbents for a high-volume air sampler for monitoring pesticides, high boiling chlorinated compounds, and other toxic organics in ambient air. The program demonstrated that solid sorbents such as polyether-type polyurethane foam, Chromosorb 102, and Tenax are better sorbents than liquids such as cottonseed oil. These solid sorbents are more efficient in trapping trace organics from ambient air and the desorption and subsequent analysis is simpler and more efficient than with the liquid sorbents tested.

An improved collector-extractor and collecting module was developed which permits extraction of the collector by simply transferring the entire assembled collector to a Soxhlet extracting apparatus. The design minimizes sample contamination, provides more efficient handling of the sample and improves collection efficiencies. The collector-extractor is adaptable and will accept many types of sorbents. After extraction and residual solvent removal, the collector-extractor is ready to reuse without further special cleaning.

The new design of the high-volume sampler with several solid sorbents was field tested under different meteorological conditions. The system was shown to be capable of measuring chlorinated organics in ambient air at the ng/m^3 level.

SECTION 3

CONCLUSIONS

The use of solid sorbents for the collection of chlorinated pesticides, PCB's, and organophosphate pesticides is a great improvement over the cottonseed oil-coated glass beads. Not only is the objectionable acetonitrile partitioning step of the analytical scheme avoided, but the solid sorbents tested are more efficient sorbents than cottonseed oil. Also, the sorbent is ready for reuse as soon as the solvent used for extraction has been evaporated from the sorbent.

The basic design of the new collecting module permits the use of a variety of sorbent forms such as liquid-coated glass beads, polyurethane foam, and small particle-size porous polymer beads or other solid sorbents. Any of the above sorbents can be used in one or more of the possible designs of the glass collector-extractor.

Polyurethane foam, Chromosorb, 102, and Tenax GC were evaluated on a comparative basis, using the collecting module as described in the body of this report. All three appear to be good sorbents for most of the test materials used in this program. There is some indication that polyurethane foam may not completely retain some of the less polar but more volatile compounds, such as α-BHC. It is assumed that other porous polymer beads may also be good sorbents for the compounds tested in this program.

Although little difference in performance could be noted between Chromosorb 102 and Tenax GC, the Tenax did appear to generally collect more total material from ambient air than either the Chromosorb 102 or polyurethane foam, based on there being more color in the extracted ambient air samples.

SECTION 4

RECOMMENDATIONS

It is recommended that a new sampling module of the concept described in the text of this report be considered to replace the presently used SURC collecting module and that solid sorbents be used in place of liquid-coating glass beads. These recommendations are made for the following reasons:

1. Solid sorbents were found to be better sorbents than the liquid-coated glass beads evaluated.
2. The sampling module concept described allows freedom of choice of solid sorbents as well as the continued use of liquid-coated glass beads if desired.
3. The concept of a combined collector-extractor simplifies analysis.
4. Extraction from solid sorbents does not require the acetonitrile partitioning step that is required when cottonseed oil is used as the liquid sorbent.

Based on the limited number of compounds tested on this program, it would appear that either Chromosorb 102 or Tenax GC are marginally better collectors than polyether-type polyurethane foam and would therefore be preferred to polyurethane foam.

SECTION 5

EXPERIMENTAL AND RESULTS

A. First Year Work with SURC Collecting Module

1. Basic Sampling Equipment

Two SURC samplers of the original design were furnished to the Contractor by EPA. Components to fabricate two SURC collecting modules and extra components were also furnished by EPA. These samplers and collecting modules are adequately described in the report of the work under EPA Contract CPA-70-145* and will not be described here.

2. Test Pesticides

The test pesticides to be used in the program were chosen with one or more of the following considerations in mind:

- Chemical class (chlorinated pesticide, phosphorus-containing pesticide, carbamate-type pesticide),
- Vapor pressure (or relative GC elution time),
- Volume of usage in agriculture,
- Probability of occurrence in ambient air.

Table 1 lists the test pesticides by class.

3. Generation of Pesticide Vapor

Initially, it was felt desirable to generate pesticides during all or most of the 24-hour sampling period, and at least two types of pesticide generation were needed. The pesticides with very low vapor pressures may be deposited on a surface which is completely exposed to the sampling air stream only a few centimeters above the sorbent being tested. This can be almost any type of surface from which the pesticide can easily be removed by solvents so that a material balance can be calculated. A short piece (2 cm) of pipe cleaner (2-mm diameter) was found to be satisfactory for the test chlorinated pesticides with low vapor pressures. The more volatile chlorinated pesticides evaporate rapidly from the pipe cleaner. Control of the evaporation rate of the more volatile pesticides is exercised by depositing a few microliters of a hexane solution of the test pesticides in the bottom of a short, 4-mm O.D. tube.

- - - - - - - - - - -

* B. Compton, B. Bazydlo, and G. Zweig, "Field Evaluation of Methods of Collection and Analysis of Airborne Pesticides," Final Report, Contract CPA-70-145, U.S. Environmental Protection Agency, Research Triangle Park, N.C., May 1972 (NTIS No. PB-214008).

TABLE 1. TEST PESTICIDES

Class	Common Name	Chemical Name
Chlorinated		
	α-BHC	alpha-isomer of hexachloro-cyclohexane
	Lindane	gamma-isomer of hexachloro-cyclohexane
	Aldrin	1,2,3,4,10,10-hexachloro-1,4,4a,5,8,8a-hexahydro-1,4-endo-exo-5,8-dimethano-naphthalene
	p,p'-DDE	1,1-dichloro-2,2-bis (p-chloro-phenyl) ethylene
	p,p'-DDT	1,1,1-trichloro-2,2-bis (p-chlorophenyl) ethane
	Mirex	dodecachlorooctahydro-1,3,4-metheno-2H-cyclobuta-(cd) pentalene
Phosphorus-containing		
	Mevinphos	methyl 3-hydroxy-alpha crotonate, dimethyl phosphate
	Diazinon	0,0-diethyl 0-(2-isopropyl-6-methyl-4-pyrimidinyl) phosphorothioate
	Methyl Parathion	0,0-dimethyl-0-p-nitrophenyl phosphorothioate
Carbamates		
	Carbaryl	1-naphthyl-N-methylcarbamate
	Carbofuran	2,3-dihydro-2,2-dimethyl-7-benzofuranylmethylcarbamate

Table 1. Test Pesticides (Cont'd)

Class	Common Name	Chemical Name
Substitute Pesticides		
	Atrazine	2-chloro-4-(ethylamino)-6-(isopropylamino)-5-triazine
	Azodrin	dimethyl phosphate of 3-hydroxy-N-methylcrotonamide
	Benomyl	methyl 1-(butylcarbamoyl)-2-benzimidazolecarbamate
	Bromacil	5-bromo-3-sec-butyl-6-methyluracil
	CIPC	isopropyl N-(3-chlorophenyl) carbamate
	Diuron	3-(3,4-dichlorophenyl)-1-dimethylurea
	2,4D	2,4-dichlorophenoxyacetic acid
	Kepone	dechloro-octahydro-1,3,4-metheno-2H-cyclobuta (cd)=pentalen-2-one
	Lasso	2-chloro-2',6'-diethyl-N-(methoxy=methyl) acetanilide
	Propanil	3,4-dichloropropionanilide
	Trifluralin	α,α,α-trifluoro-2,6-dinitro-N,N-dipropyl-p-toluidine
Selected Polychlorinated biphenyls		2,5,2'-trichlorobiphenyl 2,6,2',6'-tetrachlorobiphenyl 2,3,4,2',5'-pentachlorobiphenyl 2,4,6,2',4',6'-hexachlorobiphenyl 2,3,4,5,6,2',5'-heptachlorobiphenyl
	Aroclor 1016	
	Aroclor 1254	

Figure 1 shows the measured amount of lindane lost from each tube after 24 hours when 1 μg was initially deposited in each of three glass tubes 4-mm O.D.; 1.0-, 2.0- and 5.0-cm long. Figure 2 shows the loss of DDE and p,p'-DDT with time when 1 μg of each was placed on the end of each of three pipe cleaners. These tests were conducted in a laboratory hood at room temperature to illustrate the principles involved. On this basis, it was decided to use a 1.0-cm length of 4-mm O.D. glass tubing for α-BHC, lindane, and aldrin and the pipe cleaner for DDE, p,p'-DDT, and mirex. One pesticide solution (Mix A) was made to contain 100 ng/μl each of α-BHC, lindane, and aldrin. Another pesticide solution (Mix B) was made to contain 100 ng/μl each of DDE, p,p'-DDT, and mirex. When generating pesticide vapors, 10 μl of Mix A was placed in the glass tube and 10 μl of Mix B was deposited on the tip of the pipe cleaner. The glass tube and pipe cleaner taken together constitute the "generator" when held in place. A metal ring with appropriate holes or a wire properly bent to hold the glass tube and pipe cleaner can be used to hang the generator at the proper site. This serves to eliminate sorption at undesired spots, which would result in a misleading data.

The basic design for testing the various sorbents is shown schematically in Figure 3. The legend is as follows:

Adapter	-	Machined metal head for fastening 5-cm I.D. glass pipe to high-volume sampler
W-1	-	Stainless steel screen wire to support material in Z-1
Z-1	-	Zone for coated glass beads or other test sorbent
W-2	-	Stainless steel screen wire to support solid sorbents in Z-2 when C is employed
C	-	Flanged cup (2-cm deep by 7.6-cm diameter) for holding solid test material
Z-2	-	Zone created by use of C
G	-	Generator position
W-3	-	Stainless steel screen wire for support of solid materials in Z-3.
Z-3	-	Zone for solid sorbent as prefilter to clean incoming air.

FIGURE 1. RATE OF LOSS OF LINDANE FROM SMALL BORE TUBING ORIGINALLY CONTAINING 1.0 μg

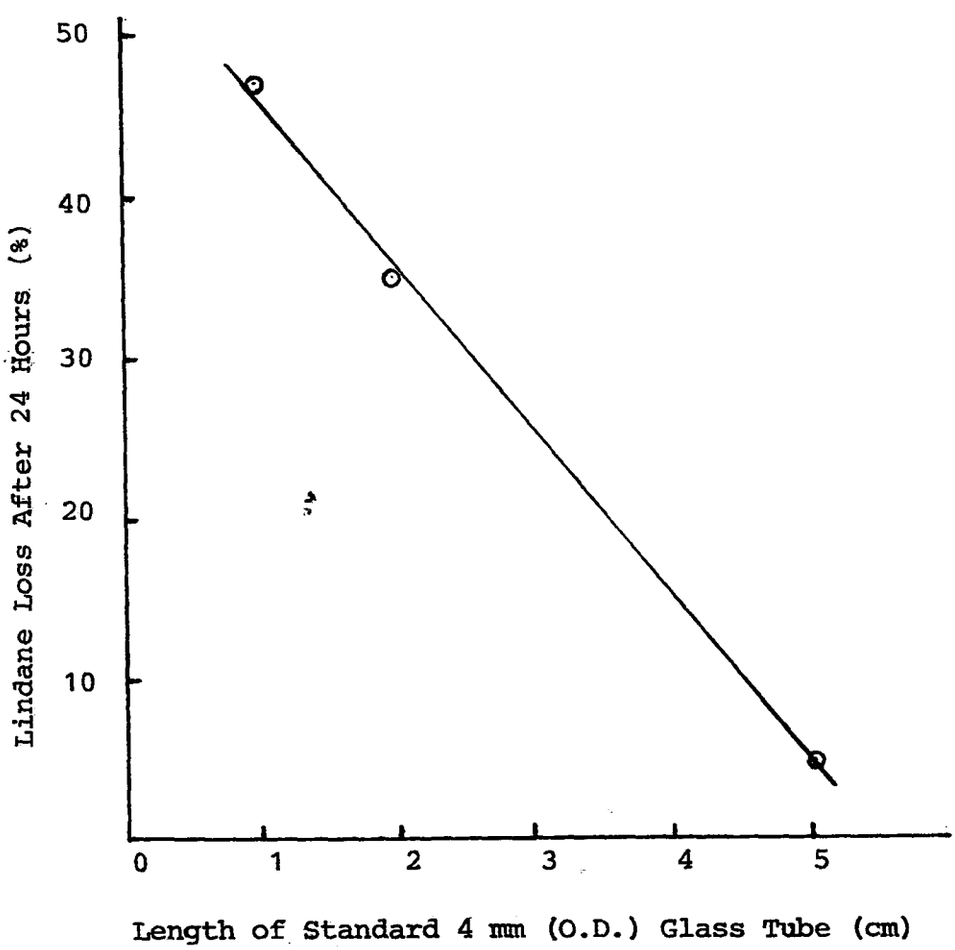

FIGURE 2. RATE OF PESTICIDE LOSS FROM PIPE CLEANER ORIGINALLY SPIKED WITH 1.0 μg OF EACH PESTICIDE

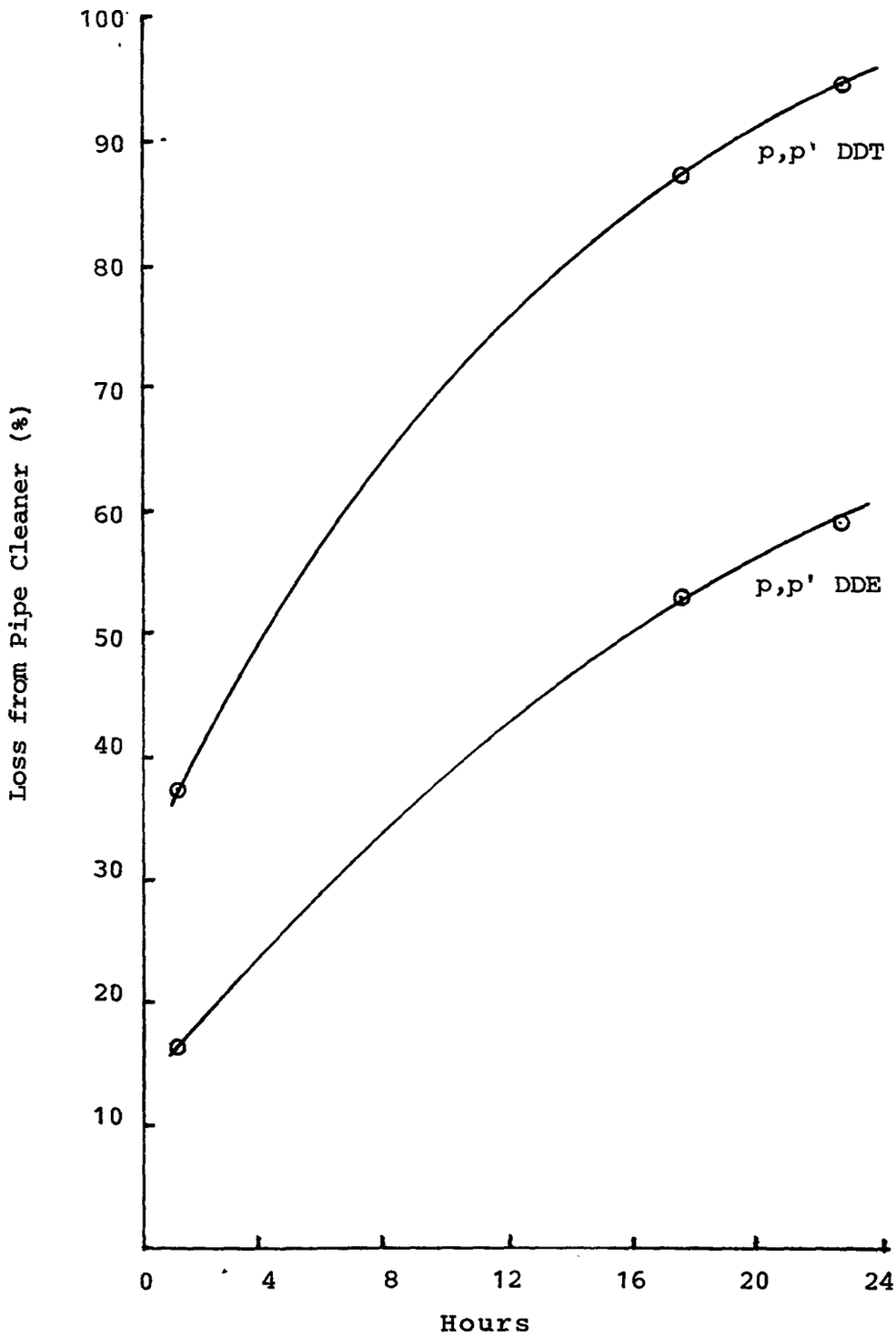

FIGURE 3. SCHEMATIC FOR PESTICIDE GENERATION AND COLLECTION

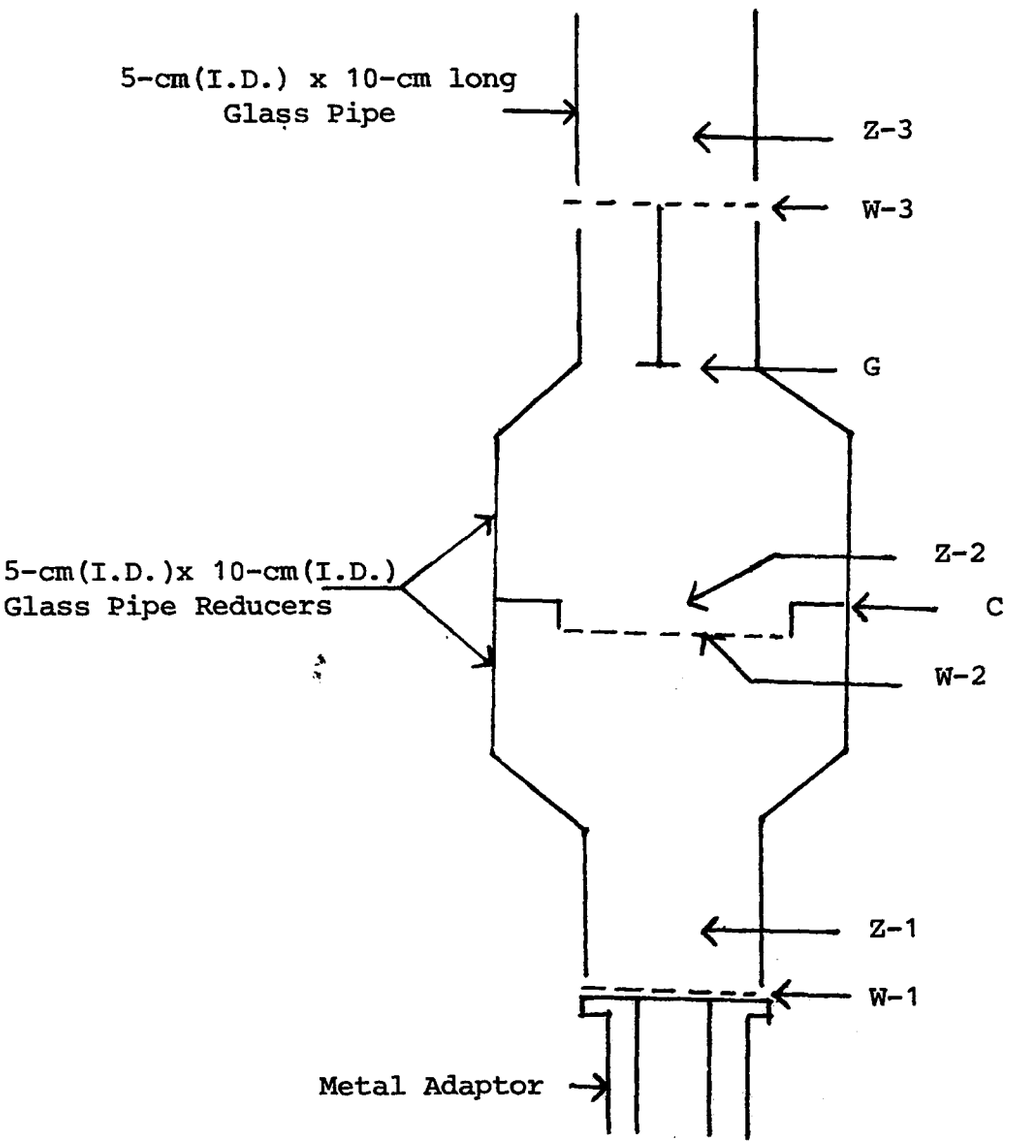

The test apparatus thus provided for filtration of intake air (Z-3), generation of pesticides (G), and evaluation of sorbent area (Z-2 or Z-1). Not shown are the Teflon and stainless steel couplings for clamping the various pieces together. Later these couplings were replaced (except for the coupling to the metal adapter) by wrapping the glass-to-glass connections with polyethylene film to make an air-tight seal. The test apparatus evolved, to some extent, over the course of the program; for example, the first few tests did not provide for filtering the intake air, in which case Z-3 was non-existent.

4. Gas Chromatographic Analysis - Chlorinated Pesticides

A Hewlett-Packard Model 5713A gas chromatograph equipped with an EC detector (Ni-63) was used for analysis of the chlorinated pesticides. A coiled glass column, 4-mm I.D. by 1.8-m length, packed with 1.5% OV-17 + 1.95% OV-210 on 80/100 mesh Gas-Chrom Q was employed. The carrier gas was 5% methane-95% argon at a flow rate of 60 ml/minute. The temperature of the inlet port was 225°C; column, 200°C; and detector, 300°C. All chromatographic measurements were based on peak heights.

5. Recovery of Chlorinated Pesticides from Generators

This test was performed to establish that the chlorinated test pesticides could be quantitatively recovered from the glass tube and from the pipe cleaner. The procedure was to inject 10 μl of Mix A into a tube and into a 10-ml volumetric flask (labeled S). Ten μl of Mix B was injected onto the top of a 2-cm length of pipe cleaner and into the same volumetric flask (S) as Mix A. After about 15 minutes, the glass tube and the pipe cleaner were both placed in a clean 10-ml volumetric flask containing 3-4 ml of pesticide grade n-hexane. Residual pesticides were washed from the tube in the following fashion: a 5-ml syringe equipped with a long (15-cm) needle was filled with hexane and the needle then inserted into the glass tube and the residue washed into the flask. The flask was then shaken for a minute or so to remove pesticides from the pipe cleaner. The glass tube and pipe cleaner remained in the flask, labeled G. Ten μl of internal standard solution (100 ng/μl DDD) was injected into both volumetric flasks (S and G) which

were then adjusted to final volume with hexane. A 4 μl aliquot of both standard (flask S) and sample (flask G) were chromatographed and pesticide recovery data calculations were made based on the commonly used method of employing an internal standard (DDD). This procedure was repeated five times to establish that a reliable recovery of pesticides from the generator was possible. The results of these tests, shown in Table 2, indicate essentially 100-percent recovery. All solvents used in this program were obtained from Burdick and Jackson Laboratories, Inc. as distilled in glass and suitable for pesticide analysis.

6. Sorption Media Evaluation Procedure

Evaluation of the various sorbent media was carried out in the following manner:

a. Procedure for Evaluating Coated Glass Beads

(1) Clamp the lower glass reducer to the adapter with screen W-1 in place (see Figure 3).

(2) Place 140 ml of the coated glass beads in Z-1 (supported by screen W-1).

(3) Inject 1 μg each of α-BHC, lindane, and aldrin (10 μl of Mix A) in a piece of 4-mm O.D. glass tube and into each of two 10-ml volumetric flasks (S and SM) containing 3-4 ml hexane. The S flask contains the standard to be used for collection efficiency determinations. The SM flask content is processed like a sample (if necessary) to determine method losses due to acetonitrile partitioning, etc.

(4) Inject 1 μg each of DDE, p,p'-DDT and mirex (10 μl of Mix B) into the volumetric flasks, S and SM, and 10 μl Mix B on tip of 2-cm piece of 2-mm pipe cleaner.

(5) Suspend the generator from screen W-2.

(6) Place glass fiber mat on W-2 as a particulate filter, or

(7) Suspend the generator from screen W-3 and place vapor filter (polyurethane foam, charcoal, etc.) and particulate filters in Z-3.

b. Procedure for Evaluating Solid Sorbents

The procedure for solid sorbents was much the same as for the coated glass beads except that solid sorbents were placed in zone Z-2 as well as in Zone Z-1. Also, small particle-size solid sorbents require a glass filter mat placed on the screen supports at W-1 and W-2. The larger cross-sectional area of Z-2 results in less resistance to flow than Z-1 for the same amount of solid sorbent.

TABLE 2. PERCENT RECOVERY OF PESTICIDES FROM GENERATORS

	Test 1	Test 2	Test 3	Test 4	Test 5	Avg.
α-BHC	105.3	103.4	101.7	100.4	101.7	102
Lindane	105.0	103.1	101.5	100.8	101.8	102
Aldrin	104.3	103.8	101.8	102.5	101.5	103
DDE	97.5	101.5	96.2	101.2	100.9	99
p,p'-DDT	103.8	103.3	98.3	103.0	100.6	102
Mirex	101.2	99.7	98.1	103.0	99.3	100

The generator and standards S and SM were prepared in exactly the same manner as in the coated glass beads procedure. The generator was suspended from the screens at either W-2 or W-3, as appropriate.

7. Sampling

When the sampling module had been set up as described for either coated glass beads or solid sorbents, the sampler motor was turned on, the air flow adjusted, and the sampler was then allowed to run 24 hours.

8. Sample Preparation

(a) The sampler motor was turned off after desired sampling time.

(b) The sampling module was carefully disassembled to enable recovery of generator. The 4-mm O.D. generator tube and 2-cm length of pipe cleaner were placed in a 10-ml volumetric flask containing 3-4 ml of hexane. This volumetric flask was labeled G and was set aside with S.

(c) The test sorbent, which had been exposed to the generated pesticide vapors, was placed in a thimble (Whatman, Cellulose, 43 x 123 mm, pre-extracted with pesticide grade n-hexane) for Soxhlet (Kontes, size #23) extraction and labeled CR. An equal amount of the unexposed test sorbent was placed in another thimble and the SM sample (amount of pesticides equal to that added to generator) quantitatively placed on this sorbent.

(d) The thimbles were placed in the Soxhlet apparatus and extracted for at least ten cycles with hexane at a rate of 4-5 cycles/hour.

(e) The extracts were then concentrated to 10 ml in Kuderna-Danish evaporative concentrators. If the CR sample showed need for Florisil cleanup, then SM was subjected to the same procedure.

(f) Ten μl of 100 ng/μl p,p'DDD (internal standard) in hexane was added to:

- S-volumetric flask - which contained the standard upon which all calculations were based,
- SM-volumetric flask - which contained the sample carried through the same extraction and cleanup as the test sorbent so that recovery of each test pesticide could be determined,
- G-volumetric flask - which contained the mixture used to determine pesticide residue in the generator (for calculation of loss of pesticides due to evaporation GE), and

- CR-volumetric flask - which contained the pesticides collected (for determination of theoretical recovery, TR).

(g) All volumetric flasks were made up to 10 ml with hexane and shaken to mix the DDD internal standard. The mixtures were then injected into the gas chromatograph.

9. Evaluation of Liquid Sorbents-Chlorinated Pesticides

a. Cottonseed Oil

The cottonseed oil (Matheson Coleman Bell, refined) furnished by EPA was cleaned up by several acetonitrile extractions of 90 ml of cottonseed oil in 200 ml of hexane. After the last (6th) extraction, the cottonseed oil was recovered by evaporation of the hexane in a rotary evaporator. Three (3) ml of the cottonseed oil was placed on the bottom of a 500-ml Erlenmeyer flask. The glass beads (140 ml, 3-mm diameter, Pyrex) were added. The flask was rotated until all the beads were evenly coated.

After collecting pesticides, the coated glass beads were transferred to a pre-extracted thimble and Soxhlet-extracted with hexane for at least ten cycles. An acetonitrile partition step was required to separate the pesticides from the cottonseed oil, which was removed from the beads along with the pesticides during extraction. Acetonitrile partitioning is a necessary but undesirable step in the overall method for determination of the chlorinated pesticides in this sorbent.

The first few tests using cottonseed oil as the sorbent indicated that there would have to be some kind of pre-filter to remove interfering compounds from the incoming air before it was passed over the pesticide generator and then into the test sorbent. The system developed for cleaning the air was based on the placement of a polyurethane plug (5 cm in height x 5 cm in diameter) in Z-3 and supported by W-3. On top of the polyurethane foam was placed 75-100 ml of "Adsorbit," an activated charcoal (4-8 mesh, quality - 50 minutes) manufactured by Barnebey-Cheney. The pressure drop across the charcoal-polyurethane foam pre-filter system was very small. The plug of polyurethane foam will collapse if much small-particle solid sorbent (Florisil, porous polymer beads, etc.) is placed on top of the foam.

The collection efficiencies of test pesticides from air by cottonseed oil are given in Table 3 for tests R-12-1 and R-12-8. It would appear that the more volatile compounds are not recovered completely.

b. DC-200

DC-200 (12,500 cs) was coated on glass beads by mixing 3 ml of DC-200 with about an equal volume of hexane in an Erlenmeyer flask. As the Erlenmeyer was turned and rotated, the hexane slowly evaporated leaving the beads coated with DC-200. The DC-200 on glass beads sorbent matrix was very difficult to load into the sampler as a very sticky mass was left after the hexane evaporated. Acetonitrile partitioning again was required for recovery of the extracted pesticides. Although the average temperature for this test was lower than that for cottonseed oil, recovery from DC-200 (R-13-1, R-13-8) was lower than that for cottonseed oil; therefore, this sorbent was not a candidate for further study.

c. DC-710

An attempt was made to use DC-710 as a sorbent. In the preliminary testing, acetonitrile partitioning was not effective and residual contamination caused inactivation of the gas chromatographic column, necessitating its replacement.

10. Evaluation of Solid Sorbents

The first solid sorbent investigated was polyurethane foam. For this purpose, 5.5-cm diameter plugs of polyurethane foam were cut by band saw from a piece of polyurethane foam 5-cm thick. The plugs were pre-extracted with hexane in a Soxhlet extractor (size 23) since this method had proved to be satisfactory for the polyurethane foam used to support the charcoal filter. The sorbent plug was fitted under slight compression into Z-1 (same placement as coated glass beads). Charcoal on polyurethane foam was used as a pre-filter. This test (R-14-1) was not successful. The ambient air temperature was too low and insufficient pesticide generation resulted. The samplers were moved into the laboratory building, since outside temperatures expected during the ensuing 2-3 months would be too low for efficient pesticide vapor generation.

TABLE 3. COLLECTION OF PESTICIDE VAPORS FROM AIR

Test No.	Sorbent	Quantity of Sorbent	Flow Rate (l/min)	% Collected					
				α-BHC	Lindane	Aldrin	DDE	DDT	Mirex
R-12-1	Cottonseed oil	3ml	278	30	54	14	73	85	82
R-12-8	"	3ml	278	40	41	2	78	67	57
R-13-1	DC-200	3ml	278	3	3	0	43	35	39
R-13-8	"	3ml	278	7	3	0	58	56	67
R-14	Polyurethane	5x5cm	278	Insufficient vaporization					
R-15	"	5x5cm	202	Contamination					
R-16	"	5x5cm	202	4	67	48	101	247	161
R-17	"	5x5cm	202	0	6	4	71	66	75
R-18	Cottonseed oil	3ml	253	21	40	6	65	41	54
R-19	DC-200	3ml	253	1	8	28	34	45	89
R-20	ABORTED			Motor burned out					
R-21	Chromosorb 102	40ml	101	78	90	12	30	22	22
R-22	Chromosorb 101	40ml	101	112	124	145	132	45	38
R-23	Chromosorb 102	40ml	≈76	31	68	12	62	41	63
R-24	Chromosorb 102	20ml	101	111	97	43	98	87	96
R-25	Chromosorb 101	20ml	101	92	83	55	66	41	167
R-26	Porapak-R	20ml	101	79	76	31	88	85	96
R-27	Tenax-GC	20ml	126	86	88	0	72	88	170
R-28	Porapak-R		101	BLANK RUN					
R-29	Porapak-R	20ml	101	94	90	47	84	79	98
R-30	ABORTED								
R-31	Chromosorb 101	80ml	177	98	88	102	91	94	91
R-32	Chromosorb 102	80ml	177	120	121	154	96	106	136
R-33	Porapak-R	80ml	114	134	120	84	89	100	—
R-34	Tenax-GC	80ml	177	90	106	134	103	80	83
R-35	Porapak-R	80ml	177	89	100	165	95	88	80
R-36	Polyurethane	5x5cm	227	12	80	59	103	77	98

The tests up to this time were run in duplicate with each sampler having its own generating system. With the samplers operated indoors, it was decided that one sampler would be run without a pesticide generator. Ideally, the results of the system without the generator when subtracted from the results of the system with the generator would give the best overall pesticide recovery data. This procedure was initiated with R-15.

Test R-15 deviated from the previous procedure in that unactivated Florisil (F-100, for pesticide residue separations)-polyurethane was used for prefiltration of the intake air instead of the charcoal-polyurethane combination. The sampling arrangement for this test was to put the polyurethane sorbent plug in Z-1, as before, and Z-2 was created by placing a wire screen and glass filter mat on the large end of the reducer held in place by the appropriate size stainless steel and Teflon clamp. The top part of the clamp was used as a receiver for 200 ml of Florisil as an air filter.

The motors became quite hot during sampling and the next morning there was an odor being emitted from the motors. The polyurethane foam plugs were extracted. The gas chromatographic analysis of the extract showed gross contamination. A few days after run R-15, instructions were received from the Project Officer to remove a condenser from each sampler motor since it may give off vapors of polychlorinated naphthalenes (especially when hot). The condensers were removed and R-16 was run exactly as R-15. The results of R-16 were slightly better, although there obviously was interfering material which resulted in generally poor results; the data still indicated a large loss of the more volatile compounds. Test R-16 was run indoors using a polyurethane plug as the sorbent and charcoal-plus-polyurethane as the filter. This test confirmed the earlier indications that the polyurethane plug is not a good sorbent for the higher-volatility compounds. It also confirmed that the charcoal-polyurethane filter system is the best for the intended purpose. The cottonseed oil (R-18) and the DC-200 (R-19) were tested indoors giving similar data to the outdoor tests (R-12-1, R-12-8). The two sorbents are not satisfactory for the more volatile compounds.

The samplers were moved back to the outdoor shed when better prospects for warm weather existed and the evaluation of solid sorbents proceeded. The porous polymer beads, Chromosorb 101, Chromosorb 102, Porapak-R, and Tenax-GC were Soxhlet-extracted with hexane preparatory to evaluation. The hexane extraction cleaned up the Tenax but not the Chromosorb 101, 102, and Porapak-R. The latter three were extracted with distilled in glass benzene but still required more cleanup. Soxhlet-extraction with distilled in glass dichloromethane proved to be an effective cleanup technique.

The first attempt (R-20) to test porous polymer beads resulted in a burned-out motor and the test was aborted. The burned-out motor was the result of insufficient air flow over the motor.

Tests R-21 through R-27 were made by placing a known volume (40 or 20 ml) of the porous polymer beads on a wire screen-supported glass filter mat in Z-1. The charcoal-polyurethane filter system was in Z-3. The air flow of 116 l/min was obtained using the bypass valve so that it was at least half open. By not closing the bypass valve more than halfway, the motor gets ample cooling. After collecting for 24 hours, the beads were Soxhlet-extracted with hexane, evaporated in a Kuderna-Danish evaporator and injected into the chromatograph.

The results of this series of tests (R-21 through R-27) were somewhat erratic. It had been considered that the stainless steel and Teflon clamp might not be making a good seal and/or the cracked rubber of the clamps could be at fault. A system without the clamps upstream of the collecting medium was made by wrapping polyethylene film (5 to 7-cm wide) around the glass-to-glass connections. The regular small clamp was used to connect the small end of the glass reducer to the metal sample inlet, since it is downstream and should have little effect on the results. Test R-29 was made with Porapak-R in Z-1 and the charcoal filter in Z-3 and the two glass-to-glass connections wrapped with polyethylene film. The results of this test were encouraging.

With the porous polymer beads and the supporting glass filter mat in Z-1, the air sampling rate is decreased. In an attempt to regain

some of the lost sampling rate, a flanged cup was made for each sampler. The O.D. of the flange was made slightly smaller than the O.D. of the large end of the glass reducer. A neoprene gasket was used to make a seal between the flange and the bottom glass reducer. The top glass reducer was left as a metal-to-glass connection. The connection was then wrapped tightly with the polyethylene film to make an airtight seal. The cup itself is about 7.6 cm in diameter and 2 cm deep, holding close to 80 ml of porous polymer beads when the wire screen-supported glass filter mat is in place. A short section of 5-cm I.D. glass pipe was connected to the small end of the top reducer (with screen wire between the two glass pieces) by again wrapping the connection with polyethylene to make an airtight seal.

Tests R-31 through R-35 were performed using the Z-2 (metal cup) area for 80 ml of porous polymer beads and polyethylene seal connections. Test R-36 employed polyethylene seal connections with the test polyurethane foam in Z-1.

11. Discussion of Collection Efficiency Results with SURC Sampling Module

The results of the collection efficiency experiments using basically the SURC collecting module with a variety of sorbents for the chlorinated pesticides are shown in Table 3 above. These data are not very satisfactory for a number of reasons but do indicate that the solid sorbents may be better sorbents than the liquids tested. Sample cleanup is also simplified with the solid sorbents since acetonitrile partitioning is not required.

The basic problem with the program at this point in time was the inability to change solid sorbents with only minimal changes to the sampling system. It became apparent that the different sorbents could be evaluated on a good comparative basis only if a new sampling concept could be developed.

During the course of the program, the EPA also determined that the samplers were so designed that considerable recirculation of air occurred. That is, air leaving the vacuum motor was immediately redrawn through the system. This was particularly bad during the

program because the motors were being overworked and consequently were running overly hot, which caused increased emissions of possible interferences.

Based on the results and problems of the first year's work, it was recommended that a new collecting module concept be developed that would enable the use of a variety of solid forms with only one basic sampling procedure.

B. Second Year's Work with SwRI Collecting Module

1. SwRI Collecting Module

Based on the past experience with the SURC sampler, as furnished to Southwest Research Institute by the Environmental Protection Agency, the modifications to be made to the sampling module were based on the following considerations:

(1) Capability of accepting liquid-coated glass beads, polyurethane foam, and small-size particulate matter such as 60 to 80-mesh porous polymer beads or other solids.

(2) Design of the cartridge type so as to permit the entire cartridge to be extracted, thus eliminating transfer of sorbent to other containers.

(3) Ease of keeping clean after cleaning.

(4) Ease of packing and mailing.

(5) Glass construction.

All these considerations may not be necessary for evaluation of various sorbents. However, since the entire apparatus and procedure would eventually have to be checked, the stated considerations helped direct the development of the test apparatus to be used with the sampling system. It should be understood that the modifications affect only the collection module of the SURC sampler for sampling purposes.

The original thinking on the modification was to use a glass Soxhlet thimble which could be used as the collector (with appropriate sorbent) and could be Soxhlet-extracted to recover collected pesticides. Holes in the glass near the top could, with help of spring-wire tongs, be used as a means of moving the thimble when necessary without contaminating the glass surface. For storage and shipping purposes, the thimble,

with its contents, would be protected by placing it in an appropriate container. A size 24 Soxhlet extractor was chosen as the largest that can be conveniently handled. The diameter of the glass frit in a size 24 thimble is approximately 50 mm. It was soon discovered that insufficient air flow could be pulled through this glass frit by the air sampler pump. The O.D. of the size 24 thimble is 57 mm. Measurement showed, however, that the standard wall 64-mm O.D. Pyrex glass tubing will fit in the size 24 Soxhlet. Fritted glass thimbles were made using the 64-mm O.D. tubing. It was finally concluded that the state-of-the-art for making glass frits was not advanced enough to consistently permit the desired high air flow rates. Satisfactory flows can be obtained by using 100-mesh stainless steel cloth or a thin compressed layer of glass wool instead of the fritted glass.

The sample collector as now designed consists of the following component parts:

a. Collector-extractor

(1) The collector-extractor is essentially a glass Soxhlet thimble with various modifications appropriate to considerations of the solid sorbent. The principal part of the collector-extractor is a 150-mm length of standard 64-mm O.D. Pyrex glass tubing which may have 0, 1, or 2 indentations (internal rolled rims) to serve as internal supports. Figure 4 shows a collector-extractor with two (2) internal rolled rims and shows how the retaining screens are clamped to the rolled rims. This design is for porous polymer beads or other solids of similar size. It is not necessary to disassemble the unit for extraction since the entire unit can be placed in the Soxhlet extractor. After extraction the remaining solvent is evaporated and the collector-extractor is ready for reuse.

(2) An alternate design has only the one rolled rim at the lower location. With this design the retaining screen is clamped to the top side of the rolled rim by a center screw which threads in a clamping bar, which locks against the bottom side of the single rolled rim. Solid sorbent or liquid-coated glass beads can be retained by glass wool held in place by a spring arrangement.

FIGURE 4. COLLECTOR-EXTRACTOR

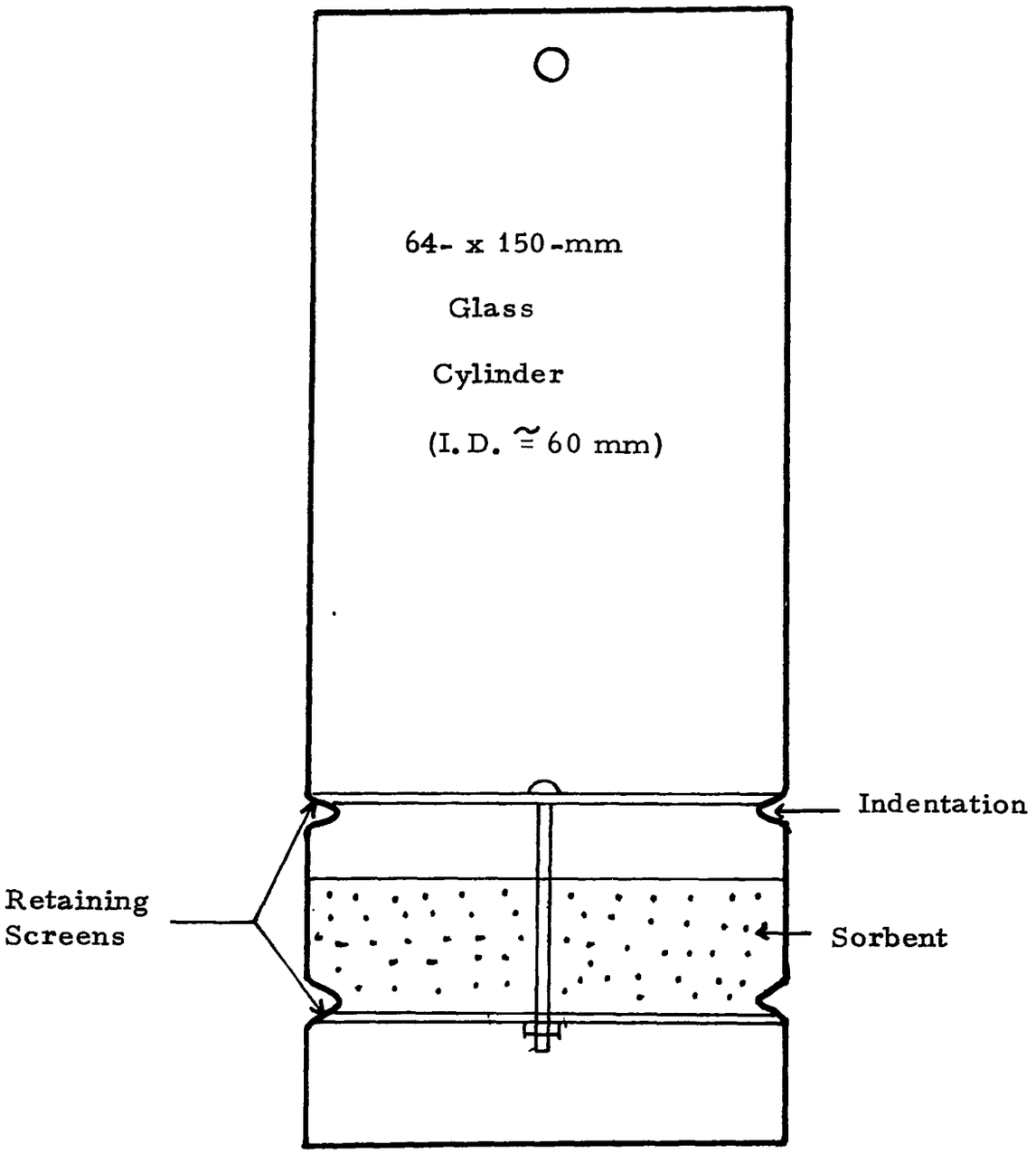

(3) A plain glass cylinder (no rolled rims) can be used with polyurethane foam which makes a tight press-fit.

(4) Other modifications of the 64- x 150-mm tube can be made as long as they allow placement of the tube in the Soxhlet extractor.

b. Adapter

With the SURC collecting module, a small platform was used to provide a means of fastening the glass pipe reducer (containing the coated beads) to the high-volume air sampler. This platform is removed and the adapter shown in Figure 5 is fastened to the pipe nipple. As can be seen in Figure 5 the adapter is merely a thin-walled aluminum cylinder in which the collector-extractor is placed when sampling. The collector-extractor extends about 5 cm above the cylinder and the aluminum-to-glass seal is made by wrapping with Teflon tape, followed by polyethylene tape held tight with electrical tape. Other sealing arrangements would also be satisfactory.

c. Filter Holder

The filter holder as shown in Figure 5 was fabricated from a commercially available 4" (10-cm) filter holder (Curtin Matheson Scientific, Inc., Beltsville, Maryland, Cat. No. 090-027) and adapted to make another "wrap" seal connection to the collector-extractor. A flanged aluminum cylinder was also fabricated to seal against the glass fiber filter and provide a container for the granular charcoal used to clean the incoming air. This charcoal pre-filter would not be used in actual ambient air sampling.

2. Test Pesticides and Related Compounds

Additional test pesticides and related materials and compounds were added to the original list of chlorinated pesticides, organophosphate pesticides, and carbamate pesticides. The additional materials and compounds to be tested were as follows:

Aroclor 1016
Aroclor 1254
2,5,2'-trichlorobiphenyl
2,6,2',6'-tetrachlorobiphenyl
2,3,4,2',5'-pentachlorobiphenyl
2,4,6,2',4',6'-hexachlorobiphenyl
2,3,4,5,6,2',5'-heptachlorobiphenyl

FIGURE 5. SAMPLING MODULE

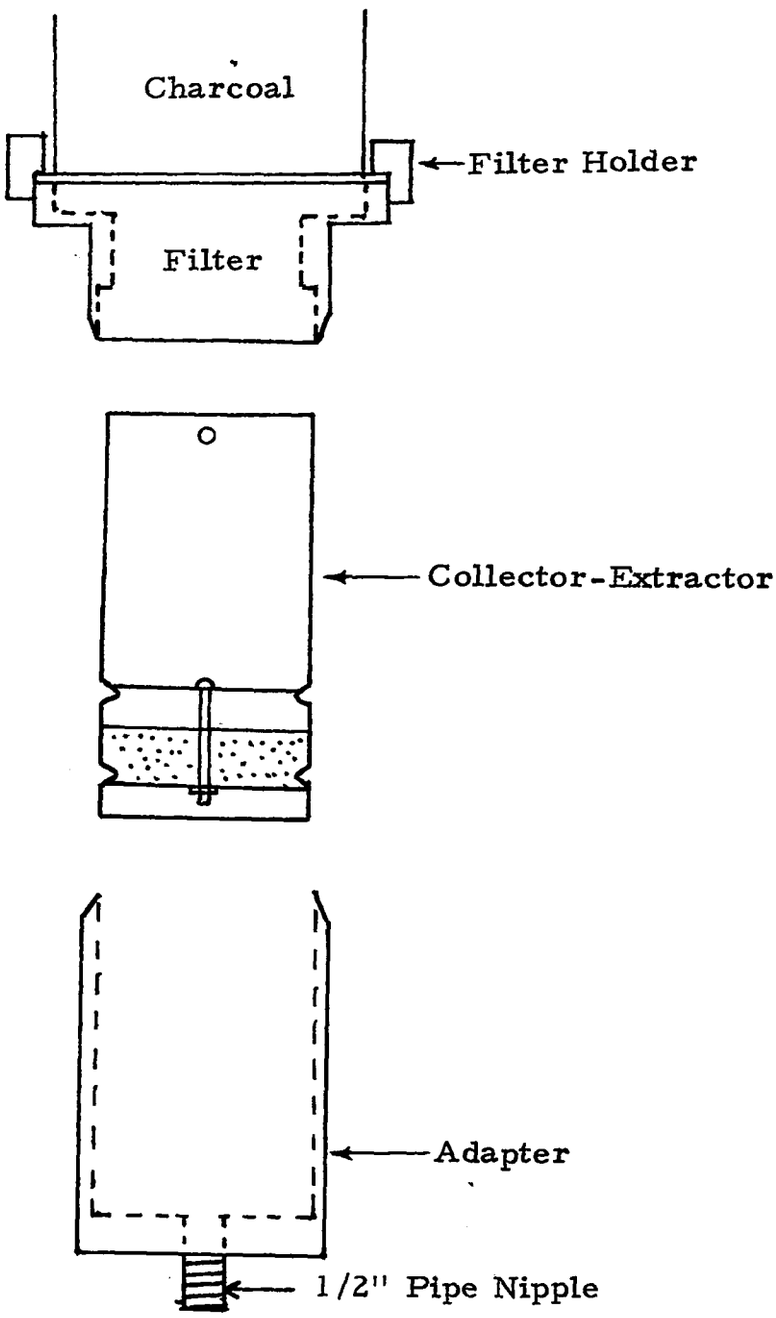

Time permitting, as many as possible of the following substitute pesticides were to be tested.

Atrazine	CIPC	Lasso
Azodrine	Diuron	Propanil
Benomyl	2,4D	Trifluralin
Bromacil	Kepone	

3. Pesticide Generation

The method of pesticide generation previously described and as used in the first year's work performed well but was changed to a simpler system for the remainder of the work. One solution containing known amounts of each compound or material was made for each series of tests. A known amount of this solution was placed on a small piece of glass fiber filter. This piece of glass fiber filter (generator) was placed on a wire screen over the collector-extractor just before the filter holder was put in position and the sampler started.

This change in generator was made to simplify and shorten generator preparation time and to ensure more complete volatilization of the test pesticides.

4. Gas Chromatographic Analysis

A Hewlett-Packard Model 5713A gas chromatograph equipped with an EC detector (Ni-63) was used for most of the work. A coiled glass column, 4-mm (I.D.) by 1.8-m in length, packed with 1.5% OV-17 + 1.95% OV-210 on 80/100 mesh Gas Chrom Q, was used. The carrier gas was 5% methane-95% argon at a flow rate of 60-ml/minute. The inlet temperature was 225°C and the detector temperature was 300°C. The column temperature varied from 160°C to 200°C depending on what group of compounds was being analyzed. This same instrument with a stainless steel 1/8" x 50-cm column of 10% UC-W98 on 80/100 mesh Chromosorb W was used for the work with the substitute pesticides.

The 10% UC-W98 column in a Tracor MT-220 gas chromatograph equipped with a Hall Electrolytic Conductivity Detector (Model 310) was used for analysis of the two carbamates, carbaryl and carbofuran. Two other columns that were reported to perform well with carbaryl were not found to be satisfactory. The 10% UC-W98 column, purchased from Hewlett-Packard, worked well with both carbamates and because of this was also used with the substitute pesticides. All chromatographic recovery data was based on peak height comparison of each peak with the corresponding peak

height in the standard sample; i.e., external standardization.

5. Other Equipment Changes

For this part of the work, two (2) high-volume samplers of improved design were received from EPA. These improvements were in the design of the sampling system (exclusive of the collecting module) and the flow measuring devices. The system capabilities were unchanged; therefore, engineering changes will not be discussed further in this report. The system is described by Lewis, et al*.

It was recommended that ducts be provided to direct the hot exit air from the motors away from the sample intake. This was accomplished by adapting a commercially available home dryer duct to each motor which carried exit gas away from the samplers.

6. Sorbents to be Evaluated

a. Polyurethane Foam

The polyurethane foam was obtained locally from the manufacturer (Foam Products of San Antonio, Inc.). It was identified as an open-cell polyether-type #1545 polyurethane foam. Two foam plugs 7.0-cm diameter x 7.6-cm in length were cut and each was compressed (about 14%) to fit into a single indentation (with screen wire) 6.0-cm I.D. collector-extractor tube. They were initially prepared by Soxhlet-extracting for 16 hours with 5% diethylether in hexane. These same two polyurethane plugs were used throughout the remainder of the project.

b. Tenax-GC

Tenax-GC, 35/60 mesh, was obtained from Applied Science Laboratories, Inc., State College, Pennsylvania. The fines were removed by passing high velocity air through a bed of the Tenax. Two traps of the two-rim type (Figure 4) were prepared with 40 ml each of the Tenax-GC. They were initially conditioned by Soxhlet-extracting for 16 hours with hexane. These same two traps were used throughout the remainder of the project.

---

* R. G. Lewis, A. R. Brown and M. D. Jackson, "Evaluation of Polyurethane Foam for Sampling of Pesticides, Polychlorinated Biphenyls, and Polychlorinated Naphthalenes in Ambient Air, Anal. Chem., 40 (10), in press, September, 1977.

c. Chromosorb 102

Chromosorb 102, 20/30 mesh, was obtained from Johns-Manville, Denver, Colorado. This larger particle-size Chromosorb 102 permitted the higher air flows required by the program. Two traps of the one-rim type were made with 50 ml each of the Chromosorb 102. They were initially prepared by Soxhlet-extraction for 16 hours with 5% ethyl ether in hexane. These same two traps were used throughout the remainder of the project.

7. Sorbent Evaluation Procedure

The pesticide generator was prepared by placing a known amount of pesticide (or other material) on a small piece of glass fiber filter mat which in turn was placed on a screen supported by the top edge of glass collector. The system (Figure 5), when in use for testing, performed in the following manner: Air was pulled through the charcoal bed (125 ml) at a measured rate to eliminate or reduce volatile air contaminants and then through a 10-cm diameter glass fiber filter to remove particulate matter. The precleaned air was next passed over the pesticide generator where the vaporized pesticide (or other materials) was introduced into the airstream. The air was then immediately passed through the test sorbent.

After the test period (24 hours), the generator strip was placed in 10 ml hexane in a volumetric flask to recover any nonvolatilized test material. The collector-extractor was placed in a Soxhlet and extracted for 4 hours at 10-12 minutes per cycle. Pure hexane was used to extract the Tenax-GC and 5% ethyl ether in hexane was used to extract both the polyurethane foam and the Chromosorb 102. The polyurethane foam was compressed about 70% while being extracted. A screen wire was placed on top of the foam and the foam compressed between this screen and the screen already in place. A spring wire held the foam in the compressed state during extraction. The extract from the test sorbent (about 600 ml) was concentrated to 10 ml in a Kuderna-Danish evaporator. The samples were chromatographed without further cleanup. Recovery data were based on the percent recovered relative to that which was lost from the generator. The actual amounts recovered or left on the generator were

determined by peak height comparison to standards prepared at the same time as the generator. That is, the standard represented 100% recovery.

8. Sorbent Evaluations

a. Chlorinated Pesticides

Average collection efficiencies for the chlorinated pesticides by the test sorbents are summarized in Table 4. A chromatogram of the standard chlorinated pesticide mixture is shown in Figure 6. Detailed data sheets for each of the tests with the chlorinated pesticides series are given in Appendix I.

The chlorinated pesticides used were α-BHC, lindane, aldrin, p,p'-DDE, p,p'-DDT, and mirex. One microgram (1 μg) of each was deposited on the generator. Complete vaporization of pesticides resulted in most cases, with the exception of mirex.

The collection efficiencies for all test pesticides were generally high with Tenax-GC and Chromosorb 102. Collection of α-BHC and aldrin was poor for the polyurethane foam plug.

b. Mixed polychlorinated biphenyls (PCB's)

Collection efficiency data for the synthetic mixture of PCB's are summarized in Table 5. A chromatogram of the standard mixture is presented in Figure 7. Detailed data sheets for each of the tests in the series are contained in Appendix II.

The PCB's used were:

B3 2,5,2'-trichlorobiphenyl
B4 2,6,2',6'-tetrachlorobiphenyl
B5 2,3,4,2',5'-pentachlorobiphenyl
B6 2,4,6,2',4',6'-hexachlorobiphenyl
B7 2,3,4,5,6,2',5'-heptachlorobiphenyl

One microgram (1 μg) of each was deposited on the generator. Vaporization of all compounds was complete. Collection efficiencies for all PCB's were good with Tenax-GC and Chromosorb 102. Collection of 2,5,2'-trichlorobiphenyl (B3) was poor with polyurethane foam.

c. Aroclor 1016

Averaged data for the collection of several components of Aroclor 1016 by the solid sorbents are summarized in Table 6. Selected dominant GC peaks were monitored for calculation of collection efficiencies.

TABLE 4. CHLORINATED PESTICIDES

Test	Sorbent	Temperature °C Max.	Temperature °C Min.	Sampling Rate l/min	% Collected α-BHC	Lin.	Ald.	DDE	DDT	Mir.
R-68	Poly-U	31	25	280	44	--	58	--	86	83
R-81A	"	30	25	280	25	86	27	103	102	105
R-81B	"	30	25	280	25	89	34	132	100	100
R-69	Chromo-102	31	26	258	97	88	83	91	90	87
R-70	Tenax	32	28	245	84	84	85	80	87	88

FIGURE 6. GAS CHROMATOGRAM OF CHLORINATED PESTICIDES STANDARD

Column: 1.5% OV-17/1.95% QF-1 at 200°C

Detector: Nickel-63 Electron Capture, Pulsed Mode

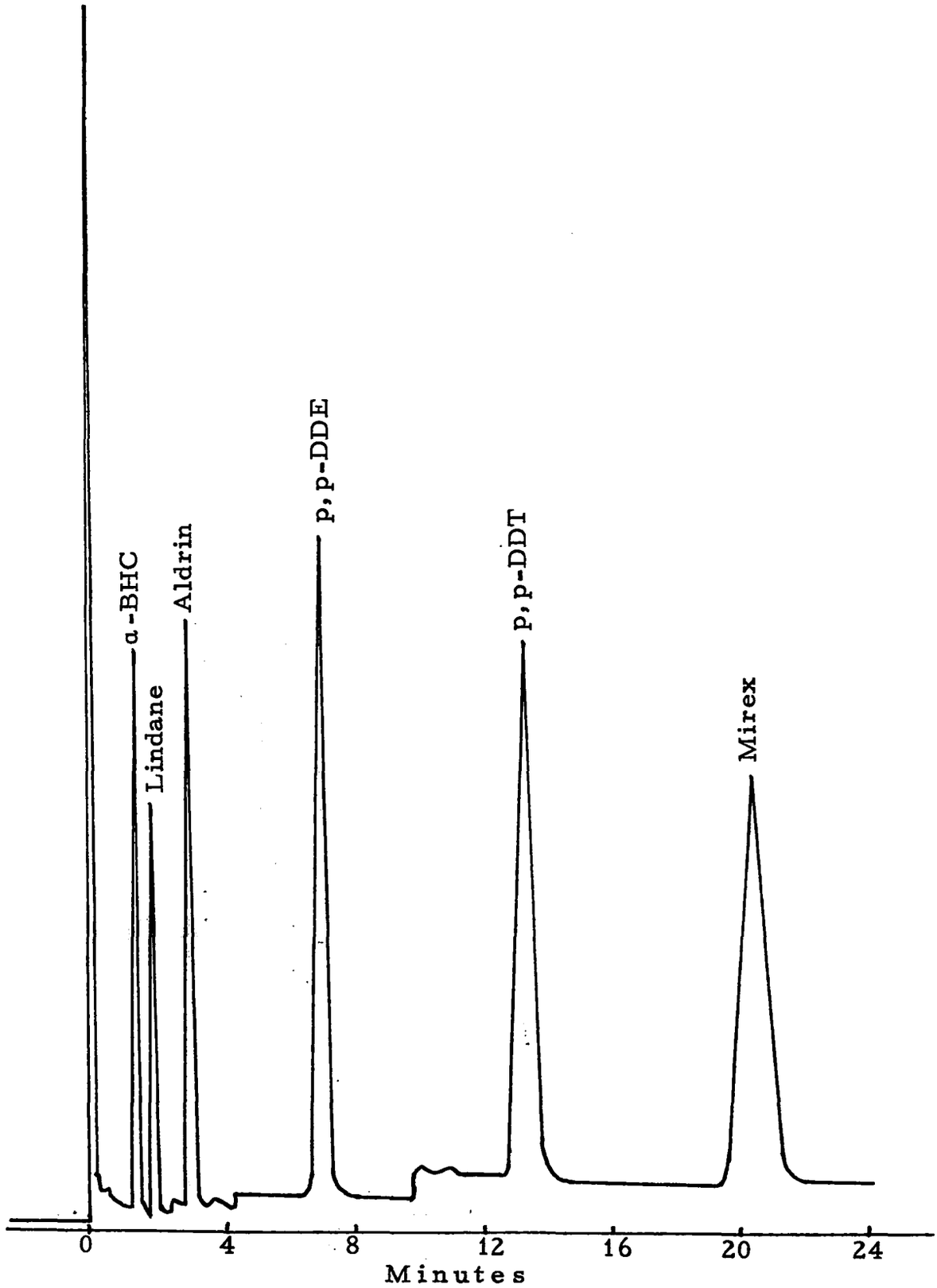

TABLE 5. SYNTHETIC PCB MIXTURE

Test	Sorbent	Temperature °C Max.	Min.	Sampling Rate l/min	% Collected B3	B4	B6	B5	B7
R-76	Poly-U	30	25	280	30	90	99	103	96
R-75	Chromo-102	29	27	253	108	121	102	109	106
R-74	Tenax	28	25	253	107	124	97	103	94

KEY:
B3 = 2,5,2'-trichlorobiphenyl
B4 = 2,6,2',6'-tetrachlorobiphenyl
B5 = 2,3,4,2',5'-pentachlorobiphenyl
B6 = 2,4,6,2',4',6'-hexachlorobiphenyl
B7 = 2,3,4,5,6,2',5'-heptachlorobiphenyl

FIGURE 7. GAS CHROMATOGRAM OF MIXED PCB STANDARD

1.5% OV-17/1.95% QF-1 at 200°C
Nickel-63 Electron Capture Detector, Pulsed Mode

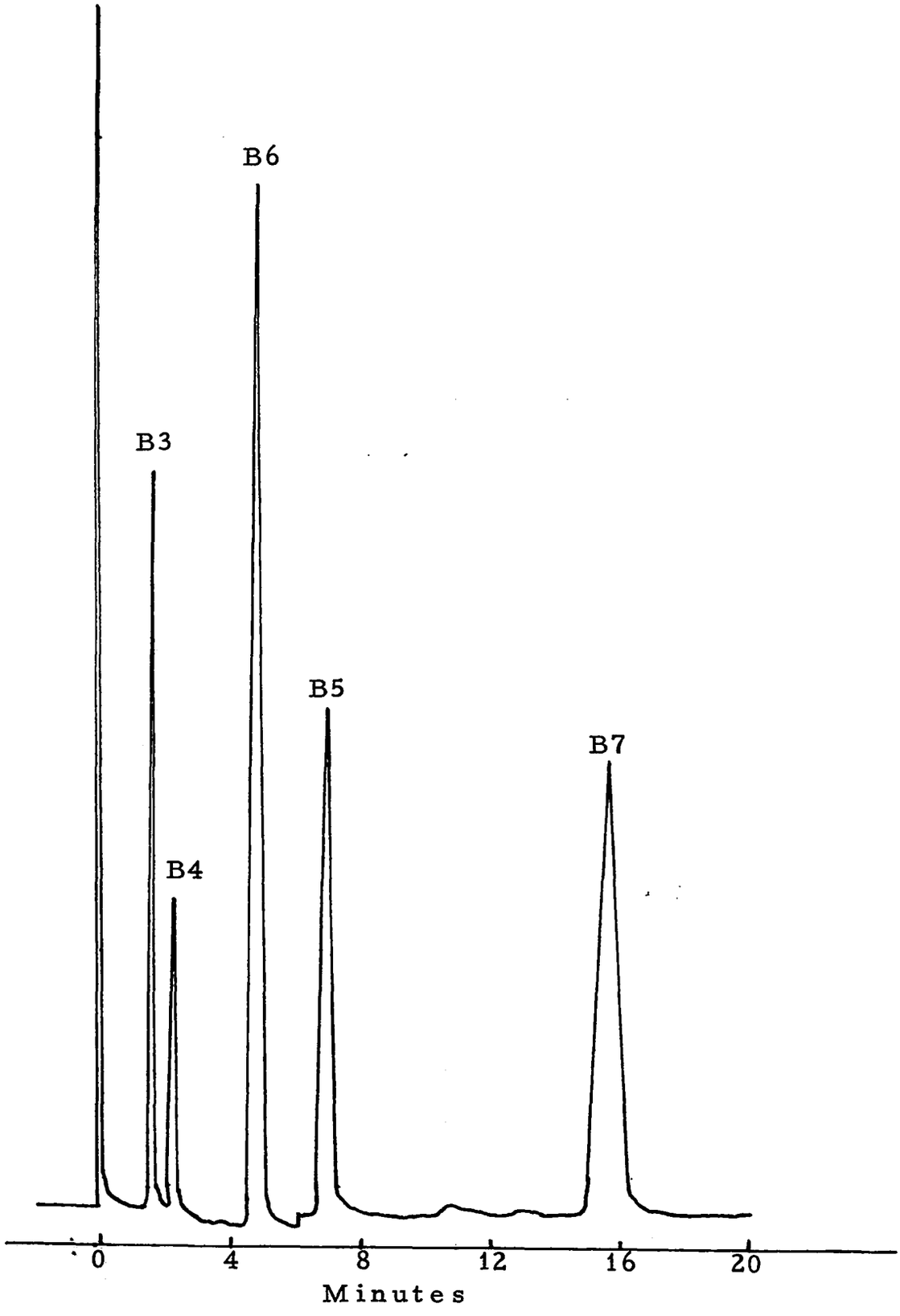

TABLE 6. AROCLOR 1016

Test	Sorbent	Temperature °C Max.	Temperature °C Min.	Sampling Rate l/min	% Collected, by Component A	B	C	D	E
R-77	Poly-U	29	24	280	78	66	111	116	111
R-78	Chromo-102	30	25	253	107	102	99	100	100
R-80	Tenax	31	27	265	99	104	99	94	98

A chromatogram of the Aroclor 1016 standard is given in Figure 8. Detailed data sheets for each test of the series are contained in Appendix III.

Since Aroclor 1016 is a complex mixture, various peaks in the chromatogram were given identification letters (A,B,C,D,E) for test purposes. Ten micrograms (10 μg) of Aroclor 1016 was deposited on the generator. Vaporization of all components monitored was complete. The collection efficiencies for all monitored compounds were good with Tenax-GC and Chromosorb 102. Collection recovery of components A and B were less than desirable with the polyurethane foam.

d. Aroclor 1254

Average collection efficiency data for various components of Aroclor 1254 are given in Table 7. Selected dominant GC peaks were monitored for recovery calculations. A chromatogram of the Aroclor 1254 standard is given in Figure 9. Detailed data sheets for each test of the series are given in Appendix IV.

Aroclor 1254, like Aroclor 1016, is a complex mixture and various peaks on the gas chromatogram were given identification numbers (1,2,3,4,5,6,7) for test purposes. Ten micrograms (10 μg) of Aroclor 1254 was deposited on the generator. Vaporization of all monitored components was complete except for 5, 6, and 7 on R-73, for which 10% or less remained on the generator. The collection of all monitored components appears to be good for all test sorbents, including polyurethane foam.

e. Organophosphate Pesticides

Average collection efficiency values for the test organophosphate pesticides are presented in Table 8. A chromatogram of the organophosphate pesticide standard mixture is given in Figure 10. Detailed data sheets for each test of the series are contained in Appendix V.

The organophosphate pesticides used were mevinphos, Diazinon, and methyl parathion. Quantities placed on the vapor generator were 10 μg mevinphos, 3 μg Diazinon, and 1 μg methyl parathion. Complete vaporization of all pesticides occurred in all tests.

FIGURE 8. GAS CHROMATOGRAM OF AROCLOR 1016

1.5% OV-17/1.95% QF-1 at 160°C
Nickel-63 Detector, Pulsed Mode
Letters designate peaks used for determination of collection efficiencies.

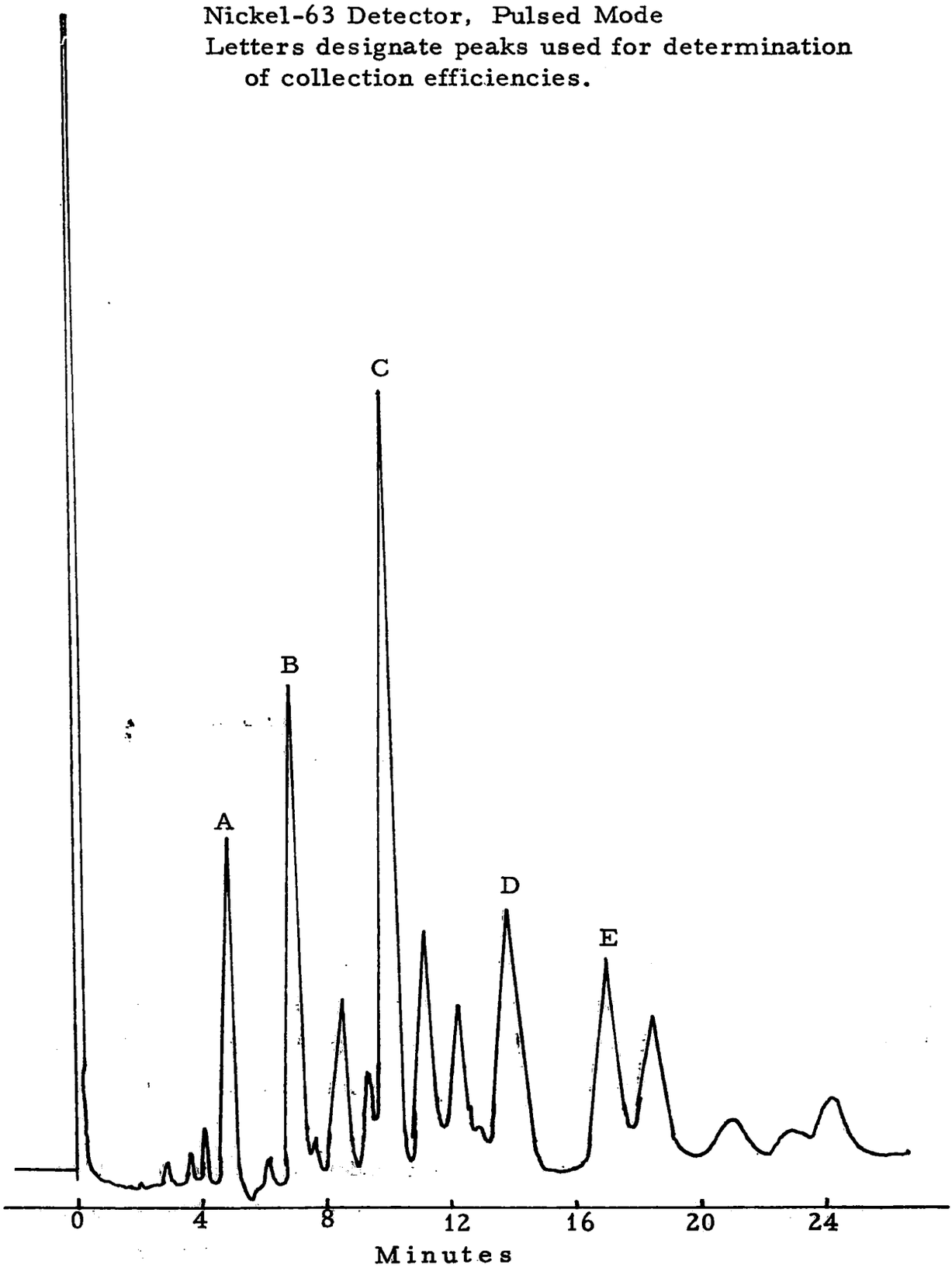

TABLE 7. AROCLOR 1254

Test	Sorbent	Temperature °C Max.	Temperature °C Min.	Sampling Rate l/min	% Collection, by Component 1	2	3	4	5	6	7
R-73	Poly-U	30	21	285	151	105	120	103	102	100	102
R-71	Chromo-102	32	27	260	181	105	115	99	94	96	99
R-72	Tenax	29	16	258	159	111	127	111	102	100	101

FIGURE 9. GAS CHROMATOGRAM OF AROCLOR 1254 STANDARD

1.5% OV-17/1.95% QF-1 at 190°C
Nickel-63 Electron Capture Detector, Pulsed Mode
Numerals indicate peaks used to calculate collection efficiencies.

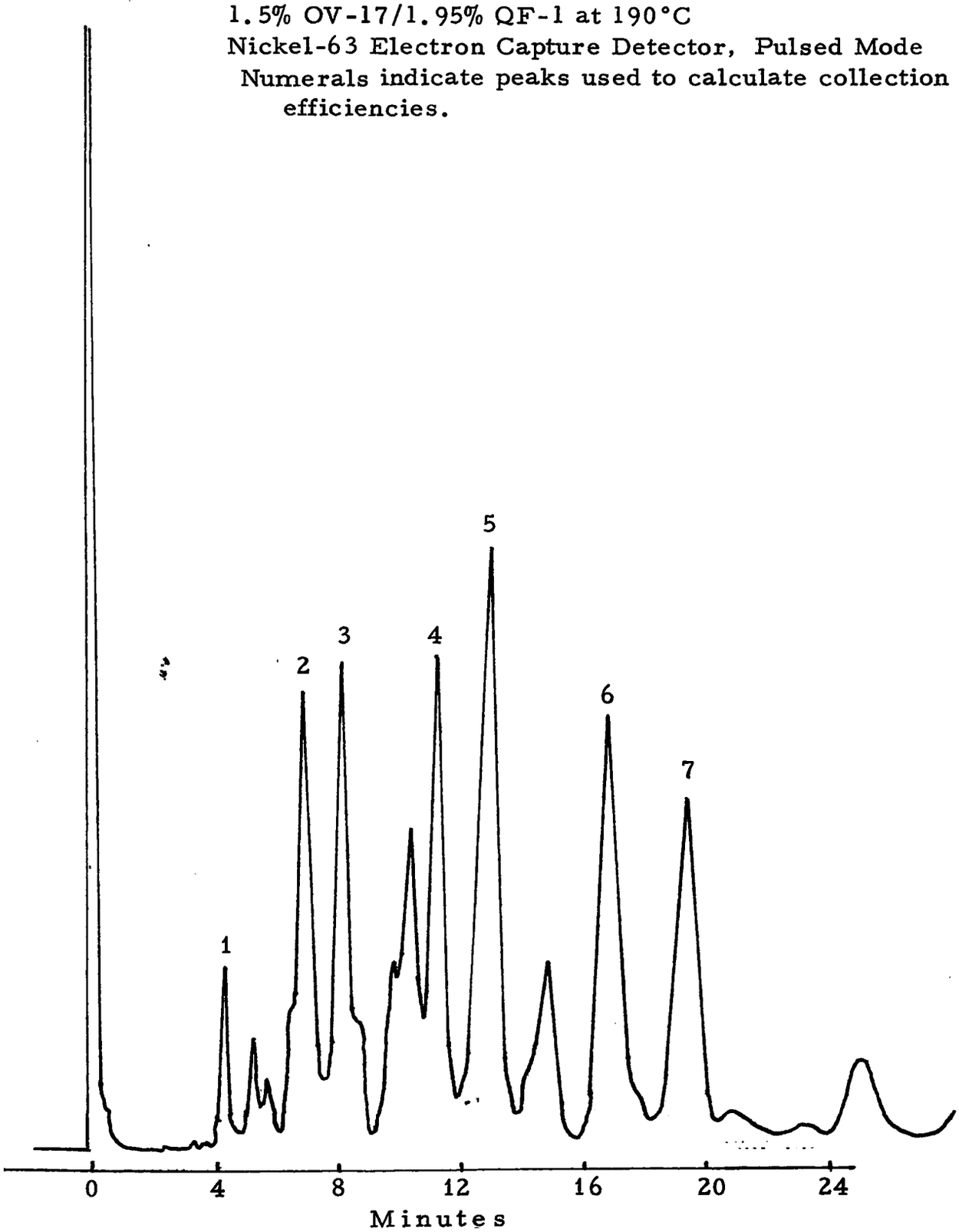

TABLE 8. PHOSPHATE PESTICIDES

Test	Sorbent	Temperature °C Max.	Min.	Sampling Rate l/min	% Collected Mevinphos	Diazinon	Et. Parathion
96A	Chromo 102	26	18	240	92	94	95
96B	Chromo 102	26	18	240	94	94	89
97A	Poly U	27	17	240	92	103	95
97B	Poly U	27	17	240	98	107	96
98A	Tenax GC	27	18	240	108	96	97
98B	Tenax GC	27	18	240	102	91	97

FIGURE 10. GAS CHROMATOGRAM OF PHOSPHATES PESTICIDES STANDARD

1.5% OV-17/1.95% QF-1 at 185°C
Detector: Electron Capture, Ni-63, Pulsed Mode

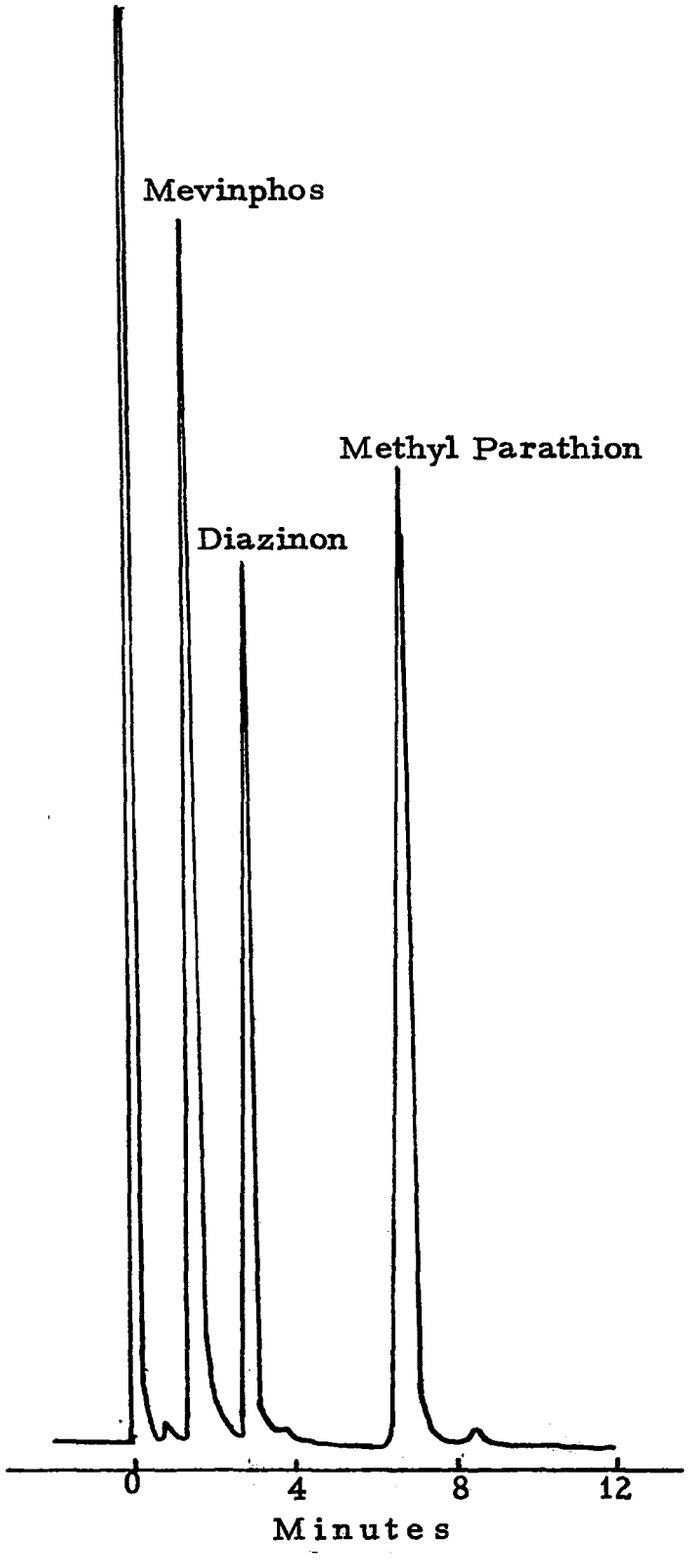

Collection of all test organophosphates by all test sorbents (Tenax, Chromosorb 102, and polyurethane foam) was good.

f. Carbamate Pesticides

Average values for the collection of the test carbamate pesticides are summarized in Table 9. A chromatogram of the carbamate standard is given in Figure 11. Detailed data sheets for each test of the series are presented in Appendix VI.

The carbamates used were carbofuran and carbaryl. Since the sensitivity of the electrolytic conductivity detector varied, ethyl parathion was added to serve as an internal standard. The amount of each pesticide placed on the generator was 20 μg of carbofuran, 40 μg of carbaryl, and 40 μg of ethyl parathion. Vaporization of the carbamates and ethyl parathion was 90-100% complete.

The collection efficiencies of both carbofuran and carbaryl were very poor for all test sorbents. Collection of ethyl parathion was good for all test sorbents, which indicated satisfactory detector and sampler performance. Recoveries of the carbamates when placed directly on the test sorbent were good, suggesting essentially no loss on extraction; therefore, the indicated low collection efficiencies were assumed to be real.

g. Substitute Pesticides

There was insufficient time to evaluate all the substitute pesticides suggested by the Project Officer. Average collection efficiency data for those which were evaluated are summarized in Table 10. A chromatogram of the substitute pesticides standard is shown in Figure 12. Detailed data sheets for each test of the series are contained in Appendix VII.

The substitute pesticides used were CIPC, trifluralin, atrazine, and Lasso. The amounts of each placed on the vapor generator were: CIPC 100 μg, trifluralin 0.60 μg, atrazine 40.0 μg and Lasso 2.00 μg. Atrazine vaporized only to the extent of about 50%, while the other compounds were essentially quantitatively vaporized.

The collection of all the substitute pesticides evaluated was good on Tenax GC and Chromosorb 102. Trifluralin was poorly trapped by polyurethane foam, although collection efficiency was good for other substitute pesticides.

TABLE 9. CARBAMATE PESTICIDES

Test	Sorbent	Temperature °C Max.	Min.	Sampling Rate l/min	% Collected Carbofuran	Carbaryl	Et Parathion
102A	Poly U	32	20	240	20	15	98
102B	Poly U	32	20	240	21	14	86
103A	Chromo 102	35	17	240	5	6	78
103B	Chromo 102	35	17	240	9	18	92
104A	Tenax GC	32	15	240	8	3	77
104B	Tenax GC	32	15	240	12	7	85

FIGURE 11. GAS CHROMATOGRAM OF CARBAMATE STANDARD

10% UC-W98 at 160°C (SS, 1/8" x 50-cm)
Detector: Hall Electrolytic Conductivity, Reductive Mode, 800°C.

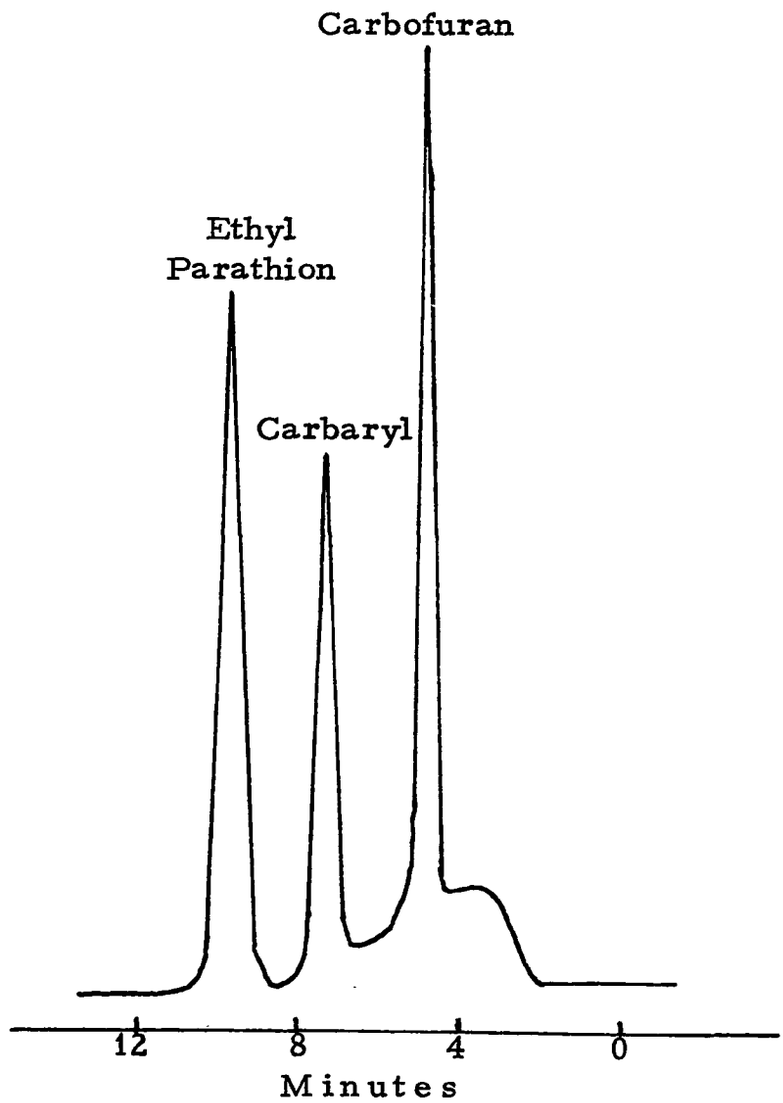

TABLE 10. SUBSTITUTE PESTICIDES

Test	Sorbent	Temperature °C Max.	Min.	Sampling Rate l/min	% Collected CIPC	Trifluralin	Atrazine	Lasso
105A	Poly U	24	21	240	86	22	88	--
107A	Poly U	26	19	240	92	8	104	108
105B	Chromo 102	24	21	240	93	88	81	100
107B	Chromo 102	26	19	240	89	85	107	99
106A	Tenax GC	24	21	240	94	92	80	109
106B	Tenax GC	24	21	240	87	93	93	104

FIGURE 12. GAS CHROMATOGRAM OF SUBSTITUTE PESTICIDES STANDARD

10% UC-W98 (SS 55-1/8" x 50-cm)
Temperature programmed from 150° to 170°C at 40°C/min. Electron Capture Detector, Ni-63, Pulsed Mode.

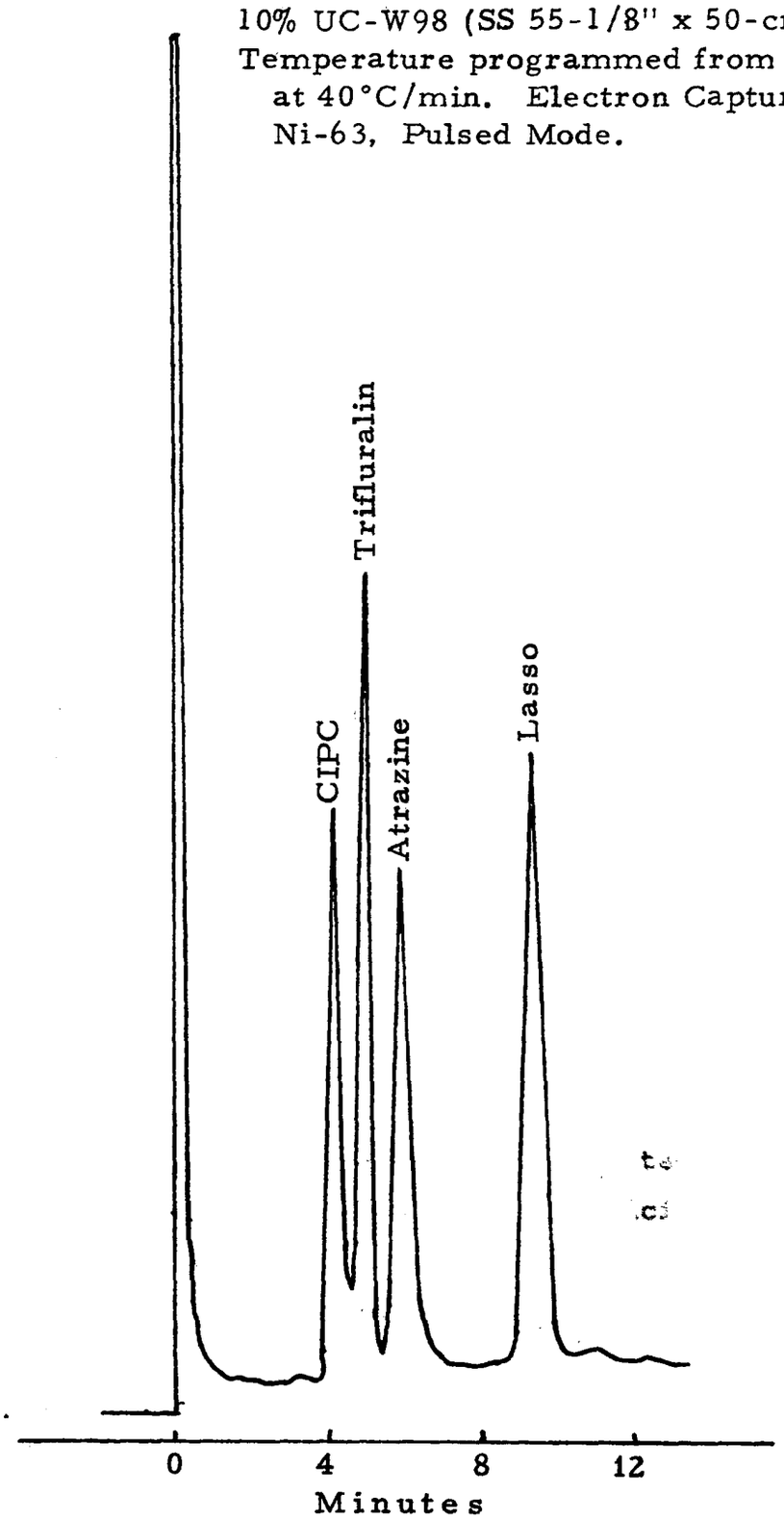

C. Field Testing

1. Ambient Air Sampling

Two samplers equipped with SwRI sampling modules were used for this outdoor study. The sampling procedure was essentially the same as that previously stated, except that there was no pesticide generation and charcoal was not normally used as a pre-filter. The glass fiber particulate filter was employed, however. The running time was shortened to 22 hours to allow for turn-around time from one day's sampling to another. The sampling rate was always 240 liters per minute regardless of the sorbent being used. Each sampling day two different sorbents were evaluated. On one day (R-115) only, one of two samplers in which Tenax GC was being used was provided with a charcoal pre-filter in addition to the glass fiber filter. Figure 13 shows the two chromatograms obtained from these two samples; that is, they represent ambient air vs charcoal-cleaned air. In one test (R-113, Tenax + S), the pesticides listed were generated at the 2.0 ng/m^3 level. The results of this test are presented in Table 11 along with those from an unspiked ambient air sample (R-113, Tenax) collected simultaneously.

Table 12 lists the pertinent sample and climatological data for the field tests made during the last month of the program. Apparent air concentrations of six organochlorine pesticides are also listed. These analyses were by electron capture gas chromatography, with no attempt to confirm results. No particular problems were encountered during the field test phase of the program.

2. Sample Preparation and Chromatography

Extraction and concentration of ambient air samples were carried out in the same manner as for the sorbent comparison testing. In addition, a simple alumina cleanup was used to remove non-pesticidal residues. The approximately 10-ml sample from the Kuderna-Danish Evaporator was further concentrated to about 3 ml under a gentle stream of nitrogen.

FIGURE 13. GAS CHROMATOGRAM OF MATERIAL COLLECTED FROM AMBIENT AIR VS. CHARCOAL-FILTERED AIR

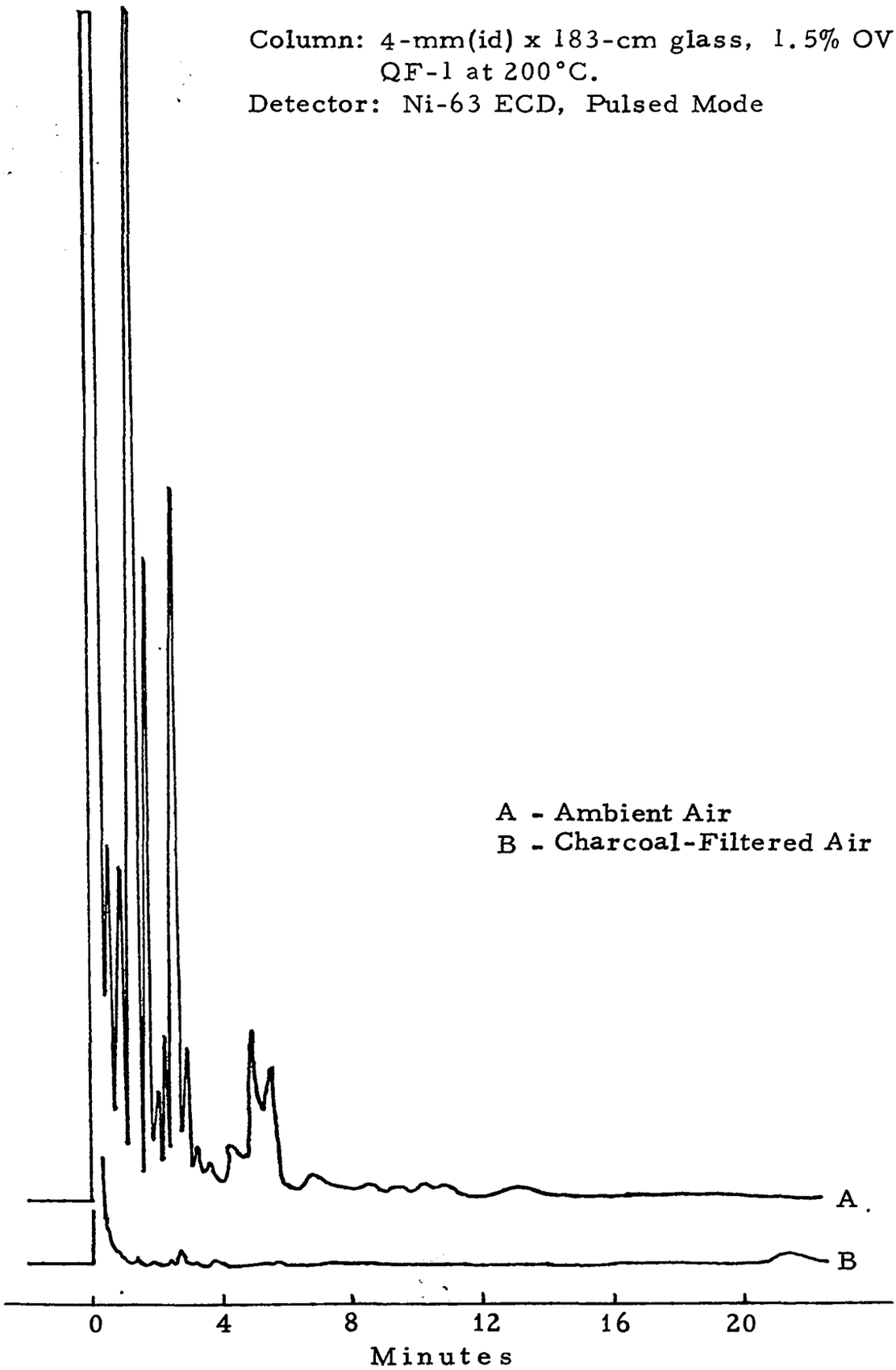

TABLE 11. FIELD TEST OF TENAX GC WITH AND WITHOUT GENERATED PESTICIDES

GC Retention Time (min)	Pesticide	Ambient Air Level (ppt)	Measured Air Level With Pesticides Introduced at 2 ppt (ppt)
1.86	α-BHC	3.91	5.45
2.33	Lindane	0.84	2.48
3.47	Aldrin	0.89	1.84
7.27	p,p'-DDE	0.35	2.28
13.25	p,p'-DDT	0.29	2.44
20.02	Mirex	0.03	1.93

TABLE 12. AMBIENT AIR SAMPLES

Test #	Date Taken (start)	Sorbent	Temp. °C Max	Temp. °C Min	Humidity % Start	Humidity % Finish	α-BHC (ng/m³)	Lindane (ng/m³)	Aldrin (ng/m³)	p,p'-DDE (ng/m³)	p,p'-DDT (ng/m³)	Mirex (ng/m³)
108A	5-24-77	Tenax	34	19	71	99	1.30	0.29	0.03	0.32	0.25	0.02
108B	5-24-77	Chromosorb 102	34	19	71	99	1.26	0.26	ND	0.35	0.26	0.02
109A	5-25-77	Polyurethane	34	21	97	97	0.74	2.08	0.06	0.50	0.26	0.02
109B	5-25-77	Chromosorb 102	34	21	97	97	1.23	2.41	0.03	0.57	0.28	0.03
110A	5-26-77	Polyurethane	35	20	80	94	0.89	0.46	0.06	0.52	0.29	0.03
110B	5-26-77	Tenax	35	20	80	94	1.26	0.53	0.02	0.59	0.30	0.04
111A	5-30-77	Tenax	36	22	95	100	1.86	1.08	0.02	0.49	0.32	ND
111B	5-30-77	Chromosorb 102	36	22	95	100	2.09	1.18	0.02	0.65	0.38	ND
112A	5-31-77	Polyurethane	39	18	100	91	1.84	0.79	0.12	0.33	0.32	0.03
113A	6-1-77	Tenax	38	19	80	99	3.91	0.84	0.89	0.35	0.29	0.03
113B	6-1-77	Tenax + S	38	19	80	99	*5.45	2.48	1.84	2.28	2.44	1.93
114A	6-2-77	Chromosorb 102	39	20	80	90	3.02	1.06	0.16	0.39	0.26	0.03
114B	6-2-77	Polyurethane	39	20	80	90	2.21	1.23	0.26	0.52	0.39	0.06
115A	6-6-77	Tenax(charcoal)	39	19	94	85	**0.03	0.02	0.02	ND	ND	ND
115B	6-6-77	Tenax	39	19	94	85	3.13	2.05	0.32	0.25	0.26	ND
116A	6-7-77	Polyurethane	42	18	56	75	2.65	0.84	1.97	0.06	0.34	ND
116B	6-7-77	Chromosorb 102	42	18	56	75	2.56	0.87	1.91	0.09	0.32	ND
117A	6-8-77	Chromosorb 102	40	21	66	96	3.49	1.08	0.05	0.43	0.37	ND
117B	6-8-77	Polyurethane	40	21	66	96	1.91	1.00	0.30	0.66	0.38	ND
118A	6-9-77	Tenax	38	20	65	96	2.07	0.78	0.02	0.22	0.30	ND
118B	6-9-77	Polyurethane	38	20	65	96	1.35	1.35	0.15	0.71	0.63	ND
119A	6-13-77	Tenax	40	21	61	85	1.75	0.83	ND	0.31	0.26	0.03
119B	6-13-77	Chromosorb 102	40	21	61	85	1.88	0.89	0.04	0.41	0.45	0.02
120A	6-14-77	Chromosorb 102	39	22	64	94	1.92	0.66	0.12	0.30	0.28	ND
120B	6-14-77	Polyurethane	39	22	64	94	1.39	0.77	0.14	0.44	0.37	ND
121A	6-15-77	Polyurethane	39	23	64	94	0.75	0.84	0.29	0.68	0.40	ND
121B	6-15-77	Tenax	39	23	64	94	1.66	1.47	0.02	0.58	0.45	ND
122A	6-16-77	Tenax	38	23	73	94	0.86	0.89	0.09	0.60	0.28	ND
122B	6-16-77	Chromosorb 102	38	23	73	94	0.96	1.14	0.04	0.78	0.31	ND
123A	6-20-77	Chromosorb 102	37	25	82	95	0.81	0.61	ND	0.48	0.43	ND
123B	6-20-77	Polyurethane	37	25	82	95	0.43	0.62	0.08	0.57	0.51	ND
124A	6-21-77	Tenax	36	22	78	95	0.86	0.89	0.03	0.59	0.39	ND
124B	6-21-77	Polyurethane	36	22	78	95	0.58	0.75	0.05	0.67	0.47	ND
125A	6-22-77	Chromosorb 102	36	21	85	100	1.32	0.89	0.02	0.67	0.50	ND
125B	6-22-77	Tenax	36	21	85	100	1.27	0.81	ND	0.68	0.40	ND
126A	6-23-77	Chromosorb 102	29	21	100	100	1.38	0.30	ND	0.55	0.51	ND
126B	6-23-77	Polyurethane	29	21	100	100	0.80	0.29	0.08	0.46	0.51	ND

* +2 ng/m³ (2 ppt) spike
** Charcoal-filtered air

The concentrate was then cleaned up by the method of Bidleman and Olney*. The sample was again made up to 10 ml for injection onto the chromatographic column. The samples were analyzed on a 4-mm I.D. x 182-cm column of 1.5% OV-17/1.95% QF-1 at 200°C using an electron capture detector.

3. Field Study Data

A newly installed Hewlett-Packard 3354A Laboratory Data System was available for this last stage of the program. A method was prepared using the chlorinated pesticide standard for calibration purposes. All unnamed peaks in the program were assigned the same response factor as aldrin; that is, the data contained in the column labeled PPT (parts-per-trillion) on the computer print-out (Appendix VIII) was based on the assumption that the electron capture detector has the same sensitivity to all unnamed peaks as it does to aldrin. If a peak occurred within a time bracket assigned to a certain pesticide, that peak was labeled as being the assigned pesticide. Proof of identity was beyond the scope of work of this program.

No extensive evaluation of the field test will be attempted. It will suffice to say at this time that the chlorinated pesticides can readily be detected at the 1 ng/m^3 level. The bulk of the field tests indicate possible airborne pesticides at the low-to-fractional ng/m^3 level. All of the print-out sheets from the field test study are included in Appendix VIII of this report.

---

* Bidleman, T. F. and Olney, C. E., Bull. Environ. Contam. and Toxicol., 11, 442-450, 1974.

APPENDIX I

CHLORINATED PESTICIDES - COLLECTION EFFICIENCY DATA

R-68

Sorbent Polyurethane foam

Sampler No. 6

Filter GF + C *

Start:

Finish:

Date 1/25/77

Date 1/26/77

Flow 280 ℓ/min.

Flow 280 ℓ/min.

Time 8:45 A.M.

Time 8:45 A.M.

Temp. 27 °C Max. 31°C Min. 25°C

Temp 29 °C

Press. 749 mm

Press. 744 mm

Humidity 30 %

Humidity 34 %

Pesticide	Amount Put on Generator µg	Residue on Generator µg	Amount Generated µg	Amount Recovered µg	% Recovery
Chlorinated					
α-BHC	1.00	0.0	1.00	0.44	44
Lindane	1.00	0.0	1.00	--	--
Aldrin	1.00	0.0	1.00	0.66	66
DDE	1.00	0.0	1.0	0.92	92
Mirex	1.00	0.18	0.82	0.68	83

*GF + C = Glass Fiber + Charcoal

R- 69				Sorbent	Chromosorb 102		
Sampler No.	6			Filter	GF + C		
Start:				Finish:			
Date	1/26/77			Date	1/27/77		
Flow	260	ℓ/min.		Flow	255	ℓ/min.	
Time	9:15	A.M.		Time	9:15	A.M.	
Temp.	29	°C	Max. 31 °C Min. 26°C	Temp	30	°C	
Press.	743	mm		Press.	738	mm	
Humidity	34	%		Humidity		%	

Pesticide	Amount Put on Generator µg	Residue on Generator µg	Amount Generated µg	Amount Recovered µg	% Recovery
Chlorinated					
α-BHC	1.00	0.0	1.00	0.97	97
Lindane	1.00	0.0	1.00	0.88	88
Aldrin	1.00	0.0	1.00	0.83	83
DDE	1.00	0.0	1.00	0.91	91
DDT	1.00	0.0	1.00	0.90	90
Mirex	1.00	0.10	0.90	0.78	87

R- 70					Sorbent	Tenax	
Sampler No. 6					Filter	GF + C	
Start:					Finish:		
Date	1/27/77				Date	1/28/77	
Flow	250	ℓ/min.			Flow	240	ℓ/min.
Time	9: 30	A.M.			Time	9: 30	A.M.
Temp.	29	°C	Max. 32 °C	Min. 28°C	Temp	32	°C
Press.	738	mm			Press.	738	mm
Humidity	37	%			Humidity	34	%

Pesticide	Amount Put on Generator µg	Residue on Generator µg	Amount Generated µg	Amount Recovered µg	% Recovery
Chlorinated					
α-BHC	1.00	0.0	1.00	0.84	84
Lindane	1.00	0.0	1.00	0.84	84
Aldrin	1.00	0.0	1.00	0.85	85
DDE	1.00	0.0	1.00	0.89	89
DDT	1.00	0.0	1.00	0.88	88
Mirex	1.00	0.04	0.96	0.84	88

R- 81A				Sorbent	Polyurethane Foam		
Sampler No.	6			Filter	GF + C		
Start:				Finish:			
Date	2/28/77			Date	3/1/77		
Flow	280	ℓ/min.		Flow	275	ℓ/min.	
Time	2:00	A.M.		Time	1:00	A.M.	
Temp.	28	°C	Max. 30°C Min. 25°C	Temp	29	°C	
Press.	749	mm		Press.	747	mm	
Humidity	26	%		Humidity	35	%	

Pesticide	Amount Put on Generator µg	Residue on Generator µg	Amount Generated µg	Amount Recovered µg	% Recovery
Chlorinated					
α-BHC	1.00	0.00	1.00	0.25	25
Lindane	1.00	0.00	1.00	0.86	86
Aldrin	1.00	0.00	1.00	0.27	27
DDE	1.00	0.00	1.00	1.03	103
DDT	1.00	0.00	1.00	1.02	102
Mirex	1.00	0.00	1.00	1.05	105

R- 81B				Sorbent	Polyurethane Foam		
Sampler No.	4			Filter	GF + C		
Start:				Finish:			
Date	2/28/77			Date	3/1/77		
Flow	280	ℓ/min.		Flow	280	ℓ/min.	
Time	2:00	A.M.		Time	1:00	A.M.	
Temp.	28	°C	Max. 30°C Min. 25°C	Temp	29	°C	
Press.	749	mm		Press.	747	mm	
Humidity	26	%		Humidity	35	%	

Pesticide	Amount Put on Generator µg	Residue on Generator µg	Amount Generated µg	Amount Recovered µg	% Recovery
Chlorinated					
α-BHC	1.00	0.0	1.00	0.25	25
Lindane	1.00	0.0	1.00	0.89	89
Aldrin	1.00	0.0	1.00	0.34	34
DDE	1.00	0.0	1.00	--	-
DDT	1.00	0.0	1.00	1.00	100
Mirex	1.00	0.0	1.00	1.00	100

APPENDIX II

SYNTHETIC PCB MIXTURE - COLLECTION EFFICIENCY DATA

R- 74					Sorbent	Tenax	
Sampler No.	6				Filter	GF + C	
Start:					Finish:		
Date	2/9/77				Date	2/10/77	
Flow	255	ℓ/min.			Flow	250	ℓ/min.
Time	8:30	A.M.			Time	8:30	A.M.
Temp.	26	°C	Max. 28°C	Min. 25°C	Temp	26	°C
Press.	751	mm			Press.	748	mm
Humidity	34	%			Humidity	42	%

Pesticide	Amount Put on Generator µg	Residue on Generator µg	Amount Generated µg	Amount Recovered µg	% Recovery
Mixed PCB					
B_3	1.00	0.0	1.00	1.07	107
B_4	1.00	0.0	1.00	1.24	124
B_6	1.00	0.0	1.00	0.97	97
B_5	1.00	0.0	1.00	1.03	103
B_7	1.00	0.0	1.00	0.94	94

R- 75				Sorbent	Chromosorb 102	
Sampler No. 6				Filter	GF + C	
Start:				Finish:		
Date	2/10/77			Date	2/11/77	
Flow	255	ℓ/min.		Flow	250	ℓ/min.
Time	9: 10	A.M.		Time	9: 10	A.M.
Temp.	27	°C	Max. 29 °C Min. 27 °C	Temp	27	°C
Press.	748	mm		Press.	743	mm
Humidity	42	%		Humidity	50	%

Pesticide	Amount Put on Generator μg	Residue on Generator μg	Amount Generated μg	Amount Recovered μg	% Recovery
Mixed PCB					
B_3	1.00	0.0	1.00	1.08	108
B_4	1.00	0.0	1.00	1.21	121
B_6	1.00	0.0	1.00	1.02	102
B_5	1.00	0.0	1.00	1.09	109
B_7	1.00	0.0	1.00	1.06	106

R- 76					Sorbent	Polyurethane Foam	
Sampler No.	6				Filter	GF + C	
Start:					Finish:		
Date	2/11/77				Date	2/12/77	
Flow	280	ℓ/min.			Flow	280	ℓ/min.
Time	9:25	A.M.			Time	9:25	A.M.
Temp.	27	°C	Max. 30°C	Min. 25°C	Temp	28	°C
Press.	743	mm			Press.	746	mm
Humidity	50	%			Humidity	40	%

Pesticide	Amount Put on Generator μg	Residue on Generator μg	Amount Generated μg	Amount Recovered μg	% Recovery
Mixed PCB					
B_3	1.00	0.0	1.00	0.30	30
B_4	1.00	0.0	1.00	0.90	90
B_6	1.00	0.0	1.00	0.99	99
B_5	1.00	0.0	1.00	1.03	103
B_7	1.00	0.0	1.00	0.96	96

APPENDIX IV

AROCLOR 1254 - COLLECTION EFFICIENCY DATA

R- 71					Sorbent	Chromosorb 102	
Sampler No.	6				Filter	GF + C	
Start:					Finish:		
Date	2/1/77				Date	2/2/77	
Flow	262	ℓ/min.			Flow	258	ℓ/min.
Time	8:40	A.M.			Time	8:30	A.M.
Temp.	28	°C	Max. 32 °C	Min. 27 °C	Temp	29	°C
Press.	751	mm			Press.	745	mm
Humidity	32	%			Humidity	35	%

Pesticide	Amount Put on Generator µg	Residue on Generator µg	Amount Generated µg	Amount Recovered µg	% Recovery
Arodor 1254					
1	10.0	0.0	10.0	18.0	180
2	10.0	0.0	10.0	10.5	105
3	10.0	0.0	10.0	11.5	115
4	10.0	0.0	10.0	9.9	99
5	10.0	0.0	10.0	9.4	94
6	10.0	0.0	10.0	9.6	96
7	10.0	0.0	10.0	10.0	100

R- 78				Sorbent	Chromosorb 102		
Sampler No. 6				Filter	GF + C		
Start:				Finish:			
Date	2/17/77			Date	2/18/77		
Flow	255	ℓ/min.		Flow	250	ℓ/min.	
Time	8:45	A.M.		Time	8:45	A.M.	
Temp.	26	°C	Max. 30°C Min. 25°C	Temp	27	°C	
Press.	749	mm		Press.	745	mm	
Humidity	33	%		Humidity	40	%	

Pesticide	Amount Put on Generator µg	Residue on Generator µg	Amount Generated µg	Amount Recovered µg	% Recovery
Aroclor 1016					
A	10.0	0.0	10.0	10.7	107
B	10.0	0.0	10.0	10.0	100
C	10.0	0.0	10.0	9.9	99
D	10.0	0.0	10.0	10.0	100
E	10.0	0.0	10.0	10.0	100

R- 80				Sorbent	Tenax		
Sampler No.	6			Filter	GF + C		
Start:				Finish:			
Date	2/23/77			Date	2/24/77		
Flow	265	ℓ/min.		Flow	265	ℓ/min.	
Time	8:45	A.M.		Time	8:45	A.M.	
Temp.	28	°C	Max. 31 °C Min. 27°C	Temp	28	°C	
Press.	738	mm		Press.	741	mm	
Humidity	30	%		Humidity	25	%	

Pesticide	Amount Put on Generator μg	Residue on Generator μg	Amount Generated μg	Amount Recovered μg	% Recovery
Aroclor 1016					
A	10.0	0.0	10.0	9.9	99
B	10.0	0.0	10.0	10.4	104
C	10.0	0.0	10.0	9.9	99
D	10.0	0.0	10.0	9.4	94
E	10.0	0.0	10.0	9.8	98

APPENDIX IV

AROCLOR 1254 - COLLECTION EFFICIENCY DATA

R- 71				Sorbent	Chromosorb 102		
Sampler No.	6			Filter	GF + C		
Start:				Finish:			
Date	2/1/77			Date	2/2/77		
Flow	262	ℓ/min.		Flow	258	ℓ/min.	
Time	8:40	A.M.		Time	8:30	A.M.	
Temp.	28	°C	Max. 32°C Min. 27°C	Temp	29	°C	
Press.	751	mm		Press.	745	mm	
Humidity	32	%		Humidity	35	%	

Pesticide	Amount Put on Generator µg	Residue on Generator µg	Amount Generated µg	Amount Recovered µg	% Recovery
Arodor 1254					
1	10.0	0.0	10.0	18.0	180
2	10.0	0.0	10.0	10.5	105
3	10.0	0.0	10.0	11.5	115
4	10.0	0.0	10.0	9.9	99
5	10.0	0.0	10.0	9.4	94
6	10.0	0.0	10.0	9.6	96
7	10.0	0.0	10.0	10.0	100

R-	72			Sorbent	Tenax		
Sampler No.	6			Filter	GF + C		
Start:				Finish:			
Date	2/2/77			Date	2/3/77		
Flow	260	ℓ/min.		Flow	255	ℓ/min.	
Time	8:50	A.M.		Time	8:50	A.M.	
Temp.	28	°C	Max. 29°C Min. 26°C	Temp	27	°C	
Press.	745	mm		Press.	744	mm	
Humidity	35	%		Humidity	40	%	

Pesticide	Amount Put on Generator µg	Residue on Generator µg	Amount Generated µg	Amount Recovered µg	% Recovery
Aroclor 1254					
1	10.0	0.0	10.0	15.9	159
2	10.0	0.0	10.0	11.1	111
3	10.0	0.0	10.0	12.7	127
4	10.0	0.0	10.0	11.1	111
5	10.0	0.0	10.0	10.2	102
6	10.0	0.0	10.0	10.0	100
7	10.0	0.0	10.0	10.1	101

R- 73

Sampler No. 6

Start:

Date 2/3/77

Flow 280 ℓ/min.

Time 9:05 A.M.

Temp. 27 °C Max. 31 °C Min. 21 °C

Press. 744 mm

Humidity 40 %

Sorbent Polyurethane Foam

Filter GF + C

Finish:

Date 2/4/77

Flow 280 ℓ/min.

Time 9:05 A.M.

Temp 22 °C

Press. 748 mm

Humidity 32 %

Pesticide	Amount Put on Generator µg	Residue on Generator µg	Amount Generated µg	Amount Recovered µg	% Recovery
Aroclor 1254					
1	10.0	0.0	10.0	15.1	151
2	10.0	0.0	10.0	10.5	105
3	10.0	0.0	10.0	12.0	120
4	10.0	0.0	10.0	12.0	120
5	10.0	0.40	9.6	9.6	100
6	10.0	0.70	9.3	9.5	102
7	10.0	1.00	9.0	9.0	100

APPENDIX V

ORGANOPHOSPHATE PESTICIDES - COLLECTION EFFICIENCY DATA

R- 96A				Sorbent	Chromosorb 102		
Sampler No.	6			Filter	GF + C		
Start:				Finish:			
Date	4/12/77			Date	4/13/77		
Flow	240	ℓ/min.		Flow	240	ℓ/min.	
Time	9:20	A.M.		Time	8:20	A.M.	
Temp.	24	°C	Max. 26°C Min. 18°C	Temp	20	°C	
Press.	749	mm		Press.	748	mm	
Humidity	70	%		Humidity	97	%	

Pesticide	Amount Put on Generator µg	Residue on Generator µg	Amount Generated µg	Amount Recovered µg	% Recovery
Phosphates					
Mevinphos	10.0	0.0	10.0	9.2	92
Diazinon	3.0	0.0	3.0	2.8	94
Me Parathion	1.00	0.0	1.00	0.95	95

R- 96B

Sorbent Chromosorb 102

Sampler No. 4

Filter GF + C

Start:					Finish:		
Date	4/12/77				Date	4/13/77	
Flow	240	ℓ/min.			Flow	240	ℓ/min.
Time	9:20	A.M.			Time	8:20	A.M.
Temp.	24	°C	Max. 26°C	Min. 18°C	Temp	20	°C
Press.	749	mm			Press.	748	mm
Humidity	70	%			Humidity	97	%

Pesticide	Amount Put on Generator µg	Residue on Generator µg	Amount Generated µg	Amount Recovered µg	% Recovery
Phosphates					
Mevinphos	10.0	0.0	10.0	9.4	94
Diazinon	3.0	0.0	3.0	2.8	94
Me Parathion	1.00	0.0	1.00	0.89	89

R- 97A

Sorbent Polyurethane Foam

Sampler No. 6

Filter GF + C

Start:					Finish:		
Date	4/13/77				Date	4/14/77	
Flow	280	ℓ/min.			Flow	280	ℓ/min.
Time	9:40	A.M.			Time	8:40	A.M.
Temp.	22	°C	Max. 27°C	Min. 17°C	Temp	20	°C
Press.	748	mm			Press.	742	mm
Humidity	97	%			Humidity	99	%

Pesticide	Amount Put on Generator µg	Residue on Generator µg	Amount Generated µg	Amount Recovered µg	% Recovery
Phosphates					
Mevinphos	10.0	0.0	10.0	9.2	92
Diazinon	3.0	0.0	3.0	3.1	103
Me Parathion	1.00	0.0	1.00	0.95	95

R- 96B

Sorbent Chromosorb 102

Sampler No. 4

Filter GF + C

Start:					Finish:		
Date	4/12/77				Date	4/13/77	
Flow	240	ℓ/min.			Flow	240	ℓ/min.
Time	9:20	A.M.			Time	8:20	A.M.
Temp.	24	°C	Max. 26°C	Min. 18°C	Temp	20	°C
Press.	749	mm			Press.	748	mm
Humidity	70	%			Humidity	97	%

Pesticide	Amount Put on Generator µg	Residue on Generator µg	Amount Generated µg	Amount Recovered µg	% Recovery
Phosphates					
Mevinphos	10.0	0.0	10.0	9.4	94
Diazinon	3.0	0.0	3.0	2.8	94
Me Parathion	1.00	0.0	1.00	0.89	89

R- 97A

Sorbent Polyurethane Foam

Sampler No. 6

Filter GF + C

Start:

Finish:

Date	4/13/77				Date	4/14/77	
Flow	280	ℓ/min.			Flow	280	ℓ/min.
Time	9:40	A.M.			Time	8:40	A.M.
Temp.	22	°C	Max. 27°C	Min. 17°C	Temp	20	°C
Press.	748	mm			Press.	742	mm
Humidity	97	%			Humidity	99	%

Pesticide	Amount Put on Generator µg	Residue on Generator µg	Amount Generated µg	Amount Recovered µg	% Recovery
Phosphates					
Mevinphos	10.0	0.0	10.0	9.2	92
Diazinon	3.0	0.0	3.0	3.1	103
Me Parathion	1.00	0.0	1.00	0.95	95

R- 97B				Sorbent	Polyurethane Foam		
Sampler No.	4			Filter	GF + C		
Start:				Finish:			
Date	4/13/77			Date	4/14/77		
Flow	280	ℓ/min.		Flow	280	ℓ/min.	
Time	9:40	A.M.		Time	8:40	A.M.	
Temp.	22	°C	Max. 27°C Min. 17°C	Temp	20	°C	
Press.	748	mm		Press.	742	mm	
Humidity	97	%		Humidity	99	%	

Pesticide	Amount Put on Generator µg	Residue on Generator µg	Amount Generated µg	Amount Recovered µg	% Recovery
Phosphates					
Mevinphos	10.0	0.0	10.0	9.8	98
Diazinon	3.0	0.0	3.0	3.2	107
Me Parathion	1.00	0.0	1.00	0.96	96

R- 98A				Sorbent	Tenax		
Sampler No. 6				Filter	GF + C		
Start:				Finish:			
Date	4/14/77			Date	4/15/77		
Flow	240	ℓ/min.		Flow	240	ℓ/min.	
Time	9:25	A.M.		Time	9:45	A.M.	
Temp.	20	°C	Max. 27 °C Min. 18 °C	Temp	20	°C	
Press.	742	mm		Press.	740	mm	
Humidity	98	%		Humidity	100	%	

Pesticide	Amount Put on Generator µg	Residue on Generator µg	Amount Generated µg	Amount Recovered µg	% Recovery
Phosphates					
Mevinphos	10.0	0.0	10.0	10.8	108
Diazinon	3.0	0.0	3.0	2.9	96
Me Parathion	1.00	0.0	1.00	0.97	97

R- 98B

Sampler No. 4

Start:

Date 4/14/77

Flow 240 ℓ/min.

Time 9:25 A.M.

Temp. 20 °C Max. 27°C Min. 18°C

Press. 742 mm

Humidity 98 %

Sorbent Tenax

Filter GF + C

Finish:

Date 4/15/77

Flow 240 ℓ/min.

Time 9:45 A.M.

Temp 20 °C

Press. 740 mm

Humidity 100 %

Pesticide	Amount Put on Generator µg	Residue on Generator µg	Amount Generated µg	Amount Recovered µg	% Recovery
Phosphates					
Mevinphos	10.0	0.0	10.0	10.2	102
Diazinon	3.0	0.0	3.0	2.7	91
Me Parathion	1.00	0.0	1.00	0.97	97

APPENDIX VI

CARBAMATE PESTICIDES - COLLECTION EFFICIENCY DATA

R- 102A

Sorbent Polyurethane Foam

Sampler No. 6

Filter GF + C

Start:					Finish:		
Date	5/3/77				Date	5/4/77	
Flow	240	ℓ/min.			Flow	240	ℓ/min.
Time	9:55	A.M.			Time	9:00	A.M.
Temp.	24	°C	Max. 32°C	Min. 20°C	Temp	24	°C
Press.	744	mm			Press.	742	mm
Humidity	92	%			Humidity	95	%

Pesticide	Amount Put on Generator µg	Residue on Generator µg	Amount Generated µg	Amount Recovered µg	% Recovery
Carbamates					
Carbofuran	20.00	0.6	19.4	3.9	20
Carbaryl	40.00	2.5	37.5	5.8	15
Et Parathion	40.00	0.0	40.0	39.2	98

R-102B

Sampler No. 4

Start:

Date	5/3/77	
Flow	240	ℓ/min.
Time	9:55	A.M.
Temp.	22	°C
Press.	744	mm
Humidity	92	%

Sorbent Polyurethane Foam

Filter GF + C

Finish:

Date	5/4/77	
Flow	240	ℓ/min.
Time	9:00	A.M.
Temp	24	°C
Press.	742	mm
Humidity	95	%

Max. °C Min. °C

Pesticide	Amount Put on Generator µg	Residue on Generator µg	Amount Generated µg	Amount Recovered µg	% Recovery
Carbamates					
Carbofuran	20.0	1.3	18.7	3.9	21
Carbaryl	40.0	5.4	34.6	5	14
Et Parathion	40.0	0.8	39.2	33.7	86

R- 103A

Sampler No. 6

Start:

Date	5/10/77	
Flow	240	ℓ/min.
Time	11:00	A.M.
Temp.	31	°C
Press.	740	mm
Humidity	65	%

Sorbent Chromosorb 102

Filter GF + C

Finish:

Date	5/11/77	
Flow	240	ℓ/min.
Time	9:30	A.M.
Temp	21	°C
Press.	740	mm
Humidity	93	%

Max. 35°C Min. 17 °C

Pesticide	Amount Put on Generator µg	Residue on Generator µg	Amount Generated µg	Amount Recovered µg	% Recovery
Carbamates					
Carbofuran	20.0	0.0	20.0	0.9	5
Carbaryl	40.0	0.0	40.0	2.2	6
Et Parathion	40.0	0.0	40.0	31.0	78

R- 103B				Sorbent	Chromosorb 102		
Sampler No.	4			Filter	GF + C		
Start:				Finish:			
Date	5/10/77			Date	5/11/77		
Flow	240	ℓ/min.		Flow	240	ℓ/min.	
Time	11:00	A.M.		Time	9:30	A.M.	
Temp.	31	°C	Max. 35 °C Min. 17 °C	Temp	21	°C	
Press.	740	mm		Press.	740	mm	
Humidity	65	%		Humidity	93	%	

Pesticide	Amount Put on Generator µg	Residue on Generator µg	Amount Generated µg	Amount Recovered µg	% Recovery
Carbamates					
Carbofuran	20.0	0.0	20.0	1.8	9
Carbaryl	40.0	0.0	40.0	7.2	18
Et Parathion	40.0	0.0	40.0	36.8	92

R- 104A				Sorbent	Tenax		
Sampler No.	6			Filter	GF + C		
Start:				Finish:			
Date	5/11/77			Date	5/12/77		
Flow	229	ℓ/min.		Flow	--	ℓ/min.	
Time	10:00	A.M.		Time	8:20	A.M.	
Temp.	21	°C	Max. 32 °C / Min. 15 °C	Temp	20	°C	
Press.	742	mm		Press.	747	mm	
Humidity	91	%		Humidity	81	%	

Pesticide	Amount Put on Generator µg	Residue on Generator µg	Amount Generated µg	Amount Recovered µg	% Recovery
Carbamates					
Carbofuran	20.0	0.4	19.6	1.6	8
Carbaryl	40.0	2.4	37.6	1.2	3
Et Parathion	40.0	0.8	39.2	30	77

R-104B					Sorbent	Tenax	
Sampler No.	4				Filter	GF + C	
Start:	,				Finish:		
Date	2/11/77				Date	5/12/77	
Flow	229	ℓ/min.			Flow	--	ℓ/min.
Time	10:00	A.M.			Time	8:20	A.M.
Temp.	21	°C	Max. 32°C	Min. 15°C	Temp	20	°C
Press.	742	mm			Press.	747	mm
Humidity	91	%			Humidity	81	%

Pesticide	Amount Put on Generator µg	Residue on Generator µg	Amount Generated µg	Amount Recovered µg	% Recovery
Carbamates					
Carbofuran	20.0	0.3	19.7	2.4	12
Carbaryl	40.0	0.4	39.6	2.7	7
Et Parathion	40.0	0.9	39.1	33.4	85

APPENDIX VII

SUBSTITUTE PESTICIDES - COLLECTION EFFICIENCY DATA

R- 105A					Sorbent	Polyurethane Foam	
Sampler No.	6				Filter	GF + C	
Start:	,				Finish:		
Date	5/16/77				Date	5/17/77	
Flow	280	ℓ/min.			Flow	280	ℓ/min.
Time	10:00	A.M.			Time	9:00	A.M.
Temp.	22	°C	Max. 24°C	Min. 21°C	Temp	22	°C
Press.	743	mm			Press.	743	mm
Humidity	100	%			Humidity	97	%

Pesticide	Amount Put on Generator µg	Residue on Generator µg	Amount Generated µg	Amount Recovered µg	% Recovery
New Pesticides					
CIPC	100	0.0	100	86	86
Trifluralin	0.60	0.0	0.60	0.13	22
Atrazine	40.0	19.5	20.5	18.0	88
Lasso	2.00	0.20	1.80	--	--

R- 105B				Sorbent	Chromosorb 102		
Sampler No.	4			Filter	GF + C		
Start:				Finish:			
Date	5/16/77			Date	5/17/77		
Flow	280	ℓ/min.		Flow	280	ℓ/min.	
Time	10:00	A.M.		Time	9:00	A.M.	
			Max. Min.				
Temp.	22	°C	24°C 21°C	Temp	22	°C	
Press.	743	mm		Press.	743	mm	
Humidity	100	%		Humidity	97	%	

Pesticide	Amount Put on Generator µg	Residue on Generator µg	Amount Generated µg	Amount Recovered µg	% Recovery
New Pesticides					
CIPC	100	0.0	100	92.6	93
Trifluralin	0.60	0.0	0.60	0.53	88
Atrazine	40.0	24.0	16.0	13.0	81
Lasso	2.00	0.24	1.76	1.76	100

R- 106A					Sorbent	Tenax	
Sampler No.	6				Filter	GF + C	
Start:					Finish:		
Date	5/17/77				Date	5/18/77	
Flow	255	ℓ/min.			Flow	255	ℓ/min.
Time	9:35	A.M.			Time	8:35	A.M.
Temp.	24	°C	Max. 24°C	Min. 21°C	Temp		°C
Press.	743	mm			Press.	743	mm
Humidity	96	%			Humidity	97	%

Pesticide	Amount Put on Generator µg	Residue on Generator µg	Amount Generated µg	Amount Recovered µg	% Recovery
New Pesticides					
CIPC	100	1.7	98.3	92.0	94
Trifluralin	0.60	0.0	0.60	0.55	92
Atrazine	40.0	18.6	21.4	17.1	80
Lasso	2.00	0.35	1.65	1.8	109

R- 106B					Sorbent	Tenax	
Sampler No. 4					Filter	GF + C	
Start:					Finish:		
Date	5/17/77				Date	5/18/77	
Flow	255	ℓ/min.			Flow	255	ℓ/min.
Time	9: 35	A.M.			Time	8: 35	A.M.
Temp.	24	°C	Max. °C	Min. °C	Temp		°C
Press.	743	mm			Press.	743	mm
Humidity	96	%			Humidity	97	%

Pesticide	Amount Put on Generator µg	Residue on Generator µg	Amount Generated µg	Amount Recovered µg	% Recovery
New Pesticides					
CIPC	100	0.0	100	87	87
Trifluralin	0.60	0.0	0.60	0.56	93
Atrazine	40.0	21.0	19.0	17.6	93
Lasso	2.00	0.20	1.80	1.88	104

R-107A				Sorbent	Polyurethane Foam		
Sampler No.	6			Filter	GF + C		
Start:				Finish:			
Date	5/18/77			Date	5/19/77		
Flow	280	ℓ/min.		Flow	280	ℓ/min.	
Time	9:10	A.M.		Time	8:10	A.M.	
Temp.	24	°C	Max. 26°C Min. 19°C	Temp	21	°C	
Press.	743	mm		Press.	742	mm	
Humidity	97	%		Humidity	99	%	

Pesticide	Amount Put on Generator µg	Residue on Generator µg	Amount Generated µg	Amount Recovered µg	% Recovery
New Pesticides					
CIPC	100	0.0	100	92.3	92
Trifluralin	0.60	0.0	0.60	0.05	8
Atrazine	40.0	16.3	23.7	24.7	104
Lasso	2.00	0.08	1.92	2.08	108

R- 107B				Sorbent	Chromosorb 102		
Sampler No. 4				Filter	GF + C		
Start:				Finish:			
Date	5/18/77			Date	5/19/77		
Flow	255	ℓ/min.		Flow	255	ℓ/min.	
Time	9: 10	A.M.		Time	8: 10	A.M.	
Temp.	24	°C	Max. 26 °C Min. 19 °C	Temp	21	°C	
Press.	743	mm		Press.	742	mm	
Humidity	97	%		Humidity	99	%	

Pesticide	Amount Put on Generator µg	Residue on Generator µg	Amount Generated µg	Amount Recovered µg	% Recovery
New Pesticides					
CIPC	100	0.0	100	89.0	89
Trifluralin	0.60	0.0	0.60	0.51	85
Atrazine	40.0	19.3	20.7	22.2	107
Lasso	2.00	0.08	1.92	1.90	99

APPENDIX VIII

FIELD STUDY DATA - COMPUTER PRINT-OUTS

REPORT: 23.51 CHANNEL: 24 6' 1.5%OV17/1.95%QF1 200

SAMPLE: R108TENAX INJECTED AT 14:32:32 ON MAY 26, 1977

ESTD METHOD: PEST

ACTUAL RUN TIME: 25.017 MINUTES

RT	AREA		PPT	NAME
1.10	24850	TT	.522	
1.34	4796	TV	.101	
1.58	15288	VV	.321	
1.87	106901	VV	1.297	&BHC A
2.34	19583	VV	.278	&LIN
2.61	13666	VV	.287	
2.84	45014	VV	.945	
3.16	11452	VV	.241	
3.49	2162	VV	.031	&ALD
3.88	9634	VV	.202	
4.20	7843	VT	.165	
5.28	15651	TV	.329	
5.60	48161	VV	1.011	
6.11	37736	VV	.792	
7.30	24091	VV	.316	&DDE
7.94	4824	VV	.101	
10.19	6030	VV	.127	
10.81	5542	VV	.116	
13.31	13141	BV	.249	&PP DDT
20.13	1457	VB	.021	&MIREX

REPORT: 24.41 CHANNEL: 24 6' 1.5%OV17/1.95%QF1 200

SAMPLE: R108CHROMO10 INJECTED AT 15:00:56 ON MAY 26, 1977

ESTD METHOD: PEST

ACTUAL RUN TIME: 25.017 MINUTES

BL > 10 MV

RT	AREA	PPT	NAME
1.09	25779 TT	.541	
1.33	7168 TV	.151	
1.42	4861 VV	.102	
1.57	17383 VV	.365	
1.75	14887 VV	.313	
1.86	104003 VV	1.262	&BHC A
2.33	18106 VV	.257	&LIN
2.59	16112 VV	.338	
2.83	49673 VV	1.043	
3.14	8926 VV	.187	
3.86	10281 VV	.216	
4.23	7940 VV	.167	
5.26	16788 VV	.353	
5.57	51148 VV	1.074	
6.08	41187 VV	.865	
7.26	26443 VV	.347	&DDE
10.14	6368 VV	.134	
10.76	5744 VV	.121	
13.26	13880 VV	.263	&PP DDT
20.08	1579 VB	.023	&MIREX

REPORT: 2.51 CHANNEL: 24 6' 1.5%0V17/1.95%QF1 200

SAMPLE: R109POLY U INJECTED AT 10:54:32 ON JUN 1, 1977

ESTD METHOD: PEST

ACTUAL RUN TIME: 25.008 MINUTES

RT	AREA		PPT	NAME
1.05	8265	VV	.174	
1.61	58900	VV	1.237	
1.77	7844	VV	.165	
1.90	67260	VV	.740	&BHC A
2.38	160990	VV	2.082	&LIN
2.63	8007	VV	.168	
2.88	19959	VV	.419	
3.21	11609	VV	.244	
3.54	4350	VV	.057	&ALD
3.95	6932	VV	.146	
4.20	7909	VV	.166	
5.36	17398	VV	.365	
5.69	27966	VV	.587	
5.92	13016	VV	.273	
6.27	50635	VV	1.063	
7.42	41287	VV	.502	&DDE
8.07	7522	VV	.158	
9.25	5440	VV	.114	
10.36	6934	VV	.146	
10.98	5230	VV	.110	
11.65	6697	VV	.141	
13.54	14706	VV	.257	&PP DDT
20.57	1129	VB	.015	&MIREX

REPORT: 3.61 CHANNEL: 24 6' 1.5%OV17/1.95%QF1 200

SAMPLE: R109CHROM102 INJECTED AT 12:45:20 ON JUN 1, 1977

ESTD METHOD: PEST

ACTUAL RUN TIME: 25.017 MINUTES

BL > 10 MV
ENDED NOT ON BL

RT	AREA		PPT	NAME
1.05	31153	BV	.654	
1.61	68504	VV	1.439	
1.79	17753	VV	.373	
1.90	112161	VV	1.234	&BHC A
2.39	186366	VV	2.411	&LIN
2.64	13771	VV	.289	
2.89	21700	VV	.456	
3.22	10845	VV	.228	
3.55	2588	VV	.034	&ALD
3.95	7169	VV	.151	
4.33	7171	VV	.151	
5.38	16051	VV	.337	
5.70	29089	VV	.611	
5.93	12822	VV	.269	
6.26	46157	VV	.969	
7.43	46768	VV	.568	&DDE
8.05	6612	VV	.139	
9.27	5251	VV	.110	
10.37	7265	VV	.153	
10.99	5303	VV	.111	
11.66	6897	VV	.145	
13.56	16197	VV	.283	&PP DDT
20.55	2368	VB	.031	&MIREX

REPORT: 4.21 CHANNEL: 24 6' 1.5%OV17/1.95%QF1 200

SAMPLE: R110POLY U INJECTED AT 13:55:47 ON JUN 1, 1977

ESTD METHOD: PEST

ACTUAL RUN TIME: 25.000 MINUTES

ENDED NOT ON BL

RT	AREA	PPT	NAME
1.04	5662 BV	.119	
1.58	37127 VV	.780	
1.75	8712 VV	.183	
1.88	80493 VV	.886	&BHC A
2.36	35172 VV	.455	&LIN
2.62	10435 VV	.219	
2.86	29562 VV	.621	
3.18	11700 VV	.246	
3.51	4438 VV	.058	&ALD
3.92	8232 VV	.173	
4.17	9469 VV	.199	
5.32	19712 VV	.414	
5.65	32661 VV	.686	
5.87	14072 VV	.296	
6.17	43512 VV	.914	
7.36	43070 VV	.523	&DDE
8.01	8821 VV	.185	
9.18	6822 VV	.143	
10.28	7390 VV	.155	
10.90	5954 VV	.125	
11.56	7676 VV	.161	
13.42	16355 VV	.286	&PP DDT
20.34	2035 VB	.027	&MIREX

REPORT: 8.31 CHANNEL: 24 6' 1.5%OV17/1.95%QF1 200

SAMPLE: R110TENAX INJECTED AT. 15:16:12 ON JUN 1, 1977

ESTD METHOD: PEST

ACTUAL RUN TIME: 25.008 MINUTES

BL > 10 MV
ENDED NOT ON BL

RT	AREA		PPT	NAME
1.04	12765	BV	.268	
1.09	19753	VV	.415	
1.58	34723	VV	.729	
1.77	13107	VV	.275	
1.88	114188	VV	1.256	&BHC A
2.35	41021	VV	.531	&LIN
2.61	16211	VV	.340	
2.85	31628	VV	.664	
3.16	6073	VV	.128	
3.51	1640	VV	.021	&ALD
3.90	8674	VV	.182	
4.28	8388	VV	.176	
5.31	17771	VV	.373	
5.63	30374	VV	.638	
5.85	14184	VV	.298	
6.17	44593	VV	.936	
7.34	48446	VV	.589	&DDE
7.95	7150	VV	.150	
9.15	6062	VV	.127	
10.25	7432	VV	.156	
10.86	6136	VV	.129	
11.51	7527	VV	.158	
13.39	17237	VV	.301	&PP DDT
20.19	2677	VB	.035	&MIREX

REPORT: 9.21 CHANNEL: 24 6' 1.5%OV17/1.95%QF1 200

SAMPLE: R111TENAX INJECTED AT 15:47:40 ON JUN 1, 1977

ESTD METHOD: PEST

ACTUAL RUN TIME: 25.017 MINUTES

ENDED NOT ON BL

RT	AREA		PPT	NAME
1.10	45270	BV	.951	
1.42	5160	VV	.108	
1.57	58296	VV	1.224	
1.86	168677	VV	1.856	&BHC A
2.34	83766	VV	1.083	&LIN
2.61	16701	VV	.351	
2.84	43140	VV	.906	
3.14	5287	VV	.111	
3.48	1216	VV	.016	&ALD
3.89	10940	VV	.230	
4.25	7798	VV	.164	
5.28	17906	VV	.376	
5.61	52673	VV	1.106	
6.13	43506	VV	.914	
7.32	40234	VV	.489	&DDE
7.94	5690	VV	.119	
9.13	5151	VV	.108	
10.21	7777	VV	.163	
10.83	7221	VV	.152	
11.47	7751	VV	.163	
13.38	18161	VV	.318	&PP DDT
18.92	7841	VB	.165	

REPORT: 10.21 CHANNEL: 24 6' 1.5%OV17/1.95%QF1 200

SAMPLE: R111CHROM102 INJECTED AT 16:17:21 ON JUN 1, 1977

ESTD METHOD: PEST

ACTUAL RUN TIME: 25.008 MINUTES

BL > 10 MV
ENDED NOT ON BL

RT	AREA		PPT	NAME
1.11	48546	BV	1.019	
1.34	6383	VV	.134	
1.42	5999	VV	.126	
1.58	64516	VV	1.355	
1.87	189619	VV	2.086	&BHC A
2.35	91574	VV	1.184	&LIN
2.61	20733	VV	.435	
2.85	47217	VV	.992	
3.15	7482	VV	.157	
3.49	1679	VV	.022	&ALD
3.89	11440	VV	.240	
4.27	9320	VV	.196	
5.08	7535	VV	.158	
5.29	12788	VV	.269	
5.61	60017	VV	1.260	
6.13	48270	VV	1.014	
7.32	53655	VV	.652	&DDE
9.14	5828	VV	.122	
10.21	8957	VV	.188	
10.84	8260	VV	.173	
11.47	8946	VV	.188	
13.38	21858	VV	.382	&PP DDT
18.93	8338	VB	.175	

REPORT: 13.31 CHANNEL: 24 6' 1.5%OV17/1.95%QF1 200

SAMPLE: R112POLYU INJECTED AT 9:16:35 ON JUN 2, 1977

ESTD METHOD: PEST

ACTUAL RUN TIME: 25.017 MINUTES

RT	AREA		PPT	NAME
1.10	7702	VV	.162	
1.54	67957	VV	1.427	
1.89	157804	VV	1.841	&BHC A
2.36	57801	VV	.791	&LIN
2.63	30149	VV	.633	
2.87	100692	VV	2.115	
3.19	75197	VV	1.579	
3.50	8603	VV	.119	&ALD
3.66	6291	VV	.132	
3.91	24487	VV	.514	
4.26	20932	VV	.440	
5.30	40663	VV	.854	
5.63	125271	VV	2.631	
6.14	86541	VV	1.817	
7.33	25818	VV	.328	&DDE
8.00	9153	VV	.192	
9.12	6366	VV	.134	
10.21	7863	VV	.165	
10.86	12948	VV	.272	
11.50	5573	VV	.117	
13.34	17193	VV	.317	&PP DDT
20.30	2107	VB	.029	&MIREX

REPORT: 16.11 CHANNEL: 24 6' 1.5%OV17/1.95%QF1 200

SAMPLE: R113TENAX INJECTED AT 15:43:59 ON JUN 2, 1977

ESTD METHOD: PEST

ACTUAL RUN TIME: 25.008 MINUTES

BL > 10 MV

RT	AREA		PPT	NAME
1.09	34195	BV	.718	
1.20	66696	VV	1.401	
1.51	86816	VV	1.823	
1.86	323863	VV	3.910	&BHC A
2.33	59834	VV	.843	&LIN
2.59	37647	VV	.791	
2.83	110639	VV	2.323	
3.15	140904	VV	2.959	
3.47	62894	VV	.890	&ALD
3.86	24290	VV	.510	
4.25	16711	VV	.351	
5.02	15724	VV	.330	
5.25	18776	VV	.394	
5.57	119742	VV	2.515	
6.07	79454	VV	1.669	
7.27	26184	VV	.346	&DDE
10.04	7010	VV	.147	
10.78	13611	VV	.286	
11.38	5475	VV	.115	
13.25	15243	VV	.289	&PP DDT
20.02	1821	VB	.026	&MIREX

REPORT: 17.21 CHANNEL: 24 6' 1.5%OV17/1.95%QF1 200

SAMPLE: R113TENAX+S INJECTED AT 16:21:47 ON JUN 2, 1977

ESTD METHOD: PEST

ACTUAL RUN TIME: 25.008 MINUTES

BL > 10 MV

RT	AREA		PPT	NAME
1.09	49722	BV	1.044	
1.33	5597	VV	.118	
1.51	103711	VV	2.178	
1.86	451761	VV	5.453	&BHC A
2.32	175942	VV	2.478	&LIN
2.59	43059	VV	.904	
2.83	112682	VV	2.366	
3.15	110837	VV	2.328	
3.40	129808	VV	1.836	&ALD
3.87	22432	VV	.471	
4.14	33236	VV	.698	
5.03	12588	VV	.264	
5.26	20517	VV	.431	
5.58	119661	VV	2.513	
6.10	87786	VV	1.844	
7.28	172307	VV	2.279	&DDE
9.07	4975	VV	.104	
10.11	8746	VV	.184	
10.79	13724	VV	.288	
11.40	5315	VV	.112	
13.32	129010	VV	2.442	&PP DDT
20.15	135309	VB	1.929	&MIREX

REPORT: 3.11 CHANNEL: 24 6' 1.5%OV17/1.95%QF1 200

SAMPLE: R114CHROM102 INJECTED AT 15:19:03 ON JUN 3, 1977

ESTD METHOD: PEST

ACTUAL RUN TIME: 25.008 MINUTES

RT	AREA		PPT	NAME
1.10	46018	VV	.966	
1.56	40354	VV	.847	
1.86	250247	VV	3.021	&BHC A
2.33	75257	VV	1.060	&LIN
2.59	37053	VV	.778	
2.83	149703	VV	3.144	
3.14	47599	VV	1.000	
3.46	11109	VV	.157	&ALD
3.86	21815	VV	.458	
4.23	14151	VV	.297	
5.01	14727	VV	.309	
5.25	15071	VV	.316	
5.57	116924	VV	2.455	
6.06	69925	VV	1.468	
7.26	29697	VV	.393	&DDE
7.87	6140	VV	.129	
9.06	6436	VV	.135	
10.08	8192	VV	.172	
10.75	11812	VV	.248	
11.38	7584	VV	.159	
13.24	13835	BV	.262	&PP DDT
20.04	2279	VB	.032	&MIREX

REPORT: 2.11 CHANNEL: 24 6' 1.5%OV17/1.95%QF1 200

SAMPLE: R114POYLU INJECTED AT 14:42:44 ON JUN 3, 1977

ESTD METHOD: PEST

ACTUAL RUN TIME: 25.008 MINUTES

RT	AREA		PPT	NAME
1.09	8524	VV	.179	
1.56	43346	VV	.910	
1.86	182701	VV	2.205	&BHC A
2.33	87299	VV	1.230	&LIN
2.59	47192	VV	.991	
2.83	197058	VV	4.138	
3.14	58127	VV	1.221	
3.45	18255	VV	.258	&ALD
3.62	8857	VV	.186	
3.86	32975	VV	.692	
4.23	29765	VV	.625	
5.02	21601	VV	.454	
5.25	23925	VV	.502	
5.56	140297	VV	2.946	
6.05	85284	VV	1.791	
7.26	39078	VV	.517	&DDE
7.88	9326	VV	.196	
9.04	8355	VV	.175	
10.08	10629	VV	.223	
10.74	14368	VV	.302	
11.37	8919	VV	.187	
13.22	20577	VV	.390	&PP DDT
18.71	5087	VV	.107	
20.04	4343	VB	.062	&MIREX

REPORT: 2.31 CHANNEL: 24 6' 1.5%OV17/1.95%QF1 20(

SAMPLE: R115TENCHAR INJECTED AT 14:37:22 ON JUN 8, 1977

ESTD METHOD: PEST

ACTUAL RUN TIME: 25.017 MINUTES

RT	AREA		PPT	NAME
1.86	2336	VV	.028	&BHC A
2.33	1552	VV	.022	&LIN
3.48	1723	VV	.024	&ALD
21.64	9809	BB	.206	

REPORT: 3.11 CHANNEL: 24 6' 1.5%OV17/1.95%QF1 200

SAMPLE: R115TENPLN INJECTED AT 15:29:24 ON JUN 8, 1977

ESTD METHOD: PEST

ACTUAL RUN TIME: 25.017 MINUTES

BL > 10 MV
ENDED NOT ON BL

RT	AREA		PPT	NAME
1.09	42001	BV	.882	
1.49	55274	VV	1.161	
1.85	259556	VV	3.133	&BHC A
2.32	145174	VV	2.045	&LIN
2.58	26342	VV	.553	
2.82	53427	VV	1.122	
3.13	86788	VV	1.823	
3.45	22513	VV	.318	&ALD
3.85	14797	VV	.311	
4.21	12023	VV	.252	
5.01	9712	VV	.204	
5.23	16358	VV	.344	
5.54	75292	VV	1.581	
6.05	59804	VV	1.256	
7.25	19213	VV	.254	&DDE
7.88	7863	VV	.165	
9.02	7296	VV	.153	
10.03	7521	VV	.158	
10.70	10724	VV	.225	
11.34	8502	VV	.179	
13.17	13702	BV	.259	&PP DDT
18.66	8732	VB	.183	

REPORT: 4.11 CHANNEL: 24 6' 1.5%OV17/1.95%QF1 200

SAMPLE: R116POLY-U INJECTED AT 15:58:15 ON JUN 8, 1977

ESTD METHOD: PEST

ACTUAL RUN TIME: 25.017 MINUTES

ENDED NOT ON BL

RT	AREA		PPT	NAME
1.08	5857	VV	.123	
1.18	10290	VV	.216	
1.39	13615	VV	.286	
1.52	15581	VV	.327	
1.84	219257	VV	2.647	&BHC A
2.30	59664	VV	.840	&LIN
2.50	67861	VV	1.425	
2.80	46933	VV	.986	
3.11	144962	VV	3.044	
3.44	139561	VV	1.974	&ALD
3.84	13195	VV	.277	
4.33	26501	VV	.557	
4.75	5762	VV	.121	
4.97	31126	VV	.654	
5.53	131986	VV	2.772	
6.03	86650	VV	1.820	
7.25	4717	VV	.062	&DDE
7.59	14898	VV	.313	
9.88	6596	VV	.139	
10.69	10784	VV	.226	
11.32	8207	VV	.172	
13.26	17906	VV	.339	&PP DDT

REPORT: 5.11 CHANNEL: 24 6' 1.5%OV17/1.95%QF1 200

SAMPLE: R116CHROM010 INJECTED AT 16:26:53 ON JUN 8, 1977

ESTD METHOD: PEST

ACTUAL RUN TIME: 25.008 MINUTES

ENDED NOT ON BL

RT	AREA		PPT	NAME
1.11	5444	VV	.114	
1.21	9393	VV	.197	
1.42	12775	VV	.268	
1.56	14252	VV	.299	
1.38	212173	VV	2.561	&BHC A
2.34	61872	VV	.871	&LIN
2.55	68448	VV	1.437	
2.84	62165	VV	1.305	
3.15	139804	VV	2.936	
3.47	135109	VV	1.911	&ALD
3.87	15940	VV	.335	
4.36	26959	VV	.566	
4.79	5114	VV	.107	
5.00	32096	VV	.674	
5.57	128216	VV	2.693	
6.06	82641	VT	1.735	
7.28	6486	TV	.086	&DDE
7.62	14561	VV	.306	
9.93	6923	VV	.145	
10.73	11939	VV	.251	
11.36	8170	VV	.172	
13.29	16438	VV	.311	&PP DDT

REPORT: 3.51 CHANNEL: 24 6' 1.5%OV17/1.95%QF1 200

SAMPLE: R117CHR102 INJECTED AT 14:17:46 ON JUN 9, 1977

ESTD METHOD: PEST

ACTUAL RUN TIME: 25.008 MINUTES

RT	AREA		PPT	NAME
1.09	7662	VV	.161	
1.56	60987	VV	1.281	
1.85	187840	VV	3.490	&BHC A
2.31	49719	VV	1.080	&LIN
2.57	6389	VV	.134	
2.93	34557	VV	.726	
3.12	13927	VV	.292	
3.45	2312	VV	.051	&ALD
4.97	16770	VV	.352	
5.53	49074	VV	1.031	
6.03	42494	VV	.892	
7.22	21018	VV	.425	&DDE
9.08	5844	VV	.123	
9.90	5532	VV	.116	
10.63	5510	VV	.116	
11.30	9038	VV	.190	
13.54	13089	VV	.374	&PP DDT
18.60	9054	VB	.190	

REPORT: 2.11 CHANNEL: 24 6' 1.5%OV17/1.95%QF1 200

SAMPLE: R117POLY-U INJECTED AT 13:46:42 ON JUN 9, 1977

ESTD METHOD: PEST

ACTUAL RUN TIME: 25.017 MINUTES

RT	AREA		PPT	NAME
1.56	58637	TV	1.231	
1.85	102851	VV	1.911	&BHC A
2.31	46138	VV	1.002	&LIN
2.57	8701	VV	.183	
2.93	55410	VV	1.164	
3.12	21278	VV	.447	
3.44	13849	VV	.303	&ALD
3.84	6442	VV	.135	
4.24	12318	VV	.259	
4.97	27527	VV	.578	
5.53	76413	VV	1.605	
6.03	62170	VV	1.306	
7.22	32429	VV	.656	&DDE
8.42	5811	VV	.122	
9.07	9332	VV	.196	
9.92	7444	VV	.156	
10.65	8383	VV	.176	
11.29	12165	VV	.255	
13.31	13435	VV	.384	&PP DDT

REPORT: 2 CHANNEL: 18 6' 1.5%OV17/1.95%QF1 200

SAMPLE: R118TENAX INJECTED AT 14:48:16 ON JUN 13, 1977

ESTD METHOD: PESTX

ACTUAL RUN TIME: 25.017 MINUTES

ENDED NOT ON BL

RT	AREA		PPT	NAME
1.03	12717	TV	.267	
1.09	9021	VT	.189	
1.56	50159	VV	1.053	
1.86	172460	VV	2.074	&BHC A
2.32	55632	VV	.783	&LIN
2.58	6355	VV	.133	
2.82	12279	VV	.258	
3.14	12509	VV	.263	
3.46	1666	VV	.024	&ALD
4.26	4815	VV	.101	
5.00	14317	VV	.301	
5.56	48326	VV	1.015	
6.07	42125	VV	.885	
7.26	17041	VT	.223	&DDE
10.67	6936	VV	.146	
11.36	12766	VV	.268	
13.67	16724	VV	.303	&PP DDT
18.68	13773	VB	.289	

REPORT: 3 CHANNEL: 18 6' 1.5%OV17/1.95%QF1 200

SAMPLE: R118POLY-U INJECTED AT 15:34:25 ON JUN 13, 1977

ESTD METHOD: PESTX

ACTUAL RUN TIME: 25.017 MINUTES

ENDED NOT ON BL

RT	AREA		PPT	NAME
1.56	41529	VV	.872	
1.85	112301	VV	1.351	&BHC A
2.32	95911	VV	1.351	&LIN
2.57	11440	VV	.240	
2.81	27054	VV	.568	
3.13	24930	VV	.524	
3.45	10284	VV	.146	&ALD
3.85	9659	VV	.203	
4.12	14213	VV	.298	
5.22	29611	VV	.622	
5.55	40933	VV	.860	
5.79	19590	VV	.411	
6.07	66147	VV	1.389	
7.25	54208	VV	.708	&DDE
7.89	16299	VV	.342	
8.49	8423	VV	.177	
9.05	15636	VV	.328	
10.08	18184	VV	.382	
10.69	14903	VV	.313	
11.36	22204	VV	.466	
13.24	34654	VV	.628	&PP DDT
15.00	9501	VV	.200	
17.93	5333	VV	.112	
18.70	13696	VV	.288	

REPORT: 21 CHANNEL: 18 6' 1.5%OV17/1.95%QF1 200

SAMPLE: R119TENAX INJECTED AT 8:45:53 ON JUN 20, 1977

ESTD METHOD: PEST

ACTUAL RUN TIME: 25.017 MINUTES

BL > 10 MV

RT	AREA		PPT	NAME
1.10	50906	BV	1.069	
1.33	9107	VV	.191	
1.54	16076	VV	.338	
1.85	147203	VV	1.750	&BHC A
2.32	59354	VV	.828	&LIN
2.58	53483	VV	1.123	
2.82	187189	VV	3.931	
3.11	20519	VV	.431	
3.63	8631	VV	.181	
3.84	31398	VV	.659	
4.19	16398	VV	.344	
4.99	11384	VV	.239	
5.21	23927	VV	.502	
5.53	126835	VV	2.664	
6.04	92322	VV	1.939	
7.22	24372	VV	.314	&DDE
7.86	5977	VV	.126	
10.04	6316	VV	.133	
10.69	13394	VV	.281	
13.15	14305	BV	.264	&PP DDT
19.87	2433	VB	.034	&MIREX

REPORT: 22 CHANNEL: 18 6' 1.5%OV17/1.95%QF1 200

SAMPLE: R119CHR102 INJECTED AT 9:16:54 ON JUN 20, 1977

ESTD METHOD: PEST

ACTUAL RUN TIME: 25.017 MINUTES

BL > 10 MV
ENDED NOT ON BL

RT	AREA		PPT	NAME
1.09	41103	BV	.863	
1.32	24579	VV	.516	
1.55	18592	VV	.390	
1.85	158462	VV	1.884	&BHC A
2.32	63807	VV	.890	&LIN
2.58	61831	VV	1.298	
2.82	197022	VV	4.137	
3.12	49780	VV	1.045	
3.43	3057	VV	.043	&ALD
3.62	7186	VV	.151	
3.84	29994	VV	.630	
4.20	19315	VV	.406	
5.00	13407	VV	.282	
5.22	28903	VV	.607	
5.53	139416	VV	2.928	
6.05	108117	VV	2.270	
7.23	31876	VV	.410	&DDE
7.84	6396	VV	.134	
8.97	6891	VV	.145	
10.04	10791	VV	.227	
10.70	16451	VV	.345	
11.31	7055	VV	.148	
13.16	24631	VV	.454	&PP DDT
19.91	1753	VV	.024	&MIREX

REPORT: 23 CHANNEL: 18 6' 1.5%OV17/1.95%QF1 200

SAMPLE: R120CHR102 INJECTED AT 9:57:52 ON JUN 20, 1977

ESTD METHOD: PEST

ACTUAL RUN TIME: 25.017 MINUTES

BL > 10 MV
ENDED NOT ON BL

RT	AREA		PPT	NAME
1.10	54209	TV	1.138	
1.51	28335	VV	.595	
1.86	161695	VV	1.922	&BHC A
2.32	47593	VV	.664	&LIN
2.59	26790	VV	.563	
2.82	95316	VV	2.002	
3.13	49462	VV	1.039	
3.45	8402	VV	.118	&ALD
3.85	17953	VV	.377	
4.21	11848	VT	.249	
4.99	13867	TV	.291	
5.21	15261	VV	.320	
5.54	92824	VV	1.949	
6.04	69175	VV	1.453	
7.23	23641	VT	.304	&DDE
9.97	7113	VV	.149	
10.68	12311	VV	.259	
11.28	7223	VV	.152	
13.17	15054	TV	.278	&PP DDT
18.56	9735	VB	.204	

REPORT: 24 CHANNEL: 18 6' 1.5%OV17/1.95%QF1 200

SAMPLE: R120POLY-U INJECTED AT 10:30:32 ON JUN 20, 1977

ESTD METHOD: PEST

ACTUAL RUN TIME: 25.017 MINUTES

ENDED NOT ON BL

RT	AREA		PPT	NAME
1.08	7853	BV	.165	
1.49	32909	VV	.691	
1.83	116536	VV	1.385	&BHC A
2.29	54827	VV	.765	&LIN
2.55	31396	VV	.659	
2.79	107579	VV	2.259	
3.09	64308	VV	1.350	
3.42	9971	VV	.140	&ALD
3.57	8775	VV	.184	
3.81	25632	VV	.538	
4.16	2>408	VV	.555	
5.16	44653	VV	.938	
5.49	117852	VV	2.475	
6.03	114229	VV	2.399	
7.17	34460	VV	.444	&DDE
7.79	8722	VV	.183	
8.92	8149	VV	.171	
9.94	11506	VV	.242	
10.60	15779	VV	.331	
11.21	9741	VV	.205	
13.06	20077	BV	.370	&PP DDT
18.47	13918	VB	.292	

REPORT: 26 CHANNEL: 18 6' 1.5%OV17/1.95%QF1 200

SAMPLE: R121POLY-U INJECTED AT 11:32:47 ON JUN 20, 1977

ESTD METHOD: PEST

ACTUAL RUN TIME: 25.008 MINUTES

ENDED NOT ON BL

RT	AREA		PPT	NAME
1.55	33862	VV	.711	
1.84	63308	VV	.753	&BHC A
2.30	60157	VV	.839	&LIN
2.55	15052	VV	.316	
2.78	45560	VV	.957	
3.09	25742	VV	.541	
3.41	20802	VV	.292	&ALD
3.80	12512	VV	.263	
4.20	15581	VV	.327	
4.94	17504	VV	.368	
5.14	8356	VV	.175	
5.48	62550	VV	1.314	
5.95	50668	VV	1.064	
7.14	52891	VV	.681	&DDE
8.36	6210	VV	.130	
8.94	9659	VV	.203	
9.91	10297	VV	.216	
10.54	9503	VV	.200	
11.17	11576	VV	.243	
13.04	21658	VV	.399	&PP DDT
18.38	8886	VV	.187	

REPORT: 25 CHANNEL: 18 6' 1.5%OV17/1.95%QF1 200

SAMPLE: R121TENAX INJECTED AT 11:02:05 ON JUN 20, 1977

ESTD METHOD: PEST

ACTUAL RUN TIME: 25.017 MINUTES

BL > 10 MV
ENDED NOT ON BL

RT	AREA		PPT	NAME
1.09	27409	BV	.576	
1.42	6015	VV	.126	
1.55	34508	VV	.725	
1.84	139608	VV	1.659	&BHC A
2.31	105696	VV	1.474	&LIN
2.56	17371	VV	.365	
2.80	45542	VV	.956	
3.10	11225	VV	.236	
3.43	1195	VV	.017	&ALD
3.82	10519	VV	.221	
4.18	8905	VV	.187	
4.98	8421	VV	.177	
5.17	11229	VV	.236	
5.50	56624	VV	1.189	
6.03	54924	VV	1.153	
7.18	44966	VV	.579	&DDE
8.41	5679	VV	.119	
8.97	7693	VV	.162	
9.99	10970	VV	.230	
10.60	10857	VV	.228	
11.23	11957	VV	.251	
13.12	24423	VV	.450	&PP DDT
14.84	5024	VV	.105	
18.47	14132	VV	.297	

REPORT: 27 CHANNEL: 18 6' 1.5%OV17/1.95%QF1 200

SAMPLE: R122TENAX INJECTED AT 12:55:01 ON JUN 20, 1977

ESTD METHOD: PEST

ACTUAL RUN TIME: 25.017 MINUTES

ENDED NOT ON BL

RT	AREA		PPT	NAME
1.02	18897	BV	.397	
1.40	4786	VV	.101	
1.55	20152	VV	.423	
1.84	71887	VV	.855	&BHC A
2.30	64122	VV	.894	&LIN
2.55	8508	VV	.179	
2.79	22171	VV	.466	
3.10	14462	VV	.304	
3.41	6169	VV	.087	&ALD
3.81	5651	VV	.119	
4.26	5776	VV	.121	
5.17	16667	VV	.350	
5.50	23689	VV	.497	
5.74	10904	VV	.229	
6.03	40651	VV	.854	
7.17	46657	VV	.601	&DDE
7.78	11044	VV	.232	
8.40	7778	VV	.163	
8.95	13025	VV	.274	
9.97	12808	VV	.269	
10.53	9805	VV	.206	
11.22	16322	VV	.343	
13.09	12243	VV	.257	
13.54	15365	VV	.283	&PP DDT
14.84	6667	VV	.140	
17.78	5307	VV	.111	
18.47	14351	VV	.301	

REPORT: 28 CHANNEL: 18 6' 1.5%OV17/1.95%QF1 200

SAMPLE: R122CHR102 INJECTED AT 13:26:42 ON JUN 20, 1977

ESTD METHOD: PEST

ACTUAL RUN TIME: 25.008 MINUTES

ENDED NOT ON BL

RT	AREA		PPT	NAME
1.03	20865	BV	.438	
1.41	5829	VV	.122	
1.55	25459	VV	.535	
1.84	80789	VV	.960	&BHC A
2.31	81557	VV	1.137	&LIN
2.55	9034	VV	.190	
2.79	22720	VV	.477	
3.10	12666	VV	.266	
3.42	3053	VV	.043	&ALD
3.82	5638	VV	.118	
4.26	5404	VV	.113	
5.01	9027	VV	.190	
5.17	8270	VV	.174	
5.50	25558	VV	.537	
5.73	11433	VV	.240	
5.99	39661	VV	.833	
7.17	60907	VV	.784	&DDE
8.40	8548	VV	.179	
8.95	13775	VV	.289	
9.95	13695	VV	.288	
10.52	10833	VV	.227	
11.21	17728	VV	.372	
13.09	12993	VV	.273	
13.52	16707	VV	.308	&PP DDT
14.83	7087	VV	.149	
18.45	19178	VV	.403	

REPORT: 5 CHANNEL: 18 6' 1.5%OV17/1.95%QF1 200

SAMPLE: R123CHR102 ' INJECTED AT 14:31:04 ON JUN 22, 1977

ESTD METHOD: PEST

ACTUAL RUN TIME: 25.008 MINUTES

ENDED NOT ON BL

RT	AREA		PPT	NAME
1.06	14376	BV	.302	
1.41	5280	VV	.111	
1.54	27512	VV	.578	
1.84	62309	VV	.811	&BHC A
2.30	39790	VV	.612	&LIN
2.79	10136	VV	.213	
3.10	7793	VV	.164	
4.98	5903	VV	.124	
5.49	20267	VV	.426	
5.69	7623	VV	.160	
5.98	26790	VV	.563	
7.16	32662	VV	.483	&DDE
8.93	7909	VV	.166	
9.94	8278	VV	.174	
10.52	7568	VV	.159	
11.20	12519	VV	.263	
13.52	21157	VV	.434	&PP DDT
14.84	5117	VV	.107	
18.46	14447	VB	.303	

REPORT: 4 CHANNEL: 18 6' 1.5%OV17/1.95%QF1 200

SAMPLE: R123POLY-U INJECTED AT 13:59:46 ON JUN 22, 1977

ESTD METHOD: PEST

ACTUAL RUN TIME: 25.008 MINUTES

ENDED NOT ON BL

RT	AREA		PPT	NAME
1.54	22732	VV	.477	
1.72	5962	VV	.125	
1.84	33395	VV	.434	&BHC A
2.30	40211	VV	.619	&LIN
2.55	5010	VV	.105	
2.78	14657	VV	.308	
3.07	6068	VV	.127	
3.42	5071	VV	.079	&ALD
3.81	5639	VV	.118	
4.06	7114	VV	.149	
5.17	15223	VV	.320	
5.50	24137	VV	.507	
5.73	11194	VV	.235	
6.07	43356	VV	.910	
7.17	38653	VV	.572	&DDE
7.80	8283	VV	.174	
8.40	5179	VV	.109	
8.95	10580	VV	.222	
10.01	10632	VV	.223	
10.56	8604	VV	.181	
11.24	14383	VV	.302	
13.12	25014	VV	.513	&PP DDT
14.86	5813	VV	.122	
18.49	17218	VV	.362	

REPORT: 7 CHANNEL: 18 6' 1.5%OV17/1.95%QF1 200

SAMPLE: R124TENAX , INJECTED AT 15:33:19 ON JUN 22, 1977

ESTD METHOD: PEST

ACTUAL RUN TIME: 25.008 MINUTES

ENDED NOT ON BL

RT	AREA		PPT	NAME
1.08	14204	TT	.298	
1.41	7270	TV	.153	
1.56	29699	VV	.624	
1.84	66049	VV	.859	&BHC A
2.31	57861	VV	.890	&LIN
2.56	9734	VV	.204	
2.80	23423	VV	.492	
3.10	13566	VV	.285	
3.43	1619	VV	.025	&ALD
3.82	8032	VV	.169	
4.18	6399	VT	.134	
4.96	8654	TV	.182	
5.17	6206	VV	.130	
5.50	48295	VV	1.014	
5.99	40313	VV	.847	
7.16	40059	VV	.593	&DDE
8.95	6112	VV	.128	
9.96	8243	VV	.173	
10.57	7671	VV	.161	
11.21	9901	VV	.208	
13.11	18978	VV	.389	&PP DDT
18.46	11099	VT	.233	

REPORT: 6 CHANNEL: 18 6' 1.5%OV17/1.95%QF1 200

SAMPLE: R124POLY-U INJECTED AT 15:02:09 ON JUN 22, 1977

ESTD METHOD: PEST

ACTUAL RUN TIME: 25.025 MINUTES

ENDED NOT ON BL

RT	AREA		PPT	NAME
1.56	36521	VV	.767	
1.85	44891	VV	.584	&BHC A
2.31	48834	VV	.751	&LIN
2.56	7315	VV	.154	
2.80	23293	VV	.489	
3.11	22176	VV	.466	
3.43	3305	VV	.052	&ALD
3.83	9512	VV	.200	
4.20	10091	VV	.212	
4.97	13712	VV	.288	
5.17	6641	VV	.139	
5.51	63553	VV	1.335	
6.00	52036	VV	1.093	
7.19	45098	VV	.667	&DDE
8.40	5139	VV	.108	
8.99	8395	VV	.176	
9.97	10434	VV	.219	
10.61	10080	VV	.212	
11.24	12554	VV	.264	
13.16	23051	VV	.472	&PP DDT
18.52	11246	VV	.236	

REPORT: 3 CHANNEL: 18 6' 1.5%OV17/1.95%QF1 200

SAMPLE: R125CHR102 INJECTED AT 15:42:08 ON JUN 27, 1977

ESTD METHOD: PEST

ACTUAL RUN TIME: 25.008 MINUTES

BL > 10 MV
ENDED NOT ON BL

RT	AREA		PPT	NAME
1.10	28907	BV	.607	
1.43	12729	VV	.267	
1.57	30722	VV	.645	
1.86	111983	VV	1.317	&BHC A
2.34	64302	VV	.886	&LIN
2.60	20693	VV	.435	
2.84	81519	VV	1.712	
3.14	11519	VV	.242	
3.45	1139	VV	.016	&ALD
3.88	15093	VV	.317	
4.24	9955	VV	.209	
5.05	9242	VV	.194	
5.26	12769	VV	.268	
5.59	78958	VV	1.658	
6.09	58520	VV	1.229	
7.28	53127	VV	.671	&DDE
9.08	6251	VV	.131	
10.16	12007	VV	.252	
10.77	10969	VV	.230	
11.39	11096	VV	.233	
13.30	27932	VV	.496	&PP DDT
18.75	12511	VV	.263	

REPORT: 2 CHANNEL: 18 6' 1.5%OV17/1.95%QF1 200

SAMPLE: R125TENAX INJECTED AT 15:11:31 ON JUN 27, 1977

ESTD METHOD: PEST

ACTUAL RUN TIME: 25.008 MINUTES

RT	AREA		PPT	NAME
1.10	36577	TT	.768	
1.43	10955	VV	.230	
1.57	28577	VV	.600	
1.86	107667	VV	1.266	&BHC A
2.33	58939	VV	.812	&LIN
2.58	25880	VV	.543	
2.83	92170	VV	1.936	
3.64	7081	VV	.149	
3.86	14176	VV	.298	
4.23	11972	VV	.251	
5.26	21858	VV	.459	
5.56	71506	VV	1.502	
6.10	66779	VV	1.402	
7.25	53742	VV	.679	&DDE
8.54	5373	VV	.113	
9.02	7127	VV	.150	
10.12	11940	VV	.251	
10.72	9877	VV	.207	
11.34	9730	VV	.204	
13.24	22464	BV	.399	&PP DDT
18.68	12109	VB	.254	

REPORT: 6 CHANNEL: 18 6' 1.5%OV17/1.95%QF1 200

SAMPLE: R126CHR102 INJECTED AT 8:39:11 ON JUN 28, 1977

ESTD METHOD: PEST

ACTUAL RUN TIME: 25.008 MINUTES

ENDED NOT ON BL

RT	AREA		PPT	NAME
1.08	22165	BV	.465	
1.41	13182	VV	.277	
1.53	15384	VV	.323	
1.83	115024	VV	1.375	&BHC A
2.30	21551	VV	.301	&LIN
2.55	13968	VV	.293	
2.79	53325	VV	1.120	
3.08	13111	VV	.275	
3.80	12283	VV	.258	
4.14	7254	VV	.152	
4.93	9479	VV	.199	
5.14	9612	VV	.202	
5.47	65336	VV	1.383	
5.96	50002	VV	1.050	
7.13	42290	VV	.545	&DDE
8.90	6505	VV	.137	
9.94	13228	VV	.278	
10.55	10777	VV	.226	
11.15	9922	VV	.208	
13.03	27796	VV	.507	&PP DDT
14.74	4913	VV	.103	
18.37	11041	VV	.232	

REPORT: 7 CHANNEL: 18 6' 1.5%OV17/1.95%QF1 200

SAMPLE: R126POLY-U INJECTED AT 9:10:29 ON JUN 28, 1977

ESTD METHOD: PEST

ACTUAL RUN TIME: 25.017 MINUTES

ENDED NOT ON BL

RT	AREA		PPT	NAME
1.54	16608	VV	.349	
1.84	66485	VV	.795	&BHC A
2.30	19848	VV	.278	&LIN
2.56	11642	VV	.244	
2.79	51649	VV	1.085	
3.09	21685	VV	.455	
3.38	5322	VV	.074	&ALD
3.81	14739	VV	.310	
4.16	10978	VV	.231	
4.95	11139	VV	.234	
5.16	11178	VV	.235	
5.48	68606	VV	1.441	
5.98	53779	VV	1.129	
7.15	35922	VV	.463	&DDE
7.76	5456	VV	.115	
8.92	6205	VV	.130	
9.97	12306	VV	.258	
10.58	9978	VV	.210	
11.19	8636	VV	.181	
13.06	26945	VV	.491	&PP DDT
18.41	10486	VV	.220	

TECHNICAL REPORT DATA
(Please read Instructions on the reverse before completing)

1. REPORT NO. EPA-600/1-77-050	2.	3. RECIPIENT'S ACCESSION NO.
4. TITLE AND SUBTITLE Evaluation of Collection Media for Low Levels of Airborne Pesticides		5. REPORT DATE October 1977
		6. PERFORMING ORGANIZATION CODE
7. AUTHOR(S) John W. Rhoades and Donald E. Johnson		8. PERFORMING ORGANIZATION REPORT
9. PERFORMING ORGANIZATION NAME AND ADDRESS Southwest Research Institute, 8500 Culebra Road, San Antonio, Texas 78284		10. PROGRAM ELEMENT NO. 1EA615
		11. CONTRACT/GRANT NO. 68-02-2235
12. SPONSORING AGENCY NAME AND ADDRESS Health Effects Research Laboratory RTP-NC, Office of Research and Development, U.S. Environmental Protection Agency, Research Triangle Park, N.C. 27711		13. TYPE OF REPORT AND PERIOD COVERED
		14. SPONSORING AGENCY CODE EPA-600/11

15. SUPPLEMENTARY NOTES

16. ABSTRACT

Polyurethane foam plugs, Chromosorb 102, and Tenax GC have all been found to be better sorbents than cottonseed oil for high volume collection of airborne chlorinated and organophosphate pesticides and polychlorinated biphenyls. None of these were satisfactory for the recovery of carbofuran or carbaryl. A new high volume collecting module concept capable of use with polyurethane foam, porous polymer beads, liquid coated glass beads, or other solids was developed. The entire collector is Soxhlet extracted and no disassembly is required. The collector-extractor is ready for reuse as soon as residential solvent is removed.

17. KEY WORDS AND DOCUMENT ANALYSIS

a. DESCRIPTORS	b. IDENTIFIERS/OPEN ENDED TERMS	c. COSATI Field/Group
pesticides collecting methods air	organophosphate pesticides chlorinated pesticides	07 C 14 B

18. DISTRIBUTION STATEMENT RELEASE TO PUBLIC	19. SECURITY CLASS (This Report) UNCLASSIFIED	21. NO. OF PAGES 138
	20. SECURITY CLASS (This page) UNCLASSIFIED	22. PRICE

EPA Form 2220-1 (9-73)