EPA-600/2-74-009b
March 1975

Environmental Protection Technology Series

# State-of-The-Art For The Inorganic Chemicals Industry: Commercial Explosives

Office of Research and Development
U.S. Environmental Protection Agency
Washington, D.C. 20460

## RESEARCH REPORTING SERIES

Research reports of the Office of Research and Development, Environmental Protection Agency, have been grouped into five series. These five broad categories were established to facilitate further development and application of environmental technology. Elimination of traditional grouping was consciously planned to foster technology transfer and a maximum interface in related fields. The five series are:

1. Environmental Health Effects Research
2. Environmental Protection Technology
3. Ecological Research
4. Environmental Monitoring
5. Socioeconomic Environmental Studies

This report has been assigned to the ENVIRONMENTAL PROTECTION TECHNOLOGY series. This series describes research performed to develop and demonstrate instrumentation, equipment and methodology to repair or prevent environmental degradation from point and non-point sources of pollution. This work provides the new or improved technology required for the control and treatment of pollution sources to meet environmental quality standards.

This report has been reviewed by the Office of Research and Development. Approval does not signify that the contents necessarily reflect the views and policies of the Environmental Protection Agency, nor does mention of trade names or commercial products constitute endorsement or recommendation for use.

ABSTRACT

A literature and field study of the commercial explosives industry reveals that on the basis of products manufactured, plant size, and the nature of the wastewater, the industry may be divided into three segments. One, complex facilities, are large plants manufacturing a variety of explosives and intermediate products. The second category is small specialized formulation plants, typically limited to blending explosives formulations for use in nearby mining activities. The final category is specialty product facilities, devoted to manufacture of select ingredients such as lead azide and other explosives initiators, blasting caps, electric matches and similar appurtenance items.

The explosives industry discharges large volumes of wastewater, typically high in BOD, nitrogen, and solids, frequently at extreme pH, and containing trace to high quantities of dissolved and particulate explosives products. Although pollution abatement technology has not been widely implemented within the explosives industry, there is potential for significant abatement of pollutant discharge by good housekeeping practice, application of proven treatment technology and under certain conditions total wastewater containment.

CONTENTS


| Section | | Page |
|---|---|---|
| I. | Conclusions | 1 |
| II. | Recommendations | 3 |
| III. | Introduction | 5 |
| IV. | Scope of Study | 6 |
| V. | Description of Industry | 7 |
| VI. | Explosives Production | 22 |
| VII. | Wastewater Characterization | 36 |
| VIII. | Treatment Technology | 61 |
| IX. | Acknowledgements | 76 |
| X. | References | 77 |
| XI. | Appendix | 80 |

FIGURES


| | | Page |
|---|---|---|
| 1. | Annual Consumption of Commercial Explosives | 9 |
| 2. | Ammonium Nitrate-Based Explosives Consumption | 16 |
| 3. | Annual Production of Water Gel and Slurry Explosives | 18 |
| 4. | Production of Black Powder and Liquid Oxygen Explosives | 21 |
| 5. | Ammonia Production Diagram | 23 |
| 6. | Nitric Acid Plant | 25 |
| 7. | Nitric Acid Concentration Plant | 26 |
| 8. | Nitroglycerin Production Schematic | 28 |
| 9. | Smokeless Powder Process Flow Chart | 31 |
| 10. | PETN Production and Acetone Recovery | 34 |

TABLES


| | | Page |
|---|---|---|
| 1. | Commercial Explosives and Blasting Agents Sold for Consumption in the United States | 10 |
| 2. | Major Commercial Explosives | 12 |
| 3. | Percentage Distribution of Commercial Explosives Use | 13 |
| 4. | Common Ingredients of Dynamites | 15 |
| 5. | Typical Ingredients of Water Gels and Slurries | 19 |
| 6. | Typical Ingredients Involved in the Manufacture of Smokeless Powder | 19 |
| 7. | Typical Composition of Dynamite | 30 |
| 8. | Ingredients of ANFO Explosives | 33 |
| 9. | Complex Plants: Water Use and Wastewater Volumes | 38 |
| 10. | On-Site Plants: Water Use and Wastewater Volumes | 39 |
| 11. | Distribution of Water Use in the Explosives Industry | 40 |
| 12. | Specialty and Intermediate Product Water and Wastewater Volumes | 42 |
| 13. | Raw Wastewater Concentrations for Complex and On-Site Facilities | 44 |
| 14. | Daily Pollutant Discharges for Complex and On-Site Facilities | 46 |
| 15. | Production-Based Pollutant Discharge for Complex and On-Site Facilities | 48 |
| 16. | Wastewater Concentrations for Specialty and Intermediate Products | 51 |

TABLES (Continued)


| | | Page |
|---|---|---|
| 17. | Daily Pollutant Discharges for Specialty and Intermediate Products | 54 |
| 18. | Production-Based Pollutant Discharge for Specialty and Intermediate Products | 57 |
| 19. | Major Pollutants of the Commercial Explosives Industry | 62 |
| 20. | Treatment Plant Operation and Average Waste Concentrations | 67 |
| 21. | Nitrate Treatment Methods | 70 |

# I. CONCLUSIONS

On the basis of products manufactured, plant size and the nature of the wastewater, the commercial explosives industry may be categorized into three divisions. One, the complex facilities, are large plants manufacturing a variety of explosives intermediates and explosives products. These may include nitric acid, ammonium nitrate, nitroglycerin, dynamites, water gels, ammonium nitrate-fuel oil mixtures (ANFO) and many others. The second category is small plants located on or near mining fields, which blend explosives for nearby use. Typical explosives products are ANFO and water gels, with intermediates received in bulk and explosives being formulated to customer specification. The final category is specialty product plants, involved in the manufacture of select ingredients such as lead azide and other initiation explosives, blasting caps, electric matches and similar appurtenance items. Some complex facilities incorporate specialty product lines.

The explosives industry generates large volumes of both cooling and process effluents. Average water use in the industry is 0.88 MGD for complex facilities and 0.008 MGD for the on-site plants. Process and cleanup water represents 22-33 percent and cooling water 19-56 percent of this flow. The industry-wide average water use in 10,973 gallons per ton of product.

Wastewaters of the explosives industry are typically high in BOD, oil and grease, ammonia and nitrate nitrogen, and solids. Particularly contributing to the dissolved solids is the high sulfate content of the wastewater, resulting from the use of nitric plus sulfuric acid in various explosives nitration reactions. Average discharge in lbs/ton product for complex and on-site facilities respectively are, for BOD 21.6 and 0.2, total solids 100.2 and 11.2, $NH_3$ -N 4.9 and 0.07 and $NO_3$ -N 8.7 and 0.04.

With certain notable exceptions, pollutant abatement procedures have not been implemented in the commercial explosives industry. Oil skimmers and settling ponds or sumps are standard practice, but due to

poor design or maintenance are not particularly effective for oil and suspended solids control. Beyond these measures, pollution abatement activities are limited to a relatively few plants which have implemented improved housekeeping methods, or employ evaporative ponds and land disposal schemes. However, much of the technology applicable for control of pollutants associated with the explosives industry has been proven in pilot or full-scale operation, and there is significant potential for pollution abatement within the industry.

## II. RECOMMENDATIONS

The volume and concentration of wastewaters of the explosives industry can be significantly reduced by close process control, improved housekeeping practice, and separation of contaminated and clean process flows. Dry clean-up procedures, as currently practiced in some segments of the industry, have the potential to reduce pollutant discharges, with the possible additional benefits of product recovery and reduction in water use. Such procedures should be practiced on a routine basis within the industry, where feasible.

The wastewaters of the industry exhibit pH ranging from extremely acidic to highly alkaline. Neutralization is a direct and easily applied control procedure, which should be implemented within the industry. In addition, it appears that alkaline washwater, used to neutralize residual acidity in nitroglycerin manufacture, could be recycled, thereby reducing water use and avoiding generation of a wastewater of high pH, solids and nitroglycerin content. The technical feasibility of recycle of this process flow should be assessed and recycle implemented if feasible.

Control of BOD and ammonia through biological treatment processes appears to be feasible, based upon limited experience within the explosives industry. There are other alternatives in use, including land irrigation and evaporative ponds. In instances where these latter two techniques lack feasibility, biological treatment, either by activated sludge or lagoons, should be considered as a possible control technique.

The need for nitrate pollution abatement within the explosives industry is obvious. Based upon results of Army studies on nitrate treatment in wastes of a nature similar to the explosives effluents, biodenitrification, ion exchange and reverse osmosis all have technical feasibility. From the point of both treatment efficiency and product recovery, ion exchange, as practiced in one instance by a fertilizer manufacturer (18) appears appropriate for serious consideration, due to the potential to recover ammonium nitrate upon regeneration of the exhausted resin. Ammonium nitrate is a raw material of the explosives industry, and treatment cost may be significantly offset through

by-product recovery.

It is probable that sulfate control will eventually be required of the explosives industry. Current technology alternatives for sulfate control are not particularly attractive on any basis, including cost, product recovery or treatment efficiency. However, there are technically feasible methods proven, at least at the pilot scale, and the industry should begin to assess and demonstrate the application of these technologies on sulfate abatement for their wastes.

Improved design and maintenance of oil skimmers and suspended solids settling basins has been shown to result in appreciable reduction in discharge of these pollutants. The industry should apply accepted design and maintenance standards in their use of these control facilities.

# III. INTRODUCTION

The manufacture of explosives for commercial and military uses is a major industry with many different types of products, and a spectrum in character and concentration of product-related wastewaters. Annually, over 2.5 billion tons of commercial explosives alone are produced. These are primarily nitrogen-based compounds, predominately organic in nature. Intermediate and adjunct products are often associated with the specific manufacture of explosives. Typical intermediate products include ammonia, ammonium nitrate, and nitric and sulfuric acids. Adjunct products include electric matches, detonating cords, blasting caps and other explosive initiating devices.

The nature of the commercial explosives industry has changed rapidly since the 1950's. Many products have been phased out or significantly reduced in use, due to the development of more effective and reliable explosives, and to changes in the purpose of the explosives used.

Wastewaters of the explosives industry are of concern both due to their pollutional nature, and for certain wastes due to their hazardous character. For example, wastewaters from nitroglycerin manufacture are often saturated with soluble nitroglycerin, which may become concentrated and represent a potential explosive hazard. There is very limited information in the published literature pertaining to the wastewaters of explosives manufacture, or to pollution abatement technology applicable to control pollutant discharge from the industry.

Thus, a program of wastewater characterization and treatment technology assessment for the explosives industry is required. Due to the difference in products of commercial versus military application, it is appropriate to consider them separately. This study focuses upon commercial explosives manufacture.

# IV. SCOPE OF STUDY

This study represents a preliminary assessment of the products and pollution potential of commercial explosives manufacture, the extent of pollution control utilized by that industry, and the data base available within the industry to characterized its wastewaters and effectiveness of pollution control. Primary sources of information included the published literature, discharge permit applications submitted to the EPA by the subject industry at the time of this study, and plant visits to selected manufacturing sites.

The plant visits included discussions with plant operating personnel, inspection of the manufacturing and treatment facilities, and review of such data on wastewater character and pollution abatement as were available from the plant. No independent sampling or analyses were undertaken during the study, and data presented within this report were derived only from the previously described sources. Due to the limited scope of the study, relatively few plants could be visited. Selection of plants was based upon an attempt to visit at least one plant manufacturing each explosives product, and two or more plants producing major products such as dynamites. In total eleven plants, representing 40 process lines for intermediate and final explosives products, were visited.

## V. DESCRIPTION OF INDUSTRY

The chemical explosive is a material which, under the influence of thermal or mechanical shock, decomposes rapidly and spontaneously with the evolution of large quantities of heat and gas. The hot gases cause extremely high pressure if the explosion is initiated in a confined space. The usefulness of a particular explosive is determined to a large extent by its brisance or shattering action, and its sensitivity to explosion initiation upon impact (1). In addition, it is important that explosives for use in subsurface mines, particularly coal mines, be of such a type that they evolve no toxic gases upon explosion, and produce a minimum of flame. This latter requirement is necessary in order that the explosion not ignite mixtures of air and coal dust within the mines.

Explosives for mine use are tested, and their properties specified, by the Bureau of Mines of the U.S. Department of the Interior (2). Acceptable explosives for mine use are classified as "permissibles." Permissibles differ from other explosives, particularly black powder, most markedly in the fact that they produce a flame of small size and extremely short duration. Permissible explosives normally contain coolants to regulate the temperature of their flames, and hence reduce the possibility of their ignition of combustible mixtures. Permissible explosives include ammonium nitrate explosives, hydrated explosives, organic nitrate explosives and certain nitroglycerin-based explosives which contain an excess of free water (1).

For purposes of classification, it is convenient to place commercial explosives in two categories in accordance with their explosive behavior; high and low explosives. Of the high explosives, initiating (detonating) or primary high explosives are quite sensitive materials, which can be made to explode by the application of fire or by means of a slight impact. They are dangerous to handle, and are used in comparatively small quantities to initiate the explosion of larger quantities of less sensitive explosives. Initiating explosives are generally used in primers, detonators and percussion caps. They are typically mercury or lead compounds

such as mercury fulminate and lead azide, styphnate or diazodinitrophenol.

Secondary high explosives are materials which are relatively insensitive to both mechanical shock and flame, but which explode with great violence when set off by an explosive shock from a detonator. Decomposition proceeds by means of a detonation, which is a rapid chemical chain reaction type destruction progressing directly through the mass of the secondary explosive. It is this high rate of energy release that provides the brisance property.

Low explosives differ in their mode of decomposition from high explosives, in that they only burn. Burning is a phenomenon that proceeds not through the body of the explosive, but in layers parallel to the surface. It is quite slow in its action, often proceeding thousands of times more slowly than the decomposition of the high explosive. The action of the low explosive is therefore less shattering.

The production of industrial explosives has shown a steady increase for many years, with an average annual increase of 6.9 percent for the ten-year period 1962-1972 (Figure 1). The U.S. Bureau of Mines maintains statistics on the use of explosives, and 1972 is the latest year for which those statistics are available (3). These statistics are reported in terms of high explosives (permissible and other); blasting agents which include ammonium nitrate-based explosives and various water gel and slurry formulations consisting of mixtures of an oxidizer and a fuel and sensitizer in an aqueous medium thickened with a gum and gelled with a cross-linking agent; and black blasting powder which includes all explosives having sodium or potassium nitrate plus sulfur and charcoal as constituents. Table 1 summarizes the most recent Bureau of Mines data on explosives production. Of the permissible explosives, ammonium nitrate compounds constitute over 70 percent of use. The high explosives used in industry are primarily dynamites. In general, commercial explosives are not applicable to military use, since they are too sensitive to impact and shock, thus presenting serious risks in handling. Further, they do not possess the necessary brisance required for military explosives.

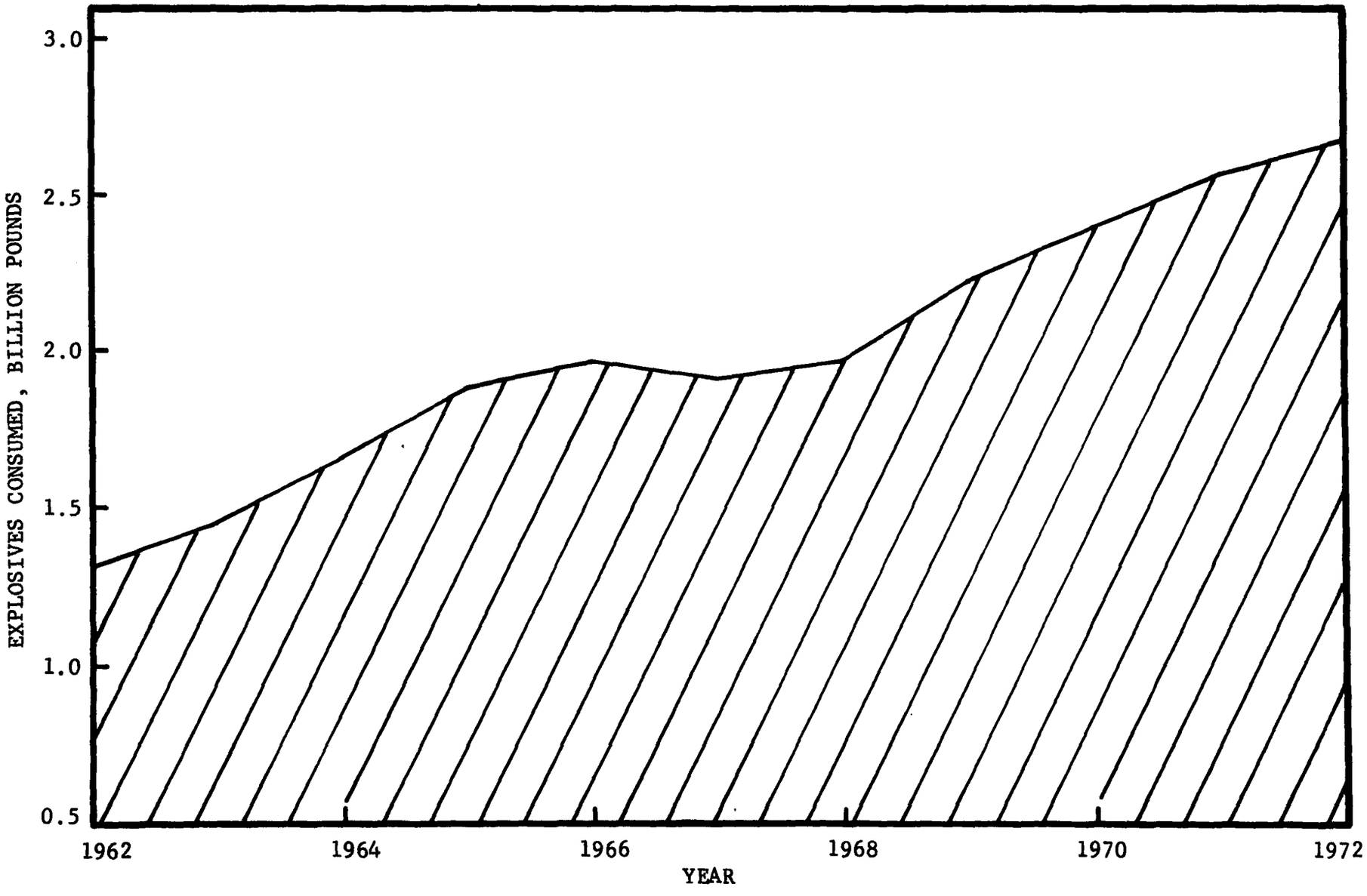


FIGURE 1. ANNUAL CONSUMPTION OF COMMERCIAL EXPLOSIVES

Table 1. Commercial Explosives and Blasting Agents Sold for Consumption in the United States (Thousand pounds)

| Class | 1971 | 1972 |
|---|---|---|
| Fixed high explosives: | | |
| Permissibles | 43,557 | 46,147 |
| Other high explosives | 272,816 | 268,798 |
| Total | 316,373 | 314,945 |
| Blasting agents: | | |
| Cylindrically-packaged | 42,967 | 226,206 |
| Water gels and slurries | 230,692 | 226,243 |
| Other processed blasting agents and unprocessed ammonium nitrate | 1,963,865 | 1,862,395 |
| Total | 2,237,524 | 2,354,844 |
| Black blasting powder: | | |
| Granular | 117 | --- |
| Pellet | --- | --- |
| Total | 117 | --- |
| Grand total | 2,554,014 | 2,669,789 |

## Commercial Explosives and Use

Table 2 summarizes the major commercial explosives, including sensitizers commonly added to low explosives. In addition, the final explosive product may contain a variety of absorbents, coating agents, fuels, oxidizers and other materials. For example, nitrocarbonitrate, among the low explosives, typically contains ammonium nitrate, mineral or fuel oil, DNT or TNT, plus an energizer. Typically, both high and low explosives involve either single organic compounds, or mixtures of organic compounds, and inorganic salts. The first group includes (1) esters of nitric acid and polyhydric alcohols such as nitroglycerin, nitroglycol and pentaerythritol tetranitrate, (2) carbohydrates such as nitrocellulose and collodion cotton, (3) nitro compounds (e.g., dinitro- and trinitrotoluene), and (4) alicyclic compounds like cyclotrimethylene trinitroamine (4). Explosives such as nitrocellulose, TNT and pentaerythritol tetranitrate (PETN) are predominantly produced for military uses, although they do have some limited application as supplemental ingredients in commercial explosives.

Table 3 indicates that over 97 percent of all commercial explosives use is related to mining and construction activities. Mining alone typically accounts for up to 80 percent of commercial explosives consumption, with coal mining comprising half or more of the mining use. Explosives usage in coal mining has increased rapidly in recent years owing to the marked expansion in strip mining, where thicker overburdens are encountered each year (5). This gain in strip mining use has more than compensated for decreased explosives consumption in underground coal mining in which the use of continuous mining machines, with virtually no explosives requirements, is growing at a fast pace (6).

The discovery of nitroglycerin and nitrocellulose shortly before 1850 and the invention of dynamites and the mercury fulminate blasting cap soon thereafter initiated an era of high explosives use. Nitroglycerin is obtained by nitrating glycerin with a mixture of nitric and sulfuric acids. Nitroglycerin is a liquid similar in appearance to the original glycerin. It is extremely sensitive to impact, and freezes at 56°F. To make nitroglycerin easier and safer to handle, it is usually

Table 2. Major Commercial Explosives

A. Primary High Explosives
- Blasting Caps
- Detonating Cords
- Electric Matches
- Lead Azide
- Mercury Fulminate
- Safety Fuses

B. Secondary High Explosives
- Dynamites
- Nitroglycerin
- Pentaerythritol Tetranitrate (PETN)

C. Low Explosives
- Ammonium Nitrate (Prilled or Grained)
- Ammonium Nitrate-Fuel Oil Mixtures (ANFO)
- Black Powder
- Nitrocarbonitrates
- Smokeless Powder
- Water Gels and Slurries

D. Low Explosives Sensitizers
- Amine Nitrates
- Dinitrotoluene (DNT)
- Trinitrotoluene (TNT)

Table 3. Percentage Distribution of Commercial Explosives Use (3)

| Year | Coal Mining | Quarrying and Non-metal Mining | Railroad and Other Construction | Metal Mining | Seismographic Exploration | Other Purposes |
|---|---|---|---|---|---|---|
| 1963 | 34.7 | 22.0 | 21.0 | 17.4 | 4.2 | 0.7 |
| 1964 | 33.0 | 21.7 | 19.9 | 19.1 | 5.5 | 0.8 |
| 1965 | 31.6 | 19.7 | 21.8 | 18.9 | 7.4 | 0.6 |
| 1966 | 31.4 | 20.1 | 22.2 | 17.9 | 7.7 | 0.7 |
| 1967 | 34.7 | 21.5 | 21.7 | 17.2 | 4.5 | 0.4 |
| 1968 | 35.1 | 20.4 | 21.1 | 20.7 | 2.1 | 0.5 |
| 1969 | 36.8 | 19.7 | 20.0 | 21.1 | 1.8 | 0.6 |
| 1970 | 40.2 | 19.0 | 18.7 | 20.0 | 1.1 | 1.0 |
| 1971 | 42.0 | 19.2 | 18.7 | 17.9 | 0.7 | 1.5 |
| 1972 | 45.4 | 18.5 | 17.5 | 16.1 | 0.7 | 1.8 |

manufactured into dynamite.

Modern dynamites generally use wood flour, ammonium nitrate or sodium nitrate as the agent employed to absorb the nitroglycerin. Many other materials may also be added, including oxidizers, and agents such as ethylene glycol dinitrate to lower the freezing point of the nitroglycerin. Table 4 lists typical ingredients of dynamites. The final ingredients and their proportions depend upon the specifications for its use. Nitroglycerin content of the dynamite may range from as little as 15 percent, up to 75 percent and still retain its solid form. Nitrocellulose is gelatinized by nitroglycerin, and the resulting firm jelly is an exceptionally powerful high explosive commonly known as gelatin dynamite. Much of the dynamite use is in quarrying and construction work. This use has declined slightly in recent years, as ammonium nitrate and water gel explosives have become more widely used.

Pentaerythritol tetranitrate is one of the most brisant and sensitive high explosives. PETN is synthesized by the nitration if pentaerythritol with concentrated nitric acid. For use as a booster explosive, a bursting charge or a plastic demolition explosive, it is frequently desensitized by admixture with TNT or by addition of wax. Its use is extremely limited in industrial applications, typically to manufacture of detonating cord.

Ammonium nitrate-based explosives have almost completely replaced the majority of other commercial explosives in the surface mining, quarrying and construction industries (1). Figure 2 shows that in 1972, ammonium nitrate explosives represented almost 80 percent of the total commercial explosives use, and that this was up from 61 percent in 1962. Thus, much of the increase in use of explosives in recent years (Figure 1) is directly attributable to increased utilization of ammonium nitrate compounds.

Ammonium nitrate explosives may be manufactured in several formulations. The U.S. Bureau of Mines distinguishes between unprocessed and processed ammonium nitrate explosives as follows. The unprocessed ammonium nitrate product is about 99.5 percent ammonium nitrate, with a small amount of surface active agent added to prevent caking. The

Table 4. Common Ingredients of Dynamites

| |
|---|
| Nitroglycerin |
| Ammonium Nitrate |
| Sodium Nitrate |
| Sodium Chloride |
| Sulfur |
| Nitrocellulose |
| Phenolic Resin Beads |
| Bagasse |
| Sawdust and Wood Flour |
| Coal |
| Corn Meal and Corn Starch |
| Trace Inorganic Salts |
| Grain and Seed Hulls and Flours |

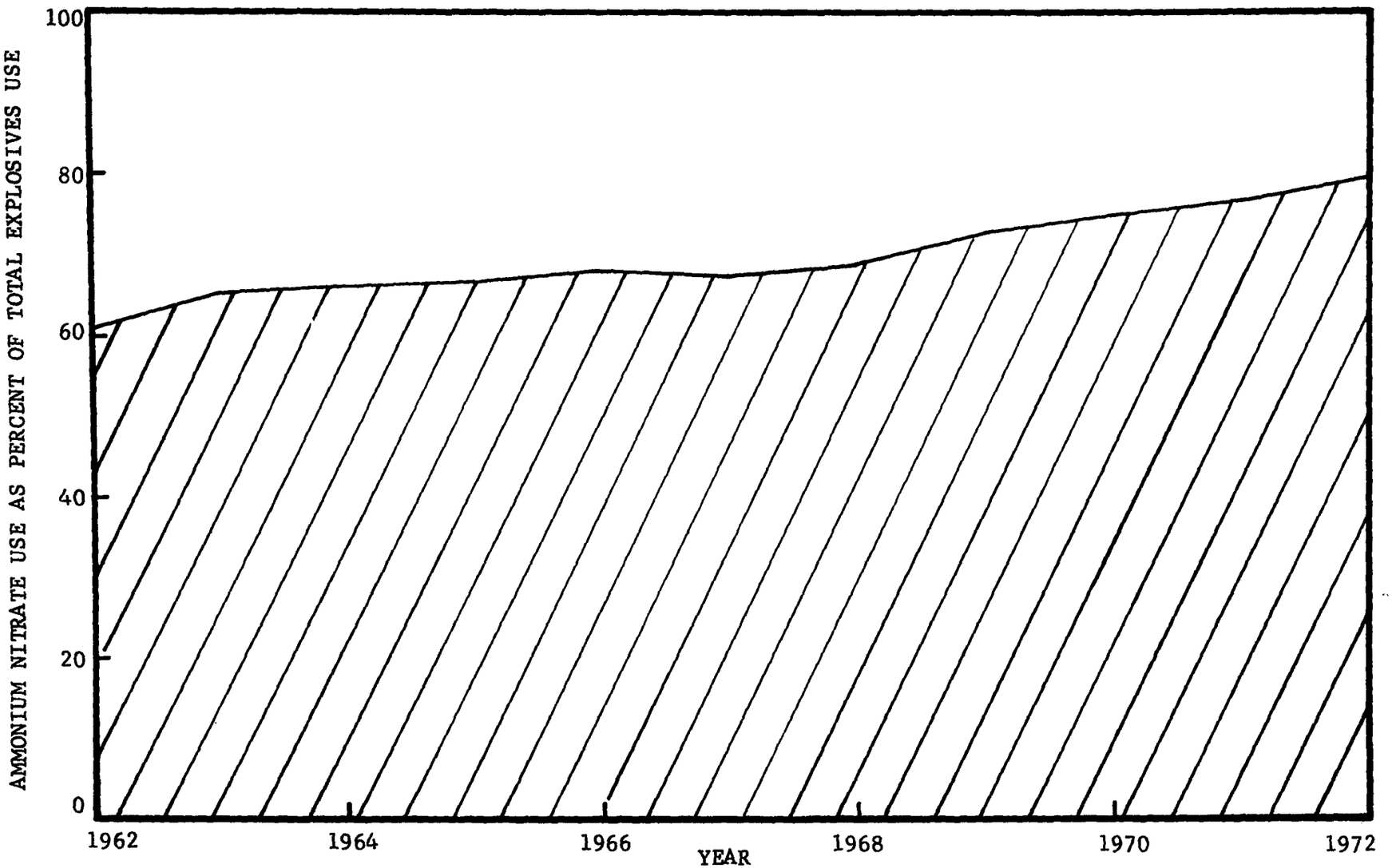


FIGURE 2. AMMONIUM NITRATE-BASED EXPLOSIVES CONSUMPTION AS PERCENTAGE OF TOTAL ANNUAL COMMERCIAL EXPLOSIVES CONSUMPTION.

unprocessed ammonium nitrate is usually prilled or grained, and is mixed with a carbon fuel (typically fuel oil), often on-site, before use as a blasting agent (3). Processed ammonium nitrate is ammonium nitrate that is premixed with a carbon fuel usually 6 percent fuel oil plus 94 percent ammonium nitrate (the product being called ANFO), and is supplied in bulk or in bags or cylinders. The bags or cylinders of ANFO are loaded directly into the blast hole.

ANFO was introduced as an explosive in the mid-1950's, and by 1972 constituted 79.7 percent of the total commercial explosives use. ANFO frequently contains powdered aluminum at up to 5 percent by weight, plus the ammonium nitrate, carbon fuel (oil), and small amounts of stabilizers and inhibitors. Larger plants which produce ammonium nitrate-based explosives frequently include an ammonia production facility. Smaller ANFO plants, located near mining fields, are typically blending facilities only, receiving unprocessed ammonium nitrate and fuel oil in bulk shipments. These constituents are blended to customer specification, and the product ANFO transported by truck to the mine fields.

Water gels and slurries were introduced as industrial explosives in 1960, and have rapidly expanded in use since (Figure 3). Water gels and slurries can have an almost infinite number of formulations, but are basically mixtures of an oxidizer and a fuel and sensitizer in an aqueous media thickened with a gum and gelled with a cross-linking agent. The water content ranges from 5 to 40 percent, but averages 15 percent (3). In most slurries and water gels, ammonium nitrate is the primary oxidizer, although sodium nitrate is often added when more available oxygen and a higher density is required. The U.S. Bureau of Mines reports that a typical blasting agent in this class contains 15 percent water, 60 percent ammonium nitrate, 10 percent sodium nitrate and the balance in other materials (3). Table 5 presents common ingredients of water gels and slurries.

Nitrocarbonitrate (NCN) blasting agents, first introduced in 1935, have very limited use, primarily for seismic exploration. NCN is similar in constituents to ANFO, and may contain in addition mineral oil, sodium nitrate and dinitro or trinitrotoluene, plus various proprietary ingre-

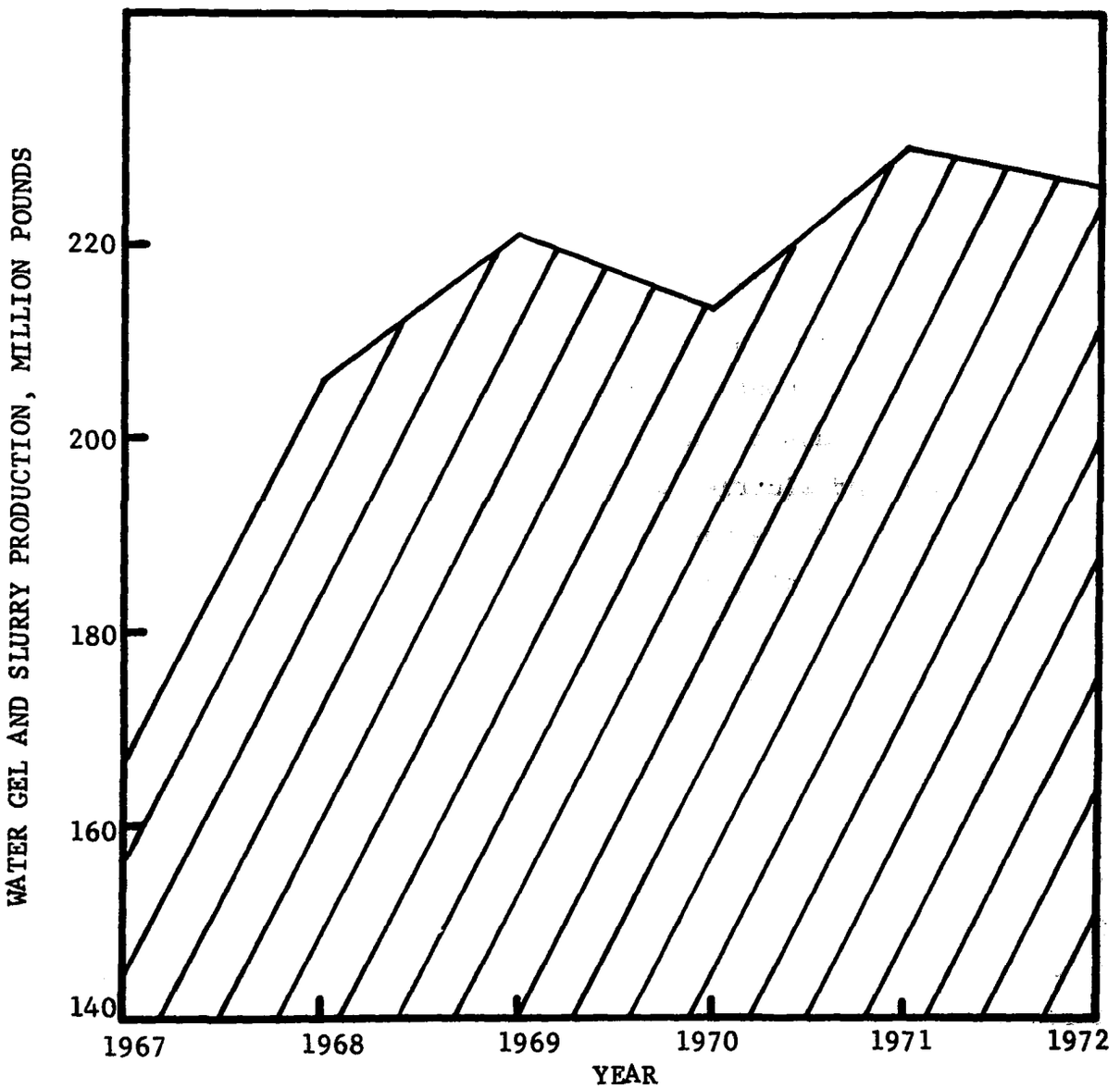


FIGURE 3. ANNUAL PRODUCTION OF WATER GEL AND SLURRY EXPLOSIVES.

Table 5. Typical Ingredients of Water Gels and Slurries

| |
|---|
| Ammonium Nitrate |
| Sodium Nitrate |
| Fuel Oil (opt.) |
| Guar Gum |
| Water |
| Aluminum Powder (opt.) |
| Smokeless Powder (opt.) |
| Nitroglycerin (opt.) |
| Trinitrotoluene (opt.) |
| Proprietary Agents (opt.) |
| Carbon Fuel (opt.) |
| Gelling Agents |

Table 6. Typical Ingredients Involved in the Manufacture of Smokeless Powder

| |
|---|
| Nitrocellulose |
| Diphenylamine |
| Ethyl Acetate |
| Dibutyl Phthalate |
| Nitroglycerin |
| Animal Colloids |
| Alcohol |
| Diethyldiphenyl Urea |
| Potassium Nitrate |
| Graphite |

dients in trace amounts.

Smokeless powder, first manufactured in 1867, is colloided nitrocellulose containing about 1 percent diphenylamine to improve its storage life and a small amount of plasticizer such as dibutyl phthalate (1). Smokeless powder has primary use as a propellant in ammunition, although it is added in small quantities to other explosives such as water gels and slurries and (as nitrocellulose) to some dynamites. In the manufacture of smokeless powder, cotton or specially prepared wood pulp is nitrated with concentrated nitric acid. After purification the nitrated cellulose is disintegrated, then "colloidized" by mixing with alcohol, ether, diphenylamine or other modifying agents. Colloiding the nitrocellulose transforms it into a dense uniform mass with reduced surface, providing greater rapidity of explosion (1). Table 6 lists typical ingredients involved in smokeless powder manufacture.

Two explosives which previous to 1970 held significant positions in commercial application have, for all practical purposes, ceased to be used. These explosives are black blasting powder and liquid oxygen explosives. Liquid oxygen explosive consists of bagged carbon black soaked in liquid oxygen (6). Used solely for strip coal mining, and only in Illinois, its use increased rapidly from 1963 to 1966, but this explosive had ceased to be used by 1968 (Figure 4), and is no longer produced. Liquid oxygen explosives have now been replaced by ammonium nitrate formulations, including water gels and slurries.

Black blasting powder use has also declined rapidly in recent years, and its direct commercial application ceased during 1971 (5). Its primary use today is limited to safety fuses. Other applications have been surplanted by ANFO and water gels and slurries.

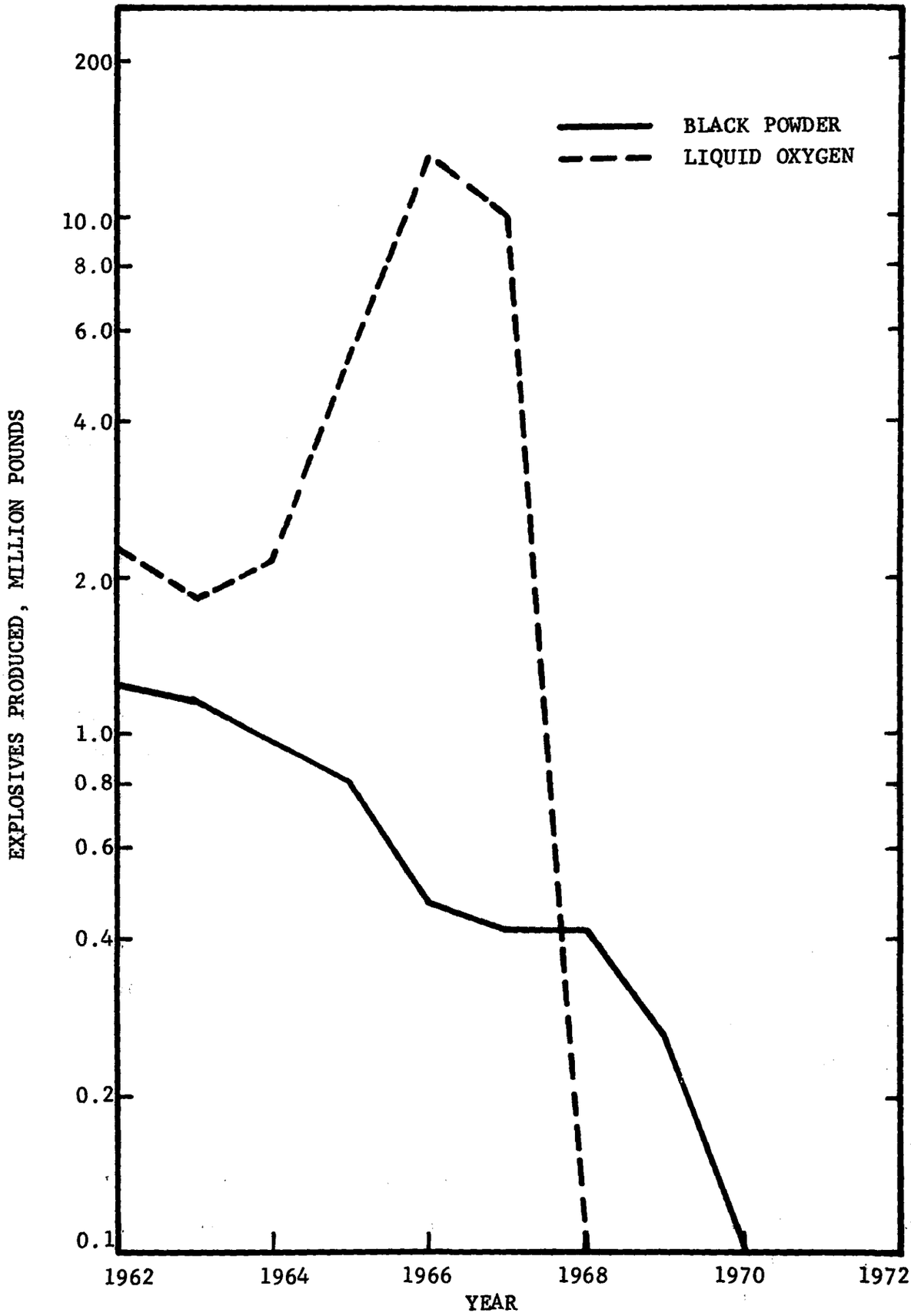


FIGURE 4. PRODUCTION OF BLACK POWDER AND LIQUID OXYGEN EXPLOSIVES.

## VI. EXPLOSIVES PRODUCTION TECHNOLOGY

In addition to the final explosives products, many of the larger explosives plants manufacture selected intermediates or ingredients of explosives formulations. On-site production of ammonia, weak and strong nitric acid, and ammoniumnitrate is particularly common, although some plants purchase these materials in bulk. Although the manufacture of ammonia, nitric acid or ammonium nitrate is not unique to the explosives industry, their production does contribute to waste loads where these processes are a part of the plant complex. In order to understand the nature and sources of these wastes, the production technology for ammonia, nitric acid and ammonium nitrate, as well as the major explosives products among those previously listed in Table 2, will be described.

A. Ammonia. The manufacture of ammonia requires natural gas, air and steam. Figure 5 is a schematic representation of the process. In the first step, the three reactants are catalytically reformed to yield nitrogen, hydrogen, carbon monoxide and carbon dioxide gases. The carbon monoxide and carbon dioxide represent impurities, which are scrubbed from the effluent gas of the reforming process, typically after oxidation of carbon monoxide to carbon dioxide. The purified nitrogen plus hydrogen gas is then catalytically reacted in a synthesis process to yield ammonia, which is taken to storage as either a gas or aqueous solution. Cooling is required at all steps in the ammonia manufacture, and condensate is normally discharged as a waste flow.

B. Nitric Acid - Manufacture and Recovery. Many explosives plants manufacture weak and strong nitric acid for their own uses, and a few explosives plants incorporate spent nitric acid recovery processes as well. The principle uses of nitric acid in explosives manufacture are for production of nitroglycerin, ammonium nitrate, nitromannite (a component of blasting caps) and pentaerythritol tetranitrate(PETN). Weak (55-60%) nitric acid is used to produce ammonium nitrate as well as concentrated (98%) nitric acid, which is used for the other explosives products listed above.

Weak nitric acid is produced by catalytic oxidation of ammonia with

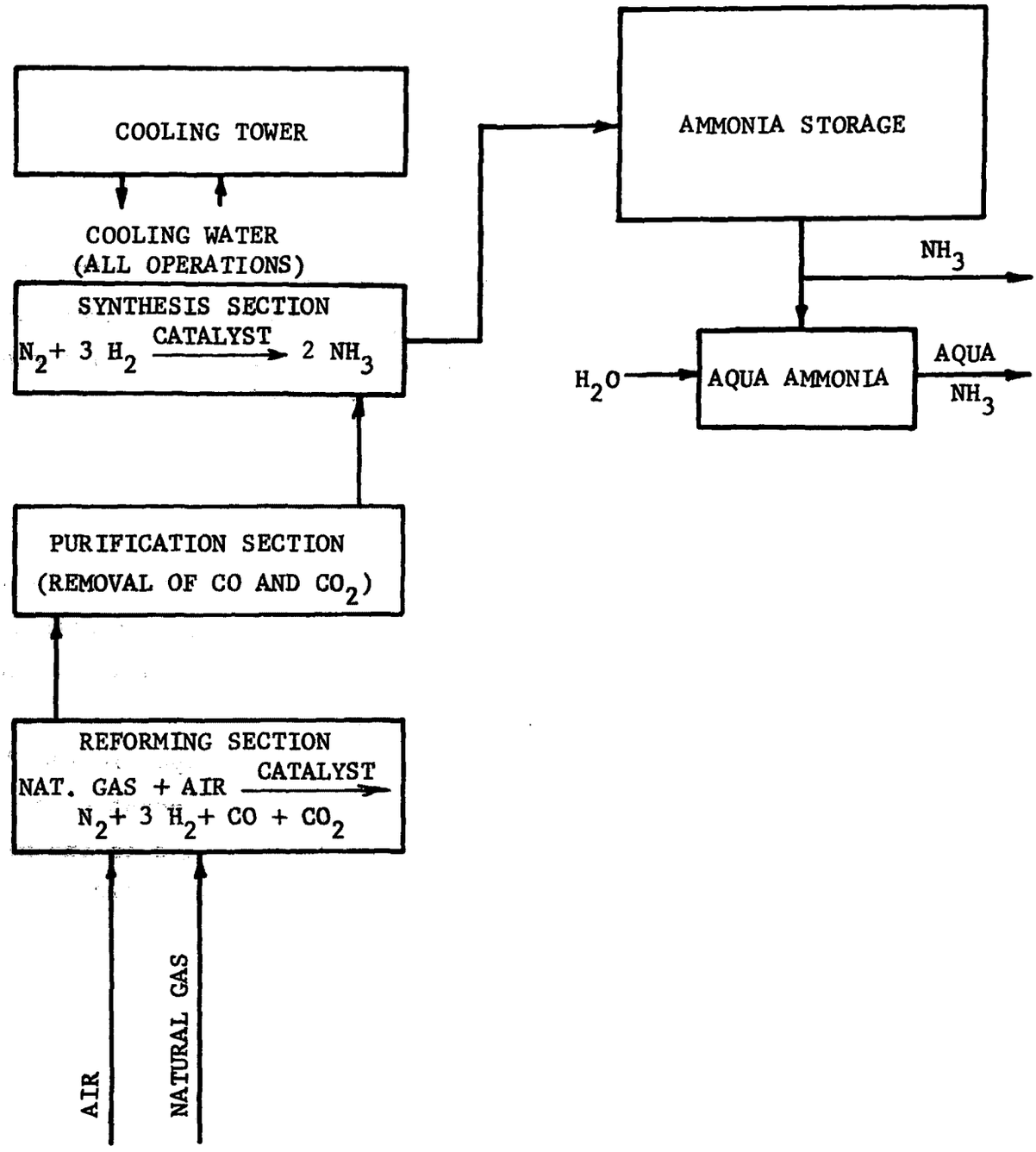


FIGURE 5. AMMONIA PRODUCTION DIAGRAM

atmospheric oxygen to produce nitrous oxides (NO and $NO_2$). In the process (see Figure 6), anhydrous ammonia is vaporized, mixed with preheated air, and passed through a platinum gauge catalyst. The ammonia is thereby oxidized to oxides of nitrogen. After cooling the gases pass through a water absorption column where weak nitric acid is formed, with venting of $N_2$ and $NO_x$ to the atmosphere. The acid is then either used for ammonium nitrate production, or further concentrated to yield strong nitric acid.

Since most explosives nitration reactions require concentrated nitric acid, the weak acid from the platinum catalysis process must be concentrated to 95-98%. In the process, weak nitric acid is mixed with concentrated sulfuric acid (oleum), heated, and pumped through a dehydration tower under vacuum to pull off nitric acid, water vapors and nitrogen oxides. The sulfuric acid effluent from the tower flows through a cascading series of steam heated boiler tubes, to drive off residual contaminants, which are returned to the dehydration tower. The nitric acid vapor from the dehydration tower is condensed to yield concentrated acid, while the nitrogen oxides are taken to the weak nitric acid production facility. The spent sulfuric acid is either discharged, reprocessed on-site, or sold for reprocessing and recovery. Figure 7 is a schematic of the nitric acid concentration process.

Spent nitrating acid from processes such as nitroglycerin and PETN manufacture are frequently processed by the explosives industry to recover nitric acid. The recovery process is incorporated in the nitric acid concentration line, with spent nitrating acids being bled into the dehydration tower along with the weak nitric plus concentrated sulfuric acid mixture.

C. Ammonium Nitrate. Ammonium nitrate is used primarily in granular or "prill" form in explosives. Anhydrous ammonia and weak nitric acid are reacted at 300°F to yield concentrated (99%) ammonia nitrate. This solution is discharged to water-colled stainless steel crystallizer bowls or belts, where it is cooled to form a crystalline ammonium nitrate cake. The cake is ground or crushed and screened. Various additives, including wax to coat the prill, and fullers' earth for moisture control

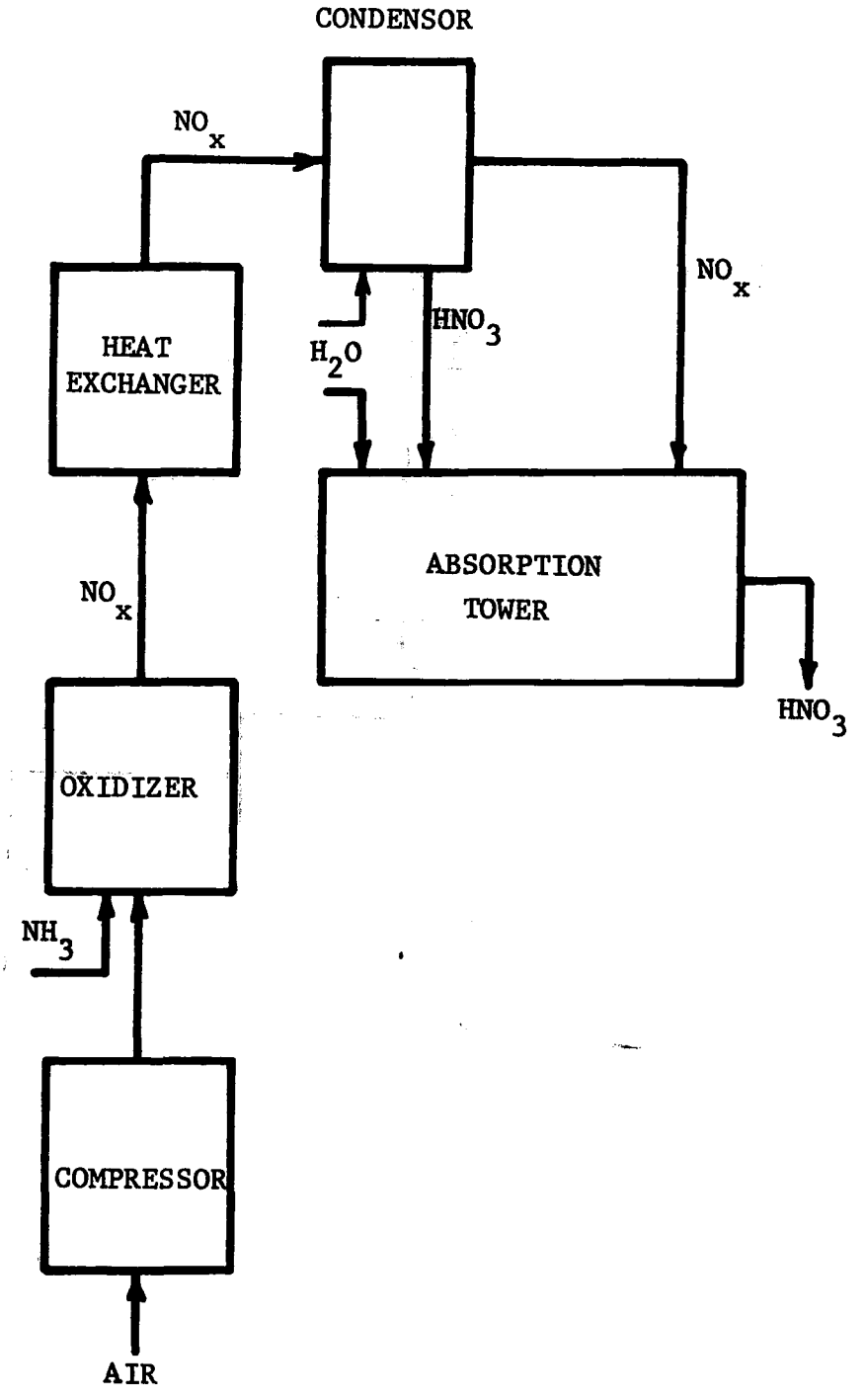


FIGURE 6. NITRIC ACID PLANT

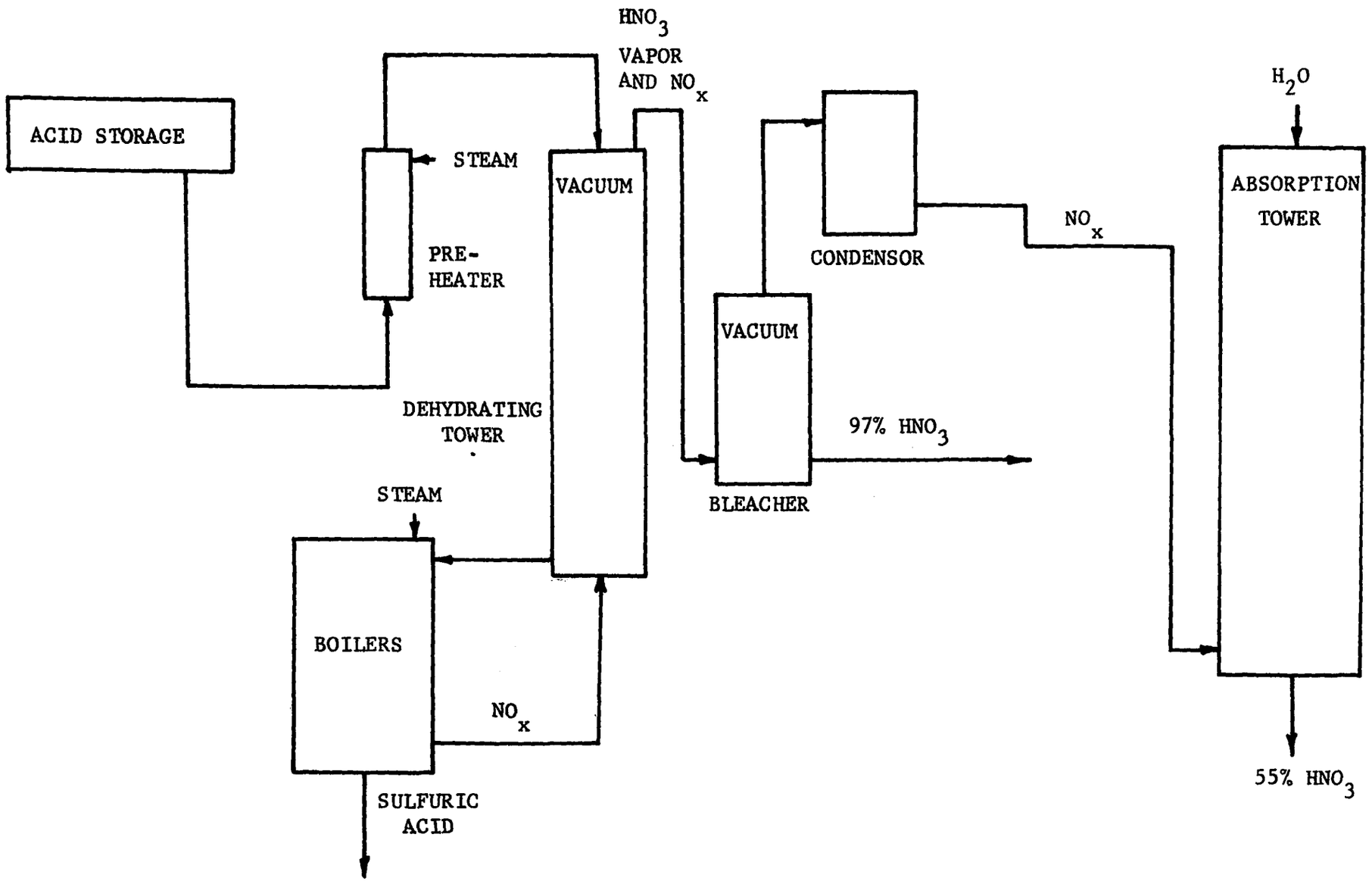


FIGURE 7. NITRIC ACID CONCENTRATOR PLANT

are blended in, and the product stored.

D. Nitroglycerin. Nitroglycerin (NG) is synthesized in a batch reactor, by controlled reaction between a concentrated sulfuric acid - concentrated nitric acid solution and a mixture of ethylene glycol and glycerin (Figure 8). The reactor contains cooling coils through which circulate a cooled brine solution. The reactor is initially charged with the nitrating acid mixture. The glycerin-glycol solution is then added, at a rate that maintains a temperature of 40°F in the reactor. This rate is dependent upon ambient temperature and the cooling brine temperature, which rises during the day. Consequently, reaction time varies as the cooling capacity varies. Lower temperatures are also dangerous, as solid nitroglycerin is very shock-sensitive and could be detonated by the reactor mixing system.

The reacted product (a mixture of NG, ethylene glycol dinitrate, water and spent sulfuric and nitric acid) passes into a gravity separator tank where the spent acid is drawn from the bottom of the mixture and either discharged or sent to acid recovery. The nitroglycerin is then dropped into a prewash tank and mixed with water. The resulting "sour water" is removed from the top and goes to a catch tank. Occasionally, sodium fluorosilicate is added at this point to break the water - NG emulsion. The NG is drained from the catch tank and sent to two neutralizer tanks. In the neutralizer tanks the NG is emulsified with a soda ($Na_2CO_3$) water solution. After a final wash with water the NG is taken by rubber lined channels or wheeled carts to the dynamite formulation building. Ethyl acetate, a desensitizing-carrier solvent is sometimes mixed with the NG, when it is to be stored for a period of time.

E. Dynamites. There are many different formulations of dynamites, although the basic ingredients are nitroglycerin and ammonium nitrate. Ammonium nitrate is first mixed in batch with various minor ingredients. The most common of these were listed in Table 4. Other minor ingredients may also be added, but are considered proprietary by the manufacturers of dynamites. This mixture forms a "dope", to which the nitroglycerin is added. The proportions of nitroglycerin and ammonium nitrate, and the specific minor ingredients and their proportions, determines the

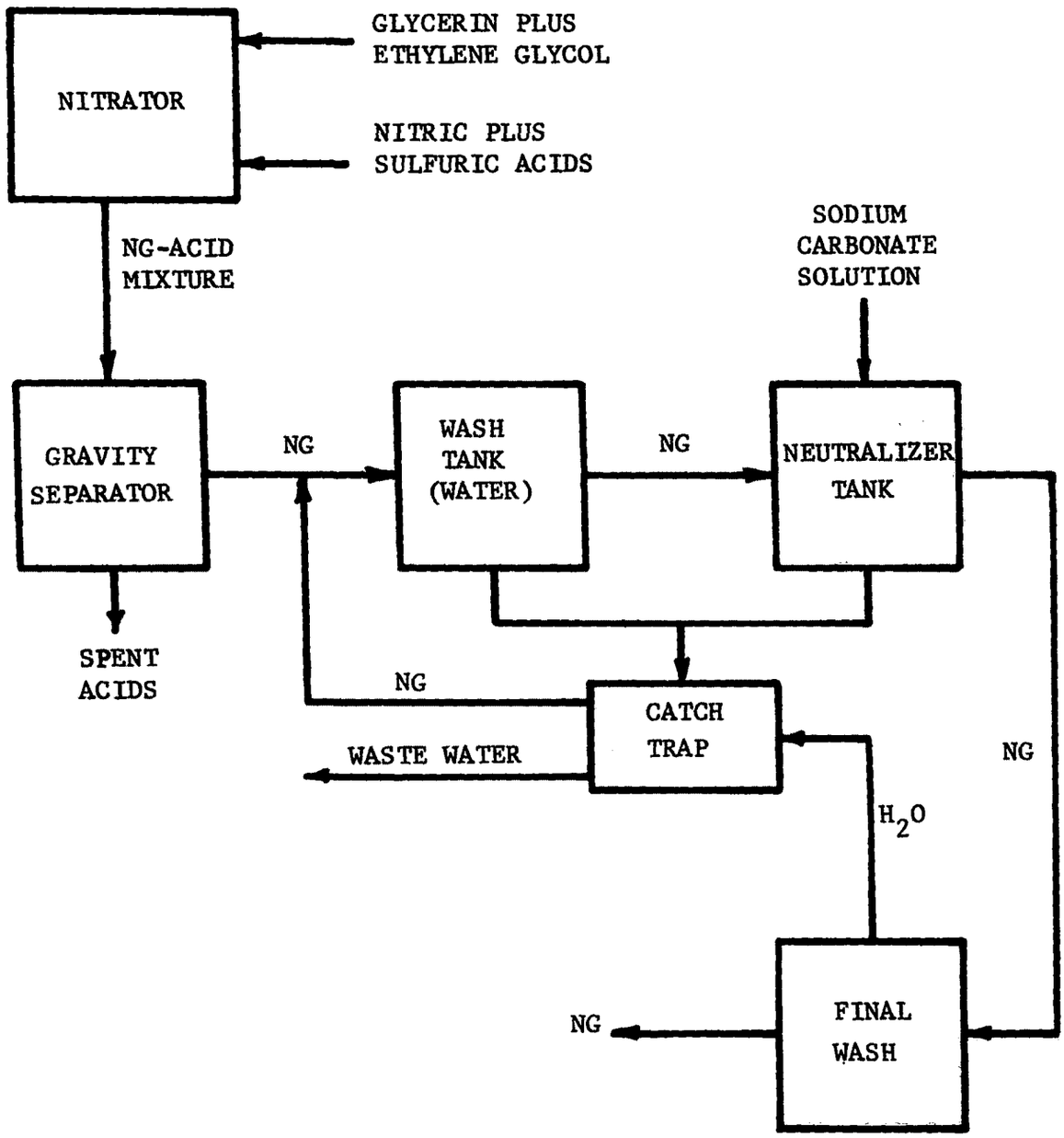


FIGURE 8. NITROGLYCERIN PRODUCTION SCHEMATIC

particular properties of the dynamite. Many dynamites are formulated to customer specification. After formulation, the dynamite is transported to a cartridging house for packaging into waxed cardboard or plastic tubes, and then shipped or stored in magazines. A typical dynamite formulation is shown in Table 7.

F. Smokeless Powder. This product, used as a cartridged propellant, incorporates as its primary ingredients nitroglycerin and nitrocellulose. Other ingredients are listed in Table 6. Two smokeless powder lines were visited during this study. They were similar in their operations, and the following description represents an overview of the two processes. In both cases, nitrocellulose is obtained from an outside supplier.

Figure 9 presents an overall schematic of the smokeless powder manufacturing process. Supplemental operations include NG manufacture and nitrocellulose recovery. For recovery, scrap powder is stored as a water slurry. Overflow from storage, when capacity is exceeded, goes to waste. Recovery involves extraction of nitrocellulose from the scrap powder with benzene plus ethyl acetate solvent. This solubilizes contaminants, which are evaporated to precipitate, and incinerated. Residual water is decanted as waste. The solvent evaporant is recondensed in a water-cooled unit. The purified nitrocellulose is mixed with water, and the slurry returned to the manufacturing line.

In the specific operations of base grain preparation and size separation, the extracted powder, as a water slurry, is passed over a vibrating table to remove grit, and screened to remove oversize particles. Both processes use water. Centrifugation follows, with the excess water becoming a part of the waste flow. Diphenylamine and ethyl acetate are added, along with hot water, to form a dough-like mixture of nitrocellulose. This is pressed through screens and chopped, to form grains which pass into a jacketed steam chamber for drying and shaping into balls. The solvent is removed by evaporation, and recovered. Filtration and screening follow. The resultant grain is taken to storage. Filter backwash water is discharged.

G. Ammonium Nitrate - Fuel Oil (ANFO) Mixtures. ANFO is a mixture of ammonium nitrate prills and fuel oil, to which a variety of other

Table 7. Typical Composition of Dynamite

| Component | Percent, Wt. |
|---|---|
| Ammonium Nitrate | 50-55 |
| Nitroglycerin | 15-18 |
| Sodium Nitrate | 0-17 |
| Trace Ingredients | 10-35 |

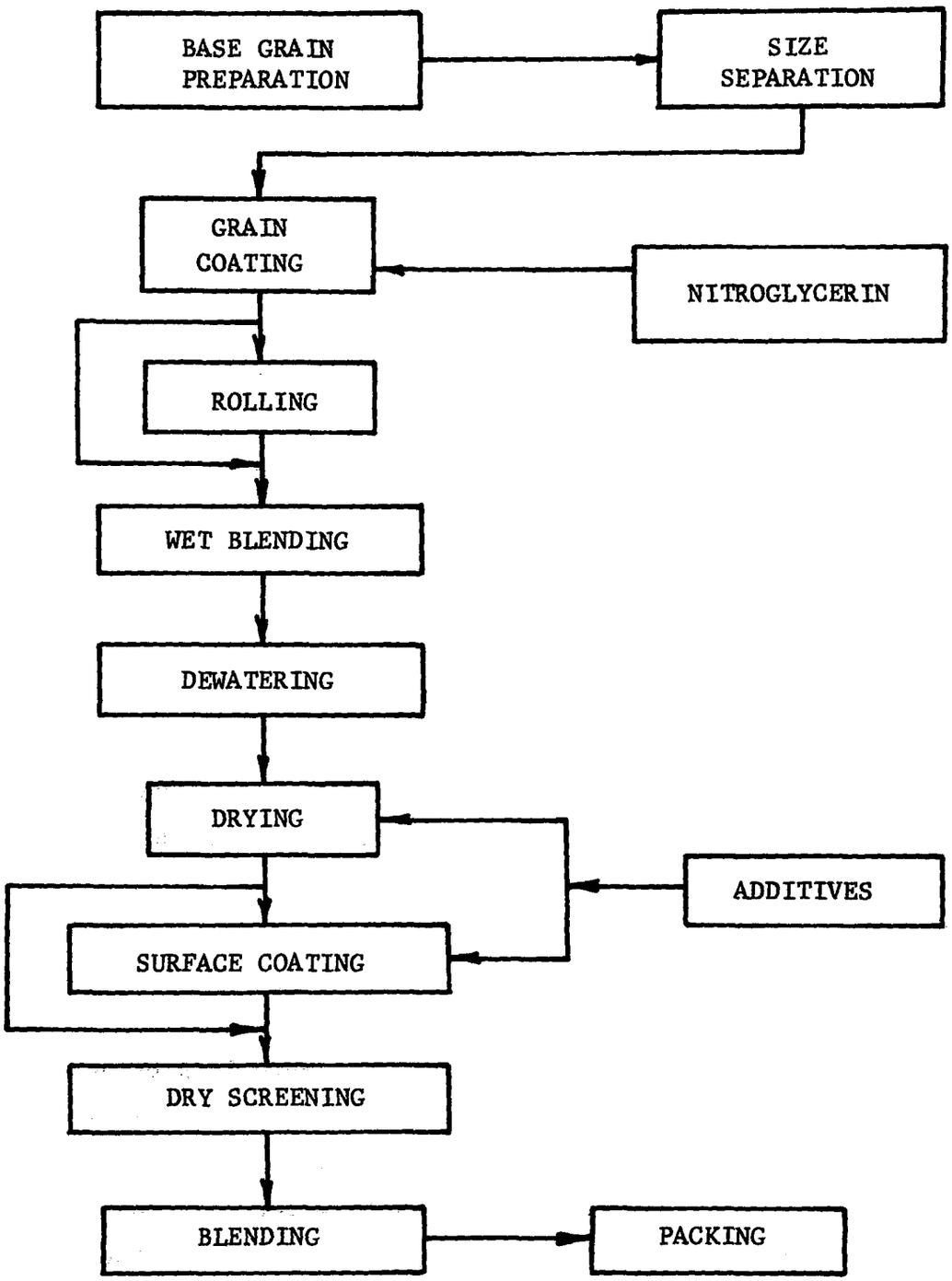


FIGURE 9. SMOKELESS POWDER PROCESS FLOW CHART

minor ingredients (Table 8) may be added. This includes, in some instances, powered aluminum at up to 5 percent by weight. ANFO is formulated as a batch or continuous dry mixing operation, and the only wastewater source results from clean-up of spills and equipment. Occasionally the fuel oil (#2) is dyed prior to mixing with ammonium nitrate, to identify specific formulations. The product is bagged in paper, plastic or burlap, depending upon the intended use.

H. Nitrocarbonitrates. These explosive products are similar in composition and manufacture to ANFO. In addition to or in place of fuel oil, the product may also contain mineral oil. Aluminum powder is a common ingredient, as well as dinitrotoluene (DNT), and routine ANFO ingredients listed in Table 8. The formulation is a dry batch mix, with wastewater restricted to clean-up of spills and equipment. Crude DNT is purchased from outside suppliers.

I. Water Gels and Slurries. Water gel manufacture is a batch process involving mixing of ammonium nitrate, sodium nitrate and other ingredients listed in Table 5 to form a semi-solid product. Guar gum is added to provide binding. The product may be bagged, or shipped in bulk by truck for on-site injection. A gelling catalyst such as chromate is injected when water gel is used in bulk on-site. Bagged products do not incorporate the catalyst. Wastewater from the product originates only from clean-up of spills, mixing equipment and bulk transport trucks. Certain water gel formulations include proprietary supplemental components as explosive boosters. These supplemental ingredients are classified as proprietary by the manufacturers.

J. Pentaerythritol Tetranitrate (PETN). Figure 10 provides a schematic of PETN production. The pentaerythritol is nitrated with concentrated nitric acid, and PETN separated in a centrifuge. Spent acid is recovered. The PETN cake is mixed with water, and the slurry filtered to removal residual acid. The crystalline PETN is then dissolved in acetone, with sodium carbonate added to further neutralize residual acidity. After graining with water, the slurry is again filtered, and the granular PETN taken to storage. The acetone-water filtrate is digested with sodium hydroxide at pH 10 and 210$^{o}$F, to

Table 8. Ingredients of ANFO Explosives

| | |
|---|---|
| Ammonium Nitrate | Fuel Oil |
| Ferrophosphate | Aluminum |
| Calcium Silicate | Coal |
| Atticote | Mineral Oils |

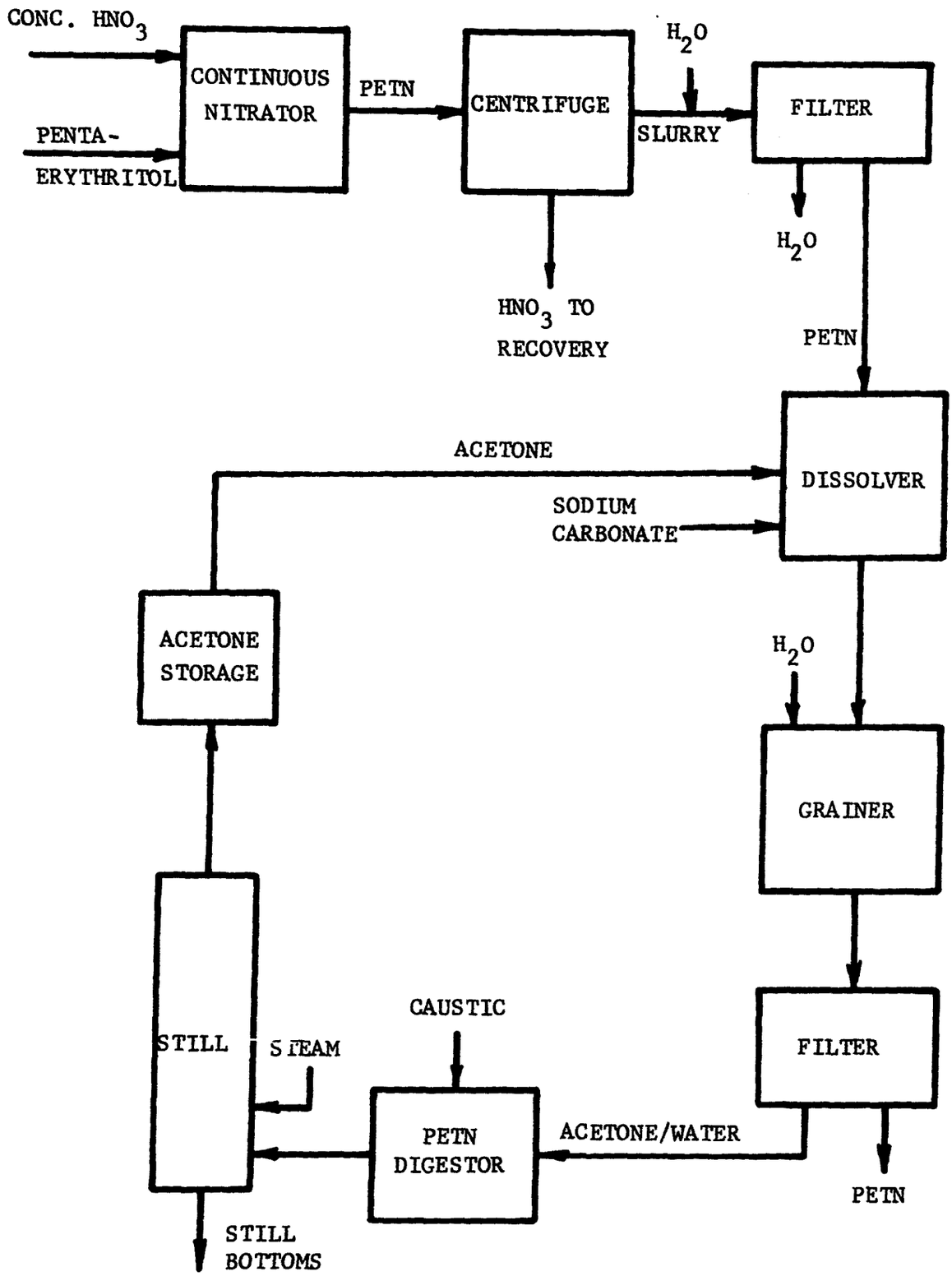


FIGURE 10. PETN PRODUCTION AND ACETONE RECOVERY

destroy residual PETN, and the acetone recovered by distillation. Still bottoms are discharged as waste. Other wastewaters result from the first wash of PETN after centrifugation, to remove residual acid.

## VII. WASTEWATER CHARACTERIZATION

The explosives industry, for purposes of wastewater characterization, should be divided into three categories:

1. Complex Facilities, representing large manufacturing complexes which both manufacture intermediates and blend them into explosives formulations. Typically these plants will manufacture ammonia, nitric acid, ammonium nitrate and nitroglycerin plus other intermediates, and formulate dynamites, smokeless powder, ANFO, water gels and other similar explosives products. Individual complex facilities may purchase certain intermediates, and may not formulate all explosives.

2. On-Site or Near-Site Mixing Plants, which receive explosives ingredients in bulk, and mix these ingredients to formulate explosives products meeting nearby customer specifications. In select cases, minor ingredients may be manufactured at these plants, but bulk materials such as ammonium nitrate are shipped in. The predominant products of on-site plants are ANFO and water gels and slurries.

3. Specialty Plants, which manufacture only select ingredients or explosives products, to be shipped elsewhere for final formulation into explosives. These select products include lead azide and other explosives initiators, blasting caps, electric matches and similar appurtenance items.

The majority of explosives plants fall into the first two of the above categories, and consequently more data was available for this study from the complex facilities and on-site plants then for the specialty plants.

Considering first water use and wastewater discharge volumes associated with explosives manufacture, Tables 9 and 10 summarize such data as was obtained from plant visits, and review of available discharge permit application and plant operating records. Average water use for the eight complex plants (Table 9) for which data was available was 1.23 MGD, and on a production basis 18,297 gallons per ton of final explosives product. This compares with averages (Table 10) of 0.0082 MGD and 719 gallons per ton of product for on-site facilities. Average production for the plants of Tables 9 and 10 were 80.6 and 25.0 tons of explosives per day, respectively. This production differential reflects more the complexity of processing than relative plant size. The on-site plants are normally quite small facilities, involved only with batch blending of bulk ingredients. The complex facilities, in using the most basic raw materials, are usually large plants with many production steps prior to final explosive product formulation.

Wastewater discharge volumes, for complex facilities and on-site plants respectively, were 0.91 and 0.0074 MGD, and 13,462 and 514 gallons per ton of product. The average wastewater volume represents 74.2 percent and 89.5 percent of total water use for complex and on-site plants. This difference in volume results from omission of sanitary sewage flow from the wastewater volume, and from water losses due to evaporation, boiler make-up, and water incorporated into explosives products. Table 11, showing the distribution of water use for complex and on-site facilities, indicates that sanitary plus boiler make-up water use averages 21.5 percent and 47.6 percent respectively for the two manufacturing categories.

Inspection of the data of Tables 9 and 10 reveals that there is wide variation in the production-based water use and wastewater discharge volumes for both complex and on-site plants. Most plants provide their own water supply from surface or ground water sources, and utilize cooling and process water only on a once-through basis. Zimmerman (7) has reported that the national average water use in the explosives industry is 284,000 gallons per ton of product. However, the data generated in this study does not support that claim, and yields an industry-wide average of 10,973 gallons per ton.

Table 9. Complex Plants: Water Use and Wastewater Volumes

| Plant | Water Use | | Wastewater Discharge | |
|---|---|---|---|---|
| | MGD | Gal./Ton Prod.[1] | MGD | Gal./Ton Prod.[1] |
| CV.01 | NA | NA | 0.240 | 3,002 |
| CV.02 | 0.38 | 5,279 | 0.044 | 617.0 |
| CV.03 | 3.30 | 8,878 | 2.52 | 6,779 |
| CV.04 | 1.55 | 11,081 | 1.53 | 10,928 |
| CV.05 | 0.65 | 48,148 | 0.497 | 36,814 |
| CV.06 | 0.36 | 3,600 | 0.360 | 3,600 |
| CV.07 | 0.18 | 2,880 | 0.15 | 2,400 |
| CV.08 | 2.17 | 48,222 | 1.96 | 43,555 |
| AVERAGE | 1.23 | 18,297 | 0.913 | 13,462 |

[1] Based on total tonnage of final products only.

Table 10. On-Site Plants: Water Use and Wastewater Volumes

| Plant | Water Use | | Wastewater Discharge | |
|---|---|---|---|---|
| | MGD | Gal./Ton Prod. | MGD | Gal./Ton Prod. |
| SV.01 | 0.0042 | 105 | NA | NA |
| SV.02 | 0.00545 | 170 | 0.00545 | 170 |
| SV.03 | 0.01186 | 152 | 0.0230 | 295 |
| SV.04 | 0.00070 | 17 | 0.000030 | 0.74 |
| SV.05 | 0.00189 | 3,150 | 0.000955 | 1592 |
| AVERAGE | 0.00822 | 719 | 0.00736 | 514 |

Table 11. Distribution of Water Use in the Explosives Industry, Percent

| Category: Plant | Processing and Clean-up | Cooling Water | Boiler Make-up | Sanitary Use |
|---|---|---|---|---|
| A. Complex Plants: | | | | |
| DA.01 | 31.1 | 59.8 | 7.9 | 1.2 |
| DA.02 | 0.7 | 89.0 | 7.1 | 3.2 |
| DA.03 | 55.8 | 22.1 | 10.3 | 11.8 |
| DA.04 | 11.0 | 61.1 | 16.8 | 11.1 |
| DA.05 | 5.5 | 44.5 | 44.5 | 5.5 |
| DA.06 | 30.4 | 59.9 | 8.3 | 1.4 |
| AVERAGE | 22.4 | 56.1 | 15.8 | 5.7 |
| B. On-Site Plants: | | | | |
| DB.01 | 68.0 | 0.0 | 1.8 | 30.2 |
| DB.02 | 5.5 | 41.3[1] | 52.3 | 0.9 |
| DB.03 | 2.5 | 5.2[1] | 12.0 | 80.3 |
| DB.04 | 90.0 | 0.0 | 2.9 | 7.1 |
| DB.05 | 1.6 | 47.6[1] | 47.6 | 3.2 |
| AVERAGE | 33.5 | 18.8 | 23.3 | 24.3 |

[1] Cooling water associated with on-site manufacture of proprietary ingredient of explosives formulation.

Limited data on flow volume for intermediate and specialty products was generated, and is presented in Table 12. Nitroglycerin, an intermediate in the manufacture of dynamites, has an average wastewater discharge volume of 751.6 gallons per ton NG. This is primarily sodium carbonate solution and wash water used to neutralize residual acidity after the nitration process. Other intermediates shown in Table 12 include ammonia, nitric acid and ammonium nitrate. Specialty products include PETN, lead azide and blasting caps. Data was sufficiently detailed for only a few plants to enable determination of discharge volumes for manufacture of intermediate and specialty products.

The major wastewater constituents associated with explosives manufacture are nitrogen (ammonia, organic, urea and nitrate), solids, BOD, oil and grease, and certain intermediate products such as ethylene glycol, NG, PETN and DNT. In many cases, extreme pH values are encountered, due to highly acidic or alkaline process waste streams. Characteristically, the first wash water from NG manufacture is acidic, while subsequent neutralizing washes with sodium carbonate solution yield alkaline flows. High sulfate levels are also associated with NG, as well as other nitrated products, due to the use of fuming sulfuric acid with the nitric acid in the nitration process. Wastewater from specialty product manufacture may contain significant levels of heavy metals, such as lead, aluminum, copper and chromium (used as a gelling catalyst). Manufacture of certain proprietary ingredients of explosives involve the use of phenol, and wastewater from these processes may contain phenol in excess of 100 mg/l. Dust control, particularly in dynamite mix houses, usually requires exhaust systems, and particulate removal from the exhausted air by scrubbling is frequently used. This scrubber water constitutes a waste flow high in BOD, solids and nitrogen forms.

The manufacture of PETN has as one step dissolving the PETN in acetone, followed by neutralization with sodium carbonate and recrystallization of PETN by addition of water. The acetone-water solution is then filtered off, and digested with sodium hydroxide at pH 10 and 210$^{o}$F to destroy residual PETN. The acetone is recovered by distillation, while still bottoms are discharged. In the one plant practicing

Table 12. Specialty and Intermediate Product Water and Wastewater Volumes

| Product/Plants | Water Use | | Wastewater Discharge | |
|---|---|---|---|---|
| | MGD | Gal/Ton | MGD | Gal/Ton |
| NITROGEN PRODUCTS[1] | | | | |
| NP.01 | NA | NA | 0.0720 | 360.0 |
| NP.02 | NA | NA | 0.1450 | 5184.6 |
| NP.03 | NA | NA | 0.800 | 1789.7 |
| NP.04 | NA | NA | 0.940 | NA |
| AVERAGE | — | — | 0.489 | 2444.8 |
| AMMONIA | | | | |
| AM.01 | NA | NA | 0.020 | 1066.7 |
| AMMONIUM NITRATE | | | | |
| AN.01 | NA | NA | 0.0250 | 384.6 |
| NITROGLYCERIN | | | | |
| NG.01 | NA | NA | 0.0048 | 436.4 |
| NG.02 | NA | NA | 0.0200 | 1066.7 |
| NG.03 | NA | NA | 0.0042 | NA |
| AVERAGE | — | — | 0.0097 | 751.6 |
| PETN | | | | |
| PE.01 | NA | NA | 0.010 | 2857.1 |
| PE.02 | NA | NA | 0.400 | NA |
| LEAD AZIDE | | | | |
| LA.01 | 0.370 | 2,312,500 | 0.310 | 1,937,500 |
| BLASTING CAPS | | | | |
| BC.01 | 0.0880 | 2200 | NA | NA |

[1] Ammonia plus nitric acid plus ammonium nitrate.

acetone recovery, for which sufficient information was available to define the waste character of the still bottoms, the waste had the following characteristics:

| | |
|---|---|
| Flow | 6000 gpd |
| pH | 11.0 |
| Temperature, $^{o}F$ | 180 |
| $BOD_5$, mg/l | 15,510 |
| COD, mg/l | 19,620 |
| Kjeldahl-N, mg/l | 8.43 |
| Nitrate-N, mg/l | 172.0 |

The recovery process yielded 2,500 gallons of acetone per day, with a waste discharge of 310 lbs. of $BOD_5$ and 3.44 lbs. of nitrate-N per 1000 gallons of acetone recovered.

Tables 13-15 present combined wastewater discharge data for complex facilities and on-site plants. There is a great deal of variation in the waste nature of individual plants within each group, and it is probable that the data for the on-site plants is too limited to provide reliable averages. A comparison of the averages for complex and on-site plants shown in Table 13 reveals a more heavily polluted wastewater associated with the complex facilities. The pH range was 1.9-10.3, as compared with a pH range of 6.2-7.9 for the smaller (on-site) plants. Average pollutant concentration, for each parameter except suspended solids and nitrate nitrogen was at least twice as high for complex facilities. The parameters of exception, suspended solids and nitrate-N, reflect poorer solids removal and proportionally greater clean-up water use at the smaller plants.

In complex facilities, more then half of the total water use is for cooling purposes (Table 11), and this water is often combined with and dilutes the process waste flows. This likely accounts for some of the variability in concentration among plants. Although no data was available on oil and grease levels for on-site plants (Table 13), it would be expected, particularly in these plants formulating ANFO, that clean-up water would be high in oil and grease. Pollutant discharge, on a lbs.

Table 13. Raw Wastewater Concentrations for Complex and On-Site Facilities, mg/l.

| Plant | pH | BOD | COD | Total Solids | Susp. Solids | Oil & Grease |
|---|---|---|---|---|---|---|
| A. Complex Facilities: | | | | | | |
| RWA.01 | 1.9-10.3 | 1463.0 | 2323.9 | 588.3 | 73.0 | |
| RWA.02 | | | | | | 0.82 |
| RWA.03 | | 7.8 | 114.3 | 1763.8 | 19.4 | 0.01 |
| RWA.04 | 2.3-9.9 | 36.4 | 153.3 | 1118.3 | 55.9 | 11.9 |
| RWA.05 | 6.5-8.8 | 628.0 | 1175.0 | 1646.0 | 292.0 | 35.0 |
| RWA.06 | 7.3 | 29.0 | 95.0 | 1880.0 | 42.0 | 3.4 |
| RWA.07 | 2.4-9.1 | 8.0 | 30.0 | 2192.7 | 77.8 | |
| RWA.08 | 7.3-8.1 | | | | | |
| AVERAGE | 1.9-10.3 | 362.0 | 648.6 | 1531.5 | 93.4 | 10.2 |
| B. On-Site Facilities: | | | | | | |
| RWB.01 | 7.9 | 51 | 183 | | | |
| RWB.02 | 6.7 | 7 | 62 | | | |
| RWB.03 | 6.7 | 1 | 12 | 71 | 30 | |
| RWB.04 | | 300 | | | 120 | |
| RWB.05 | 6.2-7.2 | 19.9 | 112.0 | 861.6 | 398.3 | |
| AVERAGE | 6.2-7.9 | 75.8 | 92.3 | 466.3 | 182.8 | |

Table 13. Raw Wastewater Concentrations for Complex and On-Site Facilities, mg/l. (Continued)

| Plant | Total Org. N | Kjel. N | $NH_3$-N | $NO_3$-N | $NO_2$-N | Sulfate |
|---|---|---|---|---|---|---|
| A. Complex Facilities: | | | | | | |
| RWA.01 | | 417.9 | 413.5 | 714.5 | 1.8 | 21.8 |
| RWA.02 | 104.4 | | | | 2.2 | 353.5 |
| RWA.03 | 110.4 | | 93.3 | 170.9 | 1.5 | 36.9 |
| RWA.04 | | 23.6 | 22.6 | 79.0 | | 581.7 |
| RWA.05 | | | | | | |
| RWA.06 | | 230.0 | 211.0 | 267.0 | 9.0 | 27.4 |
| RWA.07 | | 6.1 | 77.1 | 92.0 | 0.3 | 315.4 |
| RWA.08 | | | | | | |
| AVERAGE | 107.4 | 169.4 | 163.5 | 264.7 | 3.0 | 222.8 |
| B. On-Site Facilities: | | | | | | |
| RWB.01 | | | 82 | 373 | | |
| RWB.02 | | | 158 | 1150 | | |
| RWB.03 | | 51 | | 0.47 | | |
| RWB.04 | | | | | | |
| RWB.05 | | 6.15 | 5.0 | 2.59 | | |
| AVERAGE | | 28.6 | 81.7 | 381.5 | | |

Table 14. Daily Pollutant Discharges for Complex and On-Site Facilities, lbs/day.

| Plant | BOD | COD | Total Solids | Susp. Solids | Oil & Grease |
|---|---|---|---|---|---|
| A. Complex Facilities: | | | | | |
| DDA.01 | 1076.2 | 1751.5 | 1257.1 | 156.0 | |
| DDA.02 | | | | | |
| DDA.03 | 163.9 | 2402.2 | 37,069.4 | 407.7 | 0.21 |
| DDA.04 | 465 | 1956 | 14,269 | 713 | 152 |
| DDA.05 | 1519 | 2866 | 3970 | 730 | 81.8 |
| DDA.06 | 72 | 238 | 4700 | 105 | 8.5 |
| DDA.07 | 10.9 | 37.5 | 2743 | 97.3 | |
| AVERAGE | 551.2 | 1541.9 | 10,668 | 368.2 | 60.6 |
| B. On-Site Facilities: | | | | | |
| DDB.01 | 0.06 | 0.09 | | | |
| DDB.02 | 0.20 | 2.30 | 14.00 | 6.00 | |
| DDB.03 | 3.07 | 17.28 | 132.94 | 61.45 | |
| AVERAGE | 1.09 | 6.56 | 73.47 | 33.73 | |

Table 14. Daily Pollutant Discharges for Complex and On-Site Facilities, lbs/day. (Continued)

| Plant | Tot. Org. N | Kjel-N | $NH_3$-N | $NO_3$-N | $NO_2$-N | Sulfate |
|---|---|---|---|---|---|---|
| A. Complex Facilities: | | | | | | |
| DDA.01 | | 893.0 | 883.5 | 1526.7 | 3.84 | 46.60 |
| DDA.02 | 38.3 | | | | 0.81 | 131.0 |
| DDA.03 | 2320.2 | | 1960.9 | 3591.8 | 31.53 | 776.3 |
| DDA.04 | | 301.1 | 288 | 1008 | | 7422.2 |
| DDA.05 | | | | | | |
| DDA.06 | | 575.5 | 528 | 668 | 22.5 | 82.3 |
| DDA.07 | | 7.6 | 96.4 | 115.1 | 0.38 | 394.6 |
| AVERAGE | 1204.3 | 444.3 | 751.4 | 1381.9 | 11.8 | 1475.5 |
| B. On-Site Facilities: | | | | | | |
| DDB.01 | | | 0.24 | 1.76 | | |
| DDB.02 | | 10.00 | | 0.10 | | |
| DDB.03 | | 0.95 | 0.77 | 0.39 | | |
| AVERAGE | | 5.47 | 0.51 | 0.73 | | |

Table 15. Production-Based Pollutant Discharge for Complex and On-Site Facilities, lbs/ton.

| Plant | BOD | COD | Total Solids | Susp. Solids | Oil & Grease |
|---|---|---|---|---|---|
| A. Complex Facilities: | | | | | |
| PBA.01 | 12.7 | 20.6 | 14.8 | 1.8 | |
| PBA.02 | | | | | |
| PBA.03 | 0.44 | 6.46 | 99.65 | 1.1 | 0.00 |
| PBA.04 | 3.32 | 13.97 | 101.92 | 5.09 | 1.09 |
| PBA.05 | 112.5 | 212.3 | 294.1 | 54.1 | 6.1 |
| PBA.06 | 0.72 | 2.38 | 47.0 | 1.05 | 0.09 |
| PBA.07 | 0.17 | 0.60 | 43.9 | 1.56 | |
| AVERAGE | 21.64 | 42.72 | 100.2 | 10.78 | 1.82 |
| B. On-Site Facilities: | | | | | |
| PBB.01 | 0.000 | 0.003 | | | |
| PBB.02 | 0.003 | 0.036 | 0.219 | 0.094 | |
| PBB.03 | 0.512 | 2.880 | 22.156 | 10.242 | |
| AVERAGE | 0.172 | 0.973 | 11.187 | 5.167 | |

Table 15. Production-Based Pollutant Discharge for Complex and On-Site Facilities, lbs/ton. (Continued)

| | Tot. Org. N | Kjel-N | $NH_3$-N | $NO_3$-N | $NO_2$-N | Sulfate |
|---|---|---|---|---|---|---|
| A. Complex Facilities: | | | | | | |
| PBA.01 | | 10.5 | 10.4 | 18.0 | 0.05 | 0.55 |
| PBA.02 | 0.53 | | | | 0.01 | 1.82 |
| PBA.03 | 6.24 | | 5.27 | 9.66 | 0.08 | 2.09 |
| PBA.04 | | 2.15 | 2.06 | 7.20 | | 53.02 |
| PBA.05 | | | | | | |
| PBA.06 | | 5.76 | 5.28 | 6.68 | 0.23 | 0.82 |
| PBA.07 | | 0.12 | 1.54 | 1.84 | 0.01 | 6.30 |
| AVERAGE | 3.32 | 4.63 | 4.91 | 8.68 | 0.08 | 10.77 |
| B. On-Site Facilities: | | | | | | |
| PBB.01 | | | 0.007 | 0.050 | | |
| PBB.02 | | 0.156 | | 0.002 | | |
| PBB.03 | | 0.157 | 0.129 | 0.067 | | |
| AVERAGE | | 0.157 | 0.068 | 0.040 | | |

per day basis, is much smaller for on-site then complex facilities, reflecting the smaller size of these plants, the approximately one hundred fold less flow volume (Table 11), and the lower pollutant concentrations shown in Table 13. Similar results are observed in Table 15, where pollutant discharges have been normalized on a lbs. per ton final explosive product basis.

The average data for the complex and on-site plants indicates a BOD discharge of 21.6 vs 0.17 lbs/ton of product, a suspended solids discharge of 10.8 vs 5.2 lbs/ton and nitrate nitrogen discharge of 8.7 vs 0.04 lbs/ton product. Thus, the categorization of the explosives industry into complex and on-site plant is justified by both a wastewater volume and mass pollutant discharge (per ton product) basis.

Only limited data were available on the wastewater characteristics associated with the manufacture of intermediate and specialty products of the explosive industry. These data are presented in Tables 16-18. As in the case of plant-wide wastes, there is a great deal of variability in waste nature from plant to plant. Products for which detailed data were available included nitrogen facilities manufacturing ammonia, nitric acid and ammonium nitrate, nitroglycerine and PETN production, and blasting caps. Tables 16-18 also contain data from three plants using water scrubbers for dust control in dynamite formulation facilities.

Nitrogen plant wastes are characterized by low pH and BOD, moderate suspended solids and oil and grease, and moderate to high nitrogen levels (Table 16). Total nitrogen discharge exceeds 3.8 lbs. per ton of nitrogen facility product, as shown in Table 18. BOD and oil and grease are each less then 0.1 lbs. per ton.

The pH of wastewater from NG manufacture range from low for the first (sour water) wash after nitration, to alkaline for the subsequent washes with sodium carbonate to neutralize residual acidity. In addition, these wastes are typically saturated with nitroglycerin, at up to 2500 mg/l NG. The neutralizing wash yields high sodium levels (above 10,000 mg/l), which is reflected in the high total solids. Concentrations of suspended solids are also typically high, although the source and nature of the suspended solids is unknown. Residual nitro- and dinitroglycerin

Table 16. Wastewater Concentrations for Specialty and Intermediate Products, mg/l.

| Plant | pH | BOD | COD | Total Solids | Susp. Solids |
|---|---|---|---|---|---|
| A. Nitrogen Plants: | | | | | |
| A.01 | | | 556 | 2752 | 543 |
| A.02 | 3.1 | | 16 | 354 | 4 |
| A.03 | | 9.0 | 135 | 1793 | 37 |
| A.04 | 2.3 | 18.0 | 127 | 1318 | 39 |
| AVERAGE | 2.3-3.1 | 13.5 | 208 | 1554 | 156 |
| B. Nitroglycerin: | | | | | |
| B.01 | 2.7-10.0 | | 709 | 2110 | 1894 |
| B.02 | | | | | |
| B.03 | 8-9 | 352 | 3518 | 81,527 | 46 |
| B.04 | 9.8 | 167 | 2553 | 63,859 | 65 |
| B.05 | | | | | |
| AVERAGE | 2.7-10.0 | 260 | 2260 | 49,165 | 668 |
| C. PETN: | | | | | |
| C.01 | 1.9 | 2640 | 5700 | 501 | 1 |
| C.02 | 5.5-7.0 | 40 | 80 | 455 | 5 |
| D. Dynamite Mix House Dust Control: | | | | | |
| D.01 | 7.4 | 136 | 425 | 1080 | 128 |
| D.02 | 7-8 | 6.4 | 74 | 319 | 14 |
| D.03 | | | | | |
| AVERAGE | 7-8 | 71.2 | 250 | 699 | 71 |
| E. Blasting Caps: | | | | | |
| E.01 | 5.5 | 84 | 166 | 363 | 15 |
| E.02 | 7.6 | 1.2 | 41.6 | 434 | 21.5 |

Table 16. Wastewater Concentrations for Specialty and Intermediate Products, mg/l. (Continued)

| Plant | Oil & Grease | Total Org. N | Kjel-N | $NH_3$-N | $NO_3$-N |
|---|---|---|---|---|---|
| A. Nitrogen Plants: | | | | | |
| A.01 | 42.9 | 364 | | 180 | 564 |
| A.02 | | | 17.9 | 16 | 95 |
| A.03 | 0.01 | 600 | | 532 | 73 |
| A.04 | 14.5 | | 37.2 | 36.2 | 77.7 |
| AVERAGE | 19.1 | 482 | 27.6 | 191.1 | 202 |
| B. Nitroglycerin: | | | | | |
| B.01 | | | 2.88 | 2.45 | 344 |
| B.02 | | 483.7 | | | |
| B.03 | | 0.0 | | 0.0 | 12,500 |
| B.04 | 313 | | 43.2 | 33.7 | 3849 |
| B.05 | | | | | |
| AVERAGE | 313 | 242 | 23.0 | 12.1 | 5564 |
| C. PETN: | | | | | |
| C.01 | | | 3.2 | 0.6 | 172.0 |
| C.02 | | | 4.0 | 2.0 | 49.0 |
| D. Dynamite Mix House Dust Control: | | | | | |
| D.01 | | | 1516 | 1503 | 2500 |
| D.02 | | 0.0 | | 0.0 | 7 |
| D.03 | | 3.8 | | | |
| AVERAGE | | 1.9 | 1516 | 752 | 1254 |
| E. Blasting Caps: | | | | | |
| E.01 | 5.5 | 1.20 | 0.54 | | 30.4 |
| E.02 | | | 0.32 | 0.32 | 13.4 |

Table 16. Wastewater Concentrations for Specialty and Intermediate Products, mg/1. (Continued)

| Plant | $NO_2^-$ N | Sulfate | NG | Sodium |
|---|---|---|---|---|
| A. Nitrogen Plants: | | | | |
| A.01 | | 305 | | |
| A.02 | 1.1 | 11 | | |
| A.03 | 6.3 | 85 | | |
| A.04 | | 850 | | |
| AVERAGE | 3.7 | 312 | | |
| B. Nitroglycerin: | | | | |
| B.01 | 1.36 | | | |
| B.02 | 0.38 | 2259 | | |
| B.03 | | 208 | 900-2500 | 14,879 |
| B.04 | | 6996 | | 11,767 |
| B.05 | | | 315-12,700 | |
| AVERAGE | 0.87 | 3154 | 315-12,700 | 13,323 |
| C. PETN: | | | | |
| C.01 | | | | |
| C.02 | | | | |
| D. Dynamite Mix House Dust Control: | | | | |
| D.01 | | | | |
| D.02 | | | | |
| D.03 | | | | |
| AVERAGE | | | | |
| E. Blasting Caps: | | | | |
| E.01 | | | | |
| E.02 | | | | |

Table 17. Daily Pollutant Discharges for Specialty and Intermediate Products, lbs/day.

| Plant | BOD | COD | Total Solids | Susp. Solids | Oil & Grease |
|---|---|---|---|---|---|
| A. Nitrogen Plants: | | | | | |
| AA.01 | | 334 | 1675 | 326 | 26 |
| AA.02 | | 3.3 | 33.8 | 0.8 | |
| AA.03 | 22.5 | 337.5 | 4482 | 92.5 | 0.02 |
| AA.04 | 140.5 | 991.4 | 10,288 | 304.4 | 113.2 |
| AVERAGE | 81.5 | 416 | 4112 | 181 | 46.4 |
| B. Nitroglycerin: | | | | | |
| BB.01 | | 28.4 | 84.5 | 25.8 | |
| BB.02 | | | | | |
| BB.03 | 58.7 | 586.8 | 13,599 | 7.7 | |
| BB.04 | 5.85 | 89.4 | 2237 | 2.28 | 10.96 |
| AVERAGE | 32.3 | 234 | 5307 | 11.9 | 10.96 |
| C. PETN: | | | | | |
| CC.01 | 220.2 | 475.4 | 41.8 | 0.1 | |
| CC.02 | 240 | 322 | 1860 | 20.0 | |
| D. Dynamite Mix House Dust Control: | | | | | |
| DD.01 | 79.4 | 248.1 | 630.5 | 74.7 | |
| DD.02 | 50.7 | 586 | 2526 | 111 | |
| DD.03 | | | | | |
| E. Blasting Caps: | | | | | |
| EE.01 | 288.6 | 570.4 | 1227 | 55.5 | 18.9 |
| EE.02 | 0.88 | 30.5 | 318 | 15.8 | |

Table 17. Daily Pollutant Discharges for Specialty and Intermediate Products, lbs/day. (Continued)

| Plant | Tot. Org. N | Kjel-N | $NH_3$-N | $NO_3$-N |
|---|---|---|---|---|
| A. Nitrogen Plants: | | | | |
| AA.01 | 219 | | 108 | 338 |
| AA.02 | | 3.7 | 3.3 | 19.8 |
| AA.03 | 1500 | | 1330 | 182.5 |
| AA.04 | | 290.4 | 282.6 | 606.5 |
| AVERAGE | 859 | 147.1 | 431 | 202 |
| B. Nitroglycerin: | | | | |
| BB.01 | | 0.1 | 0.1 | 13.8 |
| BB.02 | 8.87 | | | |
| BB.03 | 0.0 | | 0.0 | 2085 |
| BB.04 | | 1.51 | 1.18 | 134.8 |
| AVERAGE | 4.44 | 0.76 | 0.43 | 744 |
| C. PETN: | | | | |
| CC.01 | | 0.3 | 0.1 | 14.3 |
| CC.02 | | 16.0 | 8.0 | 197.0 |
| D. Dynamite Mix House Dust Control: | | | | |
| DD.01 | | 885.0 | 877.5 | 1459.5 |
| DD.02 | 0.0 | | 0.0 | 55.4 |
| DD.03 | 0.06 | | | |
| E. Blasting Caps: | | | | |
| EE.01 | 4.12 | | 104.6 | |
| EE.02 | 0.23 | 0.23 | 9.83 | |

Table 17. Daily Pollutant Discharges for Specialty and Intermediate Products, lbs/day. (Continued)

| Plant | $NO_2$ N | Sulfate | NG | Sodium |
|---|---|---|---|---|
| A. Nitrogen Plants: | | | | |
| AA.01 | | 183 | | |
| AA.02 | 0.23 | 2.3 | | |
| AA.03 | 15.8 | 212.5 | | |
| AA.04 | | 6635 | | |
| AVERAGE | 8.0 | 1758 | | |
| B. Nitroglycerin: | | | | |
| BB.01 | 0.05 | | | |
| BB.02 | 0.01 | 41.4 | | |
| BB.03 | | 34.7 | 145-417 | 2482 |
| BB.04 | | 245.1 | | 412.2 |
| AVERAGE | 0.03 | 107.1 | 145-417 | 1447 |
| C. PETN: | | | | |
| CC.01 | 0.01 | | | |
| CC.02 | 0.04 | | | |
| D. Dynamite Mix House Dust Control: | | | | |
| DD.01 | | | | |
| DD.02 | 5.5 | | | |
| DD.03 | 0.0 | | | |
| E. Blasting Caps: | | | | |
| EE.01 | | | | |
| EE.02 | | | | |

Table 18. Production-Based Pollutant Discharge for Specialty and Intermediate Products, lbs/ton.

| Plant | BOD | COD | Total Solids | Susp. Solids | Oil & Grease |
|---|---|---|---|---|---|
| A. Nitrogen Plants: | | | | | |
| AAA.01 | | 1.67 | 8.38 | 1.63 | 0.13 |
| AAA.02 | | 0.05 | 0.52 | 0.01 | |
| AAA.03 | 0.07 | 1.05 | 14.00 | 0.29 | 0.00 |
| AVERAGE | 0.07 | 0.92 | 7.63 | 0.64 | 0.06 |
| B. Nitroglycerin: | | | | | |
| BBB.01 | | 2.58 | 7.68 | 2.35 | |
| BBB.02 | | | | | |
| BBB.03 | 3.13 | 31.3 | 725.3 | 0.4 | |
| BBB.04 | 0.32 | 4.97 | 124.3 | 0.12 | 0.61 |
| AVERAGE | 1.73 | 13.0 | 285.8 | 0.96 | 0.61 |
| C. PETN: | | | | | |
| CCC.01 | 62.9 | 135.8 | 11.9 | 0.03 | |
| D. Dynamite Mix House Dust Control: | | | | | |
| DDD.01 | 0.93 | 2.92 | 7.42 | 0.88 | |
| DDD.02 | 1.16 | 13.34 | 57.53 | 2.53 | |
| DDD.03 | | | | | |

Table 18. Production-Based Pollutant Discharge for Specialty and Intermediate Products, lbs/ton. (Continued)

| Plant | Tot. Org. N | Kjel-N | $NH_3$-N | $NO_3$-N |
|---|---|---|---|---|
| A. Nitrogen Plants: | | | | |
| AAA.01 | 1.10 | | 0.54 | 1.69 |
| AAA.02 | | 0.06 | 0.05 | 0.30 |
| AAA.03 | 4.69 | | 4.16 | 0.57 |
| AVERAGE | 2.90 | 0.06 | 1.58 | 0.85 |
| B. Nitroglycerin: | | | | |
| BBB.01 | | 0.01 | 0.01 | 1.25 |
| BBB.02 | 0.99 | | | |
| BBB.03 | | | | 111.2 |
| BBB.04 | | 0.08 | 0.07 | 7.49 |
| AVERAGE | 0.99 | 0.05 | 0.04 | 40.0 |
| C. PETN: | | | | |
| CCC.01 | | 0.09 | 0.03 | 4.1 |
| D. Dynamite Mix House Dust Control: | | | | |
| DDD.01 | | 10.41 | 10.32 | 17.17 |
| DDD.02 | 0.0 | | 0.0 | 1.26 |
| DDD.03 | 0.0 | | | |

Table 18. Production-Based Pollutant Discharge for Specialty and Intermediate Products, lbs/ton. (Continued)

| Plant | $NO_2^-$ N | Sulfate | NG | Sodium |
|---|---|---|---|---|
| A. Nitrogen Plants: | | | | |
| AAA.01 | | 0.92 | | |
| AAA.02 | 0.00 | 0.04 | | |
| AAA.03 | 0.05 | 0.66 | | |
| AVERAGE | 0.03 | 0.54 | | |
| B. Nitroglycerin: | | | | |
| BBB.01 | 0.00 | | | |
| BBB.02 | 0.00 | 4.6 | | |
| BBB.03 | | 1.85 | 7.8-22.2 | 132.4 |
| BBB.04 | | 13.6 | | 22.9 |
| AVERAGE | 0.00 | 6.68 | 7.8-22.2 | 77.7 |
| C. PETN: | | | | |
| CCC.01 | 0.00 | | | |
| D. Dynamite Mix House Dust Control: | | | | |
| DDD.01 | | | | |
| DDD.02 | 0.13 | | | |
| DDD.03 | 0.0 | | | |

glycol, which show up as "oil and grease," result in high readings for this latter parameter, and also yield high BOD values. The nitrating acid, being a mixture of nitric and sulfuric acids, results in high nitrate and sulfate levels in the wash waters. Nitrate nitrogen discharge (Table 18) averages 40.0 lbs/ton NG produced.

Rudolfs (8) has also reported mass pollutant discharge for nitroglycerin manufacture. His data, expressed as lbs/ton NG are given below:

| | |
|---|---|
| $BOD_5$ | 3.94 lbs/ton |
| Suspended Solids | 6.36 |
| Nitrate-N | 114.80 |
| Nitrite-N | 4.22 |
| Sulfate | 37.80 |

The above data are much higher then the values found in this study.

Limited data on PETN manufacture indicate acidic to neutral wastewaters, which may be high in BOD if acetone recovery is incorporated in the PETN process. Nitrate levels are high, reflecting the use of nitric acid in the nitration reaction. The primary water use in blasting cap manufacture is wash and clean-up water, and Table 16 indicates that the resultant wastewater contains low to moderate levels of contaminents.

In summary, waste characteristics of the industry as a whole include pH varying from extremely low to high values, BOD and suspended solids of moderate to high concentrations, and typically high nitrogen and sulfate levels. Wastewaters associated with particular intermediate specialty products typically show even more extreme ranges for the above pollutants. There are significant data gaps, as evidenced by the results reported in Tables 13-18, and it is likely that insufficient data is available for on-site plants and specialty production activities to provide valid averages.

# VIII. TREATMENT TECHNOLOGY

The major water pollutants resulting from explosives manufacture are summarized in Table 19. Most are common to all categories of production facilities. Within the industry, these wastewaters result from product process effluents, equipment clean-up and cooling water. Sanitary wastes are in most cases handled on a separate basis, typically with septic systems. Exclusive of this waste, the most critical pollutants of the explosives industry are extreme pH, $BOD_5$, suspended solids, oil and grease, nitrogen forms, residual explosives (NG), and high dissolved solids. Particularly contributing to the dissolved solids is sulfate and for some processes, sodium.

Settling tanks and sumps are used in all plants visited, to remove suspended solids. Due to inadequate maintenance and hydraulic overload, these catch basins are often not effective, resulting in high effluent suspended solids. In some instances, screening precedes the catch basin, but does not appear to significantly improve solids removal. Average effluent suspended solids discharge for complex facility was 93.4 mg/l and for on-site plants 182.8 mg/l. Several aspects of complex facility operation contribute to this difference in effluent suspended solids levels. Among these are dilution of the wastes with cooling water, greater care to avoid undue loss of intermediate and product explosives, and wider use of dry clean-up procedures in the complex facilities. A comparison of suspended solids discharge for complex facilities routinely practicing dry clean-up prior to final equipment washdown indicates an average suspended solids discharge of 30.7 mg/l, as compared with the industry average of 93.4 mg/l. This represents a reduction in suspended solids discharge of greater then 60 percent, plus reduction in clean-up water volume. In many instances, it appears that dry clean-up techniques alone will satisfy suspended solids discharge requirements, with the additional benefits of reduction in water use and recovery of product. Since much of the suspended solids is nitrogenous and organic in nature, associated benefits of dry clean-up would be reduction of discharge levels of these pollutants as well. For example, average $BOD_5$ concentration for

Table 19. Major Pollutants of the Commercial Explosives Industry.

| Parameter | Complex Facilities | On-Site Facilities | Nitrogen Plants | NG | PETN | Dust Control | Blast. Caps |
|---|---|---|---|---|---|---|---|
| pH | X | X | X | X | X | | |
| BOD | X | X | X | X | X | X | |
| COD | X | X | X | X | X | X | X |
| Tot. Solids | X | X | X | X | | X | X |
| Susp. Solids | X | X | X | X | X | X | X |
| Oil/Grease | X | ND | X | X | ND | ND | ND |
| Tot. Org. N | X | ND | X | X | ND | | ND |
| Kjel.-N | X | X | X | X | | X | |
| $NH_3$-N | X | X | X | X | | X | |
| $NO_3$-N | X | X | X | X | X | X | X |
| Sulfate | X | ND | | X | | | |

ND = No Data Available.

complex facilities employing dry clean-up is 18.4 mg/l versus the industry average of 362.2 mg/l. Among the complex facilities, 37.5 percent of those plants for which discharge data was available employ dry clean-up. Excluding these facilities, the average suspended solids and $BOD_5$ discharge levels for the remaining plants was 124.7 and 533.8 mg/l, respectively. Thus, it appears that good housekeeping practices can have a major effect in reducing pollutant discharge. Dry clean-up is commonly by sweeping and wiping of equipment, although one plant utilizes a vacuum system.

Use of oil skimmers is also prevalent within the industry. The waste oil collected in these units is often sprayed on dirt roads within the boundaries of the plant, for dust control. Oily wastes are associated with many aspects of explosives manufacture, including ANFO formulation, oil leakage from pumps and motors, and chemicals such as NG which show up as oil. Average oil discharge from complex facilities utilizing oil skimmers is less then 2 mg/l, as compared to the industry average of 10.2 mg/l. Oil skimmers are effective only in separation of non-emulsified oil (9). It is probable that this is the major fraction of oil in the wastewaters of the explosives industry, due to the sources of oily wastes. The effectiveness of a gravity-type oil separation depends upon proper hydraulic design, and design period of wastewater retention. Retention times of less then one hour may yield oil removal efficiencies of only 60 percent or less (10). Well designed oil separations should yield effluent oil levels of less then 10 mg/l (9). The oil levels reported for the explosives industry are near this limit, and it is unlikely that use of skimmers alone will achieve any significant reduction in present discharge of oily wastes.

Neutralization is employed to a limited extent within the industry, due to the pH extremes encountered with various process waste streams. This is a problem more of the complex facilities than on-site plants, which typically discharge near-neutral pH wastewaters. Acidic wastewaters originate from acid production and recovery, and from nitration processes such as for NG or PETN. In the plants visited neutralization treatment, if practiced, was limited to the first (acidic) wash water

from NG manufacture. Neutralization was by percolation of the wastewater through crushed limestone beds. Available data indicates that the process was inefficient, with at least two plants reporting effluent pH of 2.7 and 3.6, after neutralization. It is probable that the high sulfate content of the NG wash water results in precipitate formation, thereby coating the crushed limestone and preventing its reaction. Other wastewaters of extreme pH, including acidic wastes from acid manufacture, acid recovery and nitration processes, and alkaline wastes from acetone still bottom and sodium carbonate wash solution for NG, are also unneutralized by the industry. Typically the alkaline NG wash, having pH 9-10, is mixed with other plant wastes and released without treatment. There appears to be little reason why the industry could not reuse this wash water, adding additional sodium carbonate as necessary to provide sufficient neutralizing capability. Each batch discharge of alkaline wash water contributes high dissolved solids, particularly nitrate and sulfate, to the waste flow and, being saturated with NG, increases the effluent nitroglycerin and the BOD and oil and grease characteristics associated with the presence of NG. Where recycle does not prove feasible, the alkaline wash water could be used to neutralize effluent from the limestone beds. This would also reduce dissolved solids, through precipitation of calcium sulfate. The extreme pH nature of wastewaters of the industry, even where limestone neutralization is practiced, indicates need for additional pH adjustment into the near-neutral range.

The technology and economics of pH control are well established, and there are many acceptable methods for treating both acidic and basic wastes. Accepted methods cited by Patterson and Minear (9) include: 1) mixing acid and alkaline wastes so that the net effect is a near-neutral pH; 2) passing acidic wastewaters through beds of limestone; 3) mixing acid wastes with lime or dolomitic lime slurries; and 4) adding the proper amounts of concentrated caustic (NaOH) or soda ash ($Na_2CO_3$) to acid wastewaters. Rudolfs (8) has emphasized the need for neutralization of acid explosives wastes and reports that dolomitic lime is effective and economical. Koziorowski and Kucharski (4) confirm

the need for explosives waste neutralization, and report most effective and economic treatment results from separation of effluents with a high acid content from less acidic wastes. Dolomite quicklime and slaked lime are recommended as most suitable material for pH control. Equalization tanks are suggested to provide most effective dosage for control (4). This may become particularly appropriate where waste flows are intermittent, as with the batch washing of nitroglycerin. Dickerson (11), reporting experience in treating acidic wastes of an explosives plant, found that ground limestone was most effective in neutralizing wastes containing below 4000 mg/l acid, while dolomitic lime was preferred for more concentrated waste streams.

In addition to the acidic waste streams, the possibility of accidental spills of concentrated acids exists at the complex facilities. Each of the plants visited incorporates an emergency catch basin to which acid spills can be diverted.

The wash waters from nitroglycerin manufacture, in addition to extreme pH, BOD and suspended and dissolved solids, contain high nitrate, sulfate and dinitroglycerin levels plus from several hundred to several thousand mg/l of dissolved nitroglycerin. The NG has a solubility of 1,380 mg/l at 20$^{o}$C, and will precipitate out as an oily substance at temperatures below that of the process wastewater. This represents an explosives hazard, due to the sensitive nature of the NG. All NG wastewaters flow through one or more catch boxes, in series, to retrieve precipitated NG. However, the effluent from these catch boxes still contain high concentrations (100-1000 mg/l) of dissolved dinitroglycerin and NG, which exert high BOD and could precipitate further in receiving waters. Therefore, further treatment for removal of dissolved NG should be considered.

Koziorowski and Kucharski (4) have reported on studies to determine if nitroglycerin effluents could be treated by biological methods. After preliminary settling the wastes, containing 900 to 2100 mg/l of NG, were treated by activated sludge. The decomposition product was nitrite. The authors report successful treatment with 16 hours aeration time, although the maximum concentration of NG which could be treated successfully was 400-500 mg/l.

Attempts to destroy nitroglycerin by quickline were also successful (4), resulting in its decomposition and the formation of calcium sulfate, calcium sulfite and calcium salts of low molecular weight organic acids. After the wash water had been settled, lime was added at up to 2 g/l. The decomposition process required 3 days reaction time. The sludge formed in the process was stable with no explosive properties, although the effluent was highly alkaline.

The U.S. Army, in assessing treatment technology applicable to wastewaters of military explosives manufacture, has considered biological as well as several chemical treatment schemes to remove NG and dinitroglycerin. Biological treatment of wastewaters containing approximately 1500 mg/l NG and 850 mg/l of dinitroglycerin (DNG) has been only partially effective (12). In assessing physical and chemical methods to treat NG wastewater, Smith (13) reports effective removal of sodium alkalinity from the neutralizing wash by lime plus calcium sulfate addition. Carbonate and bicarbonate alkalinity are precipitated as calcium carbonate. This process will, however, increase the sulfate content of the wastewater. Estimated cost for the process was $2.56 per 1000 gallons. Activated carbon adsorption was found ineffective for removal of NG. Smith (13) has also reported successful complete treatment of NG and DNG by both permanganate and ozone oxidation, at long detention periods. Ozone requirement was estimated at 24 lb/lb NG and DNG, resulting in high (approximately $40.00 per 1000 gal.) treatment costs.

Biological treatment by both activated sludge and lagoons appears to have potential for treatment of explosives wastes. One plant, producing smokeless powder plus NG and other intermediates, uses extended aeration activated sludge, followed by lagooning, to treat the combined plant flow. The activated sludge unit operates with 24 hours aeration at 8000-9000 mg/l mixed liquor suspended solids. There is little excess sludge wasting required for the plant. The lagoon has 5-10 days detention time, and is aerobic to facultative anaerobic, depending upon temperature and waste loading to the lagoon. Table 20 presents operating data on the treatment system. A comparison of the influent data of

Table 20. Treatment Plant Operation and Average Waste Concentrations, mg/l

| Parameter | Influent | Activated Sludge Effluent | Lagoon Effluent | Percent Removal |
|---|---|---|---|---|
| pH - Range | 6.5-8.8 | 7.4-8.4 | 7.5-10.5 | |
| Total Solids | 1646 | — | 1137 | 30.9 |
| Suspended Solids | 292 | — | 47 | 83.9 |
| $BOD_5$ | 628.0 | 29.2 | 16.8 | 97.3 |
| COD | 1175 | 177 | 114 | 90.3 |
| $BOD_5$/COD | 0.53 | 0.16 | 0.15 | |
| Phosphorus | 0.28 | — | 0.15 | 46.4 |
| Chlorides | 97.0 | — | 107.1 | |
| Oil and Grease | 35.0 | — | 8.0 | 77.1 |
| Ammonia -N | — | | 0.25 | |
| Kjeldahl -N | — | | 0.17 | |
| Nitrate -N | — | | 0.04 | |
| Nitrite -N | — | | 0.1 | |
| Sulfate | 351.4 | | 76.6 | 78.2 |

Table 20 with the average data for complex facilities (Table 13), indicates that this plant's flow is similar in nature to the industry average. Although only limited data are given for the activated sludge effluent, this process results in $BOD_5$ removal exceeding 95 percent. Table 20 also summarizes the treatment efficiencies for the activated sludge plus lagoon treatment sequence. Although influent nitrogen levels are not known, they are likely near these shown in Table 13. Effluent nitrogen levels are below 0.3 mg/1. The effluent from the lagoon is spray irrigated on a four acre field, at 3 inches hydraulic loading per month.

Dickerson (11) has also reported the use of biological treatment for a smokeless powder explosives waste. Based upon pilot studies, a two-stage trickling filter was employed to treat process effluents ranging up to 4500 mg/1 in $BOD_5$. Operation at hydraulic loadings of 20 MGAD on both units, with a recycle ratio of 20:1, yielded BOD removal of 97.5 percent and effluent BOD of 90 mg/1. Lower hydraulic loading rates (8-16 MGAD) slightly improved treatment efficiency, yielding a final effluent BOD of 55 mg/1. However, severe problems were experienced with clogging of the filters at the lower hydraulic loading rates.

Biological treatment for nitrogen forms appears to be an effective and acceptable type of technology. The explosives industry wastewaters are typically high in both ammonia and nitrate nitrogen. Industry averages for complex and on-site plants are 163.5 and 81.7 mg/1 $NH_3$-N, and 264.7 and 381.5 mg/1 $NO_3$-N, respectively. Activated sludge nitrification of both dilute and concentrated ammonia wastewaters is well established (14,15). Although most research on nitrification has been directed toward wastewaters containing less then 60 mg/1 $NH_3$-N, limited work on more concentrated wastewaters has shown effective biological treatment. The feasibility of ion exchange or other physical-chemical methods of control have also been proven (16, 17), although the high nitrate levels of most explosives industry wastewaters indicate that a combination of biological nitrification-denitrification is likely to be the treatment method of choice. Hutton and La Rocca (15) reported on

the use of biological oxidation as a means to treat high ammonia wastewaters from the manufacture of ammonium nitrate and urea fertilizers. The waste studied was similar to the explosives industry average, being high in $NH_3$-N (445 mg/l), total solids (1845 mg/l) and nitrate plus nitrite (75 mg/l). Total organic carbon varied from 1 to 170 mg/l, averaging 55 mg/l. Operating with a low MLVSS system of 130 mg/l, due to the low organic carbon concentration of the wastewater, $NH_3$-N oxidation of 90 percent resulted with solids retention time of 30 days and process loading of 0.5 lbs $NH_3$-N/day/lb MLVSS. Operating temperatures of 60-70$^{o}$F and pH of 8.0-8.4 was required. Factors improving nitrification included longer solids retention times, higher temperature and lower nitrogen loading.

Currently, the commercial explosives industry has no nitrate abatement technology in use, although the U.S. Army has investigated several methodologies for nitrate treatment for their military explosives plants. After initial feasibility studies, the U.S. Army has selected biodenitrification, ion exchange and reverse osmosis as the processes having greatest potential for nitrate removal from explosives wastewaters (18). Table 21 summarizes the results of the preliminary feasibility studies carried out by the Army, and indicates that on the basis of treatment efficiency plus cost, biodenitrification is likely to be the method of choice. On the basis of product recovery however, both ion exchange and reverse osmosis have advantages.

At the present time, application of reverse osmosis is largely limited to desalination and production of drinking water, and recovery of products in the food processing and electroplating industries (19). Investigations of reverse osmosis as a method of concentrating nitrate wastes are few, and those reported in the literature indicate variable results (20-22). Advantages of reverse osmosis include its low energy requirement and its corrosion free operation in contrast to evaporative systems. However, reverse osmosis membranes are affected by pressure, chemical change and hydrolysis, bacteria, temperature and surface coating (23).

The Army has investigated on a pilot scale reverse osmosis treatment

Table 21. Nitrate Treatment Methods (18).

| Method | Removal Efficiency, % | Approx. Cost, $/MG |
|---|---|---|
| Biodenitrification | 70-95 | 3.45-30 |
| Algae Harvesting | 50-90 | 20-35 |
| Ion Exchange | 80-99 | 170-300 |
| Electrodialysis | 30-50 | 100-250 |
| Chemical Reduction | 33-90 | — |
| Reverse Osmosis | 50-96 | 100-600 |
| Distillation | 90-98 | 400-1000 |
| Land Application | 5-15 | |

of nitrate wastewaters. At pH 1.5, no nitrate removal occurred although 99 percent sulfate removal was achieved. Nitrate removal efficiency increased with increasing pH, to 90 percent at pH 7.0. Sulfate removal was not found to be pH dependent, with reverse osmosis achieving 99 percent sulfate separation at all pH values tested. However, it appears that the lower limit of osmosis treatment is near 20 mg/l $NO_3$-N, and that achieving lower concentrations would not be economically feasible. Reverse osmosis application thus appears to be best suited for nitrate recovery, with subsequent treatment of the dilute permeate by other means such as biodenitrification or ion exchange. The Army is continuing to investigate reverse osmosis, utilizing low-pH resistant sulfonated polyphenylene oxide (SPPO) membranes, with evaporative concentration of the process brine to recover mixed nitric and sulfuric acid for reuse. This process if feasible, will both eliminate the need for neutralization and provide product recovery.

The study of ion exchange treatment for nitrate removal has been largely limited to the abatement of low nitrate concentrations (24-26). One historical problem with the use of ion exchange for nitrate treatment has been the lack of resin specificity for nitrate. However, nitrate selective resins have recently become available (27, 28). The only reported ion exchange system in full-scale use for the treatment of high nitrate concentrations is the Chemical Separations Corporation Continuous Counter-Current (Chem-Seps) Ion Exchange System (18). This system has been installed at the Farmers' Chemical Association, Inc. plant (Tyner, Tennessee), a manufacturer of ammonium nitrate. The system is reported to reduce nitrate levels of 1240 mg/l at 0.9 MGD, to effluent concentrations of 7-11 mg/l, in the presence of other ions. The regenerants used are nitric acid and ammonium hydroxide, with ammonium nitrate (concentration about 19%) being recovered in the resin regeneration step.

The application of this process for complex facilities appears particularly feasible, since most of the larger explosives plants use ammonium nitrate as an intermediate in explosives manufacture. The Chem-Seps process, in addition to nitrate removal, is reported to reduce

$NH_3$-N levels from 340 to 2-3 mg/l. The sulfate level of the waste being treated was only 72 mg/l (20), and it is possible that the higher sulfate levels associated with explosives wastewaters may interfere with effective nitrogen removal. However, preliminary studies by the Army indicate reduction of nitrate from 1650 to 20 mg/l, even in the presence of high sulfate concentration (29). The process, using DOWEX Resin MWA-1, also reduced sulfate from 4320 to 200 mg/l. The process, for a 3 MGD flow, is estimated to require a capital investment of $1,650,000.

Of all nitrate treatment processes, biological denitrification has been most intensively studied. Most of these investigations have been directed toward removing nitrate from municipal wastewaters (14). The U.S. Army has carried out pilot scale suspended growth biodenitrification studies at two of its contractor operated munitions plants (18). Initial studies indicated that detention times exceeding ten days were required for 90 percent or greater nitrate reduction, at suspended solids levels of 100-200 mg/l. A modified 5000 gpd pilot unit, operating at 1000-3000 mg/l suspended solids, is reported to achieve 93 percent denitrification with an 18 hour detention time. Average influent $NO_3$-N of 558 mg/l is reduced to 47 mg/l effluent concentration. At influent $NO_3$-N concentrations below 400 mg/l and suspended solids below 1400 mg/l, the process has yielded effluent nitrate levels of 1 mg/l, however (29). The primary disadvantages of the biodenitrification process are the needs for close pH and temperature control, and the large quantities of methanol required. At a nitrate level of 500 mg/l, about 5 tons of methanol is required per million gallons of waste treated (30).

The high sulfate levels associated with explosives wastewaters may require treatment. Although the commercial explosives industry has not to date specifically considered sulfate as a pollutant requiring abatement, the U.S. Army has begun to investigate technologies appropriate for sulfate control. At present, their studies are only in the initial assessment stages, and no proven process exists within the explosives industries. Methods reported under consideration include (31):

1. Reverse Osmosis - Separation of sulfate from the wastewater by use of suitable membranes, to produce water for plant reuse and concentrated brine for reclamation processes.

2. Ion Exchange - Removal of sulfate by use of sulfate specific resins, producing reclaimed water and a useful by-product resulting from the regeneration of the ion exchange bed.

3. Evaporation - Combined use of reverse osmosis and evaporation techniques to recover sulfuric acid.

4. Calcination - Produce calcium sludge by precipitation with lime, followed by high temperature calcination to evolve sulfur dioxide for sulfuric acid production, plus lime recovery.

Reverse osmosis has been investigated at pilot scale, in combination with nitrate removal. High sulfate removal efficiencies (99+%) are reported even at acidic pH. However, membrane hydrolysis at low pH greatly decreases useful membrane life. In the absence of more resistant membranes, neutralization would likely be required for the reverse osmosis feed stream. This may result in precipitation, and fouling of the membranes by solids.

The most technically feasible method of sulfate treatment appears to be calcination. However, the solubility of calcium sulfate is high (app. 470 mg/l of sulfate), and lime treatment may not be feasible for more stringent effluent requirements. The use of barium to precipitate sulfate has been suggested (30), but cost and the possibility of exceeding effluent barium levels appear to be major disadvantages.

The economic and technical difficulties associated with treatment for pollutants such as nitrate and sulfate has led to several applications of waste disposal by land irrigation in the explosives industry. During

the course of this study, two complex facilities and one on-site plant were visited which employed spray irrigation for wastewater disposal. Only one of these plants was located in an arid region, the second being in the upper midwest and the third in the southeast. For two plants, the only waste treatment preceeding spray irrigation was gravity settling of solids. The on-site facility, a water gel formulator, has an extremely low waste flow of 25-30 gpd. This flow is collected in a tank truck and, as necessary, sprayed onto an abandoned mine overburden disposal site on the plant property..

The complex facility located in an arid region produces ANFO, dynamites and various intermediate and specialty products. Following sedimentation and oil skimming, the wastewater is spray irrigated onto a 12 acre pasture of bermuda grass, at 11.7 gpm/acre. The pasture is used to graze cattle. However, the land is currently overloaded hydraulically, and plans to expand the irrigation area by 20-40 additional acres are underway. This will reduce hydraulic loading to 2.7-4.4 gpm/acre.

The third instance of disposal by irrigation involves a complex facility which pretreats its waste by activated sludge and lagooning. Hydraulic loading is at a rate of 0.47 gpm/acre. However, it is reported that only half of the flow percolates into the soil, the remainder being surface runoff.

Lever (32) has reported the large-scale use of effluent from a dynamite plant in South Africa for irrigation of 2,000 acres. The feasibility of the project was enhanced by the fertilizer value of the wastewater, and the cultivation of hay on the land. The waste, at pH 7 and containing 1,270 mg/l $NH_3$-N, 540 mg/l $NO_3$-N, and 2,200 mg/l sulfate, was similar to complex facility wastes found in this study. Application is at a rate of 0.21 gpm/acre. This rate was determined on the basis of a total nitrogen application rate of 500 lb/acre/year. The hay produced is harvested and sold.

The use of land application appears practical where suitable soil and climatic conditions exist. The soil has the inherent ability to be able to remove materials from the wastewater by both microbial and crop

utilization, and by physical adsorption. However, only the biological processes affect the nitrates since the soils, which are generally negatively charged, allow the nitrate to pass unimpeded, depending upon the hydraulic loading rate (18). Limitations include the large land area required, and the possibility of contamination of ground water.

A second alternative to the use of land application for on-site wastewater disposal is the use of evaporative ponds. Use of evaporative ponds was encountered at three plants during the course of this study. One, a complex facility located in an arid region, utilizes evaporation for only a small portion of its waste; that resulting from clean-up of ANFO blending equipment plus NG neutralizer wastewaters. There is no overflow from the pond; water loss being through a combination of evaporation and percolation. The remaining two plants utilizing evaporation are on-site facilities; one located in the northern mid-west and the second in the central southeast. At the former facility, all wastewater except sanitary is discharged to a natural basin on the plant property, at a rate of 4650 gpd in winter and 6150 gpd in summer. Water loss from the pond is primarily through percolation with some evaporative loss in summer.

The third plant utilizes an evaporative pond for process wastewater from water gel explosives manufacture. All other process wastes, including non-contact cooling water, are discharged directly. The lagoon, with a capacity of 7 million gallons, receives wastewater flow at a rate of 1 gpm. The pond capacity thus represents a 13-year detention time, assuming no water loss by percolation or evaporation. The effective use of evaporative ponds depends upon soil conditions as they influence percolation, and upon climatic conditions as they effect evaporation. The availability of land for lagooning should represent no problem in the explosives industry, due to the typically remote locations and large land areas required to separate the explosives facilities from neighboring activities.

## IX. ACKNOWLEDGEMENTS

The cooperation of E. Martin and D. Becker of the Effluent Guidelines Division, and personnel of the Regional Offices of the Environmental Protection Agency and the Internal Revenue Service greatly assisted the performance of this study.

## X. REFERENCES


1. Shreve, R. Norris, Chemical Process Industries, 3rd Edition, McGraw-Hill Book Co., N.Y.

2. "Active List of Permissible Explosives and Blasting Devices," U. S. Bur. Mines, Explosives Div., Report 3910.

3. "Mineral Industry Surveys," U.S. Bur. of Mines, Div. of Nonmetallic Minerals, July 31, 1973.

4. Kozlorowski, B., and J. Kucharski, Industrial Waste Disposal, Pergammon Press, N. Y., 1972.

5. "Mineral Industry Surveys," U.S. Bur. of Mines, Div. of Health and Safety, Nov., 1972.

6. "Mineral Industry Surveys," U.S. Bur. of Mines, Div. of Accident Prevention and Health, March, 1969.

7. Zimmerman, R., "Industrial Wastewater Coefficients (SIC) and Water Management," presented at 28th Purdue Industrial Waste Conference, West Lafayette, Ind., May 1-3, 1973.

8. Rudolfs, W., Industrial Wastes Their Disposal and Treatment, Reinhold Pub. Corp., New York, 1953.

9. Patterson, J. W. and R. A. Minear, Wastewater Treatment Technology, 2nd Edition, Publication IIEQ 73-1, Illinois Institute for Environmental Quality, 1973.

10. Wallace, A. T., G. A. Rohlich and J. R. Willemonte, "The Effect of Inlet Conditions on Oil-Water Separators at SOHIO's Toledo Refinery," Proc. 20th Purdue Industrial Waste Conference, 1965.

11. Dickerson, B. W. "Treatment of Powder Plant Wastes," Proc. 6th Purdue Industrial Waste Conference, 1951.

12. Wendt, T. M. "Biodegradation of Wastes from Nitroglycerine Production," Technical Memorandum 2071, Picatinny Arsenal, Dover, N. J., 1973.

13. Smith, L. L., "Propellant Plant Pollution Abatement," Project Status Report, Picatinny Arsenal, Dover, N. J., 1973.

14. "Nitrification and Denitrification Facilities," EPA Technology Transfer Seminar Publication, August, 1973.

15. Hutton, W. C. and S. A. LaRocca, "Design for Biological Treatment of Concentrated Ammonia Wastewaters," presented at 46th Ann. Conf., Water Poll. Control Fed., Cleveland, Ohio, Oct., 1973.

16. Adams, C. E., D. A. Krenkel and E. C. Bingham, "Investigations into the Reduction of High Nitrogen Concentrations," Proc. 5th. International Water Poll. Research Conf., 1970.

17. Bingham, E. C., "Fertilizer Maker Stops Nitrogen," Water and Waste Engineering, F-4, Nov., 1972.

18. Harris, L. R., "Abatement of High Nitrate Concentrations at Munitions Plants: A State of the Art Review," Tech. Report 4568, Picatinny Arsenal, Dover, N. J., 1973.

19. Kaup, E. C., "Design Factors in Reverse Osmosis, "Chemical Engineering, 80 (8): 47, 1973.

20. Bingham, E. C. and R. C. Chopra, "Unique Closed Cycle Water System for an Ammonium Nitrate Producer Using Chem-Seps Continuous Countercurrent Ion Exchange," presented at the International Water Conference, The Engineers' Society of Western Pennsylvania, 32nd Annual Meeting, Pittsburgh, Penn., 1971.

21. Eliassen, R. and G. Tchobanoglous, "Removal of Nitrogen and Phosphorus from Wastewaters," Envir. Sci. Tech., 3 (6): 538, 1969.

22. "Cleaning our Environment, the Chemical Basis for Action," American Chemical Society , Washington, D. C., 1969.

23. Spatz, D. D., "Industrial Waste Processing with Reverse Osmosis," Osmonics Inc., Minneapolis, Minn., 1971.

24. Roblich, G. A., "Methods for the Removal of Phosphorus and Nitrogen from Sewage Plant Effluent," Internat. Jour. Air and Water Poll., 7:427, 1963.

25. Eliassen, R., B. M. Wyckoff and C. D. Tonkin, "Progress Report-Reclamation of Re-Usable Water from Sewage," Technical Report 49, Department of Civil Engineering, Stanford University, 1965.

26. Eliassen, R., "Ion Exchange for Reclamation of Reusable Water Supplies," presented at the 1965 Conference, AWWA, Portland, Oregon, 1965.

27. Grinstead, R. R. and K. C. Jones, "Nitrate Removal from Wastewater by Ion Exchange," U.S. EPA Project No. 17010 FSJ, 1971.

28. Rohm and Haas Company, "Amberlite LA-1," Technical Note No. IE-41058, 1969.

29. Eskelund, G., "Elimination of Nitrate Wastes," Technical Memorandum 2130, Picatinny Arsenal, Dover, N. J., 1974.

30. Neal, L. G., "Army Munitions Plants Modernization Program, Pollution Abatement Review, Final Report," Report No. 96020.007, Picatinny Arsenal, Dover, N. J., 1973.

31. Pregun, E., "Elimination of Sulfate Wastes," Technical Memorandum 2130, Picatinny Arsenal, Dover, N. J., 1974

32. Lever, N. A., "Disposal of Nitrogenous Liquid Effluent from Modderfontein Dynamite Factory," Proc. 21st Purdue Indust. Waste Conf., 1966.

# XI. APPENDIX

## Metric Conversion Factors

| English Unit | | Metric Equivalent |
|---|---|---|
| lb. | = | 0.454 kg |
| ton | = | 0.908 kkg |
| gal. | = | 3.785 liters |
| | = | $3.785 \times 10^{-3}$ meters$^3$ |
| MG | = | $3.785 \times 10^{6}$ liters |
| | = | $3.785 \times 10^{3}$ meters$^3$ |
| lbs/ton | = | 0.500 kg/kkg |
| lbs/MG | = | 0.120 mg/l |
| | = | $0.120 \times 10^{-3}$ kg/m$^3$ |

**SELECTED WATER RESOURCES ABSTRACTS**

**INPUT TRANSACTION FORM**

1. Report No. [redacted] 2. [redacted] 3. Accession No. W

4. Title
State-of-the-Art For The Inorganic Chemicals Industry: Commercial Explosives

[redacted] Report Date
6.

8. Performing Organization
IIT [redacted] 01/74 thru -003 74


7. Author(s) James W. Patterson, Ph.D.
Roger A. Minear, Ph.D.

9. Organization Department of Environmental Engineering
Illinois Institute of Technology
Chicago, Ill. 60616


10. Project No.
1BB036 R/T 21 AZQ 29

Contract/Grant No.
R-800857

13. Type of Report and Period Covered

12. Sponsoring Organization [redacted]

15. Supplementary Notes

Environmental Protection Agency report number, EPA-600/2-74-009b, March 1975

16. Abstract


A literature and field study of the commercial explosives industry reveals that on the basis of products manufactured, plant size, and the nature of the wastewater, the industry may be divided into three segments. One, complex facilities, are large plants manufacturing a variety of explosives and intermediate products. The second category is small specialized formulation plants, typically limited to blending explosives formulations for use in nearby mining activities. The final category is specialty product facilities, devoted to manufacture of select ingredients such as lead azide and other explosives initiators, blasting caps, electric matches and similar appurtenance items.

The explosives industry discharges large volumes of wastewater, typically high in BOD, nitrogen, and solids, frequently at extreme pH, and containing trace to high quantities of dissolved and particulate explosives products. Although pollution abatement technology has not been widely implemented within the explosives industry, there is potential for significant abatement of pollutant discharge by good housekeeping practice, application of proven treatment technology and under certain conditions total wastewater containment.


17a. Descriptors

17b. Identifiers

17c. COWRR Field & Group

18. Availability

19. Security Class. (Report)

20. Security Class. (Page)

21. No. of Pages

22. Price

Send To:
WATER RESOURCES SCIENTIFIC INFORMATION CENTER
U.S. DEPARTMENT OF THE INTERIOR
WASHINGTON, D. C. 20240

Abstractor

Institution

WRSIC 102 (REV. JUNE 1971)