EPA-600/2-76-032c
March 1976

Environmental Protection Technology Series

SOURCE ASSESSMENT:
FERTILIZER MIXING PLANTS

Industrial Environmental Research Laboratory
Office of Research and Development
U.S. Environmental Protection Agency
Research Triangle Park, North Carolina 27711

RESEARCH REPORTING SERIES

Research reports of the Office of Research and Development, U.S. Environmental Protection Agency, have been grouped into five series These five broad categories were established to facilitate further development and application of environmental technology. Elimination of traditional grouping was consciously planned to foster technology transfer and a maximum interface in related fields. The five series are:

1. Environmental Health Effects Research
2. Environmental Protection Technology
3. Ecological Research
4. Environmental Monitoring
5. Socioeconomic Environmental Studies

This report has been assigned to the ENVIRONMENTAL PROTECTION TECHNOLOGY series. This series describes research performed to develop and demonstrate instrumentation, equipment, and methodology to repair or prevent environmental degradation from point and non-point sources of pollution. This work provides the new or improved technology required for the control and treatment of pollution sources to meet environmental quality standards

EPA REVIEW NOTICE

This report has been reviewed by the U.S. Environmental Protection Agency, and approved for publication. Approval does not signify that the contents necessarily reflect the views and policy of the Agency, nor does mention of trade names or commercial products constitute endorsement or recommendation for use.

This document is available to the public through the National Technical Information Service, Springfield, Virginia 22161.

EPA-600/2-76-032c
March 1976

SOURCE ASSESSMENT:

FERTILIZER MIXING PLANTS

by

Gary D. Rawlings and Richard B. Reznik

Monsanto Research Corporation
Dayton Laboratory
Dayton, Ohio 45407

Contract No. 68-02-1874
ROAP No. 21AXM-071
Program Element No. 1AB015

EPA Project Officer: D.A. Denny

Industrial Environmental Research Laboratory
Office of Energy, Minerals, and Industry
Research Triangle Park, NC 27711

Prepared for

U.S. ENVIRONMENTAL PROTECTION AGENCY
Office of Research and Development
Washington, DC 20460

PREFACE

The Industrial Environmental Research Laboratory (IERL) of EPA has the responsibility for insuring that air pollution control technology is available for stationary sources. If control technology is unavailable, inadequate, uneconomical or socially unacceptable, then development of the needed control technology is conducted by IERL. Approaches considered include: process modifications, feedstock modifications, add on control devices, and complete process substitution. The scale of control technology programs range from bench to full scale demonstration plants.

The Chemical Processes Section of IERL has the responsibility for developing control technology for a large number (>500) of operations in the chemical and related industries. As in any technical program the first step is to identify the unsolved problems.

Each of the industries is to be examined in detail to determine if there is sufficient potential environmental risk to justify the development of control technology by IERL. This report contains the data necessary to make that decision for fertilizer mixing plants.

Monsanto Research Corporation has contracted with EPA to investigate the environmental impact of various industries which represent sources of emissions in accordance with EPA's responsibility as outlined above. Dr. Robert C. Binning serves as Program Manager in this overall program entitled, "Source Assessment," which includes the investigation of sources in each of four categories: combustion, organic materials, inorganic materials and open sources. In this study of fertilizer mixing plants, Mr. Edward J. Wooldridge served as EPA Project Leader.

CONTENTS

Section		Page
I	Introduction	1
II	Summary	3
III	Source Description	13
	A. General Description	13
	B. Raw Materials	23
	1. Primary Nutrients	23
	2. Secondary and Micronutrient Materials	25
	3. Pesticides	26
	C. Ammoniation-Granulation Plants	33
	1. Process Description	33
	2. Pugmill Ammoniator	38
	3. Rotary-Drum Ammoniator-Granulator	38
	4. Raw Materials	42
	5. Emission Sources	44
	D. Bulk Blending Plants	46
	1. Process Description	46
	2. Types of Mixers	49
	3. Raw Materials	51
	4. Emission Sources	51
	E. Liquid Mix Plants	56
	1. Process Description	56
	2. Hot Mix Plants	59
	3. Cold Mix Plants	69
	4. Raw Materials	69
	5. Emission Sources	72
IV	Emissions	75
	A. Ammoniation-Granulation Plants	76
	1. Selected Emissions	76
	2. Emission Characteristics	82
	B. Bulk Blending Plants	88
	1. Selected Emissions	88
	2. Emission Characteristics	92

		Page
IV	Emissions (continued)	
	C. Liquid Mix Plants	94
	1. Selected Emissions	94
	2. Emission Characteristics	97
	D. Environmental Effects	99
V	Control Technology	109
	A. Ammoniation-Granulation Plants	109
	1. Process Modifications	109
	2. Pollution Control Devices	112
	B. Bulk Blending Plants	125
	1. Process Modifications	125
	2. Pollution Control Devices	130
	C. Liquid Mix Plants	138
	1. Process Modifications	138
	2. Pollution Control Devices	138
VI	Growth and Nature of the Industry	141
VII	Appendixes	149
	A. Granular Raw Materials Consumed at Fertilizer Mixing Plants in the U.S.	150
	B. Raw Data used to Calculate Emission Factors for Ammoniation-Granulation Plants	151
	C. TLV's for the Raw Materials, Secondary, and Micronutrients used by Fertilizer Mixing Plants	156
	D. Details of Sampling Presurvey at Bulk Blending Plants	157
	E. TLV and LD_{50} Values for Selected Herbicides (Active Ingredients) used at Fertilizer Mixing Plants	164
	F. Data used to Establish Emission Factors for Hot Mix Liquid Mix Fertilizer Plants	165
	G. Mass of Particulate Emissions from Fertilizer Mixing Plants	166
	H. Captial and Operating Costs for High Efficiency Wet Scrubbers	169
VIII	Glossary of Terms	177
IX	Conversion Factors and Metric Prefixes	179
X	References	181

LIST OF FIGURES

Figure		Page
1	Types of Fertilizers Consumed in the U.S.	14
2	Distribution of Commercial Fertilizers Consumed in the United States in 1973	15
3	Proportion of Mixed Fertilizer Grades Consumed in 1973	16
4	Three Types of Fertilizer Mixing Plants	17
5	Basic Process Flow Diagrams for Fertilizer Mixing Plants	19
6	Fertilizer Production by the Three Types of Mixing Plants	20
7	Geographical Distribution of Herbicides Applied to Crops in 1971	32
8	Geographical Distribution of Ammoniation-Granulation Mixing Plants in 1973	34
9	Generalized Flow Diagram of an Ammoniation-Granulation Fertilizer Plant	36
10	TVA Continuous Ammoniator-Granulator	40
11	Conventional Ammoniation-Granulation Plant with a Rotary-Drum Ammoniator	41
12	Geographical Distribution of Fertilizer Bulk Blending Plants in 1973	47
13	Bulk Blending Plant with a Ground Level Rotary Mixer	48
14	Spray System for Coating Granules in Rotary Mixer	52
15	Bulk Loading Station with Elevated Storage Used in Bulk Blending	55
16	Geographical Distribution of Liquid Mix Fertilizer Plants in 1972	57
17	Generalized Flow Diagram of the Production of Liquid Mixed Fertilizers	58
18	Types of Liquid Mixed Fertilizer Plants	58
19	Reactor Assembly for the Production of Liquid Fertilizer	61
20	TVA Liquid Fertilizer Suspension Mix Plant	63
21	Hot Mix Plant for the Continuous Production of Clear Liquid Fertilizers	64

LIST OF FIGURES (continued)

Figure		Page
22	Hot Mix Plant for the Batch Production of Clear Liquid Fertilizers	65
23	Plant Using Pipe Reactor Process, with Wet Scrubber Separate Mix Tank and Pipe-Type Coolers	67
24	Plant Using Pipe Reactor Process with Tower Design	68
25	Diagram of a Liquid Cold Mix Plant	70
26	General Distribution of Mean Source Severity as a Function of Distance From the Source, Showing the Two General Roots to the Plume Dispersion Equation	107
27	Particulate Collection Efficiencies for Various Types of Control Equipment	110
28	Cyclone Gas Velocity Control	113
29	Utilization of Dryer and Cooler Exhaust Blower to Remove In-Plant Dust	114
30	Dust Collector Seal	115
31	Dust-Tight Cyclone Closure, Molded Rubber Seal	116
32	Impingement Type Scrubber	118
33	Cyclonic Scrubber	119
34	Two-Stage Cyclonic Scrubber	121
35	Venturi Cyclonic Scrubber	122
36	Packed Bed Scrubber	123
37	Dust Depressant Application System	129
38	Bulk Blend Plant Equipped with Dust Controls	131
39	Alternative Dust Control Systems	132
40	Bin-Filling Arrangement	134
41	Bucket Elevators Used in Bulk Blending Plants	136
42	Vane Type Seal for Bucket Elevator	137
43	Suggested Fume Scrubbing System for Fluid Plant	139
44	Fertilizer Consumption from 1960 to 1980	142

LIST OF FIGURES (continued)

Figure		Page
45	Portion of the Mixed Fertilizer Market Shared by the Three Types of Mixing Plants	143
46	Nitrogen Supply Forecast for the U.S.	145
47	Phosphate Supply Forecast for the U.S.	145
48	Potash Supply Forecast for the U.S.	145

LIST OF TABLES

Table		Page
1	Average Operating Conditions for Representative Fertilizer Mixing Plants	5
2	Emission Factors and Total Masses of Controlled Emissions from Fertilizer Mixing Plants	7
3	Summary of $\overline{\chi}_{max}$ Values and Source Severity for Emissions from Representative Mixing Plants	8
4	Affected Population Around Representative Fertilizer Mixing Plants	9
5	Production Statistics for Fertilizer Mixing Plants in 1973	22
6	Raw Materials Consumed by Fertilizer Mixing Plants in 1972	24
7	Quantities of Secondary and Micronutrient Fertilizer Materials Consumed in the U.S. in 1972	26
8	Principal Inorganic Forms of Micronutrients	27
9	Principal Organic Forms of Micronutrients	28
10	Estimated Quantities of Selected Herbicides (Active Ingredients) Applied to Crops with Mixed Fertilizers	30
11	Types of Raw Materials Consumed by Ammoniation-Granulation Plants	42
12	Formulation Data for an Ammoniation-Granulation Plant	43
13	Survey of Bulk Blending Mixer Types	50
14	Estimated Quantities of Selected Herbicides (Active Ingredients) Used by Bulk Blend Plants	53
15	Raw Materials Consumed by Liquid Mix Fertilizer Plants	71
16	Estimated Quantities of Selected Herbicides (Active Ingredients) Used by Liquid Mix Plants	73
17	Uncontrolled Emission Factors for Ammoniation-Granulation Fertilizer Plants	79
18	Stack Data for Ammoniation-Granulation Plants	82

LIST OF TABLES (continued)

Table		Page
19	Human Hazard Potential Due to Exposure to Air Emissions from Ammoniation-Granulation Plants	83
20	Particle Size Distribution of the Emissions from the Dryer, Cooler, and Bagging Operations	85
21	Uncontrolled Particulate Emission Factors for Bulk Blending Fertilizer Plants	89
22	Estimated Maximum Uncontrolled Emission Factors for Secondary and Micronutrient Materials Used at Bulk Blending Plants	91
23	Estimated Maximum Emission Factors for Selected Herbicides (Active Ingredients) Used at Bulk Blending Plants	93
24	Uncontrolled Emission Factors for Liquid Mix Fertilizer Plants	96
25	Estimated Maximum Emission Factors for Selected Herbicides (Active Ingredients) Used at Liquid Mix Plants	98
26	Maximum Ground Level Concentrations $\bar{\chi}_{max}$ of Controlled Emission Species from Fertilizer Mixing Plants	101
27	Values of Mean Source Severity Controlled Emissions	102
28	Annual Masses of Emissions from Fertilizer Mixing Plants in the U.S.	103
29	Comparison of Fertilizer Mixing Plant Generated Particulate Emissions to Total National Particulate Emission Values	104
30	Distribution of Fertilizer Mixing Plants in Selected States	106
31	Affected Population Around Representative Fertilizer Mixing Plants	108
32	Stack Measurements at an Ammoniation-Granulation Plant in Maryland	111
33	Operating Conditions for a Venturi Cyclonic Wet Scrubber	124
34	Characteristics of Various Bag Filters	126
35	Effect of 10-34-0 in Depressing Dust in Bulk Blend Plant	128

LIST OF TABLES (continued)

Table		Page
36	Ventilation Rates for Bulk Blending Equipment	135
B-1	Plant Source Test Data	152
B-2	Statistical Analysis of Emissions from Ammoniation-Granulation Plants for 95% Confidence Limits	155
D-1	Results of Sieve Test for Bulk Blending Plant Raw Materials	160
D-2	Worst-Case Emission Factors for the Raw Materials Used by Fertilizer Bulk Blending Plants	161
D-3	Emission Factors for Uncontrolled Particulate Emissions from Fertilizer Bulk Blending Plants	163
H-1	Estimated Capital Cost Data (Cost in Dollars) for Two-Stage Cyclonic Scrubber	170
H-2	Annual Operating Cost Data for Two-Stage Cyclonic Scrubbers	171
H-3	Estimated Capital Cost Data (Costs in Dollars) for Venturi Cyclonic Scrubbers	172
H-4	Annual Operating Cost Data for Venturi Cyclonic Scrubbers	173
H-5	Estimated Capital Cost Data (Costs in Dollars) for Packed Crossflow Scrubbers for DAP Process Plants	174
H-6	Annual Operating Cost Data for Packed Crossflow Scrubbers	175

LIST OF SYMBOLS

Symbol	Definition
AAQS	Ambient air quality standard
A,B,C,a,b,c	Symbols used to designate parameters and their corresponding variance
ACMM	Actual cubic meter per minute
ACGIH	American Conference of Governmental Industrial Hygienists
DAP	Diammonium phosphate
DSCMM	Dry standard cubic meter per minute
e	Natural logarithm base = 2.72
F	Hazard factor equal to the primary ambient air quality standard for criteria pollutants or to a reduced TLV (i.e., TLV·8/24·1/100) for noncriteria pollutants
h	Stack height
LD_{50}	Chemical dose lethal to 50% of a population of test animals
M_b	Total mass of specific emission species in state
M_p	Total mass of specific emission species from mixing plants
n	Number of samples or number of degrees of freedom
ppm	Parts per million
Q	Flow rate of an emission
S	Source severity
SCM	Standard cubic meter
SCMM	Standard cubic meter per minute
$s(X)$	Estimated standard deviation of sample
$s(\overline{X})$	Estimated standard deviation of the mean
t	Calculated value which represents the difference between the mean of a sample and the true mean of the population from which the sample was drawn, divided by the estimated standard deviation of the mean

LIST OF SYMBOLS (Continued)

Symbol	Definition
$t_{0.05}$	± Values of "Student t" distribution between which 95% of the area lies
t_0	Instantaneous averaging time of 3 minutes
t_1	Averaging time
TLV	Threshold limit value
$\bar{u}$	National average wind speed
UAP	Urea ammonium phosphate
$\bar{X}$	Mean value of a sample
x	Axial distance from an emission source
μ	True mean of the population
π	3.14
$\bar{\chi}$	Time average ground level concentration of an emission
χ_{max}	Instantaneous maximum ground level concentration
$\bar{\chi}_{max}$	Time-average maximum ground level concentration

SECTION I

INTRODUCTION

Fertilizers in the United States are consumed either as direct application (single nutrient) fertilizers or as mixed fertilizers. The latter are defined as fertilizers which contain more than one of the primary plant nutrients: nitrogen (N), phosphorus (P), and potassium (K). The four types of mixed fertilizers are N-P-K, N-P, N-K, and P-K mixtures.

The potential environmental impact of air emissions from plants producing mixed fertilizers is evaluated in this report. To achieve this result, the study identifies the sources of air emissions, the emission species characteristics, and the process variables that affect the quantity of emissions. The distribution of air pollution control equipment among the mixing plants is also described.

The fertilizer mixing industry can be divided into three distinct groups according to production techniques: ammoniation-granulation, bulk blend, and liquid mix. (The production of diammonium phosphate was excluded from this investigation.) Granular mixed fertilizers are produced by ammoniation-granulation and bulk blending plants, while liquid mixing plants produce liquid mixed fertilizers. The report discusses these processes in detail, identifies

specific emission sources, and evaluates the effects of process variables on emission rates. It also explains existing and future air pollution control equipment for this industry and discusses industry trends.

SECTION II

SUMMARY

The fertilizer industry in the United States produced 39.1×10^6 metric tons[a] (43.1 million tons) of commercial fertilizers in 1973. Of that total, 48% or 18.8×10^6 metric tons (20.7 million tons) were direct application, single nutrient fertilizers, while 52% or 20.3×10^6 metric tons (22.4 million tons) were mixed fertilizers containing more than one primary plant nutrient material.

The three primary nutrients required by all plants are nitrogen (N), phosphorus (P), and potassium (K). Mixed fertilizers containing varying proportions of these nutrients are expressed as N-P-K grades, where N represents the percentage of available nitrogen, P represents the percentage of available P_2O_5, and K represents the percentage of soluble K_2O. The majority (77.5%) of the mixed fertilizers consumed in the U.S. are mixtures containing all three primary plant nutrients.

In 1973, there were 8,603 fertilizer mixing plants in the U.S. located in 47 states and 3,002 (59%) counties. The majority (55.5%) of the mixing plants, producing 51.0% of mixed fertilizers, are located in the states of Illinois, Indiana, Iowa, Minnesota, Missouri, Ohio, and Texas. The

---

[a] 1 metric ton = 10^6 grams = 2,205 pounds = 1.1 short tons; (short tons are designated "tons" in this document;) other conversion factors and metric system prefixes are presented in Section IX.

majority (82.1%) of the plants are located in counties with less than 39 persons per square kilometer (100 persons/mi^2).

There are three types of fertilizer mixing plants:

- Ammoniation-granulation: 195 plants
- Bulk blending: 5,640 plants
- Liquid mixing: 2,768 plants

Ammoniation-granulation plants mix liquid ammonia and superphosphoric acid with granular urea-ammonium nitrate, potash and other materials in a granulator to produce a granular, dry mixed fertilizer. At bulk blend plants, granular raw materials such as diammonium phosphate, urea-ammonium nitrate, triple superphosphate and potash are physically mixed, without a chemical reaction, to produce a dry granular mixed fertilizer. Liquid mix plants mix liquid raw materials to produce a fluid mixed fertilizer. While few in number, ammoniation-granulation plants (excluding diammonium phosphate plants which are not covered in this report) produce 45% (9.14×10^6 metric tons) of all mixed fertilizer in the U.S. Bulk blend and liquid mix plants produce 32% (6.50×10^6 metric tons) and 23% (4.67×10^6 metric tons) of the total production, respectively.

The size and specific operating conditions for individual mixing plants vary widely depending on plant geographical location and length of the growing season.

Annual production rates can vary from 10^3 metric tons to 10^5 metric tons. Operating periods can vary from 8 hr/day, 5 days/week, 5 months/yr to 16 hr/day, 6 days/week, 10 months/yr. Operating conditions for average fertilizer mixing plants are given in Table 1. The operating conditions summarized in Table 1 define representative plants which serve as the basis for characterizing the air emissions as described later.

Table 1. AVERAGE OPERATING CONDITIONS FOR REPRESENTATIVE FERTILIZER MIXING PLANTS

Parameter	Plant type		
	Ammoniation-granulation	Bulk blend	Liquid mix
Production, 10^3 metric tons/yr (1,000 tons/yr)	46.9 (51.7)	1.5 (1.27)	1.69 (1.86)
Design capacity, metric ton/hr (tons/hr)	22.7 (25)	13.6 (15)	13.6 (15)
Operating period, hr/yr	3,216	1,280	1,280

Since detailed plant production rates are not available, the total annual production was divided by the number of plants (e.g., for ammoniation-granulation, [9.14 x 10^6 metric tons/yr] ÷ 195 plants = 46.9 x 10^3 metric tons/yr-plant) to calculate average plant production rates.

The emission species from fertilizer mixing plants are:

- Ammonia vapor and ammonium salts
- Chlorine vapor and chloride salts
- Fluorine compounds
- Phosphorus compounds
- Particulates

The emission points for each kind of mixing plant are divided into several types based on manufacturing process steps and are outlined below:

Ammoniation-Granulation Plants

- Material storage and handling
- Ammoniator-granulator
- Dryer and cooler
- Screen and oversize mill
- Bagging and loading

Bulk Blend Plants

- Material storage and handling
- Loading operations
- Fugitive building emissions

Liquid Mix Plants

- Hot mix reactor
- Raw material handling

The emission factors and total masses of emissions from each type of mixing plant are summarized in Table 2. Ammonia emissions from the ammoniator-granulator, dryer and cooler at ammoniation-granulation plants account for 96% of the ammonia emissions from mixing plants. The larger error values for particulate emissions are a result of a larger uncertainty in the emission factors for fugitive particulate emissions. Fugitive dust is the largest component in emissions from fertilizer mixing plants.

Total particulate emissions from fertilizer mixing plants were compared to emissions of particulates from all stationary sources on a national and statewide basis. It was found that mixing plants contribute 0.02% of total national particulate emissions and from 0.001% to 0.2% on a state level. The average state contribution was 0.03%.

In order to evaluate the potential environmental effect of fertilizer mixing plant emissions, the time-averaged maximum ground level concentration, $\overline{\chi}_{max}$, was calculated for each emission around the three representative plants (Table 3). The values of $\overline{\chi}_{max}$ were calculated from accepted plume dispersion equations using a 24-hr averaging time and the emission factors in Table 2.

Table 2. EMISSION FACTORS AND TOTAL MASSES OF CONTROLLED EMISSIONS FROM FERTILIZER MIXING PLANTS

Emission species	Ammoniation-granulation plants[a]		Bulk blend plants[b]		Liquid mix plants[a]	
	Emission factor, g/kg	Total mass, metric ton/yr	Emission factor, g/kg	Total mass, metric ton/yr	Emission factor, g/kg	Total mass, metric ton/yr
Ammonia	0.12 ± 66%	1,120 ± 740	0	0	0.011 ± 100%	50 ± 50
Total chlorine	0.0066 ± 175%	59 ± 103	0	0	0	0
Total fluorine	0.0014 ± 61%	13 ± 8	0	0	0.0002 ± 100%	1 ± 1
Total phosphorus	0.0049 ± 133%	45 ± 60	0	0	0.0001 ± 100%	0.4 ± 0.4
Particulate	0.21 ± 300%[c]	1,920 ± 5,760	0.3 ± 100%	1930 ± 1930	0.039 ± 100%	181 ± 181

[a]Based on an average control efficiency of 85% for all emission species.

[b]Based on uncontrolled emissions.

[c]Large error value because of large uncertainty of fugitive dust emissions.

Table 3. SUMMARY OF $\bar{\chi}_{max}$ VALUES AND SOURCE SEVERITY FOR EMISSIONS FROM REPRESENTATIVE MIXING PLANTS

Plant type[a]	Emission species	TLV, mg/m^3	Emission factor, g/kg	$\bar{\chi}_{max}$, $\mu g/m^3$	Source severity, S
Ammoniation-granulation[b]	Ammonia	18	0.12 ± 66%	16	0.26
	Chlorine	3	0.0066 ± 175%	0.84	0.08
	Fluorine	2.5	0.0014 ± 61%	0.18	0.02
	Phosphorus	100	0.0049 ± 133%	0.62	<0.01
	Particulate	10	0.21 ± 300%	27	0.10
Bulk blend[c]	Particulate	10	0.3 ± 100%	38	0.14
Liquid mix[b]	Ammonia	18	0.011 ± 100%	0.64	0.01
	Fluorine	2.5	0.002 ± 100%	0.12	0.01
	Phosphorus	100	0.0001 ± 100%	<0.01	<0.01
	Particulate	10	0.039 ± 100%	2.3	0.01

[a]A representative plant is defined in Table 1.

[b]Emission factors based on an average control efficiency of 85% for all emission species.

[c]Emission factor for uncontrolled emissions.

The source severity, S, was defined as the ratio of $\overline{\chi}_{max}$ to an F factor. For particulate emissions, F was defined as the primary ambient air quality standard (AAQS). For other emission species, F was defined as the TLV® modified for a 24-hour exposure and multiplied by a 1/100 safety factor. The values of S are shown in Table 3.

Another measure of potential environmental impact is the population which may be affected by emissions from representative fertilizer mixing plants. The affected population is defined as the number of persons living in the area around the plant where $\overline{\chi}$ (the time-averaged ground level concentration) divided by AAQS (or F) is greater than 0.1 or 1.0 Plume dispersion equations are used to find this area, which is then multiplied by the average population density (39 persons/km^2) to determine the affected population. The affected population values for those emission species which result in a value of S greater than 0.1 and 1.0 are shown in Table 4.

Table 4. AFFECTED POPULATION AROUND REPRESENTATIVE FERTILIZER MIXING PLANTS

Plant type	Emission species	Affected population, persons	
		S >0.1	S >1.0
Ammoniation-granulation	Ammonia	48	0
	Particulate	6	0
Bulk blend	Particulate	2	0

The types of air pollution control techniques used at fertilizer mixing plants are as varied as the operating conditions at each plant. All ammoniation-granulation plants, however, do use some form of control device, such as

cyclone, wet scrubber, baghouse, or a combination of devices. Wet scrubber designs vary from medium efficiency (85% efficient) cyclonic types to high efficiency (>99% efficient) packed bed and venturi scrubbers. These scrubbers use water or 30% phosphoric acid solution to recover ammonia and other gaseous emissions from the ammoniator-granulator. Dry cyclones and occasionally baghouses (in <10% of the plants) are used to collect particulate emissions from the dryer, cooler, screens, and oversize mill. An average ammoniation-granulation plant uses wet scrubbers to collect emissions from the ammoniator-granulator and cyclones to collect particulates emitted from the dryer and cooler. The exhaust from the cyclones is then vented into the wet scrubber. On the average, 85% of all emission species at these plants are collected by these two control devices.

Bulk blending plants do not use control devices because their particulate emission rates are below all local and state emission standards. Their emissions are fugitive in nature, in that they are not emitted from a stack but rather from doors and windows in the blending plant building.

Of the 2,768 liquid mix plants, only the 100 pipe reactor-type plants require emissions control. These plants either have wet scrubbers or are stacked tower design plants in which the cooling tower acts as a wet scrubber in addition to cooling the product.

The mixed fertilizer industry has grown at a rate of 3% to 5% per year for the past 3 years. This steady increase is expected to continue for another 2 years. A more rapid increase will not take place until the current shortage of available raw materials, such as nitrogen and potash, has ended. The shortage in materials is due primarily to an

increased demand without a corresponding increase in raw material production facilities. In addition, the current energy crisis has reduced the availability of the natural gas feedstock required to produce ammonia.

Based on the expected growth rate, the emissions from fertilizer mixing plants are expected to increase at approximately 3%/yr for the next 3 years. This increase in emissions will taper somewhat as the smaller ammoniation-granulation plants are phased out and replaced by larger plants that are equipped with more efficient emissions control equipment.

SECTION III

SOURCE DESCRIPTION

A. GENERAL DESCRIPTION

The U.S. Department of Agriculture reports than 39.1 x 10^6 metric tons of commercial fertilizers were consumed in the U.S. for the fertilizer year of July 1, 1972 to June 30, 1973.[1] This is a 4% increase over the 37.4 x 10^6 metric tons consumed during the 1972 fertilizer year. These figures represent all commercially produced fertilizers sold or shipped for farm and nonfarm use as fertilizer.

Of the 39.1 x 10^6 metric tons of fertilizers consumed, 18.8 x 10^6 metric tons, or 48% were direct application materials, and 20.3 x 10^6 metric tons, or 52% were mixed fertilizers (Figure 1 and Figure 2). Direct application materials include single nutrient fertilizers (nitrogen, N; phosphate, P_2O_5; and potash, K_2O; which totaled 17.4 x 10^6 metric tons), and secondary and micronutrient materials (1.4 x 10^6 metric tons). The single nutrient fertilizers include 12.1 x 10^6 metric tons of nitrogen materials, 2.1 x 10^6 metric tons of phosphate materials, 2.7 x 10^6 metric tons of potash materials, and 0.4 x 10^6 metric tons of natural organics. Secondary and micronutrient materials

---

[1]Commercial Fertilizers, Consumption in the United States, Year Ended June 30, 1973. Statistical Reporting Service, U.S. Department of Agriculture. Washington. Publication No. SpCr 7 (5-74). 1974. 26 p.

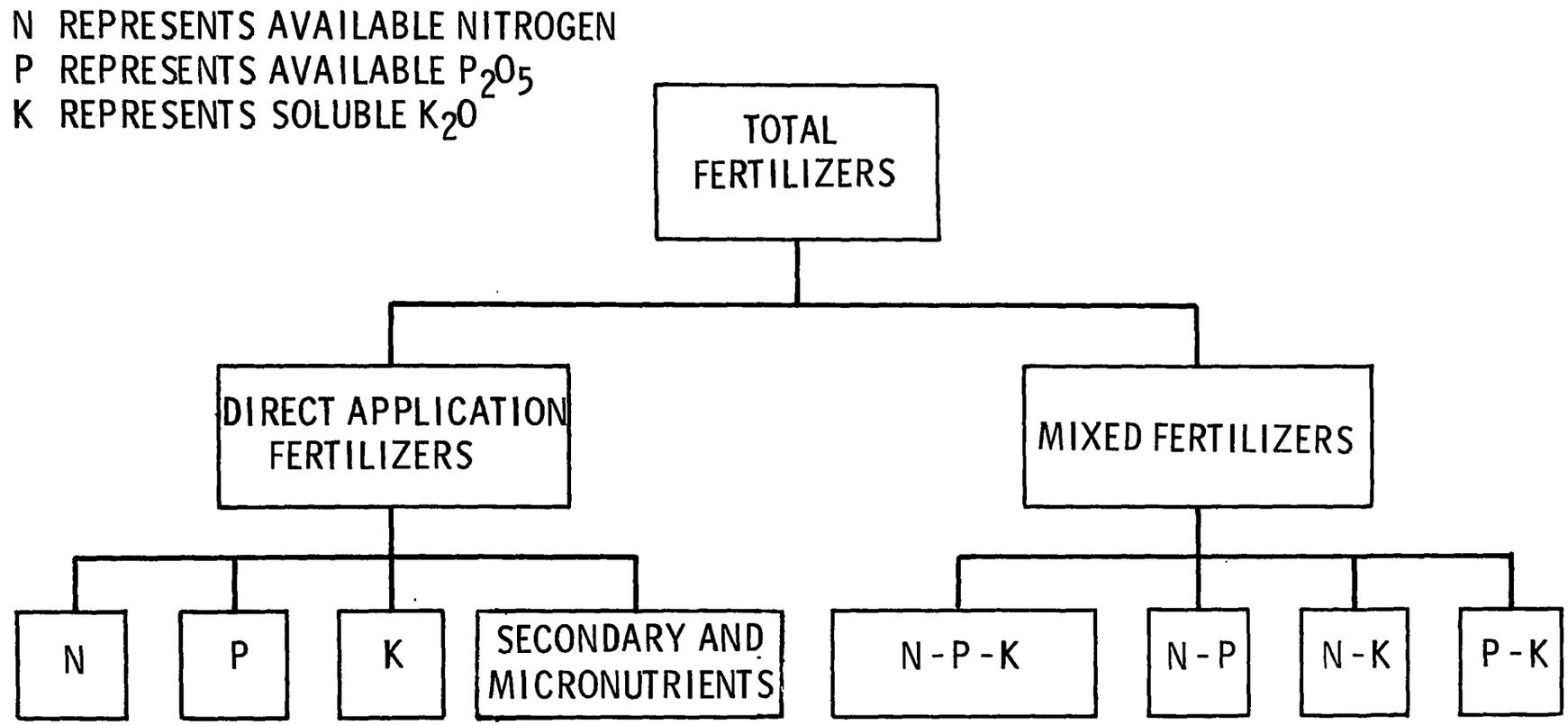

Figure 1. Types of fertilizers consumed in the U.S.

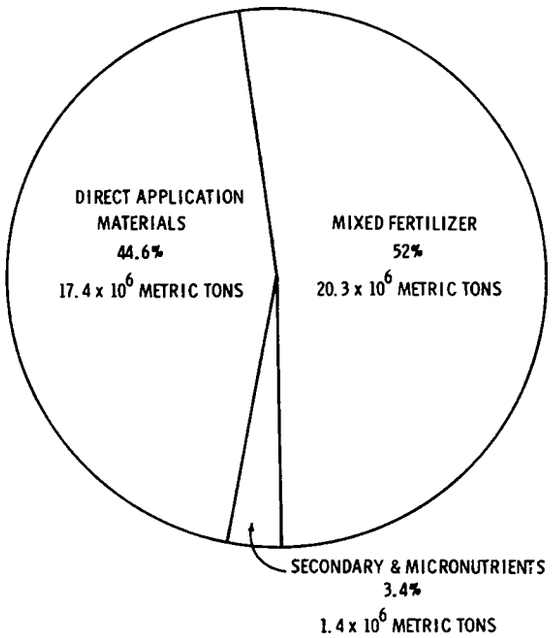

Figure 2. Distribution of commercial fertilizers consumed in the United States in 1973

are reported separately, but they are mixed with the primary nutrients and mixed fertilizers prior to field application.

A mixed fertilizer is defined as a fertilizer containing more than one of the primary plant nutrients: nitrogen, phosphate, and potash.[2] The fertilizer grade is specified according to its content of these nutrients and is usually designated as an N-P-K mixture. For example, according to the current reporting system the grade 11-37-10 indicates a formulation in which 11% of the mixture is nitrogen, 37% is available P_2O_5, and 10% is soluble K_2O. All phosphate containing materials are reported in terms of P_2O_5 and all potash materials are reported as K_2O. Other components in the mixture include chemically combined carriers, i.e., sulfates, phosphates and calcium, and additional fillers and conditioners. The average analysis of all mixed fertilizers

[2]Farm Chemicals Handbook - 1973, Dictionary of Plant Foods. Willoughby, Ohio, Meister Publishing Co., 1973. 64 p.

for the 1973 fertilizer year was 10.19% nitrogen, 18.66% P_2O_5, and 12.78% K_2O, totaling 41.63% plant nutrients.

The consumption values for the four types of mixed fertilizer (N-P-K, N-P, N-K, and P-K) are shown in Figure 3 in relation to their shares of the 20.3 x 10^6 metric tons of 1973 mixed fertilizer consumption. The majority (77.5%) is a mixture containing all three primary plant nutrients.

Mixed fertilizers are produced by three distinctly different types of production plants (Figure 4):

- Ammoniation-granulation
- Bulk blending
- Liquid mixing

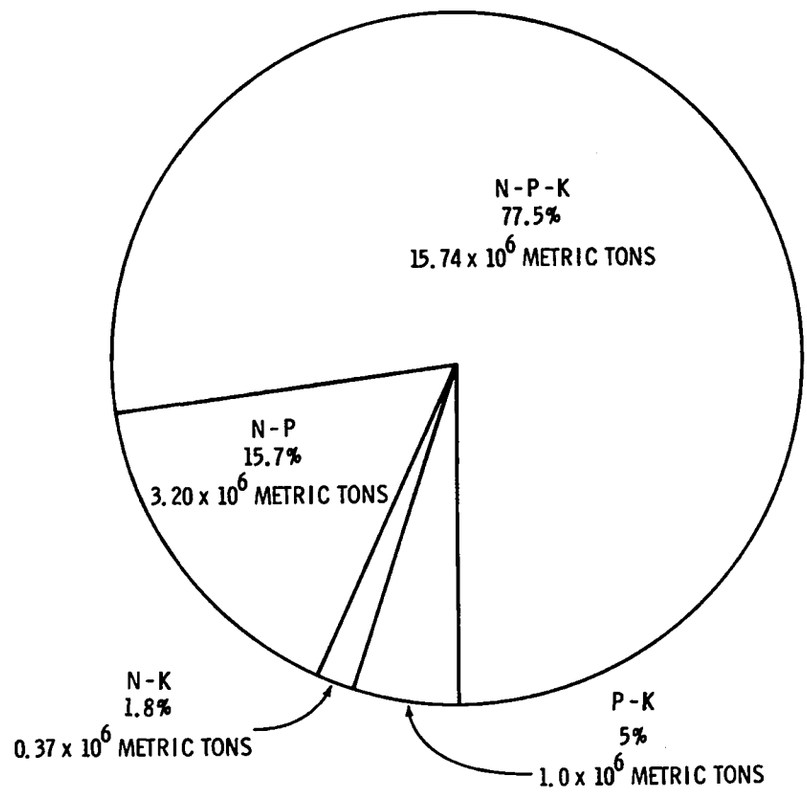

Figure 3. Proportion of mixed fertilizer grades consumed in 1973

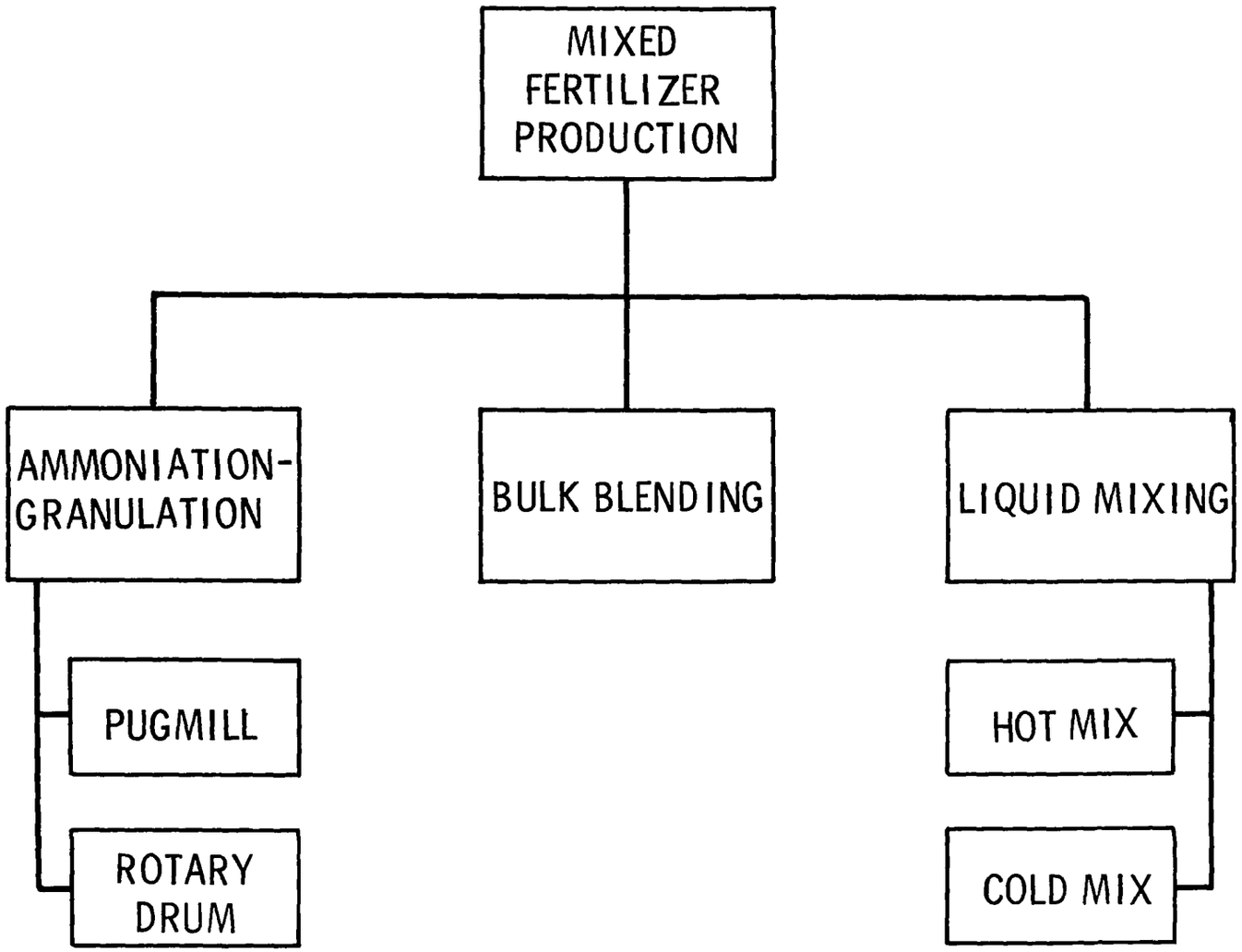

Figure 4. Three types of fertilizer mixing plants

The ammoniation-granulation and bulk blending plants produce a dry, granular fertilizer mixture, while liquid mixing plants produce a liquid mixture. For comparison, a schematic process flow diagram for each type of production plant is shown in Figure 5.

Ammoniation-granulation plants chemically react liquid and dry raw materials (such as ammonia, phosphoric acid, phosphate compounds, sulfuric acid, and potash) in a granulator to produce a dry, granular mixed fertilizer. Each granule produced by this method contains portions of all three nutrients. The basic process differences among these plants are the type of granulator used and the raw materials used to produce the various grades of fertilizer.

Bulk blending plants physically mix dry fertilizer materials such as diammonium phosphate, urea-ammonium nitrate, and potash in a mixer to produce, without chemical reaction, a dry, granular mixed fertilizer. These plants differ in types of mixers and plant layout.

There are two types of liquid mixing plants--hot and cold mix. Hot mix plants chemically react phosphoric acid, ammonia, urea, and potash to produce a liquid mixed fertilizer. This type of plant is termed "hot" mix because of the exothermic reaction between ammonia and phosphoric acid. Cold mix plants physically mix liquid materials in a mixer to produce the desired liquid mixed fertilizer without a chemical reaction.

According to the Fertilizer Division of the Tennessee Valley Authority (TVA) at Muscle Shoals, Alabama, there were 195 ammoniation-granulation plants, 5,640 bulk blending plants, and 2,768 liquid mixing plants in the U.S. in the 1973

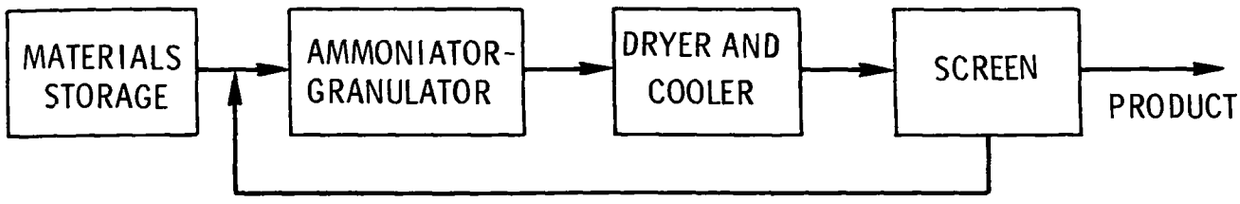

(a) AMMONIATION - GRANULATION

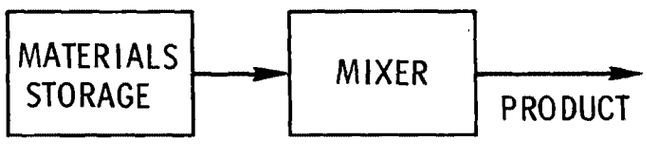

(b) BULK BLENDING

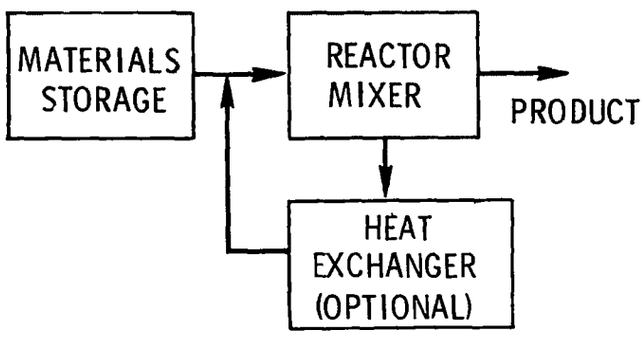

(c) LIQUID MIXING

Figure 5. Basic process flow diagrams for fertilizer mixing plants

fertilizer year.[3,4] The total of 8,603 fertilizer mixing plants in the U.S. should not vary by more than ±200 plants.

In terms of production, ammoniation-granulation plants (excluding diammonium phosphate plants) produce a majority (45%) of the mixed fertilizers.[5] Figure 6 gives 1973 production figures for all three types of mixing plants.

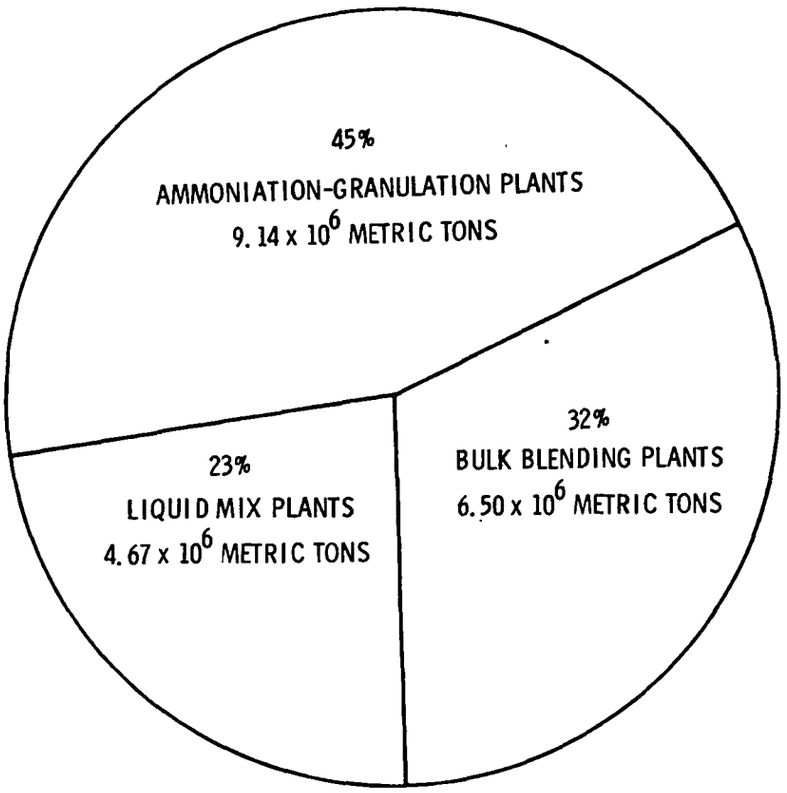

Figure 6. Fertilizer production by the three types of mixing plants

---

[3]Private communications. N. L. Hargett. National Fertilizer Development Center, TVA, Muscle Shoals, Alabama.

[4]Private communications. Dr. W. C. White. The Fertilizer Institute, Washington, D.C.

[5]Harre, E. A., and J. N. Mahan. The Supply Outlook for Blending Materials. In: TVA Fertilizer Bulk Blending Conference. Tennessee Valley Authority. Muscle Shoals, Alabama. Bulletin Y-62. August 1973. p. 9-21.

Production statistics for the three types of fertilizer mixing plants are given in Table 5. The total annual production values for these plants were calculated based on the market percentages shown in Figure 6. The values for the annual production rates for individual plants reflect a wide range of mixing plant sizes; from small, seasonal, batch-type operations to large, yearly, continuous operations. Since detailed plant production rates are not available, the total annual production was divided by the number of plants (e.g., [9.14×10^6 metric tons/year] ÷ 195 plants = 46.9×10^3 metric tons/year) to calculate average plant production rates.

The size of a fertilizer mixing plant is expressed in terms of its designed hourly production rate. A bulk blend plant, for example, may have a production capacity of 18 metric tons/hr. However, due to the plant's batch-type operation, it may only average 1.8 metric tons/hr. The average design production capacity for ammoniation-granulation plants is 22.5 metric tons/hr, and for bulk blend and liquid mix plants this value is 9 metric tons/hr to 18 metric tons/hr.

Due to the nature of the agricultural industry, fertilizer mixing plants operate on a seasonal basis. The length of the operating period depends on the geographical location of the mixing plant and the crops being fertilized. In the South the mixing season may last from 8 to 10 months/yr, while in the northern states this season may only last 4 to 5 months/yr. On a national basis, the peak operating periods for mixing fertilizer are in the months of February to July and October to December.

On a national average, ammoniation-granulation plants operate 12 hr/day, 5 days/week in January; 16 hr/day, 6 days/week from February to May; 12 hr/day, 5 days/week from June to

Table 5. PRODUCTION STATISTICS FOR FERTILIZER MIXING PLANTS IN 1973

Statistic	Ammoniation-granulation	Bulk blend	Liquid mix
Number of plants	195	5,640	2,768
Total annual production, 10^6 metric tons	9.14	6.50	4.67
Annual plant production rate, 10^3 metric tons/yr	9.0 to 90.0	0.450 to 3.2	0.450 to 2.3
Average annual production rate, 10^3 metric tons/yr	46.9	1.15	1.69
Plant design hourly production rate, metric tons/hr	9 to 45	4.5 to 45	9 to 45
Average annual operating period, hr/yr	3,216	1,280	1,280
Actual average production rate, metric tons/hr	14.57	0.90	1.32

November; and are closed down in parts of November and December for annual maintenance. The variation in operating periods for bulk blend and liquid mix plants fluctuates considerably across the nation because these plants supply fertilizer to a small area (usually less than 93 km from the plant). Therefore, their operating periods are dependent on the crops planted and local weather conditions. On the average, bulk blend and liquid mix plants operate 8 hr/day, 5 days/week, 8 months/yr.

Using the average operating periods and the average annual production rates, the average hourly production rates were calculated. These values, shown in Table 5, further illustrate the batch-type nature of mixing plant operation.

B. RAW MATERIALS

1. Primary Nutrients

The quantities of raw materials consumed by fertilizer mixing plants in the U.S. as reported by the 1972 Census of Manufactures[6] (in Standard Industrial Classifications 2874 and 2875) are shown in Table 6. Organic ammoniates listed in Table 6 include natural organic materials such as dried blood, castor pomace, compost, cottonseed meal, dried manure, activated sewage sludge, and tankage.

Due to the nature of the various raw materials reporting systems and the complexity of the fertilizer industry, it is not possible to extract the amount of raw materials used by each of the three types of mixing plants (e.g., how much diammonium phosphate is used by bulk blending or liquid mixing

[6] 1972 Census of Manufactures, Preliminary Report. U.S. Department of Commerce. Washington. Publication No. MC 72(P)-28G-1, -2, and -3. January 1974. 12 p.

Table 6. RAW MATERIALS CONSUMED BY FERTILIZER MIXING PLANTS IN 1972[6]

Material	Basis	Quantity, 10^3 metric tons
Nitrogenous material:		
Ammonia, anhydrous	100% NH_3	1,768.7
Ammoniating, or nitrogen solution including mixtures containing urea	100% N	487.3
Ammonium nitrate	100% NH_4NO_3	324.9
Sodium nitrate	100% $NaNO_3$	12.0
Ammonium sulfate	100% $(NH_4)_2SO_4$	664.0
Urea and calurea	100% N	102.6
Other nitrogenous materials, including potassium nitrate, calcium cyanamide, ammonium nitrate and limestone mixtures	100% N	122.7
Organic ammoniates	100% N	92.7
Phosphatic materials:		
Normal superphosphate (<20% P_2O_5)	100% P_2O_5	540
Concentrated superphosphate (≤40% P_2O_5)	100% P_2O_5	1,440
Other phosphatic materials, including wet base goods, ammonium phosphates, etc.	100% P_2O_5	402.8
Potassic materials:		
Muriate of potash	60-62% K_2O	2,439.6
Other potash bearing material	-	309.0
Inert fillers and secondary plant food	-	1,070.4
Sulfuric acid	100% H_2SO_4	810
Phosphoric acid	100% P_2O_5	720

plants). However, the following materials are used only by ammoniation-granulation plants and hot mix liquid mixing plants: anhydrous ammonia, sulfuric acid, and phosphoric acid. Therefore, based on the production values of these plants, ammoniation-granulation plants consume 84% of these three raw materials and hot mix liquid mixing plants consume 16%.

2. Secondary and Micronutrient Materials

In addition to the primary nutrients, secondary and micronutrients are added to mixed fertilizers when requested by the user. The U.S. Department of Agriculture reported that 1.18×10^6 metric tons of secondary and micronutrient fertilizer materials were consumed in the U.S. in 1972.[1] This value compares favorably with the 1.07×10^6 metric tons of inert fillers and secondary plant food reported by the 1972 Census of Manufactures. The types and quantities of materials consumed are shown in Table 7. It is not possible to determine the exact quantities of these materials that are actually mixed with mixed fertilizers and with the direct application materials. Therefore, the total consumption value serves as an upper limit for the quantity of secondary and micronutrients added to mixed fertilizers. If all of these materials were added to mixed fertilizers, they would constitute 5.5% of the total bulk weight. However, if one subtracts the 887×10^3 metric tons of calcium sulfate (gypsum) used as direct application material in California as a source of sulfur and calcium, the secondary and micronutrient materials would be 1.4% of the mixed fertilizer.

The secondary and micronutrient compounds consist of inorganic sulfate and oxide compounds and organic chelating compounds. The principal inorganic and organic forms of the

Table 7. QUANTITIES OF SECONDARY AND MICRONUTRIENT FERTILIZER MATERIALS CONSUMED IN THE U.S. IN 1972[1]

Material	Quantity, metric tons
Aluminum compounds	139
Boron compounds	4,495
Calcium sulfate (gypsum)[a]	1,076,464
Copper compounds	513
Iron compounds	9,300
Magnesium compounds	1,352
Manganese compounds	3,137
Sulfur	25,361
Zinc compounds	20,681
Other	41,232
Total	1,182,675

[a]California alone consumes 887,585 metric tons as direct application material.

micronutrients and their applicability to the different types of mixed fertilizers are shown in Tables 8 and 9.

Chelating agents are added to the micronutrient mixtures to keep the trace metals in a soluble form. Among the best chelating agents are ethylenediaminetetraacetic acid (EDTA), hydroxyethylenediaminetriacetic acid (HEDTA), and diethylenetriaminepentaacetic acid (DTPA).[1]

3. Pesticides

In the past few years there has been a growing trend toward applying pesticides, particularly herbicides, along with

Table 8. PRINCIPAL INORGANIC FORMS OF MICRONUTRIENTS[7]

Nutrient element	Common or trade name	Chemical name	General chemical formula	Elemental %	Material form	Use best adapted to: Blend solid	Liquid suspension	Clear liquids	Ammon. gran.	Foliar in water
Boron	Fertilizer Borate 48	Sodium tetraborate	$Na_2B_4O_7 \cdot 5H_2O$	14-15	Granular or powder	X				
	Tronabor Traco borate					X	X		X	
	Fertilizer borate 68		$Na_2B_4O_7$	21-22	Granular	X				
	Boro spray	Sodium pentaborate	$Na_2B_{10}O_{16} \cdot nH_2O$	18-19	Powder			X	X	X
	solubor			20-21	Powder			X	X	X
	Frit 237G	Boron-phosphate	(Amorphous)	10	Granular	X				
	Frit 237	Frit			Powder	X	X		X	
Chlorine	Muriate of potash	Potassium chloride	KCl	47-48	Granular	X	X	X	X	
Copper	Copper sulfate or blue vitriol	Cupric sulfate	$CuSO_4 \cdot 5H_2O$	25-26	Granular	X				
			$CuSO_4 \cdot H_2O$	35-36	Powder	X	X	X	X	X
	Copper oxide	Cupric oxide	CuO	75-90	Powder	X	X		X	
	Frit 177G	Copper-phosphate	(Amorphous)	40	Granular	X				
	Frit 177	Frit			Powder	X	X		X	
Iron	Iron sulfate	Ferric or ferrous sulfate	$Fe_x(SO_4)_y \cdot nH_2O$	18-24	Granular	X[a]				
					or powder	X	X[a]		X[a]	
	Iron carbonate	Ferric or ferrous carbonate	$Fe_x(CO_3)_y$	40-50	Granular	X[a]				
					or powder	X	X[a]		X[a]	
	Frit 227G	Iron-phosphate	(Amorphous)	40	Granular	X				
	Frit 227	Frit			Powder	X	X		X	
Manganese	Manganese sulfate	Manganese sulfate	$MnSO_4 \cdot nH_2O$	23-28	Granular	X				
					or powder	X	X	X	X	X
	Manganese oxide	Manganous oxide	MnO	41-62	Granular	X				
					or powder	X	X		X	
	Frit 187G	Manganese-phosphate	(Amorphous)	28	Granular	X				
	Frit 187	Frit		35	Powder	X	X		X	
Zinc	Zinc sulfate	Zinc sulfate	$ZnSO_4 \cdot nH_2O$	18-37	Granular	X				
					or powder	X	X	X	X	X
	Zinc oxide	Zinc oxide	ZnO	57-58	Powder		X	X	X	
	Zinc-Ite	Zinc oxide	ZnO	25% Zn	Granular	X				
	Frit 247G	Zinc-phosphate	(Amorphous)	28-40	Granular	X				
	Frit 247	Frit			Powder	X	X		X	

[a]Generally, iron is not effectively taken up by the plant when applied with fertilizer in the soil.

- - - - - - - - - -

[7]Curley, R. D., and M. C. Sparr. Systems for Supplying Micronutrients. In: TVA Fertilizer Conference. Tennessee Valley Authority. Muscle Shoals, Alabama. Bulletin Y-78. August 1974. p. 46-54.

Table 9. PRINCIPAL ORGANIC FORMS OF MICRONUTRIENTS[7]

Element	Chelate or complex	Elemental %	Material form	Best adapted soils neutral to	Use best adapted to			
					Blend or coat solid	Liquid suspension	Clear liquids	Foliar in water
Copper	EDTA	7.5	Liquid	Acid			X	
	EDTA	13.0	Powder	Acid	X	X		
	DTPA	5.098	Liquid	Alkaline			X	
	Polyflavonoid	6.7	Powder	-				X
	Lignosulfonate	5-6	Powder	-				X
	Rhizochyme	6.0	Liquid	-				X
Iron	EDTA	14.0	Powder	Acid	X	X		
	EDTA	5-8	Granule	Acid	X			
	HEEDTA	5.0	Liquid	Acid			X	
	HEEDTA	9.0	Powder	Acid	X	X		
	HEEDTA	5.0	Granule	Acid	X			
	DTPA	10.0	Powder	Alkaline				X
	EDDHA	6.0	Powder	Alkaline			X	
	Polyflavonoid	9.6	Powder	-				X
	Lignosulfonate	5-6	Powder	-				X
	Lignosulfonate	11.0	Granule	-				X
	Rhizochyme	6.0	Liquid	-				X
Manganese	EDTA	5.0	Liquid	Acid			X	
	EDTA	12.0	Powder	Acid	X[a]	X		
	HEEDTA	5.0	Liquid	Acid			X	
	HEEDTA	9.0	Powder	Acid	X[a]	X		
	Polyflavonoid	8.5	Powder	-				X
	Lignosulfonate	5-7	Powder	-				X
	Rhizochyme	7.0	Liquid	-				X
Zinc	EDTA	6-9	Liquid	Acid			X	
	EDTA	14.5	Powder	Acid	X	X		
	DTPA	6-10	Liquid	Alkaline			X	
	Polyflavonoid	10.0	Powder	-				X
	Lignosulfonate	7.0	Powder	-				X
	Lignosulfonate	14.0	Granular	-				X
	Rhizochyme	7.0	Liquid	-				X

[a]Agronomic effectiveness may be nil on soils containing high soluble iron content.

fertilizers.[9] This application technique reduces the number of trips a farmer has to make over his crops, thus reducing operating costs and labor expenses. For example, one midwest farm service charges 0.037 cents/m^2 ($1.50/acre) to custom apply fertilizers and 0.049 cents/m^2 ($2.00/acre) to custom apply straight pesticide. However, the service makes no additional charge for mixing a herbicide with the fertilizer and applying them jointly, resulting in a cost of 0.037 cents/m^2 ($1.50/acre) as compared to 0.086 cents/m^2 ($3.50/acre).[8]

Pesticide is an all-inclusive term covering fungicides, herbicides, insecticides, miticides, defoliants, rodenticides, and repellents.[10] However, only herbicides are mixed with fertilizers for joint crop application. Liquid mix plants have added herbicides to their fertilizers longer than other mixing plants because it is easier for them to mix the two components and insure a homogeneous solution. Approximately 80% of the liquid mix plants add herbicides.[8] Bulk blend plants have more difficulty in applying herbicides to their mixtures. Successful approaches to the problem include impregnating and coating the dry fertilizer with herbicide solutions. Only about 30% of the bulk blend plants add herbicides to their mixed fertilizers. Ammoniation-granulation plants usually (<1% of tonnage) do not add herbicides to their mixtures.

Estimated amounts of herbicides mixed with fertilizers in 1971 are shown in Table 10. Since these values are not

---

[8]Feed and Weed. Special Report. Farm Chemicals, 1974. 31 p.

[9]Private communications. H. L. Balay. National Fertilizer Development Center, TVA, Muscle Shoals, Alabama.

[10]Farm Chemicals Handbook - 1973, Pesticide Dictionary. Willoughby, Ohio, Meister Publishing Co., 1973. 191 p.

Table 10. ESTIMATED QUANTITIES OF SELECTED HERBICIDES (ACTIVE INGREDIENTS) APPLIED TO CROPS WITH MIXED FERTILIZERS[11]

Type of herbicide	Quantity applied with mixed fertilizer, metric tons/yr
Inorganic herbicides	196
Organic herbicides:	
Arsenicals	924
Phenoxys:	
2,4-D	3,922
2,4,5-T	158
MCPA	387
Other phenoxy	71
Total	4,538
Phynyl urea:	
Diuron	145
Linuron	213
Fluometuron	393
Other phenyl urea	31
Total	781
Amides:	
Propachlor	2,799
Propanil	785
Analap	393
Alachlor	1,740
Other amides	94
Total	5,811
Carbamates:	
EPTC	520
Pebulate	125
Vernolate	441
Butylate	698
Other carbamates	379
Total	2,163
Dinitro group	848
Triazines:	
Atrazine	6,748
Propazine	374
Simazine	203
Other triazines	170
Total	7,495
Benzoics:	
Amiben	1,127
Dicamba	50
Other benzoic	14
Total	1,191
Other organics:	
Trifluralin	1,348
Nitralin	319
Dalapon	122
Norea	156
Fluorodifen	157
Others	566
Total	2,667
Total organic herbicides (excluding petroleum)	24,417
Total herbicides (excluding petroleum)	24,613
Petroleum	16,835
Total herbicides	43,448

compiled and reported in the literature, an upper limit was calculated based on the following assumptions:

- U.S.D.A. total 1971 herbicide consumption values for crop application were used as a base;[11]
- 50% of these herbicides were applied with fertilizers;
- 52% of the above quantity of herbicides were applied with mixed fertilizers (based on the ratio of mixed fertilizers to total fertilizer); and
- 75% of the value in the third assumption was applied with liquid mixed fertilizers and 25% was applied to bulk blended fertilizers.

The July 1974 U.S.D.A. publication entitled, "Farmer's Use of Pesticides in 1971"[11], is the most current and best available source of information concerning the distribution of pesticides in the U.S.

The geographical distribution of 1971 U.S. herbicide consumption is shown in Figure 7. The herbicide product used most by farmers in 1971 was atrazine, accounting for 25% of all herbicides used. Atrazine is used for season-long weed control in corn, sorghum, and certain other crops. Other major herbicides include 2,4-D (15%) and propachlor (11%). These herbicides are used to control weeds in cereal and broadleaf crops. In 1974 EPA banned the use of 2,4-D. The majority (>80%) of the herbicides mixed with fertilizers are applied as pre-emergence herbicides, as opposed to post-emergence herbicides.[8]

---

[11]Farmers' Use of Pesticides in 1971. U.S. Department of Agriculture. Washington. Agriculture Economic Report No. 252. July 1974. 56 p.

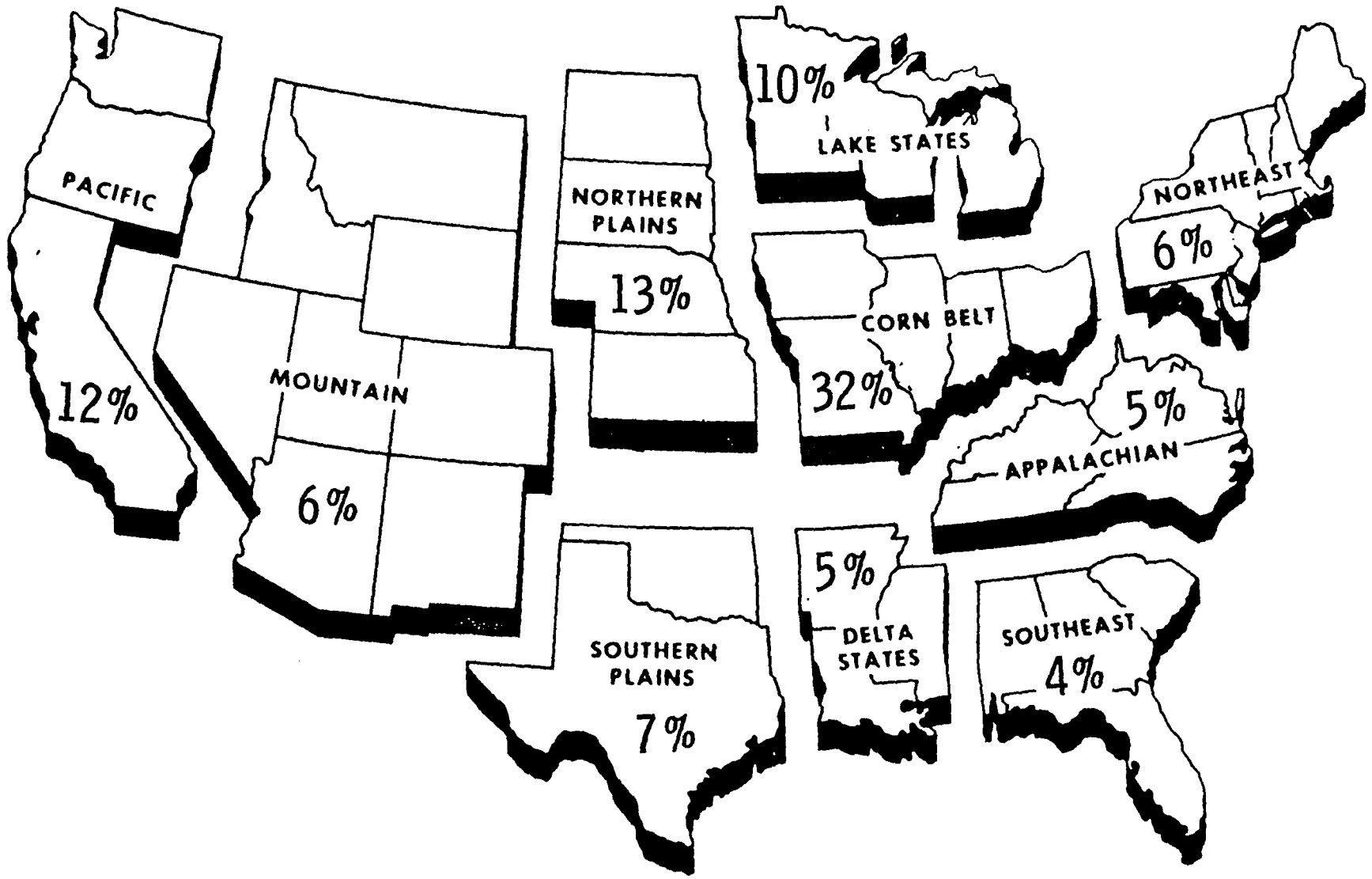

Figure 7. Geographical distribution of herbicides applied to crops in 1971

C. AMMONIATION-GRANULATION PLANTS

1. Process Description

In 1973, ammoniation-granulation mixing plants produced 45% (9.14×10^6 metric tons) of all mixed fertilizers consumed in the U.S. The 195 ammoniation-granulation plants represent 2.3% of the total number of fertilizer mixing plants in the country. They have the largest production capacities of all mix plants, ranging from 9 to 90×10^3 metric tons/yr, and the average production rate per plant is 46.9×10^3 metric tons/yr. The majority (56%) of these mixing plants are located in the grain belt states of Illinois, Indiana, Iowa, Minnesota, Missouri, Nebraska, and Ohio, and in the phosphate rock mining states of Alabama, Georgia, and Florida (Figure 8).

The earliest process for making a homogeneous, granular, mixed fertilizer involved wetting a mixture of solid plant nutrient materials with sufficient water to cause the formation of granules.[12] Ammonium sulfate, phosphate rock, and potassium chloride were the staple raw materials. By the early 1950's, more concentrated fertilizers were produced by replacing ammonium sulfate with ammonium nitrate and superphosphates with ammonium phosphate slurries. The wider range of raw materials used later included ammoniating solutions, ammoniated superphosphates, calcium metaphosphates and phosphate slurries. Today, ammoniation (the chemical combination of free ammonia with phosphoric acid) is practiced in conjunction with granulation.[13] The exothermic

---

[12] Chemistry and Technology of Fertilizers. V. Sauchelli (ed.). New York, Reinhold Publishing Corp., 1960. 424 p.

[13] Shreve, R. N. Chemical Process Industries, 3rd Edition. New York, McGraw-Hill Book Co., 1967. 489 p.

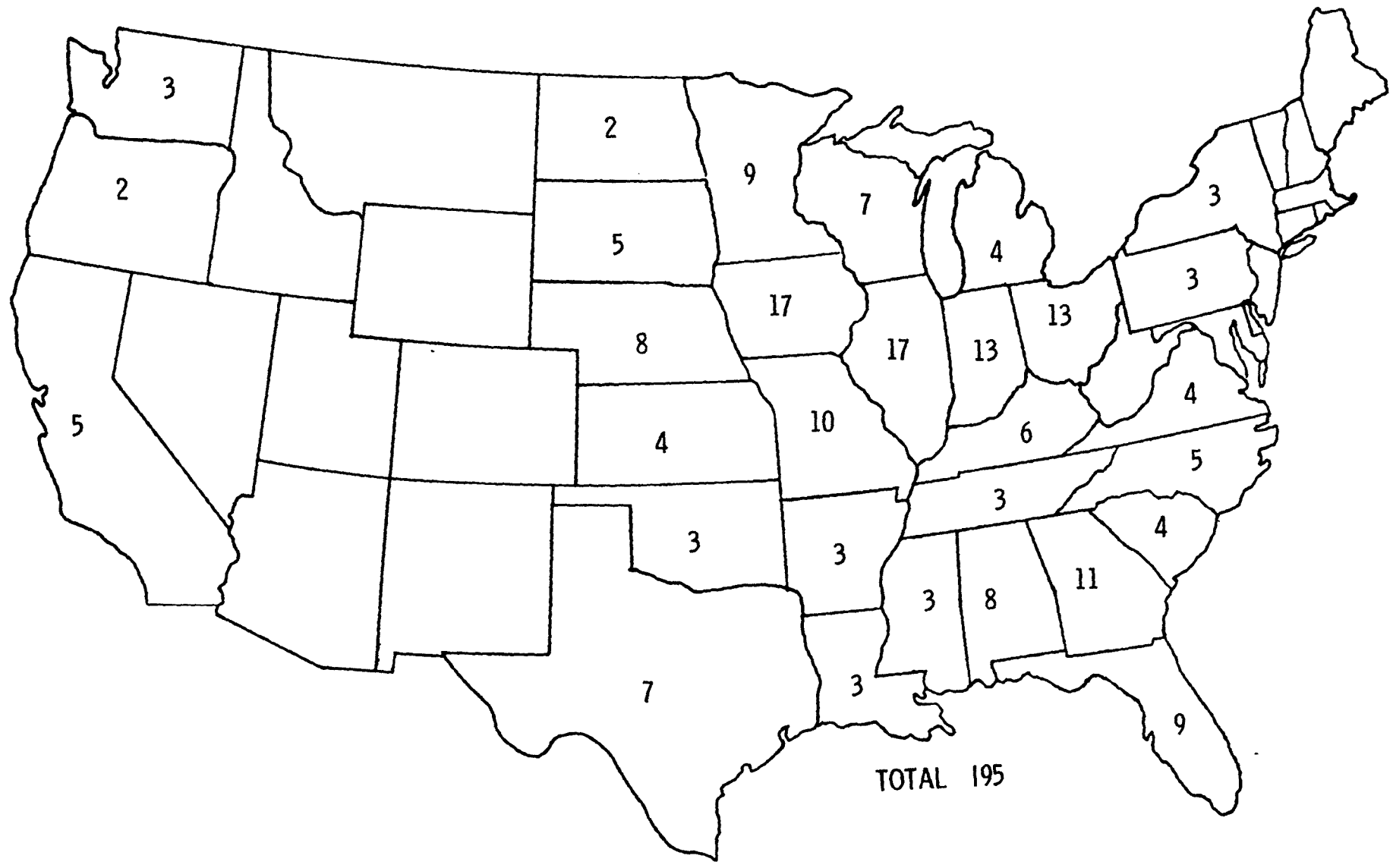

Figure 8. Geographical distribution of ammoniation-granulation mixing plants in 1973

heat of reaction due to ammoniation serves to increase chemical reactions, granulation, and moisture vaporization. This procedure results in a more concentrated fertilizer and requires less water.

Superphosphoric acid, a term used to define a range of mixtures of ortho- and polyphosphoric acids, is anhydrous and reacts with ammonia and other materials to form soluble salts that increase the liquid phase in the granulator with the addition of a minimum amount of water.[14] The two basic salts are mono- and diammonium phosphate which are produced in the granulator by the following reactions, depending on the amount of ammonia added:[15]

$$H_3PO_4 + NH_3 \rightarrow (NH_4)H_2PO_4 \qquad (1)$$

$$H_3PO_4 + 2NH_3 \rightarrow (NH_4)_2HPO_4 \qquad (2)$$

A generalized flow diagram of a fertilizer ammoniation-granulation plant is shown in Figure 9. The process consists of five basic stages:

Stage 1. Mixing - where the raw solid materials are mixed and screened to the proper size range, about 1 mm to 4 mm in diameter.

Stage 2. Ammoniation-granulation - where the physical mixing and chemical reactions of raw feeds with recycled material occur to form a granular fertilizer.

Stage 3. Drying - where surplus moisture is removed to a level dictated by the storage properties of the fertilizer, around 1.8%.

---

[14]Achorn, F. P., and H. L. Balay. Phosphoric Acid: Shipment, Storage, and Use in Fertilizers. Fertilizer Solutions Magazine. 17(5), September-October 1973.

[15]Slack, A. V. Fertilizer Developments and Trends - 1968. Park Ridge, New Jersey, Noyes Development Corp., 1968. 405 p.

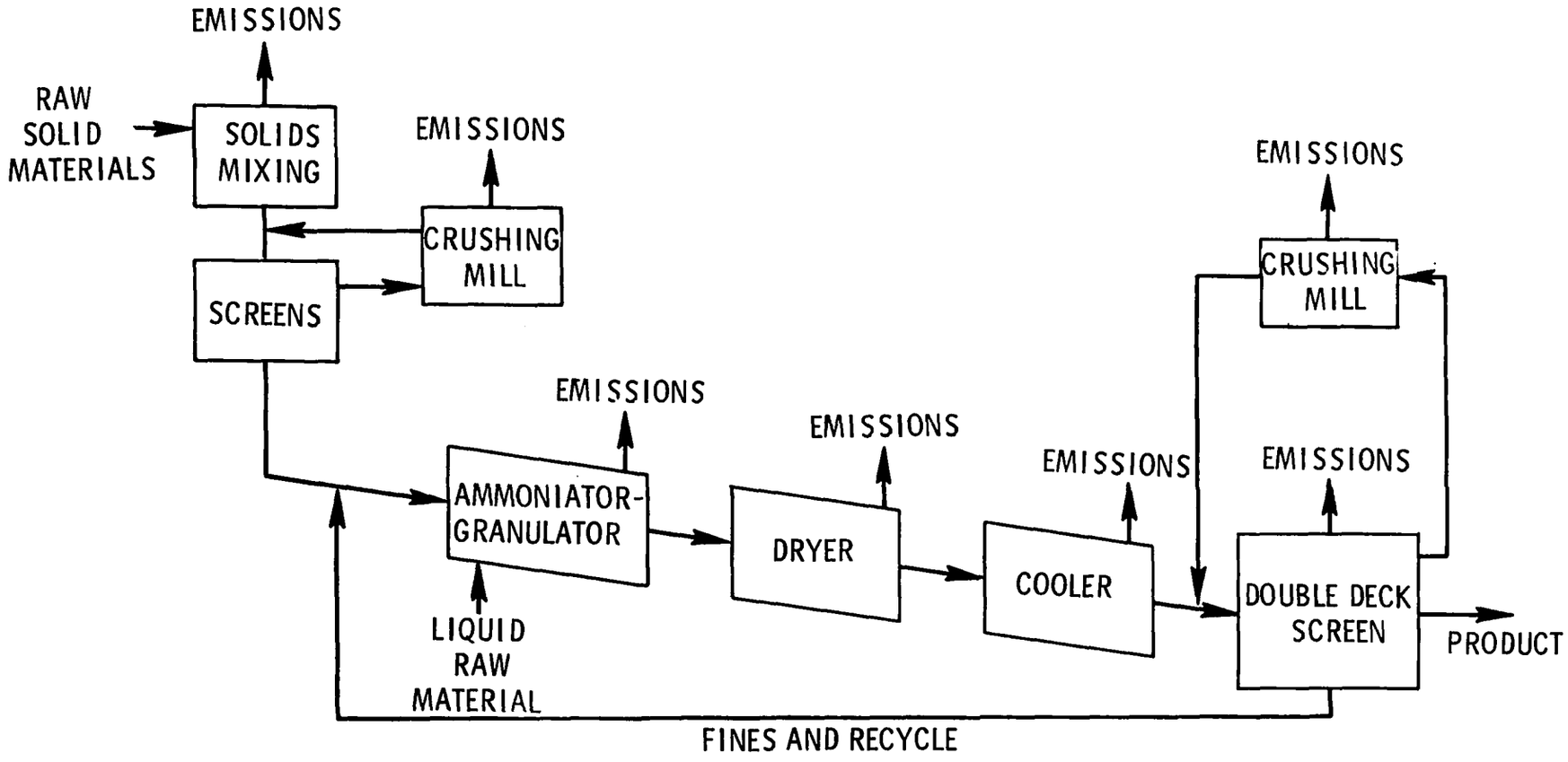

Figure 9. Generalized flow diagram of an ammoniation-granulation fertilizer plant

Stage 4. Cooling - where the fertilizer is cooled to ambient temperature without adding moisture.

Stage 5. Classification - where the dried material is screened to the desired size range, 1 mm to 4 mm in diameter. The oversize is crushed and returned to the screen. The undersize is returned to the ammoniator-granulator.

The presence of a recycle in the generalized manufacturing process results from the inability of the granulation process to produce all the granules within the desired product size range (i.e., 1 mm to 4 mm).

The primary purpose of the ammoniation-granulation mixer is to agitate the bed of solids to ensure adequate mixing of the solid and liquid phases and to promote the particle to particle collisions necessary for granule growth. There are four basic mixer designs used by ammoniation-granulation mixing plants:

- Pan granulator
- Batch-mix ammoniator
- Pugmill ammoniator
- Rotary-drum ammoniator

The TVA has the only pan granulator in use today, which is used primarily for research production.[16] It is estimated that batch-mix ammoniators are used for less than 1% of the total production of mixed fertilizers.[9] These two types of mixing plants are therefore omitted from the detailed process discussion and from further individual consideration.

---

[16]Private communications. E. A. Harre. National Fertilizer Development Center, TVA, Muscle Shoals, Alabama.

2. Pugmill Ammoniator

A pugmill is comprised of a U-shaped trough carrying twin contrarotating shafts upon which are mounted strong blades or paddles. The action of the paddles agitates, shears, and kneads the solid-liquid mix, and transports the material along the trough. Solid raw materials and recycled fines are fed to the inlet end of the pugmill and the liquids are injected under the bed.[17]

Granulation occurs, or at least starts, in the pugmill and is controlled by the formulation, by the recycling rate of the fines, or by the addition of water. Additional granulation occurs in the dryer. From the dryer the product passes into a cooler and then to a double-deck screen. The oversize (>4 mm) is crushed and returned to the screen while the fines (<1 mm) are recycled to the pugmill.

It is estimated that pugmill ammoniator mixing plants are used in less than 5% of the total production of mixed fertilizers in the U.S.[3,9] In addition, pugmill sources of emissions and emission characteristics are the same as those from rotary-drum ammoniation mixing plants. Therefore, only the rotary-drum ammoniation-granulation fertilizer mixing plants will be discussed in detail.

3. Rotary-Drum Ammoniator-Granulator

The majority (approximately 95%) of the ammoniation-granulation plants in the U.S. use the rotary-drum mixer of the type

---

[17]Powell, T. E. Granulation in the Fertilizer Industry. Process Technology International, 18:271-278, June-July 1973.

developed and patented by the TVA.[9,18] The basic rotary-drum ammoniator, Figure 10, consists of an open end, slightly inclined rotary cylinder, with retaining rings at each end and a scraper or cutter mounted inside the drum shell. The drums vary in diameter from 2 m to 3 m and in length from 3 m to 6 m. A rolling bed of solid material is maintained in the unit while the liquids (such as ammonia and sulfuric acid) are introduced through horizontal, multioutlet distributor pipes set lengthwise of the drum under the bed.

The process flow diagram of a rotary-drum ammoniation-granulation mixing plant with typical emission controls is shown in Figure 11. Solid nutrient materials such as normal superphosphate, triple superphosphate and potash are weighed, mixed, and added to the mixer in exact proportions. Liquid solutions of ammonia, phosphoric acid, and water are added to the bed of solids in the mixer. Granulation occurs in the rotary drum and finishes in the dryer. The temperature of the granular fertilizer in the rotary drum reaches 85°C to 105°C while the temperature of the off-gases from the rotary drum reaches 38°C to 77°C. The temperature of the off-gases from the dryer ranges from 93°C to 104°C and from the cooler, from 4°C to 27°C. The granular mixed fertilizer then passes to the screen system. A double-deck screen is used to separate the oversized (>4 mm), product-sized (1 mm to 4 mm), and undersized (<1 mm) particles (fines). The oversized particles are crushed and recirculated back to the screen. The undersized particles are recycled back to the ammoniator-granulator. The finished product is either stored, bagged, or bulk loaded into trucks.

---

[18]Private communications. J. C. Barber. National Fertilizer Development Center, TVA, Muscle Shoals, Alabama.

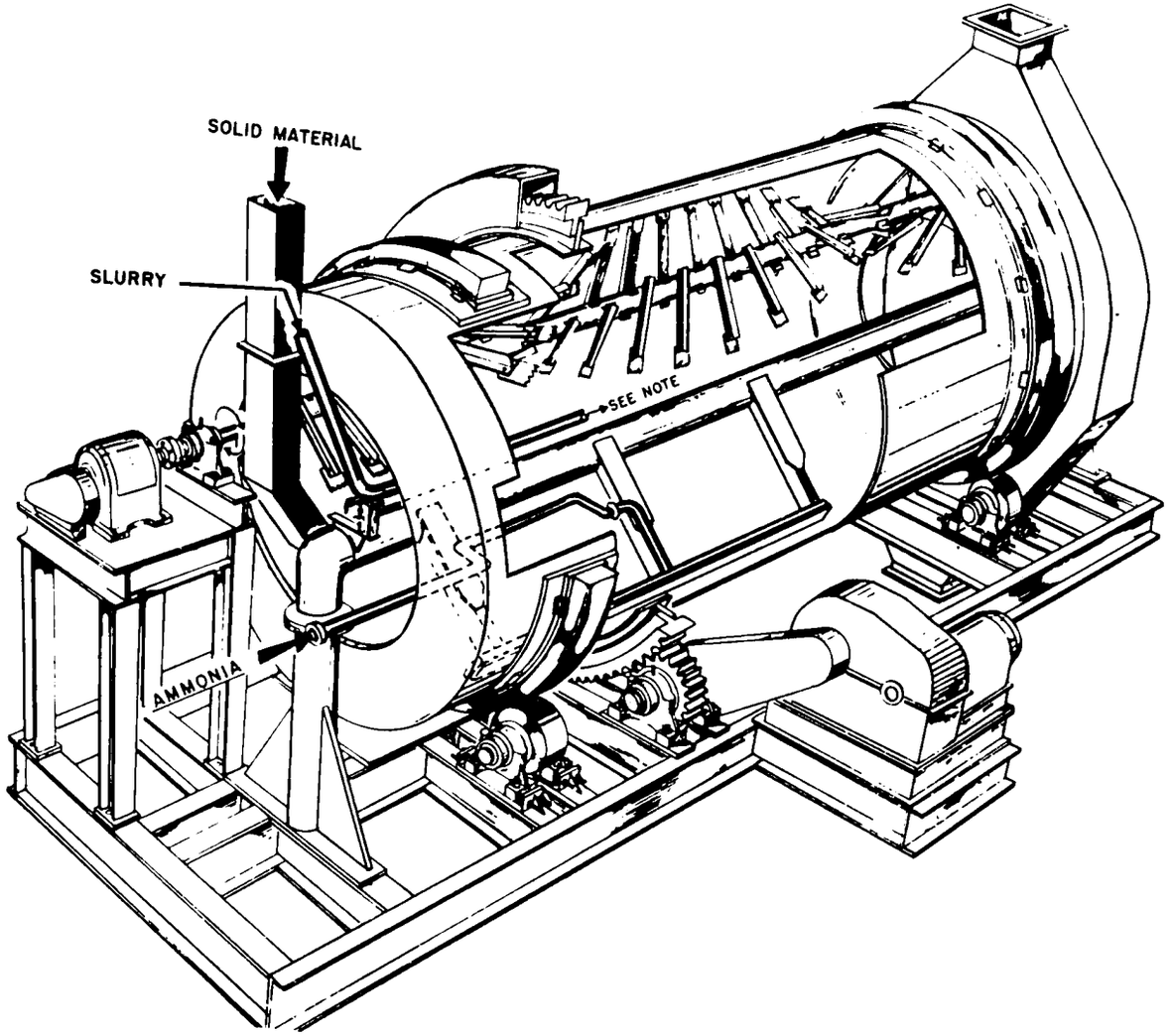

Figure 10. TVA continuous ammoniator-granulator

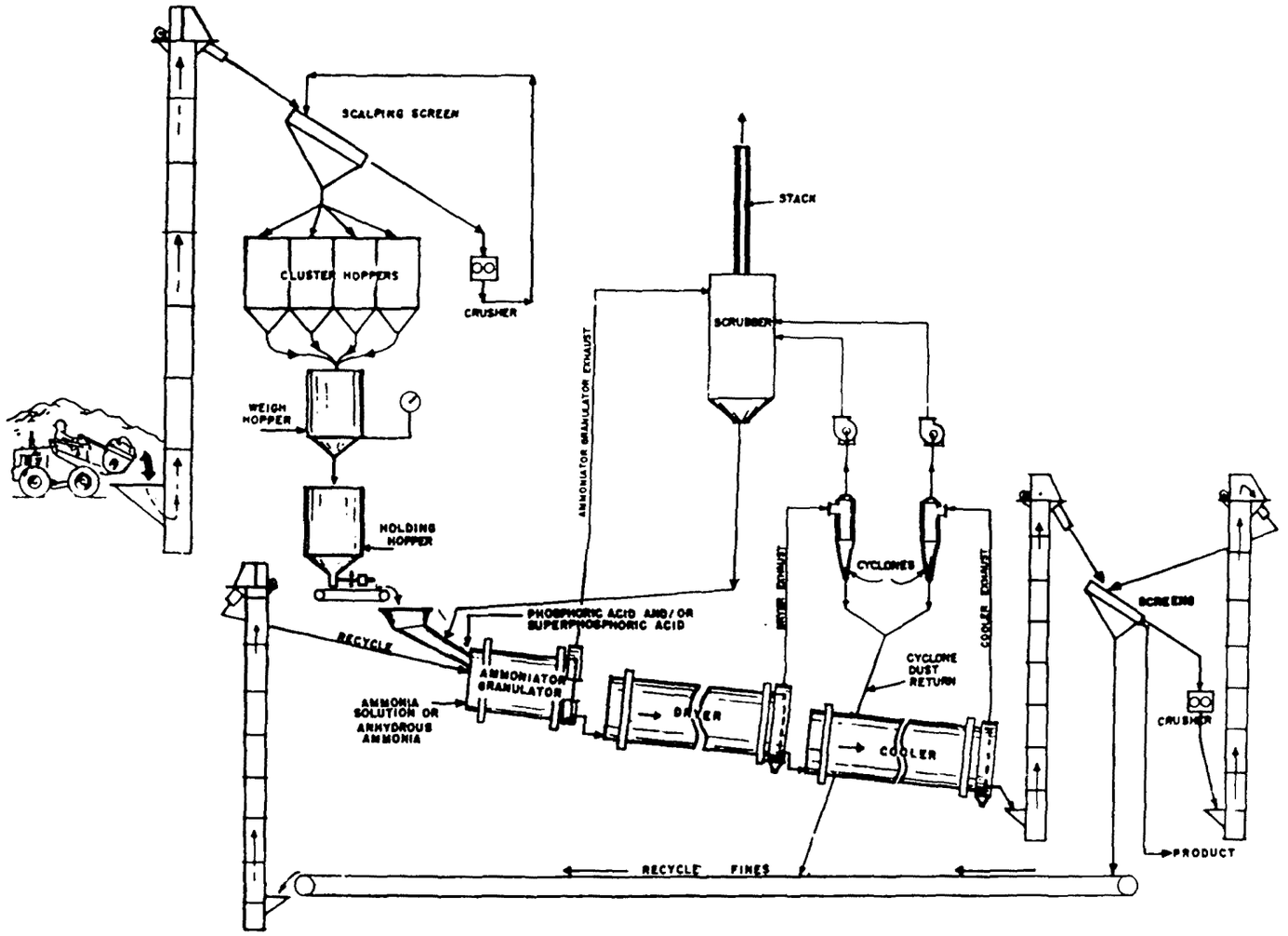

Figure 11. Conventional ammoniation-granulation plant with a rotary-drum ammoniator[14]

The rotary-drum mixer produces a more rounded, less dense product than the pugmill. However, successful operation depends upon the efficiency of the liquid distributors. Poor granulation results from incorrect siting of liquor spray nozzles. Submerged acid spargers, made from black iron or stainless steel, are subject to corrosion, particularly when used with chloride-containing formulations. Poor mixing of the bed produces high ammonia losses and localized heats of reaction which can result in flash fires.

4. Raw Materials

The types of raw materials consumed by ammoniation-granulation plants are shown in Table 11. The formulation for mixed fertilizers varies from plant to plant. For example, sulfuric acid can be used instead of phosphoric acid for ammoniation. Therefore, one plant that produces a mixed grade of 12-12-12 will not necessarily use the same raw materials as another plant producing the same grade. The types and amounts of raw materials that can be used to produce a 12-12-12 grade of mixed fertilizer by an ammoniation-granulation plant are shown in Table 12.

Table 11. TYPES OF RAW MATERIALS CONSUMED BY AMMONIATION-GRANULATION PLANTS

Material	Formula or description
Ammonia, anhydrous	NH_3
Ammonium sulfate	$(NH_4)_2SO_4$
Ammonium nitrate	NH_4NO_3
Urea	NH_2CONH_2
Normal superphosphate, <20% P_2O_5	
Triple superphosphate, ≥40% P_2O_5	
Phosphoric acid	H_3PO_4
Potash	KCl
Sulfuric acid	H_2SO_4
Filler	sand, limestone

Table 12. FORMULATION DATA FOR AN AMMONIATION-GRANULATION PLANT[19]
(12-12-12 grade, 13.6 metric tons/hr production rate)

Formulation, g/kg of product	Mixture			
	1	2	3	4
Anhydrous ammonia	120	151	39	43
Ammonium sulfate (21% N)	125	0	428	410
Normal superphosphate	0	225	0	0
Triple superphosphate	0	0	53	0
Wet process phosphoric acid (54% P_2O_5)	170	145	75	155
Superphosphoric acid (76% P_2O_5)	0	0	75	50
Sulfuric acid (94% H_2SO_4)	280	345	0	0
Hi-grade (42% P_2O_5)	75	0	0	0
Potash (60.5% K_2O)	194	199	200	200
Filler (sand)	67	0	143	0
Filler (1/3 limestone, 2/3 sand)	0	0	0	157

Ammoniation-granulation plants can incorporate secondary and micronutrients into the granulation process. Only inorganic forms of micronutrients can be used, however, because the organic chelates will decompose at the elevated process temperatures (65°C to 82°C).[7] The quantities of such materials consumed at these mixing plants cannot be determined. However, Table 8 indicated the types of micronutrients that can be used by ammoniation-granulation plants.

[19]Achorn, F. P., and J. S. Lewis, Jr. Equipment to Control Pollution from Fertilizer Plants. Agricultural Chemicals and Commercial Fertilizer. 27, February 1972.

5. Emission Sources

Emissions at ammoniation-granulation plants come from five process steps:

- Materials storage and handling
- Ammoniator-granulator
- Dryer and cooler
- Screen and oversize mill
- Bagging and loading

Fugitive dust consisting of the raw materials is emitted from the cluster hoppers, weighing hoppers, bucket elevators, and recycling conveyors.

Pollutant species generally emitted from the ammoniator-granulator include:

- Ammonia vapor and ammonium salts
- Chloride salts
- Fluorine compounds
- Phosphorus compounds
- Sulfur compounds
- Particulates

Ammonia related emissions include NH_3 vapor, NH_4Cl, $(NH_4)_2HPO_4$, and $(NH_4)_2SO_4$. Chlorine related emissions, due to the addition of potash, include chlorine vapor and inorganic salts, such as NH_4Cl and KCl. Fluoride emissions are a result of trace quantities (1% to 2%) of inorganic fluoride salts (e.g., CaF_2) in the phosphoric acid, normal and triple superphosphate, and filler material (e.g., sand).[20]

---

[20] Robinson, J. M., et al. Engineering and Cost Effectiveness Study of Fluoride Emissions Control, Vol. I. U.S. Environmental Protection Agency, Office of Air Programs. Washington. PB 207506. January 1972.

Emissions of fluorine will be in the form of CaF_2, SiF_4 and HF. Phosphorus emissions, reported as total phosphorus, are emitted in the particulate form and consist of $Ca_3(PO_4)_2$, $(NH_4)_2HPO_4$, H_3PO_4, and K_2HPO_3.[21] Sulfur emissions are in the form of inorganic sulfate salts such as $CaSO_4$ and K_2SO_4. However, due to the completeness of the ammoniation reaction with H_2SO_4,[18,22] these emissions are usually low (<0.1% of total) and therefore will be included with general particulate emissions.

Ammonium chloride aerosols are formed in the ammoniator-granulator when sulfuric acid reacts with potassium chloride (potash) to form hydrogen chloride which, in turn, reacts with gaseous ammonia. Emissions of ammonium chloride are of particular interest at these mixing plants because their small particle size (0.1 μm to 5 μm) dictates the use of expensive high efficiency (>99%) control equipment. In addition, these aerosols produce a very visible, dense, white plume (>70% opacity) which may exceed local state opacity regulations.[19]

Emission species from the dryer and cooler will be the same as from the ammoniator-granulator, namely ammonia, chlorine compounds, fluorine compounds, phosphorus compounds, and particulates. Dryer and cooler gas flow rates range from 280 to 560 m^3/min, with an average value of 370 m^3/min.

---

[21]National Emissions Inventory of Sources and Emissions of Phosphorus. U.S. Environmental Protection Agency. Washington. Publication No. EPA-450/3-74/013. May 1973. 54 p.

[22]Private communications. F. P. Achorn. National Fertilizer Development Center, TVA, Muscle Shoals, Alabama.

D. BULK BLENDING PLANTS

1. Process Description

Bulk blending fertilizer mixing plants produced 32% (6.50×10^6 metric tons) of the mixed fertilizers consumed in the U.S. in 1973. This type of mixing plant is much smaller, both in land area and production rate, than the ammoniation-granulation mixing plant. The annual production rates for bulk blending plants range from 450 metric tons/yr to 3,200 metric tons/yr with an average production value of 1,150 metric tons/yr. The hourly production rate varies from 4 metric tons/hr to 45 metric tons/hr, and average plant capacity is 18 metric tons/hr. Based on actual production values, bulk blending plants produce, on the average, 0.90 metric tons/hr. The peak season (75% of production) for producing bulk blended fertilizers is between January and June. The second most active production period (25% of production) is between July and November.

In 1973 there were 5,640 bulk blending plants in the U.S., representing 65.5% of all types of fertilizer mixing plants. The major concentration (57%) of the bulk blending plants is in the states of Illinois, Indiana, Iowa, Missouri, Ohio, Minnesota, and Wisconsin (Figure 12).

Bulk blending is defined as the physical mixing, without chemical reaction, of granular single nutrient and multi-nutrient materials to produce a dry fertilizer mixture.[2] A common plant layout is shown in Figure 13.[23] The basic differences between fertilizer bulk blending plants are

---

[23]Achorn, F. P., and J. C. Barber. Bulk Blender Equipment. Fertilizer Progress. 3(6), November-December 1972.

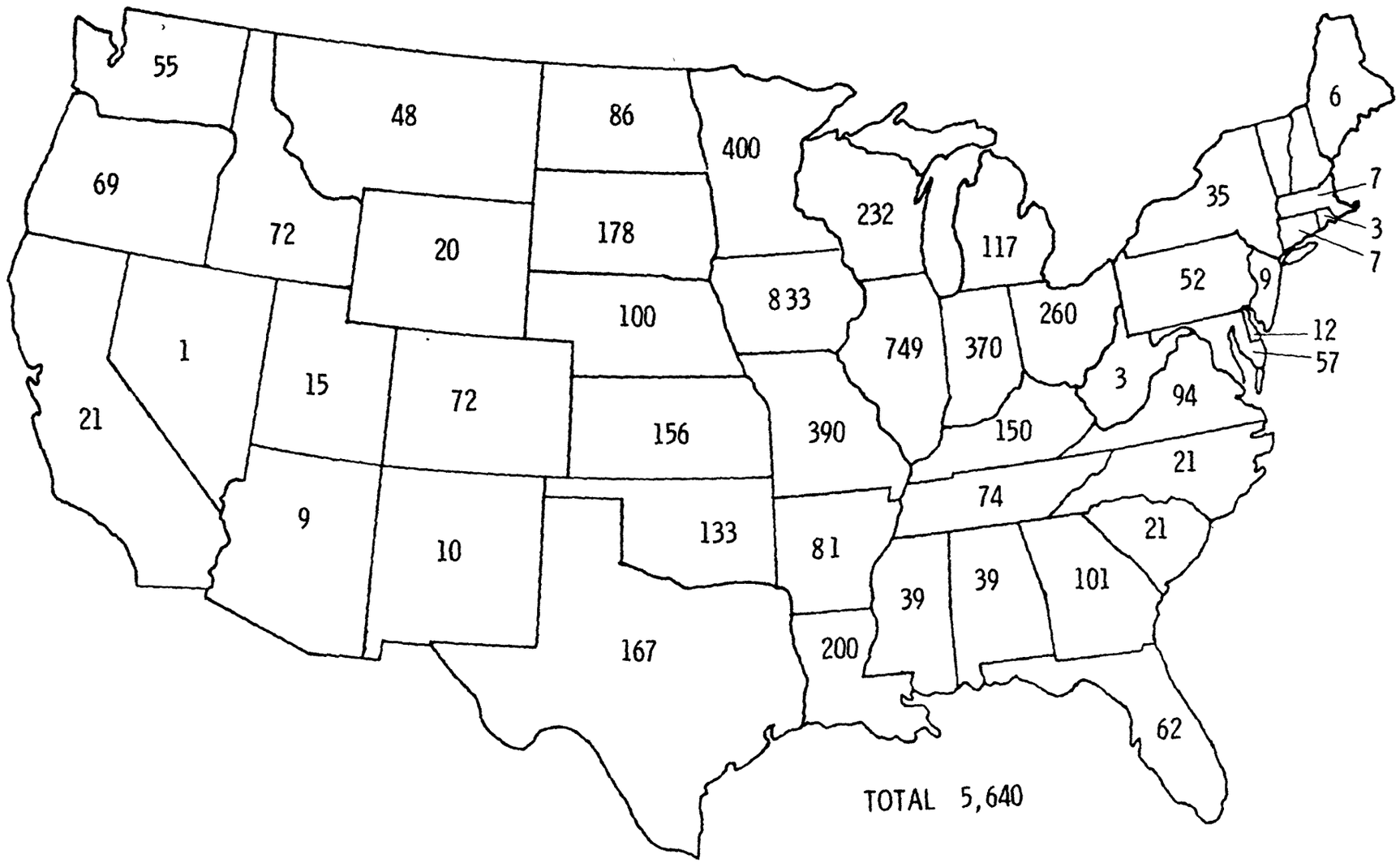

Figure 12. Geographical distribution of fertilizer bulk blending plants in 1973

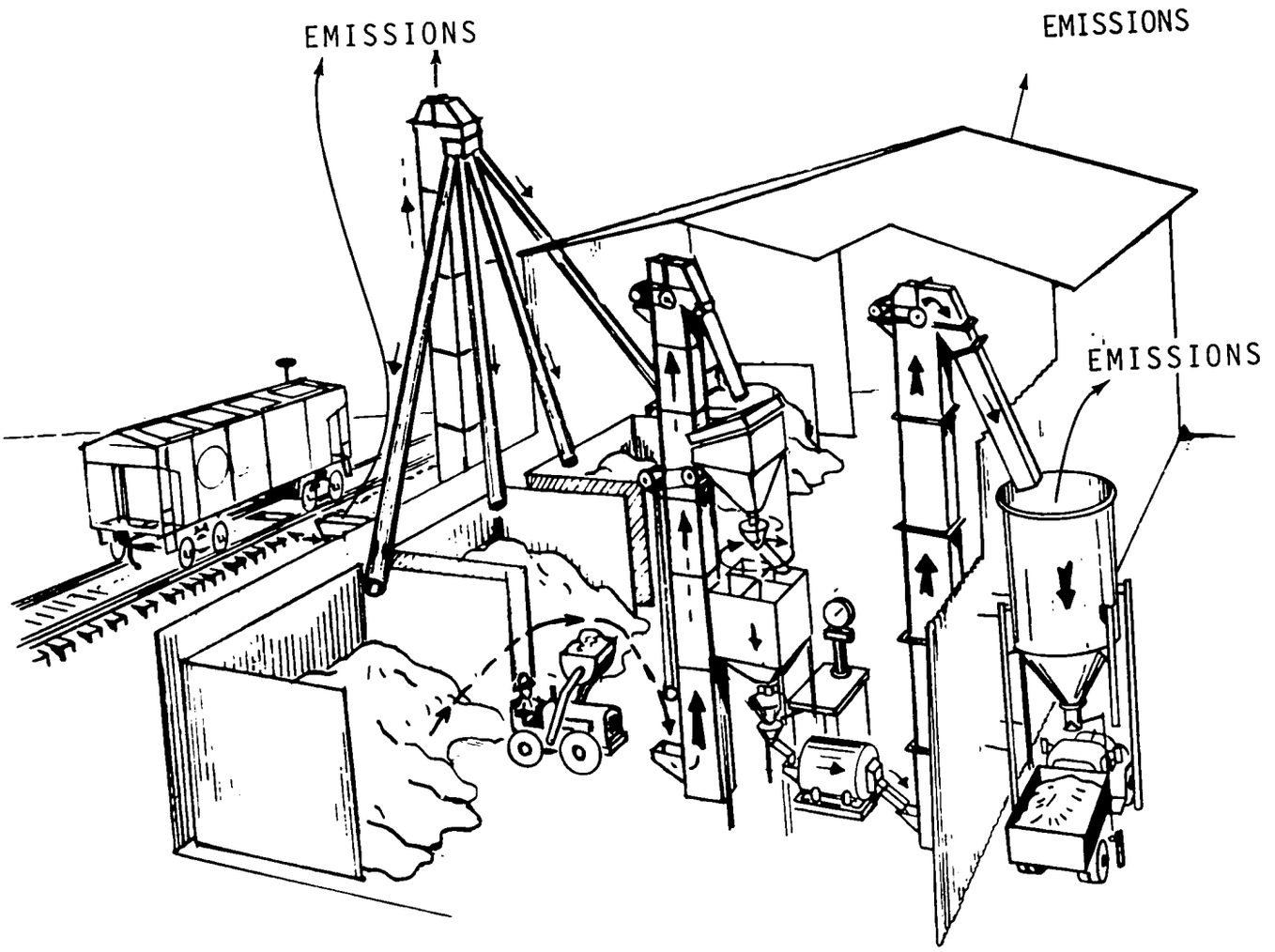

Figure 13. Bulk blending plant with a ground level rotary mixer[23]

their plant layout and type of mixer used. Conveyors transport raw materials from hopper-bottom railway cars to a distribution system.

Shuttle conveyors, bucket elevators, or pneumatic conveyor systems are used to transfer the raw material from the screw conveyor to the storage bins. The storage bins are located inside the building which houses the mixing plant. All of the mixing and bagging facilities are also located inside the building to avoid degradation of the fertilizer, raw materials, and equipment due to inclement weather. The granular raw materials are removed from bulk storage by a front-end loader or a sweep auger which dumps them into the feed hopper of a bucket elevator or directly into the mixer hopper. The bucket elevator then transfers the material to the weighing hoppers located just above the mixer.

Specific amounts of raw materials are weighed and gravity-fed into the mixer. The granular mixed fertilizer then flows by gravity to another bucket elevator which dumps it into a surge tank for storage. The mixed fertilizer is then loaded directly into a truck or bagged for shipment.

2. Types of Mixers

One major difference between bulk blending plants is the type of mixer used. There are several types of blending mixer designs.[23] Table 13 shows the results of a survey of mixer types taken in 1968, which indicated that 64% of the mixers were of the rotary-drum type.[15] Today, the trend is toward this type of mixer because of its versatility, continuous operation, and ability to produce a more uniformly mixed fertilizer.[2]

Table 13. SURVEY OF BULK BLENDING MIXER TYPES[15]

Type	Percent
Rotary drum	37
Concrete mixer	27
Volumetric	14
Screw mixer	10
Gravity mixer	8
Other	4
Total	100

The type of rotary mixer installed at bulk blending plants has an inclined axis. The typical concrete mixer used on trucks to deliver ready-mix concrete is an example of this type. The reversible drive on these mixers allows them to rotate in one direction for mixing and in the opposite direction for discharging. The feeding and discharging mechanism is the basic difference between the concrete mixer design and the rotary-drum mixer. The dry materials are fed into the rotary-drum mixer from one end and the mixed product is discharged from the other end. During the mixing process the ends are closed. About two-thirds of the mixers used by bulk blenders are of these two types.

Rotary-drum mixers are easily modified to include a sprayer system to spray binding agents, such as oil and liquid fertilizer (diammonium phosphate:10-34-0), on the fertilizer in order to reduce the dustiness of the granular fertilizer (thus reducing fugitive dust emissions [Figure 14]).[24,25]

[24]Achorn, F. P., and H. L. Balay. Plant Experiences in Adding Pesticides, Micro and Secondary Nutrients to Bulk Blends. In: TVA Fertilizer Conference. Tennessee Valley Authority. Muscle Shoals, Alabama. Bulletin Y-62. August 1973. p. 70-79.

[25]Achorn, F. P., and W. C. Brummitt. Different Methods of Adding Pesticides to Bulk Blends. Fertilizer Progress. 4:9-10, March-April 1973.

The same system can also be used to apply secondary and micronutrient materials. To date, there are no estimates as to how many rotary-drum mixers are equipped with sprayer systems.

The screw or ribbon type mixer blends the materials by the action of a rotating shaft. The mixing materials are dropped into the mixer from the top, mixed, then discharged from the bottom.

3. Raw Materials

Bulk blended fertilizers are produced from single and multi-nutrient dry, granular raw materials. Examples of single nutrient materials include normal and triple superphosphate, ammonium sulfate, urea, and potash. Examples of multi-nutrient materials include mono- and diammonium phosphate and potassium nitrate. Appendix A lists the raw materials (and their particle size distributions) consumed by bulk blending plants in 1972. Due to the nature of the materials flow reporting system in the fertilizer industry, it is not possible to determine the quantities of raw materials consumed at these plants.

Bulk blending plants account for 25% of the herbicides applied to mixed fertilizers. Estimates of the maximum quantities used are shown in Table 14 and are based on 25% of the values shown in Table 10. Approximately 30% (1,692 plants) of the bulk blending plants mix these herbicides with the fertilizers.[3]

4. Emission Sources

All of the emissions from bulk blending plants are in the form of particulates because these plants mix only dry,

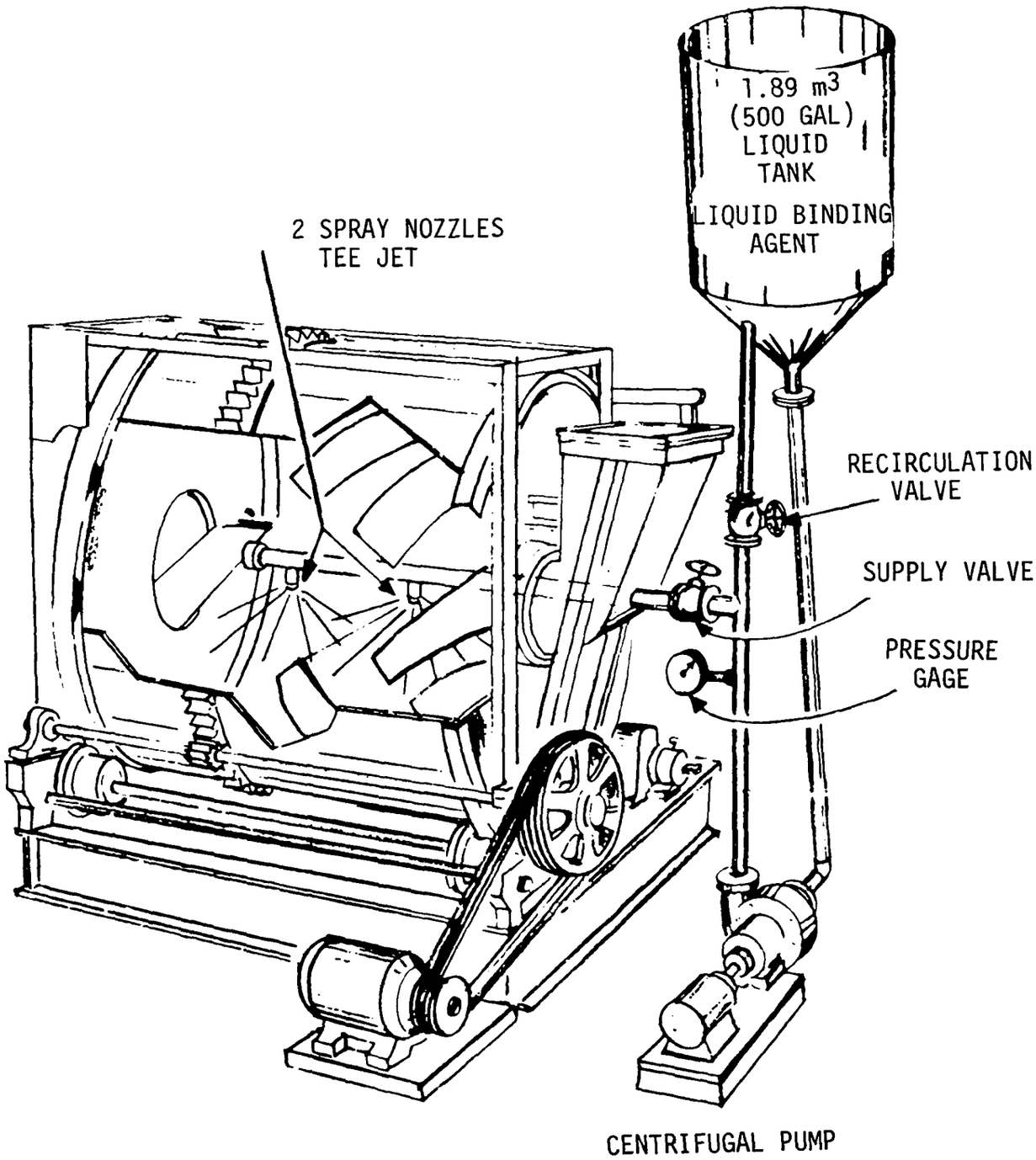

Figure 14. Spray system for coating granules in rotary mixer[26]

[26]Achorn, F. P., and H. L. Balay. Systems for Controlling Dust in Fertilizer Plants. In: TVA Fertilizer Conference. Tennessee Valley Authority. Muscle Shoals, Alabama. Bulletin Y-78. August 1974. p. 55-62.

Table 14. ESTIMATED QUANTITIES OF SELECTED HERBICIDES (ACTIVE INGREDIENTS) USED BY BULK BLEND PLANTS, 1971

Type of herbicide	Quantity used, metric tons/yr
Inorganic herbicides	50
Organic herbicides:	
Arsenicals	230
Phenoxys:	
2,4-D	980
2,4,5-T	40
MCPA	100
Other phenoxy	20
Total	1,140
Phenyl urea:	
Diuron	40
Linuron	50
Fluometuron	100
Other phenyl urea	10
Total	200
Amides:	
Propachlor	700
Propanil	200
Alanap	100
Alachlor	430
Other amides	20
Total	1,450
Carbamates:	
EPTC	130
Pebulate	30
Vernolate	110
Butylate	170
Other carbamates	100
Total	540
Dinitro Group	210
Triazines:	
Atrazine	1,700
Propazine	100
Simazine	50
Other triazines	40
Total	1,880
Benzoics:	
Amiben	280
Dicamba	10
Other benzoics	10
Total	300
Other organics:	
Trifluralin	340
Nitralin	80
Dalapon	30
Norea	40
Fluorodifen	40
Others	140
Total	670
Total organic herbicides (excluding petroleum)	6,600
Total herbicides (excluding petroleum)	6,650
Petroleum	4,200
Total herbicides	10,900

granular material at ambient temperatures to produce a mixed fertilizer. The composition of these particulates depends on the raw materials used. Three process steps are sources of emissions to the atmosphere at these plants:

- Material storage and handling
- Loading operations
- Fugitive building emissions

Material transfer systems responsible for particulate emissions are screw conveyors, front-end loaders, bucket elevators, rotary distributors which fill the weighing hoppers, conveyor belts, and pneumatic transfer systems. When pneumatic transfer systems are used, the cyclone collectors that separate the air from the material are another source of emissions. Experts at the fertilizer division of TVA state that very few (less than 1% of the plants, as an upper limit) bulk blending plants use pneumatic material transfer systems.[9,22] In fact, these experts state that the majority (greater than 90%) of the bulk blending plants have not been required to install pollution control equipment because their emissions have been below local state emission standards.

Loading bulk fertilizer into open trucks is the major contributor (75.0%) to atmospheric emissions at bulk blending plants. The majority (>50%) of the bulk blending plants use a hopper-type loading station similar to the one in Figure 15.

Fugitive dust emissions issuing from the doors and windows are a result of mixing and material transfer operations within the building. Bagging machines within the building also create dust emissions which escape into the ambient air outside the building. Emissions as great as 9 g of dust

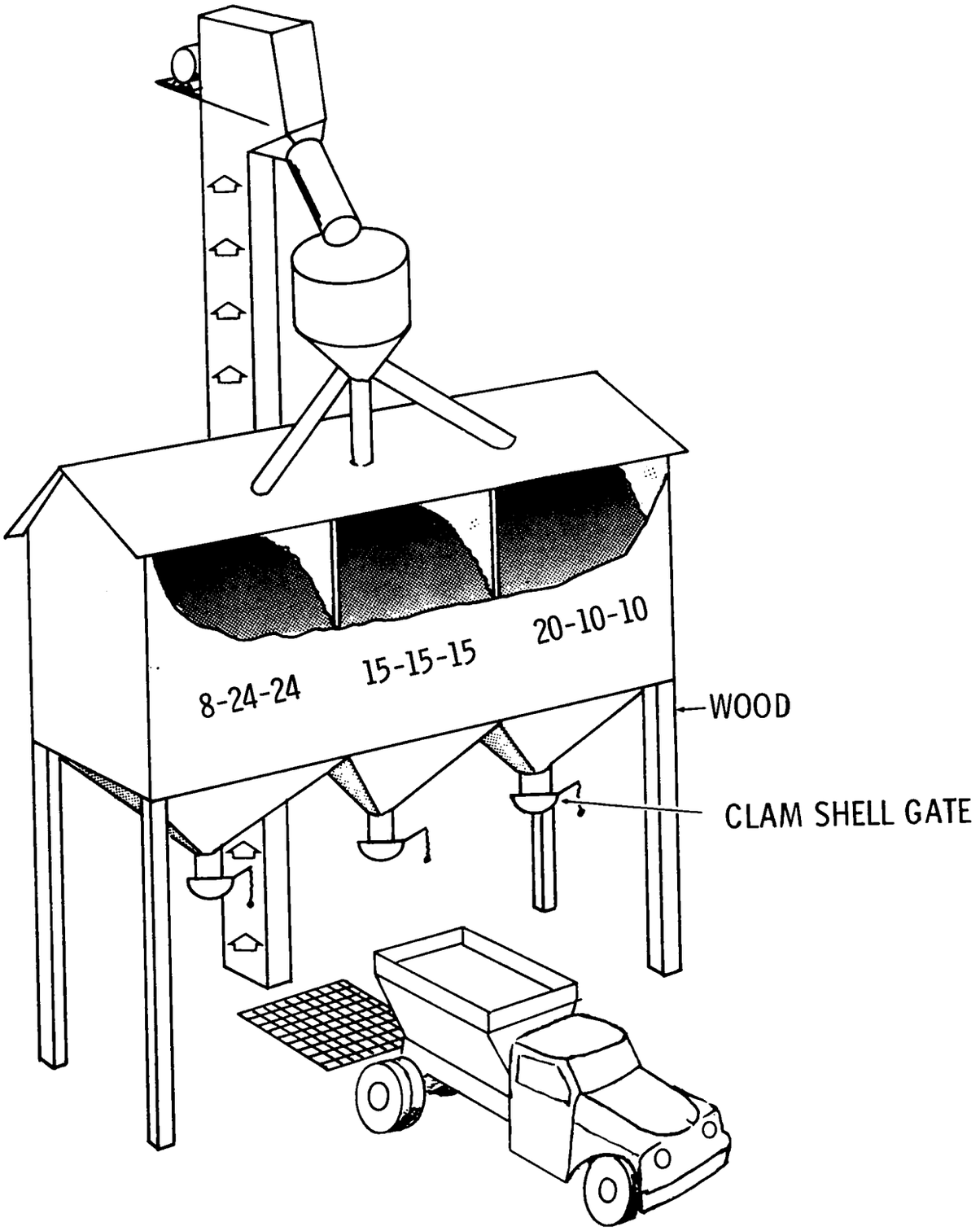

Figure 15. Bulk loading station with elevated storage used in bulk blending

per kg of fertilizer bagged have been reported in bagging room atmospheres.[27]

E. LIQUID MIX PLANTS

1. Process Description

In 1973 liquid mixing fertilizer plants produced 23% (4.67 x 10^6 metric tons) of the mixed fertilizers consumed in the U.S. These plants have an annual production rate ranging from 450 metric tons/yr to 2,300 metric tons/yr, with an average production value of 1,690 metric tons/yr.

There were 2,768 liquid mixing plants in the U.S. in 1973, which represents 32.2% of all types of mixing plants. The geographical distribution of liquid mixing plants is shown in Figure 16. The majority (55%) of these plants are located in the states of Illinois, Indiana, Iowa, Missouri, Kansas, and Texas.

Liquid mixed fertilizers could well be called ammonium phosphate solutions since ammonium phosphate is the only soluble phosphate generally available and suitable for supplying the phosphate requirements.[28] When the N/P_2O_5 ratio needed is higher than that supplied by ammonium phosphate, urea-ammonium nitrate solutions are added to supply the supplemental nitrogen.[29] The ammonium phosphate

---

[27]Barber, J. C. Environmental Control in Bulk Blending Plants. 1. Control of Air Emissions. In: TVA Fertilizer Conference. Tennessee Valley Authority. Muscle Shoals, Alabama. Bulletin Y-62. August 1973. p. 39-46.

[28]Liquid Fertilizer Manual. Peoria, Illinois. National Fertilizer Solutions Association. 1967. 270 p.

[29]Achorn, F. P., and J. S. Lewis, Jr. Alternative Sources of Materials for the Fluid Fertilizer Industry. Fertilizer Solutions Magazine. 18(4):8-13, July-August 1974.

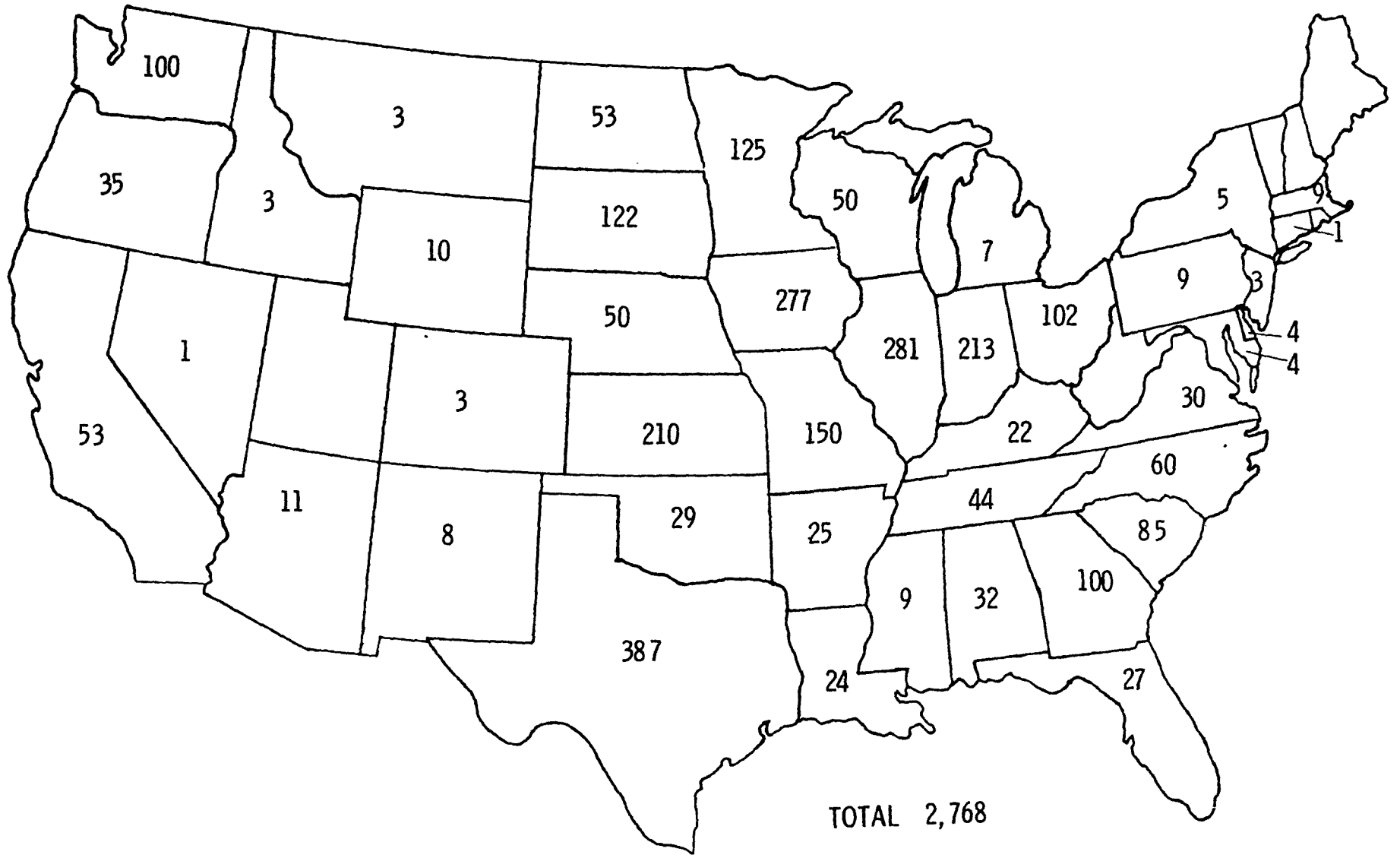

Figure 16. Geographical distribution of liquid mix fertilizer plants in 1972

solution is called a "base" solution and serves much the same purpose as does diammonium phosphate or triple superphosphate in bulk blending of granular fertilizers. Production of the ammonium phosphate base solution, whether or not other raw materials are added at that time, is called "hot mixing" because the reaction between ammonia and phosphoric acid during formulation is exothermic. When the ammonium phosphate solution is shipped as a base solution, the final mixing process is called "cold mixing."

Figure 17 is a generalized process flow diagram for the production of liquid mixed fertilizers. In addition, a diagram of the various methods used for producing liquid mixed fertilizers is shown in Figure 18.

Liquid mix plants produce two types of fertilizers: clear liquids (approximately 75%) and suspensions or slurry mixtures (approximately 25%). Clear liquid fertilizers contain less than 0.5% solids by weight and have low salting-out temperatures. They are easy to store, but usually have a lower nutrient content than do granular mixtures.

The terms "suspension" and "slurry" fertilizer are often used interchangeably to designate all fluid fertilizers that contain solids. Suspension fertilizers are fluid mixtures of solid and liquid materials in which the solids do not settle rapidly and can be redispersed readily with agitation to give a uniform mixture.[28] Attapulgite and bentonite types of clay are added as suspending agents. The suspension is fluid enough to be pumped and applied to the soil in application equipment commonly available for clear mixed liquid fertilizers.

Slurry fertilizers are fluid mixtures of solid and liquid materials in which the solids settle rapidly in the absence

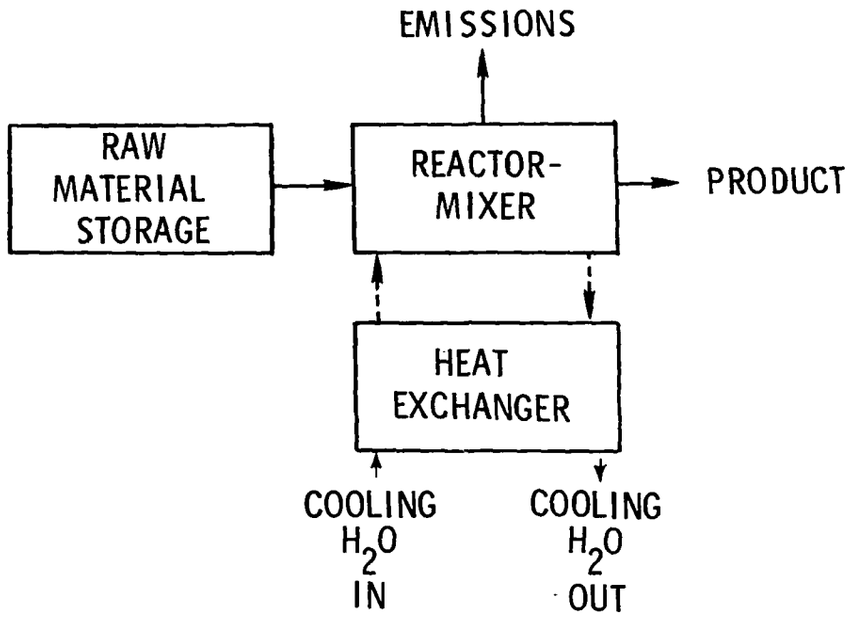

Figure 17. Generalized flow diagram of the production of liquid mixed fertilizers

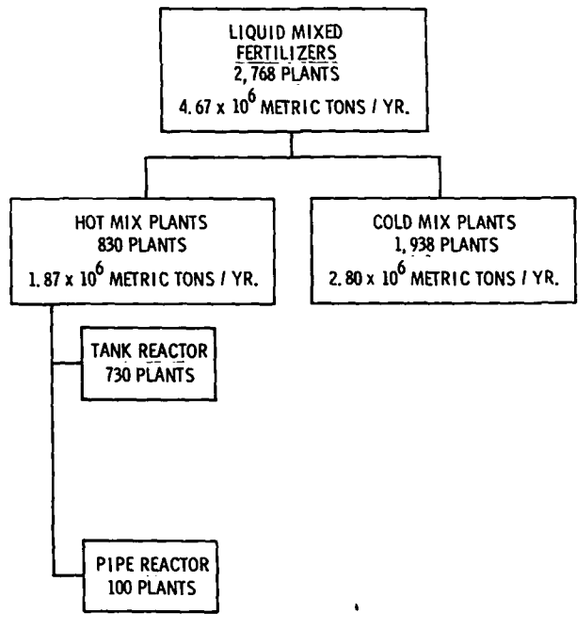

Figure 18. Types of liquid mixed fertilizer plants[3,30]

[30]Private communications. D. K. Murry. National Fertilizer Solutions Association, Peoria, Illinois.

of agitation to form a firm layer which is difficult to resuspend. Continuous agitation is required to ensure a uniform mixture that can be pumped and applied to the soil. Commonly available application equipment usually needs modification to handle this type of product successfully because of its higher viscosity.

2. Hot Mix Plants

Hot mix manufacture involves neutralization of wet-process phosphoric acid to give 8-24-0 ammonium phosphate solution, or of superphosphoric acid to give 10-34-0 or 11-37-0 ammonium polyphosphate solutions, followed by addition of nutrients such as urea-ammonium nitrate, ammonium nitrate, and potash.[28] Water is added with these materials to control the reaction, pH, and specific gravity of the solution. Potash not only supplies the potassium nutrient but also lowers the heat of reaction because the reactions with potash are endothermic. In the ammoniation reaction it is important to minimize contact between the superphosphoric acid and water, to avoid rapid hydrolysis of the polyphosphates. Therefore, the acid, ammonia, and water are added simultaneously and the points of acid and water injection are located at opposite ends of the reactor (Figure 19). Under these conditions, the acid is neutralized before it has time to hydrolyze.

The temperature in the reactor depends on the strength and concentration of phosphoric acid used, the amount of ammonia added, whether potash is added, and the ambient temperature of the raw materials. The reaction with potash is endothermic and acts to cool the solution. On the average, the temperatures in the hot mix reactor range from 27°C to 77°C. External heat exchangers are used to control the reactor temperatures and cool the product when necessary.

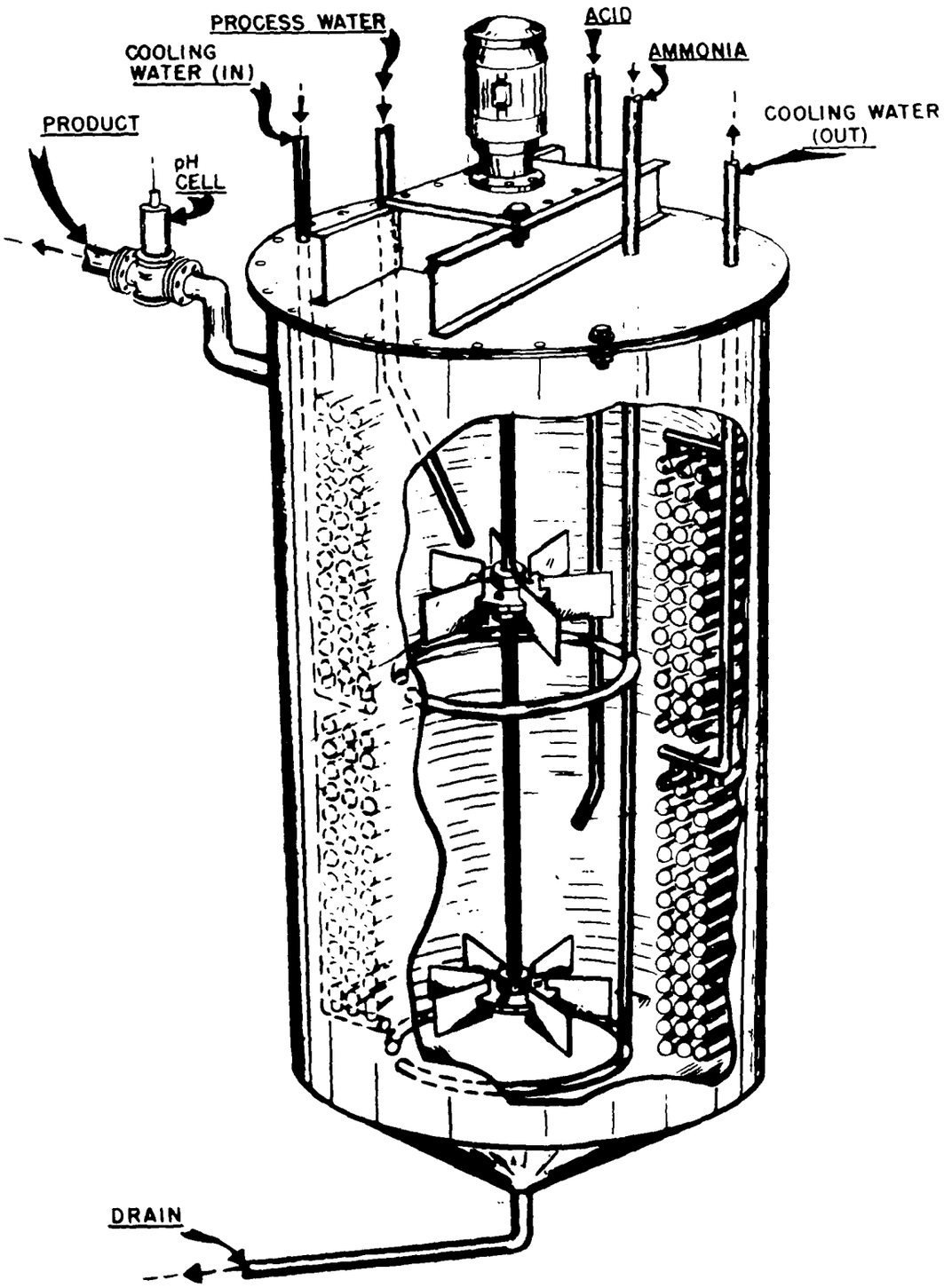

Figure 19. Reactor assembly for the production of liquid fertilizer

Hot mix plants produce both types of liquid mixed fertilizers: clear liquids and suspensions. Clear liquids are produced by adding water, phosphoric acid, ammonia, urea-ammonium nitrate, and potash to the reactor-mix tank in that order. To produce suspension mixtures, the clays are added to the tank last (Figure 20).

There are two types of hot mix plants, specified according to reactor type: (1) tank reactor, and (2) pipe reactor. The majority (88%) of the hot mix plants use the tank reactor design.[31] The production of clear liquid mixed fertilizers by the hot mix tank reactor can be done either on a continuous basis or by batch operations. Figure 21 illustrates one design of a continuous process hot mix plant for producing clear liquid fertilizer. The batch-type plant process is used in approximately 90% of the hot mix plants and is capable of producing both clear liquids and suspension fertilizers (Figure 22). For suspension mixtures, the attapulgite clay is added along with the potash.

In early 1970, the TVA helped to develop a pipe reactor hot mix fertilizer plant that can produce a high analysis polyphosphate fertilizer. Pipe reactor plants differ from tank reactor plants in reactor design and the location where the water is added. Instead of adding all the fertilizer ingredients to a tank, as in the tank reactor design, the phosphoric acid and ammonia are combined in a water-jacketed pipe prior to being mixed with the remaining ingredients.[32]

---

[31] Meline, R. S. Use of a Pipe Reactor in Production of Liquid Fertilizer of High Polyphosphate Content. Summary Report. National Fertilizer Development Center, TVA. Muscle Shoals, Alabama. November 1974. p. 9-11.

[32] Achorn, F. P., and H. L. Kimbrough. Latest Developments in Commercial Use of the Pipe Reactor Porcess. Fertilizer Solutions Magazine. 17(4), July-August 1974.

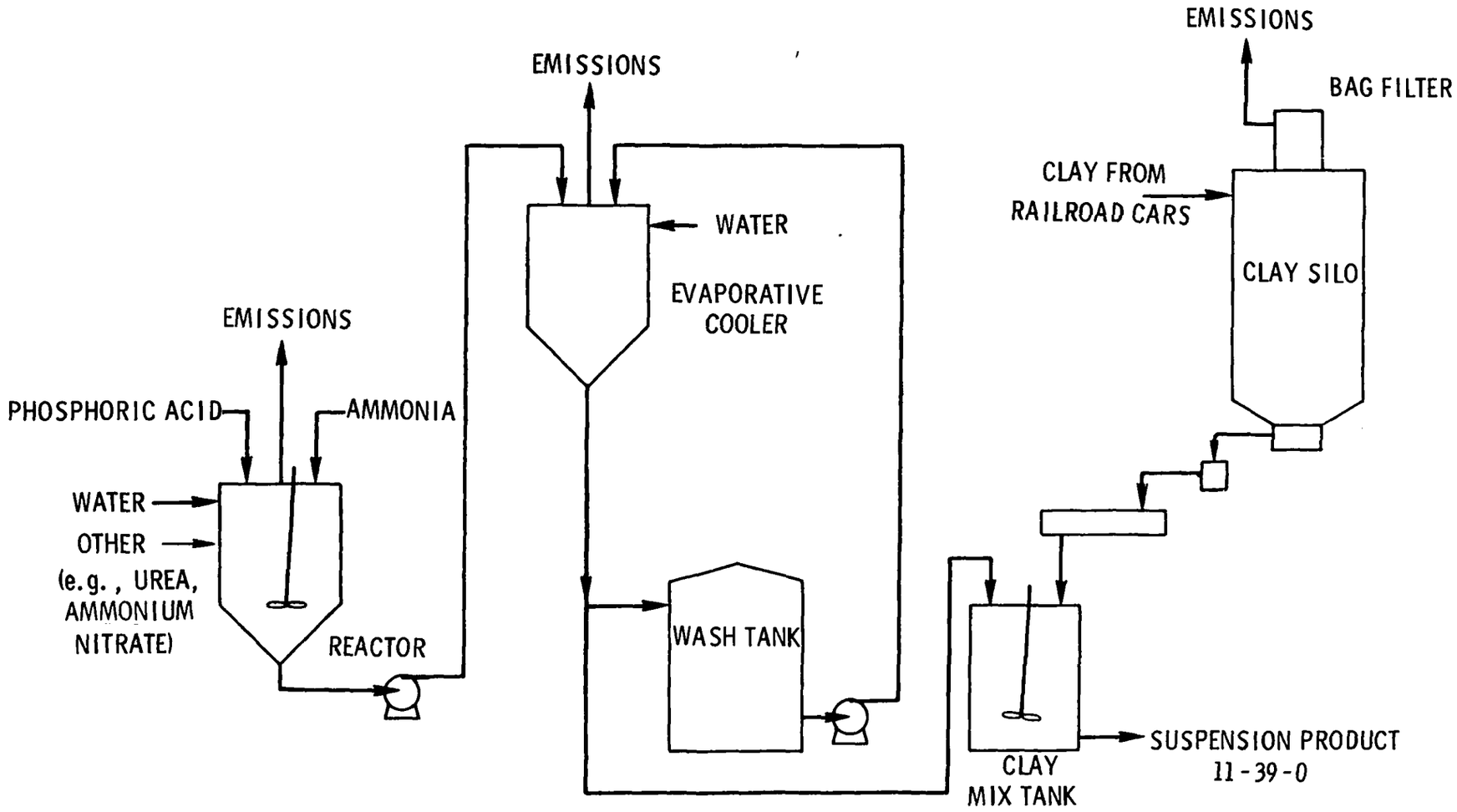

Figure 20. TVA liquid fertilizer suspension mix plant (11-39-0)

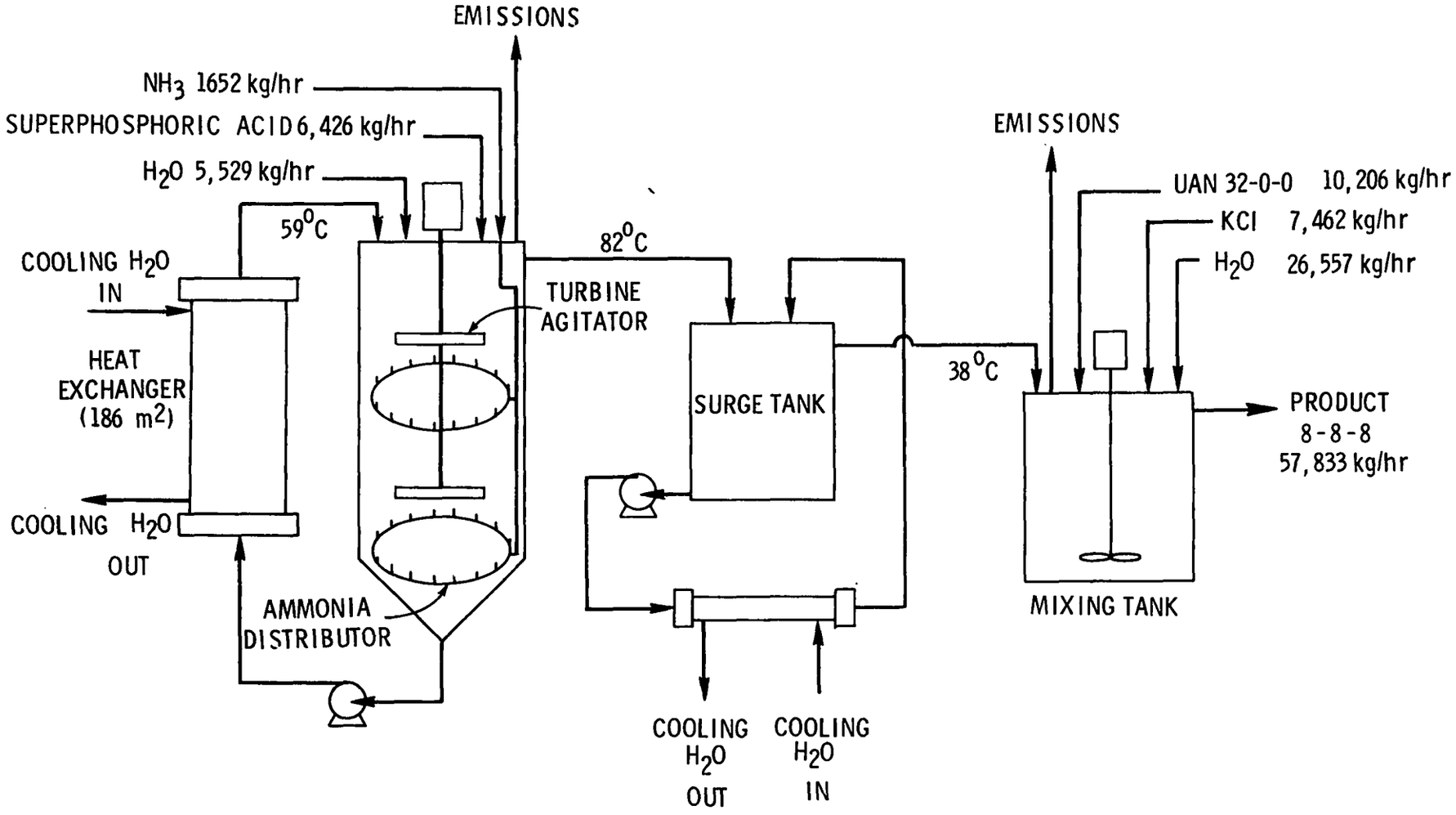

Figure 21. Hot mix plant for the continuous production of clear liquid fertilizers (57.8 metric tons/hr of 8-8-8) [28]

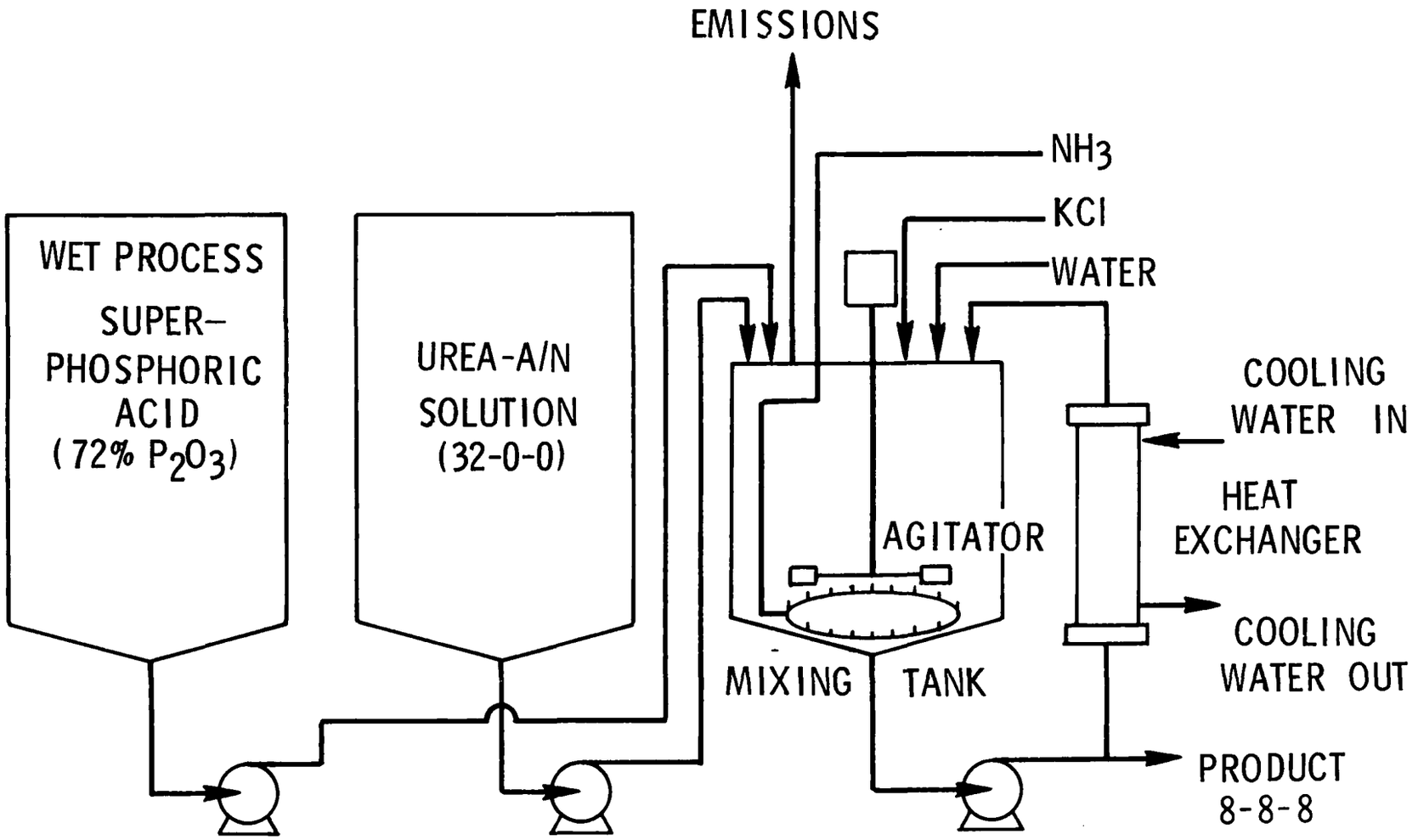

Figure 22. Hot mix plant for the batch production of clear liquid fertilizers[28]

Figure 23 illustrates the pipe reactor plant design equipped with a separate mix tank. The solution and the hot water from the pipe reactor jacket are added to a mix tank. Other ingredients such as water, urea-ammonium nitrate and potash are then added to the mix tank. There are approximately 100 pipe reactor plants of which about 25 use the separate mix tank design.

Approximately 75 pipe reactor plants combine the mix tank, cooler, and scrubber into one unit.[33] This type of pipe reactor plant is referred to as the tower design (Figure 24). Hot solution is injected below the fluid level in the solution well. Cooling is accomplished by recirculating liquid from the hot well to the top of the packed bed section where it is sprayed down through the packing material. Secondary cooling air enters through a gap in the upper walls. Adjustable plates in this opening control the volume and velocity of air passing through the packed bed. A demister is installed above the cooler-scrubber section.[34-36]

---

[33]Killough, B. Liquid Mixing Seminar Is Success. Fertilizer Solutions Magazine. 18(5), September-October 1974.

[34]Achorn, F. P., H. L. Balay, and H. L. Kimbrough. Commercial Uses of the Pipe Reactor Process for Production of High-Polyphosphate Liquids. Fertilizer Solutions Magazine. 17(2), March-April 1973.

[35]Meline, R. S., R. G. Lee, and W. C. Scott. Use of a Pipe Reactor in Production of Liquid Fertilizers with Very High Polyphosphate Content. Fertilizer Solutions Magazine. 16(2), March-April 1972.

[36]Achorn, F. P., and J. I. Bucy. High-Analysis 12-44-0 Produced by Kugler Oil. Fertilizer Solutions Magazine. 16(5), September-October 1972.

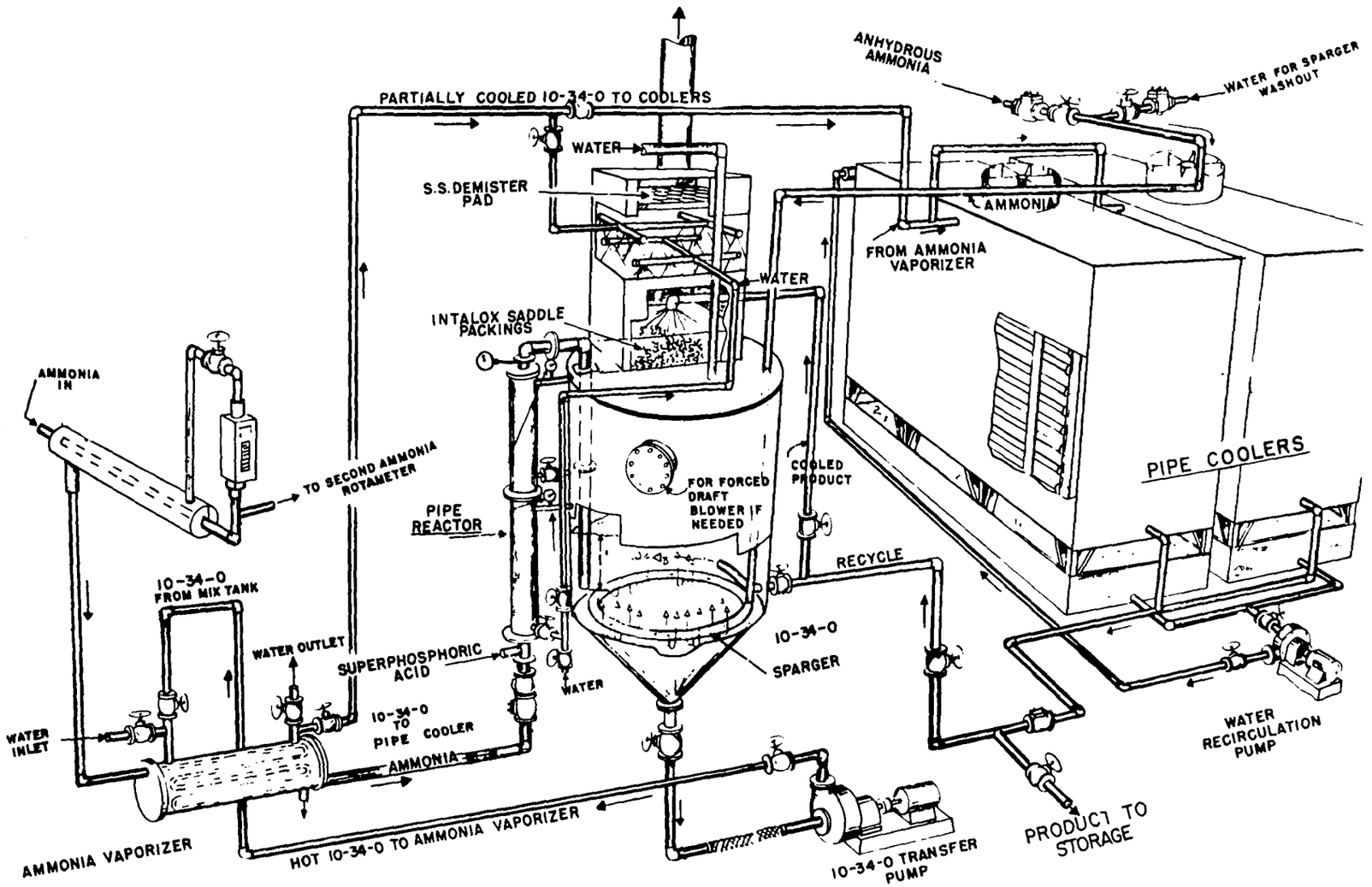

Figure 23. Plant using pipe reactor process, with wet scrubber separate mix tank and pipe-type coolers[32]

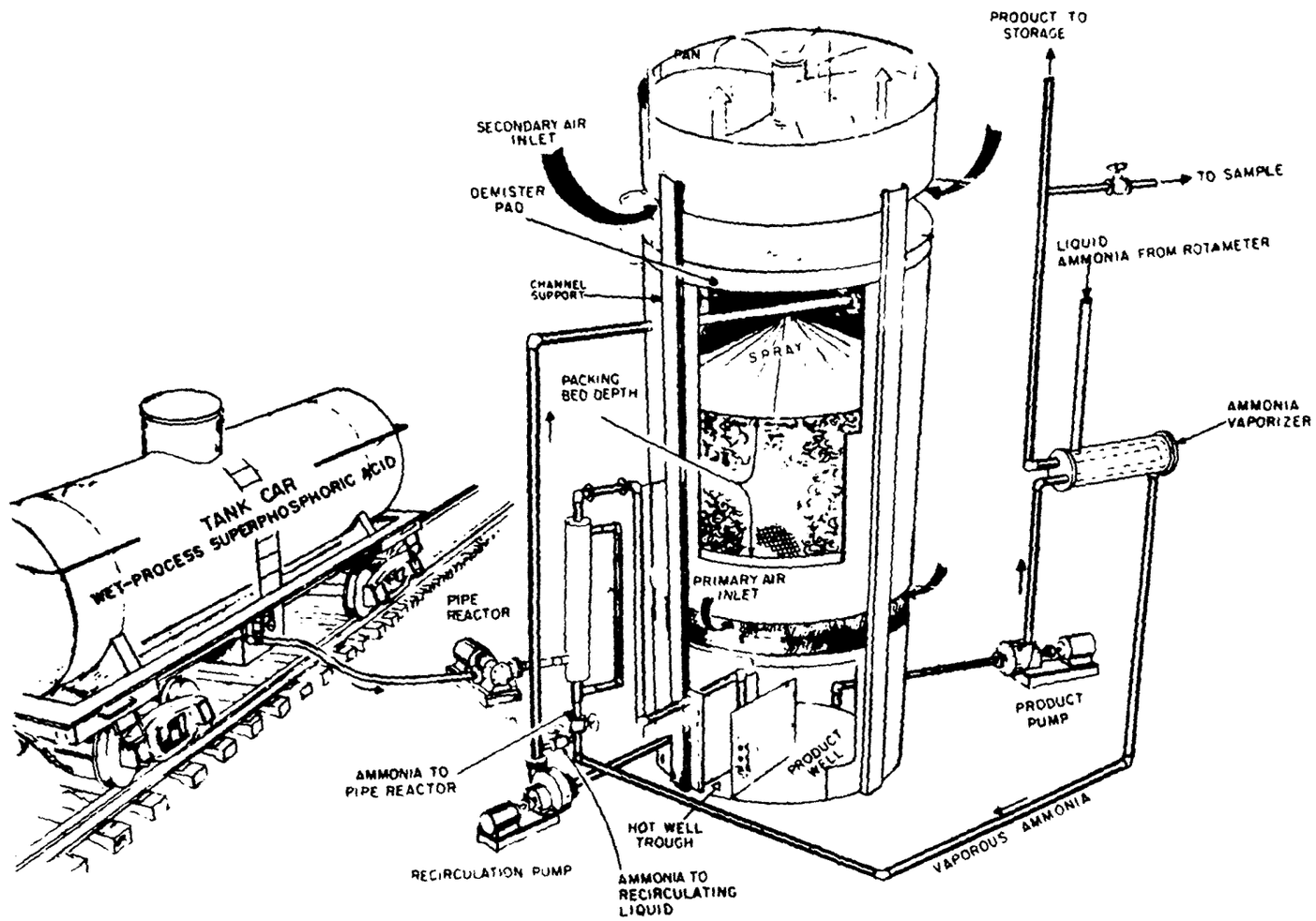

Figure 24. Plant using pipe reactor process with tower design[32]

3. Cold Mix Plants

A cold mix plant is one in which ammoniated phosphoric acid, such as grades 8-24-0, 10-34-0, or 11-37-0, is blended with other raw materials, such as urea-ammonium nitrate, potash, clay and water, at ambient temperatures less than 38°C. These plants operate on a batch-type basis. A cold-mixed clear liquid fertilizer station frequently has three tanks for storage of 10-34-0, 4-10-10, and urea-ammonium nitrate (32-0-0).[37] These solutions are pumped from plastic lined, mild steel tanks through a volumetric meter. Mixing is accomplished as the liquids are pumped into a mixing tank (Figure 25). The mixing tank is open at the top and has a rotating vane mixer inside for agitation. All of the mixing equipment is located inside an enclosed building.[38]

4. Raw Materials

The conventional materials used by fluid fertilizer manufacturers are urea-ammonium nitrate solutions (32-0-0, 30-0-0, and 28-0-0), 10-34-0 or 11-37-0 solutions, superphosphoric acid, potash, and ammonia. All of these materials, except potash, are currently in very short supply. Other phosphatic and nitrogeneous materials that are in short supply, but more readily available, include wet-process orthophosphoric acid, diammonium phosphate, monoammonium phosphate, prilled urea, prilled ammonium nitrate, and ammonium sulfate. Additional materials used to produce suspended liquid mixed fertilizers

---

[37] Achorn, F. P., and H. L. Balay. Fluid Fertilizer Mixtures - 1972. In: Phosphorus and Agriculture. International Superphosphate and Compound Manufacturers' Assoc., Ltd., London. Publication No. 60. December 1972. p. 27-36.

[38] Tinsman, W. S. Mixing Techniques - Part 2 - Cold Mix and Satellites. Fertilizer Solutions Magazine. 17(3), May-June 1973.

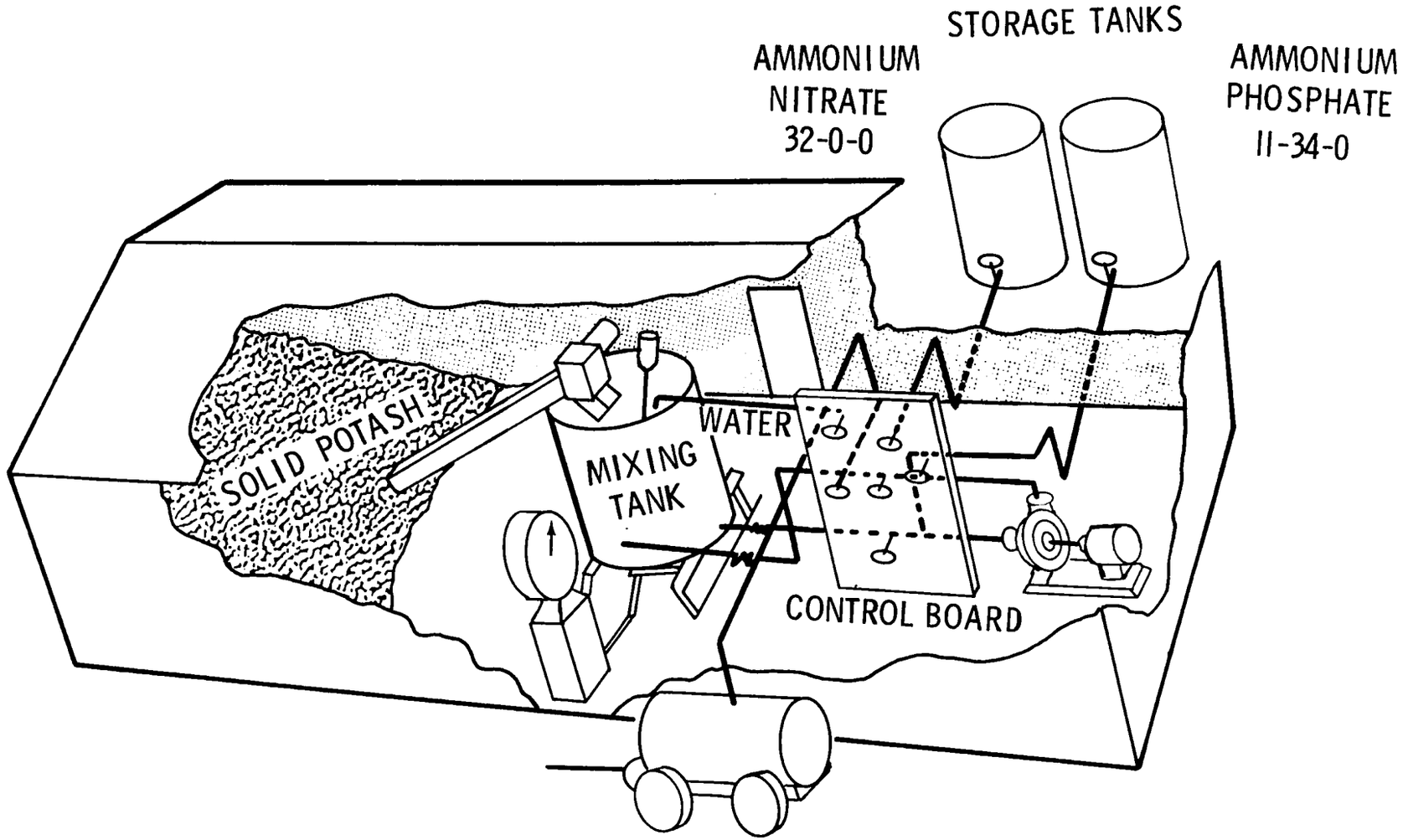

Figure 25. Diagram of a liquid cold mix plant

include 12-40-0 and attapulgite-type clay. Table 15 lists the raw materials consumed by liquid mixing plants.

Table 15. RAW MATERIALS CONSUMED BY LIQUID MIX FERTILIZER PLANTS

Material	Used at	
	Hot mix plants	Cold mix plants
Ammonia, anhydrous	X	
Ammonium nitrate (33.5-0-0)	X	X
Ammonium sulfate (21-0-0)	X	X
Urea, prilled (45-0-0)	X	X
Urea-ammonium nitrate (28-0-0, 30-0-0, 32-0-0)	X	X
Phosphoric acid	X	
Monoammonium phosphate (11-48-0, 13-52-0, 11-55-0, 16-20-0)	X	X
Ammonium polyphosphate (10-34-0, 11-37-0)	X	X
Diammonium phosphate (16-48-0, 18-46-0)	X	X
Potash	X	X
Attapulgite clay	X	X

Minor nutrients such as calcium, magnesium, sulfur, iron, and zinc are added to the mixed fertilizers. The general insolubility of metal cations in orthophosphate solutions makes it difficult to supply these additional nutrients to liquid mixed fertilizers. In general, the amount of metal cations sequestered is proportional to the amount of polyphosphate present.[39] The metal cations are more insoluble

[39]Forbes, M. R. Mixing Techniques of Micronutrient with Liquid and Suspensions. Fertilizer Solutions Magazine. 17(5), September-October 1973.

in orthophosphates than in polyphosphates. The types of micronutrients applicable to liquid mixed fertilizers are shown in Tables 8 and 9.

The largest portion (75%) of the herbicides added to mixed fertilizers are added to liquid fertilizer mixtures. The estimated maximum quantities of herbicides added to these fertilizers are shown in Table 16. Estimates are based on 75% of the values shown in Table 10.

5. Emission Sources

a. Hot Mix Plants - There are two sources of emissions at hot mix liquid fertilizer plants: (1) hot mix reactor, and (2) raw materials handling. Emissions from the hot mix reactor are: (1) ammonia, (2) fluorine compounds, (3) phosphorus compounds, and (4) particulate matter. The chemical natures of these emissions are the same as those described for emissions from ammoniation-granulation plants. Particulate emissions from raw materials handling consist of potash and clays.

b. Cold Mix Plants - The only source of emissions from cold mix plants is wind erosion from the potash storage pile when it is located outside of the building (<20% of the plants). In addition, ammonia may be volatilized from spills resulting from the filling of the ammonium phosphate or ammonium nitrate storage tanks.

Table 16. ESTIMATED QUANTITIES OF SELECTED HERBICIDES (ACTIVE INGREDIENTS) USED BY LIQUID MIX PLANTS, 1971

Type of herbicide	Quantity used, metric tons/yr
Inorganic herbicides	150
Organic herbicides:	
Arsenicals	700
Phenoxys:	
2,4-D	2,900
2,4,5-T	120
MCPA	300
Other phenoxy	50
Total	3,400
Phenyl urea:	
Diuron	100
Linuron	160
Fluometuron	300
Other phenyl urea	20
Total	580
Amides:	
Propachlor	2,100
Propanil	590
Alanap	300
Alachlor	1,300
Other amides	70
Total	4,400
Carbamates:	
EPTC	390
Pebulate	90
Vernolate	330
Butylate	520
Other carbamates	280
Total	1,620
Dinitro group	640
Triazines:	
Atrazine	5,100
Propazine	280
Simazine	150
Other triazines	130
Total	5,600
Benzoics:	
Amiben	840
Dicamba	40
Other benzoics	10
Total	900
Other organics:	
Trifluralin	1,000
Nitralin	240
Dalapon	90
Norea	120
Fluorodifen	120
Others	420
Total	2,000
Total organic herbicides (excluding petroleum)	19,800
Total herbicides (excluding petroleum)	19,960
Petroleum	12,630
Total herbicides	32,590

SECTION IV

EMISSIONS

The production of mixed fertilizers gives rise to several air emission species, namely:

- Gaseous ammonia and chlorine
- Aerosols of sulfates, phosphates, fluorides, chlorides, and ammonium chloride
- Particulates
- Pesticides

Of this list, only particulate emissions are classified as a criteria pollutant by the EPA.

The quantities and species of emissions generated depend on the type of mixing plant and the nature of the source of emissions within the plant. All of the above species, except sulfates, are emitted by liquid mix plants and all of them, except the pesticides, are emitted at ammoniation-granulation plants. Emissions from bulk blending plants consist only of particulates and pesticides. The emission factors (the quantity of species emitted per unit weight of fertilizer product) and characteristics of these emission species are evaluated as functions of operating techniques and emission sources in the following sections.

A. AMMONIATION-GRANULATION PLANTS

1. Selected Emissions

Five plant operations are sources of emissions at ammoniation-granulation plants. They are described in detail in Section III. The sources and the emission species associated with each are as follows:

- Materials storage and handling: particulates (solid raw materials and product)
- Ammoniator-granulator: ammonia, chloride compounds, fluoride compounds, phosphate compounds, sulfate compounds, and particulates
- Dryer and cooler: ammonia, chloride compounds, fluoride compounds, phosphate compounds, and particulates
- Screen and oversize mill: particulates
- Bagging and loading: particulates

Particulate emissions from materials storage and handling, screen and oversize mill, and bagging and loading operations are composed of raw material and finished product particles. Ammonia related emissions from the ammoniator-granulator and the dryer and cooler consist of NH_3 vapor and aerosols of NH_4Cl, $(NH_4)_2HPO_4$, and $(NH_4)_2SO_4$. The NH_3 vapor emissions are a result of incomplete ammoniation reactions in the ammoniatior-granulator. The aerosols are produced when ammonia reacts with the chloride, phosphates, and sulfates which are produced at the elevated temperatures (82°C) from the potash, urea, and phosphates.

Chloride related emissions, due to the addition of potash (KCl), include chlorine vapor and inorganic chloride salts such as NH_4Cl and KCl. Fluoride emissions are a result of trace quantities (1% to 2%) of inorganic fluoride salts in

the raw phosphoric acid and normal and triple superphosphoric acid. Emissions of fluorine are in the form of SiF_4, HF, and CaF_2.[20]

Incomplete ammoniation reactions generate free phosphate radicals which combine with elements such as calcium, magnesium, and potassium to produce phosphate aerosol emissions. These aerosols consist of $Ca_3(PO_4)_2$, $(NH_4)_2PO_4$, H_3PO_4, and K_2HPO_3.[21] All sulfur emissions are in the form of inorganic sulfate salts such as $(NH_4)_2SO_4$, $CaSO_4$ and K_2SO_4, and H_2SO_4. However, due to the completeness of the ammoniation reaction with H_2SO_4,[9,18] these emissions are low (<1% of total) and will therefore be included with particulate emissions.

Ammonium chloride aerosols are formed in the ammoniator-granulator when sulfuric acid reacts with potassium chloride (potash) to form hydrogen chloride which, in turn, reacts with gaseous ammonia. Emissions of ammonium chloride are of particular interest at these mixing plants because their small particle size (0.1 μm to 5 μm) dictates the use of expensive, high efficiency (>99%) control equipment. In addition, these aerosols produce a very visible, dense, white plume (>70% opacity) which may exceed local state opacity regulations.[19]

To calculate emission factors, source test data from ammoniation-granulation plants were collected from published literature and sampling data on file at EPA. The raw data which were compiled and used to establish emission factors are given in Appendix B. All of the emission factors in Table B-1, Appendix B, are normalized to uncontrolled emissions because the type and collection efficiency of the control equipment used varied from plant to plant. The collection efficiency of the wet scrubbers used at these

plants ranges from 85% to 99.5%. When controlled emission factors are used later in this section, an average control efficiency of 85% will be used since an actual distribution of scrubber collection efficiencies is not available.

Emission factors for the emission species at ammoniation-granulation plants as a function of emission source categories are shown in Table 17. The emission factors are calculated by averaging the appropriate values in Table B-1, Appendix B. The accuracy values were established by applying a "Student t" test to the input data.

The "t" test deals with the estimation of a true value from a sample and the establishment of confidence ranges within which the true value can be said to fall.[40] The "t" test is applied to the input data because the sample sizes are fewer than 30 in number and thus may not be normally distributed.

The calculated value of "t" is defined as the difference between the mean of a sample, $\overline{X}$, and the true mean of the population, μ, from which the sample was drawn, divided by the estimated standard deviation of the mean, $s(\overline{X})$:

$$t = \frac{|\overline{X} - \mu|}{s(\overline{X})} \qquad (3)$$

where $s(\overline{X}) = \frac{s(X)}{\sqrt{n}}$

$s(X)$ = the estimated standard deviation of the sample

n = number of degrees of freedom

[40]Volk, W. Applied Statistics for Engineers, 2nd Edition. New York, McGraw-Hill Book Co., 1969. 110 p.

Table 17. UNCONTROLLED EMISSION FACTORS FOR AMMONIATION-GRANULATION FERTILIZER PLANTS

Emission source category	Emission factor, g/kg				
	Ammonia	Total chlorine	Total fluorine	Total phosphorus	Particulate
Materials storage and handling	0	0	0	0	0.5 ± 300%[a]
Ammoniator-granulator	0.503 ± 104%	0.030 ± 186%	0.0013 ± 57%	0.0011 ± 87%	0.175 ± 356%[b]
Dryer and cooler	0.316 ± 44%	0.014 ± 175%	0.0083 ± 70%	0.0316 ± 133%	0.23 ± 48%
Screen and oversize mill	0	0	0	0	0.25 ± 300%[a]
Bagging and loading	0	0	0	0	0.25 ± 300%[a]
Total plant	0.819 ± 66%	0.044 ± 175%	0.0096 ± 61%	0.0327 ± 133%	1.40 ± 300%

[a]These values are a result of engineering estimates of similar processes because no source test data are available and the values may vary by a factor of three.

[b]The large error is due to only two data points which statistically results in a large spread for 95% confidence range. The standard deviation in the two data points is ±40%.

The "t" function gives the distribution of deviations of $\overline{X}$ from μ in terms of relative frequencies or probabilities. Though not normal, the "t" distribution does approach a normal distribution as n increases to infinity.

By transposing Equation 3, the true mean can be expressed in terms of the measured mean:

$$\mu = \overline{X} \pm ts(\overline{X}) \tag{4}$$

Verbally, the true mean can be said, with the tabulated probability of error, to be within the range of the calculated mean included in the limits of plus or minus t times the estimated standard deviation of the mean. The term $ts(\overline{X})$ is considered as an estimation of the precision of the measurement of $\overline{X}$.

The precision values in Table 17 were calculated for a 95% confidence limit, meaning that there is a 95% chance that the true mean, μ, will be in the range of $\overline{X} \pm ts(\overline{X})$. The statistical data used to establish the precision values are shown in Table B-2, Appendix B.

The procedure below was used to calculate the precision value for the sum of two numbers. It is based on the fact that the variance of the sum of two events is equal to the sum of the variances of each event:

$$(A \pm a) + (B \pm b) = (C \pm c) \tag{5}$$

where $C = A + B$

$c = \sqrt{a^2 + b^2}$

and a, b, and c are expressed as a part of A, B, and C, respectively, and not as a percentage. This procedure was used to calculate the precision values for ammonia and total fluorine emissions for a total plant emission factor.

There are no source test data for particulate emissions from materials storage and handling, screen and oversize mill, and bagging and loading operations. Therefore, the particulate emission factors assigned to these source categories were based on engineering estimates and EPA emission factors for similar sources. The U.S. EPA and several state EPA's are using an uncontrolled emission factor of 0.5 g/kg of fertilizer for emissions from materials storage and handling operations at fertilizer plants.[41-46] These emission factors may vary by as much as a factor of three, depending on the individual plants.

The stack data for an average ammoniation-granulation plant are shown in Table 18. The stack height for the total plant is for a separate stack from the process operations. This final stack is downstream from the wet scrubber.

---

[41]Private communications. Jim Price. Texas Air Control Board, Austin.

[42]Private communications. Ray Beckett. Illinois EPA, Springfield.

[43]Private communication. Allen Leevin. Ohio EPA, Dayton. September 12, 1974.

[44]Private communications. Robert Iacampo. Florida EPA, Tallahassee.

[45]Private communication. John Pruessner. Indiana Air Pollution Control Board, Indianapolis. September 19, 1974.

[46]Compilation of Air Pollutant Emission Factors. U.S. Environmental Protection Agency. Washington. Publication No. AP-42. February 1972. p. 6.10.

Table 18. STACK DATA FOR AMMONIATION-GRANULATION PLANTS

Emission source category	Stack data			
	Height, m	Diameter, m	Temp., °C	Flow rate, m^3/min
Materials handling and storage	No stack	N.A.[a]	N.A.	N.A.
Ammoniator-granulator	17.7	0.6	93	1,586
Dryer and cooler	16.8	0.9	65	368
Screen and oversize mill	No stack	N.A.	N.A.	N.A.
Bagging and loading	No stack	N.A.	N.A.	N.A.
Total plant	24.1	1.1	62	481

[a]N.A. = not applicable.

One problem at these plants that is not reflected in Table 17 is the emission of ammonium chloride (NH_4Cl) aerosols from the ammoniator-granulator. These small (0.1 μm to 5.0 μm) particles cannot be removed by low efficiency (<90%) wet scrubbers, and occasionally produce a dense (>70% opacity) white plume. The plumes from some plants exceed state opacity regulations.[19] No source test data exist for NH_4Cl emissions, but the emission factor for chlorine (0.044 g/kg ± 175% of product), assuming all chlorine is converted to NH_4Cl, can be used as an effective upper limit.

2. Emission Characteristics

a. Emission Effects - Human - In order to evaluate the health effects of certain chemicals the American Conference of Governmental Industrial Hygienists (ACGIH) has adopted a qualitative toxicity hazard scale which describes the probable human response to exposure to the chemical substance. These potential hazard values for the air emission species emitted from ammoniation-granulation plants are shown in Table 19.

Table 19. HUMAN HAZARD POTENTIAL DUE TO EXPOSURE TO AIR EMISSIONS FROM AMMONIATION-GRANULATION PLANTS

Emission species	ACGIH toxicity rating[47]		TLV®[a,48]	
	Acute	Chronic	mg/m^3	ppm by vol
NH_3 vapor	Moderate	Slight	18	25
NH_4 salts, inorganic	Slight	Slight	(10)	NA[b]
Cl_2 vapor	Very toxic	Unknown	3	1
Chloride salts, inorganic	Slight	Slight	(10)	NA
NH_4Cl	Slight	Slight	10	NA
$Ca_3(PO_4)_2$	Slight	Slight	(10)	NA
$(NH_4)_2HPO_4$	Slight	Unknown	(10)	NA
H_3PO_4	Moderate	Moderate	1	NA
Phosphate salts, inorganic	Very low	Very low	(100)	NA
F_2	Very to extremely toxic	Very toxic	0.2	0.1
HF	Very toxic	Moderate	2	3
Fluoride compounds, inorganic	Very toxic	Very toxic	2.5	1.0
Particulates	Slight	Unknown	10	NA

[a]Values in parentheses are assigned TLV's based on ACGIH ratings.
[b]NA = not applicable.

The acute toxicity rating is a qualitative measure of the probability that injury may be caused to man as a result of short duration exposure. Acute, used in a medical sense, means "of short duration" and refers to a single exposure of a duration measured in seconds, minutes or hours.[47]

[47]Sax, N. I. Dangerous Properties of Industrial Materials. 3rd Edition. New York, Reinhold Book Corp., 1968. 1251 p.

[48]TLV's® Threshold Limit Values for Chemical Substances and Physical Agents in the Workroom Environment with Intended Changes for 1975. American Conference of Governmental Industrial Hygienists. Cincinnati. 1975. 97 p.

Chronic exposures refer to prolonged or repeated exposures of "long duration," measured in terms of days, months, or years.

An acute toxicity rating of "slight" refers to a material which on single exposures lasting seconds, minutes, or hours causes only slight detrimental health effects, essentially regardless of the quantity or extent of exposure. An acute toxicity rating of "very toxic" refers to a material which on single exposures lasting seconds, minutes or hours causes injury of sufficient severity to threaten life or to cause permanent physical impairment or disfigurement.

Threshold limit values (TLV's) set by the ACGIH represent conditions under which it is believed that nearly all workers may be repeatedly exposed day after day, without adverse effect.[48] For example, the ACGIH believes that a person can be exposed to 18 mg/m^3 of vaporous ammonia throughout an 8-hour day without experiencing adverse effects.

In experimental toxicology it is common practice to determine the quantity of poison per unit of body weight (of an experimental animal) that will have a fatal effect. The values are expressed as milligrams of poison per kilogram of body weight. A commonly used concentration figure is the amount of poison which will kill one-half of a group of experimental animals. This is known as the LD_{50} test (lethal dose - 50%) representing 50% fatalities. When TLV's are not available, LD_{50} values can be used to estimate the relative toxicity of a chemical.

The particulate emissions from materials storage and handling, screen and oversize mill, and bagging and loading operations consist of raw material and mixed fertilizer particles. The

TLV's for the raw materials, secondary, and micronutrients used by fertilizer mixing plants are given in Appendix C. A composite TLV of 10 mg/m^3 will be used for particulate emissions in general when no specific chemical analysis is provided.

b. Particle Size - The particle size analyses of the granular raw materials used at ammoniation-granulation plants are shown in Appendix A. Approximately 90% of these materials range in size between 1 mm and 4 mm in diameter, with approximately 5% less than 1 mm in diameter. Ammoniation-granulation plants produce granular fertilizers ranging in size from 1 mm to 4 mm in diameter.

The particle size distribution analyses for the uncontrolled emissions from the dryer, cooler, and bagging operations are shown in Table 20.[49] The solids loading for the dryer ranged from 1.6 to 9.2 g/m^3. Approximately 66% of the

Table 20. PARTICLE SIZE DISTRIBUTION OF THE EMISSIONS FROM THE DRYER, COOLER, AND BAGGING OPERATIONS[49]

Particle size, μm	Percent distribution less than particle size		
	Dryer	Cooler	Bagging
5	6.3	6.2	2
10	12	11.1	3
20	22	20.0	5.8
30	29	24.1	14
40	34	32.0	31
>40	66	68.0	69

[49]Particulate Pollutant System Study, Vol. III - Handbook of Emission Properties. U.S. Environmental Protection Agency. Washington. PB 203522. May 1971. p. 313-338.

emissions by weight from the dryer are greater than 40 μm in diameter and approximately 68% of the emissions by weight from the cooler and bagging operations are greater than 40 μm in diameter.

There is no information in the literature on the particle size distribution of emissions from an ammoniator-granulator.

c. Atmospheric Stability - To fully characterize the emission species, their chemical stabilities in the atmosphere must be considered. In the atmosphere, an emission species may undergo either a photochemically induced reaction with other chemicals or photochemical dissociation. Ultraviolet light is usually responsible for supplying the energy needed to initiate the photochemical reactions.

The primary reaction process for ammonia vapor (NH_3) is the photochemical dissociation of:[50]

$$NH_3 \xrightarrow{h\nu} NH_2 + H \qquad (6)$$

Unfortunately, no data describe how much of the NH_3 is dissociated. The NH_2 radical is then free to react with O_2 to form NO and H_2O. Again, the rates of this secondary reaction have not yet been determined.

Chlorine emissions consist primarily of stable inorganic chlorine salts (e.g., NH_4Cl), but a small portion (<10%) is emitted as free chlorine. Photochemical reaction studies have shown that the free chlorine will combine with olefins

[50]McNesby, J. R., and H. Okabe. Vacuum Ultraviolet Photochemistry. In: Advances in Photochemistry, Vol. 3, Noyes, W. A., Jr. (ed). New York, John Wiley and Sons Publishers, 1964. p. 157-240.

such as ethylene to form chloroethylenes.[51] While this vinyl chloride has a very low TLV (<0.001 g/m^3), it actually presents no problem around the mixing plants because: (1) the reaction rate between chlorine and olefins is believed to be low,[51] and (2) actually, less than 0.0006 gram of free chlorine per kilogram of fertilizer is emitted to the atmosphere due to existing control equipment.

Particulates in the atmosphere serve as activation sites and catalysts for photochemical reactions. The metal atoms in these particles serve as energy transfer agents by first absorbing high energy ultraviolet radiation and then transferring the energy to other chemical compounds - supplying the required energy for decomposition and the formation of other chemical compounds.

Turbulence in the atmosphere can cause the large (>100 μm) particles to break apart, producing small particles which can serve as condensation nuclei. Depending on the ambient temperature and relative humidity, these small particles can cause haze, fog, or rain.

Very little information exists about the photochemical nature of phosphate compounds and fluorides. Fluorides, especially HF, are very reactive and will react, for example, with olefins in the atmosphere.

---

[51] Cvetanovic, R. J. Addition of Atoms to Olefins in the Gas Phase. In: Advances in Photochemistry, Vol. 1, Noyes, W. A., Jr. (ed.). New York, John Wiley and Sons Publishers, 1963. p. 115-182.

B. BULK BLENDING PLANTS

1. Selected Emissions

Air emissions from bulk blending plants consist only of particulate matter composed of raw materials and mixed fertilizer particles. These particulate emissions may also include trace quantities (<0.1%) of herbicides.

Emissions from these plants are fugitive in nature, in that they are not emitted from a stack. The three process operations responsible for dust emissions are:

- Materials storage and handling
- Loading operations
- Fugitive building emissions

Fugitive dust emissions from materials storage and handling operations result from unloading hopper-bottom railroad cars and transporting the granular raw materials to the building by screw conveyors, belt conveyors, and bucket elevators. The loading of bulk fertilizer into open trucks constitutes another source of fugitive dust emissions.

Additional emissions issue from the windows, doors, and ventilation system of the bulk blending plant as a result of materials handling, mixing, and bagging operations within the building.

The particulate emission factors for emissions from the three sources at bulk blending plants are presented in Table 21. Since no source test data concerning emissions are available, an alternate method was used to establish emission factors. Observations at various blending plants indicated that the amount of dust emitted during the loading

Table 21. UNCONTROLLED PARTICULATE EMISSION FACTORS FOR BULK BLENDING FERTILIZER PLANTS

Emission source category	Emission factor, g/kg
Material storage and handling	0.1 ± 100%
Loading operations	0.1 ± 100%
Fugitive building dust	0.1 ± 100%
Total plant	0.3 ± 100%

operations depended on the type of raw materials used. Therefore, a particle size analysis of the basic raw materials used at blending plants was conducted. Detailed descriptions of the plants sampled and analytical procedures used are presented in Appendix D.

The emission factors in Table 21 are a result of this analysis and are based on the fraction of the raw material which has a particle size less than 44 μm. These small particles will remain suspended in the air long enough to be transported away from the blending plants' property lines. The larger particles which might be injected into the air due to the loading operations will settle to the ground within the plants' property lines.

The emission factors in Table 21 are reported as uncontrolled because less than 2% of the bulk blending plants use any form of pollution control equipment. Less than 5% of the plants use dust depressants (e.g., oil or 10-34-0) to reduce dust concentrations in the plant.

It is not possible to determine exactly how much secondary nutrients and micronutrients are added to bulk blended mixed fertilizers from the existing raw materials reporting systems.

Table 7 shows only the amount of these materials consumed as fertilizers in the U.S. in 1972. In order to determine a maximum emission factor for minor nutrient materials, the following estimation procedure is used for bulk blending plants:

$$\text{Emission factor, g/kg} = \frac{\left(\begin{array}{c}\text{Total agricultural}\\ \text{micronutrient}\\ \text{consumption}\end{array}\right) \times 52\% \times 70\% \times 0.03\%}{(2{,}820) \times (1{,}152)} \quad (9)$$

where the total agricultural micronutrient consumption is obtained from Table 7 and

52% = portion added to mixed fertilizers, based on the ratio of mixed to total fertilizer consumption, 1972

70% = portion added to bulk blended fertilizers, based on estimates by TVA experts[22]

0.03% = portion lost to atmosphere, based on emission factor of 0.3 g/kg

2,820 = number of bulk blend plants which add these materials, based on estimates by TVA experts (50% of 5,640 plants)[22]

1,152 = average plant annual fertilizer production rate, metric tons/yr

The results in Table 22 indicate that emission factors for all of the secondary nutrient and micronutrient materials, except gypsum, are less than 0.001% of the total plant emission factor. Therefore, based on the low emission factors and high TLV's (see Appendix C), these materials will be grouped with the particulate emissions in general and not carried as separate emission species.

In terms of emission factors for herbicides, a similar estimation procedure is used because consumption values for herbicides at bulk blending plants do not exist. The

Table 22. ESTIMATED MAXIMUM UNCONTROLLED EMISSION FACTORS FOR SECONDARY AND MICRONUTRIENT MATERIALS USED AT BULK BLENDING PLANTS

Material	Total agricultural micronutrient consumption, metric tons	Estimated emission factor, μg/kg	Percent of total emission factor
Aluminum compounds	140	0.005	<0.001
Boron compounds	4,500	0.2	<0.001
Calcium sulfate[a] (gypsum)	190,000	6.0	0.002
Copper compounds	500	0.02	<0.001
Iron compounds	9,300	0.3	<0.001
Magnesium compounds	1,300	0.04	<0.001
Manganese compounds	3,000	0.1	<0.001
Sulfur	25,000	0.8	<0.001
Zinc compounds	21,000	0.7	<0.001
Other	41,000	1.0	<0.001

[a]Not including the 887,585 Mg of gypsum applied directly to the soil in California.

following estimation procedure is used to calculate the maximum emission factor.

$$\text{Emission factor, g/kg} = \frac{(\text{Herbicide consumption}) \times 0.03\%}{(1{,}692) \times (1{,}152)} \quad (10)$$

where the herbicide consumption is obtained from Table 14 and

0.03% = portion lost to the atmosphere, based on emission factor of 0.3 g/kg

1,692 = number of bulk blending plants adding herbicides, based on estimates by TVA experts[3]

1,152 = average plant annual fertilizer production rate, metric tons/yr

The results of the analysis are shown in Table 23. The maximum emission factors range from 0.001 to 0.3 μg/kg of fertilizer produced and all species are less than 0.001% of the total particulate emissions. Herbicide emissions will be grouped with all particulate emissions because: (1) the emission factor for each herbicide never exceeds 0.001% of the total plant emission factor; and (2) the value of $\bar{\chi}_{max}$/TLV never exceeds 0.001.

2. Emission Characteristics

a. Emission Effects - Human - A composite TLV of 0.01 g/m^3 will be used for particulate emissions from bulk blending plants when considering the potential human health effects from exposure to these emissions. Since the chemical composition of these particulate emissions consists of raw materials, secondary nutrients, and micronutrient particles, the TLV's for these compounds are presented in Appendix C. The lowest reported TLV is 0.001 g/m^3.

Table 23. ESTIMATED MAXIMUM EMISSION FACTORS FOR SELECTED HERBICIDES (ACTIVE INGREDIENTS) USED AT BULK BLENDING PLANTS

Type of herbicide	Emission factor, μg/kg
Inorganic herbicides	0.008
Organic herbicides:	
Arsenicals	0.04
Phenoxys:	
2,4-D	0.2
2,4,5-T	0.006
MCPA	0.02
Other phenoxy	0.004
Total	0.2
Phenyl urea:	
Diuron	0.006
Linuron	0.008
Fluometuron	0.02
Other phenyl urea	0.002
Total	0.03
Amides:	
Propachlor	0.1
Propanil	0.03
Alnap	0.01
Alachlor	0.06
Other amides	0.003
Total	0.2
Carbamates:	
EPTA	0.02
Pebulate	0.004
Vernolate	0.02
Butylate	0.03
Other carbamates	0.02
Total	0.08
Dinitro group	0.03
Triazines:	
Atrazine	0.3
Propazine	0.01
Simazine	0.005
Other triazines	0.005
Total	0.3
Benzoics:	
Amiben	0.04
Dicamba	0.002
Other benzoics	0.001
Total	0.06
Other organics:	
Trifluralin	0.06
Nitralin	0.01
Dalapon	0.004
Norea	0.005
Fluorodifen	0.005
Others	0.02
Total	0.1

The TLV's for the herbicides used at bulk blending plants are shown in Appendix E. The lowest TLV is 0.0005 g/m^3. Since only three of these herbicides have established TLV's, the LD_{50} values are presented as a relative measure of hazard.

b. Atmospheric Stability - Since their chemical composition (inorganic salts) makes these particulate emissions stable in the atmosphere, they will not undergo photochemical reactions.

C. LIQUID MIX PLANTS

1. Selected Emissions

Only hot mix-type liquid mix plants have air emissions. Cold mix-type plants have none because they simply mix, without chemical reaction, two or more fluids at ambient temperature and pressure.[38]

The two process operations producing emissions are:

- The hot mix reactor
- Raw materials handling

Detailed descriptions of these two emission sources are given in Section III.E.2.

Emission species from hot mix plants are similar to those from ammoniation-granulation plants, namely:

- Ammonia vapor and ammonium salts
- Fluorine compounds
- Phosphorus compounds
- Particulates
- Herbicides

Chlorine emissions are eliminated because phosphoric acid is used instead of sulfuric acid, and the potash is added after the hot mix reactor. All of the emission species, except herbicides, are emitted from the hot mix reactor. Particulates and herbicides are emitted from the raw materials handling operations.

The emission factors for the emission species from liquid mix plants are given in Table 24. For consistency, these values are reported as uncontrolled emissions. The raw data used to compile these factors are presented in Appendix F.

Emission factors in Table 24 were averaged from source Test 1 and 2 (Appendix F) because experts at TVA indicated that the majority (>90%) of the hot mix-type plants use those operating conditions.[22]

The accuracy of the emission factors reported in Table 24 is ±100% when applied to hot mix plants which do not use a forced draft blower (>90% of plants) and ±300% when applied to plants which do use the blower (<10% of plants). These accuracy values are based on the following criteria:

- The accuracy of the source test data in Appendix F is approximately ±30%, based on analysis of the sampling train and communications with TVA experts who conducted the tests.[9]
- The range in the emission factors in the source test data was 10% to 100% from the average (Appendix F).
- The 300% accuracy value was established using Tests 3 and 4 (Appendix F) and comparing the values to those of Tests 1 and 2.

There are no emissions of secondary nutrients and micronutrients at liquid mix plants because they are added to the mixture either in a liquid form or a very soluble powdered form.

Table 24. UNCONTROLLED EMISSION FACTORS FOR LIQUID MIX FERTILIZER PLANTS

Emission source category	Emission factor, g/kg				Stack data			
	Ammonia	Total fluorine	Total phosphorus	Particulate	Height, m	Diam., m	Temp., °C	Flow rate, m^3/min
Hot mix reactor	0.073 ± 100%	0.001 ± 100%	0.0005 ± 100%	0.008 ± 100%	10.7	0.61	38	28
Raw materials handling	0	0	0	0.25 ± 200%[a]	N.S.[b]	N.S.	N.S.	N.S.
Total plant	$\overline{0.073}$ ± 100%	$\overline{0.001}$ ± 100%	$\overline{0.0005}$ ± 100%	$\overline{0.258}$ ± 100%	10.7	0.61	38	28

[a]Based on an engineering estimate; value may vary by a factor of two.

[b]N.S. = No stack.

The powdered form is added to the fluid mixture by hand pouring a bag (<22.7 kg) of material into the final mixing tank.

The estimated maximum emission factors for selected herbicides at liquid mix plants are shown in Table 25. The following estimation procedure was used because the existing materials reporting systems do not include the consumption of herbicides at liquid mix plants, and source test data do not exist for these emission species:

$$\text{Emission factor, g/kg} = \frac{(\text{Consumption value}) \times 0.025\%}{(2{,}214) \times (1{,}690)} \qquad (11)$$

where the consumption value is shown in Table 14 and

0.025% = portion lost to atmosphere, based on emission factor of 0.25 g/kg of herbicide (same as raw materials handling)

2,214 = number of liquid mix plants adding herbicides

1,690 = average plant annual production rate, metric tons/yr

2. Emission Characteristics

a. Emission Effects - Human - The TLV's for the various emission species at liquid mix plants are shown in Table 19. The TLV's for the raw materials used at these plants are given in Appendix C, and those for the selected herbicides appear in Appendix E.

b. Atmospheric Stability - The atmospheric stability of the emissions from liquid mix plants is identical to that of emissions from ammoniation-granulation plants (Section IV.A.2.c).

Table 25. ESTIMATED MAXIMUM EMISSION FACTORS FOR SELECTED HERBICIDES (ACTIVE INGREDIENTS) USED AT LIQUID MIX PLANTS

Type of herbicide	Emission factor, g/kg
Inorganic herbicides	0.00001
Organic herbicides:	
Arsenicals	0.00002
Phenoxys:	
2,4-D	0.00008
2,4,5-T	0.00001
MCPA	0.00001
Other phenoxy	<0.00001
Total	0.00009
Phenyl urea:	
Diuron	0.00001
Linuron	0.00001
Fluometuron	0.00001
Other phenyl urea	<0.00001
Total	0.00002
Amides:	
Propachlor	0.00006
Propanil	0.00002
Alnap	0.00001
Alachlor	0.00004
Other amides	<0.00001
Total	0.00012
Carbamates:	
EPTA	0.00001
Pebulate	0.00001
Vernolate	0.00001
Butylate	0.00002
Other carbamates	0.00002
Total	0.00007
Dinitro group	0.00002
Triazines:	
Atrazine	0.00014
Propazine	0.00001
Simazine	0.00001
Other triazines	0.00001
Total	0.00017
Benzoics:	
Amiben	0.00003
Dicamba	<0.00001
Other benzoics	<0.00001
Total	0.00003
Other organics:	
Trifluralin	0.00003
Nitralin	0.00001
Dalapon	<0.00001
Norea	0.00001
Fluorodifen	0.00001
Others	0.00001
Total	0.00006

D. ENVIRONMENTAL EFFECTS

The potential environmental effects of air emissions from fertilizer mixing plants can be studied in several ways. One method is to determine the ground level concentration of emission species downwind from the plant and compare this value to the ambient air quality standard for the criteria pollutants[a] or to the TLV for the noncriteria emission species. The comparison is known as the source severity, S, and is defined as:

$$S = \frac{\overline{\chi}_{max}}{F} \qquad (12)$$

where $\overline{\chi}_{max}$ = the maximum 24-hour time-weighted average ground level concentration for each emission species

F = primary ambient air quality standard for criteria pollutants,

or $F = TLV \times \frac{8}{24} \times \frac{1}{100}$, for noncriteria emission species,

and TLV = threshold limit value for each species

$\frac{8}{24}$ = correction factor to adjust the TLV to a 24-hour exposure level

$\frac{1}{100}$ = safety factor

Since ambient air quality standards exist for only five pollutants (particulates, SO_x, NO_x, CO, and oxidants), TLV's represent the only other basis for objective comparison for noncriteria emission species.

The 24-hr time-weighted average of the maximum downwind ground level concentration of each emission species emitted

[a]Criteria pollutants are those for which air quality standards have been established.

from a typical plant (Table 1), is defined as:[52]

$$\bar{\chi}_{max} = \chi_{max} \left(\frac{t_0}{t_1} \right)^{0.17} \tag{13}$$

where

$$\chi_{max} = \frac{2\ Q}{\pi e \bar{u} h^2} \tag{14}$$

and Q = emission rate, g/s

π = 3.14

e = 2.72

$\bar{u}$ = average wind speed, m/s

h = stack height, m

For a 24-hr time-weighted ground level concentration, the values of time for t_0 and t_1 (Equation 13) are 3 min and 1,440 min respectively. Therefore, Equation 13 reduces to:

$$\bar{\chi}_{max} = \chi_{max} \left(\frac{3}{1,440} \right)^{0.17} = 0.35\ \chi_{max}$$

The equation for χ_{max} (Equation 14) is derived from the general plume dispersion equation for an elevated source, ground level ($z = 0$) concentration, radially ($y = 0$) downwind from the source, and for U.S. average atmospheric stability conditions.[52] A wind speed of 4.5 m/s (10 mph) is used for $\bar{u}$.

Table 26 presents the values of $\bar{\chi}_{max}$ as a function of emission source for each emission species from a typical plant of each of the three types. These values are based

---

[52]Turner, D. B. Workbook of Atmospheric Dispersion Estimates. U.S. Department of Health, Education and Welfare. Cincinnati. Public Health Service. Publication No. 999-AP-26. 1969. 62 p.

Table 26. MAXIMUM GROUND LEVEL CONCENTRATIONS (χ_{max}) OF CONTROLLED EMISSION SPECIES FROM FERTILIZER MIXING PLANTS

Emission source category	Average stack height, m	$\bar{\chi}_{max}$, μg/m³				
		Ammonia	Total chlorine	Total fluorine	Total phosphorus	Particulate
Ammoniation-granulation plants						
Materials storage and handling	6.0[a]	0	0	0	0	154
Ammoniator-granulator	17.7	17.7	1.1	<0.1	<0.1	6.2
Dryer and cooler	16.8	12.4	0.5	<0.1	1.2	9
Screen and oversize mill	16.8	0	0	0	0	9.8
Bagging and loading	6.0[a]	0	0	0	0	76.8
Total plant	24.1[b]	15.6	0.8	0.2	0.6	26.6
Bulk blend plants[c]						
Materials storage and handling	6.0[a]	0	0	0	0	12.6
Loading operations	6.0[a]	0	0	0	0	12.6
Fugitive building dust	6.0[a]	0	0	0	0	12.6
Total plant	6.0[a]	0	0	0	0	37.9
Liquid mix plants						
Hot mix reactor	15.0	0.6	0	0.1	<0.1	<0.1
Raw materials handling	6.0[a]	0	0	0	0	0.2
Total plant	15.0	0.6	0	0.1	<0.1	0.2

[a]This process has no stack; only fugitive emissions are present; a stack height of 6 m was thus used.

[b]Final stack after wet scrubber.

[c]Based on uncontrolled emission factors.

on the current level of emission control efficiencies at these plants in order to evaluate the true environmental impact of the emissions. On the average, ammoniation- granulation and liquid mix plants use medium efficiency (85%) wet scrubbers to control emissions and recover raw materials. (A detailed analysis of the existing control equipment is presented in Section V.) Bulk blend plants, on the other hand, use no emission control devices and the values of $\bar{\chi}_{max}$ for these plants are based on uncontrolled emission factors. The values of S corresponding to the values of $\bar{\chi}_{max}$ for total plant emissions from each typical mixing plant are given in Table 27.

Table 27. VALUES OF MEAN SOURCE SEVERITY FOR CONTROLLED EMISSIONS

Pollutant	TLV, mg/m^3	Mean source severity		
		Ammoniation-granulation	Bulk blend[a]	Liquid mix
Ammonia	18	0.26	0	0.01
Total chlorine	3	0.08	0	0
Total fluorine	2.5	0.02	0	0.01
Total phosphorus	100	0.002	0	<0.01
Particulate	0.26[b]	0.1	0.14	0.01

[a]Based on uncontrolled emission factor.
[b]Primary ambient air quality 24-hour standard.

The potential environmental impact of the emissions from mixing plants can also be evaluated by determining the total mass of each emission species emitted. The annual masses of emissions from all fertilizer mixing plants in the U.S. are given in Table 28.

Table 28. ANNUAL MASSES OF EMISSIONS FROM FERTILIZER MIXING PLANTS IN THE U.S.

Emission source category	Mass of emissions, metric tons/yr				
	Ammonia	Total chlorine	Total fluorine	Total phosphorus	Particulates
Ammoniation-granulation plants[a]					
Materials storage and handling	0	0	0	0	685 ± 2,050
Ammoniator-granulator	690 ± 720	40 ± 70	2 ± 1	2 ± 2	240 ± 850
Dryer and cooler	430 ± 190	20 ± 30	11 ± 8	43 ± 60	315 ± 150
Screen and oversize mill	0	0	0	0	340 ± 1,030
Bagging and loading	0	0	0	0	340 ± 1,030
Total plant	1,120 ± 740	60 ± 100	13 ± 8	45 ± 60	1,920 ± 5,760
Bulk blending plants[b]					
Materials storage and handling	0	0	0	0	640 ± 640
Loading operations	0	0	0	0	640 ± 640
Fugitive building dust	0	0	0	0	640 ± 640
Total plant	0	0	0	0	1,930 ± 1,930
Liquid mix plants[a]					
Hot mix reactor	50 ± 50	0	1 ± 1	0.4 ± 0.4	6 ± 6
Raw materials handling	0	0	0	0	175 ± 350
Total plant	50 ± 50	0	1 ± 1	0.4 ± 0.4	180 ± 180
Total mixed fertilizer industry[c]	1,170 ± 740	60 ± 100	14 ± 8	45 ± 60	4,030 ± 4,030

[a]Based on controlled (85%) emission factors.

[b]Based on uncontrolled emission rates.

[c]Columns may not total due to rounding.

The total masses of particulate emissions from each of the three types of mixing plants in the U.S. are shown separately in Table 29. Controlled (85%) particulate emission factors were used for ammoniation-granulation and liquid mix plants because all of these plants on the average use medium efficiency (85%) wet scrubbers. Table 29 compares the masses of particulate emissions from fertilizer mixing plants with the total amount of particulate emissions in the U.S. in 1972.[53] The results indicate that total particulate emissions from fertilizer mixing plants do not exceed 0.02% of the total national particulate emissions.

Table 29. COMPARISON OF FERTILIZER MIXING PLANT GENERATED PARTICULATE EMISSIONS TO TOTAL NATIONAL PARTICULATE EMISSION VALUES

Plant type	Total particulates emitted, metric tons/yr	National particulate emissions,[53] metric tons/yr	Percent contribution by mixing plants
Ammoniation-granulation	1,920 ± 5,760	16,843,754	0.01
Bulk blend	1,930 ± 1,930	16,843,754	0.01
Liquid mix	181 ± 181	16,843,754	0.001
Total	4,031 ± 4,031		0.02

A detailed comparison of the mass of particulates emitted by fertilizer mixing plants to the total mass of particulate emissions in each state is presented in Appendix G. The production values for each state are determined by multiplying

[53]National Emission Report - 1972. U.S. Environmental Protection Agency. Washington. Publication No. EPA-450/2-74/012. June 1974. 422 p.

the average plant production rate by the number of plants and summing for the three types of mixing plants. This procedure is necessary because state production values are not compiled by the materials flow reporting systems. Only state fertilizer consumption values are reported. The mass of particulates emitted by each type of mixing plant in each state is calculated by the following equation:

$$\begin{pmatrix}\text{Mass of}\\ \text{particulate}\\ \text{emissions}\end{pmatrix} = \begin{pmatrix}\text{Particulate}\\ \text{emission}\\ \text{factor}\end{pmatrix} \times \begin{pmatrix}\text{Average annual}\\ \text{production}\\ \text{rate}\end{pmatrix} \times \begin{pmatrix}\text{Number of}\\ \text{plants in}\\ \text{the state}\end{pmatrix} \quad (15)$$

The values for the ratio of the mass of particulate emissions from fertilizer mixing plants to total state particulate emissions range from 0.001% to 0.2% with an average value of 0.03%.

The population density around a mixing plant is another factor in determining its potential environmental impact. A detailed study was made on mixing plant locations, production rates, and population distributions in four states that contain 36% of the mixing plants: Illinois, Iowa, Missouri, and Ohio. These states were also considered because they could provide detailed consumption values by counties. Population densities were calculated from 1970 census data for each county that contained fertilizer mixing plants. Tonnage reports (amount of fertilizer consumed in each county) were used instead of production values because production rates were not reported on a county by county basis. The results of this comparison are shown in Table 30. They indicate that 56.6% of the mixing plants are located in counties with a population density of less than 19 persons/km^2. In addition, 82.1% of the mixing plants are located in counties of less than 39 persons/km^2.

Table 30. DISTRIBUTION OF FERTILIZER MIXING PLANTS IN SELECTED STATES[a]

County population density, persons/km^2	Number of counties in range	Number of plants in these counties	Percent of plants in range	Tonnage[b] consumed in county	Percent tonnage in counties
<19	211	1,546	56.6	2,239	52.0
19 to 39	77	698	25.5	1,189	27.6
39 to 193	56	416	15.2	779	18.1
193 to 386	4	18	0.7	43	1.0
386 to 579	5	21	0.8	26	0.6
>579	5	29	1.2	30	0.7
Total	358	2,728	100.0	4,306	100.0

[a]Selected states were Illinois, Iowa, Missouri, and Ohio because their county tonnage values are available.

[b]Tonnage expressed in Gg.

It has been reported that the majority of the fertilizer mixing plants sell their products within an 80 km radius from the plant.[15,28] This fact is supported by the close correlation shown in Table 30 between the location of the mixing plants and the consumption of mixed fertilizers.

Using the average population density around a mixing plant, one can determine an affected population. The affected population is defined as the number of persons around a typical mixing plant exposed to emission concentrations which cause the ratio of $\bar{\chi}/F$ to exceed 0.1 or 1.0. Plume dispersion calculations (Equation 5.13, Reference 52) determine the two downwind distances for which the ratio falls below 0.1 (see Figure 26). Calculations are also made for a ratio of 1.0. These two distances are used to calculate the annular area around the plant. The affected population is calculated by multiplying this area by the average population density around a mixing plant (39 persons/km^2).

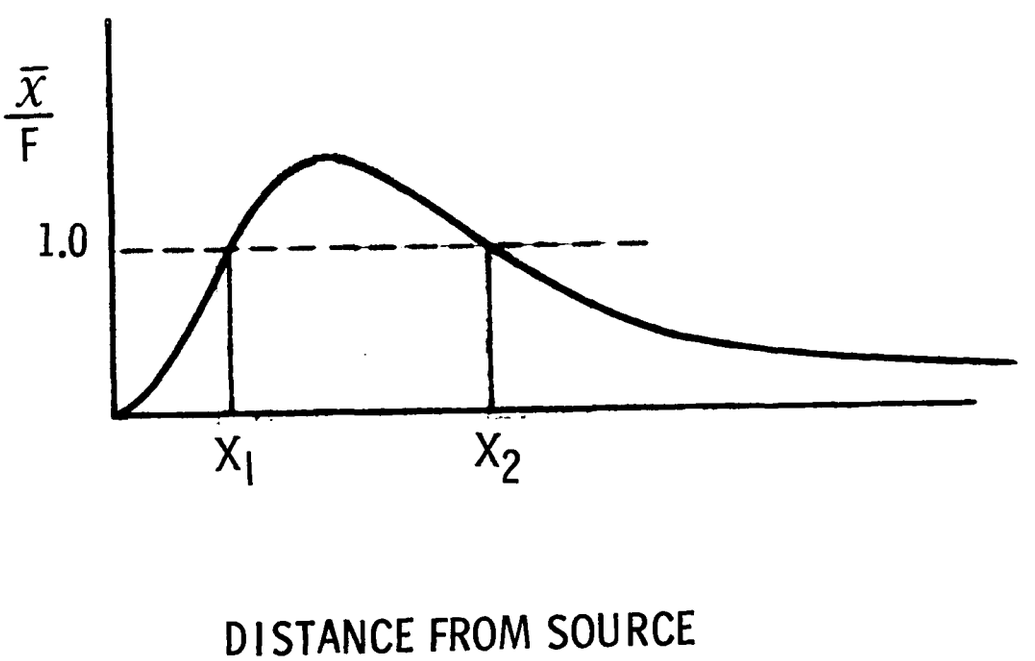

Figure 26. General distribution of mean source severity as a function of distance from the source, showing the two general roots to the plume dispersion equation

The affected population values for emissions from the three representative mixing plants described in Table 1 are given in Table 31.

Table 31. AFFECTED POPULATION AROUND REPRESENTATIVE FERTILIZER MIXING PLANTS

Plant type	Emission species	Affected population, persons	
		S > 0.1	S > 1.0
Ammoniation-granulation	Ammonia	48	0[b]
	Chlorine	0[a]	0
	Fluorine	0	0
	Phosphorus	0	0
	Particulate	6	0
Bulk blend	Particulate	2	0
Liquid mix	Ammonia	0	0
	Fluorine	0	0
	Phosphorus	0	0
	Particulate	0	0

[a]Values of zero mean that the values of S do not exceed 0.1.

[b]Values of zero indicate that the values of S do not exceed 1.0.

SECTION V

CONTROL TECHNOLOGY

The type of air pollution control equipment used at fertilizer mixing plants varies from plant to plant depending on plant type, production capacity, and operating conditions. For example, bulk blending plants that operate on a batch-type basis for 4 months per year and mix 900 metric tons of fertilizer use no emissions control equipment. On the other hand, large (>45 x 10^3 metric ton/yr) ammoniation-granulation plants that operate year-round use cyclones and wet scrubbers to recover product and reduce emissions.

With the rapidly increasing prices of fertilizers, it is becoming more economical to recover emissions in the manufacturing process and recycle them. In general, several types of pollution control equipment can be used. The collection efficiencies for various types of this equipment are shown in Figure 27. The following sections discuss in detail the measures used by the three types of mixing plants to reduce emissions by either process modification or pollution control devices.

A. AMMONIATION-GRANULATION PLANTS

1. Process Modifications

In the ammoniation reaction, ammonia is mixed with sulfuric or phosphoric acid. When sulfuric acid is used, it reacts

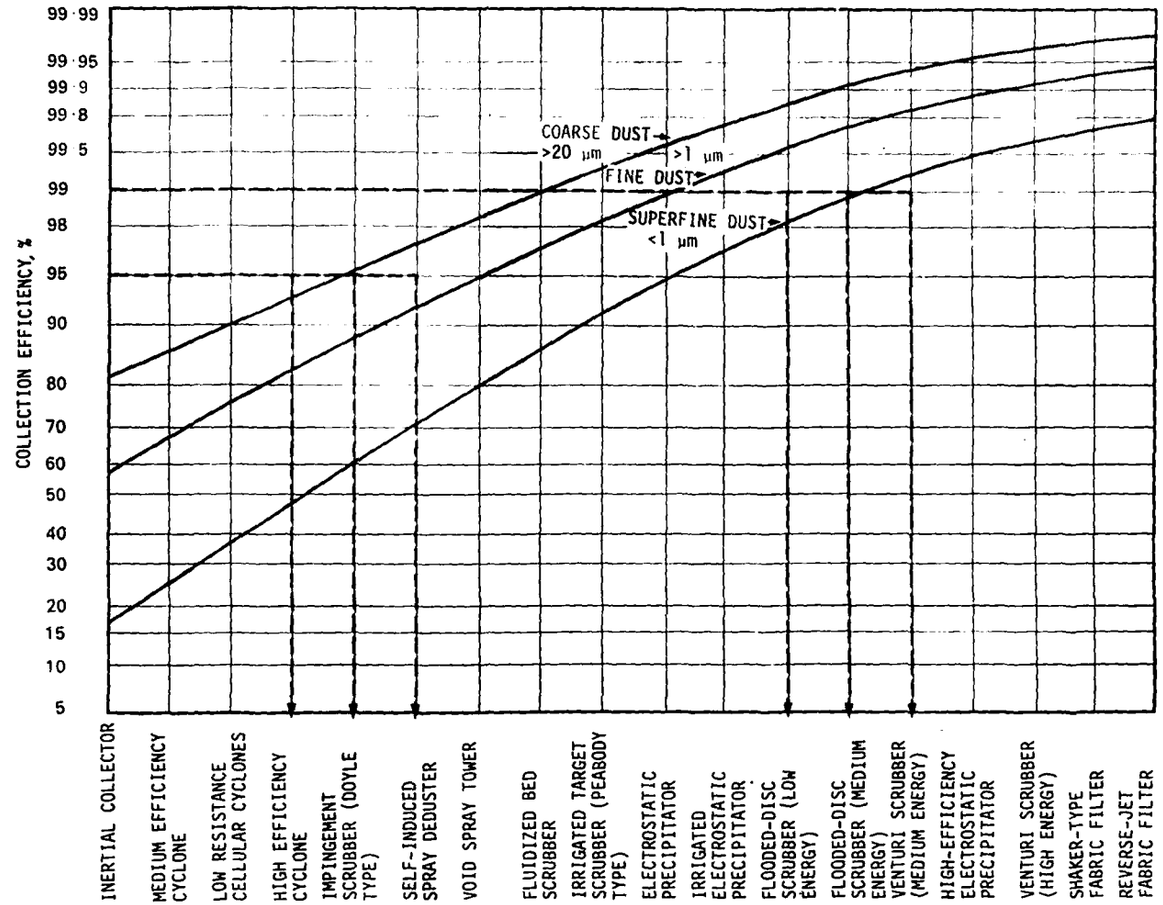

Figure 27. Particulate collection efficiencies for various types of control equipment[54]

[54]Towards Cleaner Air - A Review of Britain's Achievements. Central Office of Information for the British Overseas Trade Board. London. April 1973. 59 p.

with potassium chloride in the granulator to form hydrogen chloride, which in turn reacts with ammonia to form ammonium chloride aerosols. The aerosol particles are small (0.1 μm to 5 μm) and produce a white plume.

One approach toward the elimination of these emissions is to use superphosphoric acid instead of sulfuric acid. The results of stack measurements at an ammoniation-granulation plant in Maryland using these two acids are shown in Table 32. Ammonia emissions from the ammoniator-granulator were reduced by 94% when superphosphoric acid was substituted for sulfuric acid. In addition, chlorine emissions decreased by 99.9% during the same test. Ammonium chloride emissions are reduced when the ammonia emissions are decreased, and the chlorine remains in solution.

Table 32. STACK MEASUREMENTS AT AN AMMONIATION-GRANULATION PLANT IN MARYLAND[55]

Source[a]	Emissions, g/kg of fertilizer	
	With H_2SO_4[b]	With H_3PO_4 (76% P_2O_5)[c]
Ammoniator-granulator:		
NH_3	3.37	0.195
Cl	1.78	0.002
F	0.001	<0.0002
P_2O_5	0.002	0.002
Plant stack:		
NH_3	1.87	0.54
Cl	0.06	0.018
F	0.003	0.0018
P_2O_5	0.06	0.039

[a]Samples taken after the wet scrubber.

[b]Using 62.5 g/kg of fertilizer.

[c]Using 75 g/kg of fertilizer.

[55]Achorn, F. P., H. L. Balay, E. D. Myers, and R. D. Grisso. A Pollution Solution for Granulation Plants. Farm Chemicals. 134, August 1971.

While this process modification does reduce emissions, its use would eliminate a large sink for sulfuric acid produced by pollution control equipment in other industries. Ammoniation-granulation plants consume 816.5 x 10^3 metric tons of sulfuric acid a year,[22] approximately 20% of which is obtained from pollution control equipment.

The particulate collection efficiency of dry cyclones increases as the gas flow rate increases. However, increasing the exhaust gas flow rate also increases the gas flow rate through the dryer. It has been reported that additional dust is emitted from the discharge end of the dryer when the gas velocity exceeds 122 m/min.[26] One way to increase the gas velocity in the cyclone, but not in the dryer, is to install an open duct in the exhaust line between the cyclone and the dryer and cooler discharge as shown in Figure 28. The velocity of the gas through the dryer and cooler can then be regulated by means of the damper installed in the line. This duct system can also be connected to the exhaust system to collect particulate emissions from the screens, crushing mills, elevators, and transfer points as shown in Figure 29.

High dust concentration also occurs where chutes from the screen and cyclones empty onto the recycle belt conveyor. Engineers at TVA working with fertilizer companies have eliminated most of this dust by installing a flap cover to form a dust seal on the cyclone, as shown in Figure 30.[26] Other companies have found that a molded rubber seal and cleated drag conveyor, as are shown in Figure 31, eliminate this source of emissions.

2. Pollution Control Devices

All ammoniation-granulation plants use some form of air pollution control device, such as wet scrubber, cyclone,

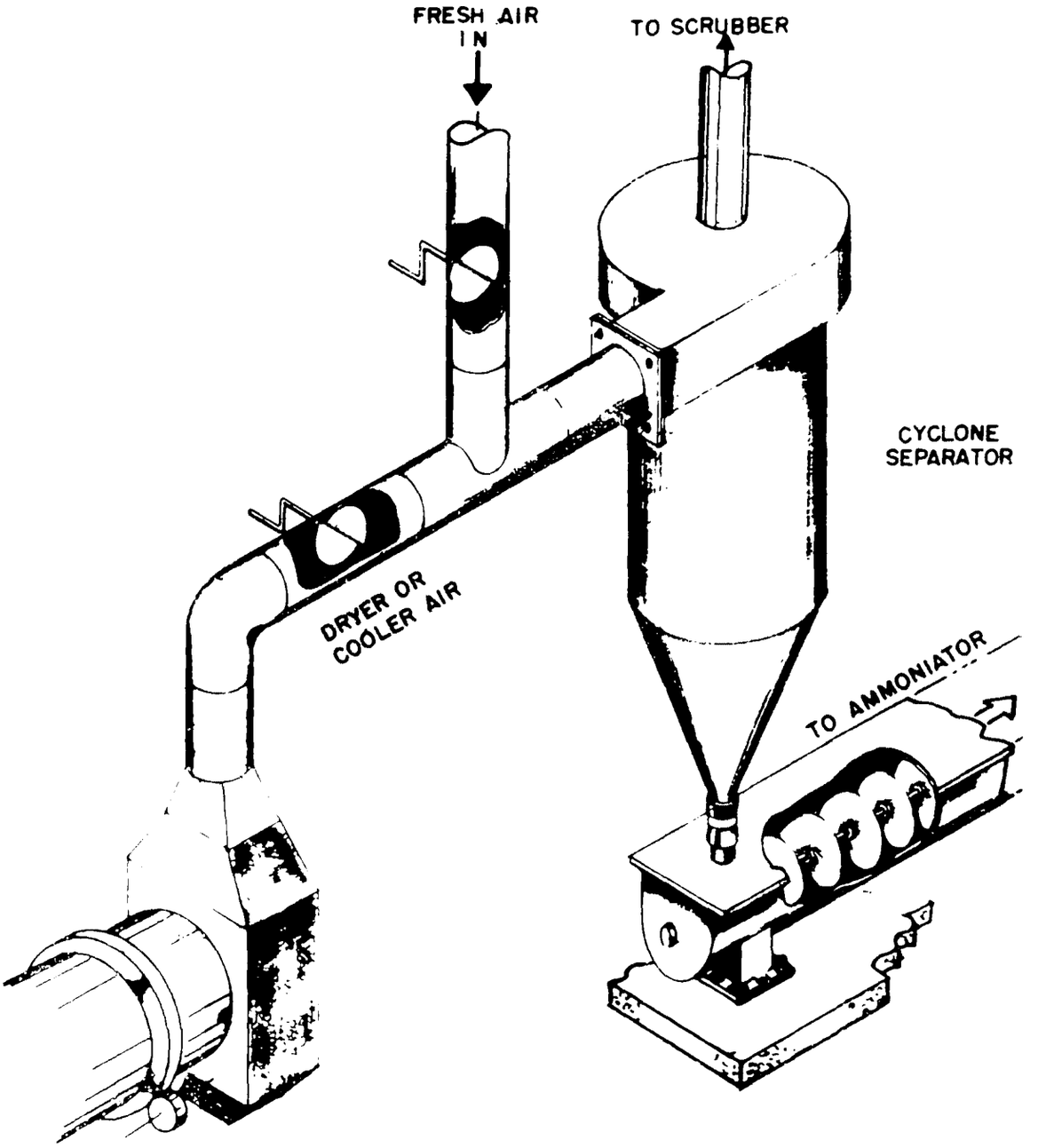

Figure 28. Cyclone gas velocity control[26]

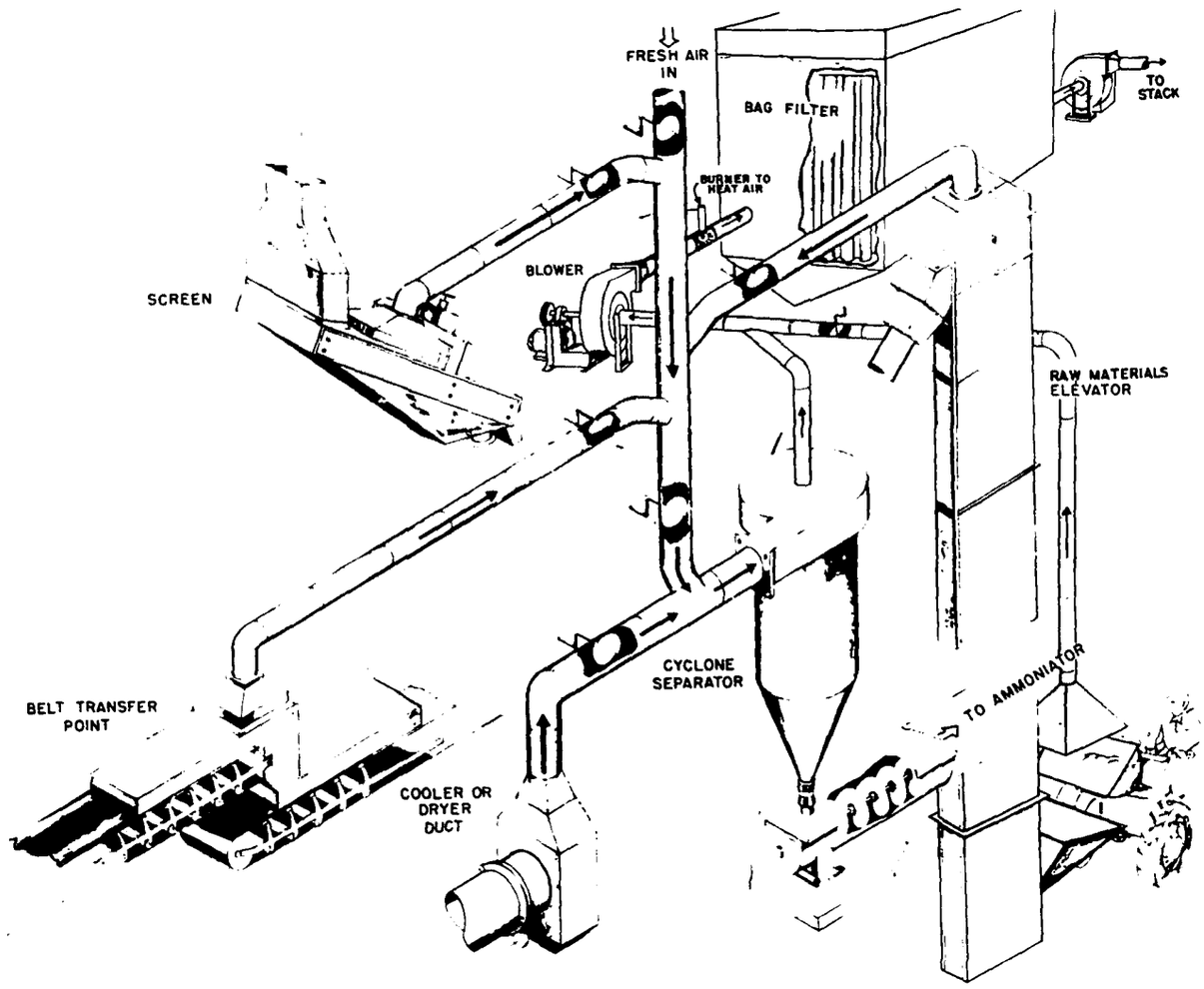

Figure 29. Utilization of dryer and cooler exhaust blower to remove in-plant dust[26]

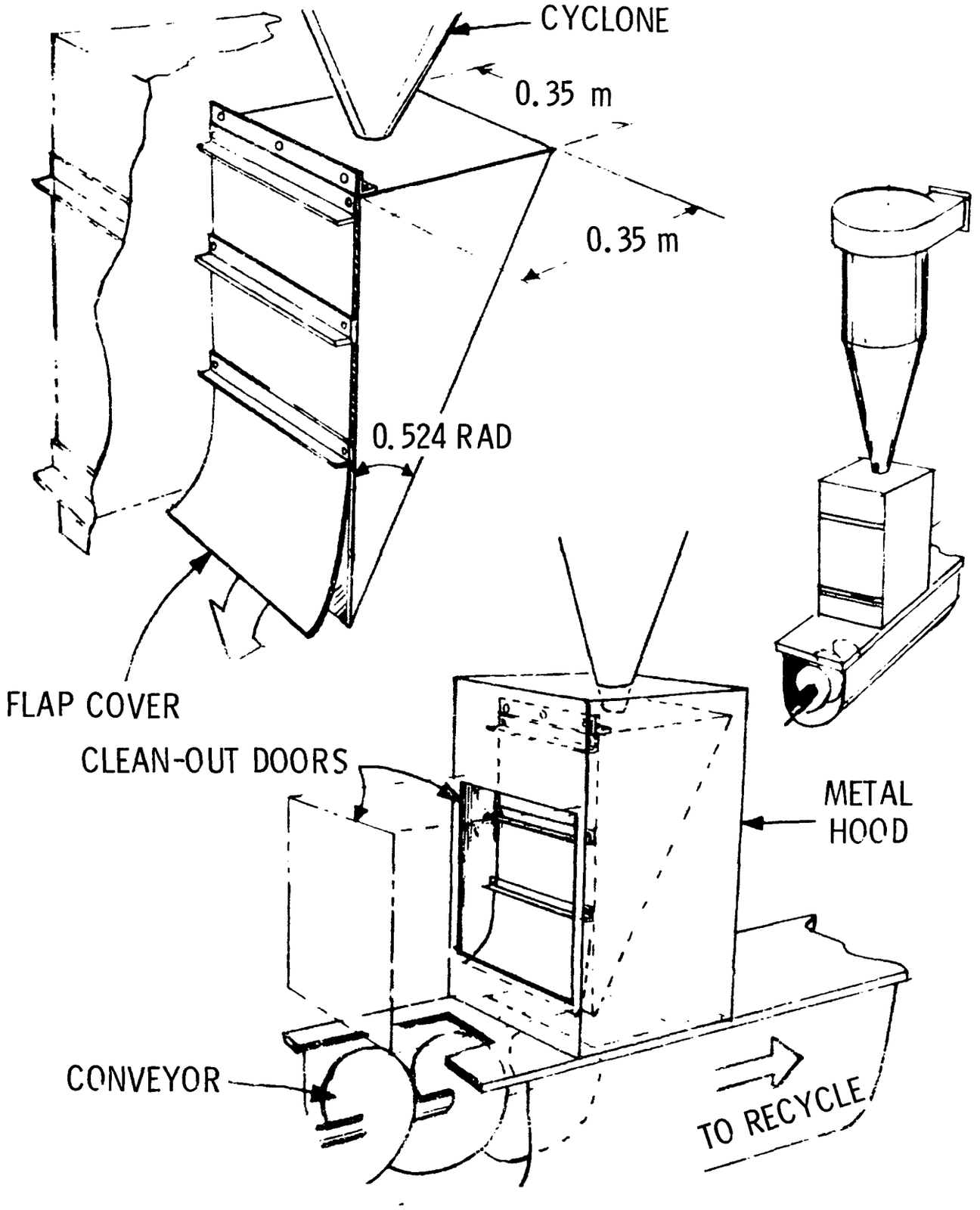

Figure 30. Dust collector seal[26]

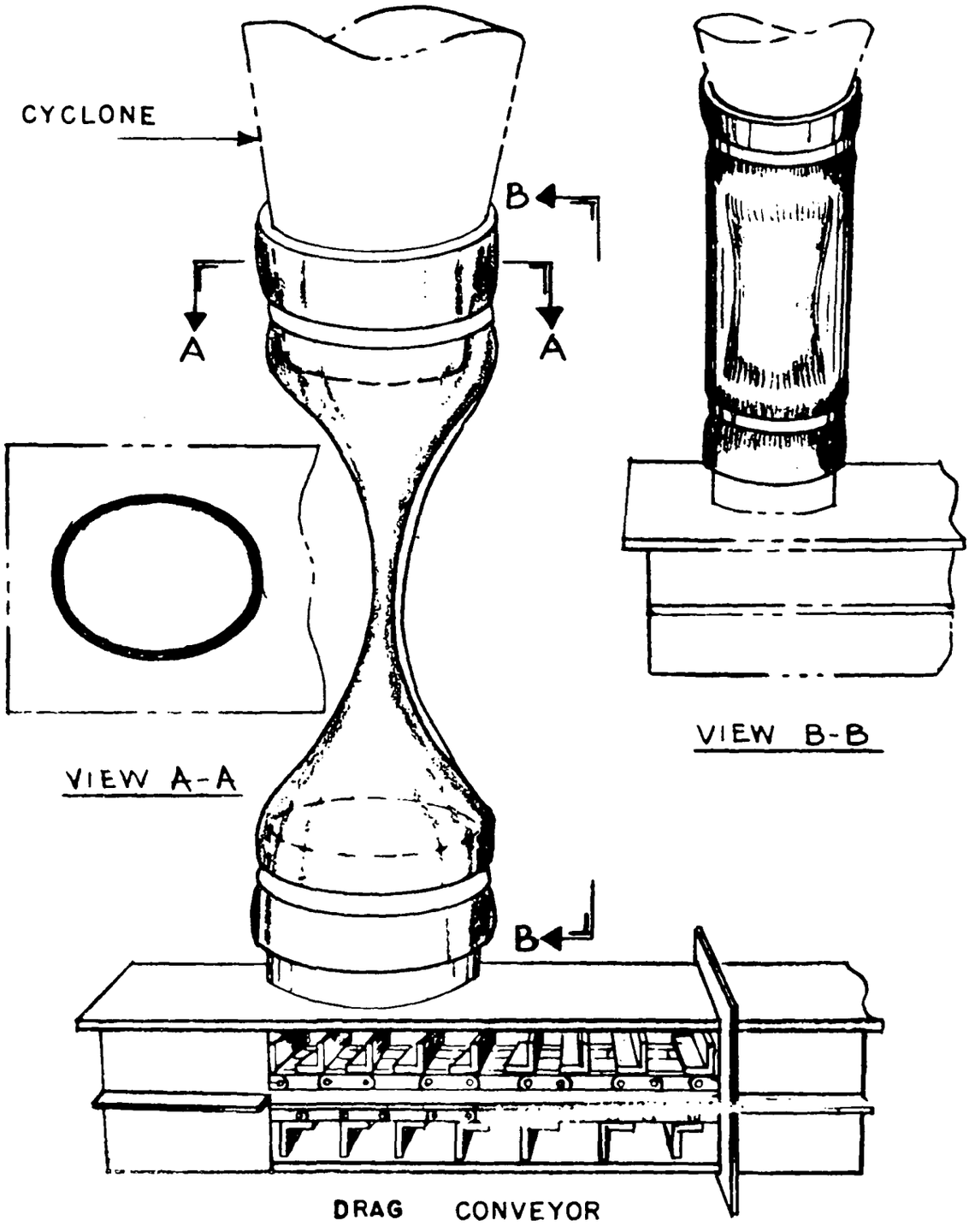

Figure 31. Dust-tight cyclone closure, molded rubber seal[26]

baghouse, or a combination of devices. Due to the diversity of the industry, however, no data are available on the distribution of these control devices.

Wet scrubbers are used to control gaseous ammonia, chlorine and fluorine, and particulate emissions from the ammoniator-granulator. Plants that do not exceed local state emission standards use only cyclones to collect particulate emissions from the ammoniator-granulator, dryer, and cooler. Occasionally (<10% of the plants) baghouses are used to further remove particulate emissions. Other plants use both cyclones and wet scrubbers, the cyclone exhausts being fed into the wet scrubber. It is estimated that 60% of the ammoniation-granulation plants use either wet scrubber systems or a combination of wet scrubbers and cyclones. Cyclones are used to control particulate emissions at the remaining 40% of the plants.

Various types of wet scrubbers are used at these plants to collect both gaseous and particulate emissions. Wet scrubber designs vary from the medium efficiency (85%) wet scrubbers to the high efficiency (99%) packed bed and venturi scrubbers.

Medium efficiency wet scrubbers are typically (about 40% of the plants with scrubbers) used by the smaller plants ($<45 \times 10^3$ metric tons/yr) primarily because of the higher capital and operating costs of high efficiency collection systems. These wet scrubbers include impingement type (Figure 32) and cyclonic type (Figure 33) devices.

Water or phosphoric acid is used in these devices as the scrubbing solution and the resulting slurry is recycled into the ammoniator-granulator or sold as low grade liquid fertilizer. The pressure drop across these scrubbers ranges

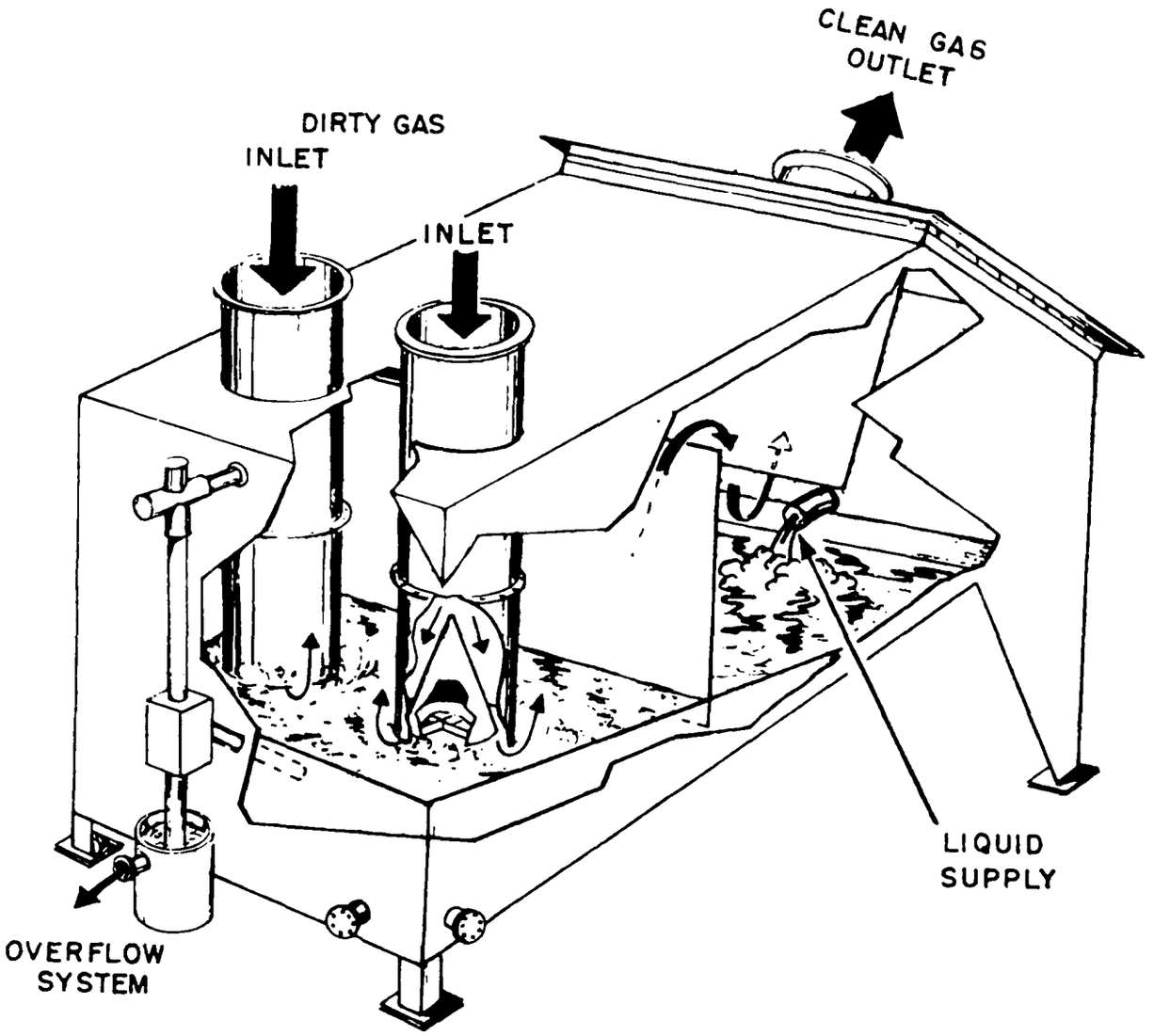

Figure 32. Impingement type scrubber[19]

Reprinted by permission of Modern Plastics Encyclopedia, McGraw-Hill, Inc.

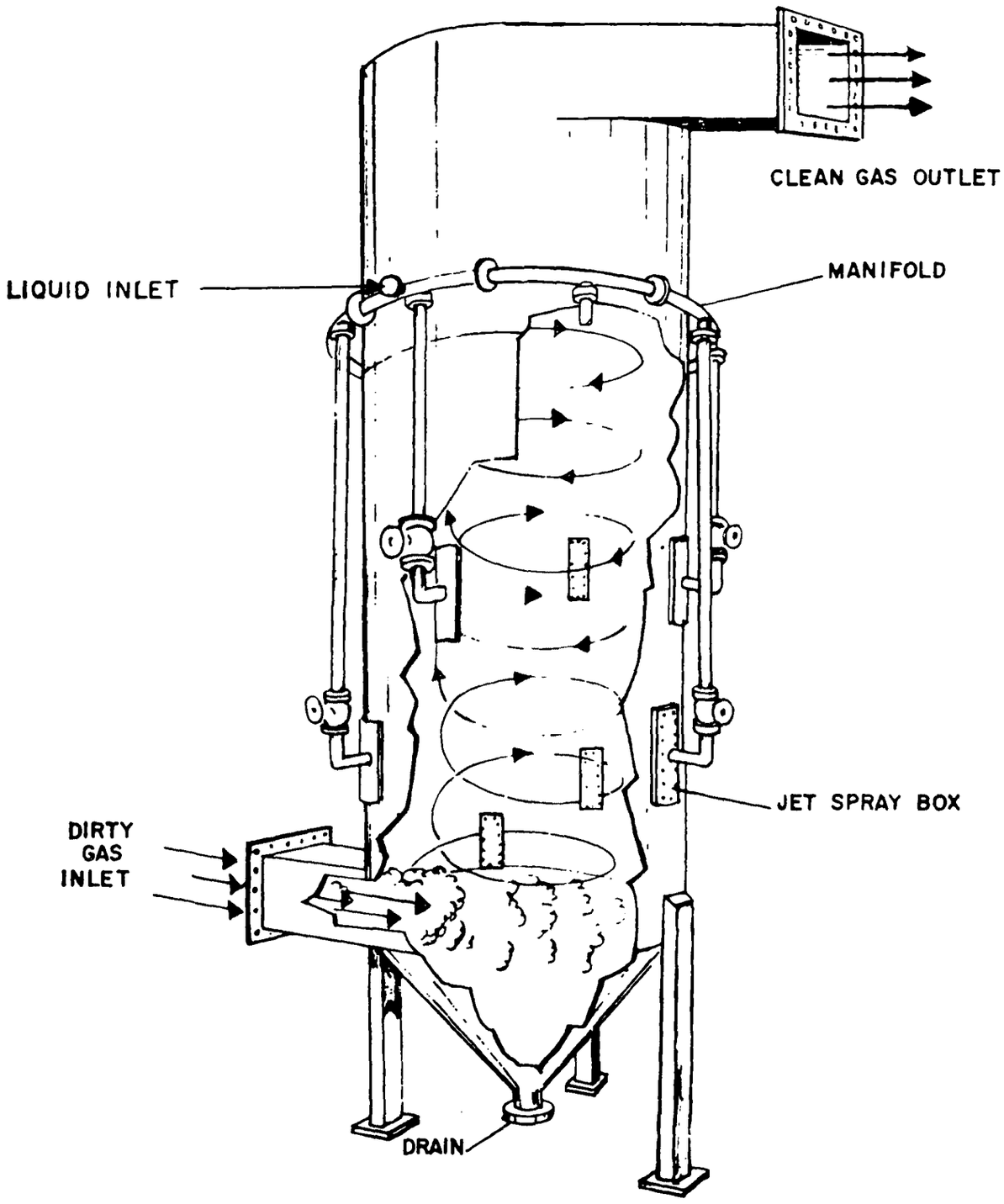

Figure 33. Cyclonic scrubber[19]

Reprinted by permission of Modern Plastics Encyclopedia, McGraw-Hill, Inc.

from 1.24 kPa to 2.5 kPa (5 in. to 10 in. of water). These scrubbers are approximately 85% efficient at collecting ammonia, fluorine, chlorine, phosphorus and particulate emissions.

Higher efficiency wet scrubbers are more common (at about 60% of the plants with scrubbers) at the larger (>45 x 10^3 metric tons/yr) ammoniation-granulation plants because of the economical advantage of collecting ammonia losses and recycling them back into the process. These plants can also better afford the expense of the control devices. Examples of these wet scrubbers include two-stage cyclonic scrubbers (Figure 34), venturi cyclonic scrubbers (Figure 35), and packed bed scrubbers (Figure 36).

The two-stage wet cyclonic scrubbers are relatively simple in design and construction, and have relatively low pressure drop characteristics, 1.24 kPa to 3.7 kPa (5 in. to 15 in. of water). They are capable of collecting approximately >95% by weight of ammonia, particulates and ammonium chloride aerosols greater than 3 μm. These scrubbers are also used as primary collection systems in plants which require both primary and secondary controls.

Packed bed and venturi type scrubbers are much more efficient collection devices than are the wet scrubbers. At a pressure drop ranging from 3.7 kPa to 12.4 kPa (15 in. to 50 in. of water) they can collect greater than 99% of the ammonia, chlorine, fluorine and phosphorus vapors as well as particulates and ammonium chloride aerosols greater than approximately 1.0 μm. The operating parameters for a venturi cyclonic wet scrubber handling the emissions from the ammoniator-granulator at a large plant are shown in Table 33.

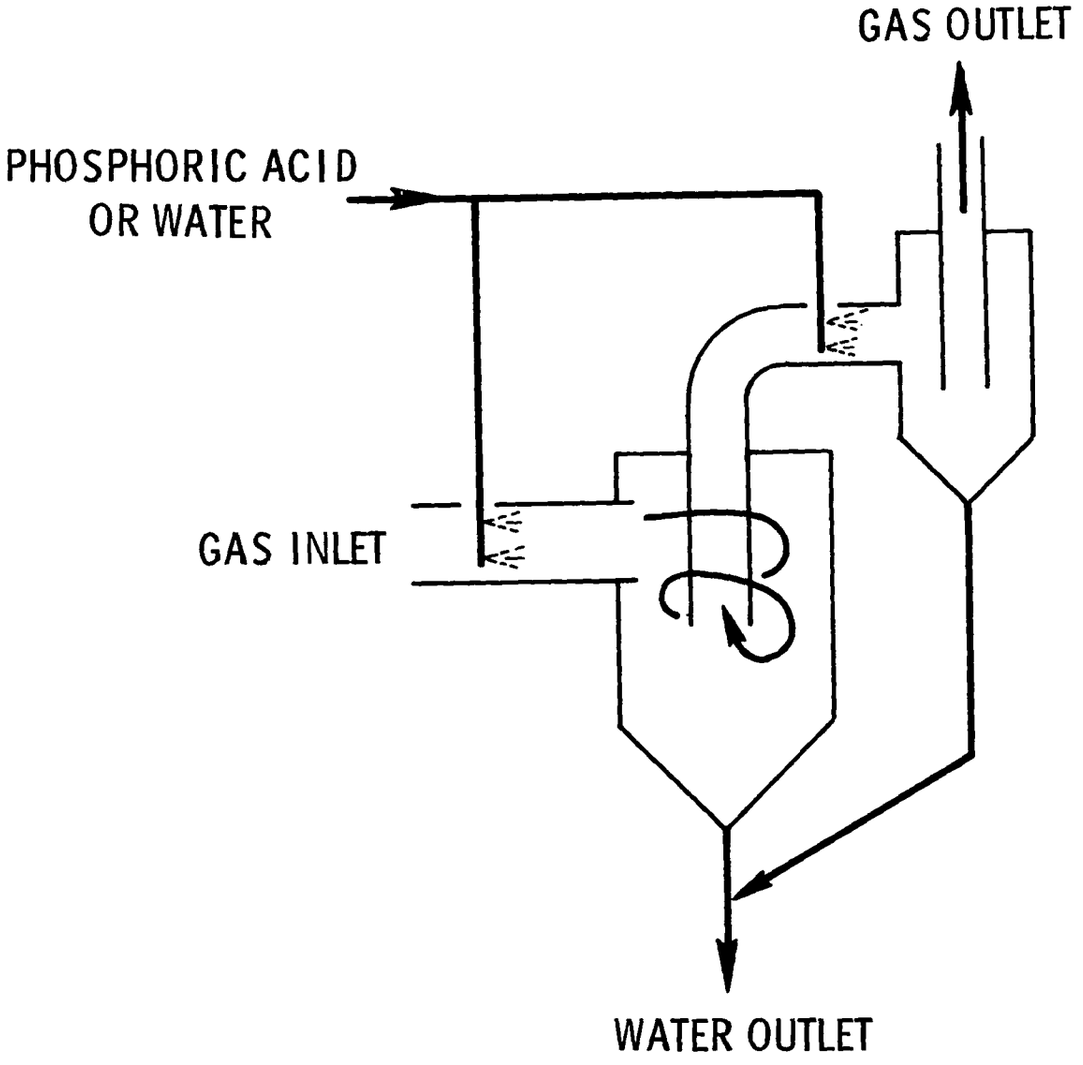

Figure 34. Two-stage cyclonic scrubber

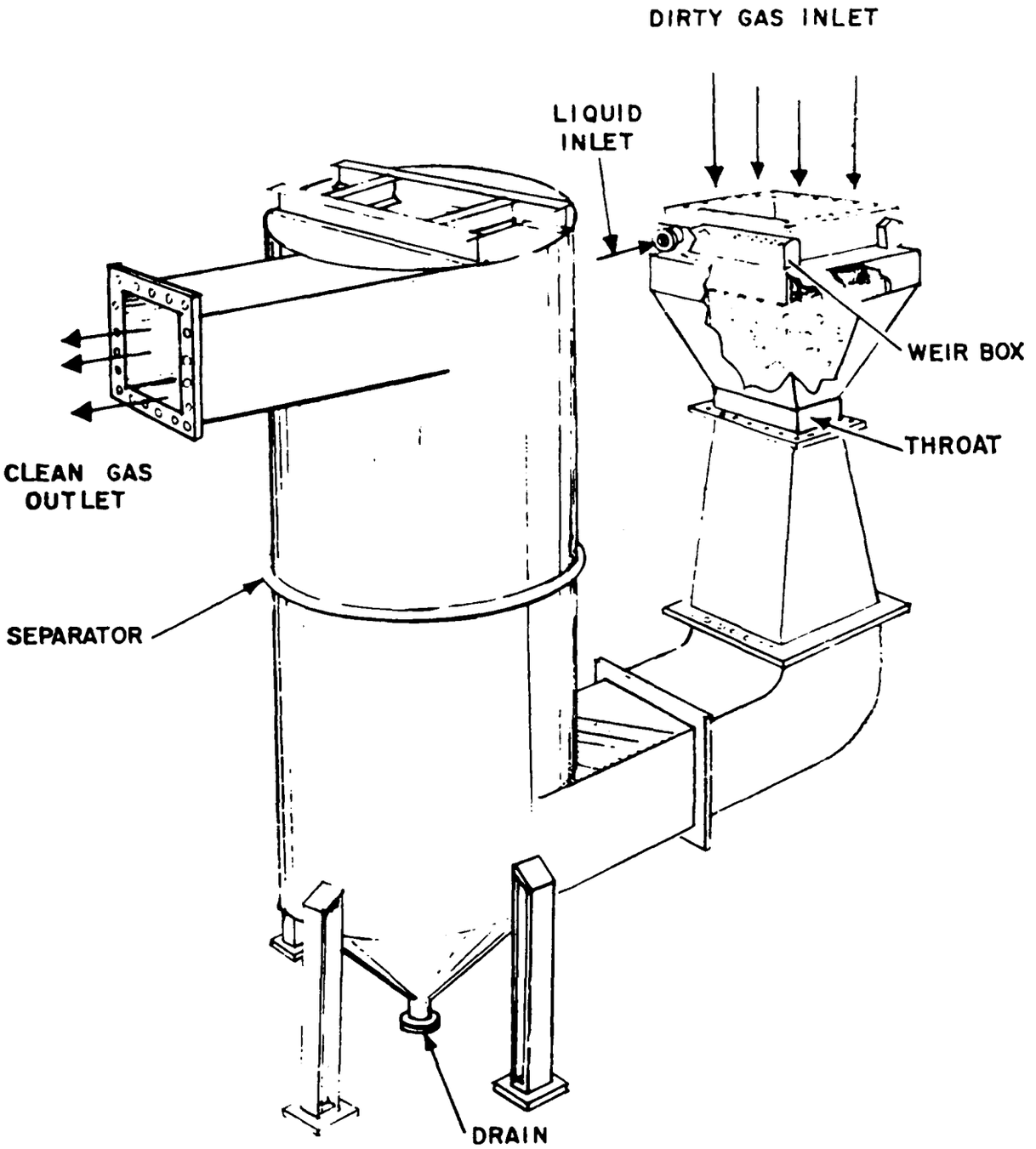

Figure 35. Venturi cyclonic scrubber[19]

Reprinted by permission of Modern Plastics Encyclopedia, McGraw-Hill, Inc.

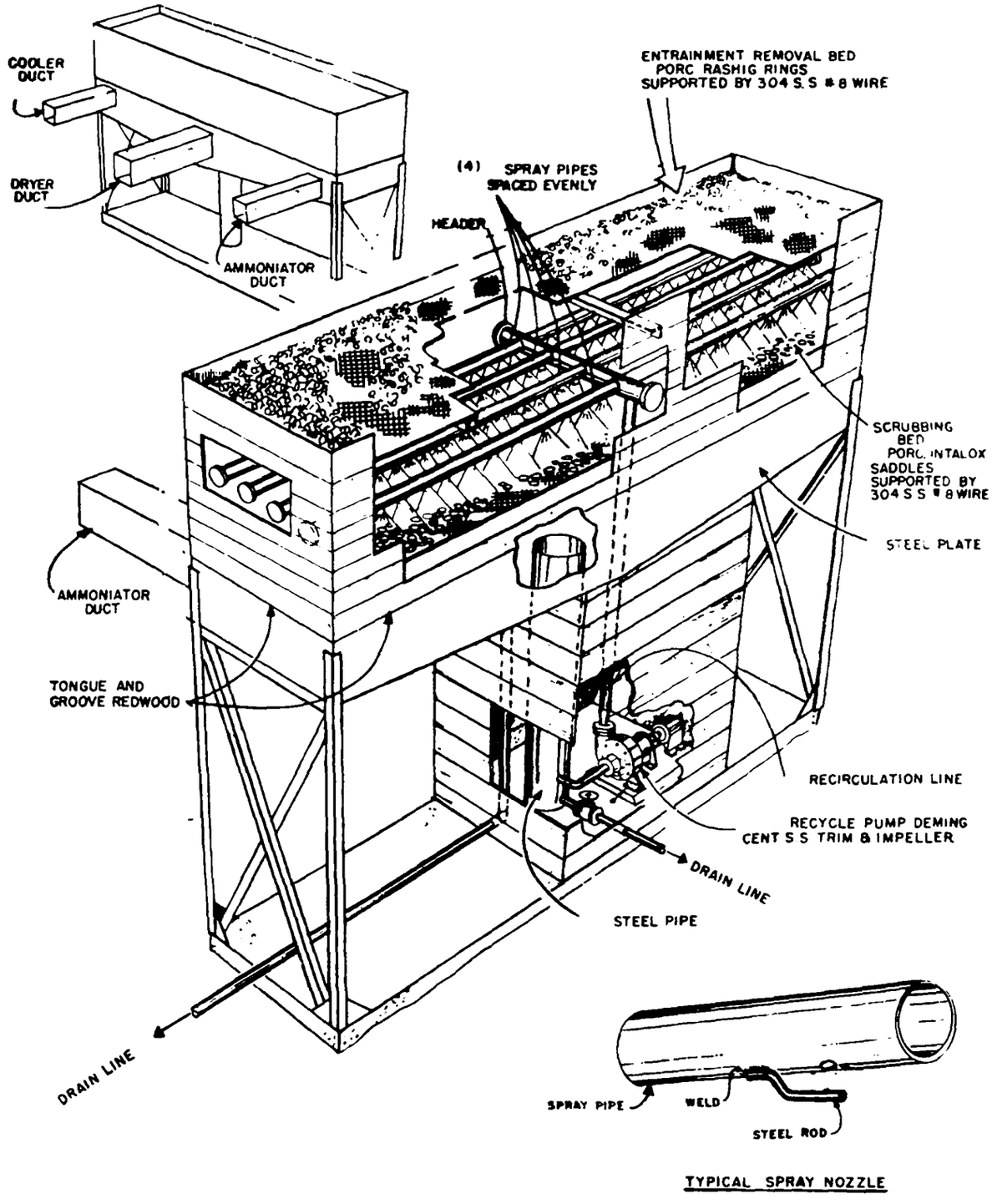

Figure 36. Packed bed scrubber[19]

Reprinted by permission of Modern Plastics Encyclopedia, McGraw-Hill, Inc.

Table 33. OPERATING CONDITIONS FOR A VENTURI CYCLONIC WET SCRUBBER[56]

	Scrubber 1	Scrubber 2
Plant capacity, metric tons/day	900	1,450
Process weight, metric tons/hr	38	61
Gas to scrubber		
Flow, m^3/min	850	1,360
Temperature, °C	82	82
Moisture, vol. %	35	35
Particulate, kg/hr	91	145
Ammonia, kg/hr	152	242
Ammonia, ppm	1,350	1,350
Gas from scrubber		
Flow, m^3/min	850	1,360
Temperature, °C	73	73
Moisture, vol. %	36	36
Particulate, kg/hr	3.6	5.8
Ammonia, kg/hr	1.5	2.4
Ammonia, ppm	13.4	13.4
Particulate efficiency, wt. %	98	98
Ammonia efficiency, wt. %	99	99

The particular disadvantages of the high efficiency collection devices are their high capital and operating costs and large maintenance requirements. The cost of a venturi cyclonic or venturi throat packed bed system can be as high as 50% of the capital cost of the mixing plant.[22] Large maintanance costs are a result of the high pressure drops required coupled with 82°C gases and acidic solutions.

The Industrial Gas Cleaning Institute has computed the costs for high efficiency wet scrubbers which are applied to emissions from ammoniation-granulation plants.[56] The data input and results of their 1973 survey are shown in Appendix H.

[56]Air Pollution Control Technology and Costs in Seven Selected Areas, Phase I (Phosphate Industry). Prepared by Industrial Gas Cleaning Institute, Washington, for the U.S. Environmental Protection Agency. March 1973. 200 p.

The collector plus auxiliary equipment cost for two-stage cyclonic scrubbers ranges from $50,000 to $115,000; for venturi cyclonic scrubbers, from $40,000 to $115,000; and for packed bed scrubbers, from $20,000 to $90,000. The values vary depending on the gas flow rate, which ranges from 280 to 1,700 m^3/min.

Baghouses are occasionally (<20 plants) used at ammoniation-granulation plants to remove particulate emissions from various sources in the plant. Their relatively high capital cost, which can be as high as 50% of the total plant investment, prevents many plants from installing baghouses.

Many types of bag filters are applicable to ammoniation-granulation plants (Table 34). Since the exhaust gas temperatures are below 104°C, temperature requirements of the bag filter pose little problem in material selection. The most important selection criterion is chemical resistance. Due to the chlorine in the emissions, the bags must be acid resistant. Therefore, cotton and nylon bags cannot be used in these plants.

A major problem associated with baghouses is the necessity to maintain the temperatures in the baghouse above the dew point to prevent moisture condensation, which causes caking on the filters.[9] This problem is especially prevalent at ammoniation-granulation plants because of the high (30% to 50%) moisture content of the exhaust gases from the dryer.

B. BULK BLENDING PLANTS

1. Process Modifications

Particulate emissions at bulk blending plants are fugitive in nature and result from materials handling and transfer

Table 34. CHARACTERISTICS OF VARIOUS BAG FILTERS

Fabric	Maximum operating temperature, °C	Mechanical resistance to abrasion	Chemical resistance to		
			Acid	Alkali	Solvents
Acrylic	121	Fair	Good	Fair	Excellent
Dacron®	135	Good to excellent	Excellent	Good	Excellent
Glass	288	Poor	Good	Good	Excellent
Polypropylene	93	Excellent	Excellent	Excellent	Good
Nomex®	218	Excellent	Good	Good	Excellent
Orlon®	135	Good	Excellent	Fair	Excellent
Teflon®	218	Fair	Excellent	Excellent	Excellent

operations in the blending plant building. The fugitive building emissions that escape through doors and windows can be lowered by reducing the amount of emissions inside the building. One method is to apply dust depressing agents such as water, liquid fertilizer (11-37-0), and motor oil to the raw material and mixed fertilizer. Approximately 5% of the bulk blend plants use this control method. Experts at TVA conducted air sampling tests around the mixer and bagging machine at a bulk blending plant to determine the effect of adding 10-34-0 to the fertilizer as a dust depressant.[26] The results of the test, given in Table 35, show that addition of 1% of 10-34-0 reduced dust discharges from the mixer to 12 mg/m^3 from 25 mg/m^3, and those from the bagging machines to 11 mg/m^3 from 282 mg/m^3.

A sprayer bar installed in the rotary-drum mixer, as shown in Figure 37, has been suggested by personnel at TVA as a means of applying the binding agent to the fertilizer. A simpler technique is to hand spray the mixed fertilizer as it flows from the mixer to the bagging machine or elevator. This hand spraying method can be used to spray the raw materials before entry into the rotary mixer to reduce dust emissions in other areas of the building.

Lightweight oils and used motor oils can also be utilized as dust depressing agents. However, the application of oil to any fertilizer mixture containing more than 60% ammonium nitrate is not recommended because of the potential explosion hazard. Spraying 4 kg to 9 kg of lightweight oil per megagram of diammonium phosphate fertilizer has been reported to reduce fugitive dust emissions to 10 mg/m^3 around the mixer.[26]

Table 35. EFFECT OF 10-34-0 IN DEPRESSING DUST IN BULK BLEND PLANT[26]

Sample point	Sample no.	10-34-0, g/kg	Air sampled, m^3	Dust concentration	
				Per sample, mg/m^3	Per test,[a] mg/m^3
Mixer[b]	1	5.8	7.9	15	19
Mixer	2	5.8	8.1	23	
Mixer	1	11.5	7.9	10	12
Mixer	2	11.5	9.7	13	
Mixer	1	None	8.6	24	25
Mixer	2	None	7.9	20	
Mixer	3	None	8.1	32	
Bagger[c]	1	10.0[d]	12.5	11[e]	11
Bagger	1	None	8.9	228	282
Bagger	2	None	9.8	278	
Bagger	3	None	8.8	340	

[a]Average of dust concentration of samples.

[b]Mixer samples obtained 2.4 m horizontally and 0.6 m vertically upward from mixer discharge door.

[c]Bagger samples obtained 2.4 m horizontally and 0.6 m vertically downward from bagging machine operator platform.

[d]Weighted average of conditioner applied during Tests 1 and 2.

[e]Considerably less dust falling off overhead conveyor belt into air during this test.

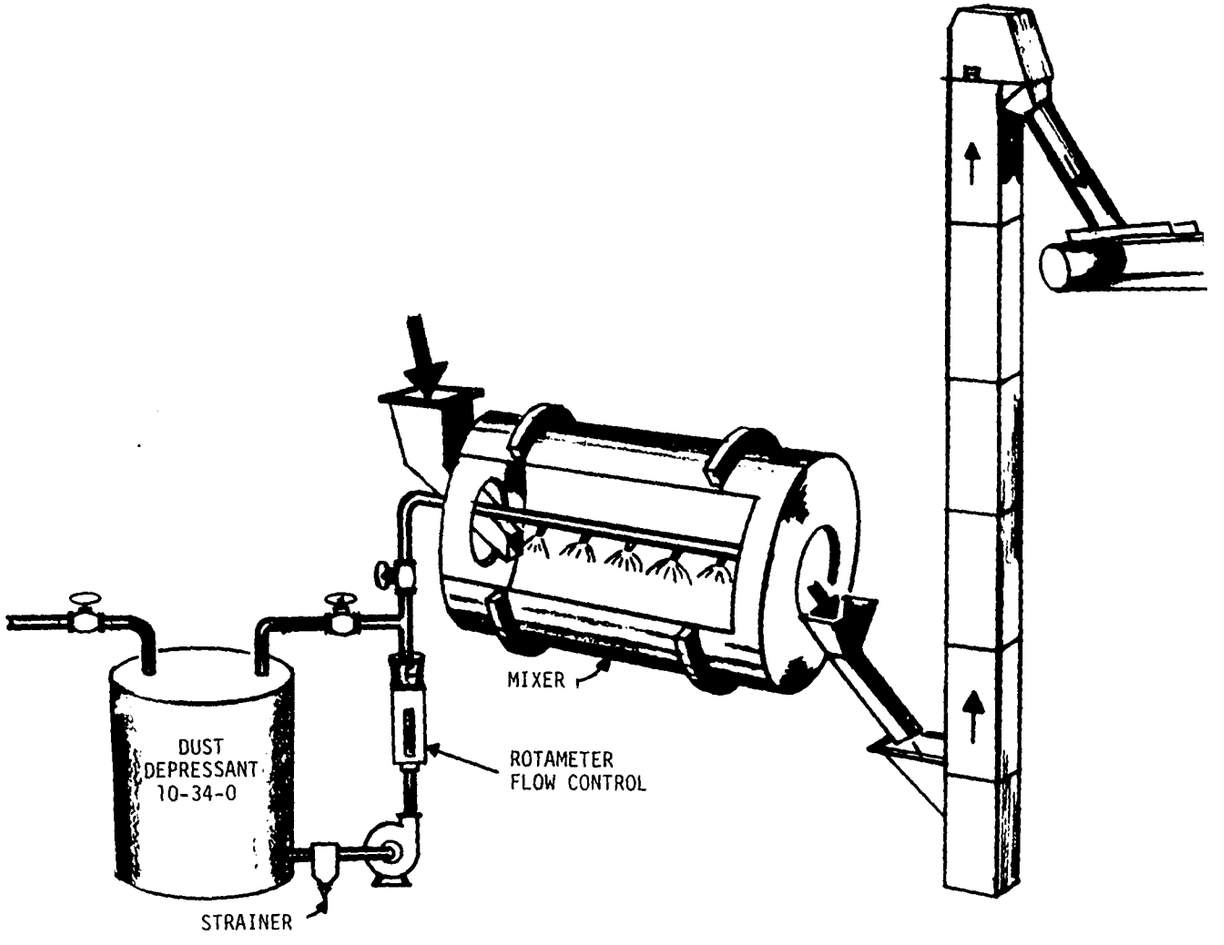

Figure 37. Dust depressant application system

2. Pollution Control Devices

The majority (99%) of the bulk blend plants do not use any pollution control equipment because their emissions are below local state emission standards. The plants that do have control devices are located in conjunction with ammoniation-granulation plants and their emissions are jointly controlled. Dry cyclones and baghouses are used to collect the particulate emissions in these instances. Some bulk blend operators have put skirts around the railroad cars to reduce fugitive dust emissions when the cars are being unloaded.

Engineers at the fertilizer division of TVA have designed systems to control particulate emissions at bulk blending plants in case they are required. Most of their solutions relate to the materials handling and conveying operations.

One suggestion is to avoid the use of pneumatic conveying equipment unless the granular materials are treated with a dedusting agent or effective collectors are provided to remove dust from the discharged air. Inclined screw conveyors are recommended to convey materials from hopper-bottom railroad cars to a shuttle conveyor for distribution into storage bins. Telescoping chutes can be used to discharge the material into the bins without causing excessive dust emissions. This system is illustrated in Figure 38. It is recommended that the inclined screw conveyor be connected to the shuttle conveyor by a flexible sock arrangement.[27]

An alternate system for transferring raw materials from railroad cars to storage bins is illustrated in Figure 39. The material is transferred into the storage bins through a

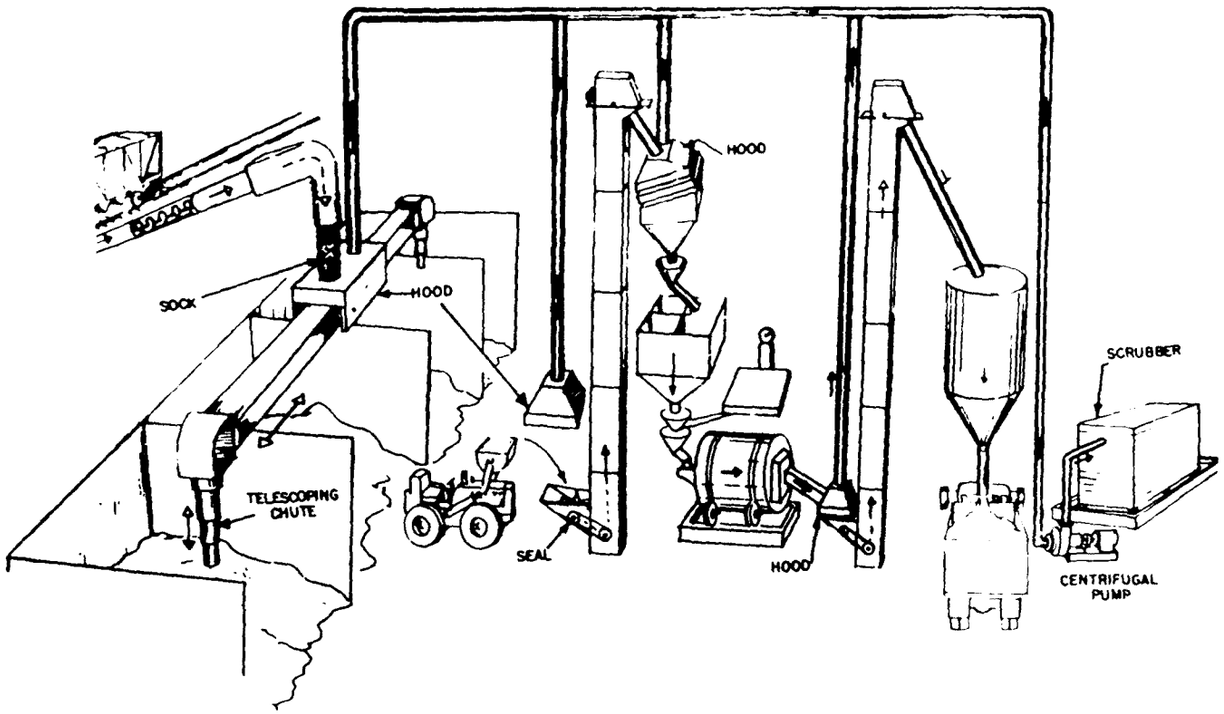

Figure 38. Bulk blend plant equipped with dust controls[23]

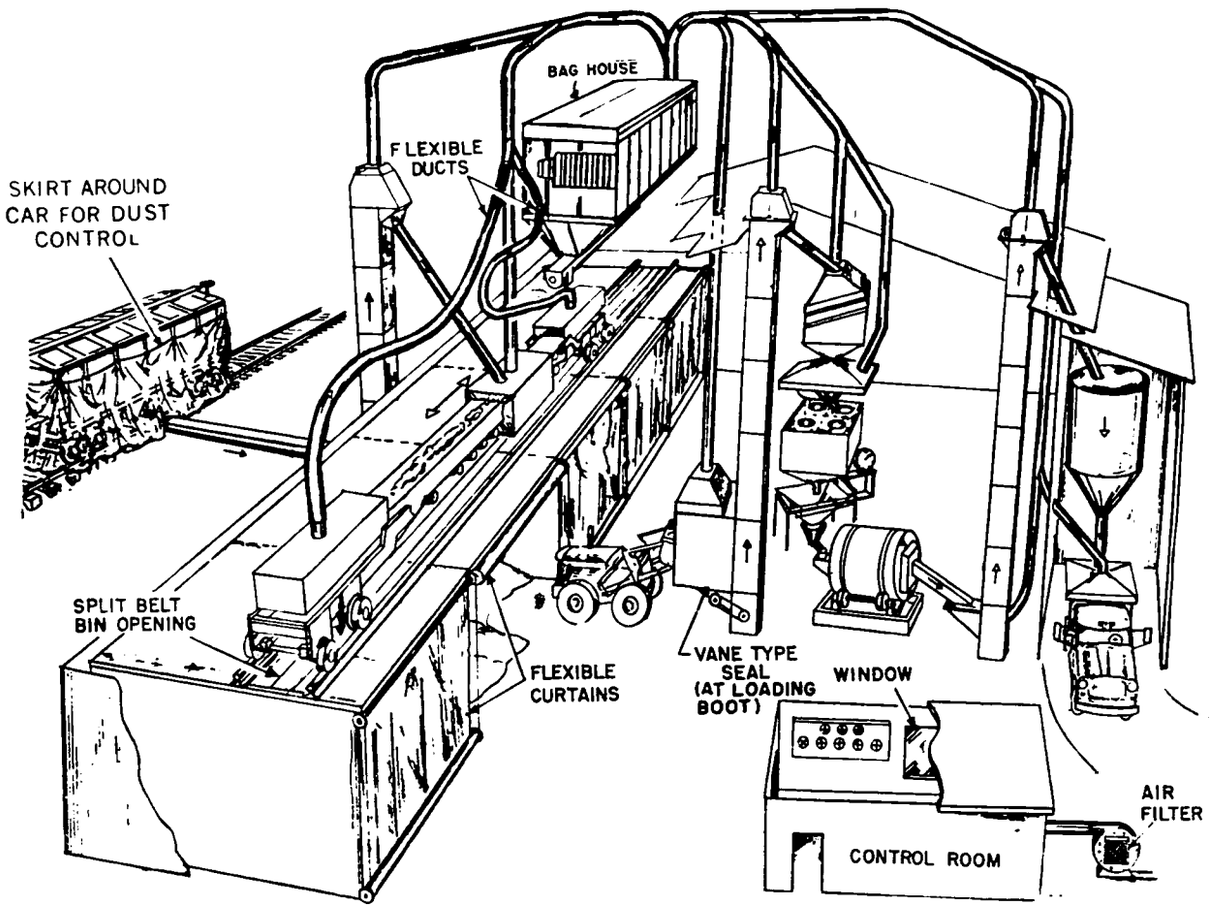

Figure 39. Alternative dust control systems

split belt bin opening arrangement. Openings in the bin are closed by overlapping flexible material, such as belting material. A plow attachment on the shuttle conveyor, shown in Figure 40, is used to separate the flexible material to provide an opening for filling the bin. In addition, flexible curtains or metal doors are recommended on the front of the storage bins to prevent further dust emissions. Materials from the storage bins are removed by a front-end loader which discharges them into an elevator. An exhaust hood should be installed above this elevator boot to feed any dust discharged at this point into the exhaust system. Ventilation rates recommended by the ACGIH for bulk blending equipment are shown in Table 36.[57]

Bucket elevators are another source of particulate emissions at fertilizer blending plants. Centrifugal discharge elevators, shown on the left side of Figure 41, should be replaced with product discharge elevators, shown on the right side of Figure 41. The centrifugal discharge type is usually a high-speed bucket elevator and a considerable amount of material does not empty from its buckets. If the materials are excessively dusty, dust is emitted from the elevator boot. The low-speed product discharge elevator has two strands of chain snubbed back by an idling sprocket and rounding the head sprocket. This arrangement gives an almost complete upturn of the buckets, allowing them to empty completely through the discharge chute. Practically no material showers down to the boot of the elevator. In addition, some companies have found that sealing the boot of the elevator, as shown in Figure 42, eliminates dust emissions.[27]

---

[57]Trayer, D. M. Environmental Control in Bulk Blending Plants. 1. Industrial Hygiene Aspects. In: TVA Fertilizer Conference. Tennessee Valley Authority. Muscle Shoals, Alabama. Bulletin Y-62. August 1973. p. 47-58.

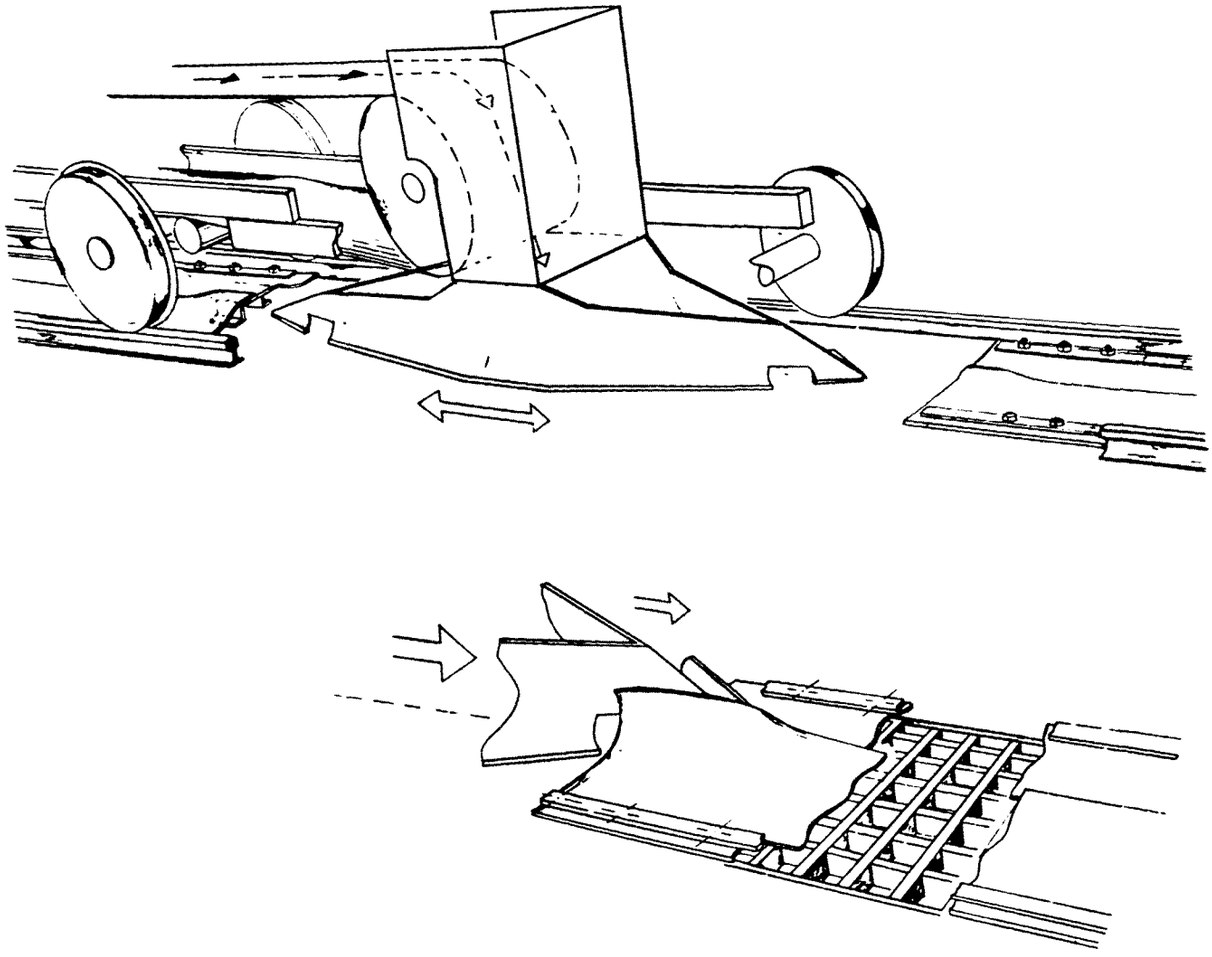

Figure 40. Bin-filling arrangement[27]

Table 36. VENTILATION RATES FOR BULK BLENDING EQUIPMENT[57]

Dust point	Air flow requirements
Mixer	61-91 m^3/min-m^2 of open face area
Bucket elevator	30 m^3/min-m^2 of casing cross section (takeoffs top and bottom for elevators >9 m high)
Conveyor belt transfer	
For belt speed of 61 m/min	33 to 46 m^3/min-m of belt width
For 1.0 m material fall	Add 20-28 m^3/min
For enclosed conveyor	Add 46-61 m/min indraft at all openings
For very dusty materials	1.5 to 2 times stated flow rate
Screens	
Flat deck hood openings	61 m^3/min-m^2 of hood opening (at least 15 m^3/min-m^2 screen area[a])
Cylindrical screens	30 m^3/min-m^2 of circular screen cross section (at least 122 m^3/min-m^2 of enclosure opening)
Hoppers	
Manual loading	46 m^3/min-m^2 of face area
Belt fed	See conveyor belt transfer above (provide at least 61 m^3/min-m^2 opening)
Screw conveyors	61 m^3/min takeoffs on 9 m centers
Bag filling	305-457 m^3/min
Bag tube packer	152 m^3/min filling tube 152 m^3/min at feed hopper 290 m^3/min at spill hopper

[a]TVA has found that 15 m^3/min-m^2 of screen area is sometimes insufficient for good control at screens.

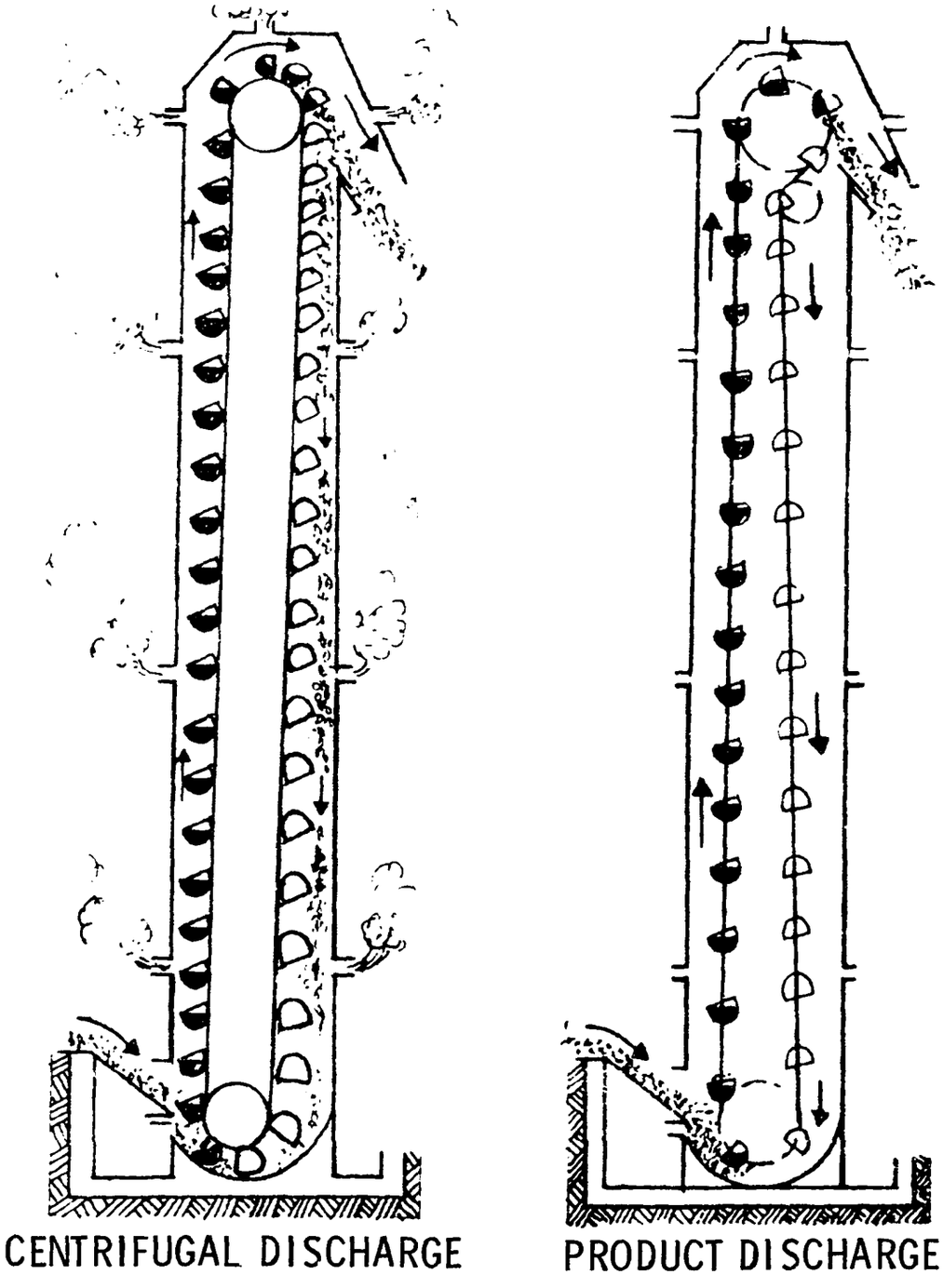

Figure 41. Bucket elevators used in bulk blending plants[26]

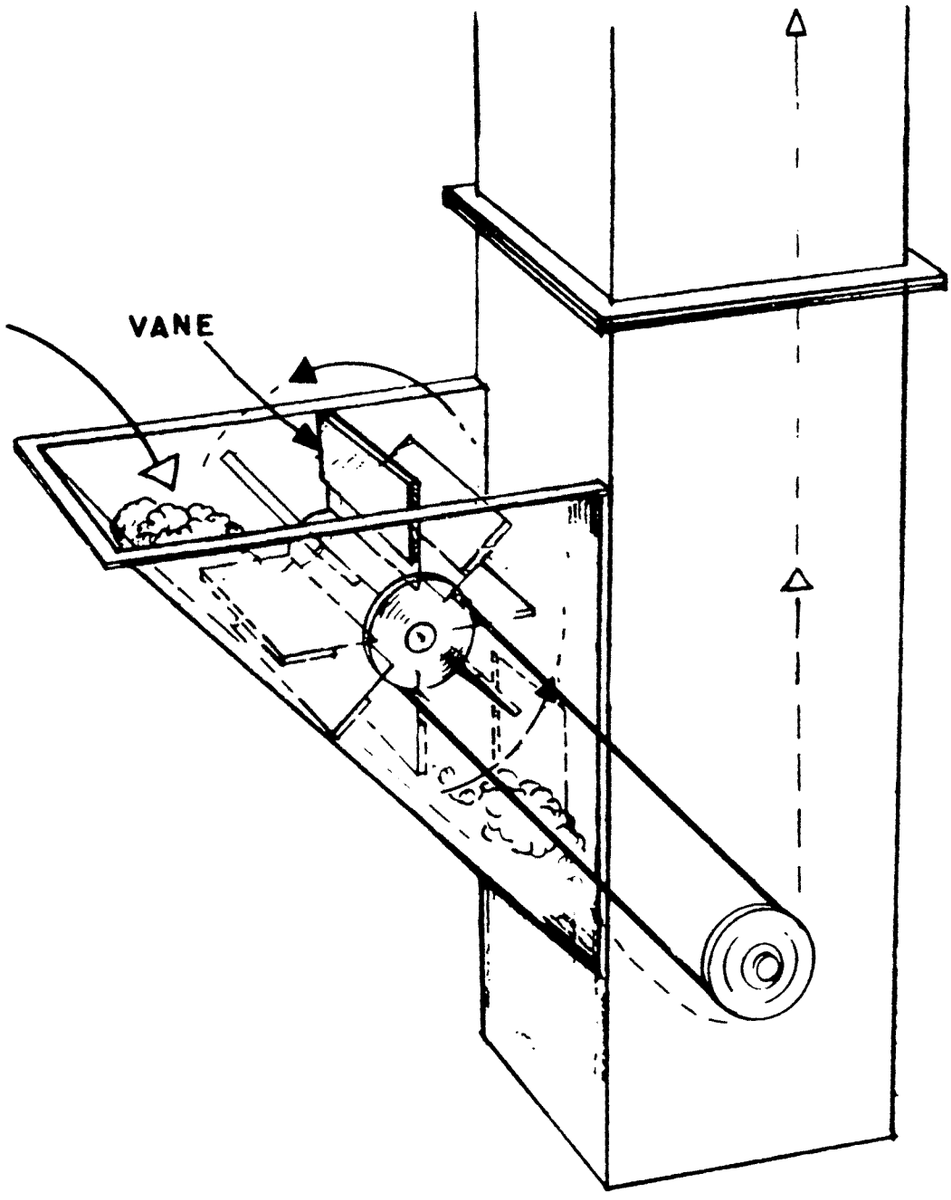

Figure 42. Vane type seal for bucket elevator[23]

C. LIQUID MIX PLANTS

1. Process Modifications

The hot mix pipe reactor process, recently commercialized, eliminates the hot mix reactor tank, thus reducing the amount of possible emissions from hot mix plants. In 1974, there were 100 pipe reactors in operation (at 3.6% of liquid mix plants), and more were planned.[31]

2. Pollution Control Devices

The pipe reactor plants are equipped with wet scrubbers. When a separate mix tank is used, the packed bed wet scrubber is mounted on top of the mix tank. Either water, partially cooled product, or both are used as scrubbing solutions to remove approximately 95% of the ammonia, chlorine, fluorine, particulate and ammonium chloride emissions. A demister is placed on top of the scrubber to further reduce aerosol emissions.

In the tower design pipe reactor plant, the scrubber is an integral part of the tower. The packed bed scrubber acts not only to reduce air emissions, but serves as the cooling section. The packed bed scrubber-cooler and the demister unit on top of the tower collect approximately 95% to 99% of all emission species.

Few fluid fertilizer producers using the open tank technique have received complaints concerning ammonia emissions from their plants.[19] The installation of a hood system and packed bed wet scrubber, such as shown in Figure 43, has been used to control these emissions. Exhaust gases from the hot mix open tank reactor and from the liquid storage tanks are

blown into the bottom of a packed bed tower by exhaust fans. Phosphoric acid or water is sprayed onto the packing of the tower and is usually recirculated until it has a nitrogen content of about 3% to 4% and a P_2O_5 content of about 16%. This partially neutralized phosphoric acid solution is used to produce liquid mixtures.

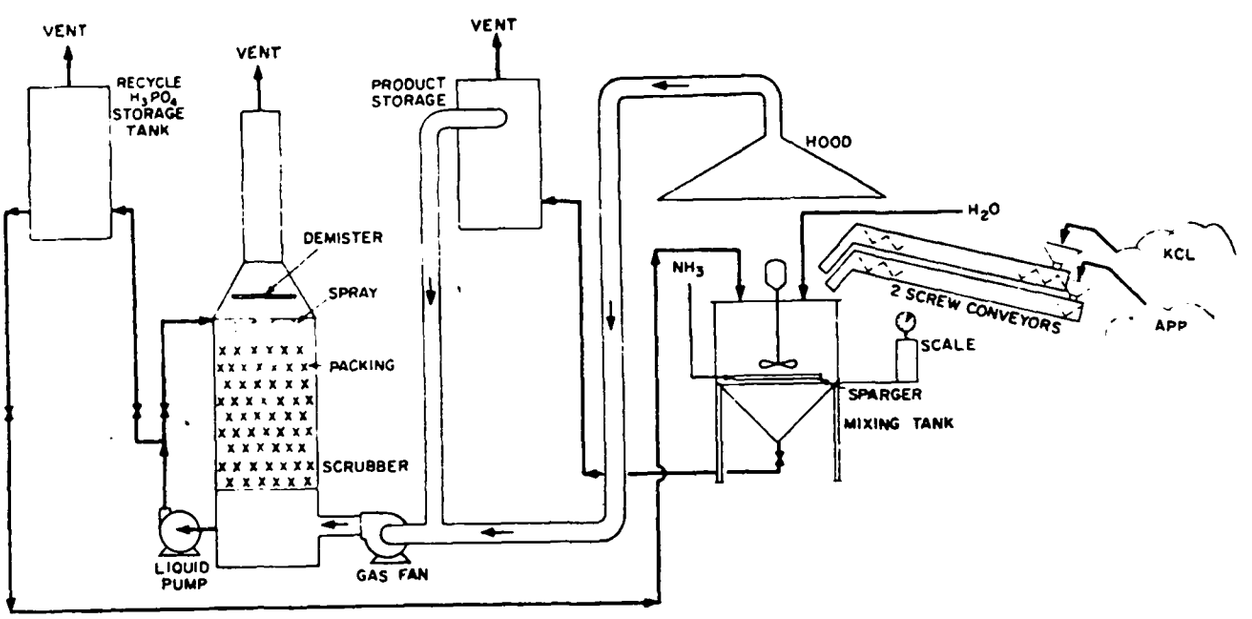

Figure 43. Suggested fume scrubbing system for fluid plant

Reprinted by permission of Modern Plastics Encyclopedia, McGraw-Hill, Inc.

SECTION VI

GROWTH AND NATURE OF THE INDUSTRY

Fertilizer consumption in the U.S. in 1973 was 39.1 x 10^6 metric tons, an increase of 4% above the 37.4 x 10^6 metric tons consumed during 1972. Consumption of mixed fertilizers containing two or all three primary plant nutrients accounted for 52% (20.3 x 10^6 metric tons) of the total, an increase of 4% over the preceding year. The past and expected future growth in the fertilizer industry is shown in Figure 44.[58]

Of the 20.3 x 10^6 metric tons of mixed fertilizers consumed, ammoniation-granulation plants produced 45%, bulk blending plants produced 32%, and liquid mix plants produced 23%. Figure 45 shows the mixed fertilizer market split among these three types of mixing plants since 1962.

In 1973, there were approximately 195 ammoniation-granulation plants, 5,640 bulk blend plants, and 2,678 liquid mix plants. The number of plants is not expected to increase by more than 6% over the next 4 years. The existing plants are expected to increase their capacities before they increase in numbers. As more compatible means are found for applying herbicides to fertilizers and this type of product becomes accepted by farmers, the number of liquid mix and bulk blending plants will increase.

---

[58]Wheeler, E. M. Marketing Trends. In: TVA Fertilizer Conference. Tennessee Valley Authority. Muscle Shoals, Alabama. Bulletin Y-78. August 1974. p. 88-91.

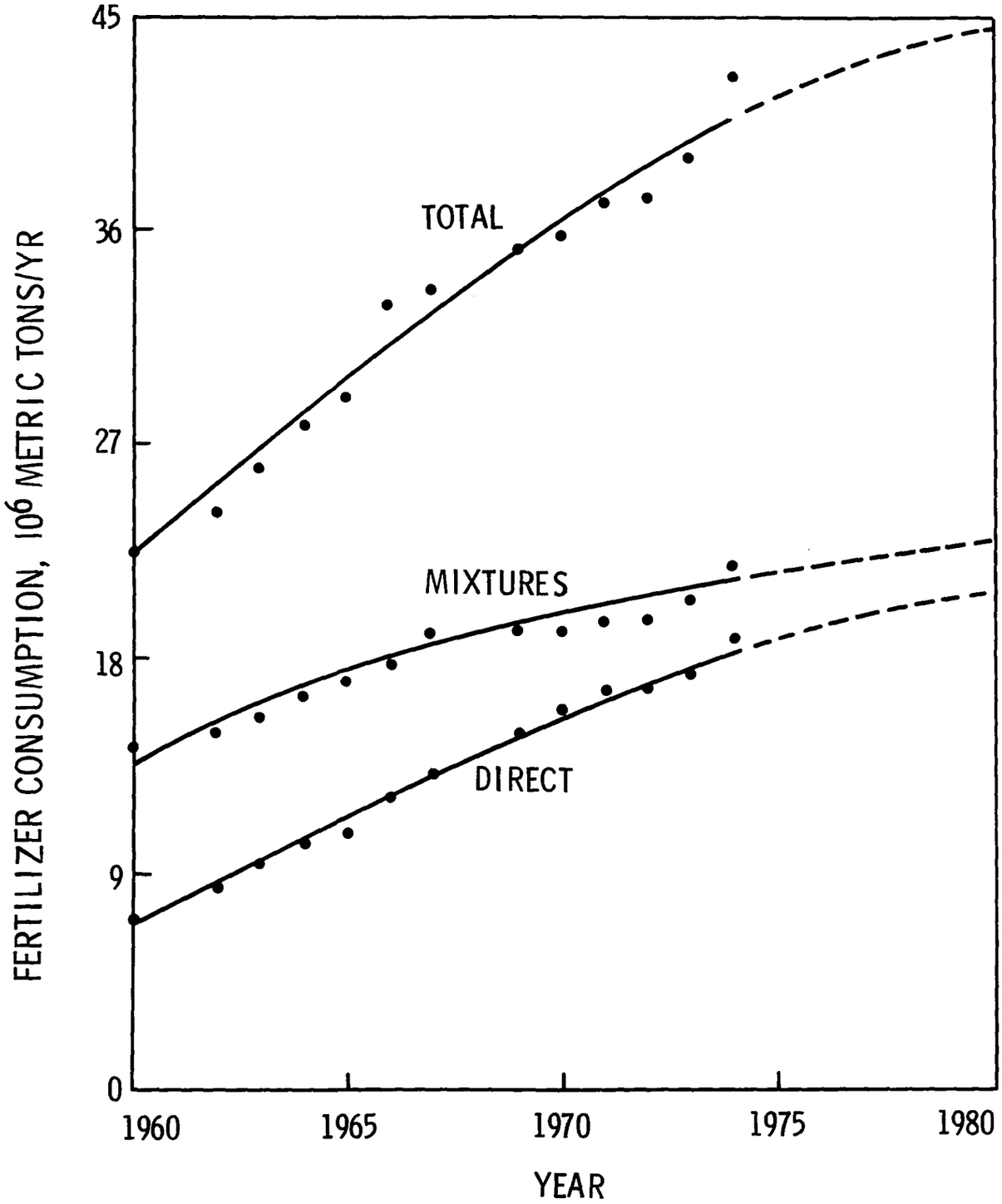

Figure 44. Fertilizer consumption from 1960 to 1980

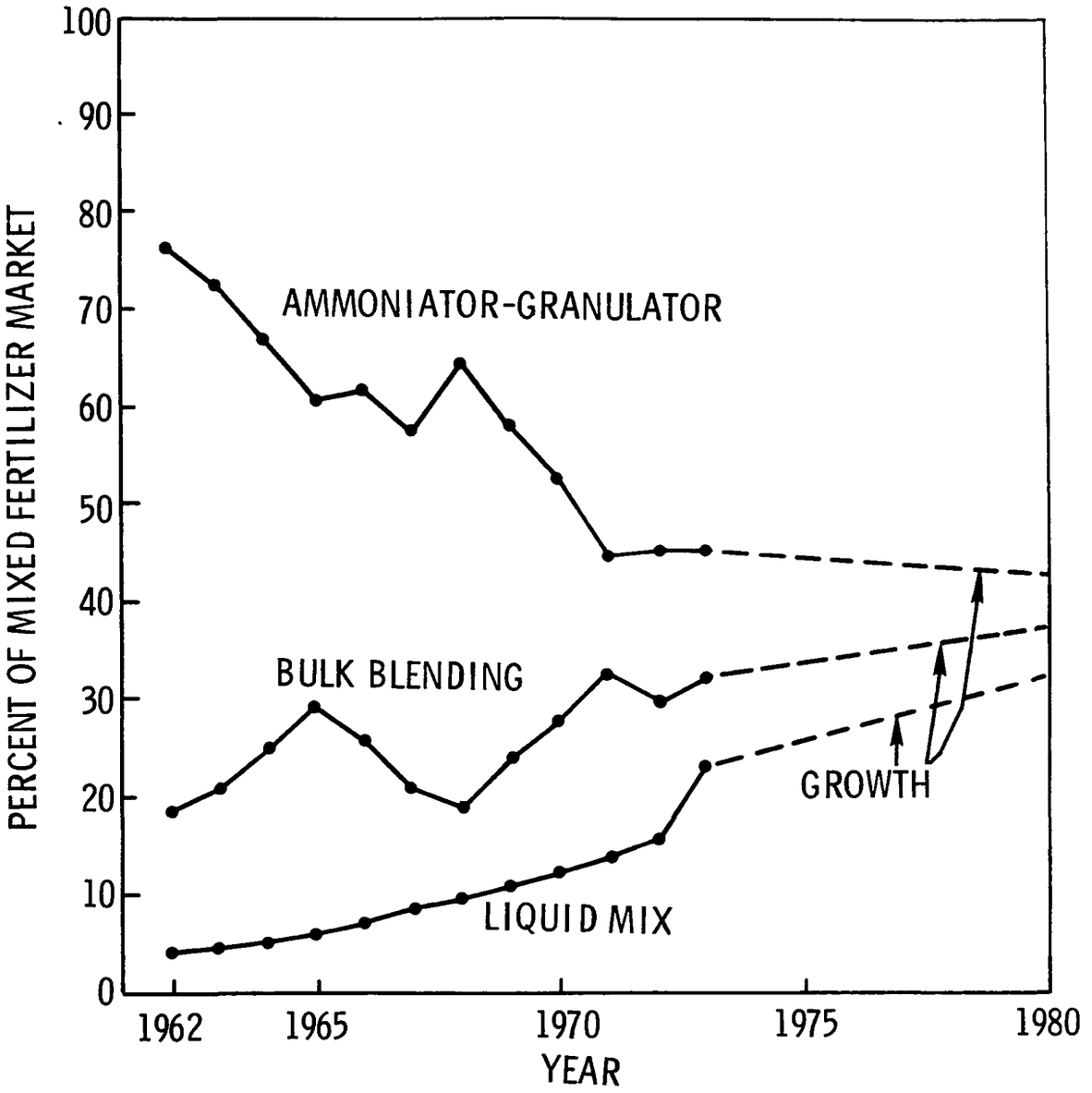

Figure 45. Portion of the mixed fertilizer market shared by the three types of mixing plants[5]

Forecasts for the supply and demand of nitrogen, P_2O_5, and potash are shown in Figures 46, 47, and 48, respectively.[5] On the supply side, nitrogen-fertilizer and ammonia producers are plagued by continuing problems in getting enough natural gas feedstock. While the lack of natural gas is an immediate short-term (3 years) crisis, it could turn into a major long-term problem depending on the policies established by the federal government to solve the nation's energy supply problem. Additionally, if all the nitrogen plants slated for construction are built, there could be an overcapacity by 1978 or 1979.[5]

Supplies of potash are also being reduced because new and higher tax regulations on potash are being imposed by Canada, the major supplying country. The province of Saskatchewan has instituted a "reserve tax" on potash, designed to discourage excessive exploitation of resources. The problem is that as the price of potash increases, so does the tax rate.[59]

Phosphate fertilizer producers are the least concerned about the supply of raw materials. While the price of phosphate rock is increasing, there seems to be a plentiful supply. With new plants coming onstream, supply and demand should be in balance in 1975, and will continue that way into the 1977-1978 crop year.

Fertilizer demand is still outstripping supply, but at a slower pace. Lower cattle prices and a depressed citrus market in Florida and Texas are causing farmers to purchase less fertilizer. Also, the depressed textile market is

---

[59]Koepke, W. E. Future Potash Supply. In: TVA Fertilizer Conference. Tennessee Valley Authority. Muscle Shoals, Alabama. Bulletin Y-78. August 1974. p. 27-34.

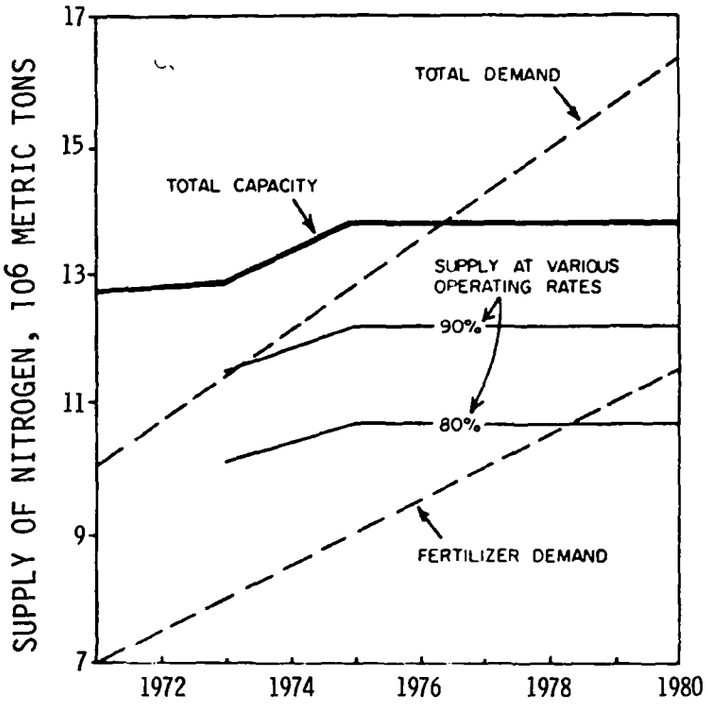

Figure 46. Nitrogen supply forecast for the U.S.[5]

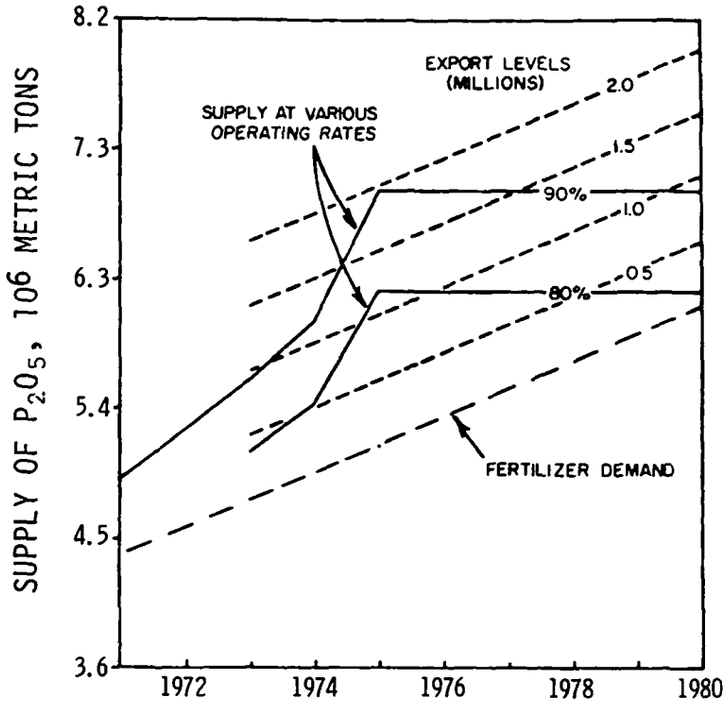

Figure 47. Phosphate supply forecast for the U.S.[5]

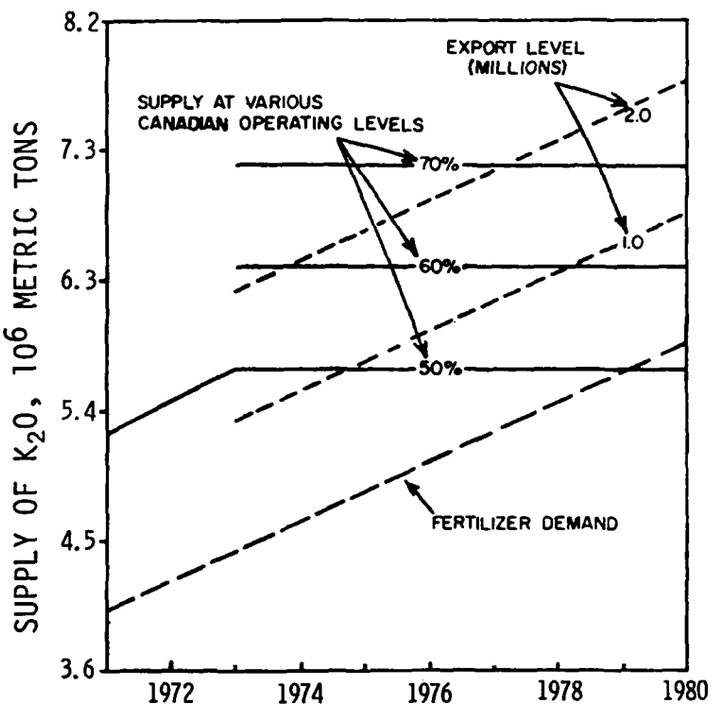

Figure 48. Potash supply forecast for the U.S.[5]

causing farmers to plant less cotton and therefore use less fertilizer.[60]

At ammoniation-granulation plants, urea ammonium phosphate (UAP) is expected to start replacing ammonium nitrates and sulfates, possibly by the late 1970's.[61] UAP is produced by combining ammonia and merchant-grade wet-process phosphoric acid in an ammoniator-granulator. Concentrated urea solution is then added to the melt.

Since fertilizer manufacture accounts for 54% of all sulfuric acid consumption in the U.S., much interest has been shown by the fertilizer industry in SO_2 recovery from coal-fired steam plants.[61] Eventually, the economic burden of SO_2 recovery may be lessened by a closer tie-in to fertilizer production, with the ultimate possibility of sharing process steps. Granulation plants and liquid mixing fertilizer plants may be affected by this process sharing concept.

One trend that seems fairly certain into the 1980's is the growing importance of urea as a straight fertilizer material and for use in mixed and compounded fertilizers.[61] Urea made up about 19% of the world's total nitrogen production in 1967 and 30% in 1973. Use of granular urea in bulk blenders should become increasingly attractive because urea permits delivery of higher nitrogen quantities to the crops using less fertilizer material.

---

[60]Nilsen, J. M. Fertilizer Outlook "Iffy." Chemical Engineering. 82(6):28-29, March 1975.

[61]Nelson, L. B. Trends in Technology. In: TVA Fertilizer Conference. Tennessee Valley Authority. Muscle Shoals, Alabama. Bulletin Y-78. August 1974. p. 92-95.

Sulfur-coated urea, a controlled-release nitrogen product developed by TVA, appears to hold a lot of promise and may come into limited production by the late 1970's. This process involves spraying preheated urea with molten sulfur in a rotating drum. A wax sealant is applied on top of the sulfur coating to seal pinholes and cracks that would affect the controlled release properties. Finally, a coating dust is applied to the product to reduce its stickiness.[61] This material should be useful in bulk blending because of the larger granule sizes and because the sulfur coating prevents undesirable chemical reactions with superphosphate. Compared to uncoated urea, it has greater crushing strength and resistance to abrasion and it is not as hygroscopic.

An important consideration in the future growth of fluid fertilizers is the role of suspensions. About half of the fluid fertilizer producers now make suspensions, which account for about one-third of their total tonnage.[61] A net balance seems to be in favor of liquid mixed suspension fertilizers as compared to clear liquid mixes.

In addition, there seems to be a growing trend toward the use of computers both for management practices and process quality control.[62] Until recently this type of computer network was available only to the largest companies. However, this service is now available to the small fertilizer mixing plants as a result of new remote terminal and computer time-sharing technology. For about $15/hour of actual computer/terminal use, the small mixing plant can rent the full services of a $100 million computer network.[62]

---

[62]Boughner, R. T., and J. L. Nevins. Some Management Trends in the 1980's. In: TVA Fertilizer Conference. Tennessee Valley Authority. Muscle Shoals, Alabama. Bulletin Y-78. August 1974. p. 82-87.

SECTION VII

APPENDIXES

A. Granular Raw Materials Consumed at Fertilizer Mixing Plants in the U.S.

B. Raw Data used to Calculate Emission Factors for Ammoniation-Granulation Plants

C. TLV's for the Raw Materials, Secondary, and Micronutrients used by Fertilizer Mixing Plants

D. Details of Sampling Presurvey at Bulk Blending Plants

E. TLV and LD_{50} Values for Selected Herbicides (Active Ingredients) used at Fertilizer Mixing Plants

F. Data used to Establish Emission Factors for Hot Mix Liquid Mix Fertilizer Plants

G. Mass of Particulate Emissions from Fertilizer Mixing Plants

H. Capital and Operating Cost for High Efficiency Wet Scrubbers

APPENDIX A

GRANULAR RAW MATERIALS CONSUMED AT FERTILIZER MIXING PLANTS IN THE U.S.

Granular raw materials	Grade	Particle size distribution mm	Percent
Normal superphosphate ($<22\%$ P_2O_5)	0-20-0	1 to 4	27
		>4	14
		<1	59
Triple superphosphate ($\geq 40\%$ P_2O_5)	0-46-0	1 to 4	99
		>4	1
Monoammonium phosphate $NH_4H_2PO_4$	11-48-0	1 to 4	93
		>4	1
		<1	6
Diammonium phosphate $(NH_4)_2HPO_4$	18-46-0	1 to 4	100
Ammonium nitrate NH_4NO_3	35.5-0-0	1 to 4	96
		<1	4
Ammonium sulfate $(NH_4)_2SO_4$	21-0-0	1 to 4	93
		<1	7
Urea, prilled NH_2CONH_2	45-0-0	1 to 4	96
		<1	4
Potash K_2O		1 to 3	59
		>3	36
		<1	5
Dried sewage sludge	5.6-6.2-0	1 to 4	3
		0.6 to 1	18
		0.4 to 0.6	13
		0.3 to 0.4	42
		<0.3	24
Crushed limestone $CaCO_3$		1 to 4	88
		<1	12
Dolomite clay		1.0 to 1.7	89
		>1.7	5
		<1.0	6
Sand SiO_2		0.3 to 1.0	95
		>1.0	1
		<0.3	4

APPENDIX B

RAW DATA USED TO CALCULATE EMISSION FACTORS FOR AMMONIATION-GRANULATION PLANTS

Table B-1. PLANT SOURCE TEST DATA

Plant	Production rate	Source of emissions	Uncontrolled emission factor,[a] g/kg (pound/ton)					Controls used and efficiency
			NH_3	Total chlorine	Total fluorine	Total phosphorus	Particulate	
A	22.7 metric tons/hr (25 tons/hr)	Total plant	0.223 (0.446) 0.164 (0.329)		0.00390 (0.00781) 0.00272 (0.00545) 0.00465 (0.00930)	0.0062 (0.0124) 0.0011 (0.0022) 0.0215 (0.0430)	0.223 (0.446) 0.52 (1.05)	Cyclonic scrubber and venturi scrubber, 99%
B	680 metric tons/day (750 tons/day)	Dryer and cooler			0.0023 (0.0046) 0.0027 (0.0054) 0.0002 (0.0005) 0.0028 (0.0057)			Cyclone, 80%
		Total plant			0.0080 (0.0161) 0.0127 (0.0255) 0.0059 (0.0119) 0.0080 (0.0161) 0.0061 (0.0123)			Wet scrubber, 85%
C	Unknown	Dryer			0.0015-0.008 (0.003 -0.017)		0.39 (0.77) 0.25-0.5 (0.5 -1.0)	Cyclone
		Cooler			0.015 -0.025 (0.029 -0.05)		0.47 (0.93) 0.21-0.44) (0.42-0.87)	Cyclone
		Total plant			0.001 -0.004 (0.003 -0.008)		0.34 (0.68) 0.27-0.51 (0.54-1.02)	Wet scrubber, 90%

[a]Individual emission factor entries represent separate samples taken.

Table B-1 (continued). PLANT SOURCE TEST DATA

Plant	Production rate	Source of emissions	Uncontrolled emission factor,[a] g/kg (pound/ton)					Controls used and efficiency
			NH_3	Total chlorine	Total fluorine	Total phosphorus	Particulate	
D	Unknown	Ammoniator-granulator	0.58 (1.15)					Wet scrubber
		Dryer	0.18 (0.37)					Wet scrubber
			0.07 (0.14)					
			0.06 (0.13)					
		Cooler	0.092 (0.185)					Wet scrubber
			0.087 (0.175)					
			0.167 (0.335)					
		Total plant	0.07 (0.15)					Wet scrubber, 90%
			0.25 (0.50)					
E	Unknown	Ammoniator-granulator	0.15 (0.30)		0.0027 (0.0055)			Cyclone and wet scrubber, 99%
			0.07 (0.15)		0.0013 (0.0026)			
			0.07 (0.15)		0.0013 (0.0026)			
		Dryer	0.15 (0.30)		0.022 (0.0440)			
			0.26 (0.53)		0.0096 (0.0193)			
			0.19 (0.38)		0.0027 (0.0055)			
		Total plant	0.04 (0.08)		0.0069 (0.0138)			
			0.04 (0.08)		0.0041 (0.0083)			
			0.04 (0.08)		0.0027 (0.0055)			

[a]Individual emission factor entries represent separate samples taken.

Table B-1 (continued). PLANT SOURCE TEST DATA

Plant	Production rate	Source of emissions	Uncontrolled emission factor,[a] g/kg (pound/ton)					Controls used and efficiency
			NH_3	Total chlorine	Total fluorine	Total phosphorus	Particulate	
F	Unknown	Total plant	0.15 (0.30)		0.0025 (0.005)		0.036 (0.073) 0.031 (0.062) 0.094 (0.188)	Cyclone and venturi scrubber, 99%
G	21 metric tons/hr (23 tons/hr)	Ammoniator-granulator	3.37 (6.74) 2.50 (5.00) 3.37 (6.74) 0.19 (0.39)	0.0196 (0.0391) 0.0805 (0.1609) 0.0174 (0.0348) 0.0021 (0.0043)	<0.001 (<0.002) 0.002 (0.003) <0.0009 (<0.0017) 0.0002 (0.0004)	0.0009 (0.0019) 0.0009 (0.0019) 0.0019 (0.0038) 0.0006 (0.0011)		Wet scrubber, 85%
		Total plant	1.37 (2.73) 2.37 (4.74) 0.54 (1.09)	0.035 (0.070) 0.078 (0.156) 0.018 (0.036)	0.002 (0.004) 0.004 (0.008) 0.0018 (0.0035)	0.1135 (0.2271) 0.0371 (0.0742) 0.0170 (0.0341)		
H	13.5 metric tons/hr (15 tons/hr)	Ammoniator-granulator	0.85 (1.7) 1.6 (3.2)				0.13 (0.25) 0.23 (0.45)	Wet scrubber, 90%
		Dryer	0.45 (0.91) 0.63 (1.26) 0.32 (0.64) 0.70 (1.4)				0.09 (0.18) 0.07 (0.13) 0.035 (0.07) 0.1 (0.20)	
		Cooler	0.8 (1.6) 0.13 (0.27) 0.75 (1.5)				2.7 (5.4) 1.9 (3.8) 0.07 (0.13) 0.14 (0.28)	
		Total plant	1.2 (2.4) 3.0 (6.1)				0.23 (0.45) 0.47 (0.93)	

[a]Individual emission factor entries represent separate samples taken.

Table B-2. STATISTICAL ANALYSIS OF EMISSIONS FROM AMMONIATION-GRANULATION PLANTS FOR 95% CONFIDENCE LIMITS

Emission source category	Statistical parameter	Emissions species				
		Ammonia	Total chlorine	Total fluorine	Total phosphorus	Particulate
Materials storage and handling	$\bar{x}$, g/kg	0	0	0	0	0.5[a]
	Precision	N.A.[b]	N.A.	N.A.	N.A.	±300%
Ammoniator-granulator	$\bar{x}$, g/kg	0.503	0.030	0.0013	0.0011	0.175
	n	7	4	7	4	2
	s(x), g/kg	0.564	0.035	0.0008	0.0006	0.070
	$s(\bar{x})$, g/kg	0.213	0.018	0.0003	0.0003	0.049
	$t_{0.05,\ n-1}$	2.477	3.182	2.447	3.182	12.706
	Precision	±104%	±186%	±57%	±87%	±356%
Dryer and cooler	$\bar{x}$, g/kg	0.316	0.028[c]	0.0083	0.0316[c]	0.23
	n	16	N.A.	11	N.A.	12
	s(x), g/kg	0.262	N.A.	0.0086	N.A.	0.173
	$s(\bar{x})$, g/kg	0.065	N.A.	0.0026	N.A.	0.05
	$t_{0.05,\ n-1}$	2.131	N.A.	2.228	N.A.	2.201
	Precision	±44%	±175%	±70%	±133%	±48%
Screen and oversize mill	$\bar{x}$, g/kg	0	0	0	0	0.25[a]
	Precision	N.A.	N.A.	N.A.	N.A.	±300%
Bagging and loading	$\bar{x}$, g/kg	0	0	0	0	0.25[a]
	Precision	N.A.	N.A.	N.A.	N.A.	±300%
Total plant	$\bar{x}$, g/kg	0.819	0.044	0.0096	0.0327	1.40
	n	N.A.	3	N.A.	6	N.A.
	s(x), g/kg	N.A.	0.031	N.A.	0.0415	N.A.
	$s(\bar{x})$, g/kg	N.A.	0.018	N.A.	0.017	N.A.
	$t_{0.05,\ n-1}$	N.A.	4.303	N.A.	2.571	N.A.
	Precision	±66%	±175%	±61%	±133%	±300%

[a] Emission factor based on engineering estimate and could vary by a factor of three.

[b] N.A. = not applicable.

[c] Emission factor calculated by subtracting ammoniation-granulation emissions from measured total plant emissions.

APPENDIX C

TLV'S FOR THE RAW MATERIALS, SECONDARY, AND MICRONUTRIENTS USED BY FERTILIZER MIXING PLANTS[48]

Material	ACGIH toxicity ratings		TLV,[a] g/m^3
	Acute	Chronic	
Ammonia, anhydrous	High	Slight	0.018
Ammonium nitrate	Moderate	Moderate	(0.01)
Ammonium sulfate	Moderate	Unknown	(0.01)
Ammonium (nitrate + sulfate)	Moderate	Unknown	(0.01)
Ammonium (phosphate + nitrate)	Moderate	Unknown	(0.01)
Diammonium phosphate	Moderate	Unknown	(0.01)
Phosphoric acid	Moderate	Moderate	0.001
Urea	Slight	Unknown	(0.01)
Urea ammonium nitrate	Unknown	Unknown	(0.01)
Sulfuric acid	Moderate	Unknown	0.001
Potassium chloride	Moderate	Unknown	(0.01)
Alumina silicates (zeolite)	Slight	Unknown	(0.01)
Calcium carbonate	Slight	Unknown	0.010
Calcium silicates	Slight	Unknown	(0.01)
Diatomaceous earth	Slight	Unknown	(0.01)
Kaolin	Slight	Unknown	0.010
Surfactants	Moderate	Unknown	(0.01)

[a]Parentheses indicate an assigned TLV of 0.01 g/m^3 because values have not been established; in addition, the TLV for nuisance dust is 0.01 g/m^3.

APPENDIX D

DETAILS OF SAMPLING PRESURVEY AT BULK BLENDING PLANTS

1. PLANT VISITS

Three fertilizer bulk blending plants were visited in order to obtain firsthand information about the mixing operations, to view the sources of emissions, and to locate a plant for sampling. These three plants were located within an 80-km radius of Dayton, Ohio and all were visited on 22 April 1975. The plants are described below.

a. Plant A

The first plant visited had a 4.5 metric tons/hr capacity ribbon mixer. The maximum daily plant capacity was 22.5 metric tons to 27 metric tons. This plant accomplishes approximately 70% of its production in February and March, and 30% during October and November.

The raw material, mixer, and loading operations were enclosed in a building at this plant. A front-end loader dumped the raw materials (usually 18-46-0, 45-0-0, 0-46-0, and potash) into the mixer unit. After mixing, the material was discharged onto a belt conveyor for transport to a spreader or truck parked under a roof-covered, three-sided shed. At the time of the visit no fertilizer was being mixed and it was not possible to view the emissions which might issue from the doors of the building.

b. Plant B

The second plant visited was equipped with a 2.7 metric tons/hr capacity gravity-type mixer. The daily plant

capacity was 18 metric tons to 22.5 metric tons and yearly production periods were the same as those of Plant A.

Again, all the mixing operations (raw material storage, mixing, and loading) were located in a building. The mixed fertilizer was conveyed by screw conveyors to the loading area where spreaders and trucks were parked under a roof-covered, two-sided shed. During the visit this plant was not mixing fertilizer.

c. Plant C

The third plant visited was newer in design than the other two plants. It was equipped with a 3.6 metric tons/hr capacity rotary-drum mixer. The daily maximum capacity was approximately 45 metric tons.

The raw materials (18-46-0, 45-0-0, 0-46-0, and potash) and mixing operations were all enclosed in a building. A front-end loader was used to add the raw materials to the mixer unit. The mixed fertilizer issued from the mixer onto a belt conveyor for transport out of the building to the truck or spreader parked under the belt conveyor discharge.

It was observed that small amounts of dust were emitted during the filling of a truck when the discharge end of the belt conveyor was about 1.2 m above the truck. However, the dust cloud was completely dispersed into an invisible plume within 10 m of the truck. (Wind speed was <4.5 m/s (<10 mph).) In addition, a slight dust cloud issued from the doors of the building when the front-end loader dumped prilled urea (45-0-0) and potash into the mixer unit. No visible dust passed through the doors when the other raw materials were added. Therefore, it was decided to analyze the raw materials to determine their particle size distribution.

2. RAW MATERIALS ANALYSIS

The four basic raw materials used at bulk blending plants are: diammonium phosphate, 18-46-0; prilled urea, 45-0-0; triple superphosphate, 0-46-0; and potash, 0-0-60. Approximately 4.5 kg of each of the four granular materials were collected from the raw material storage bins at Plant C, placed in plastic bags, and transported to MRC for analysis.

The particle size distribution of the four raw materials was obtained by using standard testing sieves and a Ro-Tap testing sieve shaker. The series of sieves used for the analysis are described below:

U.S. sieve designation	Sieve opening	Tyler equivalent designation
2000 μm	2000 μm	9 mesh
420 μm	420 μm	35 mesh
250 μm	250 μm	60 mesh
105 μm	105 μm	150 mesh
74 μm	74 μm	200 mesh
44 μm	44 μm	325 mesh

The analysis procedure began with assembly of the six sieves and the bottom pan. Then 300 grams of the material was placed into the top sieve (2000 μm). This assembly was placed in the Ro-Tap testing sieve shaker and shaken for 10 minutes. In order to obtain a weighable amount in the bottom pan (particles <44 μm), the procedure was repeated three times for each raw material species. Each repetition involved removing the contents of the top sieve, adding another 300 grams of the same material to the sieve, and shaking for 10 minutes more. For the four tests on each sample, a total of 1.2 kg of sample was used. It all cases >99% of the raw material consisted of particles >2000 μm.

The contents remaining on the sieves (250 μm, 105 μm, 74 μm, 44 μm, and pan) were emptied onto preweighed sheets of paper. Both the paper and dust were weighed on a pan balance to the nearest 0.0001 gram. The results of this analysis are given in Table D-1.

Table D-1. RESULTS OF SIEVE TEST FOR BULK BLENDING PLANT RAW MATERIALS

Sieve designation	Contents remaining on sieves, g			
	Triple super-phosphate 0-46-0	DAP 18-46-0	Urea 45-0-0	Potash 0-0-60
>250 μm	1,199	1,204	1,203	1,204
250 μm	0.0740	0.1010	0.0234	1.2217
105 μm	0.0871	0.0993	0.0553	1.5957
74 μm	0.0810	0.0451	0.0332	0.4860
44 μm	0.0771	0.0512	0.1077	0.2977
Pan (<44 μm)	0.0610	0.0230	0.1848	0.0377

3. EMISSION FACTOR

Using the results of the particle size analysis, it is possible to calculate worst-case emission factors for each of the particle size ranges for the raw materials. Worst-case emission factors are based on the assumption that all of the particles within the specific size range are emitted into the air during the loading operations. The results of this analysis are given in Table D-2.

The percent of sample values were calculated by dividing the weight of the particles captured on each screen by the total weight of the sample used and then converting into percentage. By scaling up this percentage value it is

Table D-2. WORST-CASE EMISSION FACTORS FOR THE RAW MATERIALS USED BY FERTILIZER BULK BLENDING PLANTS

Particle size distribution, μm	Triple superphosphate 0-46-0		DAP 18-46-0		Urea, prilled 45-0-0		Potash 0-0-60		Emission factor, g/kg of fertilizer
	% of sample	g/kg of product	% of sample	g/kg of product	% of sample	g/kg of product	% of sample	g/kg of product	
≤ 44	0.0051	0.051	0.0019	0.019	0.0154	0.154	0.003	0.03	0.063
45 to 74	0.0064	0.064	0.0042	0.042	0.0090	0.090	0.025	0.25	0.112
75 to 105	0.0068	0.068	0.0037	0.037	0.0028	0.028	0.040	0.40	0.133
106 to 250	0.0073	0.073	0.0082	0.082	0.0046	0.046	0.132	1.32	0.380
251 to 420	0.0062	0.062	0.0084	0.084	0.0019	0.019	0.101	1.01	0.294

possible to determine how many grams of particles in the specific size range are found in a kilogram of the raw material.

The values in Table D-2 show that the number of urea particles <44 μm is an order of magnitude higher than the number of such particles from any of the other three raw materials. In addition, potash particles in the size range between 44 μm and 74 μm are at least twice as numerous as particles in that range for the other raw materials. This result explains why small amounts of dust were emitted into the air when the front-end loader at Plant C dumped urea and potash into the mixer unit, but no dust cloud was visible when the other two raw materials were dumped. The last column in Table D-2 gives a collective emission factor for all four raw materials which is based on an equal proportion of these materials in the final mixed fertilizer.

Stokes' law for terminal settling velocities of spherical, unit density particles was used to calculate how far the particles in the various size ranges would travel before settling to the earth. For a mean wind speed of 4.5 m/s (10 mph) and an emission height of 6.1 m (20 ft), the distances calculated are: 105 μm, (4.5 ft); 74 μm, (9 ft); and 44 μm, (25 ft). These distances double if the wind speed is doubled. The observed minimum distance from the loading operations to the property line at this plant is approximately 30.5 m (100 ft).

Therefore, from Table D-2, for particles <44 μm, an emission factor of 0.063 g/kg is justifiable. Using this size range of particles to calculate an emission factor is in line with the observation that a small cloud of dust was emitted at Plant C during the loading operations, but the cloud settled and dispersed into an invisible plume within 9.1 m (30 ft) of the source.

In the absence of emission source test data, it is impossible to quantitatively assess an accuracy value for the emission factor of 0.063 g/kg. However, based on the particle size distribution of the raw materials, the sampling and analytical technique, and the settling rates of the particles, it is believed than an emission factor of 0.1 ± 100% g/kg is a very good estimate of the true emission factor resulting from handling, mixing, and loading the stored raw materials.

Since the samples were collected from the storage bins, prior to the mixing and loading operations, the emission factor indicates that half the emissions (0.05 g/kg) come from the loading operations and half from fugitive building dust emissions. It does not reveal how much of the 44 μm particles are lost when transferring the raw material from the railroad cars to the storage bins. Nor does this emission factor reflect what portion of the larger particles are broken down to the 44 μm particle size range due to material handling, mixing, and loading operations. Therefore, on a worst-case basis, an emission factor of 0.1 ± 100% g/kg is used for each of the three emission sources at a bulk blend plant (Table D-3). This procedure results in a total plant particulate emission factor of 0.3 ± 100% g/kg.

Table D-3. EMISSION FACTORS FOR UNCONTROLLED PARTICULATE EMISSIONS FROM FERTILIZER BULK BLENDING PLANTS

Emission source category	Emission factor, g/kg
Materials storage and handling	0.10 ± 100%
Loading operations	0.10 ± 100%
Fugitive building dust	0.10 ± 100%
Total plant	0.30 ± 100%

APPENDIX E

TLV AND LD_{50} VALUES FOR SELECTED HERBICIDES (ACTIVE INGREDIENTS) USED AT FERTILIZER MIXING PLANTS[48]

Type of herbicide	Toxicity	
	TLV,[a] g/m^3	LD_{50}- oral rat, mg/kg
Organic herbicides:		
Arsenicals	0.0005	800
Phenoxys:		
2,4-D	0.01	370
2,4,5-T	0.01	500
MCPA	(0.0005)	700 to 800
Phenyl urea:		
Diuron	(0.01)	3,400
Linuron	(0.01)	1,500 to 4,000
Fluometuron	(0.01)	8,900
Amides:		
Propachlor	(0.01)	1,200
Propanil	(0.01)	1,384
Analap	(0.01)	8,200
Alachlor	(0.01)	1,200
Carbamates:		
EPTA	(0.01)	1,630
Pebulate	(0.01)	1,120
Vernolate	(0.01)	1,780
Butylate	(0.01)	4,659
Dinitro group	0.0002	10 to 50
Triazines:		
Atrazine	(0.01)	3,080
Propazine	(0.01)	5,000
Simazine	(0.01)	5,000
Benzoics:		
Amiben	(0.01)	5,620
Dicamba	(0.01)	2,100 to 3,700
Other organics:		
Trifluralin	(0.01)	>10,000
Nitralin	(0.01)	2,000
Dalapon	(0.0005)	970
Norea	(0.01)	2,000
Fluorodifen	(0.01)	15,000

[a]Parentheses indicate an assigned TLV (because a TLV has not been established) based on the following criteria:

1. If $LD_{50} \leq 1{,}000$, then TLV = 0.0005 g/m^3.
2. If $LD_{50} > 1{,}000$, then TLV = 0.01 g/m^3.

APPENDIX F

DATA USED TO ESTABLISH EMISSION FACTORS FOR HOT MIX LIQUID MIX FERTILIZER PLANTS[36]

Paramater	Test 1	Test 2	Test 3	Test 4
Test duration, hr	3.5	3.5	1.6	2.5
Reactor - forced draft blower[a]	Off	Off	On	On
Pipe discharge (surface of liquid)[b]	Below	Above	Above	Below[c]
Production rate, metric tons/hr	18.6	18.6	18.6	18.6
Acid analysis, % total				
Total P_2O_5	70.6	70.6	70.05	70.05
Polyphosphate, P_2O_5[d]	33.3	33.3	28.9	28.9
MgO	0.45	0.45	0.40	0.40
Solids	Trace	Trace	Trace	Trace
Temperature, °C				
Acid	35	33	33	33
Melt (in pipe)	304	302	293	292
Ammonia				
To pipe reactor	41	34	37	38
To vaporizer	5	4	3	3
10-34-0				
Mix tank	78	75	67	69
From vaporizer	71	70	63	64
To storage	50	47	44	47
Product analysis, % of total				
N	9.4	9.7	10.0	9.9
P_2O_5	34.2	34.6	33.6	33.0
Polyphosphate[d]	73.4	69.4	60.4	51.5
Specific gravity[e] (20°C)	1.388	1.392	1.400	1.389
Stack condition	Slight Plume[f]	No Plume[g]	Heavy Plume[h]	Heavy Plume[h]
Opacity, %[i]	15	5	100	100
Relative humidity, %	12	29	4	34
Stack loss data				
Stack gas temperature, °C	35	16	66	61
Stack gas velocity, m/min	26	56	215	159
Sample volume corrected to stack conditions, m^3	1.5	1.6	0.5	0.5
Stack losses, (kg particulate)/hr	0.03	0.02	0.64	3.31
Total loss,[j] kg/hr				
Gaseous ammonia	0.36	0.045	1.5	0.36
P_2O_5	0.001	0.009	0.4	1.0
Fluorine	0.004	0.002	0.09	0.9
Total nitrogen[k]	0.32	0.045	1.3	0.9

[a] 142 m^3/min forced draft blower mounted on side of reactor.

[b] Pipe discharge melt above or below surface of liquid in mix tank.

[c] It is believed that the pipe discharged above the surface of the liquid in the mix tank.

[d] Non-orthophosphate.

[e] In parentheses, temperature at which specific gravity measured.

[f] Plume very light, only about 0.6 m long.

[g] No plume, could look down in stack and see demister pad.

[h] Plume several hundred yards in length.

[i] An estimate of plume density; most states allow up to 20% opacity.

[j] Combination of particulate and gaseous loss.

[k] Total nitrogen is the total of gaseous and combined nitrogen.

APPENDIX G

MASS OF PARTICULATE EMISSIONS FROM FERTILIZER MIXING PLANTS

MASS OF PARTICULATE EMISSIONS FROM FERTILIZER MIXING PLANTS

State	Number of plants			State production, metric tons/yr (tons/yr)	Controlled particulate emissions, metric tons/yr (tons/yr)	Total state particulate emissions,[53] metric tons/yr (tons/yr)	$\frac{\Sigma M_p}{\Sigma M_b}$[a], %
	Ammon.-gran.	Bulk blend	Liquid mix				
Alabama	8	39	32	473,890 (522,365)	94 (104)	1,178,642 (1,299,231)	0.008
Arizona	0	9	11	28,940 (31,900)	4 (4)	72,684 (80,121)	0.006
Arkansas	3	81	25	276,010 (304,244)	59 (65)	137,817 (151,917)	0.04
California	5	21	53	348,070 (383,675)	60 (66)	1,006,452 (1,109,423)	0.006
Colorado	0	72	3	87,870 (96,858)	25 (27)	201,166 (221,748)	0.01
Connecticut	0	7	1	9,740 (10,736)	2 (3)	40,074 (44,174)	0.005
Delaware	0	12	4	20,560 (22,663)	4 (4)	36,808 (40,574)	0.01
Florida	9	62	27	538,760 (593,871)	111 (123)	226,460 (249,629)	0.05
Georgia	11	101	100	800,720 (882,628)	150 (165)	404,573 (445,966)	0.04
Hawaii	0	4	2	7,980 (8,796)	2 (2)	61,620 (67,925)	0.003
Idaho	0	72	3	87,870 (96,858)	25 (27)	55,499 (61,177)	0.04
Illinois	17	749	281	2,133,030 (2,351,224)	444 (490)	1,143,027 (1,259,972)	0.04
Indiana	13	370	213	1,394,780 (1,537,456)	269 (297)	748,405 (824,975)	0.04
Iowa	17	833	277	2,222,870 (2,450,254)	473 (522)	216,493 (238,643)	0.2
Kansas	4	156	210	721,780 (795,613)	107 (118)	348,351 (383,991)	0.03
Kentucky	6	150	22	490,900 (541,116)	112 (123)	546,214 (602,098)	0.02
Louisiana	3	200	24	411,170 (453,230)	100 (110)	380,551 (419,486)	0.03
Maine	0	6	0	6,900 (7,606)	2 (2)	49,155 (54,184)	0.004
Maryland	0	57	4	72,310 (79,707)	20 (22)	494,921 (545,557)	0.004
Massachusetts	0	7	9	23,260 (25,640)	3 (4)	96,160 (105,998)	0.003
Michigan	4	117	7	333,860 (368,012)	81 (89)	705,921 (778,145)	0.01
Minnesota	9	400	125	1,093,080 (1,204,894)	235 (259)	266,230 (293,468)	0.09
Mississippi	3	39	9	200,670 (221,197)	43 (48)	168,355 (185,580)	0.03

[a] M_p mass from mixing plants; M_b = mass, state burden.

MASS OF PARTICULATE EMISSIONS FROM FERTILIZER MIXING PLANTS (continued)

State	Number of plants			State production, metric tons/yr (tons/yr)	Controlled particulate emissions metric tons/yr (tons/yr)	Total state particulate emissions,[53] metric tons/yr (tons/yr)	$\frac{\Sigma M_p}{\Sigma M_b}$,[a] %
	Ammon.-gran.	Bulk blend	Liquid mix				
Missouri	10	390	150	1,170,700 (1,290,454)	243 (268)	202,438 (223,146)	0.1
Nebraska	8	100	50	574,460 (633,223)	117 (129)	95,339 (105,092)	0.1
Nevada	0	1	1	2,840 (3,130)	1 (1)	94,041 (103,661)	0.001
New Jersey	0	9	3	15,420 (16,997)	4 (4)	151,771 (167,296)	0.003
New Mexico	0	10	8	25,020 (27,579)	4 (5)	102,787 (113,301)	0.004
New York	3	35	5	189,310 (208,675)	42 (46)	160,046 (176,418)	0.03
North Carolina	5	21	60	359,900 (396,715)	60 (66)	481,026 (530,231)	0.01
North Dakota	2	86	53	282,210 (311,078)	53 (59)	78,979 (87,058)	0.07
Ohio	13	260	102	1,080,690 (1,191,237)	224 (247)	1,766,085 (1,946,743)	0.01
Oklahoma	3	133	29	342,570 (377,612)	77 (85)	93,597 (103,171)	0.08
Oregon	2	69	35	232,240 (255,997)	46 (50)	169,451 (186,785)	0.03
Pennsylvania	3	52	9	215,620 (273,676)	48 (53)	1,810,629 (1,995,843)	0.003
Rhode Island	0	3	0	3,450 (3,803)	1 (1)	13,073 (14,410)	0.008
South Carolina	5	21	85	402,150 (443,287)	62 (68)	198,770 (219,103)	0.03
South Dakota	5	178	122	645,230 (711,232)	118 (130)	52,337 (57,691)	0.2
Tennessee	3	74	44	300,070 (330,765)	58 (64)	409,711 (451,621)	0.01
Texas	7	167	387	1,174,170 (1,294,279)	152 (167)	549,408 (605,609)	0.03
Utah	0	15	0	17,250 (19,015)	5 (6)	71,693 (79,027)	0.007
Virginia	4	94	30	346,280 (381,702)	74 (82)	477,502 (526,347)	0.02
Washington	3	55	100	372,860 (411,000)	55 (61)	161,937 (178,502)	0.03
West Virginia	0	3	0	3,450 (3,803)	1 (1)	213,718 (235,580)	0.001
Wisconsin	7	232	50	679,390 (748,888)	152 (167)	411,565 (453,665)	0.04
Wyoming	0	20	10	39,900 (43,982)	7 (8)	75,428 (83,144)	0.009
Total	195	5,640	2,768	20,260,000 (22,390,000)	4,209 (4,441)	16,430,000 (18,110,000)	

[a] M_p = mass from mixing plants; M_b mass, state burden.

APPENDIX H

CAPITAL AND OPERATING COST FOR HIGH EFFICIENCY WET SCRUBBERS

Table H-1. ESTIMATED CAPITAL COST DATA (COST IN DOLLARS) FOR TWO-STAGE CYCLONIC SCRUBBER[56]

Conditions/cost	Medium efficiency scrubber		High efficiency scrubber
	560 DSCMM[a]	840 DSCMM[a]	1,344 DSCMM[a]
Operating conditions			
Effluent gas flow			
ACMM[b]	1,000	1,600	2,500
°C	82	82	82
SCMM[c]	870	1,300	2,100
Moisture content, vol. %	35	35	35
Effluent dust loading			
g/SCM[d]	18	18	18
Particulate, kg/hr	60	90	140
Cleaned gas flow			
ACMM	1,000	1,500	2,400
°C	73	73	73
SCMM	880	1,300	2,100
Moisture content, vol. %	36	36	36
Cleaned gas dust loading			
g/SCM	0.35	0.35	0.35
Particulate, kg/hr	1.2	1.8	2.9
Cleaning efficiency, %	98	98	98
Estimated capital costs			
Gas cleaning device cost	$ 48,900[e]	$ 66,400	$ 92,867
Auxiliaries cost	14,050[e]	21,767	33,900
Fan(s)		17,350[f]	30,400[f]
Pumps		3,850[f]	5,800[f]
Damper(s)		1,450[f]	2,150[f]
Conditioning equipment		0	0
Dust disposal equipment		0	0
Installation cost	91,700[e]	102,417	145,733
Engineering		6,750[f]	10,500[f]
Foundations and support		19,300[f]	25,000[f]
Ductwork			
Stack		23,500[f]	33,750[f]
Electrical		4,400[f]	8,000[f]
Piping		9,250[f]	15,350[f]
Insulation			
Painting			
Supervision			
Startup		5,750[f]	9,250[f]
Performance test		2,150[f]	2,150[f]
Other		11,500[f]	17,000[f]
Total cost	$154,650[e]	$190,584	$272,500

[a]DSCMM = Dry standard cubic meter/minute.

[b]ACMM = Actual cubic meter/minute.

[c]SCMM = Standard cubic meter/minute.

[d]SCM = Standard cubic meter.

[e]Only two bids obtained for this size.

[f]Auxiliaries and items of installed cost averaged from two bids; third bidder did not itemize.

NOTE: Blanks indicate that data were not reported in reference cited.

Table H-2. ANNUAL OPERATING COST DATA FOR TWO-STAGE CYCLONIC SCRUBBERS[56]

Operating cost item	Unit cost	Annual operating costs, $/yr		
		Moderate efficiency scrubber		High efficiency scrubber
		560 DSCMM[a]	850 DSCMM[a]	1,400 DSCMM[a]
Operating factor, hr/yr		8,000	8,000	8,000
Total operating labor		3,670[b]	2,447	2,447
Total maintenance		6,825[b]	6,033	7,450
Total replacement parts		4,229[b]	3,801	5,355
Utilities				
Electric power	$0.003/MJ ($0.001/kw-hr)	12,030[b]	15,814	24,920
Fuel				
Pond water (make-up)	$0.07/1,000 liter ($0.25/1,000 gal)	2,235[b]	5,259	8,433
Water (cooling)	$0.01/1,000 liter ($0.05/1,000 gal)		0	0
Chemicals			0	0
Total utilities		14,265	21,073	33,353
Total direct cost		28,989	33,354	48,605
Annualized capital charges		15,465	19,058	27,205
Total annual cost		44,454	52,412	75,810

[a]DSCMM = Dry standard cubic meter per minute.

[b]Only two bids obtained for this size.

NOTE: Blanks indicate that data were not reported in reference cited.

Table H-3. ESTIMATED CAPITAL COST DATA (COSTS IN DOLLARS) FOR VENTURI CYCLONIC SCRUBBERS[56]

Conditions/cost	Medium efficiency scrubber		High efficiency scrubber
	560 DSCMM[a]	850 DSCMM[a]	1,400 DSCMM[a]
Operating conditions			
Effluent gas flow			
ACMM[b]	1,000	1,600	2,500
°C	82	82	82
SCMM[c]	870	1,300	2,100
Moisture content, vol. %	35	35	35
Effluent dust loading			
g/SCM[d]	18	18	18
Particulate, kg/hr	60	90	140
Cleaned gas flow			
ACMM	1,000	1,500	2,400
°C	73	73	73
SCMM	880	1,300	2,100
Moisture content, vol. %	36	36	36
Cleaned gas dust loading			
g/SCM	0.35	0.35	0.35
Particulate, kg/hr	1.2	1.8	2.9
Cleaning efficiency, %	98	98	98
Estimated capital costs			
Gas cleaning device cost	$ 33,250[e]	$ 44,433	$ 61,467
Auxiliaries cost	18,025[e]	28,500	45,300
Fan(s)		24,000[f]	43,100[f]
Pump(s)		3,800[f]	6,700[f]
Damper(s)		2,450[f]	3,150[f]
Conditioning equipment		0	0
Dust disposal equipment		0	0
Installation cost	76,680[e]	88,833	128,577
Engineering		6,600[f]	8,500[f]
Foundations and support		15,000[f]	21,700[f]
Ductwork		0	0
Stack		13,300[f]	29,750[f]
Electrical		5,300[f]	8,750[f]
Piping		5,800[f]	8,600[f]
Insulation			
Painting		2,100[f]	2,815[f]
Supervision			
Startup		4,500[f]	6,250[f]
Performance test		2,150[f]	2,150[f]
Other		14,750[f]	21,600[f]
Total cost	$127,955[e]	$161,766	$235,344

[a]DSCMM = Dry standard cubic meter/minute.

[b]ACMM = Actual cubic meter/minute.

[c]SCMM = Standard cubic meter/minute.

[d]SCM = Standard cubic meter.

[e]Only two bids obtained for this size.

[f]Auxiliaries and items of installed cost averaged from two bids. Third bidder did not itemize.

NOTE: Blanks indicate that data were not reported in reference cited.

Table H-4. ANNUAL OPERATING COST DATA FOR VENTURI CYCLONIC SCRUBBERS[56]

Operating cost item	Unit cost	Annual operating costs, $/yr		
		Moderate efficiency scrubber		High efficiency scrubber
		560 DSCMM[a]	850 DSCMM[a]	1,400 DSCMM[a]
Operating factor, hr/yr		8,000	8,000	8,000
Total operating labor		2,925[b]	1,950	1,950
Total maintenance		4,650[b]	4,100	5,166
Total replacement parts		3,932[b]	3,511	4,828
Utilities				
Electric power	$0.003/MJ ($0.011/kw-hr)	17,850[b]	27,645	43,901
Fuel				
Pond water (make-up)	$0.07/1,000 liter ($0.25/1,000 gal)	1,425[c]	5,562[d]	8,950[d]
Water (cooling)	$0.01/1,000 liter ($0.05/1,000 gal)		0	0
Chemicals			0	0
Total utilities		18,808[b]	31,354	49,868
Total direct cost		30,315[b]	40,915	61,812
Annualized capital charges		12,795[b]	16,177	23,534
Total annual cost		43,110[b]	57,092	85,346

[a]DSCMM = Dry standard cubic meter per minute.

[b]Only two bids obtained for this size.

[c]From one bidder only.

[d]Average of two bidders; third bidder did not itemize.

NOTE: Blanks indicate that data were not reported in reference cited.

Table H-5. ESTIMATED CAPITAL COST DATA (COSTS IN DOLLARS) FOR PACKED CROSSFLOW SCRUBBERS FOR DAP PROCESS PLANTS[56]

Conditions/cost	Medium efficiency scrubber		High efficiency scrubber	
	Small	Large	Small	Large
Operating conditions				
Effluent gas flow				
ACMM[a]	1,500	2,400	1,500	2,400
°C	73	73	73	73
SCMM[b]	1,300	2,100	1,300	2,100
Moisture content, vol. %	36	36	36	36
Contaminant effluent loading				
Fluorine, ppm	15	15	15	15
kg/hr	0.95	1.5	0.95	1.5
Cleaned gas flow				
ACMM	950	1,500	950	1,500
°C	210	210	210	210
SCMM	900	1,400	900	1,400
Moisture content, vol. %	7	7	7	7
Contaminant cleaned gas loading				
Fluorine, ppm	4.1	4.1	3.25	3.25
kg/hr	0.19	0.30	0.14	0.23
Cleaning efficiency, %	80	80	85	85
Estimated capital costs				
Gas cleaning device cost	$27,425	$ 43,200	$32,375	$ 47,050
Auxiliaries cost	13,684	17,470	13,684	17,470
Fan(s)	6,425	9,400	6,425	9,400
Pump(s)	7,089	7,755	7,089	7,755
Damper(s)	170	315	170	315
Installation cost	38,462	50,358	38,962	50,857
Engineering	2,000	2,000	2,000	2,000
Foundations & support[c]	3,500	5,000	3,500	5,000
Ductwork[c]	5,000	6,200	5,000	6,200
Stack[c]	5,500	6,000	5,500	6,000
Electrical[c]	5,430	7,970	5,430	7,970
Piping[c]	10,550	15,200	10,550	15,200
Insulation	375	500	375	500
Painting	375	450	375	450
Supervision	450	450	450	450
Startup	710	710	710	710
Performance test	1,475	1,475	1,475	1,475
Other	1,500	2,000	1,500	2,000
Total cost	$79,471	$111,028	$85,021	$115,377

[a]ACMM – Actual cubic meter/minute.

[b]SCMM – standard cubic meter/minute.

[c]Items of installed cost; itemized for materials and labor by one bidder only.

Table H-6. ANNUAL OPERATING COST DATA FOR PACKED CROSSFLOW SCRUBBERS[56]

Operating cost item	Unit cost	Annual operating costs, $/yr			
		Moderate efficiency scrubber		High efficiency scrubber	
		850 DSCMM[a]	1,400 DSCMM[a]	850 DSCMM[a]	1,400 DSCMM[a]
Operating factor, hr/yr		8,000	8,000	8,000	8,000
Total operating labor		1,738	3,613	1,738	3,613
Total maintenance		1,875	2,888	1,875	2,888
Total replacement parts		200	250	200	250
Utilities					
Electric power	$0.003/MJ ($0.011/kw-hr)	4,787	7,150	4,990	7,287
Fuel					
Pond water (make-up)	$0.07/1,000 liter ($0.25/1,000 gal)	34	55	35	57
Water (cooling)	$0.01/1,000 liter ($0.05/1,000 gal)				
Chemicals					
Total utilities		4,821	7,205	5,025	7,344
Total direct cost		8,624	13,955	8,828	14,095
Annualized capital charges		7,957	11,103	8,502	11,538
Total annual cost		16,581	25,058	17,330	25,633

[a]DSCMM = Dry standard cubic meter per minute.

NOTE: Blanks indicate that data were not reported in reference cited.

SECTION VIII

GLOSSARY OF TERMS

AFFECTED POPULATION - The number of people around a typical mixing plant who are exposed to a source severity greater than 0.1 or 1.0, as specified.

AMMONIATOR-GRANULATOR - An apparatus in which ammonia or its solutions are mixed with other fertilizer materials to produce a granular mixed fertilizer.

BULK BLENDING - The physical mixing, without chemical reaction, of granular single nutrient and multinutrient materials to produce a dry fertilizer mixture.

EMISSION FACTOR - The quantity of a species that is emitted per unit weight of final product.

FUGITIVE EMISSIONS - Gaseous and particulate emissions that result from industrial related operations, but which are not emitted through a primary exhaust system, such as a stack, flue, or control system.

HAZARD FACTOR - A value equal to the primary ambient air quality standard in the case of criteria pollutants or to a reduced TLV (i.e., TLV·8/24·1/100) for noncriteria pollutants.

LIQUID MIXING - The physical and chemical mixing of liquid raw materials to produce a fluid mixed fertilizer.

MIXED FERTILIZER - A fertilizer which contains more than one of the three primary plant nutrients.

N-P-K - A designation which indicates that the mixed fertilizer contains all three primary plant nutrients where N represents total nitrogen, P represents soluble P_2O_5, and K represents soluble K_2O.

PIPE REACTOR PLANT - A liquid mix plant in which phosphoric acid and ammonia are combined in a water-jacketed pipe prior to being mixed with the remaining ingredients.

PUGMILL - A U-shaped trough in which paddles mounted on twin contrarotating shafts agitate, shear, and knead a solid-liquid mixture to produce a granular mixed fertilizer.

REPRESENTATIVE PLANT - A plant defined for the purpose of establishing a base on which to determine the emissions and severity of a source. Characteristics of the representative plant are determined by dividing the total annual production of mixed fertilizers by the number of corresponding mixing plants.

SOURCE SEVERITY - The ratio of the ground level concentration of each emission species to its corresponding ambient air quality standard (for criteria pollutants) or to a reduced TLV (for noncriteria emission species).

SECTION IX

CONVERSION FACTORS AND METRIC PREFIXES[63]

CONVERSION FACTORS

To convert from	to	Multiply by
degree Celsius (°C)	degree Fahrenheit (°F)	$t_{°F} = 1.8\ t_{°C} + 32$
gram/kilogram (g/kg)	pound/ton	2.000
kilogram (kg)	pound-mass (lb mass avoirdupois)	2.205
meter (m)	foot	3.281
meter (m)	inch	3.937×10^{1}
meter^2 (m^2)	mile^2	3.861×10^{-7}
meter^3 (m^3)	foot^3	3.531×10^{1}
metric ton	ton (short, 2,000 lb mass)	1.102
pascal (Pa)	inch of water (60°F)	4.019×10^{-3}
radian (rad)	degree (°)	5.730×10^{1}
second (s)	minute	1.667×10^{-2}

PREFIXES

Prefix	Symbol	Multiplication Factor	Example
kilo	k	10^3	$1\ km = 1 \times 10^3\ m$
milli	m	10^{-3}	$1\ mm = 1 \times 10^{-3}\ m$
micro	μ	10^{-6}	$1\ \mu m = 1 \times 10^{-6}\ m$

[63] Metric Practices Guide. American Society for Testing and Materials. Philadelphia. ASTM Designation: E380-74. November 1974. 34 p.

SECTION X

REFERENCES

1. Commercial Fertilizers, Consumption in the United States, Year Ended June 30, 1973. Statistical Reporting Service, U.S. Department of Agriculture. Washington. Publication No. SpCr 7 (5-74). 1974. 26 p.

2. Farm Chemicals Handbook - 1973, Dictionary of Plant Foods. Willoughby, Ohio, Meister Publishing Co., 1973. 64 p.

3. Private communications. N. L. Hargett. National Fertilizer Development Center, TVA, Muscle Shoals, Alabama.

4. Private communications. Dr. W. C. White. The Fertilizer Institute, Washington, D.C.

5. Harre, E. A., and J. N. Mahan. The Supply Outlook for Blending Materials. In: TVA Fertilizer Bulk Blending Conference. Tennessee Valley Authority. Muscle Shoals, Alabama. Bulletin Y-62. August 1973. p. 9-21.

6. 1972 Census of Manufactures, Preliminary Report. U.S. Department of Commerce. Washington. Publication No. MC 72(P)-28G-1, -2, and -3. January 1974. 12 p.

7. Curley, R. D., and M. C. Sparr. Systems for Supplying Micronutrients. In: TVA Fertilizer Conference. Tennessee Valley Authority. Muscle Shoals, Alabama. Bulletin Y-78. August 1974. p. 46-54.

8. Feed and Weed. Special Report. Farm Chemicals, 1974. 31 p.

9. Private communications. H. L. Balay. National Fertilizer Development Center, TVA, Muscle Shoals, Alabama.

10. Farm Chemicals Handbook - 1973, Pesticide Dictionary. Willoughby, Ohio, Meister Publishing Co., 1973. 191 p.

11. Farmers' Use of Pesticides in 1971. U.S. Department of Agriculture. Washington. Agriculture Economic Report No. 252. July 1974. 56 p.

12. Chemistry and Technology of Fertilizers. V. Sauchelli (ed.). New York, Reinhold Publishing Corp., 1960. 424 p.

13. Shreve, R. N. Chemical Process Industries, 3rd Edition. New York, McGraw-Hill Book Co., 1967. 905 p.

14. Achorn, F. P., and H. L. Balay. Phosphoric Acid: Shipment, Storage, and Use in Fertilizers. Fertilizer Solutions Magazine. 17(5), September-October 1973.

15. Slack, A. V. Fertilizer Developments and Trends - 1968. Park Ridge, New Jersey, Noyes Development Corp., 1968. 405 p.

16. Private communications. E. A. Harre. National Fertilizer Development Center, TVA, Muscle Shoals, Alabama.

17. Powell, T. E. Granulation in the Fertilizer Industry. Process Technology International, 18:271-278, June-July 1973.

18. Private communications. J. C. Barber. National Fertilizer Development Center, TVA, Muscle Shoals, Alabama.

19. Achorn, F. P., and J. S. Lewis, Jr. Equipment to Control Pollution from Fertilizer Plants. Agricultural Chemicals and Commercial Fertilizer. 27, February 1972.

20. Robinson, J. M., et al. Engineering and Cost Effectiveness Study of Fluoride Emissions Control, Vol. I. U.S. Environmental Protection Agency, Office of Air Programs. Washington. PB 207506. January 1972.

21. National Emissions Inventory of Sources and Emissions of Phosphorus. U.S. Environmental Protection Agency. Washington. Publication No. EPA-450/3-74/013. May 1973. 54 p.

22. Private communications. F. P. Achorn. National Fertilizer Development Center, TVA, Muscle Shoals, Alabama.

23. Achorn, F. P., and J. C. Barber. Bulk Blender Equipment. Fertilizer Progress. 3(6), November-December 1972.

24. Achorn, F. P., and H. L. Balay. Plant Experiences in Adding Pesticides, Mirco and Secondary Nutrients to Bulk Blends. In: TVA Fertilizer Conference. Tennessee Valley Authority. Muscle Shoals, Alabama. Bulletin Y-62. August 1973. p. 70-79.

25. Achorn, F. P., and W. C. Brummitt. Different Methods of Adding Pesticides to Bulk Blends. Fertilizer Progress. 4:9-10, March-April 1973.

26. Achorn, F. P., and H. L. Balay. Systems for Controlling Dust in Fertilizer Plants. In: TVA Fertilizer Conference. Tennessee Valley Authority. Muscle Shoals, Alabama. Bulletin Y-78. August 1974. p. 55-62.

27. Barber, J. C. Environmental Control in Bulk Blending Plants. 1. Control of Air Emissions. In: TVA Fertilizer Conference. Tennessee Valley Authority. Muscle Shoals, Alabama. Bulletin Y-62. August 1973. p. 39-46.

28. Liquid Fertilizer Manual. Peoria, Illinois. National Fertilizer Solutions Association. 1967. 270 p.

29. Achorn, F. P., and J. S. Lewis, Jr. Alternative Sources of Materials for the Fluid Fertilizer Industry. Fertilizer Solutions Magazine. 18(4):8-13, July-August 1974.

30. Private communications. D. K. Murry. National Fertilizer Solutions Association, Peoria, Illinois.

31. Meline, R. S. Use of a Pipe Reactor in Production of Liquid Fertilizer of High Polyphosphate Content. Summary Report. National Fertilizer Development Center, TVA. Muscle Shoals, Alabama. November 1974. p. 9-11.

32. Achorn, F. P., and H. L. Kimbrough. Latest Developments in Commercial Use of the Pipe Reactor Process. Fertilizer Solutions Magazine. 18(4), July-August 1974.

33. Killough, B. Liquid Mixing Seminar Is Success. Fertilizer Solutions Magazine. 18(5), September-October 1974.

34. Achorn, F. P., H. L. Balay, and H. L. Kimbrough. Commercial Uses of the Pipe Reactor Process for Production of High-Polyphosphate Liquids. Fertilizer Solutions Magazine. 17(2), March-April 1973.

35. Meline, R. S., R. G. Lee, and W. C. Scott. Use of a Pipe Reactor in Production of Liquid Fertilizers with Very High Polyphosphate Content. Fertilizer Solutions Magazine. 16(2), March-April 1972.

36. Achorn, F. P., and J. I. Bucy. High-Analysis 12-44-0 Produced by Kugler Oil. Fertilizer Solutions Magazine. 16(5), September-October 1972.

37. Achorn, F. P., and H. L. Balay. Fluid Fertilizer Mixtures - 1972. In: Phosphorus in Agriculture. International Superphosphate and Compound Manufacturers' Assoc., LTD., London, England. Publication No. 60. December 1972. p. 27-36.

38. Tinsman, W. S. Mixing Techniques - Part 2 - Cold Mix and Satellites. Fertilizer Solutions Magazine. 17(3), May-June 1973.

39. Forbes, M. R. Mixing Techniques of Micronutrient with Liquid and Suspensions. Fertilizer Solutions Magazine. 17(5), September-October 1973.

40. Volk, W. Applied Statistics for Engineers, 2nd Edition. New York, McGraw-Hill Book Co., 1969. 415 p.

41. Private communications. Jim Price. Texas Air Control Board, Austin.

42. Private communications. Ray Beckett. Illinois EPA, Springfield.

43. Private communication. Allen Leevin. Ohio EPA, Dayton. September 12, 1974.

44. Private communications. Robert Iacampo. Florida EPA, Tallahassee.

45. Private communication. John Pruessner. Indiana Air Pollution Control Board, Indianapolis. September 19, 1974.

46. Compilation of Air Pollutant Emission Factors. U.S. Environmental Protection Agency. Washington. Publication No. AP-42. February 1972. p. 6.10.

47. Sax, N. I. Dangerous Properties of Industrial Materials. 3rd Edition. New York, Reinhold Book Corp., 1968. 1251 p.

48. TLV's® Threshold Limit Values for Chemical Substances and Physical Agents in the Workroom Environment with Intended Changes for 1975. American Conference of Governmental Industrial Hygienists. Cincinnati. 1975. 97 p.

49. Particulate Pollutant System Study, Vol. III - Handbook of Emission Properties. U.S. Environmental Protection Agency. Washington. PB 203522. May 1971. p. 313-338.

50. McNesby, J. R., and H. Okabe. Vacuum Ultraviolet Photochemistry. In: Advances in Photochemistry, Vol. 3, Noyes, W. A., Jr. (ed.). New York, John Wiley and Sons Publishers, 1964. p. 157-240.

51. Cvetanovic, R. J. Addition of Atoms to Olefins in the Gas Phase. In: Advances in Photochemistry, Vol. 1, Noyes, W. A., Jr. (ed.). New York, John Wiley and Sons Publishers, 1963. p. 115-182.

52. Turner, D. B. Workbook of Atmospheric Dispersion Estimates. U.S. Department of Health, Education, and Welfare. Cincinnati. Public Health Service. Publication No. 999-AP-26. 1969. 62 p.

53. National Emission Report - 1972. U.S. Environmental Protection Agency. Washington. Publication No. EPA-450/2-74/012. June 1974. 422 p.

54. Towards Cleaner Air - A Review of Britain's Achievements. Central Office of Information for the British Overseas Trade Board. London. April 1973. 59 p.

55. Achorn, F. P., H. L. Balay, E. D. Myers, and R. D. Grisso. A Pollution Solution for Granulation Plants. Farm Chemicals. 134, August 1971.

56. Air Pollution Control Technology and Costs in Seven Selected Areas, Phase I (Phosphate Industry). Prepared by Industrial Gas Cleaning Institute, Washington, for the U.S. Environmental Protection Agency. March 1973. 200 p.

57. Trayer, D. M. Environmental Control in Bulk Blending Plants. 1. Industrial Hygiene Aspects. In: TVA Fertilizer Conference. Tennessee Valley Authority. Muscle Shoals, Alabama. Bulletin Y-62. August 1973. p. 47-58.

58. Wheeler, E. M. Marketing Trends. In: TVA Fertilizer Conference. Tennessee Valley Authority. Muscle Shoals, Alabama. Bulletin Y-78. August 1974. p. 88-91.

59. Koepke, W. E. Future Potash Supply. In: TVA Fertilizer Conference. Tennessee Valley Authority. Muscle Shoals, Alabama. Bulletin Y-78. August 1974. p. 27-34.

60. Nilsen, J. M. Fertilizer Outlook "Iffy." Chemical Engineering. 82(6):28-29, March 1975.

61. Nelson, L. B. Trends in Technology. In: TVA Fertilizer Conference. Tennessee Valley Authority. Muscle Shoals, Alabama. Bulletin Y-78. August 1974. p. 92-95.

62. Boughner, R. T., and J. L. Nevins. Some Management Trends in the 1980's. In: TVA Fertilizer Conference. Tennessee Valley Authority. Muscle Shoals, Alabama. Bulletin Y-78. August 1974. p. 82-87.

63. Metric Practices Guide. American Society for Testing and Materials. Philadelphia. ASTM Designation: E380-74. November 1974. 34 p.

TECHNICAL REPORT DATA
(Please read Instructions on the reverse before completing)

1. REPORT NO. EPA-600/2-76-032c	2.	3. RECIPIENT'S ACCESSION NO.
4. TITLE AND SUBTITLE Source Assessment: Fertilizer Mixing Plants		5. REPORT DATE March 1976
		6. PERFORMING ORGANIZATION CODE
7. AUTHOR(S) Gary D. Rawlings and Richard B. Reznik		8. PERFORMING ORGANIZATION REPORT NO. MRC-DA-511
9. PERFORMING ORGANIZATION NAME AND ADDRESS Monsanto Research Corporation, Dayton Laboratory, Dayton, Ohio 45407		10. PROGRAM ELEMENT NO. 1AB015; ROAP 21AXM-071
		11. CONTRACT/GRANT NO. 68-02-1874
12. SPONSORING AGENCY NAME AND ADDRESS EPA, Office of Research and Development, Industrial Environmental Research Laboratory, Research Triangle Park, NC 27711		13. TYPE OF REPORT AND PERIOD COVERED Task Final; 1-12/75
		14. SPONSORING AGENCY CODE EPA-ORD

15. SUPPLEMENTARY NOTES EPA-650/2-75-019a was the first report of this series. EPA project officer for this report is D. A. Denny, Mail Drop 62, Ext 2547.

16. ABSTRACT The report describes a study of air pollutants emitted by the mixed fertilizer industry, consisting of three types of mixing plants: ammoniation/granulation (A/G) (195 plants), bulk blend (5,640 plants), and liquid mix (2,768 plants). The potential environmental effect of this source was evaluated, using source severity (defined as the ratio of the maximum ground-level concentration of an emission to the ambient air quality standard for criteria pollutants or to a modified TLV for non-criteria pollutants). Source severity factors for particulate emissions from A/G, bulk blend, and liquid mix plants are 0.1, 0.14, and 0.01, respectively. Severity factors for ammonia from A/G and liquid mix plants are 0.26 and 0.01, respectively. A/G plants (excluding diammonium phosphate plants) produced 45% of all mixed fertilizers in 1973; bulk blend and liquid mix plants produced 32% and 23%, respectively. Primary emissions from A/G plants are NH3 and particulates. Only particulates are emitted from bulk blend plants. Primary emissions from liquid mix plants are NH3 and particulates. Each of the emission values (for each pollutant from each source) is less than 0.1% of the corresponding national emissions of that material from all stationary sources.

17. KEY WORDS AND DOCUMENT ANALYSIS

a. DESCRIPTORS	b. IDENTIFIERS/OPEN ENDED TERMS	c. COSATI Field/Group
Air Pollution	Air Pollution Control	13B
Fertilizers	Stationary Sources	02A
Agricultural Engineering	Fertilizer Mixing Plants	02C
Assessments	Source Severity	14B
Dust	Particulate	11G
Ammonia		07B

18. DISTRIBUTION STATEMENT Unlimited	19. SECURITY CLASS *(This Report)* Unclassified	21. NO. OF PAGES 201
	20. SECURITY CLASS *(This page)* Unclassified	22. PRICE

EPA Form 2220-1 (9-73)