EPA-600/2-76-049b
March 1976

Environmental Protection Technology Series

ELECTRICAL ENERGY AS AN ALTERNATE TO CLEAN FUELS FOR STATIONARY SOURCES

Volume II - Appendix

Industrial Environmental Research Laboratory
Office of Energy, Minerals, and Industry
Research Triangle Park, NC 27711

RESEARCH REPORTING SERIES

Research reports of the Office of Research and Development, U.S. Environmental Protection Agency, have been grouped into five series. These five broad categories were established to facilitate further development and application of environmental technology. Elimination of traditional grouping was consciously planned to foster technology transfer and a maximum interface in related fields. The five series are:

1. Environmental Health Effects Research
2. Environmental Protection Technology
3. Ecological Research
4. Environmental Monitoring
5. Socioeconomic Environmental Studies

This report has been assigned to the ENVIRONMENTAL PROTECTION TECHNOLOGY series. This series describes research performed to develop and demonstrate instrumentation, equipment, and methodology to repair or prevent environmental degradation from point and non-point sources of pollution. This work provides the new or improved technology required for the control and treatment of pollution sources to meet environmental quality standards.

EPA REVIEW NOTICE

This report has been reviewed by the U.S. Environmental Protection Agency, and approved for publication. Approval does not signify that the contents necessarily reflect the views and policy of the Agency, nor does mention of trade names or commercial products constitute endorsement or recommendation for use.

This document is available to the public through the National Technical Information Service, Springfield, Virginia 22161.

EPA-600/2-76-049b
March 1976

ELECTRICAL ENERGY AS AN ALTERNATE TO CLEAN FUELS FOR STATIONARY SOURCES

VOLUME II--APPENDIX

by

R. M. Wells and W. E. Corbett

Radian Corporation
8500 Shoal Creek Boulevard
P.O. Box 9948
Austin, Texas 78766

Contract No. 68-02-1319, Task 13
ROAP No. 21ADD-042
Program Element No. 1AB013

EPA Project Officer: Walter B. Steen

Industrial Environmental Research Laboratory
Office of Energy, Minerals, and Industry
Research Triangle Park, NC 27711

Prepared for

U.S. ENVIRONMENTAL PROTECTION AGENCY
Office of Research and Development
Washington, DC 20460

APPENDIX A

BREAKDOWN OF FOSSIL FUEL ENERGY USAGE IN INDUSTRIAL DIRECT HEAT CATEGORY

APPENDIX A

TABLE OF CONTENTS

		Page
1.0	INTRODUCTION	A-1
2.0	PRIMARY METALS GROUP (SIC 33)	A-3
3.0	CHEMICAL AND ALLIED PRODUCTS (SIC 28)	A-7
4.0	PETROLEUM REFINING AND RELATED INDUSTRIES (SIC 29)	A-8
5.0	FOOD AND KINDRED PRODUCTS (SIC 20)	A-10
6.0	PAPER AND ALLIED PRODUCTS (SIC 26)	A-11
7.0	STONE, CLAY AND GLASS (SIC 32)	A-12
8.0	SUMMARY	A-15
9.0	REFERENCES - APPENDIX A	A-17

1.0 INTRODUCTION

In Section 3.0 of Volume I of this report, procedures used to obtain a detailed breakdown of the fossil fuel energy used in the residential, commercial and industrial sectors were discussed. This breakdown of energy usage was intended to provide a basis for the assessment of electrical substitution possibilities in each of the three sectors considered.

Residential and commercial sector energy demands in the years 1960 and 1968 were broken down in great detail in a Stanford Research Institute (SRI) report (ST-186). An assessment of electrical substitution possibilities could be made in the case of both of these sectors using only the data provided in the SRI report. This was not true in the case of the industrial sector energy breakdown provided by SRI. For this reason, it was necessary for Radian to gather additional data on fossil fuel consumption in that sector.

Industrial sector fossil fuel usage categories defined by SRI included: process steam, direct heat, feedstock and electrical generation. Of this group, process steam and direct heat are the only categories in which any electrical substitution possibilities exist. Due to the inefficiencies involved, it is not likely that electricity would ever be used to produce significant quantities of process steam. For this reason, the direct heat category was identified as being the only SRI classification group having any significant potential for electrical substitution.

In this appendix, Radian's analysis of the energy used to supply direct heat in the industrial sector is presented. These results are based upon information extracted from

appropriate reference material and assumptions made by Radian personnel. The assumptions, results, and the effects of errors in these assumptions are discussed below. In most cases, several sources of data are compared. In order to provide a common basis for this comparison, usage data given for years other than 1968 were projected to 1968 using an assumed annual energy growth rate of 4%.

Standard Industrial Classification (SIC) groups provided the basis for this survey of industrial sector energy use. The six major SIC groups which were examined in detail included:

SIC	
33	Primary Metals
28	Chemicals and Allied Products
29	Petroleum Refining and Related Industries
20	Food and Kindred Products
26	Paper and Allied Products
32	Stone, Clay and Glass Products

It will be shown in this section that these six SIC groups accounted for about 96% of the total fossil fuel energy consumed for direct heat in the industrial sector in 1968.

2.0 PRIMARY METALS GROUP (SIC 33)

The primary metals group is comprised of varied metal-related industries with the iron-steel industry and the aluminum industry being the major energy users. These two industries are described in detail in the following sections.

2.1 Iron-Steel Industry

Total energy used in the iron-steel industry in 1968 is given below.

	10^{12} Btu
Coal	2,284
Natural Gas	587
Petroleum	193
Electricity	157
TOTAL	3,221

Fossil fuels used to provide direct heat in the iron-steel industry are summarized in Table 1. The SRI total fossil fuel direct heat figure of 2,927 x 10^{12} Btu is comparable to the Sansom (EN-187) value of 2,801 x 10^{12} Btu and the AGA (AM-095) value of 2,260 x 10^{12} Btu. The AGA value is based upon 1964 data; therefore, it is possible that the 4% growth rate was not applicable over that four-year period. Also, since the AGA report did not break down the energy used in as detailed a fashion as the other two reports, there may have been some important applications omitted.

TABLE 1

1968 FOSSIL FUEL USAGE FOR DIRECT HEAT IN THE IRON-STEEL INDUSTRY

(10^{12} Btu)

Use	Coal	Natural Gas	Fuel Oil (and LPG)	Total
Blast Furnace	2,129	47	12	2,188
Associated Blast Furnace Activities	-	6	2	8
Steel Mining	-	102	82	184
Heating and Annealing	-	304	56	360
Other	18	128	41	187
TOTAL	2,147	587	193	2,927

Total Fossil Fuel Direct Heat = 2,927 x 10^{12} Btu

2.2 Aluminum Industry

Electricity is the primary source of energy in this industry since the smelting and refining processes are largely electrolytic in nature. An energy usage breakdown for this industry is shown in Table 2.

TABLE 2

1968 ENERGY USE IN ALUMINUM PRODUCTION

Process	Amount 10^6 Btu/t	Fuel Type
Electrolytic Smelting (Net)	46.7	Electricity
Melting	4.7	Fossil Fuels
Process Power, Steam	3.6	Fossil Fuels
Ancillary Needs	20.0	Fossil Fuels
Total	75.0	

In 1968, there were 3.7×10^6 tons of aluminum produced. This implies that the energy used was (3.7×10^6 tons) (75×10^6 Btu/ton) = 278×10^{12} Btu. Also, secondary aluminum refining used 7×10^{12} Btu, and wrought aluminum processing used 45×10^{12} Btu. Therefore, according to SRI, a total of 330×10^{12} Btu was utilized by the aluminum industry in 1968.

Since these energy figures were not broken down further in any of the sources considered, it was assumed that all of the energy consumed in the smelting category and half of the energy used for ancillary needs were fossil fuel direct heat. Likewise,

half of the secondary refining and wrought aluminum processing energy needs were assumed to be fossil fuel direct heat. These assumptions imply that 54×10^{12} Btu of fossil fuels were used to supply direct heat for aluminum production and that secondary recovery and processing of wrought aluminum consumed 26×10^{12} Btu of fossil fuels for direct heat in 1968. Thus, in 1968, fossil fuels provided 80×10^{12} Btu of direct heat energy in the aluminum industry.

The total amount of fossil fuel energy consumed to supply direct heat in both the iron-steel industry and the aluminum industry in 1968 was:

Iron-Steel	$2,927 \times 10^{12}$
Aluminum	80×10^{12}
Total	$3,007 \times 10^{12}$ Btu

This value, based on SRI data, compares with the Sansom value of $2,859 \times 10^{12}$ Btu and the AGA value of $2,337 \times 10^{12}$ Btu.

3.0 CHEMICAL AND ALLIED PRODUCTS (SIC 28)

The chemical group includes all chemical manufacturing activities, but excludes such industries as petroleum refining. The energy used in 1967 was

Space Heating: 80×10^{12} Btu

Process Heat: 498×10^{12} Btu

Space heating can be provided by either steam or fossil fuel combustion. If it is assumed that half of the space-heating requirements in this category are supplied by fossil fuels then,

40×10^{12} Btu Fossil Fuel Space Heating
498×10^{12} Btu Process Heat
538×10^{12} Btu in 1967

assuming a 4% annual growth rate yields

Total Fossil Fuel Direct Heat = 560×10^{12} Btu in 1968.

This agrees very well with the Sansom (698×10^{12} Btu) and AGA (679×10^{12} Btu) values, which do not include steam heating.

4.0 PETROLEUM REFINING AND RELATED INDUSTRIES (SIC 29)

This industrial grouping supplies a large share of all energy used by the nation. The energy derived and used internally from the input feedstocks is reported to be between 600,000 to 710,000 Btu per input barrel of crude. The bulk of this energy is used for steam generation and direct heating. Two methods were used to compute quantities of fossil fuels used to provide direct heat in this group.

4.1 Method 1

In 1968, 11,740,000 barrels (42 gallons/barrel) of crude were refined per day. For 350 refining days per year this implies that $4,109 \times 10^9$ barrels of crude were refined. Using a conversion factor of 7.10×10^5 Btu per barrel of crude, the total fossil fuel energy used to refine the crude is determined to be $2,917 \times 10^{12}$ Btu in 1968. If 60% of this energy is used to provide direct heat, then 60% of $2,917 \times 10^{12}$ is

Fossil Fuel Direct Heat = $1,750 \times 10^{12}$ Btu.

4.2 Method 2

The second method used to compute total fossil fuel consumption for this group involved the use of data given in the SRI report. Total energy use reported by SRI was $2,683 \times 10^{12}$ Btu. 60% of this is

Fossil Fuel Direct Heat = $1,610 \times 10^{12}$ Btu.

These two methods yielded results which were within 10% of each other. Sansom reported a value of $1,679 \times 10^{12}$ Btu and the AGA reported a value of $1,121 \times 10^{12}$ Btu. The Sansom value is in good agreement with the data given above, while the AGA value is considerably lower. It is felt that this number is possibly lower because the AGA may not have included all of the energy derived from internally generated gases and fuels.

5.0 FOOD AND KINDRED PRODUCTS (SIC 20)

This industrial grouping includes all food processing including meat processing, grain processing and beverage production activities. The data available from the sources considered were at best sketchy. The total fossil fuel energy used in this industry was available, however. Since it was felt that most of this energy would go into cooling or heating foods, 75% of the total energy used by this group of industries was assumed to be direct heat. In 1968, the following fuels were used in the amounts given.

Coal	168×10^{12} Btu
Oil	95×10^{12} Btu
Natural Gas	359×10^{12} Btu
	622×10^{12} Btu

If 75% of these were used to provide direct heat, then

Fossil Fuel Direct Heat = 467×10^{12} Btu.

This values compares favorably with data derived from Sansom and AGA data using the same 75% assumption. These numbers are 459×10^{12} Btu for Sansom and 538×10^{12} Btu for AGA, respectively. This 75% factor could be off by ±20% but since the total value of the number involved here is so small compared to the other major groups, the impact of this error would be insignificant.

6.0 PAPER AND ALLIED PRODUCTS (SIC 26)

This industrial grouping includes all paper, pulp and allied products. The amounts of fossil fuels used to provide direct heat in this industry are minute. The primary source of direct heat is internally generated waste (pulp, chips, and bark). The information reported below was obtained from a diagram in the SRI report. The total heat used was 1,679 x 10^{12} Btu. The amount of steam heat was 1,675 x 10^{12} Btu. Thus

$$\text{Fossil Fuel Direct Heat} = 4 \times 10^{12} \text{ Btu.}$$

Again, even if this value is incorrect by a considerable factor, the overall analysis is extremely insensitive to this small number. Sansom provided no useful numbers and the AGA report gave a value of .01 x 10^6 Btu per ton of paper. This implies that 400 x 10^6 tons of paper would have to be produced to use 4 x 10^{12} Btu. This is a factor of four larger than the total production of paper and pulp in 1968.

7.0 STONE, CLAY AND GLASS (SIC 32)

This group consists of all industries related to the stone industry including the cement and concrete industry. Ceramic and glass production activities are also included. Of this group, the cement and glassware industries are the major energy users with these two subgroups accounting for 59% of the total energy used in this SIC group. These two subgroups are discussed below in detail.

7.1 Cement

The major portion of all cement produced in the U. S. is Portland cement. This process requires direct heat in a kiln and in fact, this is the major use of direct heat in the industry.

Sources report that approximately 600 pounds of coal are required to produce a ton of cement. This implies that 7.86×10^6 Btu are required per ton of cement. There were 403,349,000 barrels of Portland cement (at 376 pounds per barrel) produced in 1968 in the U. S. This means that 152×10^9 pounds of cement (76 million tons) were produced. Therefore

$$\text{Fossil Fuel Direct Heat} = 597 \times 10^{12} \text{ Btu.}$$

Sansom reported that 502×10^{12} Btu/year and the AGA reported that 544×10^{12} Btu were used to provide direct heat for cement manufacturing in 1968. These values are all in good agreement.

7.2 Glass

The glass industry used 10.8×10^6 tons of silica sand in 1968 for glass making. The approximate formula for glass (by weight) is

100	parts sand (silica)
35	parts soda
12	parts lime
10	parts niters
157	parts

If this formula is scaled up to 10.2×10^6 tons silica sand, then

10.2×10^6	sand (tons)
3.6×10^6	soda (tons)
1.2×10^6	lime (tons)
1.0×10^6	niters (tons)
16.0×10^6	tons glass material

Assuming a 10% process loss, these figures imply that, in 1968, 13.4×10^6 tons of glass were produced. SRI reports that $14\text{-}18 \times 10^6$ Btu of energy are required per ton of glass produced for plates and containers. Therefore, using average of 16×10^{12} Btu per ton, 216×10^{12} Btu of energy was used. If 50% of this is fossil fuel direct heat, then

Fossil Fuel Direct Heat = 108×10^{12} Btu.

If this 50% factor were actually 75% the calculated direct heat value would be 162 x 10^{12} Btu. This would again represent a small change in overall direct heat energy usage. Sansom reported that 118 x 10^{12} Btu were used in the manufacturing of glass containers. If 75% is direct heat, then 89 x 10^{12} Btu were used in this subgroup. The glass container industry represents 75% of the glass industry energy use. The AGA states that approximately 163 x 10^{12} Btu of fossil fuel energy were used in this industry in 1968.

7.3 Glass and Cement

According to the SRI figures discussed above, these two subgroups consumed 705 x 10^{12} Btu of fossil fuel energy for direct heat in 1968 while Sansom and the AGA reported the use of 620 x 10^{12} Btu and 707 x 10^{12} Btu, respectively.

8.0 SUMMARY

The results of this breakdown of industrial sector direct heat requirements are summarized in Table 3. As can be seen, data derived from the three sources used are in reasonably good agreement. Based on this, the numbers derived from SRI data were presumed to be representative and were therefore used in the body of this report. It should be noted here that, although the six SIC groups considered accounted for only 67% of the total fossil fuel energy consumed in the industrial sector in 1968, these same groups accounted for 96% of the fossil fuels consumed for direct heat. It can therefore be concluded that all significant fossil fuel end uses in the industrial sector which are convertible to electricity have been covered by this survey.

TABLE 3

FOSSIL FUEL USAGE FOR DIRECT HEAT IN 1968 (10^{12} Btu)

Industry	SRI	Sansom	AGA
Primary Metals	3,007	2,859	2,337
Chemical	560	698	679
Refining	1,610	1,679	1,121
Food	467	459	538
Paper	4	-	-
Stone, Clay, Glass	705	620	707
SUBTOTAL OF ABOVE	6,353 (96%)		
TOTAL INDUSTRIAL SECTOR DIRECT HEAT USAGE (ST-186)	6,604 (100%)		
Other Direct Heat Uses Not Accounted for in Industry Groups Considered (by difference)	251 (4%)		

9.0 REFERENCES - APPENDIX A

AM-095 American Gas Assoc., Inc., A Study of Process Energy Requirements for U.S. Industries, Arlington, Va.

EN-187 Energy and Environmental Analysis, Inc., Energy Management in Manufacturing: 1967-1990, Vol. 1, summary report, draft, Arlington, Va., 1974.

ST-186 Stanford Research Institute, Patterns of Energy Consumption in the United States, Menlo Park, Ca., Stanford Research Inst., 1974

APPENDIX B

A COMPARATIVE ANALYSIS OF THE EFFICIENCIES OF ELECTRICAL END USE EQUIPMENT ITEMS VERSUS DIRECT-FIRED FOSSIL FUEL EQUIPMENT ALTERNATIVES

APPENDIX B
TABLE OF CONTENTS

		Page
1.0	INTRODUCTION	B-1
2.0	RESIDENTIAL SECTOR	B-2
3.0	COMMERCIAL SECTOR	B-13
4.0	INDUSTRIAL SECTOR	B-15
5.0	SUMMARY	B-18
6.0	REFERENCES - APPENDIX B	B-20

1.0 INTRODUCTION

As an alternative to the direct combustion of fossil fuels at stationary end use sites, it has been suggested that the environmental impacts of fossil fuel use can best be minimized by burning these fuels in large central power stations where efficient emission control techniques can be effectively applied. Electricity would then be used to satisfy the needs of energy consumers in the stationary sectors.

The technical incentives for moving toward this type of energy supply situation obviously depend strongly on the relative efficiencies of fossil fuel and electrical equipment items designed to satisfy equivalent end use demands. For this reason, an important part of this study consisted of a survey to gather data on the thermodynamic efficiencies of alternative equipment types which are presently used in the residential, commercial, and industrial sectors. The results of this survey are summarized in this appendix.

Each of the end use sectors considered in this study is discussed separately. First, fossil fuel-powered equipment items presently used in each sector and the energy use efficiency of each is discussed. Then, where they exist, electrical alternatives to each fossil fuel end use are identified and the efficiency of each alternative equipment type is presented. In the final section of this appendix, a summary table listing all of these alternatives is presented.

2.0 RESIDENTIAL SECTOR

The major energy end uses in the residential sector are space heating, water heating, cooking, clothes drying, refrigeration, and air-conditioning. For each of these end uses, an electrical substitute exists.

2.1 Space Heating

In 1968, fossil fuels satisfied 97% of the total U.S. space heating load. The two major types of fossil fuel-fired hardware which are currently in use include natural gas furnaces and fuel oil furnaces. Alternative electrical hardware items include baseboard heaters, electric furnaces, heat pumps, and electric heating mats.

Published data on the efficiencies of fossil fuel-fired residential space heaters are summarized in Table 1. It is obvious from these data that considerable variations in reported efficiencies are observed. Some of these variations are due to the different bases used by the various investigators. For example, the 75% "technical efficiency" published by SRI (ST-186) included only the efficiency of the burner or furnace whereas the 55.2% overall efficiency reported by Large (LA-144) included other losses which occur before the end use. The two efficiencies presented by Dunning (DU-069) provide an interesting comparison. The utilization efficiency is defined as:

$$\text{Utilization Efficiency} = 100 \cdot \frac{\text{Calculated Heat Loss of a House}}{\text{Annual Fuel Consumption of a House}}$$

and the furnace efficiency is defined as:

$$\text{Furnace Efficiency} = 100 \cdot \frac{\text{Heat Losses of the House which the Furnace Replaces}}{\text{Annual Fuel Consumption of the House}}$$

TABLE 1

EFFICIENCIES OF FOSSIL FUEL-FIRED RESIDENTIAL SPACE HEATERS

Equipment	Efficiency	Comments	Source
1. Natural Gas Furnace	75%	Technical efficiency	ST-186
	75%		MA-345
	67%	Combustion Efficiency	NA-187
	60-65%	Includes 90% supply efficiency	MA-345
	65%	Utilization efficiency	DU-069
	63%	Overall efficiency	LE-165
	60%	Average of extremes of reported efficiencies	HI-095
	60%	Overall efficiency	TI-026
	55.2%	92% delivery efficiency, 60% furnace efficiency	LA-144
	47%	Furnace efficiency	DU-069
	45%		HE-085
2. Fuel Oil Furnace	63%	Technical efficiency	ST-186
	60-65%	Includes 90% supply efficiency	MA-345
	60%	Average of extremes of reported efficiencies	HI-095
	50%		CO-106
	60%	System efficiency	TI-026

The utilization efficiency is somewhat misleading in that it credits the gas furnace for heating which is in reality performed by solar radiation, lighting, and appliances. The utilization efficiency also includes as useful energy, the heat required to warm to room temperature the outside air which infiltrates the house to replace the heated air escaping up the flue. In contrast, furnace efficiency does not credit the furnace with either heat gains or heat required to warm the infiltrated air.

Another important point to consider is the condition of the furnace during the test. High efficiencies are generally obtained by evaluating the performance of a clean furnace after warm up. In actual practice, furnaces tend to be dirty and to operate in a cycling mode. Both of these deviations from ideal conditions tend to lower their efficiencies. Also, some of the sources in Table 1 include losses which are incurred before the end use in their calculations. For example, a delivery or supply efficiency is sometimes included in the overall efficiency calculation. The delivery or supply efficiency takes into account losses suffered during extraction, transmission, or distribution of the fossil fuel.

A value of 60% was chosen here to represent the efficiency of a typical natural gas-fired furnace. This efficiency agrees approximately with results of two studies conducted by Hittman (HI-105) and the Institute of Gas Technology (LE-165). These studies reportedly considered all of the factors that influence the efficiency of a natural gas furnace such as air infiltration and exfiltration, furnace cycling, and contributions from ancillary heat sources. Furthermore, 60% is a reasonable average of the data reported in Table 1. This efficiency is not intended to include losses which are incurred before the gas is consumed at the end use site. Since the efficiencies of oil-fired furnaces are usually quoted as a few percent less than comparable gas furnaces, an efficiency of 55% was selected as a representative value for the efficiency of an oil-fired furnace.

Viable electrical hardware items which could be used in place of fossil fuel space heaters are listed in Table 2. The electric heating mat is omitted from this list since no efficiency or cost data for this alternative could be found. These mats are generally installed in the concrete slab of a single level building with a layer of sand below the concrete for insulation purposes. During off-peak hours, the resistive heating mats are turned on to warm the concrete slab. This mass functions as a large heat reservoir during the night and slowly releases heat to the building via radiation and convection the following day.

As can be seen from Table 2, wide variations in the efficiencies of electric baseboard heaters and electric furnaces are observed because of the electricity supply losses which are included in some of the end use efficiency figures shown. The efficiency of converting electrical energy into useful heat is usually given as 95-100%. Deviations from this range of values seen in Table 2 arise from the inclusion of fossil-fuel extraction efficiencies, steam-electric generation efficiencies, and transmission-distribution efficiencies in the calculation of overall end use efficiency values. In this study, it was appropriate to assume a 100% efficiency for the conversion of electrical energy into useful heat.

The heat pump is a device receiving much attention from energy conservation proponents since this energy mover can display thermal efficiencies which are greater than 100%. As it is defined here, an efficiency greater than 100% means that for every Btu of electrical energy consumed (3413 Btu/kWh) by the heat pump motor, more than one Btu of heat is transferred from the surroundings to the residence. Furthermore, if the motor is located inside the residence, a portion of the electrical energy consumed by the motor is recoverable in the form of dissipated heat. Efficiencies

TABLE 2

EFFICIENCIES OF ELECTRICAL SPACE HEATING EQUIPMENT

	Equipment	Efficiency	Comments	Source
1.	Electric Baseboard	100%		HE-085
		95%		CO-106
		95%	Technical efficiency	ST-186
		30%	33% generation efficiency; 91% transmission and distribution efficiency; 100% resistive heating efficiency	HI-095
		28.1%	95% delivery efficiency; 32.5% generation efficiency; 91% transmission efficiency; 100% conversion to heat efficiency	LA-144
2.	Electric Furnace	100%		HE-085
		95%		CO-106
3.	Heat Pump	226%		CO-106
		200%		LA-144
		200%		HI-095
		120-250%		MO-135
		119-203%		DU-069

of this device are reported to range from 100% to greater than 300%. A large dependence on the temperature differential between the inside and the outside environment partially accounts for these variations in reported efficiencies. Radian used an efficiency of 200% for heat pumps which are operating in the space heating mode since this figure is a reasonable average of the values reported.

2.2 Water Heating

Fossil fuels supplied 83% of all energy used for residential water heating in 1968. The efficiencies of gas-fired and fuel oil-fired water heaters are given in Table 3. Based upon the range of values shown in this table, an efficiency of 50% appears to be typical for gas-fired water heaters, whereas, the efficiency of fuel oil-fired water heaters is closer to 55%.

The efficiency of an electric water heater is reported to be 92% by SRI (ST-186). Other references burden the efficiency with prior conversion losses as discussed in Section 2.1. Since fuel supply losses are treated separately in this study, an efficiency of 92% was chosen for electric water heaters.

2.3 Cooking

The energy supplied by direct firing of fossil fuels represented 84% of all energy used for residential cooking in 1968. This energy was primarily consumed in gas stoves/ovens and other stoves/ovens fired by fuel oil or liquefied petroleum gas (LPG). The types of equipment used for cooking in the residential sector and their corresponding efficiencies are listed in Table 4. According to SRI, the efficiency of using fossil fuels directly for cooking is 37%. The efficiency of electric cooking

TABLE 3

EFFICIENCIES OF RESIDENTIAL WATER HEATERS

	Equipment	Efficiency	Comments	Source
1.	Gas-Fired Water Heater	64%	Technical efficiency	ST-186
		59%		CO-106
		50-55%	Includes 90% delivery efficiency	MA-345
2.	Oil-Fired Water Heater	50%	Technical efficiency	ST-186
		50-55%	Includes 90% delivery efficiency	MA-345
		41%		CO-106
3.	Electric Water Heater	92%	Technical efficiency	ST-186

TABLE 4

EFFICIENCIES OF RESIDENTIAL COOKING EQUIPMENT

	Equipment	Efficiency	Comments	Source
1.	Natural Gas Stove/Oven	37%	Technical efficiency	ST-186
2.	Fuel Oil/LPG Stove/Oven	37%	Technical efficiency	ST-186
3.	Electric Stove/Oven	75%	Technical efficiency	ST-186
4.	Microwave Oven	82%		Derived from data published in ST-186

is 75% when only the efficiency of conversion from electricity to cooking heat is considered. A relatively new device, the microwave oven, exhibits efficiencies above 80%.

2.4 Other End Uses

The remaining major energy end uses in the residential sector and the efficiencies of both fossil fuel-fired and comparable electrical equipment items are listed in Table 5. Supposedly, none of these efficiencies are burdened by losses which occur before the point of fuel consumption at the end use site.

It should again be noted that the efficiency of a heat pump is very dependent on the temperature differential between the inside of the residence and the outside environment. As was the case with the space heating application, two-hundred percent was selected as a representative thermal efficiency for a heat pump used for residential cooling.

At this point, some discussion of the apparent discrepancies seen in the data presented in Table 5 is appropriate. The end use efficiency figures used in this study are intended to represent the amount of useful energy which can be derived from a device as a function of the input energy required to operate the device. On this basis, electrical resistance heaters are assigned an efficiency of nearly 100% since nearly 3413 Btu of thermal energy can be derived from the consumption of one kwh of electrical energy. On this same basis, the heat pump is assigned a representative efficiency value which is greater than 100%, since more than 3413 Btu of thermal energy can be moved for every kwh of electrical energy consumed.

When considered in terms of this efficiency definition, some of the SRI efficiency figures which are listed in Table 5 do not appear to be realistic. Physically, electric air conditioners and electric heat pumps are identical devices since conventional versions of these units utilize the same freon vapor compression cycle. The efficiencies of these two devices should therefore be equivalent. Apparently, SRI efficiency figures for the four refrigeration devices shown in Table 5 are true thermodynamic efficiency values (calculated as the actual heat transferred divided by the theoretical heat which could be transferred by an ideal reversible heat engine operating between the temperature limits considered). On this basis, the thermodynamic efficiency of a typical commercial air conditioning unit is on the order of 50%. As it is defined for purposes of this study, however, it is more meaningful to assign an efficiency figure of 200% to a residential electric air conditioning unit.

According to the SRI figures in Table 5, gas air conditioners are 60% as efficient as electric air conditioners. This is probably reasonable since all of the thermal energy contained in the gas cannot be converted to useful work for purposes of compressing the working fluid (e.g., freon) in an air conditioning unit. This same relative efficiency difference would be expected in the case of gas and electric refrigerators. This is not seen in the data presented in Table 5 however. This discrepancy is probably accounted for by the fact that the figures for gas and electric refrigerators are not derived from the same source. As a result, it is likely that the two efficiency figures involved were not calculated using a consistent basis.

TABLE 5

EFFICIENCIES OF OTHER MAJOR RESIDENTIAL EQUIPMENT

	Equipment	Efficiency	Comments	Source
1.	Gas Clothes Dryers	47% 50%	Technical efficiency	ST-186 MA-345
2.	Petroleum (LPG) Clothes Dryers	47%	Technical efficiency	ST-186
3.	Gas Refrigerator	69%*		CO-106
4.	Gas Air-Conditioner	30%*	Technical efficiency	ST-186
5.	Electric Clothes Dryer	57% 54%	Technical efficiency	ST-186 MA-345
6.	Electric Refrigerator	50%*	Technical efficiency	ST-186
7.	Electric Air-Conditioner	50%*	Technical efficiency	ST-186
8.	Electric Heat Pump	200%*	See Table 2	

*These figures are not defined on a consistent basis. See discussion in Section 2.4

3.0 COMMERCIAL SECTOR

In this sector the major energy end uses are space heating, water heating, cooking, refrigeration, and air-conditioning. The electrical replacement equipment is the same as that for the residential sector.

3.1 Space Heating

At the present time, almost all commercial space heating demands are satisfied by fossil-fuel powered equipment. Table 6 lists the efficiencies of equipment items currently used in this application in the commercial sector. Large commercial space heaters generally operate at slightly higher efficiencies than their residential counterparts. Electrical replacements for these equipment items are identical to those listed in Table 2 for the residential sector.

3.2 Other End Uses

The efficiencies of other major fossil-fuel fired hardware items in the commercial sector are essentially the same as their counterparts which are used in the residential sector. This is also true in the case of the electrical replacement equipment. As a result, Tables 3, 4, and 5 should be consulted to obtain representative values for the energy use efficiencies of these equipment items.

TABLE 6

EFFICIENCIES OF COMMERCIAL SPACE HEATERS

	Equipment	Efficiency	Comments	Source
1.	Coal Furnace	70%	Technical efficiency	ST-186
2.	Natural Gas Furnace	77%	Technical efficiency	ST-186
3.	Fuel Oil Furnace	76%	Technical efficiency	ST-186

4.0 INDUSTRIAL SECTOR

The only energy end use in the industrial sector which has a potential for conversion from direct-fired fossil fuel equipment to electrical equipment is the "direct-heat" end use. As reported in Appendix A, 6604 x 10^{12} Btu were used in 1968 to provide direct heat in the industrial sector. In some applications, however, it is not technically feasible to change hardware. For example, in the petroleum refining and chemical industries, there exists no feasible electrical equipment to replace large process heaters and boilers. Also, in the cement industry, it is not technically feasible to replace direct-fired rotary kilns with electrical hardware. As a result of Radian's analysis of energy end uses which are convertible, it was determined that in the industrial sector, only 1679 x 10^{12} Btu of energy use in 1968 could have been satisfied by electrical energy.

Table 7 lists the fossil fuel end uses in the industrial sector which could reasonably be converted to electrical equipment. Also listed are the process energy requirements or efficiencies of each equipment item. Shown in Table 8 are the electrical equipment items which could be substituted for existing industrial sector fossil fuel end uses.

In general, it can be seen that the electrical equipment items listed in Table 8 require less energy per unit weight of processed material than their fossil fuel-powered counterparts. These higher efficiencies and lower energy requirements can be misleading, however, because fuel supply losses are not included in these figures. When a steam-electric generation efficiency of 33 to 35% is included, overall net efficiencies of electrical equipment items are lowered by a factor of approximately 3.

TABLE 7

CONVERTIBLE FOSSIL FUEL ENERGY USED TO SUPPLY DIRECT HEAT IN THE INDUSTRIAL SECTOR

Industrial Sector	End Use	Fossil Fuel Type	Energy Used* 1968 (10^{12} BTU)	Process Energy Requirements (BTU/wt) or Efficiency	Comments
1. Primary Metals					
a. Iron-Steel	Steel Making	Natural Gas	102	4.3×10^6 BTU/Ton	
		Fuel Oil and LPG	82	4.3×10^6 BTU/Ton	
	Heating, Annealing	Natural Gas	304	19×10^6 BTU/Ton	This is the average of the extremes 13×10^6 BTU/Ton and 25×10^6 BTU/Ton.
		Fuel Oil	56	19×10^6 BTU/Ton	
	Space Heating	Coal	18	70%	
		Natural Gas	128	77%	
		Fuel Oil	41	76%	
b. Aluminum	Melting, etc.	All Fossil Fuels	80		
2. Chemical	Space Heating	All Fossil Fuels	42	74%	Average of coal, gas and fuel oil furnace efficiencies.
3. Food	Space Heating Cooking	Coal	126	70%	
		Fuel Oil and LPG	71	37%	Fuel oil could provide some space heating.
		Natural Gas	270	37%	Natural gas could provide some space heating.
4. Stone, Clay, Glass	Glass Melting	Natural Gas	108	16×10^6 BTU/Ton	Some of 108×10^{12} BTU (about 12%) is coal and fuel oil.
5. Other Misc.	(from Table 3 Appendix A)		251		Combination of space heat and other uses. Most is probably convertible.
Total			1679		

*See Appendix A

TABLE 8

ELECTRICAL EQUIPMENT FOR REPLACEMENT IN INDUSTRIAL SECTOR

Industrial Sector	End Use	Electrical Equipment	Process Energy Requirement (BTU/wt) or Efficiency of Electrical Equipment	Comments	Source
1. Primary Metal					
a. Iron-Steel	Steel Making	Electric Arc Steel Making	1.9×10^6 BTU/Ton		AM-095
	Heating, Annealing	Electric Arc or Electric Induction Furnaces	2.1×10^6 BTU/Ton		AM-095
	Space Heating	Electric Furnaces	95%		ST-186
b. Aluminum	Melting	Electric Arc or Induction Furnaces	2.1×10^6 BTU/Ton		
2. Chemical	Space Heating	Electric Furnace	95%		
3. Food	Space Heating	Electric Furnace/Ovens	95%		ST-186
	Cooking	Electric Stoves	75%		ST-186
		Microwave Ovens	82%		ST-186
4. Stone, Clay, Glass	Glass Melting	Electric Furnaces	2.9×10^6 BTU/Ton		AM-095

5.0 SUMMARY

Table 9 lists the total energy which could have been converted from fossil fuel-fired equipment to electrically powered equipment in each sector in the year 1968. It should be noted that the residential and commercial sectors provide a very high percentage of the fossil fuel energy use which is convertible.

TABLE 9

CONVERTIBLE ENERGY IN 1968

Sector	Fossil-Fuel Energy Convertible (10^{12} Btu)	Total Fossil Fuel Energy Consumed in Sector (10^{12} Btu)	Percent of Energy Consumed in Sector Which is Convertible
Residential	7,798 (54%)	7,798 (23%)	100%
Commercial	4,818 (34%)	5,802 (18%)	83%
Industrial	1,679 (12%)	19,438 (59%)	9%
Total	14,295 (100%)	33,038 (100%)	42%

6.0 REFERENCES - APPENDIX B

AM-095 American Gas Assoc., Inc., A Study of Process Energy Requirements for U. S. Industries.

CO-106 Committee on Interior and Insular Affairs, U. S. Senate, Conservation of Energy, 98-18, 92nd Congress, 2nd Session, Washington, GPO, 1972.

DU-069 Dunning, R. L., "Furnace Efficiency Variations Explained", Elec. World 1 Feb. 1974.

HE-085 "Heat-Pump Prospects Show Shart Gain", Elec. World 180 (4), 80 (1973).

HI-095 Hirst, Eric and John C. Meyers, "Efficiency of Energy Use in the United States", Reprint, Science 179, 1299-1304 (1973).

HI-105 Hittman Associates, Inc., Residential Energy Conservation, A Summary Report, HUD-HAI-8, Columbia, Md., July 1974.

LE-165 Lewis, Stephen A., Private Communication, AGA, 3 June 1975.

LA-144 Large, David B., ed., Hidden Waste, Potentials for Energy Conservation, Washington, D. C., Conservation Foundation, 1973.

MA-345 Makhijani, A. B. and A. J. Lichtenberg, An Assessment of Residential Energy Utilization in the U.S.A., ERL-M370, Berkeley, Ca., Univ. California, College of Engineering, 1973.

MO-135 "Moore Turns to the Heat Pump", Power 1973 (Nov.), 24.

NA-187 National Economic Research Associates, Inc., Electric Heating Versus Oil Heating in the Service Territory of Long Island Lighting Company, 2 vols., 1973.

ST-186 Stanford Research Institute, Patterns of Energy Consumption in the United States, Menlo Park, Ca. Stanford Research Inst., 1972.

TI-026 A Time to Choose America's Energy Future, Ford Energy Policy Project, Cambridge, Mass., Ballinger, 1974.

APPENDIX C
MODULE DESCRIPTIONS

APPENDIX C
TABLE OF CONTENTS

		Page
I.	INTRODUCTION	C-1
II.	EXTRACTION MODULES	C-4
	A. COAL MINING	C-5
	B. OIL SHALE MINING	C-24
	C. OIL WELL	C-32
	D. GAS WELL	C-43
III.	PROCESSING/CONVERSION MODULES	C-53
	A. PHYSICAL COAL CLEANING	C-54
	B. CHEMICAL COAL CLEANING	C-65
	C. LOW BTU COAL GASIFICATION	C-80
	D. HIGH BTU COAL GASIFICATION	C-102
	E. COAL LIQUEFACTION	C-136
	F. SHALE OIL PROCESSING	C-201
	G. LIQUEFACTION SYN-CRUDE REFINERY MODULE	C-254
	H. DOMESTIC CRUDE REFINERY MODULE	C-284
	I. FOSSIL FUEL-FIRED STEAM ELECTRIC GENERATION	C-315
IV.	TRANSPORTATION MODULES	C-336
	A. RAILWAY	C-337
	B. PIPELINE	C-351
V.	END USE MODULES	C-363

I. INTRODUCTION

In this appendix, detailed discussions of the analytical procedures used to define individual module efficiencies and environmental impacts are presented. In this introductory section, some comments which apply to the module analysis effort in general are discussed.

The documents which are presented here are organized into four general groups: Resource extraction modules, processing and conversion modules, transportation modules and end use modules. Resource extraction modules are presented first in Section II. Four modules are included in this group:

(1) coal mining,

(2) oil shale mining,

(3) crude oil production, and

(4) natural gas production.

Within several of these general categories, more than one individual module unit is described. In the coal mining document, for example, two different mining cases are considered.

In Section III, processing and conversion modules are presented. These modules describe all of the processing steps needed to convert resources into end use fuels.

In Section IV, transportation modules are discussed. Included in this group of modules are descriptions of the original steps involved in the transportation of both energy resource raw materials and end use fuels. Two basic transportation modes are analyzed: (1) rail and (2) pipelines.

End use modules are presented in Section V.

Module Basis

In order to provide a consistent basis for comparing different types of energy resource extraction, processing, and transportation operations, all module calculations described here are based on the production of 10^{12} Btu/day of primary fuel products. As an example of the utility of this approach, the use of this consistent basis makes it possible to compare the environmental impacts of crude oil production directly with the impacts of producing an equivalent quantity of coal.

Module Efficiencies

In the modules considered in this study, three different process efficiency terms are used. These efficiencies are defined as follows:

(1) Primary Fuels Efficiency

$$= \frac{\text{heating value of primary fuels produced}}{\text{heating value of feedstock}}$$

(2) Total Products Efficiency

$$= \frac{\text{heating value of all products (primary fuels + by-products)}}{\text{heating value of feedstock}}$$

(3) Overall Efficiency

$$= \frac{\text{heating value of all products}}{\text{heating value of feedstock + ancillary energy input to module}}$$

The overall efficiency value represents the true energy use efficiency of the module since it accounts for all materials entering and leaving the module. Overall module efficiencies are therefore used to calculate total energy use efficiencies for entire scenarios.

Land Use

Land use values calculated for each of the modules represent the amount of land required by process facilities only. Quantities of land which might normally be acquired and used as "green belts" are not included in module land use estimates.

APPENDIX C

II. EXTRACTION MODULES

A. Coal Mining

B. Oil Shale Mining

C. Oil Well

D. Gas Well

APPENDIX C

II-A. COAL MINING

1.0 INTRODUCTION

Because such a large fraction of the coal found in the western U.S. is contained in deposits which are close to the surface, nearly all of the coal mined in this area is produced by surface mining methods. In 1973 for example 95% of the coal produced in the state of Wyoming was mined by surface methods (NI-036). For this reason, the mining module which is assumed to be representative of the current coal mining situation in the western states is a surface mining module.

An alternative source of coal supply which is considered here is the coal located in the midwestern state of Illinois. This resource is assumed to be a viable alternative to the low sulfur coal resources of the western U.S. primarily because of its proximity to the marketing area considered in this study (Chicago).

Underground mining methods are widely used to extract the coal resources of Illinois. In 1973, 53% of the coal produced in Illinois was mined by underground methods with the remaining 47% being produced by surface methods (NI-036). Due to this slight majority in favor of the underground method of mining, an underground mining module was developed for this resource extraction case. This approach is also justified because underground mining should account for an increasing share of the coal mined in Illinois in future years.

Because of similarities in the methods used for the analysis of both western and midwestern mining activities, both of the mining modules developed for this study are documented in this single writeup.

2.0 MODULE BASIS

In order to provide a consistent basis for the comparison of different types of resource extraction technologies, all module calculations described here are based upon the production of 10^{12} Btu/day of primary fuel product. For all of the coal mining modules considered, the primary fuel product is assumed to be run-of-mine coal.

Process efficiency and environmental impact data for both mining modules studied are summarized in Tables 2-1 and 2-2. The calculation procedures used to generate these data are discussed in Sections 3.0 and 4.0.

TABLE 2-1

SUMMARY OF ENVIRONMENTAL IMPACTS

WESTERN SURFACE MINING MODULE

(Module Basis: 10^{12} Btu/day Run-of-Mine Coal Produced)

Air (lb/hr)	
Particulates	779
SO_2	11.5
NO_x	157
CO	95.3
HC	18.2
Water (lb/hr)	
Suspended Solids	0
Dissolved Solids	0
Organic Material	0
Thermal (Btu/hr)	0
Solid Wastes (tons/day)	0
Land Use (acres)	1700
Water Requirements (gal/day)	0
Occupational Health (per year)	
Deaths	0.91
Injuries	34.1
Man-Days Lost	2252
Efficiency (%)	
Primary Fuel Efficiency	100
Total Product Efficiency	100
Overall Efficiency	99.6
Ancillary Energy (Btu/day)	4.3×10^9

TABLE 2-2

SUMMARY OF ENVIRONMENTAL IMPACTS

ILLINOIS UNDERGROUND MINING MODULE

(Module Basis: 10^{12} Btu/day Run-of-Mine Coal Produced)

Air (lb/hr)	
Particulates	0
SO_2	0
NO_x	0
CO	0
HC	0
Water (lb/hr)	
Suspended Solids	0
Dissolved Solids	0
Organic Material	0
Thermal (Btu/hr)	0
Solid Wastes (tons/day)	99.3
Land Use (acres)	12900
Water Requirements (gal/day)	0
Occupational Health (per year)	
Deaths	4.0
Injuries	402
Man-Days Lost	1.48×10^4
Efficiency (%)	
Primary Fuel Efficiency	100
Total Product Efficiency	100
Overall Efficiency	99
Ancillary Energy (Btu/day)	1.0×10^{10}

3.0 MODULE DESCRIPTIONS

In this section, the process features which distinguish the two mining modules considered here are discussed. In general, mining methods can be broken down into two basic classes: surface and underground methods. Each of these classes will be discussed separately.

3.1 Surface Mining

Surface mining is a general term which refers to any mining method involving the removal of surface material (overburden) to expose an underground resource deposit. Open-pit mining, strip mining, and auger mining are the three basic types of surface mining techniques.

Open-pit mining is commonly used in the metals industry to mine deep, very thick deposits of ore. Strip mining is used to extract thin deposits of a raw material lying generally within about 100 feet of the surface (200 ft. maximum for very thick deposits).

There are two major types of strip mining techniques which are currently practiced in this country. Contour stripping is a technique used to extract strippable coal resources found in mountainous terrain. Auger mining is generally employed in conjunction with a contour stripping operation. Since these two mining methods are not widely used outside of the Appalachian coal region of this country, they are not given any further consideration here.

Area stripping is the name given to the mining technique which is commonly used to extract the strippable coal resources

of the western and midwestern states. The basic steps involved in an area stripping operations are shown in Figure 3-1.

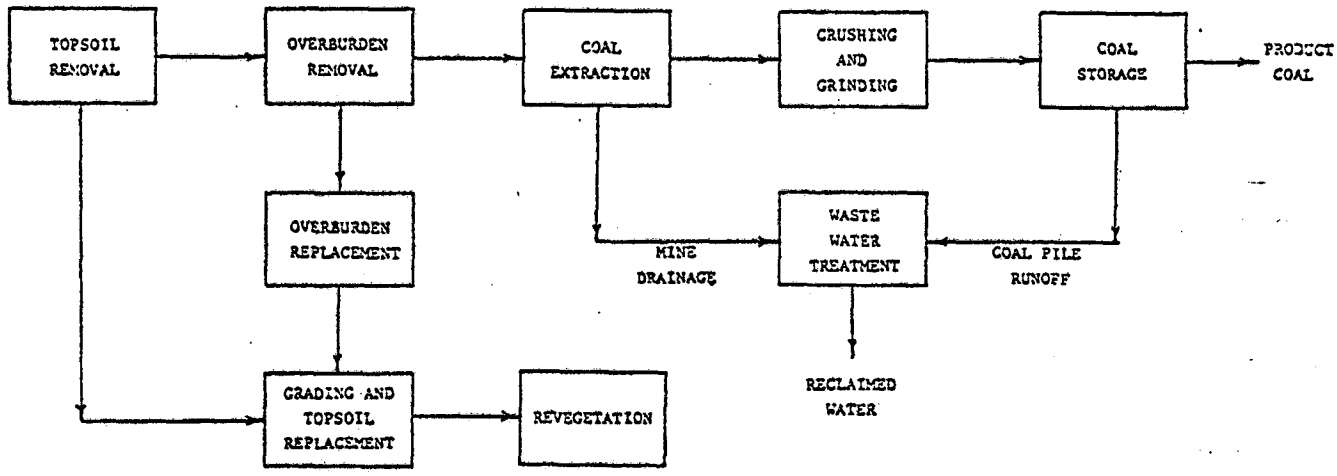

Figure 3-1. STEPS INVOLVED IN AREA STRIPPING OPERATION

Topsoil and overburden are first removed and placed in separate storage areas. After the exposed coal seam is mined, overburden and topsoil are replaced and reclamation activities begin.

In an established strip mine, both mining and reclamation activities take place on a simultaneous, continuous basis, as shown in Figure 3-2.

In addition to the mine site operations just described, major facilities found at a typical strip mine will include: haulage roads, run-off water collection and treatment facilities, a crushing and sizing plant, and loading facilities. In this

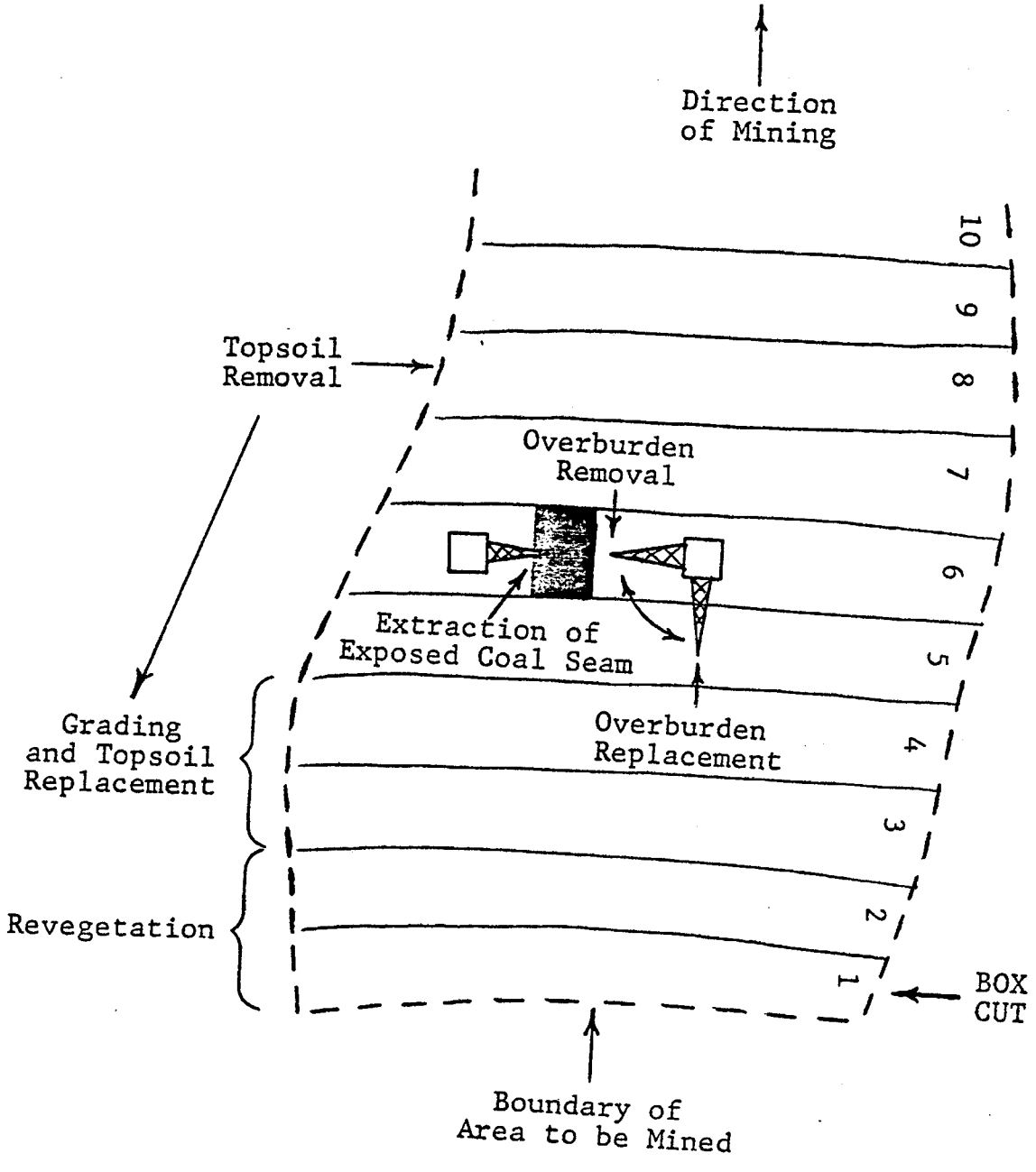

Figure 3-2. Schematic Aerial View of Area Stripping Operation

study, the mining module is assumed to include all the steps necessary to prepare coal for subsequent processing or transportation steps.

3.2 Underground Mining

Underground mining is a term which applies to mining methods which involve the construction of a tunnel or shaft to access an underground resource deposit. Once this access shaft is established, mining of the deposit can be attempted by any one of several means. Room and pillar and longwall mining are the two most commonly used underground methods.

In room and pillar mining, pillars of coal are left in place at appropriate intervals within the mine to provide roof support. In longwall mining, a seam of coal several hundred feet in width is mined continuously by a machine which provides its own roof support. As this machine moves through the coal seam, the mine roof is allowed to cave in behind the machine. Schematic views of these two mining techniques are shown in Figure 3-3.

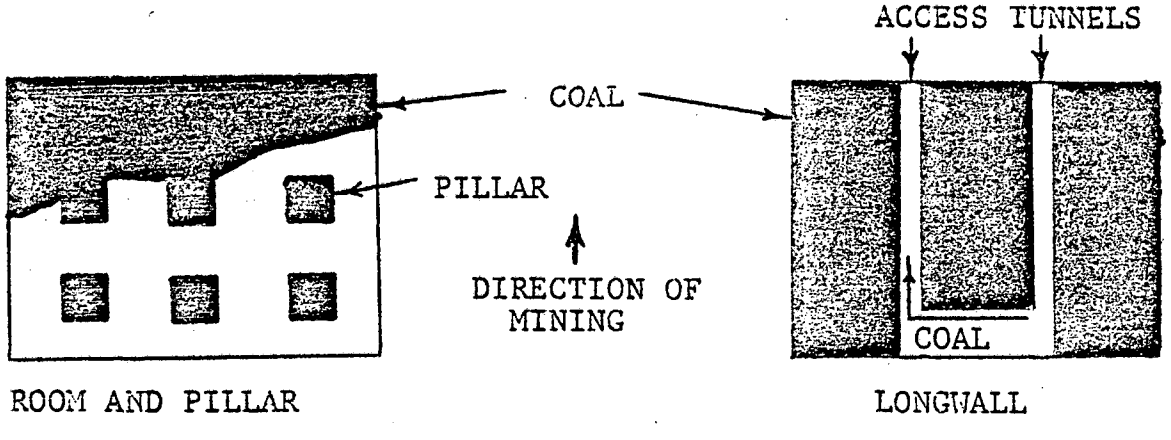

FIGURE 3-3
UNDERGROUND MINING METHODS

Coal produced in underground mines is normally brought to the surface by either rail or conveyor belt. Surface processing facilities for underground mines are similar to those required by typical surface mining operations.

3.3 Ancillary Energy

The ancillary energy requirements reported by Hittman (HI-083) for the two mining operations considered in this study are summarized in Table 3-1.

According to Hittman, surface mining operations typically use a mixture of diesel and electrically-powered equipment, while underground mining operations are normally completely electrified. It is significant to note here that the western surface mining module requires considerably less ancillary energy than the Illinois underground mining module.

3.4 Module Efficiencies

There are several ways to define an extraction module efficiency. Hittman's module efficiencies are calculated in such a way that the recovery efficiency of the mining step is included in the overall module efficiency. On this basis, a surface mining module efficiency of about 90% and an underground mining module efficiency of about 65% are obtained. This approach is proper if one seeks to compare the resource recovery efficiencies of different types of extraction methods. In this study, however, extraction module efficiencies are defined in a different fashion.

TABLE 3-1

ANCILLARY ENERGY REQUIREMENTS OF TYPICAL WESTERN AND MIDWESTERN MINING OPERATIONS[1]

(Basis: 10^{12} Btu Coal Extracted)

Western Surface

Operation	Electricity (kwhr)	Diesel Fuel (gal)	Total[2] (Btu)
Mining	$.96 \times 10^5$	6410	18.7×10^8
Hauling		1400	1.9×10^8
Crushing	1.82×10^5	2290	21.8×10^8
Reclamation		60	$.1 \times 10^8$
Total	2.78×10^5	10160	42.5×10^8

Illinois Underground

Mining	8.2×10^5	-	8.3×10^9
Crushing	1.8×10^5	-	1.9×10^9
Water Treat.	$.2 \times 10^5$	-	$.2 \times 10^9$
Total	10.2×10^5		10.4×10^9

[1]Source: (HI-083)

[2]Diesel Fuel: 5.8×10^6 Btu/bbl; 42 gal/bbl

Electricity: Converted at three times the electrical equivalent (3413 Btu/kwhr) of kwhr figure shown. Electrical generation losses are thus charged against the end user.

Mining processes are inherently inefficient from a resource recovery point of view since it is impossible to recover 100% of any in-place resource. In one sense, it is accurate to say that a resource which cannot be recovered is not really a useful resource in the first place.

Since the maximum energy available from an extraction module is equal to the output of the module, the primary fuel production efficiency and total product efficiency of both mining modules considered here were defined to be 100%. This efficiency definition is consistent with that used by Battelle (BA-230) in a similar study of this nature.

Based on ancillary energy requirements of $.4 \times 10^{10}$ Btu/10^{12} Btu coal extracted, an overall efficiency of 99.6% is obtained for a western surface mining operation. Ancillary energy requirements of an Illinois underground mining operation are shown to be 1.0×10^{10} Btu/10^{12} Btu coal extracted. As a result, an overall efficiency of 99% is obtained for the Illinois underground mining module.

3.5 Land Usage

The mining statistics shown in Table 3-2 were used to calculate the amount of land which must be disturbed in order to produce 10^{12} Btu/day of coal.

TABLE 3-2
HITTMAN MINING STATISTICS[1]

	Western Surface	Illinois Underground
Heating Value of Coal Mined (Btu/lb)	8780	11,000[2]
Coal Seam Thickness (ft)	39	6.8
Overburden Thickness (ft)	60	-
Average Recovery of In-Place Coal (%)	98%	57% (85%)[4]
Land Disturbed or Undermined During the Production of 10^{12} Btu Coal Product[3] (acres)	0.845	6.65 (4.46)[4]

[1]Source: (HI-083)

[2]Calculated average of two typical coal analyses given by Hittman

[3]Assumes coal density of 81 lb/ft^3

[4]See discussion below.

These figures show that, for a typical western strip mine, due to the thickness of the coal seam involved, less than an acre of land is disturbed to produce 10^{12} Btu of run-of-mine coal. For Illinois coal, between four and seven acres are undermined to produce 10^{12} Btu of coal product, depending on the mining method used.

It should be noted here that different average heating values were quoted by Hittman in certain cases where it would be expected that the same "typical" coal analysis would apply.

In Hittman's analysis of coal processing operations (gasification, liquefaction, etc.) for example, a western coal having a heating value of 8806 Btu/lb was used as the basis for describing process facility impacts. This value obviously differs somewhat from the data point shown in Table 3-2 above. Discrepancies of this nature were generally ignored in subsequent phases of this analysis because no significant changes in module impact parameters would have resulted from an attempt to resolve these discrepancies.

The two recovery figures shown in Table 3-2 for the Illinois underground mining case can be explained as follows. The 57% recovery figure is a national average value for room-and-pillar mining. As explained in Section 3.2, this figure applies to a situation in which significant quantities of coal are left in place in the mine to provide roof support. For the ideal case, negligible disturbance of surface land results from this approach to underground mining. In practice, the amount of subsidence which actually occurs is a complex function of a variety of factors including:

1) the geological characteristics of the mine itself, and

2) the specific mining procedures used in each case.

Recovery of in-place coal in a longwall mining operation averages 85% according to Hittman. The values shown in parentheses in the last column of Table 3-2 apply to the case in which longwall mining methods are assumed to be used.

Because the land use figures shown in Table 3-2 for the room-and-pillar mining case are the most conservative of the two situations considered, the room-and-pillar figure was used in subsequent calculations of underground mining impacts.

In addition to the mine site itself, land requirements for a mining operation will include the space occupied by processing and loading facilities. Estimated land requirements for typical western and Illinois mining operations are summarized in Table 3-3.

TABLE 3-3
LAND REQUIREMENTS FOR TYPICAL WESTERN AND ILLINOIS OPERATIONS PRODUCING 10^{12} BTU/DAY RUN-OF-MINE COAL[1]

	Western Surface	Illinois Underground
Mine Site:		
Active Working Area	84	665
Land Being Reclaimed	1541	12100
Haulage Road	10	24
Processing and Loading	75	75
Total	1700	12864

[1]All figures are acres of land required.

The land area designated in Table 3-3 as the active working area was assumed to be equal to the land disturbed or undermined in 100 days of mining activity (based upon the figures calculated in Table 3-2). For the surface mining case, this implies that reclamation activities were assumed to commence 100 days after the topsoil and overburden removal steps were

initiated in any given location. Reclamation land requirements were determined by assuming that five years are required to establish a plant cover in semi-arid western lands and three years are required to do so on land disturbed by mining in Illinois. Also, an additional two years were allocated to the Illinois underground mining case to allow for subsidence prior to the start of reclamation activities. The haulage road requirement for surface mining was taken from Hittman (HI-083). Land allocated to this usage in the underground case was assumed to be equal to the surface mining requirement, even though trains or conveyors would normally be used for mine-to-tipple transportation in an underground mining operation instead of trucks. The 75 acres allocated to above-ground processing facilities (crushing, loading, and water treatment) in both cases was an assumed figure.

3.6 Water Requirements

The only process water requirements of the mining operations considered here would consist of the water used for dust control in the crushing plant and along haulage roads. All of the water required to satisfy these demands is assumed to be available in the form of reclaimed water collected as mine drainage or surface run-off. For this reason, no water requirements are shown for the modules in Tables 2-1 or 2-2. It should be noted, however, that water requirements for effective reclamation are not considered here. Particularly in the case of western surface mining, reclamation water requirements may be significant (NA-172).

3.7 Occupational Health

The occupational health statistics shown in Tables 2-1 and 2-2 are taken directly from Hittman (HI-083).

4.0 MODULE EMISSIONS

The types of emission sources considered in the mining module analysis effort discussed here include:

1. air,
2. water, and
3. solid waste.

Each of these different emission categories will be discussed in separate subsections below.

4.1 Air Emissions

Major sources of air emissions found within a typical strip mining operation include:

- particulate emissions from solids handling operations
  - topsoil and overburden removal
  - coal mining
  - coal crushing
- air emissions from diesel powered mining equipment.

Particulate emissions from solids handling operations were determined from EPA emission factors for mining and quarrying operations. Emissions from diesel-powered mining equipment were also calculated by using EPA emission factors for the diesel fuel quantities specified in Section 3.3 of this writeup. A summary of the air emission calculations performed for the surface mining module considered is presented in Table 4-1. Underground mining module air emissions are shown to be negligible since

- the use of all electric equipment is assumed (no diesel engine emissions)

TABLE 4-1

SURFACE MINING MODULE

SUMMARY OF AIR EMISSION CALCULATIONS

Basis: 10^{12} Btu Coal Extracted/Day

(Emission Rates in lb/hr)

Western Surface:

	Part.	SO_2	CO	HC	NO_x
Overburden Handling[1]	460				
Wind Erosion[2]	75.3				
Mining Equipment[3]	3.5	7.3	60.7	11.6	99.7
Coal Handling[1]	238				
Coal Hauling (trucks)[3]	.8	1.6	13.1	2.5	21.6
Storage & Crushing[3]	1.2	2.6	21.5	4.1	35.3
Total	778.8	11.5	95.3	18.2	156.6

[1]Calculated from:

a. EPA emission factors for quarrying operations (0.1 lb/ton mined) from (EN-071), and
b. data presented in Table 3-2 assuming overburden density of 100 lb/ft^3 and coal density of 81 lb/ft^3.

[2]From (HI-083; footnote 1207) - 428 lb particulates/ac-yr from unreclaimed land.

[3]From EPA emission factors for diesel-powered internal combustion engines and diesel fuel consumption data in Table 3-1.

particulates generated during the mining and crushing steps are assumed to be captured using an efficient ventilation/filtering system.

4.2 Water Effluents

All mine drainage and surface runoff is assumed to be collected, treated, and used to satisfy mining operation water demands (dust suppression). No effluent discharge streams are, therefore, anticipated.

Since no water effluents were assumed, thermal discharges are also shown to be zero in Tables 2-1 and 2-2.

4.3 Solid Wastes

No solid wastes were assumed to be generated as a result of surface mining operations since waste solids can be returned to the mine and disposed of along with overburden material. Mine disposal of underground mining refuse is generally not practiced. According to Hittman (HI-083; footnote 1350) solid wastes are produced in an Illinois underground mining operation at a rate of 99.3 tons per 10^{12} Btu coal extracted.

APPENDIX C

II-B. OIL SHALE MINING

1.0 INTRODUCTION

Depending upon the physical characteristics at the particular oil shale site, oil shale may be mined by either surface or underground methods. Most actual experience in oil shale mining involves underground mining. Underground mining techniques are more universally applicable to the various oil shale deposits than surface mining, and as a result will be extensively utilized in the development of a shale oil industry. The Bureau of Mines has demonstrated the feasibility of room-and-pillar mining for oil shale at its facility near Rifle, Colorado.

Underground extraction is capable of removing approximately 65% of the shale from a typical mine (HI-083). A typical underground oil shale mine will supply enough shale to produce 50,000 BPD* upgraded oil. This production rate requires the excavation of approximately 70,000 TPD of raw shale.

Due to the large quantity of solids involved with oil shale mining, one of the major problem areas is solid waste disposal and land requirements. Fixed land requirement for an underground mine is only about 10 acres of surface land; however, land must be available for disposal of both the overburden from the mine opening and spent shale from the retort (assuming spent shale is disposed of at the mine site). With compacting, it is estimated that about 60% of the spent shale can be returned underground. The remaining 40% must be disposed of on the surface (US-093).

---

* All rates in calendar days.

2.0 MODULE BASIS

This module is based on a raw shale production (after crusher) of 10^{12} Btu/day. Using a 30-gallon per ton grade of shale with a heating value of 3765 Btu/lb, a module producing 132,800 TPD raw shale is defined. Calculated emissions from this module are summarized in Table 2-1.

TABLE 2-1

SUMMARY OF ENVIRONMENTAL IMPACTS

UNDERGROUND OIL SHALE MINING

Basis: 10^{12} Btu Raw Shale Produced/Day

Air (lb/hr)	
Particulates	64
SO_2	0
NO_x	0
CO	0
HC	0
Water (lb/hr)	
Suspended Solids	0
Dissolved Solids	0
Organic Material	0
Thermal (Btu/hr)	0
Solid Wastes (tons/day)	0
Land Use (acres)	1590
Water Requirements (gal/day)	0
Occupational Health (per year)	
Deaths	1.53
Injuries	70.0
Man-Days Lost	N/A
Efficiency (%)	
Primary Fuels Efficiency	100.0
Total Products Efficiency	100.0
Overall Efficiency	99.5
Ancillary Energy (Btu/day)	5.35×10^9

N/A - not available

3.0 MODULE DESCRIPTIONS

The underground oil shale module described here is assumed to utilize a room-and-pillar mining technique to extract the raw shale. The shale is transported from the mine to the crushers by a conveyor. The crushing step consists of primary, secondary, and tertiary crushing operations. Screening and briquetting operations are also included with the crushing step. A 10^{12} Btu/day output of raw shale from the crushers is equivalent to a production of 132,800 TPD raw shale. Approximately 1828 TPD of rock and roughage are separated at the crushers and disposed of at the mine site. Spent shale from the retort (164.3 x 10^3 TPD) is also considered to be returned to the mine for disposal. Approximately 60% of the spent shale can be returned to the mine. The remaining shale must be disposed of on the surface.

3.1 Module Efficiencies

As discussed in the coal mining module description document, the primary fuel and total product efficiencies of all extraction modules are defined to be 100%. This definition results from the fact that the maximum energy available from an energy supply scenario is the output of the extraction step. Ancillary energy requirements for an oil shale mining operation result from mining, hauling, and crushing activities. These ancillary energy requirements, shown in Table 3-1, are adjusted from values presented in the Hittman report (HI-083) to represent a mining module producing 10^{12} Btu of raw shale (after crushing). Mining energy requirements were determined from the following values:

- mining - 4200 kwhr/hr for extracting 73,700 TPD shale

- conveying - 2.55×10^5 kwhr for conveying 10^{12} Btu shale 1 mile

- crushing - 2090 kwhr/hr for crushing 73,700 TPD shale

If these values are used to calculate the ancillary energy requirements of an underground mine producing 10^{12} Btu/day of crushed shale, the results shown below are obtained.

TABLE 3-1
ANCILLARY ENERGY REQUIREMENTS OF AN UNDERGROUND OIL SHALE MINING MODULE

Operation	Electricity	Total (Btu)
Mining	7676 kwhr/hr	18.4×10^8
Hauling	2.59×10 kwhr/10^{12} Btu	25.9×10^8
Crushing	3820 kwhr/hr	9.17×10^8
Total		53.5×10^8

When these ancillary energy requirements are considered, the overall efficiency of the underground module is calculated to be 99.5%.

3.2 Water Requirements

Water requirements for this module (exclusive of reclamation) are zero if water used for dust or particulate control is supplied by water collected in excavated areas. The variable climate of the areas underlain by oil shale, and the lack of conclusive data based on actual revegetation efforts in these areas make it impossible to predict the amounts of water needed for reclamation. Preliminary experience

with revegetating spent shale, and the experience of the coal industry in semi-arid regions, suggest that water requirements for effective revegetation will be significant.

3.3 Land Requirements

Land requirements for this module were determined from estimates for an underground mine supplying shale for a 50,000 BPD shale oil facility (US-093). An estimate of the land impact is as follows:

(1) mine development: 20 acres

(2) solid waste disposal assuming 60% return of processed shale underground: 51 acre/year

(3) crushing facilities: 40 acres

Assuming a thirty-year mine life, the total land impact is 1590 acres.

3.4 Occupational Health

Occupational health information was obtained from the Hittman Study (HI-083). The basis for the values shown in Table 2-1 is a ten-year period of underground mining when 2919 accidents and 63.9 fatal accidents occurred. The data presented in the table have been converted to a 10^{12} Btu/day output basis.

4.0 MODULE EMISSIONS

4.1 Air Emissions

The only air emissions from the underground mining module are assumed to be particulates from the crushing operation. From the Environmental Statement for the Prototype Oil Shale Leasing Program (US-093), a value of 35 lb/hr particulates for a plant producing 72,700 TPD is extrapolated to 64 lb/hr for the 10^{12} Btu/day output module.

4.2 Water Effluents

No water discharges should result from this module since mine water can be used for dust or particulate control with any excess routed to an evaporation pond.

4.3 Thermal

No thermal discharges to surrounding water bodies result from this module since all water is contained.

4.4 Solid Wastes

Although large amounts of solid wastes are generated by the module, none of the solid wastes leave the module boundaries. Overburden, spent shale, and waste from the module are disposed of within the module. As a result, the solid waste for the module is zero. However, the area necessary to contain the solid waste is reflected in the land impact. The underground mine requires 1590 acres, assuming 60% disposal underground.

APPENDIX C

II-C. OIL WELL

1.0 INTRODUCTION

Crude oil production can result in three main hydrocarbon products: crude oil, dry natural gas, and natural gas liquids. The oil is composed chiefly of saturated hydrocarbons together with small amounts of organic compounds containing sulfur, nitrogen, and oxygen. The composition is approximately 83-87% carbon, 11-14% hydrogen, 0.05-2% sulfur, 0.1-2% nitrogen, and 0.2% oxygen (CH-182). In 1973 there were 497,378 producing oil wells in the United States yielding a daily average of 9.2 x 10^6 barrels (AM-099).

Oil wells normally utilize one of three methods to bring oil to the surface. These methods are natural flow, gas lifting (injection of gas into the flowing columns), and pumping. Most producing wells are operated by mechanical lifting methods using subsurface pumps of either a plunger or centrifugal type.

Operations typically involved with crude oil production include the following:

(1) extraction of the oil at individual wells,

(2) combination of the oil at a gathering station,

(3) separation of the water from the oil,

(4) disposal of the water by reinjection (either into the producing formation to maintain reservoir pressure or into an abandoned formation) or by routing to a containment/evaporation pond,

(5) separation of gas from the oil,

(6) transfer of the gas to a pipeline or reinjection for pressuring,

(7) transfer of the crude oil to product tankage.

The processing sequence used at a specific oil production site will vary depending on a variety of factors. As an example, gas may be separated at the well, the gathering station, or at the refinery. Crude quality and refinery proximity have a significant effect upon the operations that are performed at the well site.

2.0 MODULE BASIS

The oil well module is based on a crude production rate of 10^{12} Btu/day*. Using a heating value of 5.6×10^{6} Btu/bbl for domestic crude (BA-230), a module producing 178,571 BPD is defined. A summary of calculated emissions from the module is presented in Table 2-1.

*All rates in this module refer to calendar days.

TABLE 2-1
SUMMARY OF ENVIRONMENTAL IMPACTS
OIL WELL

Basis: 10^{12} Btu/Day Crude Oil Produced

Air (lb/hr)	
Particulates	0.144
SO_2	0.196
NO_x	0.25
CO	0.025
HC	54.4
Water (lb/hr)	
Suspended Solids	0
Dissolved Solids	0
Organic Material	0
Thermal (Btu/hr)	0
Solid Wastes (tons/day)	0
Land Use (acres)	1000
Water Requirements (gal/day)	0
Occupational Health (per year)	
Deaths	0.803
Injuries	76.7
Man-Days Lost	12800
Efficiency (%)	
Primary Fuels Efficiency	100
Total Product Efficiency	100
Overall Efficiency	100
Ancillary Energy (Btu/day)	0

3.0 MODULE DESCRIPTION

Although many operations are involved with the production of crude oil including exploration, drilling, and production, this module represents only the producing well. Emissions resulting from preceding phases of oil production are not considered. This module describes an oil field producing 10^{12} Btu/day of crude oil. For domestic crude averaging 5.6×10^{6} Btu/bbl, a 10^{12} Btu/day production is equivalent to 178,571 BPD. A separation step for light hydrocarbons is not considered here. Also, since gas is assumed to be reinjected, the only product which is assumed to be obtained from the module is crude oil.

3.1 Processing Sequence

The module processing sequence considered here involves the following steps:

(1) extraction (individual wells)

(2) gathering

(3) water separation and reinjection

(4) gas separation and reinjection

(5) transportation to storage (floating roof tanks).

A block flow diagram of this processing sequence is shown in Figure 3-1.

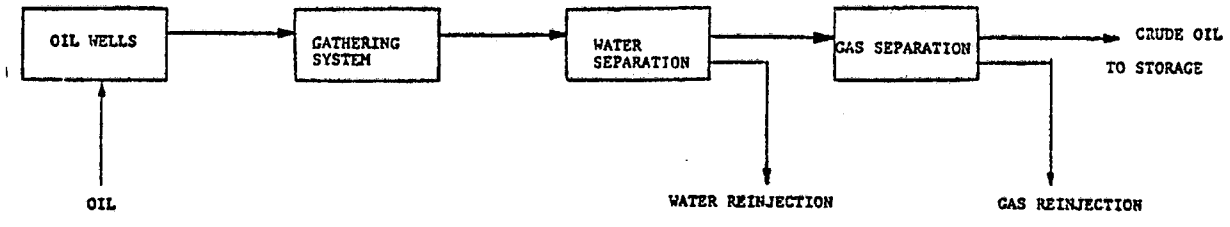

FIGURE 3-1

OIL WELL MODULE

3.2 Module Efficiencies

As discussed in the coal mining module writeup, the primary product and total product efficiencies of all extraction modules developed for this study are defined to be 100%.

Since the ancillary energy requirements of a typical oil production operation are negligible, the overall efficiency of this module is also shown to be 100%.

3.3 Water Requirements

Due to a lack of on-site processing water needs, no make-up water is assumed to be required by this module.

3.4 Land Use

Land use is determined from data in the Mineral Industry Survey (US-130). Using a Texas Gulf Coast average well production of 44.8 bbl/well-day, the number of wells required to produce 10^{12} Btu (178,571 bbl) per day is 3,986 wells. Assuming 1/4 acre per well (BA-230), the land requirement for this module is approximately 1,000 acres.

3.5 Occupational Health

Occupational health data were derived from information presented in a report by Battelle (BA-230).

4.0 MODULE EMISSIONS

4.1 Air Emissions

Air emissions from this module are considered to result from miscellaneous flaring and storage losses. Miscellaneous flaring is estimated to occur to an extent of about 2×10^{-5} bbl/bbl crude oil (BA-230). EPA fuel combustion factors for residual oil were used to determine the resulting emissions (EN-071). These factors are shown in Table 4-1.

TABLE 4-1
EMISSION FACTORS FOR RESIDUAL
OIL COMBUSTION (EN-071)

	Particulate	SO_x	CO	HC	NO_x	Aldehyde
lb/10^3 gal.	23	157 x S*	3	4	40	1

*S = wt. % sulfur in the oil

An average Gulf Coast crude sulfur content of 0.2 wt. % S was used (NE-044) for the SO_2 emission rate calculation. Aldehyde and hydrocarbon emissions were combined to give total organic emissions. These emissions are estimated to occur approximately fifty feet above the ground. Emissions from crude oil storage were determined by assuming the use of floating roof tanks and a six-day storage capacity. Using the EPA emission factor for crude oil storage in a floating roof tank (0.029 lb/day per 10^3 gal), a hydrocarbon emission rate of 54.4 lb/hr is calculated. A summary of calculated air emissions for the module is presented in Table 4-2.

TABLE 4-2
AIR EMISSIONS
OIL WELL MODULE

Basis: 10^{12} Btu/Day Output Crude Oil

	Particulates	SO_x	Total Organics	CO	NO_x
Miscellaneous Flaring (lb/hr)	0.144	0.196	0.025	0.025	0.25
Crude Oil Storage (lb/hr)	———	———	54.4	———	———
Total (lb/hr)	0.144	0.196	54.4	0.025	0.25

4.2 Water Pollution

All water separated from the oil is considered to be reinjected for pressure control or returned to an abandoned formation for disposal. No water pollution is considered to result from this module. An estimated 33% of the oil produced in the United States in 1965 was extracted with the aid of water flooding enhancement techniques. It is further estimated that by 1980, 50% of the United States' oil will be produced from formations stimulated by water flooding (CH-182).

4.3 Thermal Pollution

No thermal pollution to water bodies results from this module.

4.4 Solid Waste

No solid wastes are generated by the oil well module.

APPENDIX C

II-D. GAS WELL

1.0 INTRODUCTION

This section describes Radian Corporation's module for the production and processing of pipeline natural gas. The majority of the data used to define this module is taken from a report prepared by Hittman Associates for the Council on Environmental Quality (HI-083). When necessary, corrections or additions are made to Hittman's data using best available data and engineering judgment. While Hittman's data are based on an input of 10^{12} Btu of natural gas, an output basis is more appropriate for this study. Hittman's data were easily transformed to an output basis by dividing by the process efficiency.

2.0 MODULE BASIS

The natural gas production and processing module described here is based on a system capable of producing 10^{12} Btu/day of pipeline quality natural gas. The methodology used to calculate module emissions and impacts is the same as that employed by Hittman (HI-083).

The only source of wellhead natural gas considered in this module is Texas Gulf Coast gas. The important characteristics of the raw gas are listed in Table 2-1. Table 2-2 lists the module emissions and impacts which are expected to occur from the production and processing of this natural gas.

TABLE 2-1
IMPORTANT CHARACTERISTICS OF THE RAW GAS

	Texas Gulf Coast Gas	
CO_2	12	mole percent
H_2S	20	grains per 100 SCF
Heating Value	880	Btu/SCF

TABLE 2-2

SUMMARY OF ENVIRONMENTAL IMPACTS
PRODUCTION AND PROCESSING OF NATURAL GAS FROM
TEXAS GULF COAST GAS SOURCES

Basis: Production of 10^{12} Btu/day of Natural Gas

Air (lb/hr)	
Particulates	52.2
SO_2	166
NO_x	2090
CO	59.1
HC	81,700
Water (lb/hr)	
Suspended Solids	0
Dissolved Solids	0
Organic Material	0
Thermal (Btu/hr.)	0
Solid Wastes (tons/day)	0
Land Use (acres)	12,150
Water Requirements (gal/day)	0
Occupation Health (per year)	
Deaths	0.81
Injuries	77
Man-Days Lost	12,700
Efficiency (%)	
Primary Products Efficiency	100
Total Products Efficiency	100
Overall Efficiency	100
Ancillary Energy (Btu/day)	0

3.0 MODULE DESCRIPTION

3.1 Processing Steps

There are several processing steps necessary to produce pipeline quality natural gas from a well. The first step is production of the crude gas from the well. The output of many wells is piped to a central treating plant where the natural gas liquids are removed. An acid gas removal unit is then utilized to reduce the CO_2 and H_2S concentrations of the gas to levels that will meet federal natural gas regulations. The H_2S removed is subsequently recovered in a Claus plant. Finally, the cleaned natural gas is compressed and injected into a transmission pipeline. Figure 3-1 shows the steps involved in a natural gas production and processing system.

3.2 Products and By-products

A natural gas processing plant will produce natural gas liquids in addition to pipeline quality natural gas. These liquids may contain hydrocarbon compounds from C_3's to C_8's and are usable as fuels or chemical feedstocks. The Claus unit will produce a saleable sulfur by-product and is assumed to have a 94% sulfur recovery efficiency.

3.3 Ancillary Energy Requirements

From Hittman (HI-083), the ancillary energy requirements of a natural gas plant are 1.63×10^{15} Btu per 1.95×10^{16} Btu of production. On a 10^{12} Btu/day output basis this gives the ancillary energy requirements as 8.36×10^{10} Btu/day. However, since this energy would normally come from burning product natural gas, ancillary energy requirements for this module are considered to be zero.

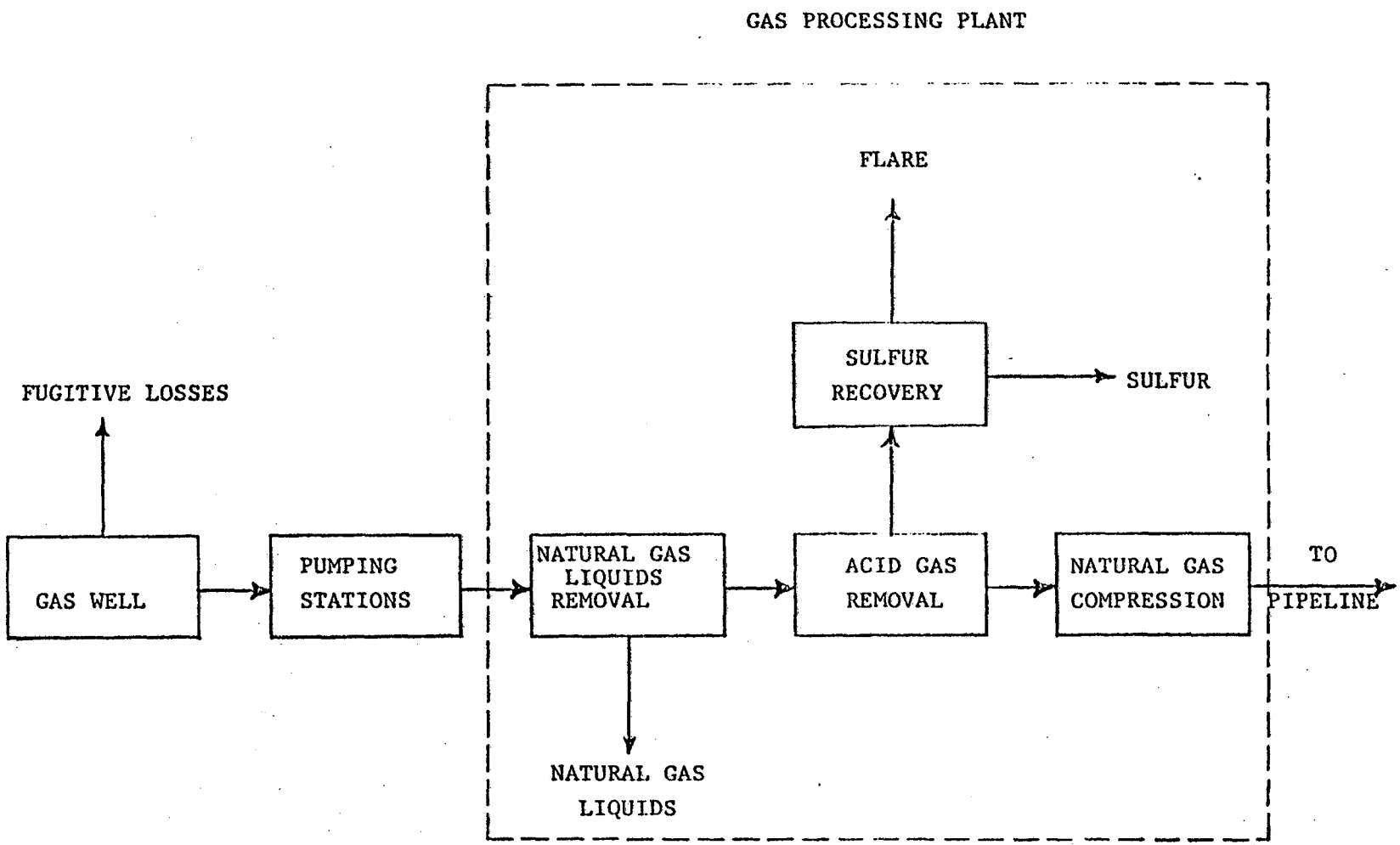

FIGURE 3-1
FLOW DIAGRAM OF NATURAL GAS PRODUCTION AND PROCESSING SYSTEM

3.4 Efficiency

In keeping with conventions established for this study, the primary product and total product efficiencies of the gas well module are defined to be 100%. While Hittman defines a production efficiency of less than 100% (based on loss of some natural gas from the wellhead), Radian assumes that the production step is 100% efficient. Fugitive well losses are treated only as air emissions. Likewise, product natural gas which is consumed as fuel for gas processing operations is treated as a necessary loss incurred as a result of gas production activities. Since there is no ancillary energy required for this module and no by-products with a fuel value are produced (natural gas liquids are assumed to be part of the primary product), all the efficiencies are equal.

3.5 Land Usage

Land requirements for the gas production and processing module were taken from Hittman (HI-083). According to Hittman, an average gas well requires 8.9 acre-yr/10^{12} Btu. This is equivalent to 3510 acres for the production of 1.08 x 10^{12} Btu/day. (All equipment must handle 1.08 x 10^{12} Btu/day - 8.36 x 10^{12} Btu/day is removed from the end product and used to meet the process energy requirements.) Field and gathering pipelines, including right-of-way, average 21.4 acre-yr/10^{12} Btu. This is equivalent to 8440 acres for handling 1.08 x 10^{12} Btu/day. Compression stations require 0.38 acre-yr/10^{12} Btu or 151 acres for handling 1.08 x 10^{12} Btu/day. The gas processing plant requires 50 acres. Therefore, total land requirements are 12,150 acres.

3.6 Occupational Health

The data on injuries, deaths and man-days lost for this module are taken directly from Battelle (BA-230). These numbers are converted from Batelle's basis (production of 10^6 Btu of natural gas) to Radian's basis (production of 10^{12} Btu/day of natural gas).

4.0 MODULE EMISSIONS

4.1 Air Emissions

Air emissions from gas production and processing result from fugitive losses at the wellhead, steam generation activities, and the sulfur recovery unit. Wellhead losses were assumed to be equal to 4.29% of production (HI-083). Steam generation air emissions were calculated from the amount of natural gas burned and emission factors from "Compilation of Air Pollutant Emission Factors" (EN-071). Sulfur dioxide emissions from the sulfur recovery plant were calculated assuming enough H_2S is removed from the gas to reduce the sulfur content to 2000 grains/10^6 ft^3 and a Claus unit sulfur recovery efficiency of 94%. Table 4-1 lists the individual sources and the quantities of air emissions estimate to occur at each source.

In order to evaluate the effects that particulates, SO_2, NO_x, CO and hydrocarbon emissions have on ambient air quality, it is necessary to define certain stack parameters used in calculating ambient air conditions. Mass and volumetric flow rates of each effluent stream were calculated from material balances. Stoichiometric combustion was assumed with 25% excess air for the steam generating facilities (75% for the sulfur recovery flare). Volumetric flow rates were based on an assumed exit gas temperature of 250°F. Stack heights, gas velocities and exit temperatures were assumed, while stack diameters were calculated from gas velocities and volumetric flow rates. Table 4-1 lists the air emissions and stack parameters determined for the individual emissions sources associated with this natural gas production and processing module.

TABLE 4-1

AIR EMISSION AND STACK PARAMETERS FOR GAS

PRODUCTION AND PROCESSING MODULE

BASIS: PRODUCTION OF 10^{12} BTU/DAY OF TEXAS GULF COAST NATURAL GAS

			Emissions lbs/Hr					Stack Parameters					
Source	Heat Input MMBtu/Hr	Fuel	Particulates	SO_2	Total Organics	CO	NO_x	Mass Flow lbs/Hr	ACFM	Velocity FPS	Height Ft.	Temperature °F	Diameter Ft.
1. Wellhead			–	–	8.17×10^4	–	–				50		
2. Steam Generation	3,480	Natural Gas	52.2	2.09	3.48	59.1	2090	3.40×10^6	1.06×10^6	60	500	250	19.3
3. Acid Gas Removal Unit	45,100		–	164	–	–	–	7.16×10^5	1.41×10^5	60	300	250	7.05
TOTAL			52.2	166	8.17×10^4	59.1	2090						

APPENDIX C

III. PROCESSING/CONVERSION MODULES

A. Physical Coal Cleaning
B. Chemical Coal Cleaning
C. Low or Medium Btu Coal Gasification
D. High Btu Coal Gasification
E. Coal Liquefaction
F. Shale Oil Processing
G. Liquefaction Syn-Crude Refinery Module
H. Domestic Crude Refinery Module
I. Fossil Fuel-Fired Steam Electric Generation

APPENDIX C

III-A. PHYSICAL COAL CLEANING

1.0 INTRODUCTION

This section describes Radian Corporation's module for the physical cleaning of Illinois coal. Physical coal cleaning is a proven industrial technique used to remove portions of the sulfur and ash contained in coal. While the sulfur present in coal exists in both inorganic and organic forms, physical cleaning is only effective in removing inorganic sulfur. In addition to reducing the coal sulfur content, physical cleaning results in an increase in the per pound heat content of the coal due to the partial removal of ash.

Emissions and efficiency data for physical coal cleaning were prepared by Battelle (BA-230). For this study Radian used Battelle's method, although when necessary additions or corrections were made using best available data and engineering judgment.

2.0 MODULE BASIS

The physical coal cleaning module is based on the production of 10^{12} Btu/day of cleaned coal. Table 2-1 gives the proximate and ultimate analyses of the Illinois coal used.

TABLE 2-1

PROXIMATE AND ULTIMATE ANALYSIS OF AN ILLINOIS COAL

	Proximate Analysis		Ultimate Analysis
Ash	11	C	61.0
H_2O	11	H_2	5.2
Volatile Matter	36	N_2	1.4
Fixed Carbon	42	O_2	6.8
Sulfur	3.6	S	3.6
Heating Value	11,000	Ash	11.0
		H_2O	11.0
			100.0

Note: All numbers are wt. % except heating value which is Btu/lb coal.

3.0 MODULE DESCRIPTION

Table 3-1 gives the emissions and impacts of the physical coal cleaning module.

3.1 Processing Steps

The physical coal cleaning module in this study is based on dense media washing. In this process, run-of-mine coal is crushed to a top size of three inches and sent to a dense media washing unit. In this unit the coal is separated into two layers by washing with a liquid of 1.6 specific gravity. The heaviest fraction, which contains the ash and refuse material, is removed from the bottom of the unit. The "float material" is removed and crushed to a top size of 3/8 inch. Screening of this material yields 38 mesh x 0 and 3/8 inch x 30 mesh fractions. The latter is sent to a dense media cyclone where it is treated with a liquid of 1.35 specific gravity. The float coal of density less than 1.35 from the dense media cyclones is washed, wet ground to 30 mesh x 0 and centrifugally dried. The 30 mesh x 0 fraction from the "float material" screening is sent to a froth flotation unit where the fines are frothed (after treating with alcohols, pine oil or kerosene to render the coal particles nonwettable and to facilitate agglomeration), skimmed, thickened and vacuum filtered. The two 30 mesh x 0 streams are combined to yield the physically cleaned coal product.

Refuse from the process is collected and stored until time of disposal. The liquid effluent streams, containing large quantities of suspended solids, are sent to holding ponds where the solids settle and the clear supernatant liquid is returned to the process. Figure 3-1 is a block diagram of the physical coal cleaning process.

TABLE 3-1

SUMMARY OF ENVIRONMENTAL IMPACTS

PHYSICAL COAL CLEANING MODULE: ILLINOIS COAL

Basis: Production of 10^{12} Btu/Day of Physically Cleaned Coal

Air (lb/hr)	
Particulates	0
SO_2	0
NO_x	0
CO	0
HC	0
Water (lb/hr)	
Suspended solids	0
Dissolved solids	0
Organic Material	0
Thermal (Btu/hr)	0
Solid Wastes (tons/day)	10,900
Land Use (acres)	170
Water Requirements (gal/day)	3.15×10^6
Occupational Health (per year)	
Deaths	1.43
Injuries	28.6
Man-Days Lost	12,700
Efficiency (%)	
Primary Product Efficiency	83.3
Total Product Efficiency	83.3
Overall Efficiency	83.1
Ancillary Energy (Btu/day)	3.06×10^9

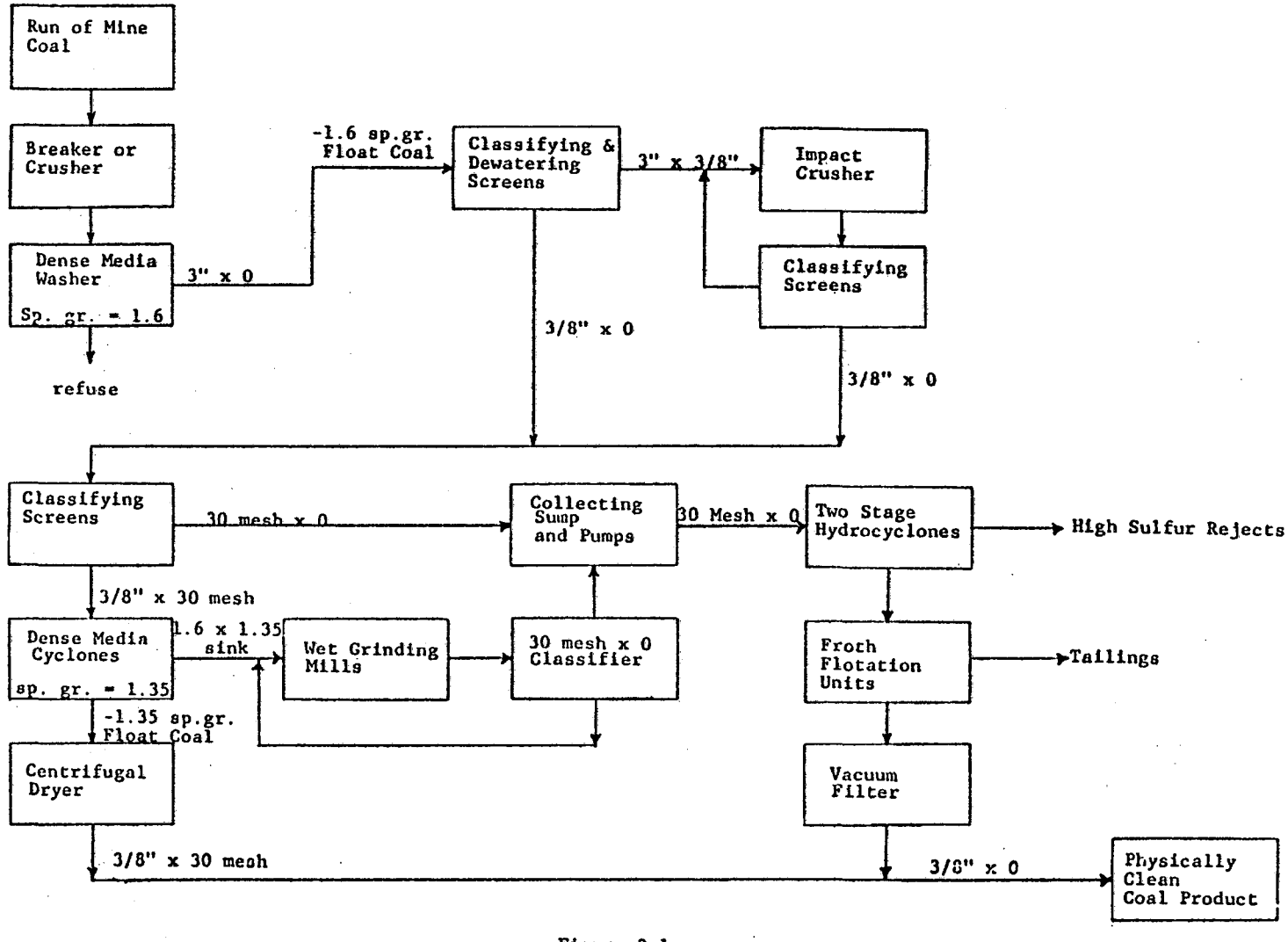

Figure 3-1
PHYSICAL COAL CLEANING PLANT PROCESSING SCHEME

3.2 Ancillary Energy Requirements

The ancillary energy requirements for a coal cleaning plant are given by Hittman (HI-083) as 2.55 x 10^9Btu/10^{12}Btu of coal input. Converting to a 10^{12}Btu/day output basis gives ancillary energy requirements as 3.06 x 10^9Btu/day.

3.3 Products and By-Products

The composition of the physically cleaned coal product is calculated from a mass balance around the cleaning plant and the following assumptions:

(1) 20% of the coal is lost during cleaning (AV-003)

(2) 50% of the coal ash is removed

(3) the sulfur content of the coal is 3.6%, of which 2.4% is inorganic sulfur and 1.2% is organic sulfur

(4) 80% of the inorganic sulfur is removed

(5) no organic sulfur is removed

From the mass balance, it is calculated that the cleaned coal heating value is 11,500 Btu/lb. On a 10^{12} Btu/day output basis, the amount of cleaned coal produced is 43,500 tons/day. No by-products are produced from a physical coal cleaning process. Table 3-2 shows the ultimate analysis of the physically cleaned coal product.

TABLE 3-2

ULTIMATE ANALYSIS OF A PHYSICALLY CLEANED ILLINOIS COAL

Ash	6.8
H_2O	11.5
H_2	5.6
C	65.2
N_2	1.1
O_2	7.7
S	2.1
Heating Value	11,500

Note: All numbers are wt % except heating value which is Btu/lb coal.

3.4 Raw Material Requirements

From Section 3.3 the amount of cleaned coal produced is 43,500 tons/day. Based on an assumed loss of 20% of the coal during processing, 54,400 tons/day is the coal feed rate.

The water requirements for a coal cleaning plant are given by Battelle (BA-230) as approximately 1,750 gals/ton of coal processed. For a 54,400 ton/day plant, 95.3×10^6 gals/day is the water usage. Also from Battelle, approximately 3.3% of the process water is consumed. This gives make-up water needs as 2,190 G.P.M. or 3.15×10^6 gals/day for a plant capable of producing 10^{12} Btu/day of cleaned coal.

3.5 Efficiency

In this study three different process efficiency terms are defined for each module. These are the primary product efficiency, the total product efficiency and the overall efficiency. The primary product efficiency is defined as the energy content of the primary product divided by the energy content of the feed. From Section 3.4 the amount of run-of-mine coal needed to produce 10^{12} Btu/day of physically cleaned coal is 54,400 tons/day. At 11,000 Btu/lb of coal, this is equivalent to 1.20×10^{12} Btu/day as feed to the plant. Thus, the primary product efficiency is 83.3%.

The total product efficiency is defined as the energy content of all products and by-products divided by the energy content of the feed. Since no by-products are formed during physical coal cleaning, the total product efficiency is equal to the primary product efficiency. The overall product efficiency is defined as the energy content of all products and by-products divided by the total energy input to the process, i.e.,

feed and ancillary energy. For this process the overall process efficiency is 83.1%.

3.6 Land Usage

From Battelle (BA-230) the land requirements for a 1000 ton/hr coal cleaning plant are 75 acres. Scaled to a plant capable of treating 54,400 tons/day, the land requirements are 170 acres.

3.7 Occupational Health

The data on injuries, deaths and man-days lost for the physical coal cleaning module are taken directly from Battelle (BA-230). These numbers are converted from Battelle's basis of 10^6 Btu output to Radian's basis of 10^{12} Btu/day of physically cleaned coal product.

4.0 MODULE EMISSIONS

4.1 Air Emissions

Air emissions from the coal cleaning process are limited to dust generated during coal handling. New coal cleaning plants are assumed to be completely enclosed and to utilize bag houses to control particulate emissions. Therefore, negligible air emissions would be expected to result from physical coal cleaning.

4.2 Water Emissions

Water streams within the coal cleaning process may contain high levels of suspended and dissolved solids. However, all liquid waste streams are routed to holding ponds to allow settling of the suspended solids. The clear supernatant liquid is then recycled to the process. Thus, no liquid effluents result from the cleaning process.

4.3 Solid Wastes

Solid wastes from the coal cleaning process come from the 20% loss in process feed. For a feed of 54,400 tons/day, 10,900 tons/day of solid wastes are generated. Since the coal cleaning process is normally a mine mouth operation, it should be possible to return all solid wastes to the mine for disposal.

4.4 Thermal Discharge

Thermal discharges to water bodies are nonexistent since no liquid streams leave the plant site.

APPENDIX C

III-B. CHEMICAL COAL CLEANING

1.0 INTRODUCTION

The technology of chemically removing sulfur from coal is still in a developmental stage. Bench and pilot scale work has shown that almost 100% of the inorganic sulfur and up to 50% of the organic sulfur can be removed, depending on the type of chemical reagent employed. However, none of the processes has reached the commercial stage of development.

Since most of the chemical desulfurization processes have been examined only on a small scale, the data necessary to define this module are not readily available for many of the processes. However, the Control Systems Laboratory of the U. S. Environmental Protection Agency has completed bench scale work on a chemical desulfurization process called the Meyers Process. A preliminary design of a large pilot plant to test this process has recently been published. Because of the availability of this data, Radian chose to base its chemical desulfurization of coal module on the Meyers Process.

The bench scale work on the Meyers Process was conducted on a high pyritic, low organic sulfur Appalachian coal. Results showed high pyritic sulfur removal, but essentially no organic sulfur removal. The developers of the process do not claim its applicability to producing low sulfur coal from coals with a high organic sulfur content. The feed for this module is an Illinois bituminous coal containing 2.4% pyritic sulfur and 1.2% organic sulfur. Therefore, the appropriateness of using the Meyers Process for this particular application may be questionable due to the high organic sulfur content of the coal feed being considered.

2.0 MODULE BASIS

For this study the environmental impacts resulting from the chemical desulfurization of coal are based on the production of 10^{12} Btu/day of desulfurized coal. The data needed to develop material balances for this size facility are taken from a report on the Meyers Process by L. Lorenzi Jr. (LO-096). Table 2-1 gives the proximate and ultimate analyses of the Illinois coal which is assumed to be used as plant feed and Table 2-2 gives the overall plant material balance.

TABLE 2-1

PROXIMATE AND ULTIMATE ANALYSES OF A TYPICAL ILLINOIS COAL

Proximate Analysis		Ultimate Analysis	
Ash	11.0	C	61.0
H_2O	11.	H_2	5.2
Volatile Matter	36.	N_2	1.4
Fixed Carbon	42.	O_2	6.8
Sulfur	3.6	S	3.6
Heating Value	11,000.	Ash	11.0
		H_2O	11.0
			100.0

Note: All numbers are wt. % except heating value which is Btu/lb coal.

TABLE 2-2

MEYERS PROCESS MATERIAL BALANCE

	Coal Feed	H_2SO_4	Oxygen	Fuel Coal	Product Coal	Sulfate Wastes	Sulfur By-Product
MPF Coal	43,716	-	-	4350	39,366	-	-
FeS_2	1,212*	-	-	15	136	-	-
S	-	-	-	1	10	-	454
$FeSO_4$	-	-	-	1	16	1662	-
$Fe(SO_4)_3$	-	-	-	5	43	1272	-
H_2SO_4	-	461	-	1	10	434	-
H_2O	5,553	8	-	175	1,581	995	-
O_2	-	-	1380	-	-	-	-
Binder	-	-	-	66	593	-	-
TOTAL	50,481	469	1380	4614	41,757	4363	454

Notes: (1) Basis is production of 10^{12} Btu/day of product coal.

(2) * - number reported as tons of sulfur.

(3) Units are tons/day

(4) Only important input and output streams are shown.

3.0 MODULE DESCRIPTION

Radian's chemical desulfurization of coal module is based on the Meyers Process. Table 3-1 gives the emissions and impacts of this module.

3.1 Processing Steps

The Meyers Process is based on chemically leaching FeS_2 from coal with an aqueous ferric sulfate solution. The FeS_2 is converted into free sulfur and dissolved iron sulfate. Ground coal is slurried with recycle iron sulfate solution and fed to the main reactor. In this vessel the pyritic sulfur in the coal is leached out and oxidized to free sulfur and ferrous sulfate by the ferric sulfate solution. Oxygen is simultaneously added to the vessel to regenerate the spent sulfate solution and maintain a high ferric ion concentration.

The main reactor output is sent to a concentrating hydroclone. The overflow from the hydroclone is recycled to the coal slurrying area while the underflow is sent to a coal/sulfate solution filter. The filter cake is sent to a sulfur extraction vessel where recycle solvent dissolves the free sulfur attached to the coal. The filtrate is recycled to the coal slurrying area with a slip stream being treated for sulfate removal in an evaporator.

The slurry from the sulfur extraction vessel is sent to a coal/solvent filter. The filtrate goes to decanters while the filter cake is further processed in a water wash vessel. The output of this vessel is sent to a coal/water filter from which the filtrate goes to decanters while the filter cake is sent to dryers. The dried coal product is then put in temporary storage or shipped directly (LO-096). Figure 3-1 shows the processing scheme for the Meyers Process.

TABLE 3-1

SUMMARY OF ENVIRONMENTAL IMPACTS
CHEMICAL DESULFURIZATION OF COAL

Basis: Production of 10^{12} Btu/day of Desulfurized Coal

Air (lb/hr)	
Particulates	344
SO_2	1,130
NO_x	3,460
CO	192
HC	58
Water (lb/hr)	
Suspended Solids	116
Dissolved Solids	18,500
Organic Material	50
Thermal (Btu/hr)	0
Solid Wastes (tons/day)	4,363
Land Use (acres)	121
Water Requirements (gal/day)	29.3×10^6
Occuptational Health (per year)	
Deaths	1.43
Injuries	28.6
Man-Days Lost	12,700
Efficiency (%)	
Primary Product Efficiency	90
Total Products Efficiency	90
Overall Efficiency	90
Ancillary Energy (Btu/day)	0

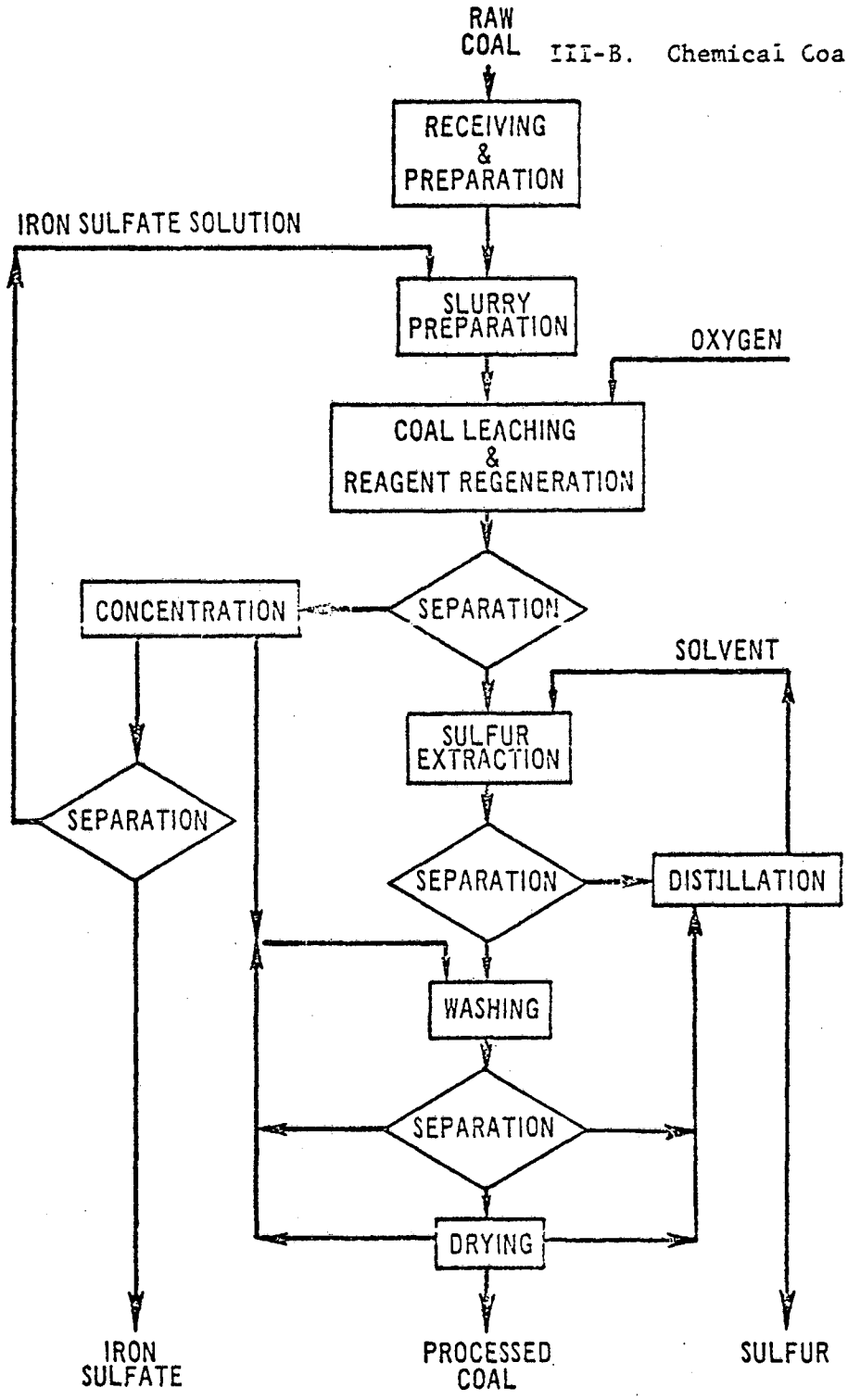

FIGURE 3-1 - SIMPLIFIED FLOW DIAGRAM OF MEYERS PROCESS

3.2 Ancillary Energy Requirements

The Meyers Process requires 5682 Kw of electrical power for a 120 ton/hr facility (LO-096). The air emissions associated with producing this electricity should be attributed to the desulfurization plant. Therefore, an onsite power plant is included in the desulfurization facilities. This system is assumed to have a 35% efficiency, 9750 Btu/Kw-hr, which means the heat rate to the boilers is 5.54×10^7 Btu/hr for a 120 ton/hr facility. Based on burning 12,000 Btu/lb product coal in the boiler, 37.2 tons/hr are required to produce 10^{12} Btu/day of desulfurized coal. Since all energy needs are satisfied internally by firing product coal, the ancillary energy requirements of this module are zero.

3.3 Products and By-Products

The primary product of a chemical desulfurization of coal facility is a low sulfur coal. Based on data from LO-096, a material balance was developed for the plant (see Table 2-2). From this calculation the heating value of the desulfurized coal product was found to be 12,000 Btu/lb. Therefore, the production of 10^{12}Btu/day of product is equivalent to 41,700 tons/day of desulfurized coal. The only saleable by-product produced from the Meyers Process is elemental sulfur. Based on the production of 41,700 tons/day of desulfurized coal, 454 tons/day of sulfur is produced. Table 3-2 shows the ultimate analysis of the chemically desulfurized coal product.

3.4 Raw Material Requirements

From Table 2-2, 50,500 tons/day of Illinois coal must be processed to produce 10^{12}Btu/day of desulfurized coal product.

TABLE 3-2

ULTIMATE ANALYSIS OF A CHEMICALLY DESULFURIZED ILLINOIS COAL

	Weight %
Ash	12.25
S	1.55
C	66.41
H_2	5.66
N_2	1.52
O_2	7.40
H_2O	3.79
Binder	1.42

The make-up water requirements for the Meyers Process supply four major needs: (1) process, (2) steam plant, (3) potable and (4) cooling tower make-up. Approximately 4990 gpm are required for the above items based on processing of 12,900 tons coal/day (LO-126). This is equivalent to a requirement of 2.82×10^7 gal/day for the production of 10^{12} Btu/day of desulfurized coal. Heat and material balance calculations for the electricity generation facilities indicate that 1.13×10^7 gal/day of additional make-up to the cooling system are required. Therefore, total water requirements for the chemical desulfurization facility are 2.93×10^7 gal/day.

3.5 Module Efficiencies

The primary product efficiency of a module is defined as the energy content of the primary product divided by the energy content of the feed. From Section 3.4, the amount of run-of-mine Illinois coal required to produce 10^{12} Btu/day of desulfurized coal is 50,500 tons/day. At 11,000 Btu/lb of coal, this is equivalent to 1.11×10^{12} Btu/day as feed to the facilities. Thus, the primary product efficiency is 90%.

The total products efficiency is defined as the energy content of all products and "fuel-type" by-products divided by the energy content of the feed. Since sulfur is the only by-product formed and it is not considered to be a fuel, the total products efficiency is equal to the primary product efficiency. The overall efficiency is defined as the energy content of all products and fuel by-products divided by the total energy input to the process, i.e., feed and ancillary energies. Since the ancillary energy needs of this module are zero, the overall efficiency of this module is equal to the primary product efficiency.

3.6 Land Usage

The land requirements for a facility capable of handling 12,900 tons/day of coal are 30.9 acres (LO-126). Linear scaling to a basis of 10^{12} Btu/day of desulfurized coal product gives land requirements of 121 acres.

3.7 Occupational Health

Since the Meyers Process is still in the developmental stage, data concerning injuries, deaths, and man-days lost are not available. For the purpose of this study, the occuptational data for chemical coal cleaning is assumed equal to that given for physical coal cleaning in Section III-A of this appendix.

4.0 MODULE EMISSIONS

4.1 Air Emissions

Air emissions from the Meyers Process are limited to the flue gas from the steam and electricity production units and miscellaneous sources. Because the Meyers Process is just now reaching the pilot plant stage, miscellaneous air emissions cannot be quantified. From Table 2-2, the coal rate to the steam and electricity production units is 4610 tons/day. This coal has a sulfur content of 1.55% and an ash content of 11.2%. Based on the above data and EPA emission factors for coal fired steam generators (EN-071), air emissions were calculated.

A limestone SO_2 scrubber is assumed to be employed to remove particulates (99% efficiency) and sulfur oxides (90% efficiency) from the flue gas. This is necessitated because the Meyers Process does not remove organic sulfur and the Illinois coal processed has a high organic sulfur content. If a low organic sulfur coal is treated by the Meyers Process, the need to treat the flue gas for sulfur oxide removal should be eliminated.

In order to evaluate the effect that particulates, SO_2, NO_x, CO and hydrocarbon emissions have on ambient air quality, it is necessary to define certain stack parameters used in calculating ambient pollutant concentrations. Boiler flue gas mass flow rates were calculated by assuming stoichiometric combustion with 25% excess air. The volumetric flow rate was based on an exit gas temperature of 250°F. The stack diameter was determined by assuming a gas exit velocity of 60 ft/sec. The stack height was assumed to be 500 ft.

4.2 Water Emissions

Water effluents were characterized by specifying flow rates, suspended solids, organic matter and total dissolved solids. The suspended solids and organic matter were calculated from an emission factor of 0.036 lb/10^6 Btu fired. Seventy percent of these emissions were assumed to be suspended solids with the remaining 30% being organic matter (BA-230). Based on a fuel rate of 4.61 x 10^9 Btu/hr to the steam/electricity production facility, suspended solids and organic matter are 116 and 50 lb/hr, respectively.

Total dissolved solids (TDS) were calculated by assuming a cooling tower blowdown rate and a TDS concentration of 10,000 ppm. The amount of blowdown from the steam production cooling tower is expected to be 5.13 x 10^6 gal/day (LO-126) and the amount resulting from electricity production is 2.05 x 10^5 gal/day based on mass and energy balances around its cooling system. Therefore, total cooling tower blowdown is 5.33 x 10^6 gal/day and the TDS of this stream is 18,500 lb/hr.

4.3 Solid Wastes

Solid wastes from the Meyers Process consist of the bottom ash from the steam boilers, the sludge from the limestone scrubber and iron sulfate wastes. From Table 2-2, 4363 tons/day of iron sulfate wastes are produced. The quantity of limestone SO_2 scrubber sludge is calculated from the following assumptions:

(1) the sludge wastes are assumed to be ponded and the settled composition is 60% sludge and 40% water

(2) the sludge consists of $CaSO_3 \cdot \frac{1}{2}H_2O$, $CASO_2 \cdot 2H_2O$, $Ca(OH)_2$ and ash,

(3) the sludge, ash excluded, contains 20% sulfur,

(4) the limestone SO_2 scrubber removes 90% of the flue gas sulfur and 99% of the particulate matter.

The bottom ash from the steam boilers is assumed to be 20% of the ash content of the coal fired.

Total solid wastes produced from the chemical coal desulfurization facilities are 4363 tons/day. It is assumed here that the plant is a minemouth operation and that no additional land is required for solid waste disposal if these wastes can be returned to the mine.

4.4 Thermal Discharges

Thermal discharges to water bodies are eliminated by utilizing wet cooling towers.

APPENDIX C

III-C. LOW BTU COAL GASIFICATION

1.0 INTRODUCTION

This section describes Radian Corporation's module for the production of low Btu fuel gas from coal. Low Btu fuel gas is a gas having a heating value of 150-300 Btu/scf which can be used as fuel in either a conventional boiler or a combined cycle generating plant.

Emission and efficiency data for low Btu gasification systems were prepared by Hittman Associates (HI-083). A considerable portion of Radian's analysis is based upon data gathered for Hittman's study.

1.1 Description of Low Btu Gasification Processes

There are several processes which have been developed specifically for the production of low Btu gas from coal, the Lurgi, Koppers-Totzek, Winkler, and Wellman-Galusha processes. The major distinguishing feature of these processes is the manner in which each system's gasifier operates, since the processing equipment located downstream of the gasifier is similar for each process.

1.1.1 Common Technology

Once a raw low Btu gas is produced, it must undergo two main processing steps to make it usable as a fuel. First, entrained solids and/or liquids must be removed by cooling and/or washing. This may be accomplished by many methods, of which cyclones, venturi scrubbers or direct quenches are a few examples. Following cooling and solids removal, CO_2 and/or H_2S must be removed. There are many proven industrial techniques available for removing CO_2 and H_2S. In this module, Radian has assumed the use of the Stretford process for H_2S removal and sulfur recovery.

In addition to the gas cleaning equipment just described, facilities must also be provided for the treatment of liquid waste streams and for the recovery of ammonia and hydrocarbon by-products. Included in these facilities will be a primary water treatment unit, a gas liquor treatment unit, an ammonia still, coal and by-product storage facilities, and in the case of medium Btu gasification, an oxygen plant.

1.1.2 Gasifiers

The major distinguishing feature of the various low Btu gasification processes is the design of the gasification reactor. In this vessel coal is reacted with oxygen and steam to produce a raw gas rich in CO and H_2 which can be purified and used as a boiler fuel. The differences between the processes are found in the operating temperatures, pressures and mechanical characteristics of the gasifier.

The reactions taking place in the gasifier are given by Equations 1-1 to 1-3.

$$\text{coal} \rightarrow CH_4 + \text{char} + \text{heat} \qquad (1\text{-}1)$$

$$C + H_2O + \text{heat} \rightarrow CO + H_2 \qquad (1\text{-}2)$$

$$2C + O_2 \rightarrow 2CO + \text{heat} \qquad (1\text{-}3)$$

The following paragraphs briefly describe the gasifiers of the Lurgi, Koppers-Totzek, Winkler and Wellman-Galusha processes.

Lurgi Process

The Lurgi gasifier is a moving bed, steam-air gasifier. Noncaking or slightly caking coal crushed to 1/8 x 1-1/4 inch particles is fed through a lock hopper and distributed in the gasifier via a revolving grate. Steam and air injected at the bottom of the gasifier are distributed through a second revolving grate which also provides bed support and regulates the ash removal rate. Ash is removed from the gasifier via a lock hopper and water quenched. Figure 1-1 shows the Lurgi gasifier.

The steam and oxygen from the air react with char in the reaction zone of the gasifier according to Equations 1-2 and 1-3 to produce heat and a low Btu gas. As this hot gas rises through the downward moving coal bed, the coal is devolatilized according to Equation 1-1. The temperature at the top of the gasifier is about 1100°F while the temperature at the bottom is about 1800°F. The gasifier operates at a pressure of 300-500 psi (FE-068).

Koppers-Totzek Process

The Koppers-Totzek gasifier is an entrained flow gasifier capable of treating all types of coal. Coal pulverized to 70% through a 200 mesh screen is fed to the gasifier with steam and air through coaxial burners at each end of the gasifier. Coal, oxygen and steam react according to Equations 1-1 to 1-3 at about 3300°F to produce a low Btu gas containing CO and H_2 with a small amount of CH_4. Part of the coal ash is slagged and removed from the bottom of the gasifier. The remaining ash and raw gas leave the top of the gasifier and are processed by the downstream equipment described in section 1.1.1. The gasifier pressure is approximately atmospheric (BO-117). Figure 1-2 shows the Koppers-Totzek gasifier.

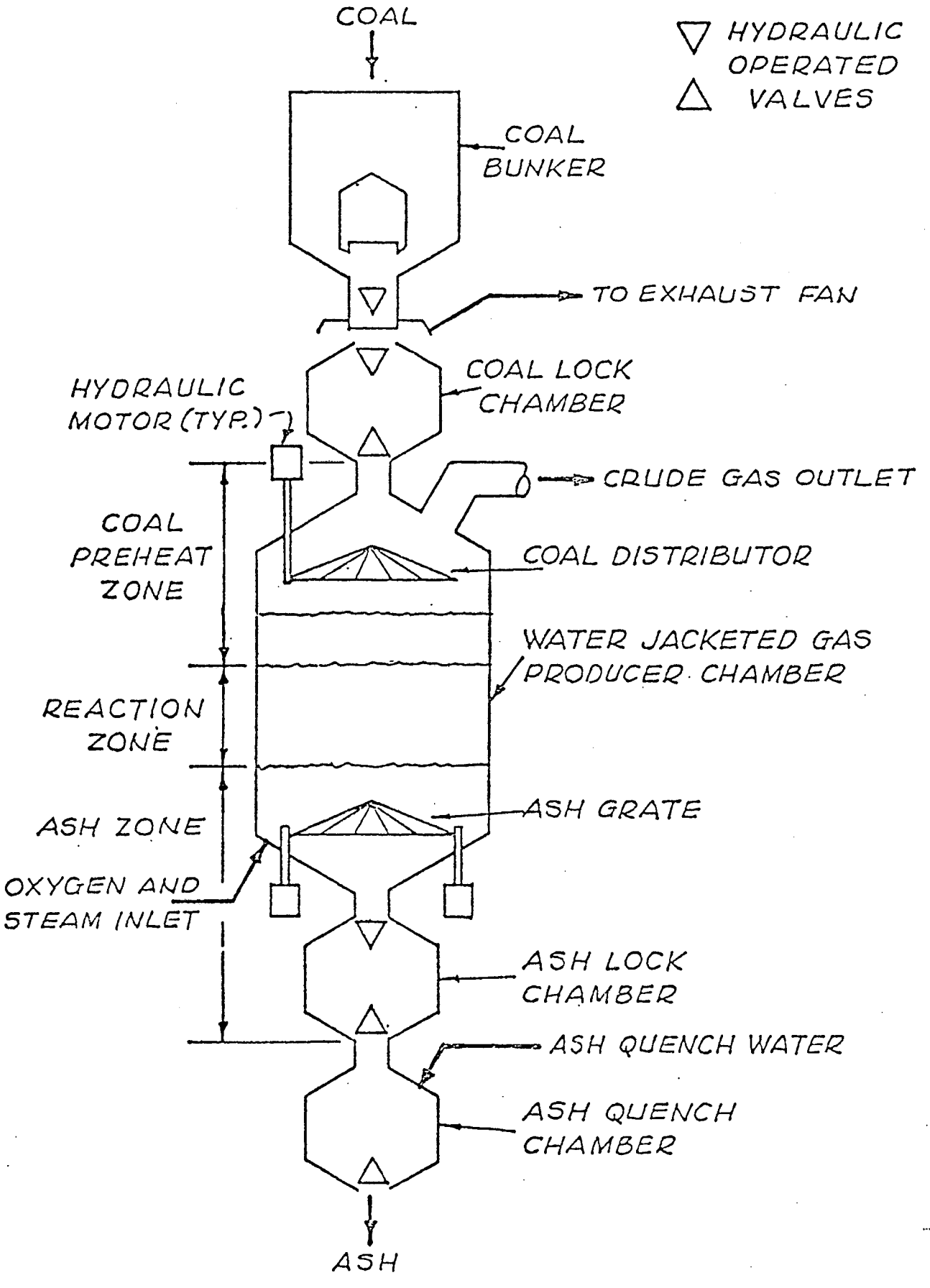

FIGURE 1-1 SCHEMATIC DIAGRAM OF LURGI GASIFIER

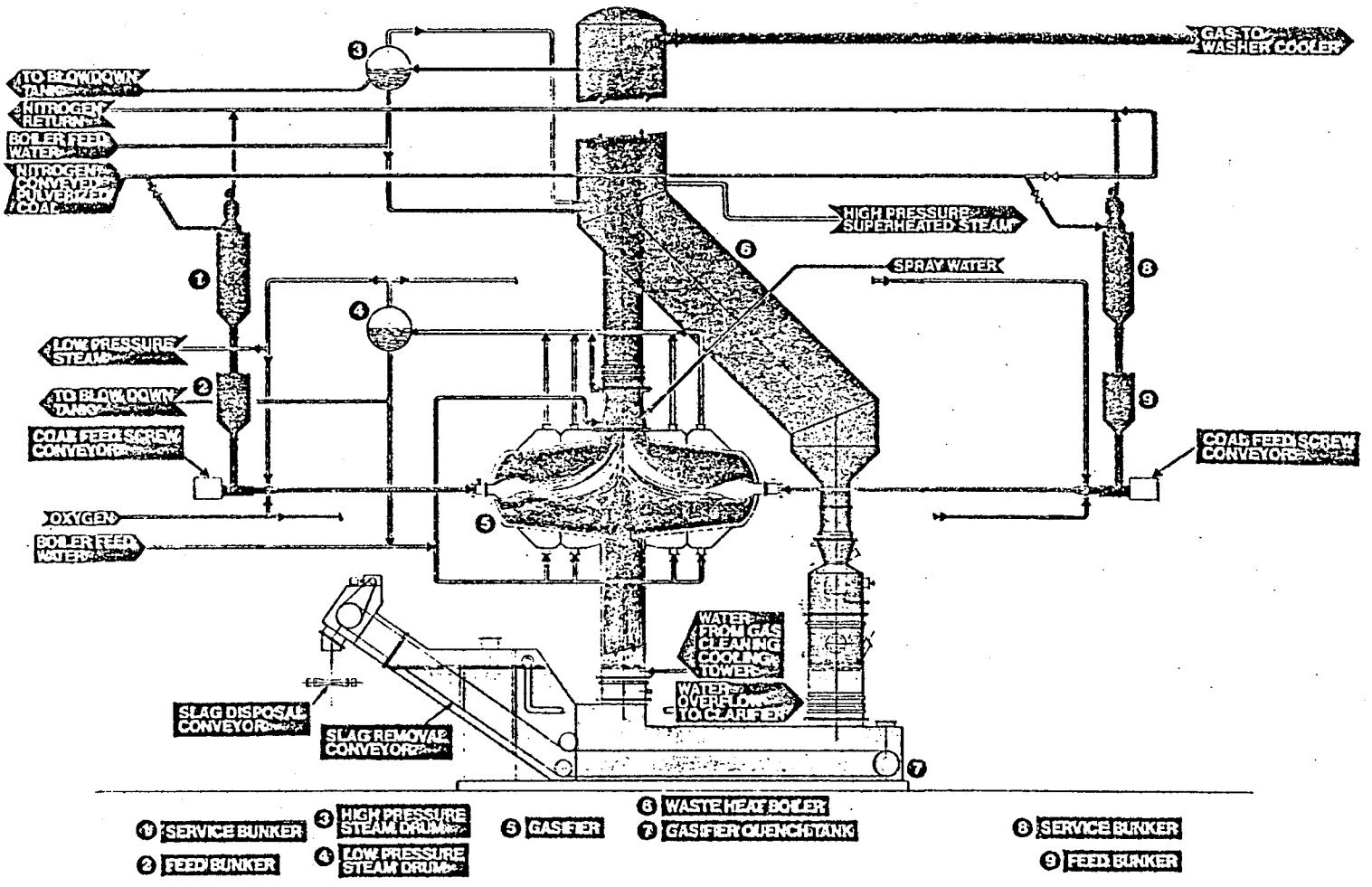

FIGURE 1-2 - K—T GASIFICATION AND HEAT RECOVERY

Winkler Process

The Winkler gasifier is a fluid bed, steam-air gasifier. Coal crushed to a 3/8 inch maximum diameter is dried and fed by screw conveyors to the gasifier. The coal undergoes reactions 1-1 to 1-3 to yield a raw gas rich in CO and H_2. The gasifier reaction temperature is 1500-1850°F and the pressure is about atmospheric. Thirty percent of the coal ash is removed from the bottom of the gasifier while about 70% is carried overhead with the raw gas. Above the fluid bed, additional steam and air are injected to react with the remaining carbon. The resultant gas is processed by the equipment described in Section 1.1.1 (BO-117). Figure 1-3 shows the Winkler gasifier.

Wellman-Galusha

The Wellman-Galusha gasifier is a moving bed, steam-air gasifier. Coal crushed and sized to 1/2 to 2 inch diameter is fed to the gasifier through a lock hopper and distributed over the coal bed by a rotating arm. The coal bed moves downward through the gasification zone, undergoing reaction 1-1. As the resulting char leaves the gasification zone and enters the combustion zone, it contacts steam and oxygen from air injected at the bottom of the gasifier and undergoes reactions 1-2 and 1-3. A revolving eccentric grate at the bottom of the gasifier allows for bed support and ash removal. A rotating agitator arm, located just below the coal bed, is used when handling slightly caking coals. Strongly caking coals must be pretreated to destroy their caking tendencies before gasification can be accomplished. The low Btu gas flows countercurrently to the coal bed and is removed from the top of the gasifier at approximately 1250°F. The gasifier operates at essentially atmospheric pressure (BA-260).

FIGURE 1-3

SCHEMATIC DIAGRAM OF WINKLER GASIFIER

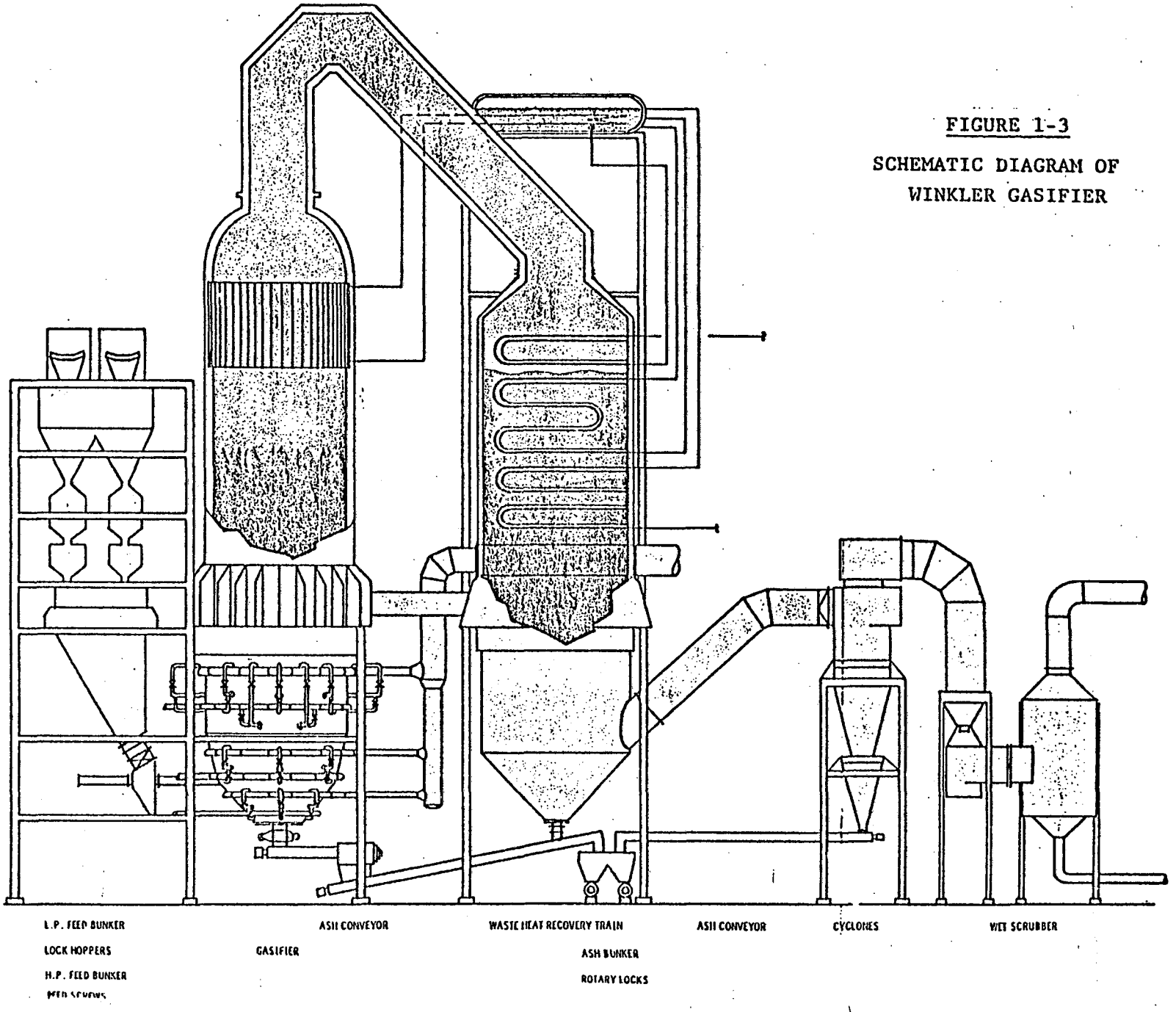

1.2 State-of-the-Art

The technology for making a low Btu gas from coal has been commercially available for 50 years (BA-158). The gasification process was originally developed in Europe to produce a low Btu fuel called "town gas" which was used to heat homes. In addition, this low Btu gas was used as a chemical feedstock for ammonia production. After the supply of natural gas to Europe increased, low Btu gas was relegated mainly to use as a chemical feedstock.

Because the U.S. has generally had an adequate supply of natural gas, little of the early development of low Btu gasification was performed in the U.S. However, with the impending worldwide shortage of natural gas, interest in low Btu gas as a fuel source has been renewed in both the U.S. and Europe. The following paragraphs briefly describe the development and present status of the Lurgi, Koppers-Totzek, Winkler and Wellman-Galusha processes.

Lurgi

The Lurgi process was developed in Germany in 1931. The major use of the low Btu gas produced was as "town gas" or a synthesis gas. Lurgi gasifiers are presently being used in the world's largest coal gasification plant located in Sasolburg, South Africa. A demonstration scale gas turbine power plant in Lunen, Germany utilizes the Lurgi gasifier while in the U.S. plans are completed or being completed for construction of several synthetic natural gas plants which employ the Lurgi process (BA-260, BA-158, EL-052).

Koppers-Totzek

The Koppers-Totzek process was developed in the late 1940's by Dr. F. Totzek of Koppers of Essen, Germany. In 1948 a pilot plant to test the new process was constructed at Louisiana, Missouri for the U.S. Bureau of Mines. This was a joint effort of Koppers of Essen, Germany and Koppers Pittsburgh. The pilot plant operated successfully for 2 years starting in May of 1949. With the increased use of oil and natural gas in the U.S. in the late 1940's, the gasification of coal became economically unattractive. However, in 1952 a commercial Koppers-Totzek gasification plant was installed in Finland with several more following in other parts of the world. Presently, 16 commercial plants utilizing the Koppers-Totzek gasifier have been built or are under construction (FA-083, BA-260).

Winkler

The Winkler process for gasification of coal was developed in 1926 by Bamag Verfahrenstechnik GmbH. This company is a German affiliate of Davy Powergas, Inc., the American licensor of the Winkler process. The process was originally used to produce a low Btu "town gas" and to provide a chemical feedstock for the manufacture of methanol, ammonia and oil by Fischer-Tropsch synthesis. At the present time 16 commercial plants have been built which use the Winkler process (BA-260, BO-117).

Wellman-Galusha

The Wellman-Galusha process was developed by McDowell Wellman of Cleveland, Ohio. The process was originally used to produce a fuel gas suitable for industrial needs including kiln firing in the ceramics industry and process fuel requirement in the metals and glass industry. Presently, two plants in the U.S. still employ the Wellman-Galusha process in a regular or stand-by operational mode (BA-260, BO-117).

2.0 MODULE BASIS

Of the four commercial low Btu gasification systems considered in this study, the Lurgi process is the best documented. For this reason, the Radian module for low Btu gasification is based primarily on data generated by Hittman Associates (HI-083) for a Lurgi plant. The use of this data does not imply advocation or approval of the Lurgi process. In fact, data from other processes are used when necessary to generate information which is considered to be representative of low Btu gasification systems in general.

Hittman's data are calculated on a basis of 10^{12} Btu of coal input to the gasification plant. Because of the nature of this study, Radian feels that an output basis is more appropriate. The Hittman data are easily transformed from an input basis to an output basis by dividing by the process efficiency.

In Section 3.0, discussions of typical low and medium Btu gasification facilities are presented. Module emissions are defined in Section 4.0.

3.0 MODULE DESCRIPTION

Low Btu gasification module emissions and impacts are developed using one coal feed, an Illinois coal. A general low Btu gasification module is described. For the purpose of this study, air is assumed to be utilized in the gasifier as the source of oxygen for the low Btu gasification module. Table 3-1 is a summary of the emissions and impacts of a low Btu gasification plant which utilizes Illinois coal.

3.1 Processing Steps

The processing units for Radian's low Btu gasification module consists of the following:

(1) coal pretreater,
(2) gasifier,
(3) solids and liquids removal,
(4) acid gas removal and sulfur recovery.

In addition, an auxiliary boiler, gas liquid treater, ammonia recovery unit and storage facilities are included.

3.2 Raw Material Requirements

Based on a primary product efficiency of 75.8% (see Section 3.5), 1.32×10^{12} Btu/day of coal is required as feed to the gasifier to produce 10^{12} Btu/day of low Btu fuel gas. Table 3-2 gives the proximate and ultimate analyses of the coal used in Radian's study. Based on these coal heating rates, 60,000 tons/day of Illinois coal is required.

TABLE 3-1

SUMMARY OF ENVIRONMENTAL IMPACTS

LOW BTU GASIFICATION OF ILLINOIS COAL

Basis: Production of 10^{12} Btu/day of Low Btu Fuel Gas

Air (lb/hr)	
Particulates	0.86
SO_2	2250
NO_x	1130
CO	32.3
HC	32.5
NH_3	45.4
Water (lb/hr)	
Suspended Solids	0
Dissolved Solids	0
Organic Material	0
Thermal (Btu/hr)	0
Solid Wastes (tons/day)	7320
Land Use (acres)	750
Water Requirements (gal/day)	11.0×10^6
Occupational Health (per year)	
Deaths	0.71
Injuries	14.2
Man-Days Lost	7500
Efficiency (%)	
Primary Product Efficiency	75.8
Total Products Efficiency	83.9
Overall Efficiency	83.9
Ancillary Energy (Btu/day)	0

TABLE 3-2

ANALYSES OF AN ILLINOIS BITUMINOUS COAL

Proximate Analysis		Ultimate Analysis	
Ash	11	C	61.0
H_2O	11	H_2	5.2
Volatile Matter	36	N_2	1.4
Fixed Carbon	42	O_2	6.8
Sulfur	3.6	S	3.6
Heating Value	11,000	Ash	11.0
		H_2O	11.0
			100.0

Note: All numbers are wt. % except heating value which is Btu/lb coal.

Water requirements for the low Btu gasification plant are 7900 gpm or approximately 11 x 10^6 gal/day. These numbers are calculated by summing the water requirements for the low Btu gas from El Paso's proposed gasification plant and adjusting to a 10^{12} Btu production basis (EL-052).

3.3 Ancillary Energy Needs

From the Hittman report (HI-083), the ancillary energy needs of a low Btu gasification plant are 3.58×10^6 kwhr/10^{12} Btu of fuel gas produced. There are several ways in which this energy need can be satisfied. Electricity may by purchased from a nearby power plant or it may be generated on site by burning coal, product gas or by-product hydrocarbons. Radian chose to burn a portion of the tar oils formed during gasification to satisfy the ancillary energy needs. This method allows environmental emissions to be properly attributed to the gasification plant and not the power plant.

The auxiliary boiler is assumed to be 37% efficient (9224 Btu/kwhr). Thus, the heat rate to the auxiliary boiler is 1.375×10^9 Btu/hr. Since all energy needs can be internally satisfied by firing tar oils in the auxiliary boiler, no ancillary energy is considered needed for the gasification process.

3.4 Products and By-Products

Several saleable by-products are recovered from the low Btu gasification plants. These include naphthas, tars, tar oils, phenols, ammonia and sulfur. Table 3-3 lists the amounts of by-products recovered from a plant producing 10^{12} Btu/day of gas (BA-158, EL-052). The tar oils have been

TABLE 3-3

BY-PRODUCTS FROM LOW BTU GASIFICATION OF COAL

By-Product	Low Btu Gasification of Illinois Coal
Naphtha	42,500
Tar Oils	189,000
Tar	23,300
Phenols	24,000
NH_3	45,400
Sulfur	16,800

Note: (1) Numbers are in lb/hr.

(2) Basis is production of 10^{12} Btu/day of primary gas product.

reduced by 7.99×10^4 lb/hr to account for fuel used by the auxiliary boiler. The total heat value of the saleable hydrocarbon by-products is 4.45×10^9 Btu/hr from low Btu gasification of Illinois coal (BA-158, EL-052).

3.5 Efficiency

It is possible to express the efficiency of a process in several different ways. In this study, three different efficiency terms are used. These are the primary product efficiency, the total product efficiency and the overall efficiency. The primary product efficiency is defined as the energy content of the primary product divided by the energy content of the feed. For low Btu gasification Hittman (HI-083) gives the primary product efficiency as 75.8%.

The total product efficiency is defined as the energy content of all products and by-products divided by the energy content of the feed. The overall efficiency is defined as the energy content of all products and by-products divided by the total energy input to the process, i.e., feed and ancillary energies. Since there are no ancillary energy requirements for low Btu gasification, the overall and total product efficiencies are equal.

3.6 Land Usage

Land requirements for a low Btu gasification plant are based on 50.4 acres needed for a plant capable of producing 6.73×10^{10} Btu/day of fuel gas (HI-083, EL-052). On a 10^{12} Btu/day output basis, this yields a land requirement of 750 acres.

3.7 Occupational Health

The data on injuries, deaths and man-days lost for the low btu gasification module are taken directly from Battelle (BA-230). These numbers are converted from Battelle's basis of 10^6 Btu of low Btu gas production to Radian's basis of 10^{12} Btu/day.

4.0 MODULE EMISSIONS

4.1 Air Emissions

Air emissions from a low Btu gasification system come from the sulfur recovery unit, the auxiliary boiler and storage. The Stretford process is chosen as the method used to remove H_2S from the raw fuel gas stream. This process gives 94% sulfur removal, with 99.4% recovery of the sulfur (HI-083). The auxiliary boiler is fired with by-product tar oils having a sulfur content of 1.3% (BA-158). A limestone scrubber is utilized to reduce SO_2 and particulate emissions. The scrubber is 90 and 99% efficient in removing SO_2 and particulates, respectively.

The sulfur emissions from the sulfur recovery unit are calculated from a sulfur material balance. The air emissions from the auxiliary boiler are calculated from "Compilation of Air Pollutant Emissions Factors" (EN-071), tar oils feed rate and sulfur content. Storage emissions are assumed to occur from the ammonia and naphtha by-products. Emissions are calculated using storage capacity data and emission factors from (EN-071). The ability of a gasification process to limit its air emissions to those given above will depend to a large extent on the prevention of fugitive emissions from pump seals, joints, flanges, etc.

In order to evaluate the effect that particulates, SO_2, NO_x, CO and hydrocarbon emissions have on ambient air quality, it is necessary to define certain stack parameters used in calculating ambient air pollutant concentrations. Table 4-1 lists the air emissions and stack parameters for the individual emission sources of a low Btu gasification plant.

TABLE 4-1

LOW BTU COAL GASIFICATION MODULE

AIR EMISSIONS AND STACK PARAMETERS

Basis: 10^{12} Btu of Fuel Gas Output/Day

Source	Heat Input MM Btu/Hr	Fuel	Emissions lbs/hr						Stack Parameters					
			Particulates	SO_2	Total Organics	CO	NO_x	NH_3	Mass Flow lbs/hr	Volumetric Flow ACFM	Velocity FPS	Height Ft.	Temperature °F	Diameter Ft.
Illinois Coal														
A. Auxiliary Power	1,380	Tar Oils	0.863	220	32.3	32.3	1130	-	1.65×10^6	0.502×10^6	60	500	250	13.3
B. Sulfur Recovery	55,000		-	2030	-	-	-	-	12,500	4560	60	300	450	1.27
C. Storage			-	-	0.219	-	-	45.4				50		
TOTAL			0.863	2250	32.5	32.3	1130	45.4						

Mass and volumetric flow rates are calculated from material balances. Stoichiometric mass flows shown in Table 4-1 were calculated from material balances assuming stoichiometric combustion with 25% excess air (75% for the sulfur recovery flare). Volumetric flow rates were based on assumed exit gas temperatures. Stack heights, gas velocities, and exit temperatures were assumed, while stack diameters were calculated from the gas velocities and volumetric flow rates.

4.2 Water Emissions

Water emissions from the low Btu gasification module were assumed to be equal to those from SNG-from-coal processes. These wastes are discussed in module writeup III-D.

4.3 Solid Wastes

Solid wastes from a low Btu gasification plant consist of coal ash, primary water treatment sludge, ammonia still wastes and limestone scrubber sludge. The scrubber sludge is assumed to consist of 40% water and 60% solids. The solids contain ash, $CaSO_4 \cdot 2H_2O$ and $CaSO_3 \cdot \frac{1}{2}H_2O$ (solids, ash excluded, are 20% sulfur). The amount of primary treatment sludge is calculated from (1) intake water requirements, (2) the assumption that 500 ppm of suspended solids is present in the make-up water, and (3) all suspended solids are removed by treating. The amount of coal ash produced is calculated from coal rates and ash content. Ammonia still wastes are calculated using ammonia recovery rates and the following factor: 469 tons of still wastes are formed per 416 tons of ammonia recovered (HI-083).

The low Btu gasification plant is expected to be a mine mouth operation and hence, all solid wastes are expected to be disposed of as mine fill.

4.4 Thermal Discharges

Thermal discharges to water bodies are eliminated by utilizing wet cooling towers. If an adequate supply of water is not available, air cooled condensers could replace wet cooling towers.

APPENDIX C

III-D. HIGH BTU COAL GASIFICATION

1.0 INTRODUCTION

This section describes Radian Corporation's module for the production of substitute natural gas (SNG) from coal. Candidate systems for this module included:

(1) The Lurgi Process

(2) The Institute of Gas Technology HYGAS Process

(3) The Bituminous Coal Research BI-GAS Process

(4) The Bureau of Mines Synthane Process

(5) The Consolidation Coal Company CO_2 Acceptor Process

There are additional SNG-from-coal processes which are undergoing investigation. These include: (1) the Battelle/Union Carbide, Agglomerating Ash Process, (2) the Kellogg Molten Salt Process, and (3) the Garrett Process and others. These processes are less developed than the ones mentioned above and hence were given no consideration as candidates for the SNG-from-coal module. However, this is not to imply that any of these less developed processes cannot become commercial realities.

Hittman Associates, Inc., have compiled environmental impact and efficiency data for all of the above processes (HI-083). These data, supplemented or corrected with data from other sources, was used to define the SNG-from-coal module described here.

1.1 Description of Candidate Processes

The various candidate processes for high BTU coal gasification contain many similar processing units. The major distinguishing feature of the processes is the gasifier section. The various processing steps in coal gasification are explained in the following sections.

1.1.1 Common Technology

All SNG-from-coal processes utilize some kind of a gasifier to produce a synthesis gas which contains CH_4, CO, H_2O, H_2, and CO_2. After leaving the gasifier, the synthesis gas goes through several processing steps to upgrade it to pipeline quality gas. Figure 1-1 is a general schematic of the gasification process. While the specific means of accomplishing the gas processing steps may vary from process to process, the basic principles of each step are common to all processes.

1.1.1.1 Solids Separation and Cooling

Synthesis gas produced during coal gasification can contain

- dust
- coal fines
- carbon char
- tars
- oils
- phenols.

To prevent plugging of the shift reactor and poisoning of downstream catalysts, the synthesis gas is cleaned of all solids. Conventional processing equipment can be used to accomplish this,

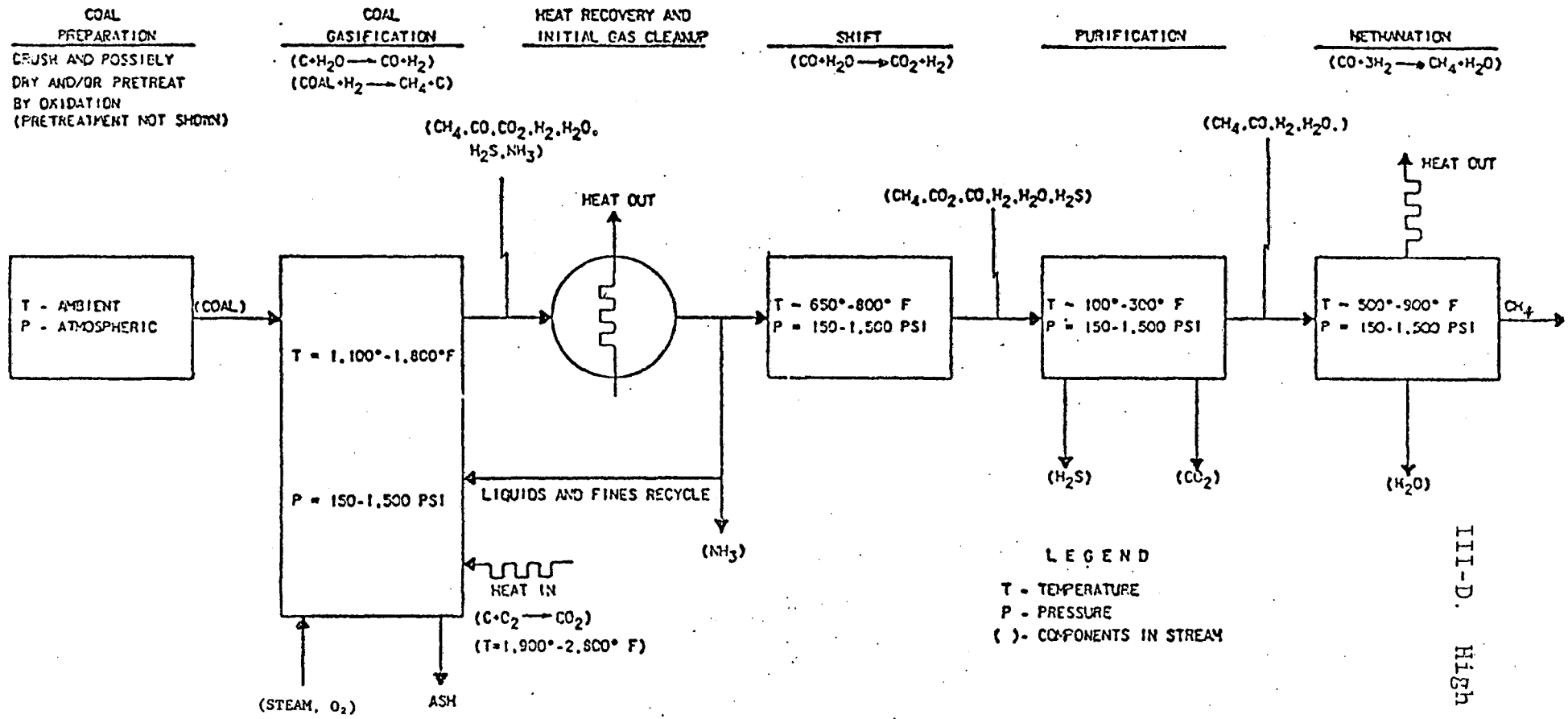

FIGURE 1-1

SCHEMATIC REPRESENTATION OF FUNDAMENTAL GASIFICATION STEPS FOR COAL TO PIPELINE GAS PROCESSES

however, some of the commercially available treatment methods may have to be refined to ensure essentially 100% solids removal. Typical methods would include dry cyclones, wet cyclones, venturi scrubbers, quenchers, bag filters, etc. Each SNG process uses the kind of solids removal device best fitted to its particular processing scheme and gas contaminants.

In addition to solids removal before the shift reactor, the synthesis gas is cooled to 550-650°F. This is necessary to avoid excessively high temperatures in the shift reactor due to the exothermic water gas reaction. The use of water wash columns, direct quenches, venturi scrubbers and/or heat exchangers has been proposed for cooling the synthesis gas prior to its entering the shift reactor.

1.1.1.2 Shift Reactor

Synthesis gas is upgraded to SNG by catalytic methanation via Equation (1-1).

$$CO + 3H_2 \rightleftharpoons CH_4 + H_2O + \text{heat} \qquad (1\text{-}1)$$

Optimum methane yield requires a 3:1 ratio of hydrogen to carbon monoxide. In most raw synthesis gases, this ratio is about 1:1 or lower. To obtain the desired ratio of H_2:CO, steam is added to the synthesis gas and the H_2:CO ratio is catalytically shifted according to the water gas reaction given by Equation (1-2) to give the desired 3:1 ratio.

$$CO + H_2O \rightleftharpoons CO_2 + H_2 + \text{heat} \qquad (1\text{-}2)$$

This reaction system is currently used in several industrial applications, for example, in the production of ammonia. However, in the ammonia system, the CO content of the gas is much lower than that found in coal gasification synthesis gas. Work has been done and still needs to be done to develop new

shift reactor catalysts and methods of operating the shift reactor.

The need to find a new catalyst arises because of the reducing tendencies of the high CO content of the synthesis gas. This causes the metal oxide catalysts employed to be reduced to the elemental metal which will then catalyze the methanation reaction, Equation (1-1). This reaction is highly exothermic and will cause hot spots in the reactor bed and damage the catalyst. To offset the reducing effect of CO, large quantities of steam, which has an oxidative effect, are added. However, steam has adverse effects on the mechanical strength of the catalyst. A 1:1 ratio of steam to dry gas has been recommended by catalyst manufacturers as the best shift reactor feed (AI-013).

The shift reactor may be operated in one of two ways. The total gas stream can be shifted to the desired H_2:CO ratio or part of the gas stream can be shifted to a higher H_2:CO ratio which when combined with the bypass stream will yield the desired H_2:CO ratio. Because of catalyst considerations, i.e., a 1:1 stream to dry gas ratio, the bypass method appears to be the best procedure (AI-013). However, this method will create a high exit gas temperature and necessitate quenching of the effluent stream to prevent carbon deposition from the Boudouard Reaction, Equation (1-3).

$$2CO \rightleftharpoons CO_2 + C \qquad (1\text{-}3)$$

1.1.1.3 Acid Gas Removal

Prior to catalytic methanation, the synthesis gas must be cleaned of sulfur compounds and CO_2. The sulfur will poison the methanation catalyst, while CO_2 will result in excess CO in the product SNG by lowering the H_2:CO ratio by reacting with hydrogen according to Equation (1-4).

$$CO_2 + 4H_2 \rightleftharpoons CH_4 + 2H_2O \qquad (1\text{-}4)$$

The types of acid gas removal units available can be classified as selective or nonselective. Nonselective removal produces an acid gas stream very dilute in H_2S which is unacceptable as a feed stream to a conventional Claus unit. Selective acid gas removal produces a more concentrated H_2S stream that can be treated by a conventional Claus unit and a CO_2 rich stream which can be vented to the atmosphere. Selective removal systems include (1) the Benfield activated, hot carbonate system, (2) the HIPURE process, (3) the Rectisol cold methanol absorption process and others. Sulfur guards are generally used to remove any residual sulfur that escapes the acid gas removal system. These are usually beds of ZnO which react with H_2S to yield ZnS which is then discarded.

1.1.1.4 Sulfur Recovery

The use of a selective acid gas removal system allows sulfur to be recovered as elemental sulfur via a conventional Claus unit. Claus units recover elemental sulfur by the following reactions:

$$2H_2S + 3O_2 \rightleftharpoons 2SO_2 + 2H_2O \qquad (1\text{-}5)$$

$$2H_2S + SO_2 \rightleftharpoons 3S + 2H_2O \qquad (1\text{-}6)$$

Sulfur removal efficiencies up to 97% can be obtained. If needed, the Claus unit tail gas can be further treated by SO_2 scrubbers to meet environmental standards.

1.1.1.5 Catalytic Methanation

Synthesis gas which has been treated for acid gas removal and has had its H_2:CO ratio adjusted to approximately 3:1 must be catalytically methanated to yield pipeline quality SNG. The methanation reaction is given by Equation (1-1).

$$CO + 3H_2 \rightleftharpoons CH_4 + H_2O + \text{heat} \qquad (1\text{-}1)$$

This reaction is strongly exothermic, giving off 49.3 Kcal/g-mole. Two important considerations in the design of the methanator are (1) a heat removal technique to limit the gas exit temperature to around 850°F and (2) a suitable catalyst to methanate a feed stream that contains a high content of carbon monoxide.

Several possible systems for methanation have been proposed. The first involves spraying the catalyst on the outside of tubes, with cooling fluid being circulated inside the tubes. The synthesis gas passes over the catalyst and undergoes methanation. The heat of reaction liberated is carried away by the cooling fluid. Problems have occurred in retaining catalyst activity for sufficient periods of time. A second method employs a system of catalytic reactors with intercooling equipment. A major drawback to this method arises because of temperature profile shifts which occur during start-up, shutdown, and periods of reduced gas flow. A third system utilizes a large recycle stream of cooled product to reduce the gas stream reactant concentrations. This method has economic ramifications due to the increased converter size requirement.

The methanation reaction is a well-known reaction with widespread use in the ammonia synthesis industry. However, the coal gasification synthesis gas which must be methanated is considerably more concentrated with CO and H_2 than in any previous application. Studies need to be performed to demonstrate the reliability of the methanation catalyst. Catalysts proposed for use include nickel and molybdenum.

1.1.1.6 Drying

The SNG product from the methanator contains water which must be removed to meet pipeline specifications. Technology in this area is industrially proven and any of several methods are acceptable, of which, glycol absorption is one example.

1.1.2 Gasifiers

The major distinguishing feature of the various gasification processes lies in the gasifier section. In this section raw coal is reacted to produce a synthesis gas which can be upgraded to pipeline quality gas. The differences between the processes are found in the operating temperatures, pressures, mechanical characteristics of the gasifier and the means of supplying heat for the gasification reactions, Equations (1-7) to (1-10).

$$\text{Coal} \rightarrow CH_4 + \text{Char} + \text{Heat} \qquad (1\text{-}7)$$

$$C + 2H_2 \rightarrow CH_4 + \text{Heat} \qquad (1\text{-}8)$$

$$C + H_2O + \text{Heat} \rightarrow CO + H_2 \qquad (1\text{-}9)$$

$$2C + O_2 \rightarrow 2CO + \text{Heat} \qquad (1\text{-}10)$$

The following paragraphs briefly describe the gasifiers of the Lurgi, HYGAS, BI-GAS, Synthane and CO_2 Acceptor Processes.

Lurgi Process

The Lurgi gasifier is a moving bed, stream-oxygen gasifier. Noncaking or slightly caking coal is crushed to yield a feed of 1/8 x 1¼ in. particles. This coal is fed through a lock hopper and distributed in the gasifier via a revolving grate. Steam and oxygen injected at the bottom of the gasifier are distributed through a second revolving grate which also provides bed support and regulates the ash removal rate. Ash is removed from the gasifier via a lock hopper and water quenched.

The steam and oxygen react with char according to Equations (1-9) and (1-10) to produce heat and synthesis gas. This gas rises while the coal bed moves downward. As the coal enters the top of the gasifier, it devolatilizes according to Equation (1-7) with further methane being formed from Equation (1-8). The temperature at the bottom of the gasifier is about 1800°F, while the temperature at the top of the gasifier is about 1100°F. The Lurgi gasifier operates at a pressure of 300-500 psi (FE-068). Figure 1-2 shows the Lurgi gasifier.

HYGAS Process

The HYGAS gasifier section consists of:

(1) coal pretreatment,

(2) slurry preparation,

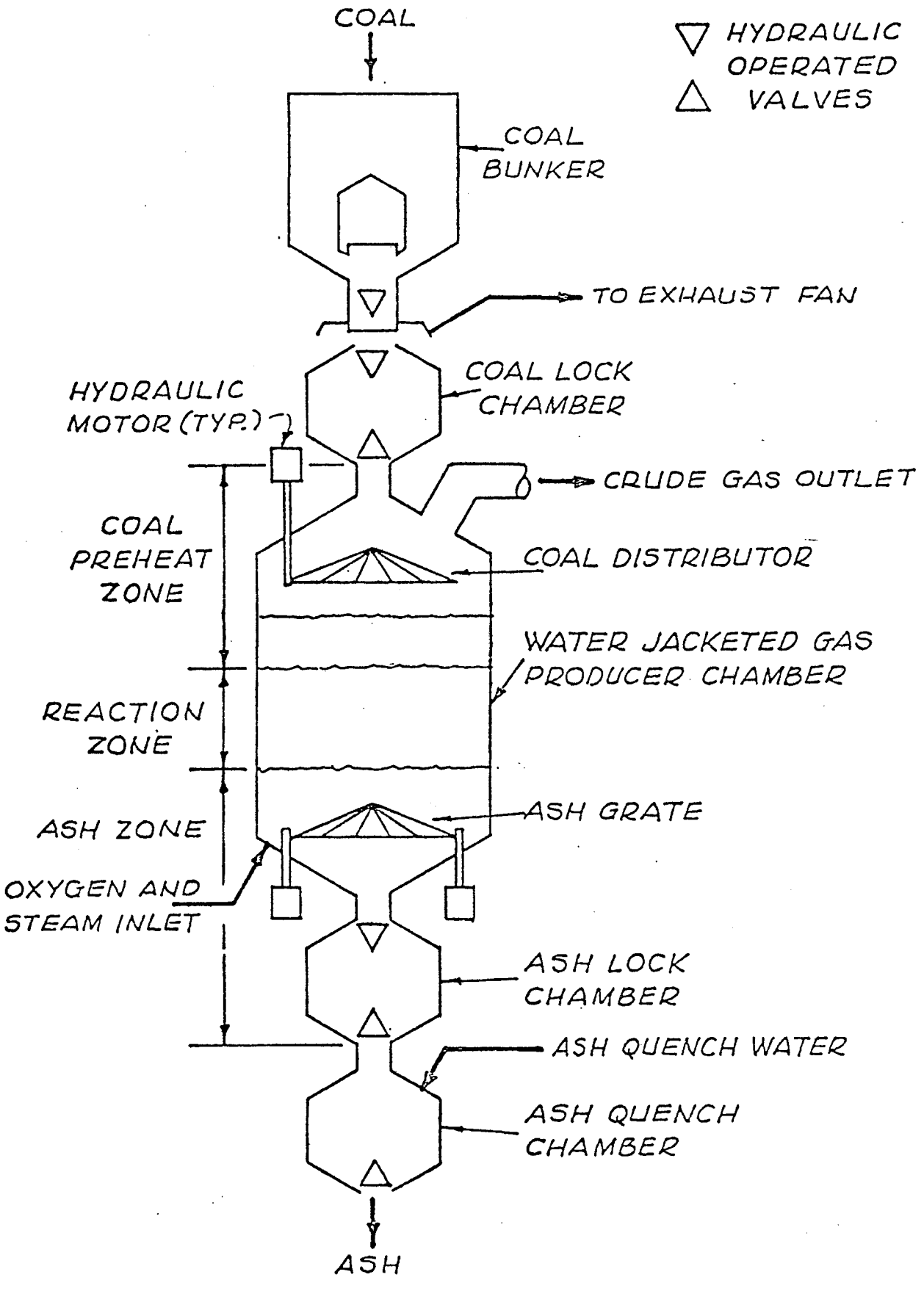

FIGURE 1-2

SCHEMATIC DIAGRAM OF LURGI GASIFIER

(3) a fluidized bed, two stage gasifier, and

(4) hydrogen production.

The HYGAS gasifier is unique in that it utilizes a hot hydrogen-rich gas stream to supply heat for the endothermic reaction of Equation (1-9). Coal is crushed to -8 + 100 mesh size and fed to the pretreater where the caking tendencies of the coal are destroyed by a hot air stream. The treated coal is then mixed with a light oil formed in the gasifier and injected into the top of the gasifier in a slurry form. At the top of the gasifier the light oil evaporates and the dried coal falls into the upper part of the gasifier. The coal reacts with rising hot synthesis gas and undergoes reactions (1-7) and (1-8) at a temperature of 1300-1500°F.

The hydrogen-rich gas and steam injected into the bottom of the gasifier react with the char formed in the upper stages of the gasifier according to Equation (1-8) to form methane concurrently with the formation of CO and H_2 from the steam-carbon reaction, Equation (1-9). The lower portion of the gasifier operates at 1700-1800°F. The gasifier pressure is 1000-1500 psi.

Unreacted char from the bottom of the gasifier is sent to a hydrogen-rich gas generator where it is reacted with steam to yield H_2 and CO. Heat for this reaction can be supplied by electrifying the char (FE-068). Figure 1-3 is a schematic of the HYGAS system.

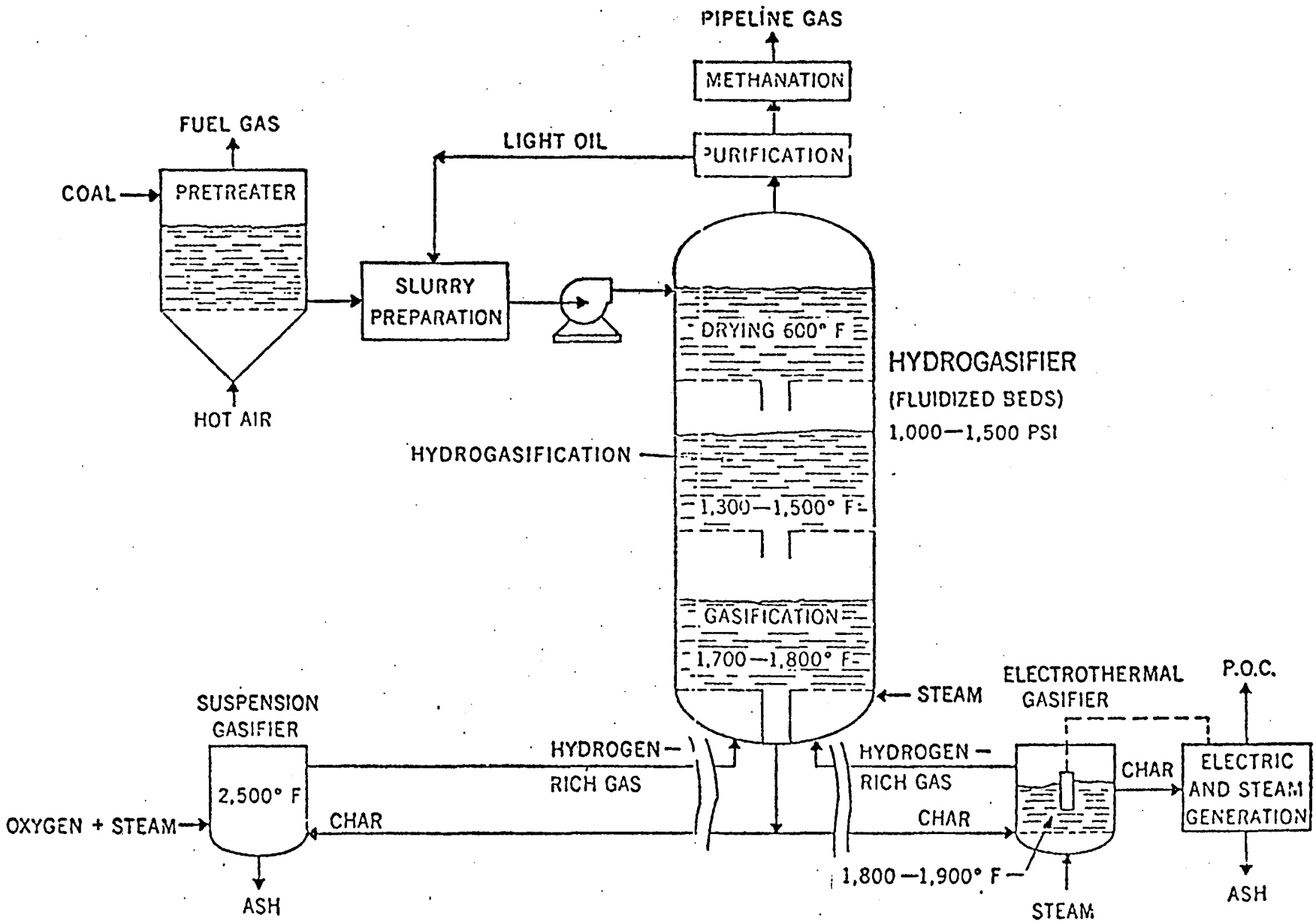

FIGURE 1-3 - SCHEMATIC DIAGRAM OF HYGAS PROCESS

BI-GAS Process

The BI-GAS gasifier section consists of

(1) coal pretreatment,

(2) a two stage, high pressure gasifier, and

(3) a char separation cyclone.

Coal is crushed and dried until 70% is -200 mesh. This is fed, along with steam, to the first stage of an entrained flow gasifier. Upon contact with the hot synthesis gas rising from Stage 2, the coal rapidly undergoes devolatilization to produce methane and an active carbon char. This active char reacts with steam according to Equation (1-9) to yield more synthesis gas. The char and gas are swept out of the top of the gasifier to the char separation cyclone where the char is removed and returned, along with steam and oxygen, to the second stage of the gasifier. In this lower stage of the gasifier, the carbon char reacts according to Equations (1-9) and (1-10) to produce a hot synthesis gas which rises to the first stage and provides heat for further production of synthesis gas from Reaction 1-9. Molten slag is removed from the bottom of the gasifier and water quenched. The Stage 1 reaction temperature is about 1700°F, while, the Stage 2 temperature is 2700°F. The gasifier operates at 1000-1500 psi (FE-068). Figure 1-4 schematically shows the BI-GAS system.

Synthane Process

The Synthane Process utilizes a two stage, fluidized bed gasifier with a free-falling pretreatment stage. Coal crushed to 70% through -200 mesh is fed to the top of the gasifier.

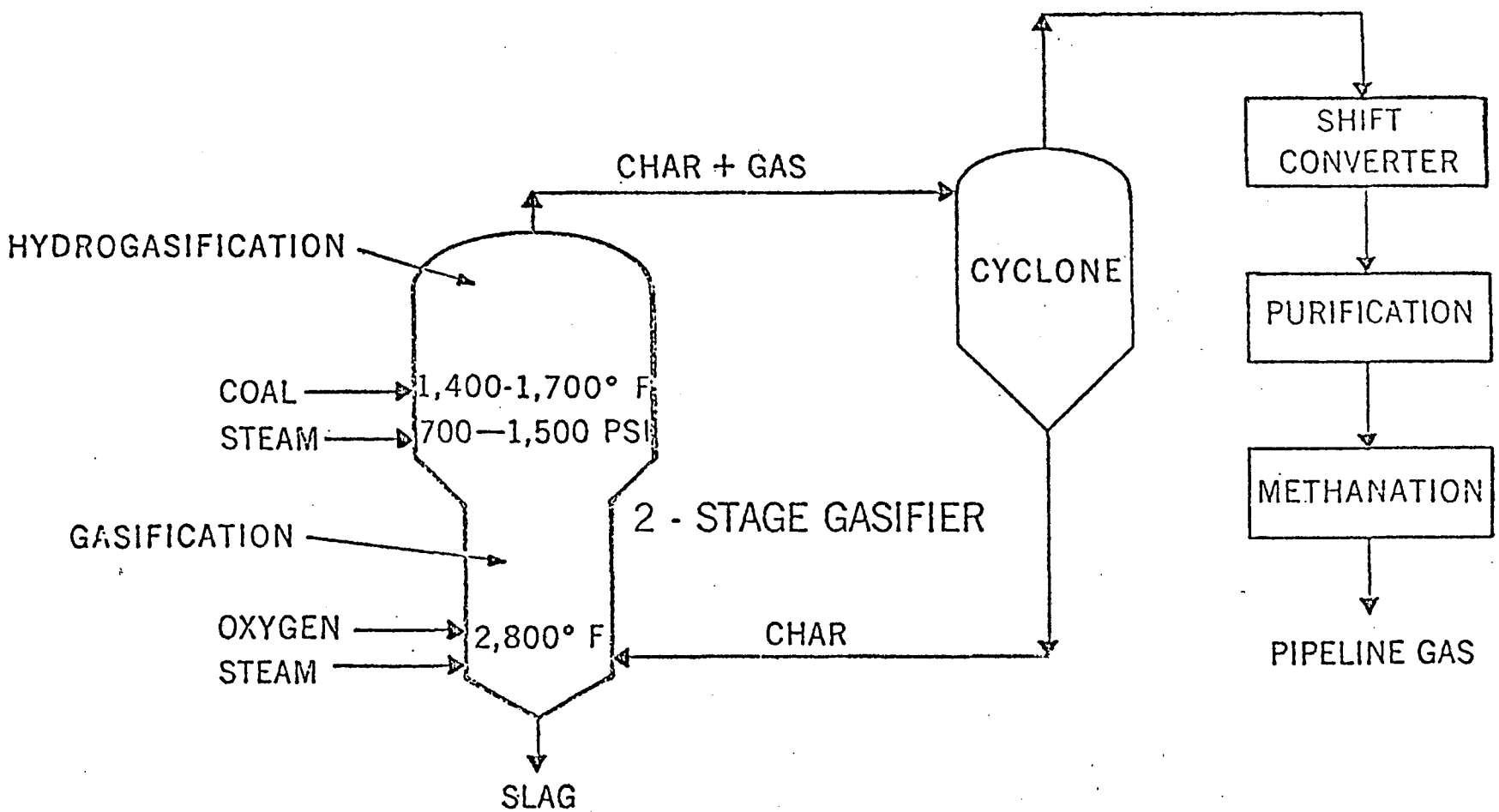

FIGURE 1-4

SCHEMATIC DIAGRAM OF THE BI-GAS PROCESS

Here it reacts with steam and oxygen in a free-falling manner that destroys the caking properties of the coal in addition to partially devolatilizing the coal. After pretreatment the coal enters the hydrogasification stage of the gasifier and then the gasification section. Both of these stages operate as a fluidized bed. At the bottom of the gasifier, steam and oxygen are injected and char and ash removed. The steam, oxygen, and char react according to Equations (1-7) to (1-10) to produce a synthesis gas. The gasification stage operates at 1750-1850°F and the hydrogasification stage at 1100-1450°F. The entire gasifier is under 600-1000 psi pressure (US-109). Figure 1-5 schematically shows the Synthane Process.

CO_2 Acceptor Process

The CO_2 Acceptor Process is characterized by three fluidized bed reactors and the use of calcined dolomite as the heat supply for the carbon-steam reaction, Equation (1-9). Lignite or subbituminous coal crushed to 1/8 in. particles is fed with steam, calcined dolomite and synthesis gas to the devolatilizer. The coal undergoes devolatilization and the steam-carbon reaction, Equations (1-7) and (1-9), respectively. Heat for Equation (1-9) is supplied by the reaction of calcined dolomite with carbon dioxide. The lignite char formed also reacts according to Equation (1-8) to form more methane. The synthesis gas exiting the devolatilizer is upgraded downstream into SNG, while the remaining lignite char is sent to the gasifier. Here, more steam and calcined dolomite are added to produce synthesis gas for addition to the devolatilizer. Unreacted char from the gasifier is burned in the regenerator and the heat is used to recalcine the spent dolomite from the gasifier and devolatilizer. The system pressure is 150-300 psi, the gasifier and devolatilizer temperature is 1500°F, and the

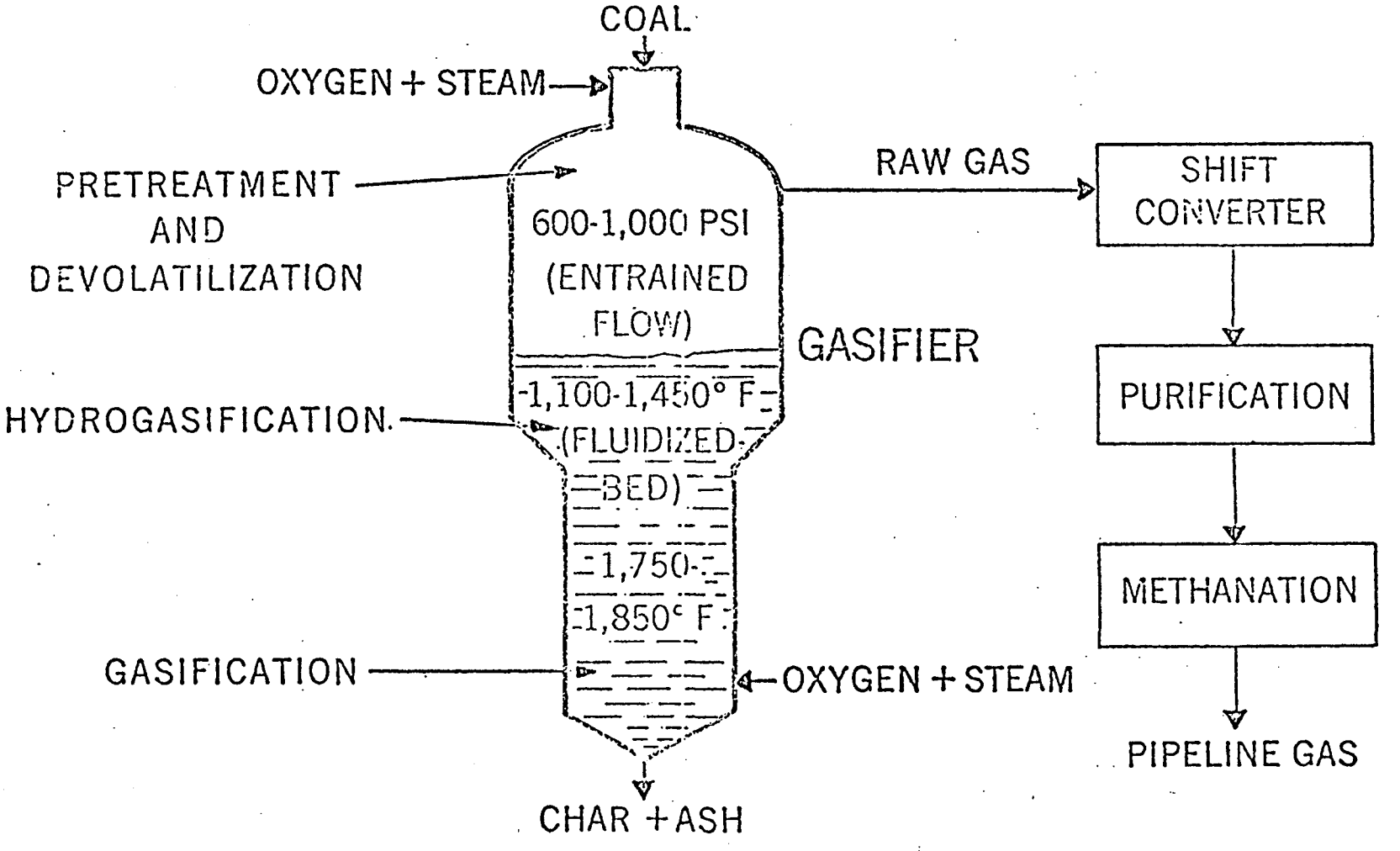

FIGURE 1-5

SCHEMATIC DIAGRAM OF THE SYNTHANE PROCESS

regenerator temperature is 1900°F (FE-068). Figure 1-6 schematically shows the CO_2 Acceptor Process.

1.2 State-of-the-Art

Many of the processing units of an SNG-from-coal plant are new technology and have yet to be industrially proven. The Lurgi process has the only commercially proven gasifier. In addition, the water-gas shift reactor and methanation reactor have not been proven for handling streams with carbon monoxide and hydrogen contents as great as those found in gasification synthesis gases. The following paragraphs briefly describe the state-of-the-art of the most advanced SNG-from-coal processes.

Lurgi Process

The gasifier of the Lurgi process has been commercially used for years to produce a "town gas" or ammonia synthesis feed. However, the methanation reactor has not been proven. Several commercial SNG-from-coal plants which will utilize the Lurgi Process are presently under construction or in the planning stage.

HYGAS Process

The Institute of Gas Technology started work on coal gasification in 1943. From this work evolved the HYGAS Process. A 75 ton/day pilot plant was finished in 1971, which included an electrothermal gasifier (FE-068). A 2 ton/day fluidized bed reactor utilizing steam and oxygen to produce a hydrogen-rich gas has also been constructed. IGT research was originally supported by the American Gas Association (AGA). More recent work has been jointly supported by the AGA and the Office of Coal Research (OCR).

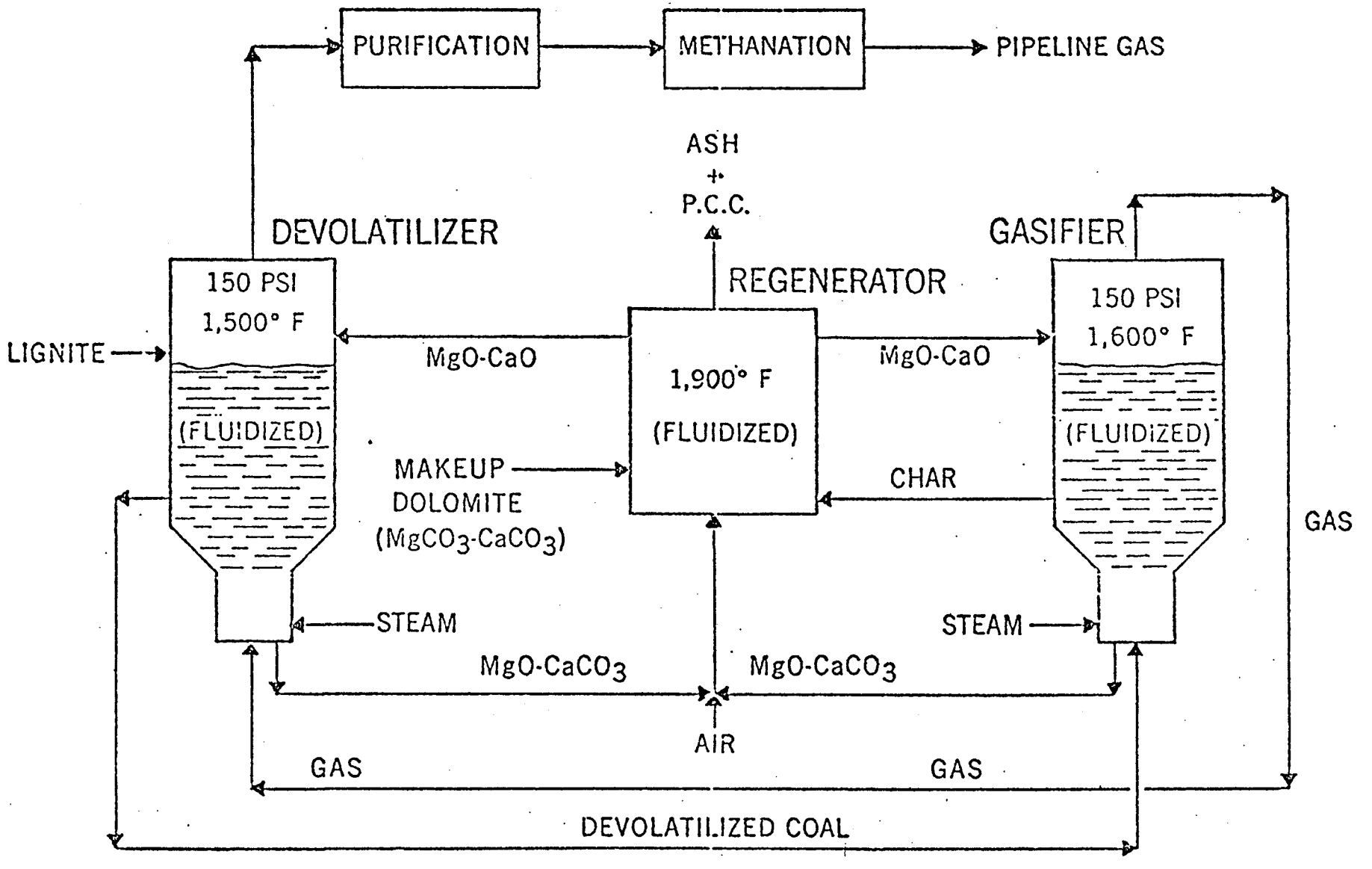

FIGURE 1-6 - SCHEMATIC DIAGRAM OF THE CO_2 ACCEPTOR PROCESS

BI-GAS Process

The BI-GAS Process was developed by Bituminous Coal Research after a literature search which started in 1963. In 1965-1966, laboratory tests were made and then a 5 lb/hr process and equipment development unit was constructed to test the second stage of the gasifier. A 5 ton/hr pilot plant is presently under construction with start-up scheduled in the fall of 1975. Research for the BI-GAS Process was originally funded by the OCR and recently by the AGA and OCR.

Synthane Process

The Synthane Process development work started in 1961. At this time methods of pretreating caking coals in a fluid bed were studied. Construction of a 72 ton/day pilot plant was completed in the fall of 1974. Work was also done on developing a suitable methanation reactor. Two systems were studied: (1) a hot gas recycle process, and (2) a tube wall reactor process. The Synthane Process was developed by the U. S. Bureau of Mines.

CO_2 Acceptor Process

The CO_2 Acceptor Process was developed by Consolidation Coal Company in conjunction with the OCR and the AGA. Bench-scale studies have been completed and a 30 ton/day pilot plant is now in operation. By 1976 the process is expected to be nearing the point of commercial consideration.

2.0 MODULE BASIS

Emissions and environmental impacts are developed for the SNG-from-coal process based on an output of 10^{12} BTU/day of SNG. The data from the Hittman report (HI-083) are expressed on a basis of 10^{12} BTU input to the process. Because of the nature of this study, Radian felt that an output basis would be more appropriate. The Hittman data are easily transformed from an input basis to an output basis by dividing by the process efficiency.

3.0 MODULE DESCRIPTION

When commercialization of SNG-from-coal plants is realized, it is anticipated that many installations will employ a "second generation" process, i.e., the HYGAS, BI-GAS, Synthane CO_2 Acceptor, etc. (the Lurgi process is considered "first generation"), and that moreover, no one process will be predominantly preferred over the others.

The majority of data in the following sections is calculated for the BI-GAS process. When necessary and where applicable, data from any of the other SNG-from-coal processes are used. Radian Corporation, or the Environmental Protection Agency, are not in any way implying or denying approval or advocation of the BI-GAS process; instead, it is felt by Radian Corporation that the BI-GAS process is representative of the new "second generation" process.

The SNG-from-coal module emissions and impacts are developed using one coal feed, an Illinois coal. Section 3 describes the process features while Section 4 gives the module emissions. A general SNG-from-coal module is characterized. Table 3-1 is a summary of the emissions and impacts of an SNG-from-coal plant which utilizes Illinois coal.

3.1 Processing Steps

The processing steps in Radian's SNG-from-coal module include the following:

(1) coal pretreatment and thermal drying

(2) gasification

TABLE 3-1

SUMMARY OF ENVIRONMENTAL IMPACT

SNG-FROM-ILLINOIS COAL

Basis: Production of 10^{12} Btu/day of SNG

Air (lb/hr)	
Particulates	944
SO_2	10,400
NO_x	7,770
CO	414
HC	126
NH_3	54.7
Water (lb/hr)	
Suspended Solids	0
Dissolved Solids	0
Organic Material	0
Thermal (Btu/hr)	0
Solid Wastes (tons/day)	7,930
Land Use (acres)	700
Water Requirements (gal/day)	25×10^6
Occupational Health (per year)	
Deaths	1.8
Injuries	61
Man-Days Lost	16,600
Efficiency (%)	
Primary Product Efficiency	67.9
Total Products Efficiency	67.9
Overall Efficiency	67.9
Ancillary Energy (Btu/day)	0

(3) cooling and solids removal

(4) catalytic shifting

(5) acid gas removal

(6) sulfur recovery

(7) catalytic methanation

(8) ammonia recovery

(9) product drying and compressing

In addition to the above facilities, an auxiliary boiler, a steam superheater, a water treatment unit, oxygen plant and ammonia and sulfur storage facilities are included. While specific processes are assumed for some of these processing units, it is felt that there are other alternatives available which could meet the process requirements. These alternatives should exhibit environmental impacts similar to the processes assumed by Radian however.

3.2 Raw Material Requirements

The SNG-from-coal plant requires coal for four processing units, the gasifier, the coal dryers, the auxiliary boiler and the steam superheater. Table 3-2 gives the proximate and ultimate analyses of the coal used in Radian's study. Table 3-3 shows the breakdown of coal feed rates required by the above units. Methods of calculating coal rates are taken from Hittman's report (HI-083).

TABLE 3-2

ANALYSES OF AN ILLINOIS BITUMINOUS COAL

Proximate Analysis		Ultimate Analysis	
Ash	11	C	61.0
H_2O	11	H_2	5.2
Volatile Matter	36	N_2	1.4
Fixed Carbon	42	O_2	6.8
Sulfur	3.6	S	3.6
Heating Value	11,000	Ash	11.0
		H_2O	11.0
			100.0

Note: All numbers are wt. % except heating value which is Btu/lb coal.

TABLE 3-3

COAL RATES TO VARIOUS UNITS OF AN SNG-FROM-COAL PLANT

Basis: Plant Capacity is 10^{12}Btu/day of SNG

Unit	Illinois Coal Rate
Gasifier	56,400
Coal Dryer	600
Auxiliary Boiler	8,200
Steam Superheater	1,700
Total	66,900

Water requirements are 17,600 gpm or approximately 0.25×10^6 gal/day based on a preliminary design for Wesco's SNG plant utilizing the Lurgi process (US-164). In addition, chemicals for water treatment, acid gas removal, drying, etc., are needed. However, these cannot be quantified at this time. Catalyst replacement is also necessary, but the frequency and quantity depends on the particular catalysts used.

3.3 Ancillary Energy Needs

All ancillary energy needs for the SNG-from-coal plant are supplied internally by burning coal in an auxiliary boiler. Therefore, no ancillary energy needs are considered.

3.4 Products and By-Products

The SNG-from-coal module is based on the production of 10^{12} Btu/day of SNG. The only saleable by-products formed and recovered from the process are ammonia and elemental sulfur. Hydrogen sulfide removed from the synthesis gas is treated in a Claus plant. The Claus tail gas is sent to a Wellman-Lord unit where SO_2 is removed and recycled to the Claus unit. In addition, a Wellman-Lord unit is utilized to treat the flue gas from the auxiliary boiler and steam superheater. The SO_2 removed in these units is also sent to the Claus and Wellman-Lord units, respectively. Total elemental sulfur recovered in the Claus unit amounts to 410 tons per day for a western coal feed and 2,330 tons per day for an Illinois coal feed. Seventy percent of the nitrogen in the coal feed is assumed to form ammonia, which is washed from the synthesis gas and recovered in an ammonia still (HI-083). Total ammonia recovered is 656 tons per day for an Illinois coal feed with 1.37% N_2.

3.5 Efficiency

It is conceivable to define three efficiencies for a process. These are the primary product efficiency, the total product efficiency and the overall efficiency. The primary product efficiency is defined as the energy content of the primary product(s) divided by the energy content of the feed. The total product efficiency is defined as the energy content of all products and by-products divided by the energy content of the feed. The overall efficiency is defined as the energy content of all products and by-products divided by the total energy input to the system, i.e., feed energy content and ancillary energy requirements.

For the SNG-from-coal module there are no ancillary energy requirements (see Section 3.3). The only by-products recovered from the process are ammonia and sulfur. These compounds are not normally considered as fuel or energy sources. Therefore, the by-product energy content is zero. Thus, for the SNG-from-coal module all three efficiency definitions give the same numerical value. For an Illinois coal feed the efficiency is 67.9%.

3.6 Land Usage

Land requirements for an SNG-from-coal plant include areas for processing equipment, coal storage and water treatment facilities. It has been estimated that 165 acres are required for a plant capable of producing 236 x 10^9 Btu/day of SNG (AI-013). Converted to a basis of 10^{12} Btu/day, this gives land requirements as 700 acres.

3.7 Occupational Health

The data on injuries, deaths and man-days lost for the SNG-from-coal module are taken directly from Battelle (BA-230). These numbers are converted from Battelle's basis of production of 10^6 Btu of SNG to Radian's basis of production of 10^{12} Btu/day of SNG.

4.0 MODULE EMISSIONS

4.1 Air Emissions

Air emissions for the SNG-from-coal module arise mainly from the secondary parts of the system. The emissions from the auxiliary boiler, steam superheater, coal dryers and sulfur recovery system account for almost all of the emissions. None of the gasification train units should emit any pollutants directly to the air.

Sulfur emissions from the coal dryers are calculated from coal rates and the coal sulfur content. NO_x and particulate emission from the dryers are calculated using Hittman data (HI-083). The NO_x factor is 0.535 lb of NO_x per 10^6 Btu of coal burned. Particulate emissions are limited to 0.03 grains/DSCF, with 24,000 DSCF required to produce a ton of dry coal.

Emissions from the auxiliary boiler and steam superheater are calculated from coal rates, coal composition and emission factors taken from "Compilation of Air Pollutant Emission Factors" (EN-071). For CO, hydrocarbon and NO_x emissions resulting from firing western subbituminous coal, the coal rate is converted to equivalent tons of 12,000 Btu/lb bituminous coal (HI-083).

In order to evaluate the effect that particulates, SO_2, NO_x, CO and hydrocarbon emissions have on ambient air quality, it is necessary to define certain stack parameters used in calculating ambient air conditions. Mass and volumetric flow rates are calculated from material balances. Stoichiometric combustion is assumed with 25% excess air. Volumetric flow rates are based on exit gas temperatures. Stack heights, gas velocities and exit temperatures are assumed, while stack diameters are calculated from gas velocities and volumetric flow rates.

Table 4-1 lists the air emissions and stack parameters for the individual sources of SNG-from-coal plants. Particulate emission are reduced 99.5% by utilizing electrostatic precipitators and Wellman-Lord scrubbers to treat the flue gas from the auxiliary boiler and steam superheater. In addition, the Wellman-Lord scrubber reduces sulfur emissions by 95%.

Sulfur emissions from the sulfur recovery unit are calculated by performing a sulfur balance around the sulfur recovery unit. H_2S removed from the synthesis gas in the acid gas removal unit is processed by a Claus unit to give elemental sulfur. A Wellman-Lord scrubber treats the Claus tail gas. All SO_2 recovered by the Wellman-Lord unit is recycled to the Claus unit. Storage emissions for NH_3 and hydrocarbons are calculated using storage capacity and EPA emissions factors (EN-071), assuming use of best available control techniques.

The ability of a gasification process to limit its air emissions to those given above will depend to a large extent on the prevention of fugitive emissions from pump seals, joints, flanges, etc. Proper maintenance should allow fugitive wastes to be controlled.

4.2 Water Emissions

Based on data from EL-052, liquid wastes from an SNG-from-coal plant capable of producing 275 x 10^9 Btu/day of SNG are 450,000 lb/hr or 900 gpm. On a 10^{12} Btu/day basis approximately 1,640,000 lb/hr of liquid wastes are produced. These wastes contain high levels of dissolved solids, hazardous organic and trace inorganic compounds, and possibly carcinogenic organic species.

TABLE 4-1

SNG-FROM-COAL MODULE AIR EMISSIONS AND STACK PARAMETERS

Basis: 10^{12} Btu of SNG Output/day

			Emissions lbs/hr						Stack Parameters					
Source	Heat Input MM Btu/Hr	Fuel	Particulates	SO_2	Total Organics	CO	NO_x	NH_3	Mass Flow lbs/hr	ACFM	Velocity FPS	Height Ft.	Temperature °F	Diameter Ft.
A. Coal Drying	595	Illinois Coal	215	3890	-	-	319	-	0.649×10^6	0.190×10^6	60	300	250	8.20
B. Auxiliary Boiler and Steam Superheater	9,110	"	729	2830	126	414	7450	-	10.1×10^6	3.06×10^6	60	500	250	32.9
C. Sulfur Recovery Unit	51,700	"	-	3670	-	-	--	-	4.84×10^6	1.04×10^6	60	300	250	19.2
D. Storage	-			-	-	-	--	54.7				50		
TOTAL			944	10390	126	414	7769	54.7						

Because of the presence of these hazardous compounds in a gasification plant's liquid wastes, these facilities are assumed to operate in a "zero liquid discharge" manner. Therefore, provisions must be made to safely dispose of these wastes or incorporate them in a total water recycle plan. At the present time, the exact composition of these liquid wastes is not known. Thus, possible schemes for treating and recycling wastewater have not been devised.

For plants located in areas where a sufficient amount of solar evaporation occurs, the use of lined evaporation ponds could be the most cost effective means of achieving zero liquid discharge. In areas where evaporation ponds are not feasible, the liquid wastes must be treated and reused. Possible treating methods could include:

1) ionic exchange
2) reverse osmosis
3) chemical treatment
4) biological treatment
5) forced evaporation
6) stripping.

For plants located in the Chicago area, zero liquid discharge is assumed to be achieved by total water recycle although the means of obtaining this goal are not ascertainable at this time. Moreover, the impact of these treatment demands on ancillary energy requirements and/or land use cannot be determined for these plants and hence is not reflected in Table 3-1.

4.3 Solid Wastes

Solid wastes from an SNG-from-coal plant include ash, primary water treatment sludge and wastes from the ammonia recovery unit. Any sludges resulting from biological treatment of liquid streams can probably be used as fuel to fire the auxiliary boiler. The amount of coal ash and slag produced is calculated from coal rates and compositions. The amount of particulates emitted to the air is substracted from the total ash present in the coal feed. Ammonia still wastes are taken as 115 tons/day for a plant capable of producing 250 x 10^9 Btu/day of SNG (HI-083). This is then scaled to an output of 10^{12} Btu/day of SNG. The amount of primary water treatment sludge is calculated from (1) intake water requirements, (2) the assumption that 500 ppm of suspended solids are present in the make-up water, and (3) all suspended solids are removed by treating.

The SNG-from-coal plant is assumed to be a mine mouth operation and hence, all solid wastes are expected to be disposed of as mine fill.

4.4 Thermal Discharges

Thermal discharges to water bodies are eliminated by utilizing wet cooling towers. If an adequate supply of water is not available, air cooled condensors could replace cooling towers.

APPENDIX C

III-E. COAL LIQUEFACTION

1.0 INTRODUCTION

Coal liquefaction is a conversion process that is designed to produce synthetic hydrocarbon liquids from coal. Since the hydrogen to carbon ratio of coal is 0.82 while that of crude oil is 1.77 (SA-109), a liquefaction process must increase the H:C ratio of the coal. The essence of coal liquefaction is, therefore, to crack the coal molecule and either add hydrogen or remove carbon in order to increase the H:C ratio. The bonds of the coal molecule may be attacked either thermally or chemically with the use of hydrogen. Hydrogen serves the twofold purpose of facilitating the breakdown of the coal molecule and, by partial hydrogenation, providing a higher H:C ratio in the product. Due to these advantages, most liquefaction processes employ hydrogen in some fashion. The manner in which, or if, hydrogen is utilized is a distinguishing characteristic of the various liquefaction processes.

1.1 Basic Liquefaction Methods

Liquefaction processes may be separated into two basic groups -- processes that rely solely on heat to crack the coal molecule (carbonization processes) and processes that provide hydrogen in some form to facilitate the dissolution of the coal. The lure of carbonization processes is the apparent simplicity involved with just heating the coal. The advantage of adding hydrogen is that the amount of liquid product which can be generated is not limited by the low hydrogen content of the coal.

Processes which utilize hydrogen can be classified according to how the hydrogen is added. Three types of coal liquefaction processes which utilize hydrogen are the following:

(1) Direct hydrogenation processes route a stream containing molecular hydrogen into the reactor with the coal slurry.

(2) Solvent hydrogenation processes utilize a hydrogen donor solvent to dissolve the coal and subsequently regenerate the solvent for recycle by hydrogenation in a separate vessel.

(3) Gasification - synthesis processes produce liquid fuels by first gasifying the coal and then converting the gas to liquid by a Fischer-Tropsch synthesis. The hydrogen is introduced into the system as steam to the gasifier.

Figure No. 1-1 illustrates this breakdown of liquefaction processes. Not that some overlap can exist between direct hydrogenation and solvent hydrogenation processes since direct hydrogenation processes use a recycle solvent to slurry the coal to the reactor.

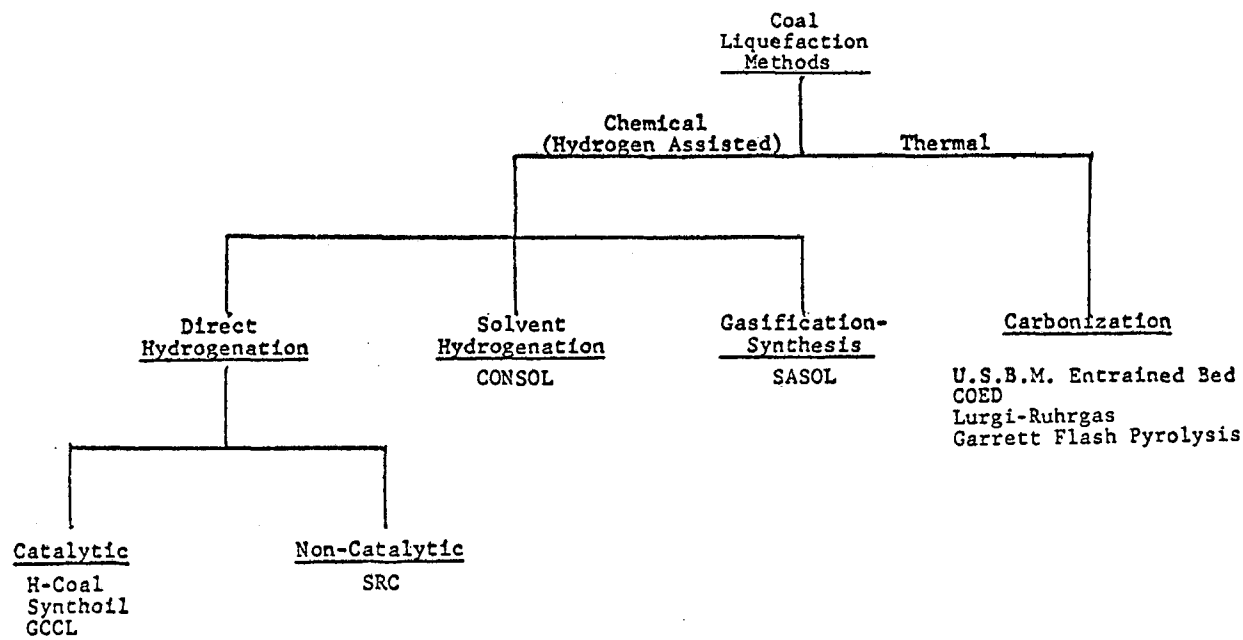

FIGURE 1-1. - CLASSIFICATION OF LIQUEFACTION PROCESSES

1.2 Common Technology

Despite the various approaches to coal liquefaction, much common technology is used in the different liquefaction processes. Most coal liquefaction processes differ in the reaction or dissolution step where the new technology developed for coal liquefaction is involved. Apart from the reaction step, the operations associated with coal liquefaction are accomplished with existing technology. Coal processing prior to the reaction is essentially the grinding and drying procedures used in the coal industry, while the gas/liquid processing after the reactor is accomplished with conventional petroleum refining techniques. The general processing steps involved in coal liquefaction are shown in Figure 1-2. These processing steps are as follows:

- coal preparation
- reaction and solid separation
- fractionation
- gas recovery and treating
- sulfur recovery
- naphtha or light oil hydrotreating
- heavy oil hydrotreating

In addition to these main processing steps, a liquefaction plant will have many auxiliary operations such as power generation, ammonia separation, and water treatment facilities.

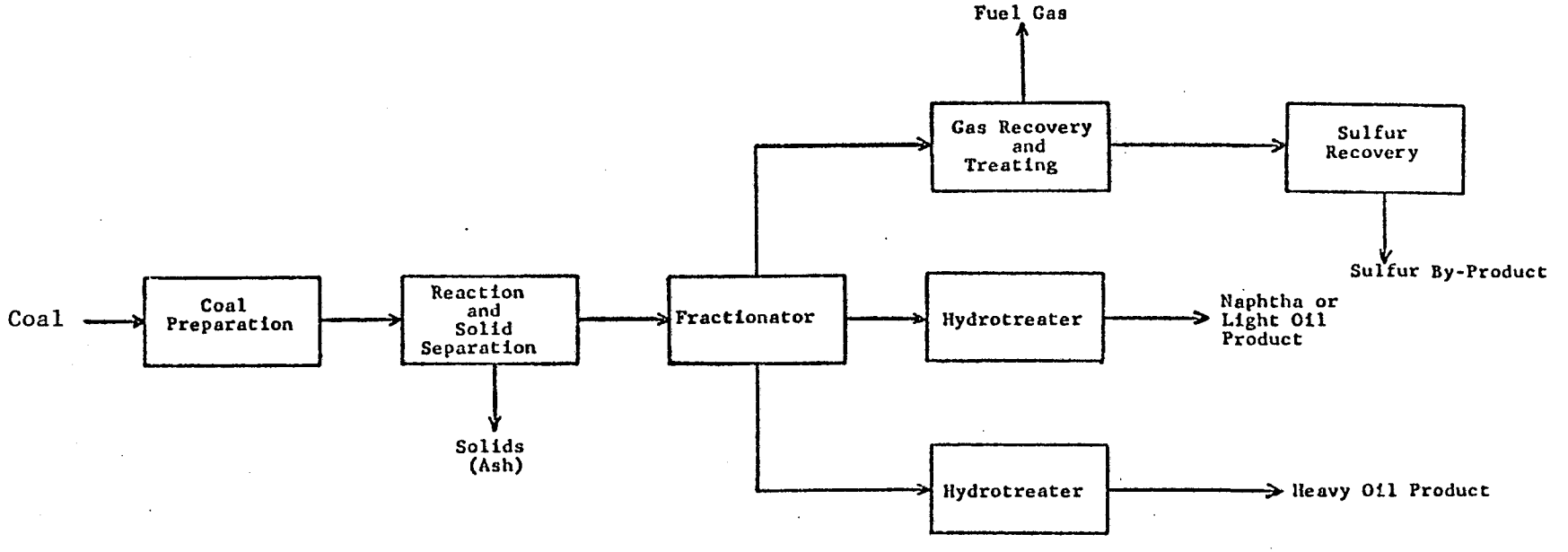

FIGURE 1-2. GENERAL PROCESSING STEPS IN COAL LIQUEFACTION

Steps in coal liquefaction processes where common processing is utilized are as follows:

(1) Coal Preparation - All processes require some degree of coal preparation which normally consists of grinding and drying the coal.

(2) Gas Liquid Separation - Following dissolution, the reactor effluent must be depressurized and the light ends separated (flashed) from the liquid product.

(3) Acid Gas Removal and Sulfur Recovery - Acid gases must be removed from the fuel gas stream and routed to a Claus unit for sulfur recovery. A tail gas treating unit will usually work in conjunction with the Claus unit in order to reduce SO_x emissions.

(4) Liquid Product Separation - Essentially the same basic liquid products can be produced from each process. These liquid products will normally be separated by distillation and may include naphtha, fuel oil, and residual oil.

(5) Product Desulfurization - Liquid product streams will require hydrotreating for desulfurization. Depending upon the quality of oil from the reactor (gravity, viscosity, pour point) and the product

required, the more severe form of hydrocracking may be employed to obtain the desired product.

In addition to these similarities, processes which add molecular hydrogen (direct hydrogenation and solvent hydrogenation) have the same basic steps throughout the dissolution process. Areas of similarity among these processes are as follows:

(1) Coal preparation

(2) Slurrying coal

(3) Preheat and dissolution

(4) Cooling and removal of gases

(5) Pressure let-down and removal of vapors

(6) Separation of solids

(7) Gasification of char

(8) Hydrotreating filtrate

(9) Separation of products and solvent for recycle

An illustration of the flow through these processing steps is shown in Figure 1-3. Note that the main difference in direct hydrogenation and solvent hydrogenation processes is the method of hydrogen addition. The gasifier in these processes serves the two-fold purpose of solids utilization and hydrogen production.

catalyst bed. Hydrogen consumption is approximately 9000 SCF/ton coal. A schematic flow diagram of the Synthoil process is shown in Figure 1-7.

Successful bench-scale tests have been conducted with a 5/16 in. I.D. by 68 ft. reactor. Currently, tests are in progress with a 1.0 in. I.D. reactor. Test results for the Synthoil process are good. Coals containing 1.3 to 4.6% sulfur and 10 to 17% ash have been processed to yield oils containing 0.1 to 0.3% sulfur and 1.0 to 2.0% ash. The liquid yield is approximately 3 bbl oil per ton of coal. The Synthoil process is designed to produce low sulfur fuel oils. The degree of hydrogenation determines the product characteristics and uses.

1.3.1.4 Solvent Refined Coal

Pittsburg and Midway Coal Mining Company's Solvent Refined Coal Process was originally developed to produce a de-ashed and desulfurized solid for power plant fuel. Initial work began in 1962 under contract to the Office of Coal Research. Small batch and continuous flow reactor studies were the forerunner of a 1 TPD pilot plant, with a 50 TPD pilot plant currently being constructed at Tacoma, Washington. Recent work has modified the process to yield liquid products.

In this process coal is pulverized (50-200 mesh) and mixed with a recycle solvent similar to anthracene oil. Slurry mixture is typically 2 to 3 parts solvent with 1 part by weight coal. The slurry is mixed with hydrogen and routed to the reactor. Reactor conditions are approximately 850°F and 1050 PSIG. The SRC process differs from the other direct hydrogenation processes in that no catalyst is employed in the reactor. The reactor consists of four vertical tubes

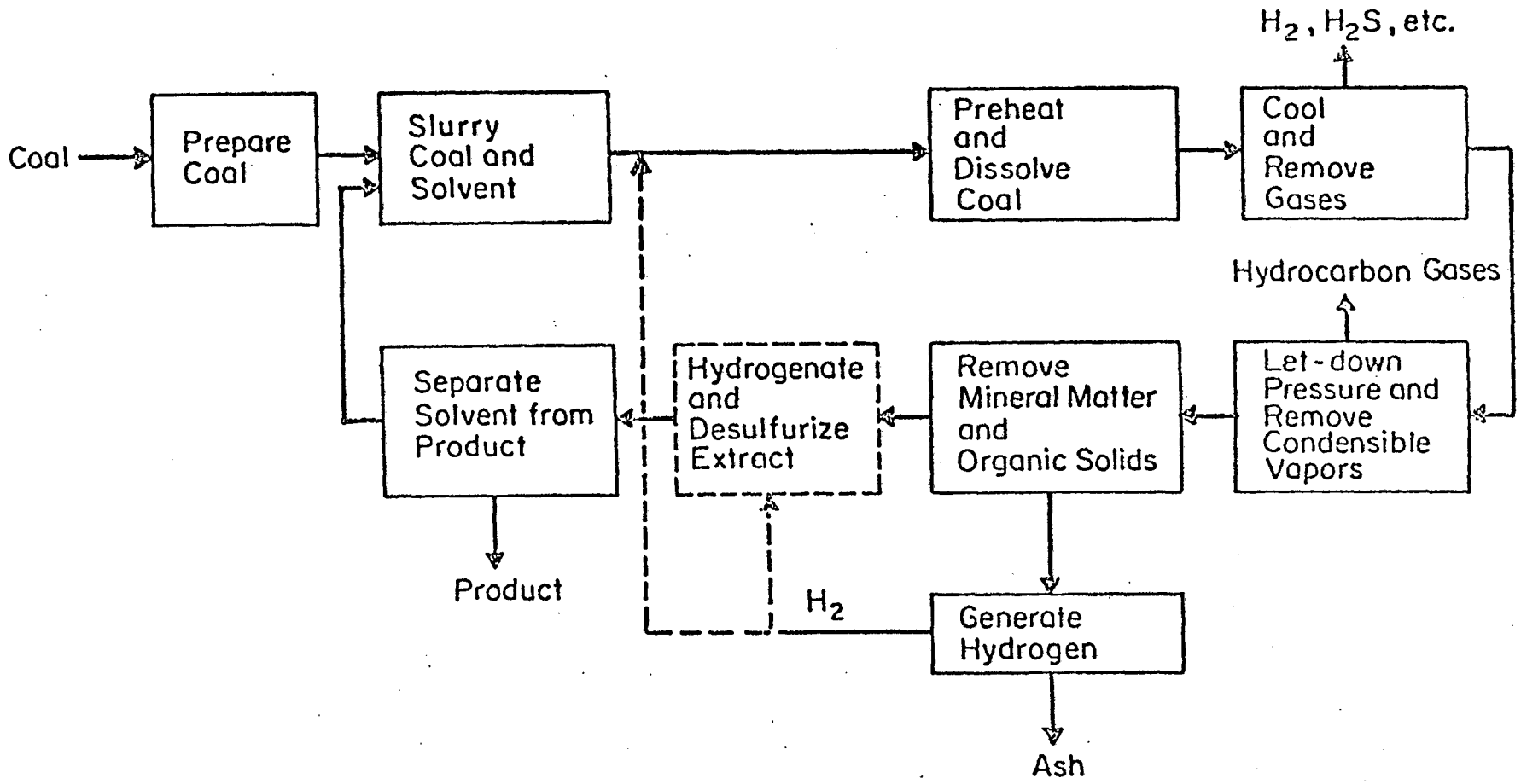

FIGURE 1-3
PROCESSING STEPS IN LIQUEFACTION PROCESSES ADDING MOLECULAR HYDROGEN
(KA-124)

1.3 Liquefaction Processes

The main differences in coal liquefaction processing occur in the dissolution or reaction step. Due to the various conversion processes which may be utilized (direct hydrogenation, solvent hydrogenation, gasification-synthesis, and carbonization), the reactors may differ considerably. Reactors which are employed in liquefaction processes include open vessels, stirred vessels, fixed bed, and fluidized bed. Operating conditions change according to reaction mechanism and reactor types. Solid handling facilities and miscellaneous support facilities also depend upon the reaction procedure employed. Operating conditions and typical products for liquefaction processes utilizing molecular hydrogen are shown in Table 1-1.

1.3.1 Direct Hydrogenation Processes

Much of the work currently being done with coal liquefaction involves processes which route hydrogen into the reactor. Processes of this type include H-Coal by Hydrocarbon Research Incorporated, Gulf Catalytic Coal Liquids by Gulf Research and Development, Synthoil by U.S. Bureau of Mines, and Solvent Refined Coal (modified) by Pittsburg and Midway Coal Mining Company. The first three processes utilize a catalyst in the reactor while the Solvent Refined Coal Process does not require a catalyst.

1.3.1.1 H-Coal Process

The H-Coal Process was jointly developed through the efforts of Hydrocarbon Research, Inc. (HRI) and the Office of Coal Research (OCR). The process is carried out

TABLE 1-1

COAL LIQUEFACTION PROCESS OPERATING CONDITIONS AND TYPICAL PRODUCTS (KA-124)

PROCESS	H-COAL	PARSONS MODIFIED PAMCO	PAMCO (S.SERV.)	BUR. OF MINES	GULF CCL	GULF CCL	CONSOL
Hydrogen used in dissolution?	Yes	Yes	Yes	Yes	Yes	Yes	No
Subsequent Extract Hydrogenation?	No	Yes	No	No	No	No	Yes
Catalytic Dissol.	Yes	No	No	Yes	Yes	Yes	No
Approximate Reactor Temperature.	850°	840°F	850°F	840°F	800°F	800°F	730°F
Reactor Pressure.	3000 psig	1200 psig	1500 psig	4000 psig	3000 psig	3000 psig	400 psig
Coal	Ill. No.6	Ill. No.6	--	Kentucky	Big Horn Subbit.	Pittsburg Seam (Bit.)	Pittsburg Seam Coal
Sulfur, Wt.%	5%	3.38%	5%	4.6%	0.54%	1.49%	3.67%
Solvent to Coal Ratio (to slurry).	1:1(by Wt.)	2.0:1(by Wt.)	2:1(by Wt.)	1.22:1.0(by Wt.)	2.33:1.0(by Wt.)	2.33:1.0(by Wt.)	2:1 (by Wt.)
Percent Coal Dissolved (MAF).	90%+	90%+	90%+	90%+	91%	90%	63%
Hydrogen Consumption Scf/ton Coal (MAF).	15,300	12,600	@2% by Wt. 7600	9000	22,800	17,500	16,300
Solids Separation, Solids Content in Product.	Hydroclones and/or filtration	Filtration	Filtration 0.23 Wt.%	Centrifuge 1.3 Wt.%	Hydroclones & Filt. 0.02 Wt.%	Hydroclones & Filt. 0.03 Wt. %	Hydroclones
Principal Products							
1. Fuel	Fuel Oil	Residual Fuel Oil	Solvent Refined Coal	Fuel Oil	Filtrate Fuel Oil	Filtrate Fuel Oil	Fuel Oil
Yield bbl/ton	1.73 bbl/ton	1.43bbl/ton	1116 lb/ton*	3 bbl/MAF ton*	2.3 bbl/ton	3.6 bbl/ton*	1.52 bbl/ton coal
API gravity	-3.1°API	-9.7°API 60/60		Sp Gr=1.12-1.14	9.0°API	1.2° API	10.3°API
Viscosity				Visc = 75-204 SSF@ 180°F	7.1 CS @100°F	4.3 CS @210°F	
Sulfur, Wt.%	0.5%	<0.5%	<1.2%	0.31%	0.04%	0.11	.128%
Nitrogen, Wt.%				0.9%	0.40%		
2. Fuel	Naphtha	Distillate Fuel Oil			Light Ends	Light Ends	Naphtha
API gravity	38.4°API	13.9°API 60/60			35.3°API	0.45 bbl/ton*	58.0°API
Yield bbl/ton	0.54bbl/ton	0.71 bbl/ton			0.9 bbl/ton*		0.52 bbl/ton
Viscosity					1.2 CS @100°F		
Sulfur, Wt.%	<0.1%	0.2%			0.04%		.056%
Nitrogen, Wt.%					0.19%		

*Exclusive of H_2 Production

in an ebullated bed reactor in the presence of hydrogen and a cobalt molybdate catalyst. The ebullated bed reactor, shown in Figure 1-4, is the heart of the process. The fluidized bed concept allows a catalyst to be used without the plugging problems inherent with a fixed bed reactor.

A flow diagram for the H-Coal process is shown in Figure 1-5. Ground coal (-20 mesh) is slurried with a recycle solvent, mixed with hydrogen, and routed through a preheater to the reactor. Upward passage of the coal and reaction products maintains the catalyst in a fluidized state. The coal is ground finer than the catalyst (1/32-1/16 inch) allowing passage through the catalyst. Unreacted solids are removed at the top of the reactor along with the liquid product, while the coarser catalyst is retained in the reactor. Catalyst can be added and withdrawn continuously in order to maintain catalyst activity. Internal turbulence is insured by an internal slurry recycle. The reactor operates at 800-900°F and 1500-3000 PSIG. Products typically would be a naphtha (38.4^{o} API) and a fuel oil (-3.1^{o} API). The estimated overall thermal efficiency is 69.6% (KA-124).

Solids separation is accomplished by hydroclones followed by a rotary drum filter. H-Coal yields for bituminous and subbituminous coals are shown in Table 1-2 (HE-055). Conversion for the bituminous coal is given as 89.3 wt% with conversion for the subbituminous coal as 81.4 wt%.

The H-Coal process was piloted in a 3 ton/day pilot plant. Conversion of approximately 88% was obtained, corresponding to a liquid yield of approximately 4.3 bbl per ton of moisture and ash-free coal. The process has demonstrated good desulfurization characteristics producing oils containing less than 0.5% sulfur from 3.4% sulfur coal.

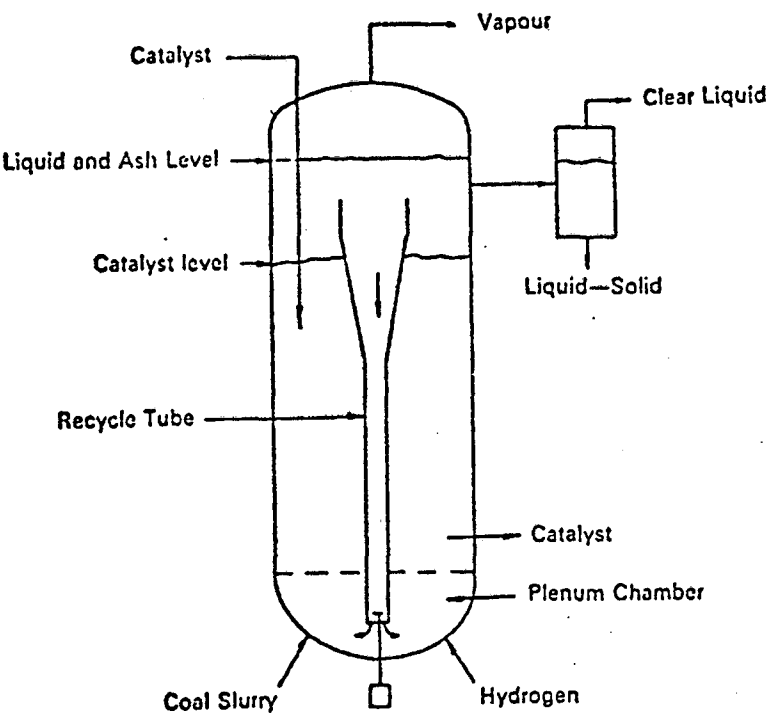

FIGURE 1-4

H-COAL EBULLATED BED REACTOR

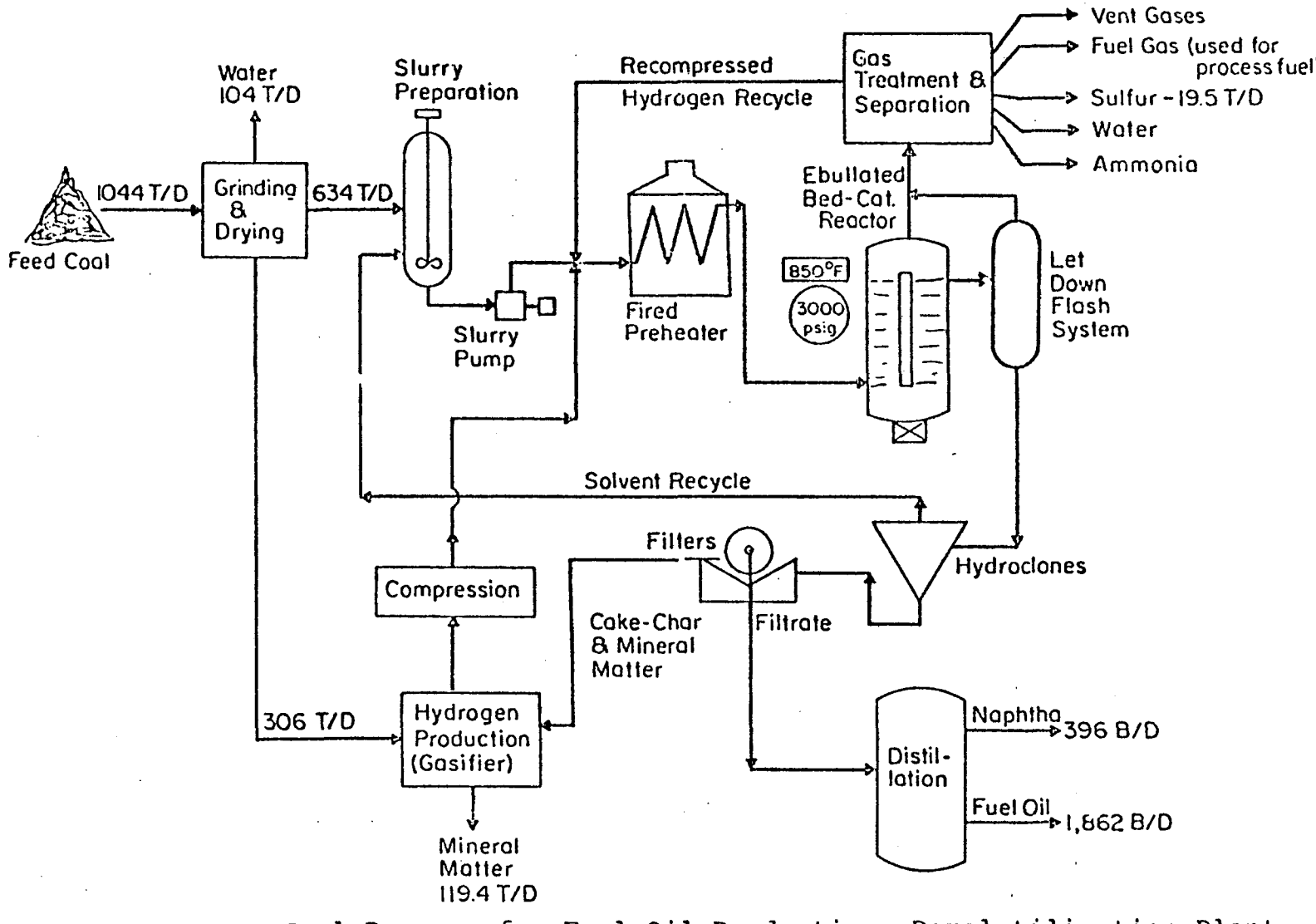

H-Coal Process for Fuel Oil Production--Devolatilization Plant (KA-124)

FIGURE 1-5

TABLE 1-2

YIELDS BASED ON MOISTURE AND ASH-FREE COAL (HE-055)

Illinois No. 6 bituminous coal

	Yields, % by weight
Light gas, C_1-C_3	10.2
Liquid product	71.0
Unconverted char	10.7
Hydrogen sulfide, water, ammonia	14.0

$$\text{Conversion} = \frac{\text{maf coal-char}}{\text{maf coal}} (100) = 89.3\ \%\ \text{by weight}$$

Liquid product inspections

ASTM cut points	% by volume	Degrees, API	Liquid yield % by weight of moisture and ash free coal	Liquid yield barrels per ton of moisture and ash free coal	Nitrogen, p.p.m.	Sulfur, p.p.m.
C_4 to 400°F.	31.6	49.2	18.5	1.35	1,000	990
400° to 680°F.	39.7	21.1	27.5	1.70	1,700	1,600
680° to 975°F.	15.8	0.3	12.7	0.67	4,100	1,000
975°F.+	12.9	−20	12.3	0.55		
Total	100.0		71.0	4.27		

Wyoming subbituminous coal

	Yields, % by weight
Light gas, C_1-C_3	10.8
Liquid product	56.1
Unconverted char	18.6
Hydrogen sulfide, water, ammonia	12.9
Carbon monoxide and carbon dioxide	6.6

Conversion = 81.4 % by weight

Liquid product inspections

ASTM cut points	%, by volume	Degrees, API	Liquid yield % by weight of moisture and ash free coal	Liquid yield barrels per ton of moisture and ash free coal	Nitrogen, p.p.m.	Sulfur, p.p.m.
C_4 to 400°F.	39.4	50	18.5	1.35	2,000	<700
400° to 650°F.	27.6	21	15.5	0.95	3,000	<700
650° to 975°F.	18.0	4	11.1	0.62	6,000	<700
975°F.+	15.0	−16	11.0	0.52		
Total	100.0		56.1	3.44		

1.3.1.2 Gulf Catalyst Coal Liquids

Another direct hydrogenation process is the Gulf Catalytic Coal Liquids process developed by Gulf R&D. Work to date has been limited to bench-scale activity, although a 1 TPD pilot plant is under construction. This process utilizes a fixed bed reactor. Processing steps are similar to those used in the H-coal process in that ground coal is slurried with a recycle solvent, mixed with hydrogen, and routed through a preheater to the reactor. Reactor operating conditions are 800-900°F and 3000 PSIG. Approximately 91% of the coal (MAF)* is dissolved. Solid separation is achieved by hydroclones followed by rotary drum filters.

Product yield is three barrels per ton of coal charged. Approximately 72% of the product is a heavy (9° API) fuel oil with the remaining 28% being equilavent to a distillate fuel cut. A flow diagram of the Gulf process is shown in Figure 1-6. This process routes the filter cake to a coker unit rather than a gasifier. Hydrogen production is accomplished with a steam-hydrocarbon reformer.

1.3.1.3 Synthoil

The Synthoil process pilot plant operated by the U.S. Bureau of Mines is another example of a direct hydrogenation process. In this process a slurry of coal and recycle solvent is mixed with hydrogen, preheated, and routed into the reactor. The reactor is a 68-foot-long tube packed with 1/8 inch pellets of a cobalt molybdate catalyst. The reactor is normally operated at 840°F and 2000-4000 PSIG. Over 90% of the coal (MAF) is dissolved. The turbulent flow of hydrogen and short residence time prevents the coal from plugging the

---

* Moisture and ash-free.

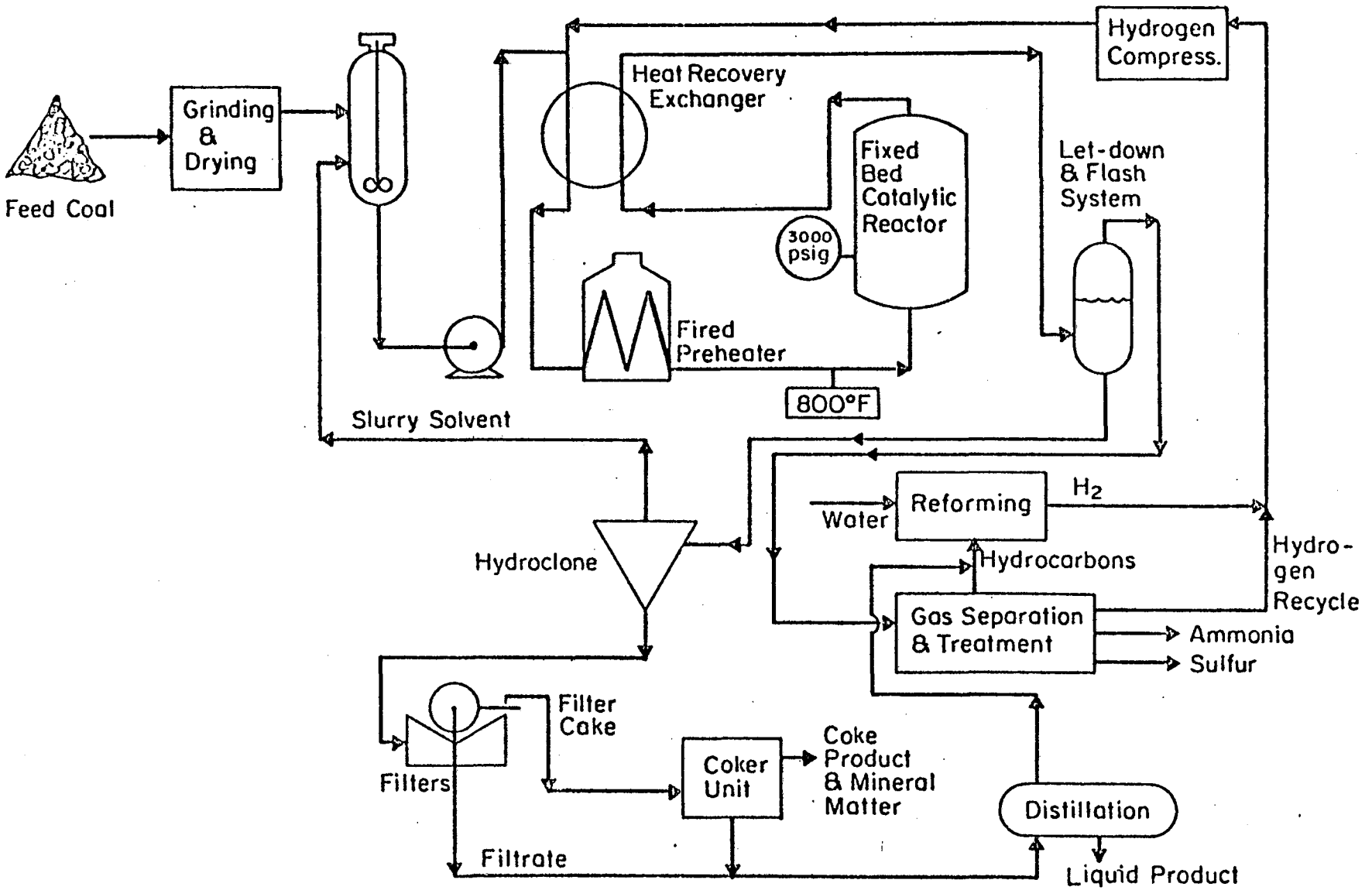

FIGURE 1-6 - GULF R&D CATALYTIC COAL LIQUIDS PROCESS
(KA-124)

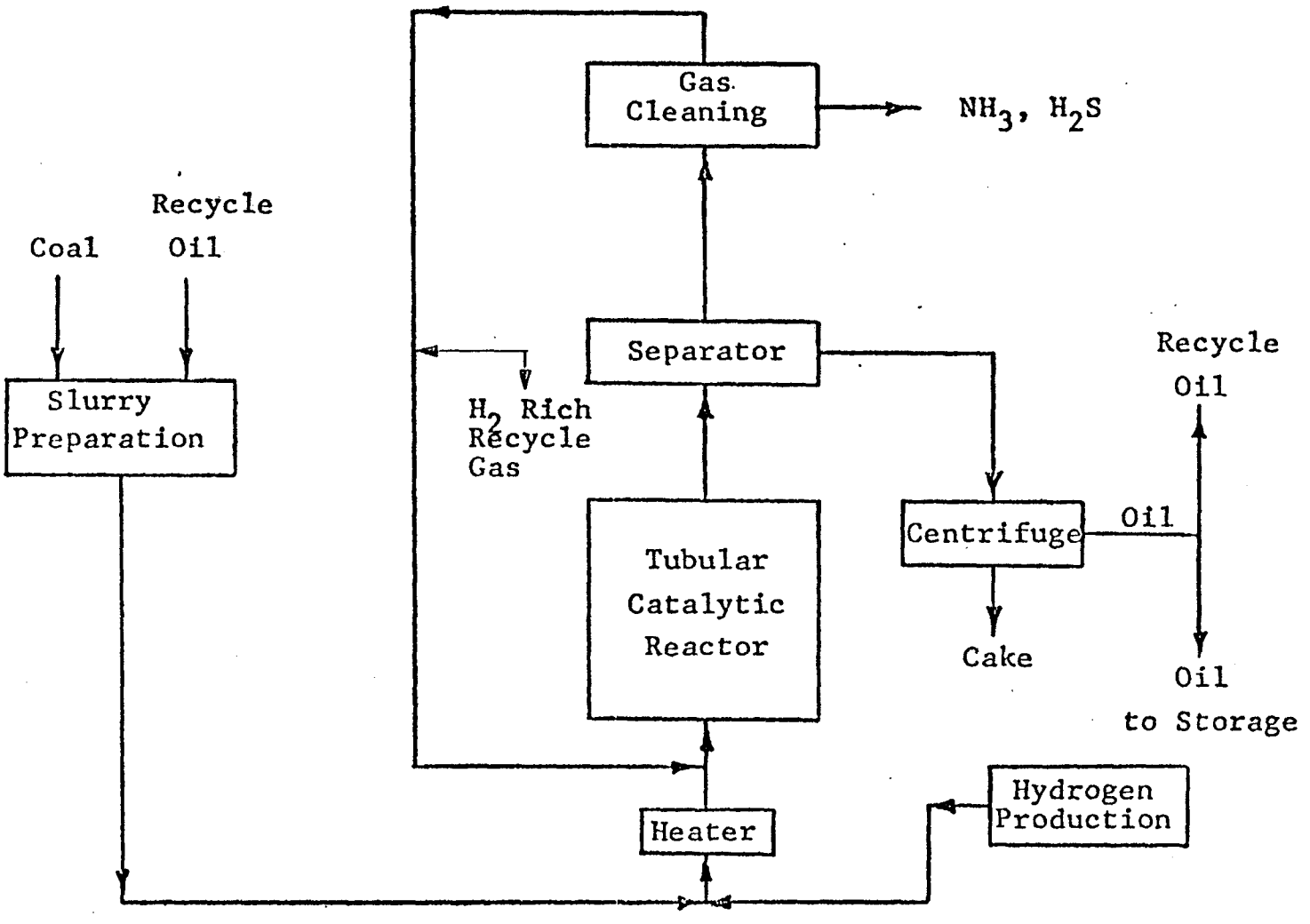

FIGURE 1-7 - SCHEMATIC FLOW DIAGRAM - SYNTHOIL PROCESS

in series with upflow of both liquid and gas. Initially, the solvent is absorbed by the coal resulting in a significant increase in slurry viscosity. As the residence time of the coal increases, dissolution begins to occur. Over 90% of the coal (MAF) is dissolved. Hydrogen consumption is approximately 12,600 SCF/ton coal. Solid separation is accomplished by rotary drum filters. Operating conditions at the filter are 600°F and 150 PSIG. These conditions represent a compromise between ease of operation and reliability of equipment.

A flow diagram of the SRC process is shown in Figure 1-8. Liquid products consist of a naphtha, fuel oil (13.9° API) and a residual oil (-9.7° API). Thermal efficiency is approximately 62.5%. Products from a Ralph M. Parsons Company design of a 10,000 TPD demonstration plant charging Illinois No. 6 seam coal, heating value approximately 12,800 Btu/lb, are as follows:

(1) <u>Two primary boiler fuels</u>:

(a) Four billion Btu/hr (minimum) of a -9.7° API liquid having a maximum sulfur content of 0.5%, a flash point of 150°F and a higher heating value of 16,600 Btu/lb.

(b) Two billion Btu/hr (minimum) of a 13.9° API, 400-870°F boiling range hydrogenated liquid having a naximum sulfur content of 0.2%, a flash point of 150°F and a higher heating value of 18,330 Btu/lb.

(2) A 52° API hydrogenated, C_4-400°F boiling range light oil containing 5 ppm nitrogen and 1 ppm sulfur.

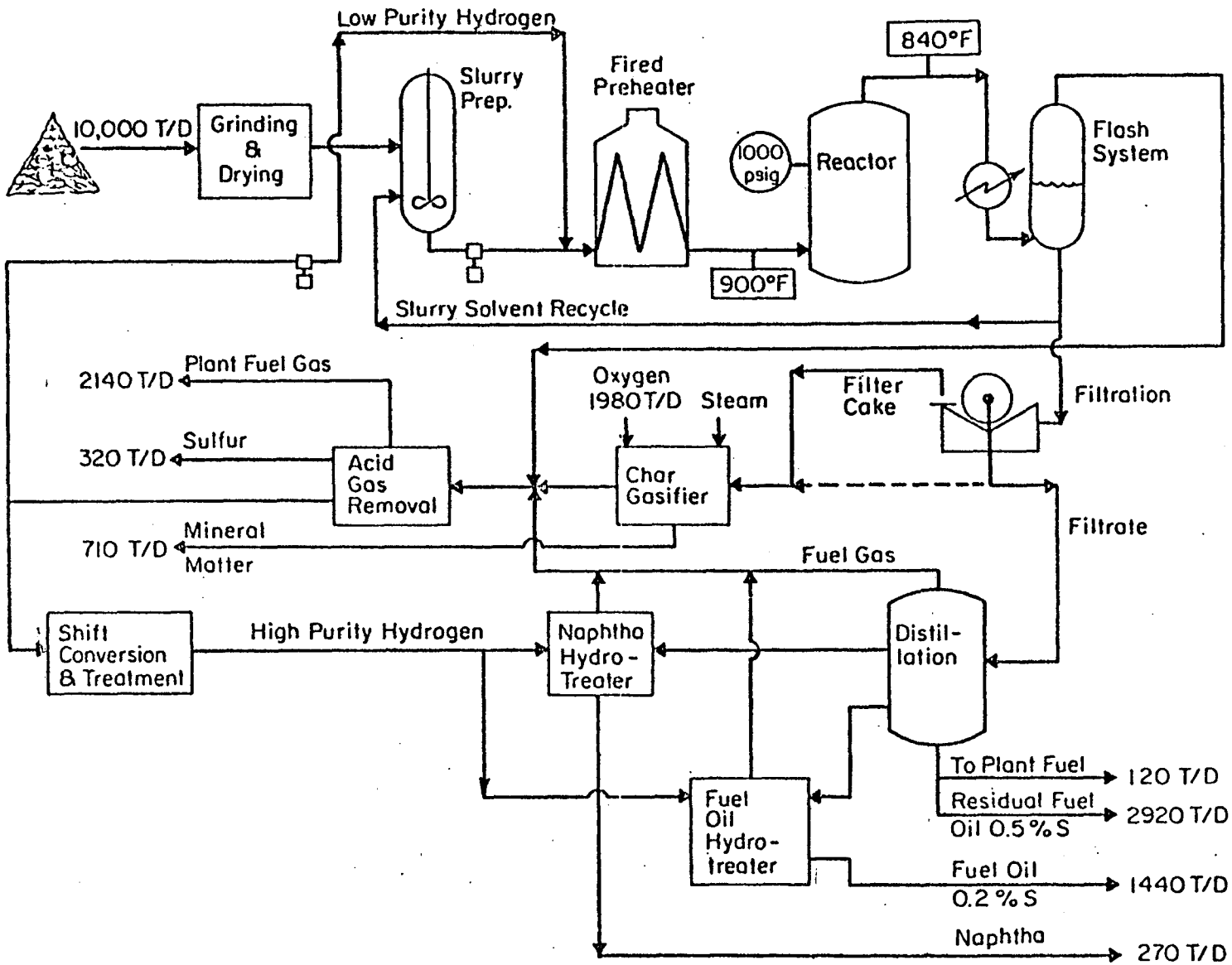

FIGURE 1-8 - PARSONS--PAMCO HYBRID DEMONSTRATION PLANT SCHEMATIC FL[redacted]SHE[redacted](KA[redacted]4)

1.3.2 Solvent Hydrogenation

Solvent hydrogenation is another category of coal liquefaction processes. These processes physically dissolve coal in a recycle hydrocarbon solvent. Coal dissolution allows removal of insoluble ash and insoluble sulfur from the extract. Any hydrogenation that occurs during extraction also converts soluble organic sulfur to a removable form. The coal extract is processed to remove ash, sulfur, and other impurities; to recover solvent; and possibly to further hydrogenate and purify the liquid product. Extract hydrogenation technology was pioneered in Germany; however, it did not enjoy any particular success since this technology was not developed beyond the pilot scale. OCR renewed development activity of extract hydrogenation in the 1960's. An outgrowth of these activities is the Consol Synthetic Fuels process.

1.3.2.1 Consol Synthetic Fuels Process

The Consol Synthetic Fuels process has undergone development that has included the operation of a 20 ton/day pilot plant at Cresap, West Virginia. This development project (known as Project Gasoline) utilized a coal liquefaction flow scheme that was designed by the Consolidation Coal Company. Figure 1-9 presents a block diagram of the flow scheme that was employed.

The Consol process developed by Consolidation Coal Company employs a hydrogen donor solvent to dissolve the coal. Feed coal is dried and ground in a coal preparation step, slurried with the recycle solvent, and routed through the preheater to the reactor. Only solvents capable of transferring hydrogen are effective for dissolution of the coal. Coal derived solvents such as Tetralin appear to offer the best hydrogen transfer capabilities.

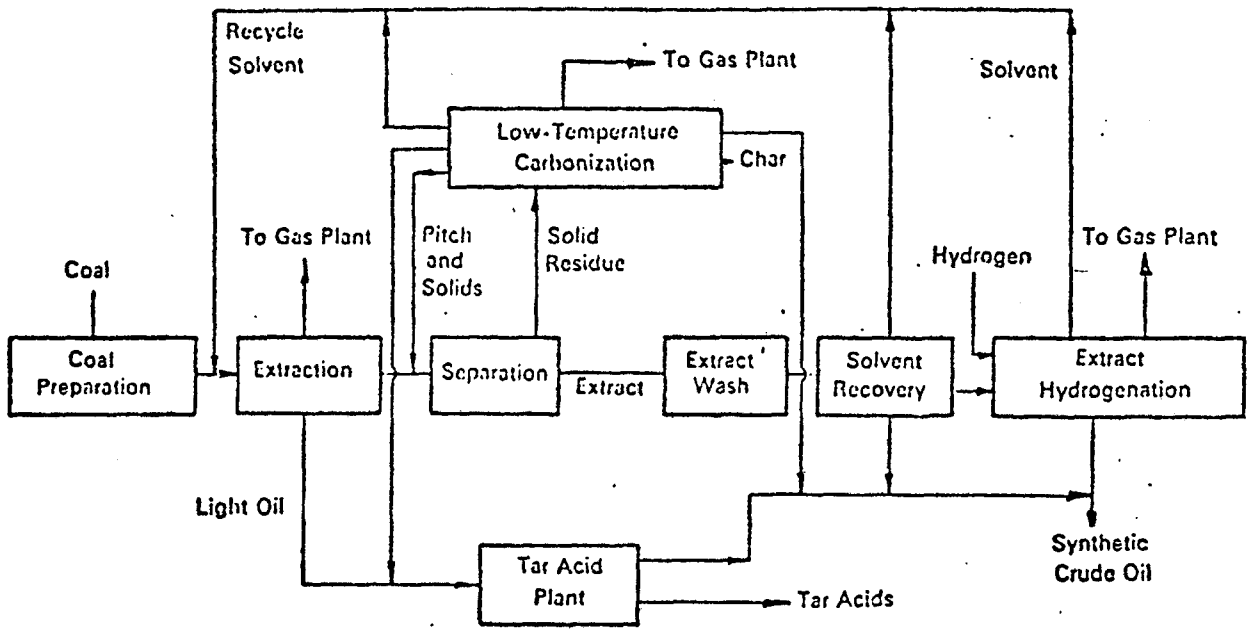

FIGURE 1-9 - BLOCK DIAGRAM OF THE CONSOL SYNTHETIC FUELS PROCESS (SA-109)

The reaction takes place in a stirred vessel. Since turbulence cannot be provided by the H_2 gas stream as in the previous processes, the agitation is needed to insure the presence of the hydrogen donor solvent whenever a coal molecule is cracked. The reactor operating conditions are 700-750°F and 400 PSIG. Approximately 80% of the coal (MAF) is dissolved.

After removal of light ends and solids from the reactor effluent the liquid stream must be hydrotreated. The hydrotreating step not only desulfurizes what will be the product streams but, by partial hydrogenation, regenerates the recycle solvent. Hydrogenation is achieved in a fixed bed reactor containing cobalt molybdate catalyst, operating at 775-850°F and 3000-4200 PSIG. The hydrotreater effluent is separated by distillation into recycle solvent and the product streams of gas, naphtha, and fuel oil. Overall thermal efficiency is approximately 69.2%.

Product yield and characteristics are presented in Table 1-3.

1.3.3 Gasification-Synthesis (SASOL)

The gasification-synthesis system is the only procedure currently being used to produce liquid fuels from coal on a commercial scale. The 10,000 TPD commercial plant was built by the South African Coal, Oil and Gas Corporation (SASOL) in the Republic of South Africa and was financed through the Industrial Development Corporation of South Africa, a government-supported agency.

The SASOL process is an indirect route to the production of liquid fuels from coal. The gasification-synthesis process consists of two main steps.

TABLE 1-3 - CONSOL PRODUCTS

Typical products. Pittsburgh seam coal (Irealand mined) yields:

Product	Product/ton of raw coal	Characteristics
Gas	3.424 Mscf	HHV 933 BTU/scf
Naphtha	0.52 bbl	58° API, 5.2 million BTU/bbl, 0.056 wt % S
Fuel Oil	1.52 bbl	10.3° API, 6.3 million BTU/bbl, 0.128 wt % S
Ammonia	11.00 lb	
Sulfur	71.00 lb	
Ash	213.60 lb	

The coal is first gasified to produce a synthesis gas containing hydrogen, carbon monoxide, and other constituents. After purification the H_2 and CO undergo a Fischer-Tropsch synthesis to produce a desulfurized, deashed liquid product.

A block flow diagram of the SASOL process is shown in Figure 1-10. The coal is gasified in a Lurgi reactor with steam and oxygen at a temperature of approximately 1500°F and a pressure of 380 PSI. A gas consisting primarily of hydrogen, carbon monoxide, carbon dioxide and methane is produced. The basic reactions are as follows:

$$C + H_2O \rightarrow CO + H_2 \qquad (1\text{-}1)$$

$$C + O_2 \rightarrow CO_2 \qquad (1\text{-}2)$$

$$C + 2H_2 \rightarrow CH_4 \qquad (1\text{-}3)$$

The gas is purified by a methanol wash for removal of sulfur compounds and carbon dioxide. The purified gas is then reformed with high purity oxygen and steam over a nickel catalyst to reduce the methane content. The reforming reactions are

$$CH_4 + H_2O \rightarrow CO + 3H_2 \qquad (1\text{-}4)$$

$$CH_4 + 1/2O_2 \rightarrow CO + 2H_2 \qquad (1\text{-}5)$$

The carbon monoxide and the hydrogen from the reformer are then converted to liquid products by means of a Fischer-Tropsch synthesis. A simplified expression for the overall reaction is:

$$8CO + 17\ H_2 \rightarrow C_8H_{18} + 8\ H_2O \qquad (1\text{-}6)$$

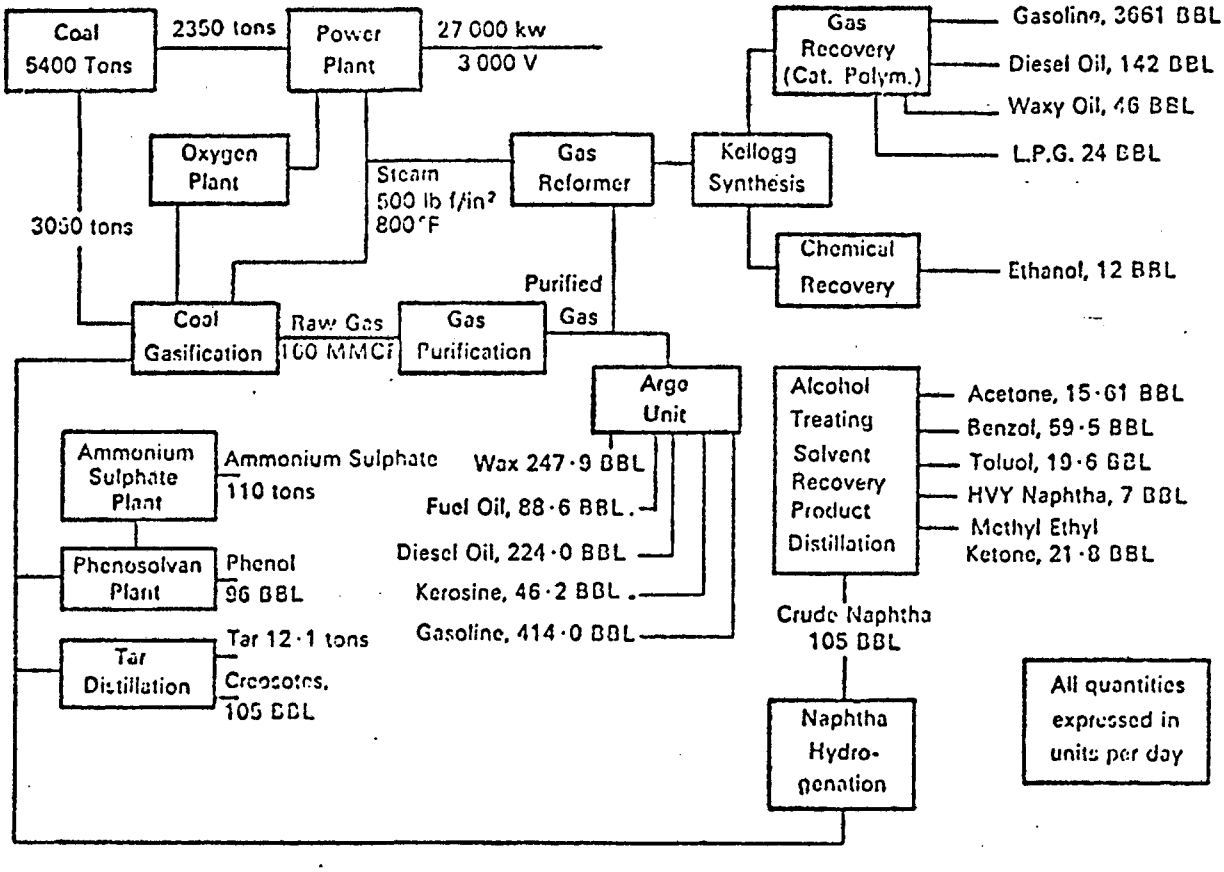

FIGURE 1-10 - BLOCK DIAGRAM OF THE SASOL PROCESS (SA-109)

Two types of reactors are used in the SASOL plant, a German "ARGE" unit and the American Kellogg process. The arge process is a fixed bed process which primarily yields heavy fuel oils and diesel oils. The Kellogg process is a fluidized bed process which produces lower boiling materials such as LPG, gasoline and furnace oils. The Fisher-Tropsch synthesis takes place at 600°F and 350 PSI over an iron catalyst. Gas velocity is 4-7 FPS. The reformer effluent gas is split and routed through both Fischer-Tropsch processes to produce a full range of liquid products.

Although there has been intense interest in the SASOL process, this plant was built and operates under conditions that are different than those under which this country is striving to liquefy coal. These differences are as follows:

(1) South Africa has no oil but does have a large supply of coal.

(2) South African coal costs less than half what it does almost anywhere else in the world. In October 1973, the average pit-head cost of South African coal was about $2.50 per ton as compared to more than $6.00 per ton in the United States (BR-137). The SASOL plant consumes 10,000 tons of coal per day; however, only 5,000 tons are routed to the gasifier, while half of the coal is used for steam generation.

(3) This plant was built piece by piece over the last fifteen years with government support, thus defraying the tremendous capital investment.

(4) Also, the SASOL plant is devoted to producing a wide range of chemical products rather than optimizing the output of liquid fuels. The efficiency of the plant is such that 70% of the heat in the feed coal can be converted into gaseous fuel. However, if the production of gasoline is maximized only 40-45% of the input heat is recovered in the product.

1.3.4 Carbonization

Carbonization refers to liquefaction of coal by thermal pyrolysis. Coal is simply heated in reactors to produce volatile hydrocarbons and a carbon or char residue. The hydrocarbons are recovered as a process gas and liquid oils while char remains a by-product of the process. Liquid yields from various carbonization processes are shown in Table 1-4.

TABLE 1-4

LIQUID YIELDS FROM VARIOUS COAL CARBONIZATION PROCESSES

Process	*Yield, lb/ton of coal*
U.S. Bureau of Mines	250—400
F.M.C. Corporation	370—470
Lurgi-Ruhrgas	450—570
Garrett Process	—700

(SA-109)

The apparent simplicity of carbonization has always intrigued process developers and many efforts have been made to come up with an economically attractive process. Unfortunately several problems exist which prevent carbonization from being a matter of simply heating the coal.

These problem areas are as follows:

(1) Residence Time: Much of the carbonization technology evolved from the methods of coke production. These procedures involved batch-type operations over long periods of time. An economic process for coal liquefaction requires a significantly shorter residence time and continuous operation. Also, it has been discovered that the shorter the residence time, the less severe the cracking, and the greater the liquid yield. Therefore, a good carbonization process must be fast enough to be practical on a large-scale and achieve enough cracking to produce liquid products without converting a substantial amount into gas.

(2) Coking Coals: Another problem involved with carbonization is that the coals which more readily yield liquid products are coking coals. These coals become plastic when heated to decomposition temperature and adhere to the reactor walls, rapidly fouling the process. In order to keep the process in line their fouling must be minimized.

(3) Heat Requirement: The carbonization process is highly endothermic since it involves the thermal decomposition of the coal molecule. Approximately 500 Btu of heat per pound of coal processed must be supplied. Although some of the coal in the reactor may be burned to supply the heat, this approach would greatly decrease the liquid yield.

1.3.4.1 U.S.B.M. Entrained Bed Process

The United States Bureau of Mines Entrained Bed Process avoids many of the problems associated with carbonization processes by pneumatically injecting coal into a reactor with air. An illustration of this process is shown in Figure 1-11. The gas velocity is sufficiently high so that the coal moves up the reactor in plug flow. Short residence time provides high liquid yields. Agglomeration is avoided by contacting the coal with air during the carbonization step, partially oxidizing the surface of the coal particles. Unfortunately the off gases from this process are so diluted with nitrogen that they cannot be used for pipeline gas.

FIGURE 1-11

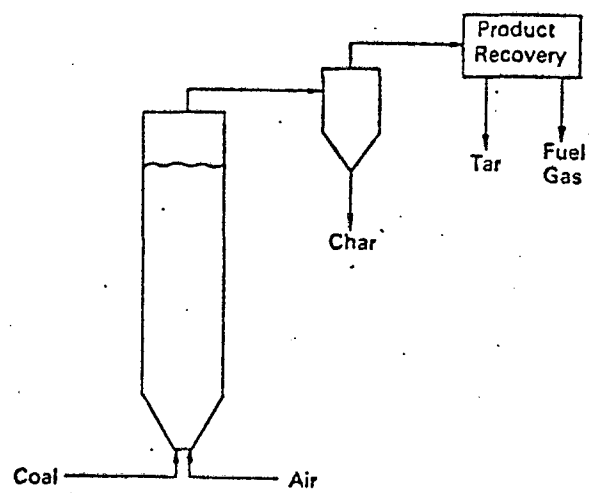

U.S.B.M. entrained bed carbonization

1.3.4.2 COED

The COED process developed by FMC Corporation minimizes agglomeration by heating the coal in stages. The process consists of four reactors or heating stages. A flow diagram of the COED process is shown in Figure 1-12. Each reactor is a fluidized bed. In the first stage the coal is dried and heated to approximately 600°F with steam and combustion gases. This stage heating allows the softening point of the coal to be increased. The coal is subsequently routed to the second reactor where it is heated to about 850°F by recycle char and gas from the third stage. The overhead gases from the second stage contain the product gases and liquids. This overhead is scrubbed and routed to distillation for product recovery. Meanwhile, the char from the second stage is routed to the third reactor. The char is heated to approximately 1000°F by a combination of oxygen and hot gases from stage four. The char from stage three is routed to the fourth and final stage where it is heated to 1600°F with oxygen. The last stage produces hydrogen which is needed for hydrotreating the product tar. Synthesis crude oil produced from the COED process has a very high viscosity and must be hydrotreated rather severely to allow the oil to be pumped. Approximate yields for the process are 55 wt % char, 19% oil, and 17% gas.

The FMC Corporation has developed the COED process with financial support from OCR. A 36 ton coal/day pilot plant is presently testing the process at Princeton, New Jersey. Plans to pilot a gasifier which will utilize the char by-product of the COED process have been initiated.

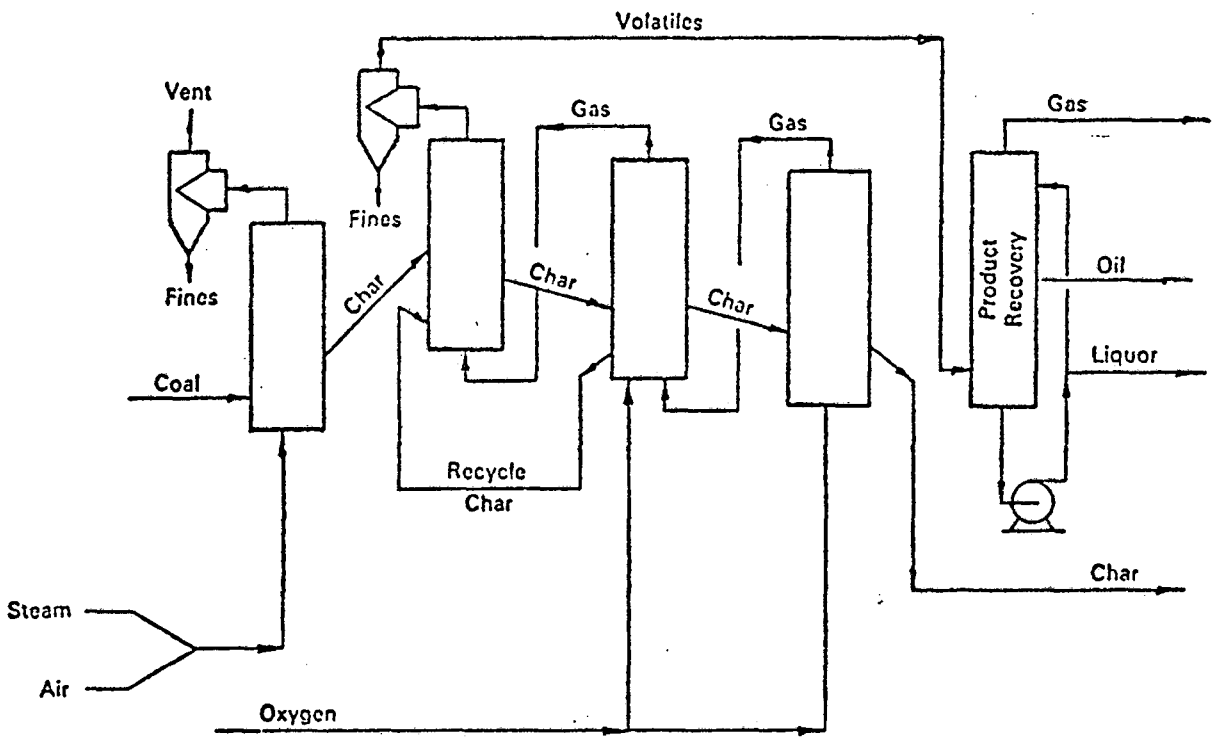

FIGURE 1-12 - CHAR OIL ENERGY DEVELOPMENT PROCESS FLOW DIAGRAM (SA-109)

1.3.4.3 Lurgi-Ruhrgas

The Lurgi-Ruhrgas process uses a mechanical mixer to intimately contact coal and recycled hot char. A flow diagram of the Lurgi-Ruhrgas process is shown in Figure 1-13. The hot char supplies the heat for reaction. Agglomeration is no longer a problem since not only does the char act as a diluent but the mixer helps break up large particles. The liquid yield is fairly high since the residence time in the mixer is only a few seconds. Product vapors leave overhead. Char from the mixer is superheated for recycle by reacting it with air in a transport reactor. Capital investment for this process appears to be significantly higher than those of competitors.

FIGURE 1-13

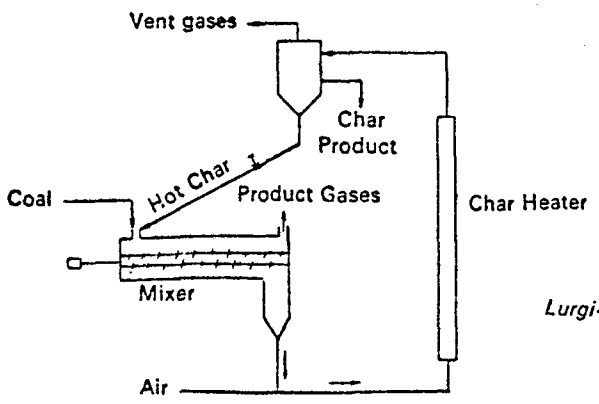

Lurgi-Ruhrgas carbonization process

(SA-109)

1.3.4.4 Garrett Carbonization Process

Garrett Research and Development is developing a flash pyrolysis coal liquefaction process. It is estimated that the process can produce as much as 2 bbl oil per ton coal. This compares to 1.5 bbl oil per ton coal processed for the COED process. Economics for Garrett's carbonization process are also reported to be favorable.

The Garrett Flash Pyrolysis process utilizes an entrained bed reactor. A block flow diagram is shown in Figure 1-14. Crushed, dried coal is conveyed by recycle gas to the entrained bed reactor. The reactor is heated by recycle char from the char heater and maintained at 1100°F. Reactor effluent passes through cyclones to separate the char from the gas. Some of the char is cooled as product. The remaining char goes to a char heater where some is burned to reheat the char to approximately 1400°F for recycle to the reactor. The gas stream is cooled and the tar (liquids) separated. The gas is separated into three streams. One stream is used to entrain the coal fed to the reactor. Another stream is routed to product after acid gas is removed. The remaining gas is used in the production of hydrogen for hydrotreating the process tar. At the hydrotreater the tar is upgraded to obtain a synthetic crude oil. Product yields are shown in Table 1-5.

FIGURE 1-14

Garrett's coal pyrolysis process

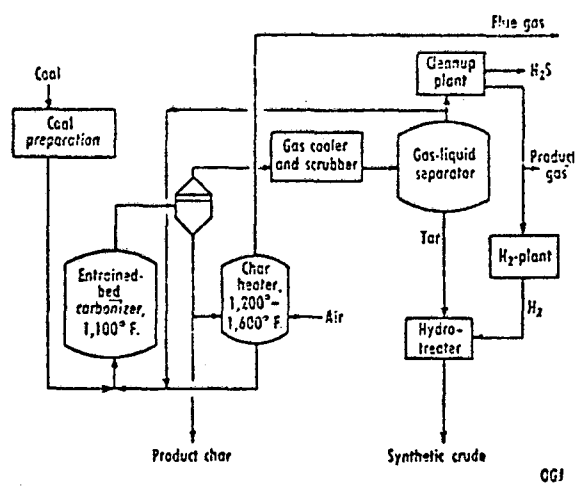

TABLE 1-5

PRODUCTS FROM GARRETT FLASH PYROLYSIS

(BO-117)

Typical products. Pryolysis of a West Kentucky coal produces:

Products	Wt %	Characteristics
Char	56.7	12,100 BTU/lb
Tar	35.0	About 80% C, 7% H_2, 1.5% N_2, 10% O_2, 1.5% S
Gas	6.6	700 BTU/scf
Water	1.7	
Total	100.0	

1.4 STATE-OF-THE-ART

As previously stated, only one commercial coal liquefaction plant, SASOL, is currently in operation. However, this particular plant operates under unique social, political, and economic conditions which are not duplicated in the United States. At present the other three procedures (direct hydrogenation, solvent hydrogenation, and carbonization) appear to be more likely candidates for use in this country.

1.4.1 Stage of Development

The most attractive processes in these categories are all in the pilot plant or bench-scale stage. The present development stages of these processes are as follows:

(1) CONSOL - 20 TPD pilot plant

(2) SRC (modified) - 50 TPD unit under construction - 75 lb/day bench-scale and 1TPD pilot plant

(3) H-Coal - 3 TPD pilot plant - 600 TPD unit in planning

(4) Synthoil - 0.5 TPD pilot plant - 8 TPD unit next stage

(5) COED - 36 TPD pilot plant

Conceptual commercial size plants have been designed for several processes. These processes are listed in Table 1-6.

TABLE 1-6

CONCEPTUAL COMMERCIAL SIZE COAL LIQUEFACTION PLANTS (KA-124)

Process	Engineering Design	Plant Size tons coal/day	Coals	Main Fuel Oil Products		Plant Capital Cost* Million $	Date of Study	MW Potential at 35% Efficiency	Cost $/KW
Modified SCR	Ralph M. Parsons (17)	10,000	Illinois No. 6, 3.4%S	0.2%S 0.5%S	13.9°API -9.7°API	270	1973	620	435
Consol CSF	Foster-Wheeler (18)	20,000(MF)	Pittsburg Seam 4.2%S	0.056%S 0.128%S	58°API 10.3°API	230	1972	1530	150
H-Coal	Hydrocarbon Research, Inc. (10)	25,000(MF)	Illinois No. 6, 5%S	0.1%S 0.5%S	27°API -3.1°API	299	1973	1800	166.
		35,211	Wyodak 0.7%	<0.2%	39.3°API	445	1973	2000	222.
Gulf CCL	Gulf R&D(8)	33,000	Big Horn 0.54%	<0.04%S 0.04%S	35.3°SPI 9°API	423	1973	2300**	184.***

* Does not include interest during construction
** Not given
*** Estimated
(MF) Moisture Free

In addition to these processes, several research projects on liquefaction are currently underway. These projects include the following:

(1) "Removal of Sulfur from Coal by Treatment with Hydrogen" - Colorado School of Mines

(2) "Intermediate Coal Hydrogenation Processes" - University of Utah

(3) "Premium Fuels from Northern Great Plains Lignite-Project Lignite" - University of North Dakota

(5) Various projects on solvent refining of coal - University of Kentucky, University of Michigan, and University of Auburn.

1.4.2 Problem Areas

Areas in which problems exist for coal liquefaction processes are as follows:

(1) Thermal Efficiency: The low thermal efficiency of liquefaction processes dictates an intensive effort to recover energy. Most liquefaction processes claim an efficiency between 60 and 70%. Much heat is required to crack the coal bonds which cannot be recovered as liquid fuel. Any processing

techniques that will increase the efficiency should boost the potential of coal liquefaction as a viable alternative for the production of liquid fuels. Since these efficiency values were determined from pilot plant runs employing direct heat, some improvement may be obtained on a commercial scale where heat exchange can be utilized to greater extent.

(2) Water Management: Large amounts of make-up water are required in coal liquefaction processes for use in the gasifier, process water, and for cooling. A design for a SRC demonstration plant requires 522 gal/ton coal (PA-139) while a CONSOL plant design requires 259 gal/ton (HI-083). Due to the trace elements and other pollutants in coal, the low supply of water at many potential plant sites, and the increasingly stringent clean water legislation, liquefaction plants must achieve a status of zero water discharge with maximum water reuse. In order to obtain this goal a comprehensive water management program coupled with extensive water treating facilities must be utilized. Such facilities include fan air coolers, mechanical draft cooling towers, strippers to remove NH_3 and H_2S, API

separators, biological treating facilities, and containment/evaporation ponds. It should be noted that much work is still required in this area and that much is still unknown about the ability to clean up coal liquefaction water. For instance, high concentration of certain trace elements or trace organics may have an adverse effect on the bacteria used in biological treating facilities. New technical developments may have to occur before a zero water discharge can really be achieved.

(3) Solids Separation: One of the critical problem areas involves solid separation from the reactor effluent. Separation methods include filtration, hydroclones, centrifuges, evaporation-distillation, carbonization, and solvent washing. Most processes propose to use hydroclones followed by rotary drum vacuum filters. Experience with hydroclones at the Cresap pilot plant was poor. Typical solids in the overflow was 12% (7% mineral residue) while the underflow contained approximately 17% of the feed liquid. When the Cresap pilot plant was shut down solids separation was still an unresolved problem. Likewise rotary drum vacuum filters offer problems. Filtration efficiency increases with slurry temperature but mechanical reliability decreases. Under the best conditions many

mechanical problems can be expected from rotary drum filters.

(4) Solvent-to-Coal Ratio: The solvent-to-coal ratio may be dictated by many conditions such as pressure drop, coking in preheaters, or filtration rates. If no restrictions exist a compromise between slurry viscosity and pumping capabilities should be made. Most processes operate at a solvent-to-coal ratio between 1.5:1 to 2.5:1.

(5) Solvent Generation: Solvent generation and control is potentially another problem. Most liquefaction processes requiring a solvent plan to start up using a petroleum fraction and generate the anthracene solvent.

(6) Preheat: Enough preheat must be applied to reach reaction temperature; however, the slurry should not be preheated to the extent that appreciable reaction takes place in the preheater. When dissolution occurs the slurry should be in the reactor under the most favorable mass transfer conditions for hydrogenation.

(7) Pressure Let-Down: Malfunctioning of the pressure let-down systems has occurred in pilot plant operations. Types of pressure let-down systems that can be used are expansion through a control orifice, controlled volume let-down and turbine or piston expansion.

(8) Hydrogen Production: Hydrogen production is one of the major expense items involved with coal liquefaction. Many liquefaction processes operate in conjunction with gasifiers which maximize carbon utilization as well as producing hydrogen for the liquefaction process.

2.0 MODULE BASIS

The module calculations discussed here are based on a coal liquefaction plant producing 10^{12} Btu/day* of primary liquid fuels. For a coal liquefaction plant these primary fuels include naphtha, fuel oil, and residual oil. The thermal efficiency** selected for this module is 62.5% (PA-139). This value is the efficiency given for the modified Solvent Refined Coal process by Pittsburgh and Midway Mining Company. The efficiency is chosen since the SRC process appears to be under serious consideration for commercial operation, with a 50 TPD pilot plant under construction and the design of a 10,000 TPD demonstration plant completed. In addition, the demonstration plant design by Ralph M. Parsons Co. (PA-139) provides a good source for checking the heat and mass flows associated with a liquefaction process. Using a thermal efficiency of 62.5% the required coal feed is determined. A liquefaction module is analyzed for an Illinois coal with a heating value of 10,820 Btu/lb. Table 2-1 summarizes the emissions from the liquefaction module.

---

* All flow rates are based on calendar days.

** $\frac{\text{Heating Value of Primary Fuels}}{\text{Heating Value of Coal Feed}} \times 100$

TABLE 2-1
SUMMARY OF ENVIRONMENTAL IMPACTS
COAL LIQUEFACTION MODULE
FEED: ILLINOIS COAL (10,820 BTU/LB)
BASIS: 10^{12} BTU/DAY OUTPUT LIQUID FUEL

Air (lb/hr)	
Particulates	612
SO_2	1957.7
NO_x	8507.5
CO	340
HC	2607.6
Water (lb/hr)	
Suspended Solids	0
Dissolved Solids	0
Organic Material	0
Thermal (Btu/hr)	0
Solid Wastes (tons/day)	8423
Land Use (acres)	3254
Water Requirements	33.3×10^6
Occupational Health (per year)	
Deaths	0.511
Injuries	9.9
Man-Days Lost	2372
Efficiency (%)	
Primary Fuels Efficiency	62.5
Total Products Efficiency	62.5
Overall Efficiency	62.5
Ancillary Energy (Btu/day)	0

3.0 MODULE DESCRIPTION

The coal liquefaction module which is described here is assumed to utilize an Illinois coal with a heating value of 10,820 Btu/lb. An analysis of this coal is shown in Table 3-1. For a 10^{12} Btu/day output with a 62.5% primary efficiency, approximately 73,900 TPD of Illinois coal is required. From Table 1-6 the average commercial size plant will charge approximately 25,000 TPD coal.

3.1 Processing Steps

The processing facilities considered to be part of the liquefaction module are as follows:

Coal stockpiling facilities
Coal preparation facilities
Coal slurry tank
Coal preheater and reactor
Flash System
Filtration System
Fractionation
Naphtha hydrotreater
Fuel oil hydrotreater
Char gasifier
Acid gas removal unit
Shift conversion unit
Methanation unit
Oxygen plant
Claus plant
Tail gas treating unit
Ammonia separation facilities
Power generation unit
Steam generation boiler
Water treating facilities
Product tankage.

TABLE 3-1

TYPICAL ILLINOIS COAL ANALYSIS

Heating Value Btu/lb	10,820
Sulfur Wt %	3.7
Ash Wt %	11.3
Water Wt %	14.4
Volatile Matter Wt %	33.4
Fixed Carbon Wt %	40.9

The major processing steps are coal dissolution, product fractionation, naphtha hydrotreating, fuel oil hydrotreating, char gasification, acid gas removal, shift conversion, methanation, oxygen plant, and sulfur recovery.

3.2 Flow Rates

Module flow rates are shown in Figure 3-1. Using the SRC product distribution, the product yields are determined as 12,830 BPD distillate fuel and 89,920 BPD heavy oil. For a 10^{12} Btu/day output with a 62.5% primary efficiency, the coal requirement is 73,900 TPD Illinois coal.

3.3 Heat Requirement

Typical liquefaction process heat demands are obtained from the Parson SRC design (PA-139). The fuel gas heat requirements for the 10,000 TPD SRC plant are shown in Table 3.2. The total heat requirement for this plant is given as 76.3 x 10^9 Btu/day or 3179 x 10^6 Btu/hr. Fuel gas is to supply 70.0 x 10^9 Btu/day with the difference being made up with residual fuel oil. In order to determine emissions at specific sources fuel oil is considered used as the product fractionation, fuel oil HDS, naphtha HDS, and shift converter. These units are selected to reflect the appropriate percentage of fuel oil being burned for process heat.

For the Radian module, the difference in unit heat requirements as shown in Table 3-2 (69.6 x 10^9 Btu/day) and the total SRC heat requirement of 76.3 x 10^9 Btu/hr is used for power generation and steam generation. Therefore, the heating requirements for these two demands are altered to show 1051.9 x 10^6 Btu/hr for power generation and 683.9 x 10^6 Btu/hr for steam generation. Extrapolating to a 10^{12} Btu/day product basis the total module heat requirement is determined to be 4.87 x 10^{11} Btu/day. Process unit heat requirements are shown in Table 3-3.

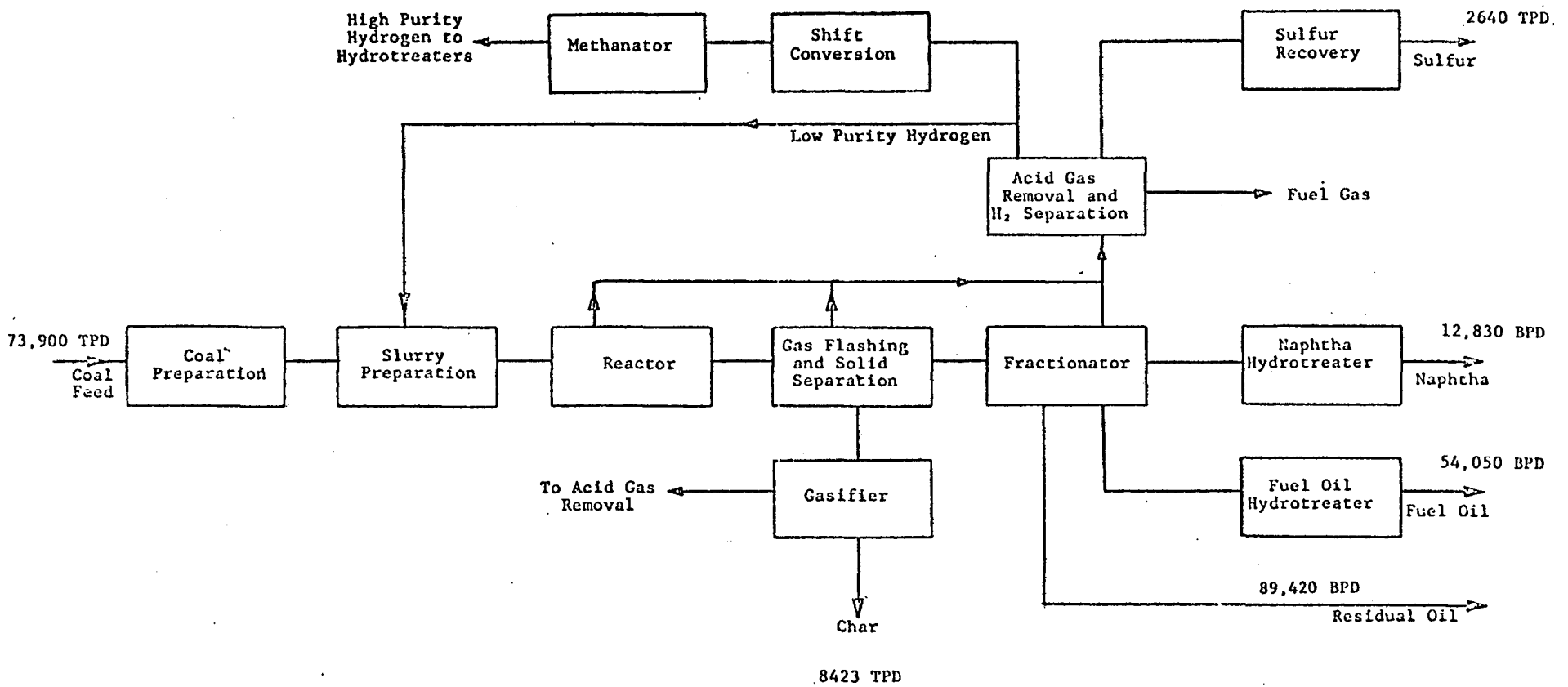

FIGURE 3-1 - LIQUEFACTION MODULE

TABLE 3-2

Unit	Description	Fuel (10^6 Btu/hr)
10	Coal Preparation	--
11	Coal Slurrying and Pumping	--
12	Coal Liquefaction and Filtration	1039.5
13	Dissolver Acid Gas Removal	--
14	Coal Liquefaction Product Distillation	92.3
15	Fuel Oil Hydrogenation	57.0
16	Naphtha Hydrogenation	11.6
17	Fuel Gas Sulfur Removal	--
18	Gasification	41.1
19	Acid Gas Removal	--
20	Shift Conversion	96.3
21	CO_2 Removal	--
22	Methanation	--
23	Sulfur Plant	78.3
24	Oxygen Plant	--
30	Instrument and Plant Air	--
31	Raw Water Treatment	--
32	Process Waste Water Treatment	--
33	Power Generation	926.0
35	Product Storage	--
36	Slag Removal System	--
37	Steam Generation	558.0
	Total Fuel Gas Consumption	2900.1

TABLE 3-3

MODULE HEAT REQUIREMENT

BASIS: 10^{12} BTU/Day Product

UNIT	HEAT REQUIREMENT (10^9 BTU/Day)
Coal Dissolution/Reaction	159.2
Distillation	14.2
Fuel Oil Hydrotreater	8.7
Naphtha Hydrotreater	1.8
Gasifier	10.5
Shift Conversion	14.7
Sulfur Recovery	12.0
Power Generation	161.1
Steam Generation	104.7
	486.9

3.4 Module Efficiency

Three different efficiency terms are defined for each of the modules considered in this study. These three efficiencies are defined as follows:

(1) Primary fuels efficiency:

Primary liquid fuels from the liquefaction module are naphtha, distillate oil, and residual oil. The primary fuels efficiency is the heating value of these three products divided by the heating value of the coal feed. This value is 62.5% for this module (HI-083).

(2) Total products efficiency:

This efficiency credits any other hydrocarbon products made. Sulfur and ammonia are not included. Total products efficiency is the heating value of all hydrocarbon products divided by the heating value of the coal feed. Since all the fuel gas produced by the module is consumed and no other hydrocarbon by-products are made, the total products efficiency is equivalent to the primary fuels efficiency.

(3) Overall Efficiency:

This efficiency takes into account any ancillary energy such as electricity that may be supplied to a module. This efficiency

is equal to the heating value of all hydrocarbon products divided by the heating value of the coal feed plus any ancillary energy input to the module. Since the coal liquefaction module generates its own power, this efficiency is also equal to the primary fuels efficiency.

The determination of the primary fuel efficiency for the Illinois coal liquefaction module is shown in Table 3-4.

3.5 Water Requirements

The make-up water requirement for this module is 33.3×10^6 gal/day. This rate is determined from the SRC design requirement of 5.2×10^6 gal/day (3626 gpm) for a 10,000 TPD plant producing 1.57×10^{11} Btu/day.

3.6 Land Use

Based on a land requirement of 510 acres for a plant producing 1.57×10^{11} Btu/day (HI-083), a land use figure of 3254 acres for a 10^{12} Btu/day module is determined.

3.7 Occupational Health

Occupational health data for this module is obtained from the Battelle study (BA-230). This information, based on 10^6 Btu output, is as follows:

deaths:	1.4×10^{-9}
total injuries:	2.7×10^{-8}
man-days lost:	6.5×10^{-6}

Data for injuries and man-days lost due to injuries are from the chemical industry. Assumptions which are made include a death rate equivalent to 5% of total injuries and 6,000 man-days lost/death. The values as presented in the Battelle report are adjusted to a 10^{12} Btu output basis for this module.

TABLE 3-4

PRIMARY FUELS EFFICIENCY

Stream	Rate	Heating Value	Total Heating Value
Coal	90,800 TPD	8806 Btu/lb	1600×10^9 Btu/day
Naphtha	12,830 BPD	5.37×10^9 Btu/BBL	68.9×10^9 Btu/day
Fuel Oil	54,050 BPD	6.10×10^9 Btu/BBL	330.5×10^9 Btu/day
Residual Oil	89,420 BPD	6.72×10^9 Btu/BBL	600.9×10^9 Btu/day
			10^{12} Btu/day

PRIMARY FUELS EFFICIENCY = $10^{12}/1.6 \times 10^{12} = 0.625$

4.0 MODULE EMISSIONS

Environmental effects resulting from air emissions, water effluents, and solid wastes are discussed in separate subsections below.

4.1 Air Emissions

Air emissions from the module result from fuels combustion, coal preparation, sulfur recovery, ammonia storage, petroleum storage and miscellaneous hydrocarbon losses. Air emissions and stack parameters for the module are shown in Table 4-1.

4.1.1 Fuels Combustion

Fuel combustion emissions sources are determined to be the following:

liquefaction reactor preheater
product fractionator
fuel oil hydrotreater
naphtha hydrotreater
char gasifier
shift converter
power generation
steam generation

From information in the Parsons SRC design (PA-139) emission sources at a particular unit are specified if more than one potential source exists (naphtha HDS: reactor heater and reboiler heater). Emissions from these sources are calculated by use of the EPA fuel combustion factors for fuel gas and residual fuel oil. These factors are shown in Table 4-2. Power

TABLE 4-1

AIR EMISSIONS AND STACK PARAMETERS

LIQUEFACTION MODULE - ILLINOIS COAL

BASIS: 10^{12} BTU OUTPUT/DAY

Source	Heat Input mm Btu/Hr	Fuel	Emissions lbs/Hr					Stack Parameters					
			Particulates	SO_2	Total Organics	CO	NO_x	Mass Flow lbs/Hr	ACFM	Velocity FPS	Height Ft.	Temperature °F	Diameter Ft.
1. Coal preparation			92.4										
2. Liquefaction Reactors (6 preheaters)	1105	1.07×10^6 SCFH	19.3	28.8	3.22	18.2	257.5	975×10^3	388×10^3	60	200	450	11.72
TOTAL	6633	6.44×10^6 SCFH	115.8	173.2	19.3	109.2	1545	5.85×10^6					
3. Distillation (2 stacks)	295	1.835×10^3 gal/Hr	42.1	106.6	7.34	7.34	73.4	254.7×10^3	97.5×10^3	60	200	450	5.87
TOTAL	590	3.67×10^3 gal/Hr	84.2	213.1	14.7	14.7	146.8	509.3×10^3					
4. Fuel Oil HDS													
A. Reactor Heater	209	1.30×10^3 gal/Hr	29.9	75.2	5.2	5.2	52.0	180.4×10^3	69.0×10^3	60	200	450	4.94
B. Reboiler Heater	155	963 gal/Hr	22.2	56.1	3.85	3.85	38.5	133.5×10^3	51.1×10^3	60	200	450	4.25
TOTAL	364	2.263×10^3 gal/Hr	52.1	131.3	9.05	9.05	90.5	313.9×10^3					

Table 4-1 (Cont.)

Source	Heat Input mm Btu/Hr	Fuel	Emissions lbs/Hr					Stack Parameters					
			Particulates	SO_2	Total Organics	CO	NO_x	Mass Flow lbs/Hr	ACFM	Velocity FPS	Height Ft.	Temperature °F	Diameter Ft.
5. Naphtha HDS													
A. Reactor Heater	50	311 gal/Hr	7.16	18.0	1.24	1.24	12.4	43.2×10^3	16.6×10^3	60	200	450	2.42
B. Reboiler Heater	24.6	153 gal/Hr	3.52	8.9	0.61	0.61	6.12	21.2×10^3	8.12×10^3	60	200	450	1.70
TOTAL	74.6	464 gal/hr	10.68	26.9	1.85	1.85	18.5	64.4×10^3					
6. Gasifier													
A. Oxygen Preheater	94.2	91.3×10^3 SCFH	1.64	2.46	0.27	1.55	21.9	83.1×10^3	33.1×10^3	60	200	450	3.42
B. Steam Superheater	85.4	82.9×10^3 SCFH	1.49	2.23	0.25	1.41	19.8	75.5×10^3	30.0×10^3	60	200	450	3.26
C. Recycle Char Htr I	140.4	136.3×10^3 SCFH	2.45	3.67	0.41	2.32	32.7	123.8×10^3	49.2×10^3	60	200	450	4.17
D. Recycle Char Htr II	115.8	112.5×10^3 SCFH	2.03	3.03	0.34	1.92	27.0	102.4×10^3	40.7×10^3	60	200	450	3.80
TOTAL	435.8	423×10^3 SCFH	7.61	11.4	1.27	7.20	101.4	384.8×10^3					

Table 4-1 (Cont.)

Source	Heat Input mm Btu/Hr	Fuel	Emissions lbs/Hr					Stack Parameters					
			Particulates	SO_2	Total Organics	CO	NO_x	Mass Flow lbs/Hr	ACFM	Velocity FPS	Height Ft.	Temperature °F	Diameter Ft.
7. Shift Conversion													
A. Boiler I	281.3	1.75×10^3 gal/Hr	40.25	101.5	7	7	70	242.9×10^3	92.8×10^3	60	200	450	5.73
B. Boiler II	212.1	1.32×10^3 gal/Hr	30.38	76.6	5.28	5.28	52.8	183.3×10^3	70.1×10^3	60	200	450	3.77
C. Hot Shift Htr	120.8	0.75×10^3 gal/Hr	17.25	43.8	3	3	30	104.0×10^3	39.8×10^3	60	200	450	3.75
TOTAL	614.2	3.82×10^3 gal/Hr	87.88	221.9	15.28	15.28	152.8	530.2×10^3					
8. Sulfur Recovery TGTU (4 stacks)				222.5				1.08×10^6	403.3×10^3	60	200	450	11.95
TOTAL				890				2.16×10^6	806.6×10^3				
9. Power Generation (6 units)	1118.7	1.09×10^6 SCFH	16.3	29.3	1.09	18.46	651.7	988.3×10^3	392.9×10^3	60	200	450	11.79
TOTAL	6712	6.52×10^6 SCFH	97.77	175.4	6.52	110.75	3910	5.93×10^6	2.36×10^6				
10. Steam Generation (6 units)	727.1	0.706×10^6 SCFH	10.6	19.0	0.71	12	423.8	641.7×10^3	255.3×10^3	60	200	450	9.50
TOTAL	4362.5	4.24×10^6 SCFH	63.5	114.0	4.25	72	2542.5	3850×10^3	1532×10^3				

Table 4-1 (Cont.)

Source	Heat Input mm Btu/Hr	Fuel	Emissions lbs/Hr						Stack Parameters					
			Particulates	SO_2	Total Organics	CO	NO_x	NH^3	Mass Flow lbs/Hr	ACFM	Velocity FPS	Height Ft.	Temperature °F	Diameter Ft.
1. Refining Misc.					2525							5		
2. Storage					10.4			40.6				50		
TOTAL			611.9	1957.7	2607.6	340.0	3507.5	40.6						

TABLE 4-2

EPA EMISSION FACTORS (EN-071)

	Fuel Combustion		
	Fuel Gas $lb/10^6 ft^3$		Resid Oil $lb/10^3 gal$
Emissions	Power Plant	Process Boiler	Process Boiler
Particulates	15	13	23
SO_2	0.6	0.6	157 S*
HC	1	3	3
CO	17	17	4
NO_x	600	230	40
Aldehydes	-	-	1

*wt % sulfur in the fuel oil.

plant emission factors for fuel gas combustion are used for the power and steam generation sources. Process boiler emission factors for residual oil are used for fractionation, fuel oil HDS, naphtha HDS, and shift conversion. Process boiler emission factors for fuel gas combustion are used at the remaining sources. Aldehyde emissions from fuel oil combustion are combined with hydrocarbon to give total organic emission. Sulfur dioxide emissions from these sources are determined by considering the fuel oil contains 0.3 wt % S and using the refinery emission standard of 0.10 gr H_2S/dSCF fuel gas.

Flue gas rates resulting from fuel combustion are calculated by assuming stoichiometric combustion and 20% excess oxygen. Combustion of one SCF of fuel gas results in 12.4 SCF of flue gas. Combustion of one gallon of fuel oil results in 1820 SCF of flue gas. A stack velocity of 60 FPS and a temperature of 450°F are assumed for dispersion modeling.

4.1.2 Coal Preparation

Entrained particulates are considered to be the only emissions from coal preparation. A particulate emission factor for a fluidized bed dryer of 20 lb/ton coal is used to determine the particulate emission rate (EN-071). This emission rate is reduced 85% considering the use of cyclones and another 95% by use of a bag filter (HI-083).

4.1.3 Sulfur Recovery

Sulfur dioxide is considered to be the only significant emission from this source. The sulfur dioxide emission is calculated by determining the following:

(1) %H_2S in the Claus plant charge. This value is approximately 55% for Illinois coal (HI-083).

(2) Claus plant efficiency. The efficiency of the Claus plant is estimated from the equivalent sulfur in the charge. Claus plant recovery efficiency is assumed to be 96% for the Illinois coal module (BA-166).

(3) Sulfur dioxide in the tail gas treating unit charge.

(4) Sulfur dioxide in the stack gas assuming a 95% removal efficiency in the tail gas treating unit (HI-083).

The Illinois coal module recovers 2,640 TPD sulfur with a sulfur plant emission of 890 lbs/hr SO_2.

Stack parameters are assumed to be 60 FPS and 450°F. A flow rate is calculated using literature information on inlet and outlet gas compositions from a tail gas treating unit and making a nitrogen balance (BE-148).

4.1.4 Ammonia Storage

The EPA emission factor (EN-071) for the storage and loading of ammonia (200 lb/ton NH_3) is used to determine ammonia emissions. This factor is reduced by 99% considering the use

of a packed tower scrubber. The amount of ammonia is calculated assuming that 40% of the nitrogen in the coal forms ammonia. Ammonia produced from the module is 487 TPD.

4.1.5 Petroleum Storage

The following assumptions based on literature data and experience are formulated to calculate the hydrocarbon emissions from petroleum storage:

(1) All feed and product storage is in floating roof tanks.

(2) Storage capacity is two weeks (HI-083).

(3) Only naphtha storage will result in significant emissions. Residual and distillate fuel oil storage create negligible emissions due to low vapor pressures.

Using petroleum storage emission factors for storing gasoline in floating roof tanks (0.033 lb/day - 10^3 gal) hydrocarbon emissions from storage are calculated to be 10.4 lb/hr. These emissions are assumed to occur at a height of fifty feet.

4.1.6 Miscellaneous Hydrocarbons

There can be numerous miscellaneous hydrocarbon emissions in the liquefaction upgrading facilities which escape from sources such as valve stems, flanges, loading racks, equipment leaks, pump seals, sumps, and API separators. These losses are discussed in Radian's Refinery Siting Report (RA-119). Based on literature data, Radian found that the miscellaneous hydrocarbon emissions amount to about

0.1 wt % of refinery capacity for a new well-designed, well-maintained refinery. This value of 0.1 wt % is used to determine miscellaneous emissions from the liquefaction upgrading facilities. The composition of these hydrocarbons can be expected to be a composite of all volatile intermediate and refined products. The emissions are assumed to occur at a height of five feet.

4.2 Water Effluents

Water effluents are nonexistent since the module is assumed to operate with zero discharge (HI-083).

4.3 Thermal

Thermal discharge to water bodies is zero since no water is discharged from the module.

4.4 Solid Wastes

Solid wastes are determined from the amount of ash in the coal and solids in the make-up water. Radian assumed 500 ppm solids in the make-up water. Solid wastes resulting from silt in the make-up water is 70 TPD. Ash produced by the module is 8,353 TPD for Illinois coal. Total solid waste from the module is 8,423 TPD.

APPENDIX C

III-F. OIL SHALE PROCESSING

1.0 INTRODUCTION

Oil shale is a naturally occurring deposit consisting of a mixture of several minerals and kerogen, a solid organic constituent which may be converted to conventional petroleum products. Oil shale may normally contain anywhere from 4.0 - 28.7 wt. % kerogen. A typical oil shale will contain approximately 12 wt. % kerogen or about 30 gallons of oil per ton of shale. Fischer assay data for various grades of oil shale are shown in Table 1-1. Typical organic and mineral matter contents for a 25 gallon of oil (per ton) shale is shown in Table 1-2.

In order to decompose the kerogen and obtain the hydrocarbon products, the shale must be heated to approximately 900°F. This heating step, which is a basic requirement of all shale oil processes, is normally accomplished in a retorting vessel; however, some processes propose to retort the oil shale underground (in situ). The manner in which the shale is retorted and the mechanism by which the necessary heat is supplied, characterize the various shale oil processes.

1.1 Basic Retorting Methods

Shale oil processes can basically be divided into two groups depending on whether the retorting is accomplished above or below ground (ex situ or in situ). Ex situ processes deal with more familiar technology and consequently are much more advanced. The intriguing advantage of in situ processing is the elimination of the massive solids handling and disposal problems associated with ex situ processes. A comparison of these two approaches to oil shale processing is shown in Figure 1-1.

TABLE 1-1

DATA OBTAINABLE FROM THE MODIFIED FISCHER ASSAY

	Typical Values			
	For Very Low Grade Shale	For Medium Grade Shale	For High Grade Shale	For Very High Grade Shale
Oil, gal/ton	10.5	26.7	36.3	61.8
Oil, weight percent	4.0	10.4	13.8	23.6
Water, weight percent	0.5	1.4	1.5	1.1
Spent shale, weight percent	94.4	85.7	82.1	70.4
Gas, weight percent	1.1	2.0	2.2	4.2
Loss, weight percent	-	0.5	0.4	0.7

Source: GA-107

TABLE 1-2

TYPICAL COMPOSITION OF OIL SHALE SECTIONS AVERAGING 25 GALLONS OF OIL PER TON IN THE MAHOGANY ZONE OF COLORADO AND UTAH

	Weight-percent
Organic matter:	
Content of raw shale	13.8
Ultimate composition:	
Carbon	80.5
Hydrogen	10.3
Nitrogen	2.4
Sulfur	1.0
Oxygen	5.8
Total	100.0
Mineral matter:	
Content of raw shale	86.2
Estimated mineral constitutents:	
Carbonates; principally dolomite	48
Feldspars	21
Quartz	13
Clays, principally illite	13
Analcite	4
Pyrite	1
Total	100

(Source: US-093)

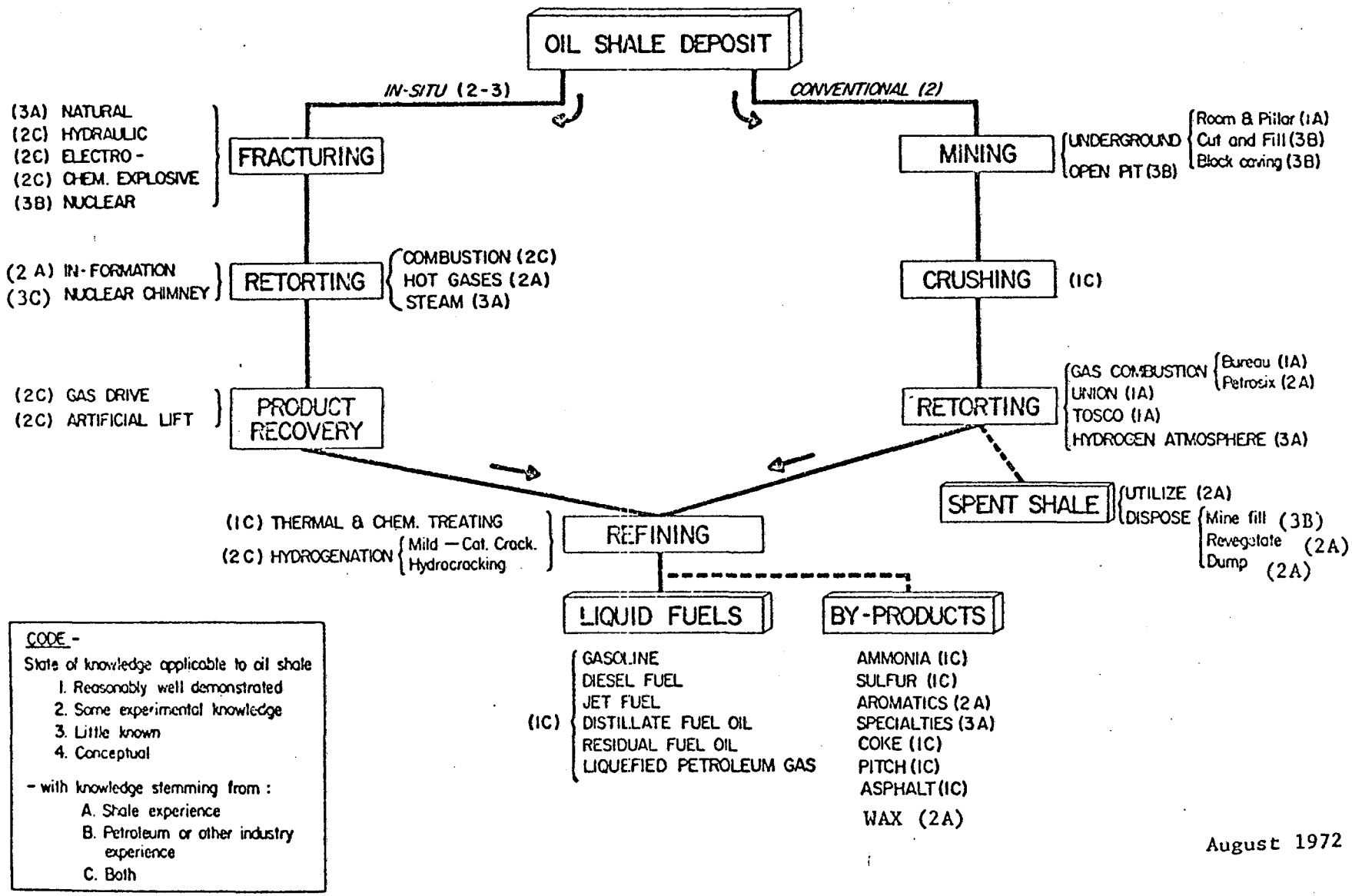

FIGURE 1-1 - RELATIVE STATE OF KNOWLEDGE OF VARIOUS OPERATIONS REQUIRED IN OIL SHALE PROCESSING (Source: US-093)

In situ processing involves fracturing the shale to allow injection of retorting fluids and the subsequent recovery of the oil through wells. Proposed methods for fracturing the shale include hydraulic, electric, chemical explosive and nuclear methods. Possibilities for retorting include underground combustion and injection of hot gases or steam. The products may be recovered by using either the pressure from retorting fluids or by applying artificial lift methods. Since in situ processes are still in the conceptual stage (US-093), they do not represent a viable alternative for shale oil recovery at this time.

Ex situ processes basically contain a retort, solids handling, and shale oil upgrading facilities. A flow diagram for a typical shale oil process is shown in Figure 1-2. Of the eight units shown, only the pyrolysis step (retorting) represents new technology. Shale oil upgrading is accomplished with conventional petroleum refining techniques. All shale oil processes can utilize the same shale oil upgrading facilities; however, the manner in which the retorting is accomplished and in particular the manner in which the necessary heat is supplied distinguishes the various process.

Current ex situ processes involve either solid-solid or solid-gas heat transfer. Processes which utilize solid-solid heat transfer rely on heated solids such as ceramic balls, sand, or spent shale particles to supply the retorting heat. Such processes heat the particles in an external heater and then mix them with the raw shale in the retort. After retorting, the heat-carrying solids must be separated for recycle from the spent shale. Ex situ processes which involve gas-solid heat transfer use either internal gas combustion or external heat generation. Processes utilizing internal gas combustion inject air directly into the retort. The heat liberated by the resulting combustion of fuel gas and carbon residue provides the

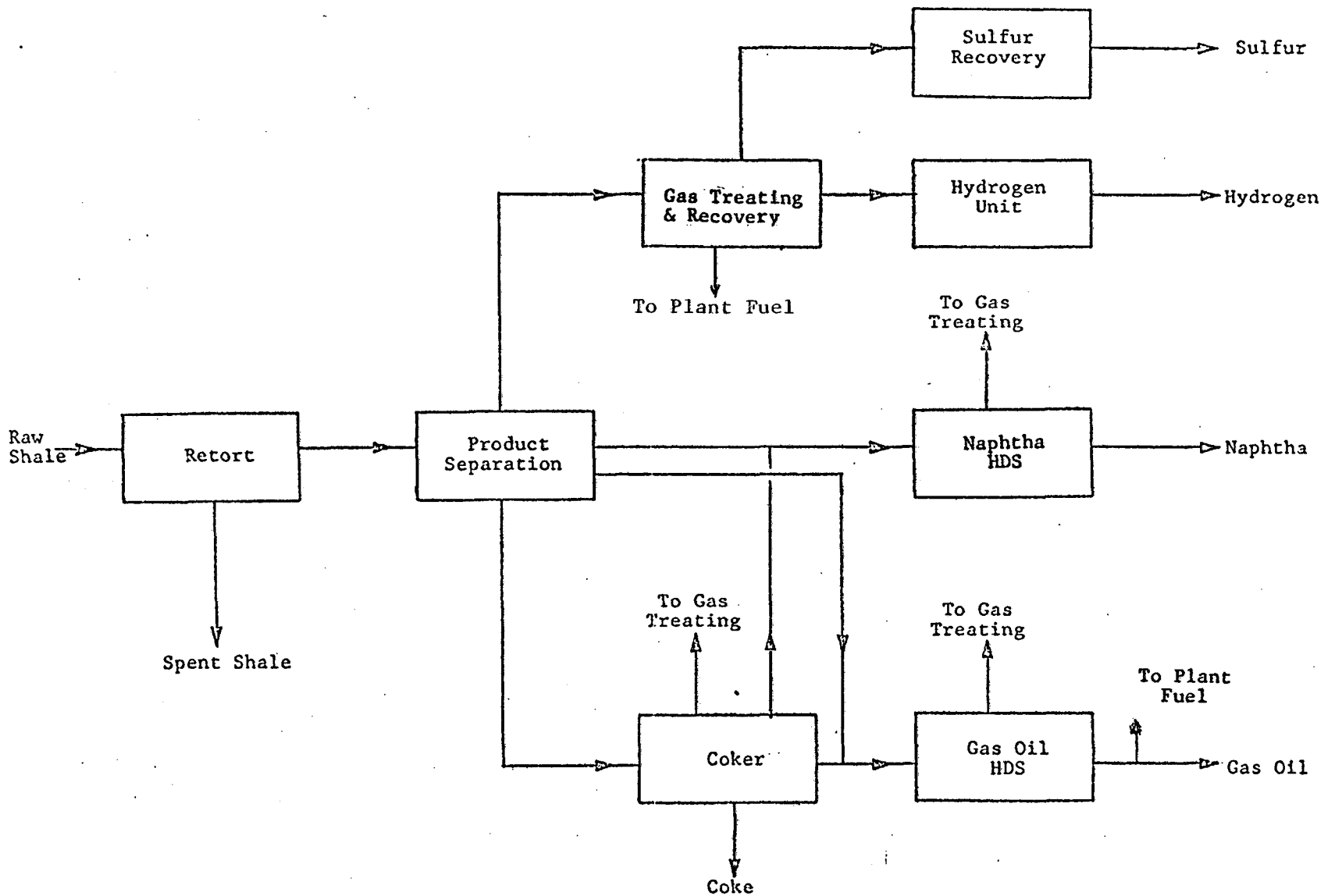

FIGURE 1-2 - TYPICAL SHALE OIL PROCESS

retorting temperature. Processes utilizing external heat generation normally rely on external heaters to provide a high temperature recycle gas which may be routed into the retort. The recycle gas increases the shale temperature to the required value of approximately 900°F.

These basic retorting methods are shown in Figure 1-3.

1.2 Common Technology

Many common features exist in the various shale oil processes. These common features result from the fact that certain basic processing steps must be performed in order to obtain a marketable hydrocarbon product from oil shale. These steps include retorting, oil recovery and fractionation, gas recovery and treating, sulfur recovery, heavy oil cracking, hydrotreating, ammonia separation, and water treating. Different shale oil processes use the same established technology for all of these operations except the retorting step. Although the effluent stream from each retort type differs, the same upgrading processes can be used.

A typical shale oil upgrading sequence is as follows.

(1) Effluent from the retort is cooled, allowing separation of light gases overhead and removal of water by use of knockout drums. The crude shale oil is routed to a fractionator for product separation. A typical fractionator separates the feed stream into gas, sour water, naphthas or light oil, and a heavy bottoms oil. A series of parallel operations follow the fractionation as product streams are upgraded and by-products recovered.

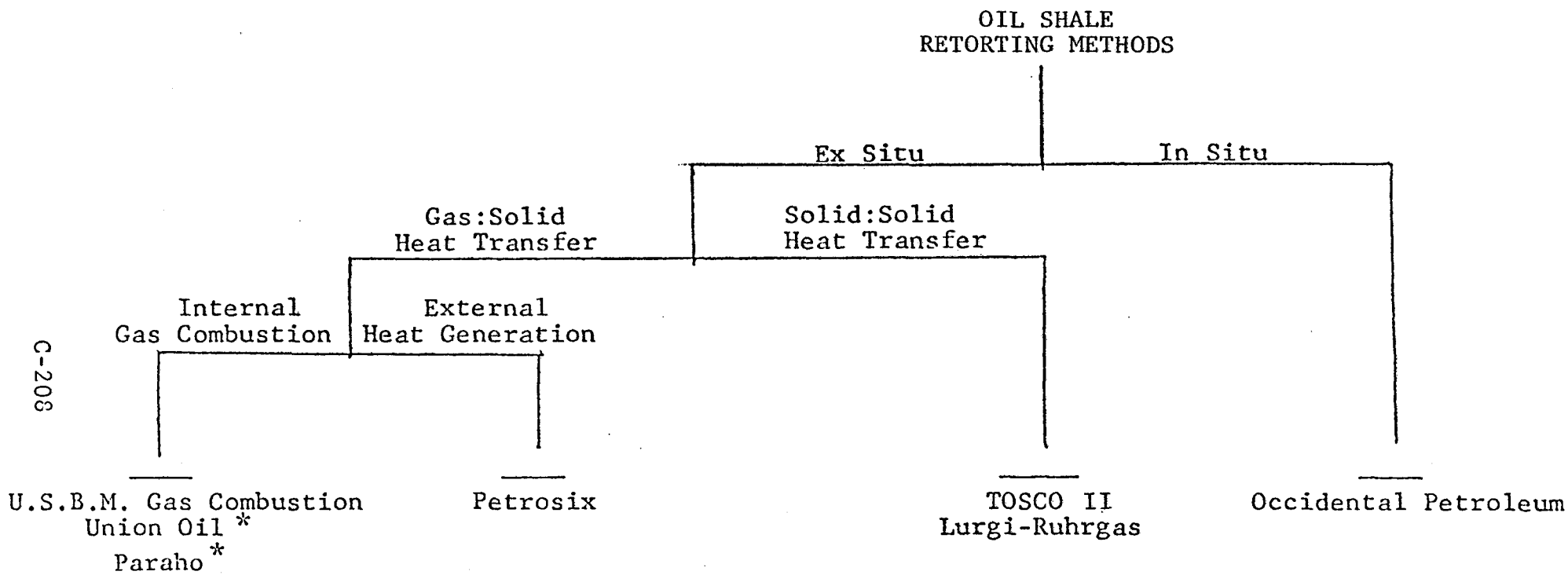

FIGURE 1-3 - CLASSIFICATION OF RETORTING METHODS

* Both Union Oil and Paraho have plans or capabilities to use external heating of recycle gas to provide the retorting heat (PF-003, LI-094).

(2) All gas streams produced in oil shale refining are routed to a gas recovery and treating unit. In this unit, heavy hydrocarbons (C_5^+) are recovered and returned to the light oil stream from the fractionator for processing. The gas is treated in an amine or other similar unit for removal of hydrogen sulfide and carbon dioxide. The clean gas may then be routed to boilers for power generation or to a methane/steam reformer for hydrogen generation. The acid gas is stripped from the amine sorbent and routed to a sulfur recovery unit.

(3) The sulfur recovery unit normally consists of a Claus plant working in conjunction with a tail gas treating unit. This unit should be capable of 99% sulfur recovery (HI-083). If the hydrogen sulfide concentration in the Claus feed is maintained at 40 vol % or higher, a three-stage Claus plant should recover approximately 95% of the equivalent sulfur in the charge. The gas stream containing approximately 5% of the original sulfur is routed to a tail gas treating unit. Performances of tail gas treating units vary; however, approximately 95% of the remaining sulfur should be removed. Some tail gas units reduce sulfur to the level of 250 ppm SO_2 in the effluent gas stream.

(4) Light distillate from the fractionator requires hydrotreating to remove impurities and to improve pour point and viscosity. Since hydrogen is required, a hydrogen generation unit is normally located on site. Hydrogen is produced from

plant fuel gas and steam in a conventional steam reforming process. Hydrotreated oil is routed to product tankage. Sour gas from the hydrotreater is routed to the gas recovery facilities.

(5) Fractionator bottoms are routed to a delayed coker for recovery of additional oil by thermal cracking. Oil from the delayed coker is routed to a gas oil hydrotreater. Gas produced from the thermal cracking is routed to the gas recovery facilities. A large percentage of the charge to the delayed coker is produced as coke. This coke may be either marketed as a by-product or used for process heat.

(6) An ammonia separation unit is used to remove ammonia from the hydrotreater wash water. The water is first stripped of any light hydrocarbons which are routed to the gas treating facilities. The ammonia is then removed in an ammonia stripper and compressed to form liquid ammonia.

(7) Not included in Figure 1-2, but necessary to all shale oil processing units, are extensive water-treating facilities. Process water requirements are expected to be a major problem, since many of the potential sites for shale oil development are located in water deficient areas. Careful water management and coordinated water-treating facilities are required to reduce make-up water requirements and to prevent water pollution. Maximum reuse is

anticipated if a goal of zero wastewater discharge is to be obtained. Water-treating facilities include mechanical draft cooling towers, strippers to remove NH_3 and H_2S, API separators, biological treating facilities, and containment/evaporation ponds.

1.3 Shale Oil Processes

The retort is the heart of the shale oil process. Most of the differences that exist between processes are a result of the retorting procedure. Specific retorts dictate how fine the ore must be crushed. The TOSCO retort requires ore ground to less than 0.5 inches while Union and Gas Combustion retorts can receive ore up to 3.5 inches in diameter. Operating conditions of the different retorts vary and this affects the product streams. A comparison of the effluent oil streams from three different retorts is shown in Table 1-3.

Gases produced in shale oil processes also vary significantly, depending on retort type. Gases from internal combustion retorts are diluted with combustion products and the inert components of the air. As a result, the gas has a low heating value (100 Btu/scf), and cannot be economically transported any significant distance. Gas produced from retorts which utilize indirect heating has a substantially higher heating value (≈800 Btu/scf). A comparison of gases from internal combustion and indirect heat retorts is shown in Table 1-4.

Physical properties and quality of the spent shale also change with the retort. The amount of carbonaceous material remaining on the shale is an inverse function of the retort temperature. The spent shale from a TOSCO retort

TABLE 1-3

CHARACTERISTICS OF CRUDE SHALE OILS

	Retorting process		
	Gas Combustion	Union 1/	TOSCO 2/
Gravity, °API	19.7	20.7	28.0
Sulfur, wt-pct	0.74	0.77	0.80
Nitrogen, do.,	2.18	2.01	1.70
Pour Point, °F	80	90	75
Viscosity, SUS @100 °F	256	223	120
Reference Source	(10)	(40)	(28)

1/ Typical of product from original Union process.

2/ Unpublished information submitted by Colony Development Operation indicates TOSCO crude shale oil may have gravity as low as 21°API and sulfur content of 0.75 wt-pct

(Source: US-093)

TABLE 1-3

CHARACTERISTICS AND YIELDS OF UNTREATED RETORT GASES

	Type of Retorting Process			
	Internal Combustion		Indirectly Heated	
Composition, vol. pct	2/	2/	As Produced	After Desulfurization
Nitrogen 1/	60.1	62.1	--	---
Carbon monoxide	4.7	2.3	4.0	4.2
Carbon dioxide	29.7	24.5	23.6	24.8
Hydrogen Sulfide	0.1	0.1	4.7	(0.02)
Hydrogen	2.2	5.7	24,8	26.0
Hydrocarbons	3.2	5.3	42.9	45.0
Gross Heating Value, Btu/scf	83	100	775	815
Molecular Weight	32	30	25	24.7
Yield, scf/bbl oil 3/	20,560	10,900	923	880

1/ Includes oxygen of less than 1.0 volume percent.
2/ First analysis reflects relatively high-temperature retorting in comparison with second, promoting higher yield of carbon oxides from shale carbonate and relatively high yield of total gas.
3/ Oil from the retort.

(Source: US-093)

(low temperature) contains 5-6% carbonaceous residue; spent shale from the Union retort (high temperature) contains essentially no carbon.

Regardless of the retort type, all processes can utilize cracking and hydrotreating processes to upgrade the retort oil to distillate fuel quality. Properties of an upgraded shale oil are as follows.

Gravity °API	46.2
Sulfur wt. %	0.005
Nitrogen wt. %	0.035
Pour Point °F	<50.
Viscosity, SUS at 100°F	40.

1.3.1 TOSCO II

The TOSCO II process features a rotary-type retort which utilizes ceramic balls to supply the retorting heat by solid-solid heat transfer. A simplified flow diagram of the TOSCO retorting step is shown in Figure 1-4. Raw shale feed of minus 0.5 inches is fed from a surge hopper to a raw shale preheater. The incoming shale is preheated to approximately 500°F by contact with hot flue gas from the ceramic ball heater. The preheating is accomplished in a fluidized bed with the crushed shale being entrained by the hot flue gas. The preheater effluent is routed to settling chambers and cyclones in order to separate the preheated shale from the flue gas. Following shale separation the cooler flue gas, which has been incinerated within the preheat system to reduce trace hydrocarbons, is passed through a high energy venturi to remove shale dust before being vented to the atmosphere at a temperature of 125-130°F.

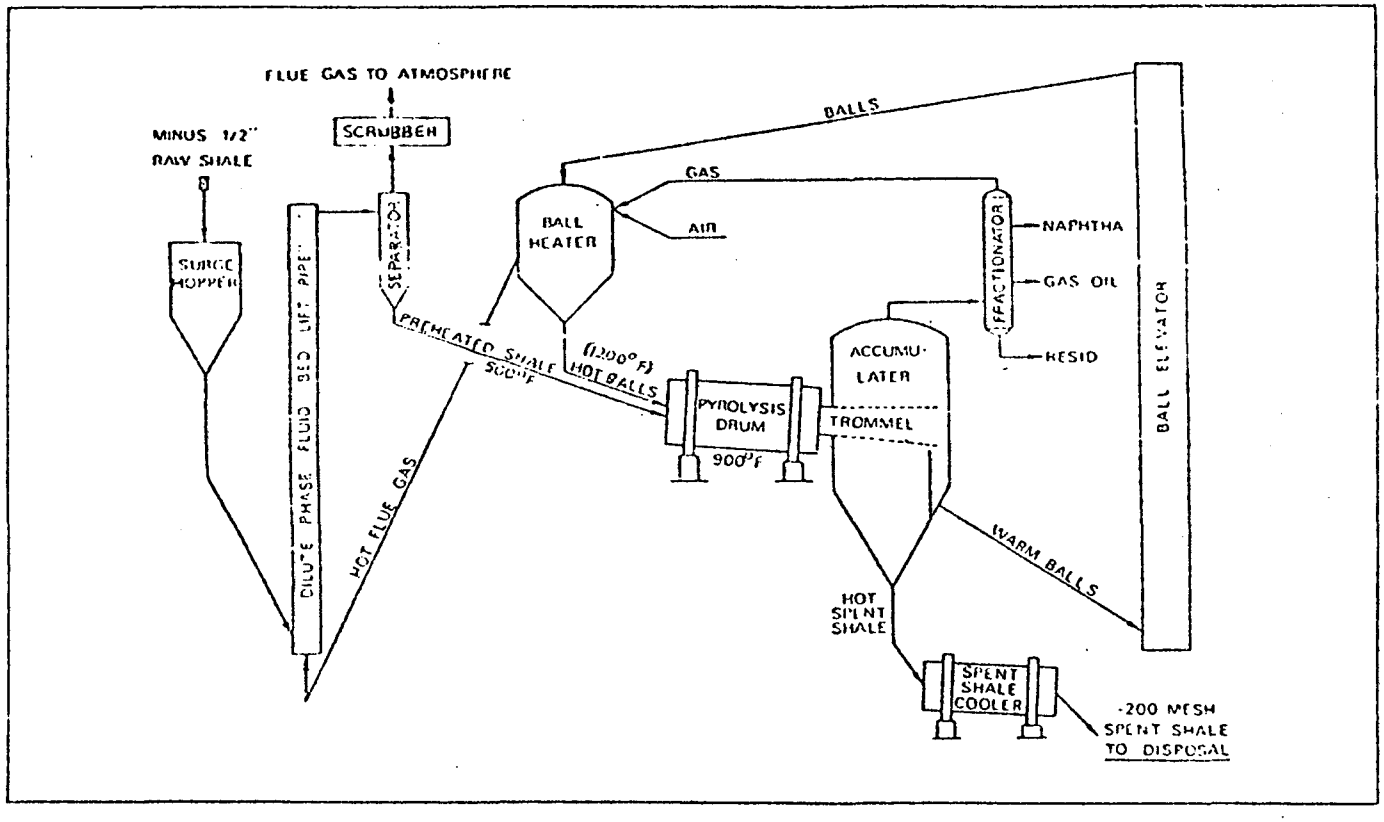

FIGURE 1-4 - TOSCO II RETORTING PROCEDURE

Preheated raw shale from the cyclone separators is routed to the rotary drum retort. High-alumina content ceramic balls of one-half inch diameter are combined with the raw shale in the retort. The balls are heated to approximately 1200°F in a furnace fired by product fuel gas. The retort temperature is maintained at 900° by combining two tons of ceramic balls with every ton of feed shale. An internal pressure of 5 psig is maintained to prevent the entrance of air. The rotating retort is essentially a ball mill. As the kerogen decomposes, the shale oil loses strength and is pulverized by the ceramic balls. Approximately 5-6% carbonaceous material remains on the shale. An advantage of utilizing indirect heating rather than direct gas combustion is that the fuel gas produced is not diluted by combustion products and consequently has a higher heating value. Approximately 900 scf of fuel gas with a heating value of 800 Btu is produced per bbl of oil recovered from the retort.

Retort products are routed to an accumulator where the solids are passed over a trommel screen to separate the balls from the spent shale. The ceramic balls are recycled to the vertical ball heater by means of a bucket elevator. In the ball heater fuel gas is combusted to heat the balls to 1200°F.

The spent shale is cooled in a rotating drum steam generator. After cooling, the processed shale is moisturized to approximately 14% moisture content in a rotating drum moisturizer. Steam and shale dust produced during the moisturizing step are routed through a venturi scrubber to remove the dust. Following moisturizing, the spent shale and dust collected from the various venturi scrubbers is conveyed to a disposal site.

Hydrocarbon vapors are routed overhead from the accumulator to a distillation tower. The retort products are normally separated into gas, sour water, naphtha, gas oil and bottom oil streams. A series of parallel operations follow the fractionation step as product streams are upgraded and by-products recovered.

A flow diagram of the shale oil upgrading procedure is shown in Figure 1-5. Units shown include gas recovery and treating facilities, naphtha and gas oil hydrotreaters, delayed coker, hydrogen generation unit, water treating facilities, sulfur recovery unit, ammonia separation unit and steam and electric power generation facilities. Gas from the accumulator is either routed to gas recovery and treating and then recycled to the ball heater for combustion or sent to the hydrogen generation unit. The naphtha is normally stabilized and then hydrotreated. The gas oil streams are also hydrotreated. Bottoms oil from the fractionator is thermally cracked by use of a delayed coker to recover additional oil. This produces a coke by-product. All H_2S rich gas streams are routed to the sulfur recovery unit. Wash water from the hydrotreaters is stripped at an ammonia separation unit. Water removed from gas streams is routed to a foul water stripper to remove ammonia and hydrogen sulfide. The stripped water is used for moisturizing the spent shale.

Air emission sources for this process are the preheat system, steam superheaters, moisturizing system, process heaters, sulfur recovery unit, crushing and conveying, power generation, hydrocarbon storage and fugitive losses. Air emissions for a 50,000 BPCD TOSCO II process are presented in an Air Quality Assessment of the Oil Shale Development Program (EN-204). These emissions are shown in Table 1-5. Hydrocarbon storage and fugitive hydrocarbon losses are not included.

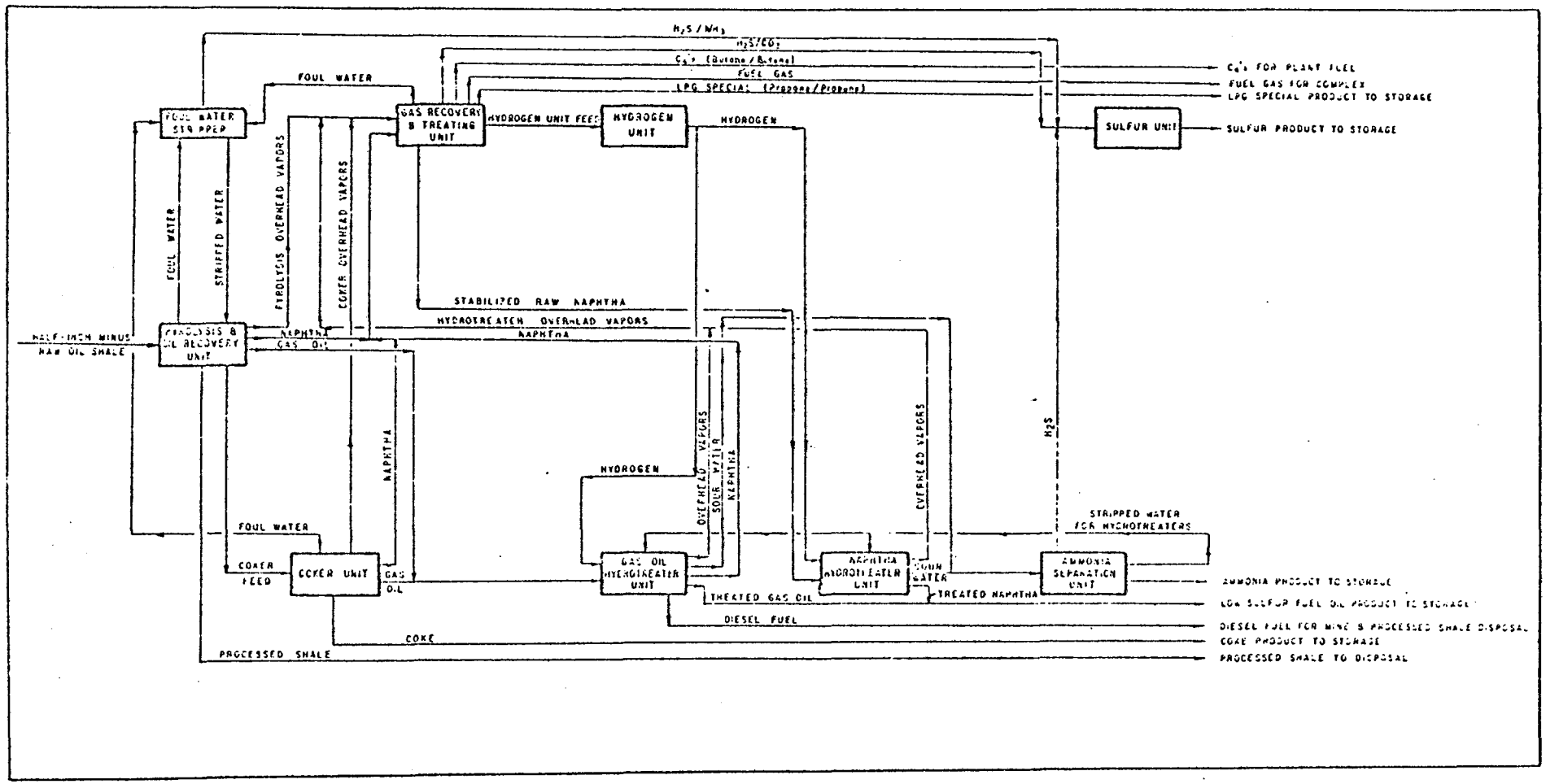

FIGURE 1-5 - UPGRADING AND BY-PRODUCT RECOVERY FACILITIES

TABLE 1-5

AIR POLLUTION EMISSIONS FROM THE TOSCO II PROCESS

(50,000 bbl/cd)

PROCESS	Emission Rates (tons/year)[a]				Total Exhaust Flow (acfm)	Stack Parameters		
	SO_2	Particulate	NO_x	THC		Exit Temp (°F)	Radius (ft)	Height (ft)
Pyrolysis and Oil Recovery Unit								
Preheat Systems-6 stacks	2,873	526	3,460	1,314	1,272,000	130	4.6	275
Steam Superheaters-Ball	552	1,051	661	17	265,800	150	2.7	300
Moisturizing Systems-6 stacks	NG	1,183	NG	NG	226,400	184	2.7	50
Hydrogen Unit								
Reforming Furnaces-2 stacks	372	50	399	8	296,420	184	2.9	100
Gas Oil Hydrogenation Unit								
Reactor Heaters-2 stacks	88	9	105	3	21,000	900	1.2	100
Reboiler Heater	276	28	333	8	53,000	700	2.6	100
Naptha Hydrogenation Unit								
Reactor Heater	31	3	35	1	5,250	800	1.2	100
Sulfur Recovery Unit								
Sulfur Plants with common Tail Gas Plant	460	NG	NG	NG	64,900	125	2.0	250
Crushing and Conveying	NG	276	NG	NG	630,000	60	3.0	50
Delayed Coker								
Heater	307	31	368	9	42,000	350	(3.0)	200
Utilities	876	88	1,051	26	NG	NG	NG	NG
TOTAL	5,835	3,245	6,412	1,386				

[a]Data reflect Mode 1 operation, expected 2/3 of the time

(Source: EN-204)

1.3.2 Lurgi-Ruhrgas

The retorting step of the Lurgi-Ruhrgas process is shown in Figure 1-6. The Lurgi-Ruhrgas process utilizes small solids such as sand grains, coke particles, or spent shale to convey heat to the incoming oil shale. The solids are preheated and mixed with raw shale in the retort. The retort is a sealed screw-type conveyor. The effluent from the retort is discharged into a bin for separation. Solids are removed from the lower part of the bin for recycle. Product vapors are removed overhead for dust removal, condensation, and product upgrading.

1.3.3 U.S.B.M. Gas Combustion

The U.S.B.M. Gas Combustion retort is a vertical, refractory-lined vessel. Coarsely ground shale oil is introduced at the top and flows by gravity downward through the retort. Although no physical barriers are present in the vessel, the retort may be considered to consist of four sections. These four zones are shale preheating, retorting, combustion, and cooling.

Combustion air and recycle gas are injected into the combustion zone, approximately one-third of the way up the retort. Combusion of the gases with residual carbon on the spent shale liberates the heat necessary for retorting. Combustion temperature is approximately 1200-1400°F. Retorting occurs above the combustion zone. Product vapors from the retorting section are cooled by the incoming shale and removed overhead. Heat exchange between product vapors and the raw shale serves to preheat the shale prior to retorting. Following combustion, spent shale is cooled and removed from the

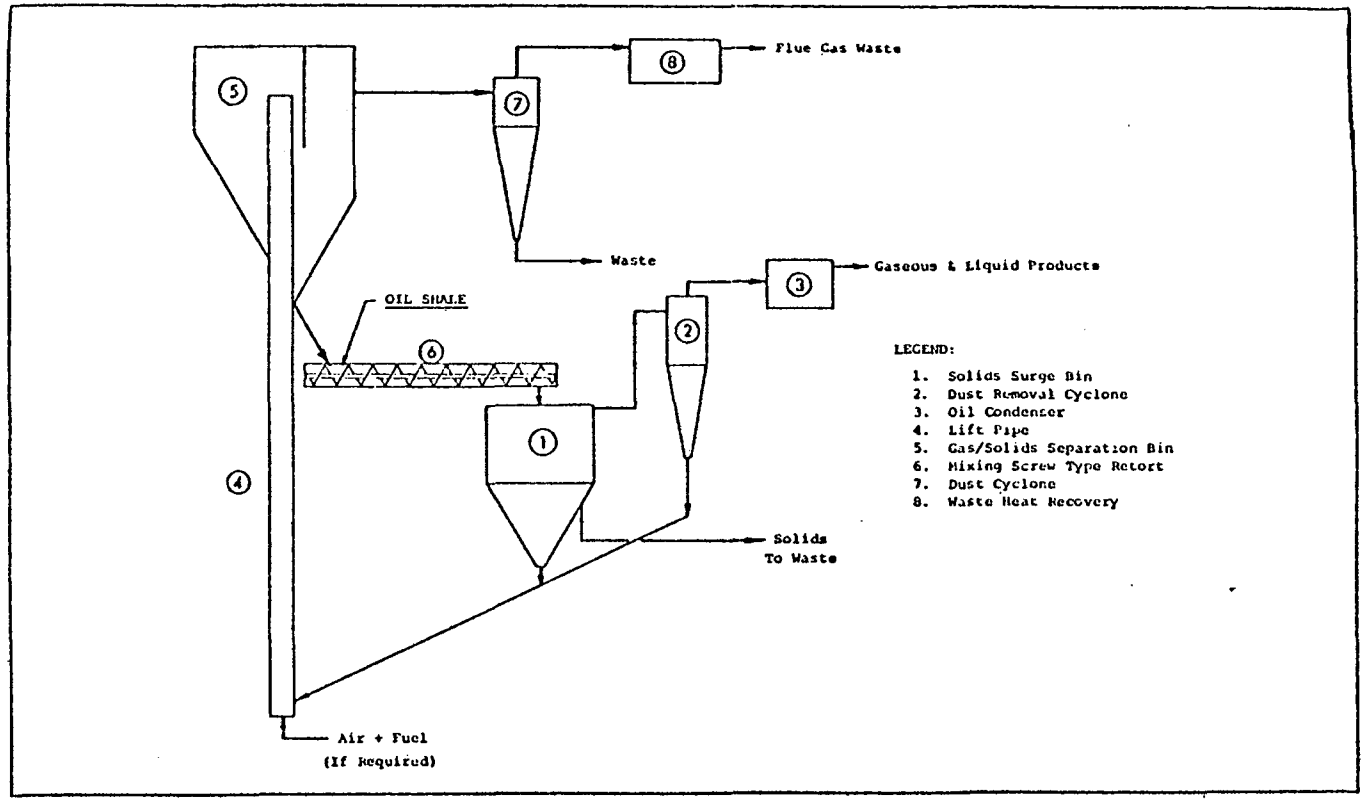

FIGURE 1-6 - THE LURGI-RUHRGAS OIL SHALE RETORTING PROCESS

(Source: GA-107)

bottom of the retort. Recycle gas entering at the bottom of the retort is used to cool the spent shale. The Gas Combustion retorting process is shown in Figure 1-7 along with a typical temperature profile through the retort.

Performance data for the 150 tpd gas combustion retort at Anvil Points, Colorado, are shown in Table 1-6.

1.3.4 Union Oil

The Union Oil process utilizes internal gas combustion to provide the retorting heat. The retort is a vertical refractory-lined vessel in the shape of an inverted cone. The top of the retort is open to the atmosphere. Air enters from the top while the shale is charged from the bottom by a "rock pump." Combustion of the organic matter remaining on the shale heats the shale by direct gas-to-solids exchange. Maximum shale temperature in this process is approximately 1800°F. Spent shale solids overflow the vessel at the top. The product oil is cooled by the incoming shale and removed through an outlet at the bottom of the retort. The Union Oil Retort is shown in Figure 1-8. Operating conditions and yields for this process are shown in Table 1-7. Union Oil is currently testing modifications of the process, such as external heating of recycle gas, on a 3 tpd pilot plant (LI-094).

1.3.5 Paraho Process

The Paraho retort has the capability of using either direct gas combustion or externally heated recycle gas to achieve the required 900°F temperature (PF-003). Coarsely ground shale oil is introduced at the top of a vertical retort and flows by gravity downward through the vessel. Combustion air and recycle gas (or heated recycle gas) are introduced at several points

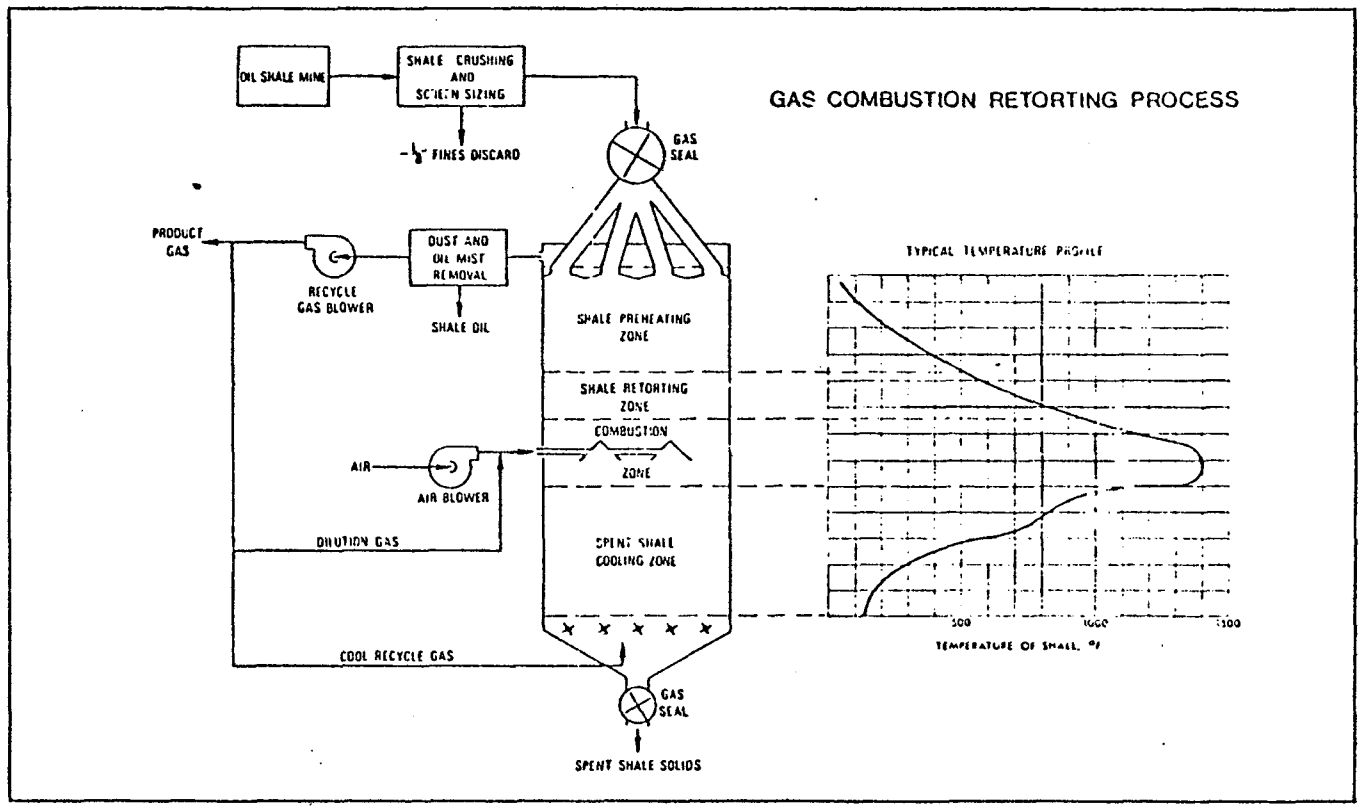

FIGURE 1-7 - GAS COMBUSTION RETORTING PROCESS

(Source: GA-107)

TABLE 1-6

PERFORMANCE DATA FROM OPERATION OF THE REBUILT AND MODERNIZED 150 TPD GAS COMBUSTION RETORT AT ANVIL POINTS, COLORADO

(data source: USBM Report of Investigations 7540)

Run number	C-1028-6	C-1028-7	C-1028-8	C-1028-9	C-1028-10	C-1029-1	C-1029-2	C-1031-1	C-1031-2
Date	4/14/67	4/14/67	4/15/67	4/15/67	4/16/67	4/19/67	4/19/67	4/23/67	4/23/67
Length of run....hr.	12	12	12	12	12	12	12	12	12
Air-gas distributor type	6	6	6	6	6	6	6	6	6
Condenser type	ESP	ESP	ESP	ESP	ESP	ESP	ESP	ESP	ESP
In-line burner used	No	No	No	No	No	No	No	No	No
Shale feed properties:									
Average Fischer assay...gal/ton.	25.5	25.1	26.4	24.4	23.6	26.5	26.7	25.7	25.8
Oil content....wt pct.	9.6	10.0	10.0	9.3	9.0	10.1	10.1	9.8	9.8
Size range....in.	1-2-1/2	1-2-1/2	1-2-1/2	1-2-1/2	1-2-1/2	1-2-1/2	1-2-1/2	3/4-2-1/2	3/4-2-1/2
Operating conditions:									
Bed height....ft.	12.5	12.5	12.5	12.5	12.5	12.5	12.5	10.5	10.5
Feed rate....lb/hr.	27,665	27,682	27,742	27,713	27,332	27,448	27,267	27,574	27,623
Mass feed rate....lb/(hr)(ft^2).	501	501	502	502	495	497	494	499	500
Air rate....scf/ton.	4,710	4,736	4,693	4,755	4,657	4,765	4,801	4,722	4,717
Air static pressure....in H_2O.	124	128	125	123	107	120	129	114	109
Air temperature....° F.	138	150	147	143	140	143	143	135	135
Recycle gas rate....scf/ton.	12,918	12,929	12,944	12,990	12,795	12,533	12,323	12,534	12,479
Recycle gas temperature....° F.	250	250	242	231	232	215	215	218	219
Dilution gas rate....scf/ton.	0	0	0	0	0	0	0	0	0
Dilution gas temperature....° F.	-	-	-	-	-	-	-	-	-
Retort offgas pressure...in H_2O.	0	-0.07	0	-0.08	0.02	-0.10	-0.06	0.11	-0.08
Retort offgas temperature...° F.	140	139	139	137	138	139	138	137	139
Vent gas rate....scf/ton.	7,291	7,315	7,253	7,051	7,003	7,265	7,202	7,246	7,559
Vent gas temperature....° F.	240	243	232	227	240	218	231	244	250
Spent shale temperature....° F.	392	396	381	379	396	357	364	368	383
Retort top pressure....in H_2O.	0	-0.07	0	-0.08	0.02	-0.10	-0.06	0.11	-0.08
Retort bottom pressure...in H_2O.	10.3	10.7	10.2	10.1	8.9	11.1	10.5	9.9	10.2
Blower outlet pressure...in H_2O.	71	69	69	71	67	69	69	68	71
Oil recovery (water-free):									
Gal/ton of shale feed	21.0	21.8	21.5	20.2	18.6	23.3	22.6	21.5	21.7
Wt pct of Fischer assay	85.2	85.0	83.6	84.7	80.7	90.1	87.1	85.7	86.1
Product oil properties:									
Wt pct H_2O	6.0	5.1	5.8	3.9	2.3	4.8	6.6	10.0	5.8
Gravity....° API.	19.7	19.7	19.3	19.8	19.7	19.4	19.7	19.5	19.6
Spent shale properties:									
Oil content....gal/ton.	0	0	0	0	0	0.2	0.2	0	0.4
Oil content....wt pct.	0	0	0	0	0	0.1	0.1	0	0.1

(Source: GA-107)

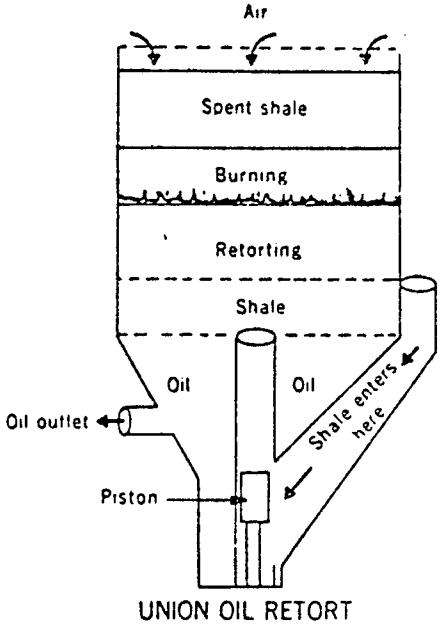

UNION OIL RETORT

Shale is introduced near bottom of retort and forced upward. Air enters at the top and flows downward.

FIGURE 1-8 - UNION OIL RETORT

(Source: US-093)

TABLE 1-7
OPERATING CONDITIONS AND YIELDS
UNION OIL RETORT

Shale feed	
Fischer assay----------gal./ton----------	27.9
Total feed (wet)----------tons----------	157.7
Feed rate (dry)----------tons/day----------	25.44
Retorting conditions	
Retorting rate, lb. shale/hr./sq. ft. bed area	138
Air requirements----------s.c.f./ton shale----------	10,700
Superficial linear gas velocity, ft./sec.	0.32
Retort pressure (top)----------	atm.
Pressure drop across bed--------inches H_2O----------	7.5
Temperatures, °F.	
Combustion zone----------	2200
Ash out----------	800
Products out----------	125
Oil production	
Light oil (C_4-C_5)----------gal./ton feed----------	2.6
Mist----------do----------	1.4
Oil in sludge----------do----------	0.2
Liquid oil collected----------do----------	23.6
Total oil produced----------do----------	27.8
Total oil----------vol. % Fischer assay----------	99.5
Oil recovery	
Oil collected----------gal.ton feed----------	23.6
Oil collected----------wt. % Fischer assay----------	86.2
Oil collected----------vol. % Fischer assay----------	84.4
Oil yield summary	
Oil yield (incl. mist and sludge) gal./ton----------	25.2
Oil yield (do)---------wt. % Fischer assay----------	92.3
Oil yield (do)---------vol. % Fischer assay----------	90.4
Fuel gas production	
Wet gas----------s.c.f./ton feed----------	17,350
Dry gas----------do----------	14,430
Product properties	
Properties of oil	
Gravity----------°A.P.I. @60°F.----------	20.7
Specific gravity---------- @60°F.----------	0.9297
Viscosity----------S.U.S.@122°F.----------	113
Viscosity----------S.U.S.@210°F.----------	46
Pour point----------°F.----------	90
Sulfur----------Wt. %----------	0.81
Nitrogen----------do----------	1.90
Water----------vol. %----------	trace
Ash----------Wt. %----------	0.04
Distillation	
Initial----------	285
10----------	509
20----------	576
30----------	622
40----------	666
50----------	628
60----------	701
70----------	cracked
Properties of fuel gas	
Gross heating value (dry)---B.t.u./s.c.f.----------	80.8
Water content----------vol. %----------	12.4
Analysis (dry basis)----------mol. %----------	
Air----------	2.2
N_2----------	56.9
A----------	0.7
CO----------	4.6
CO_2----------	30.3
H_2----------	2.2
H_2S----------	0.1
C_1----------	0.9
C_2----------	0.6
C_2----------	0.4
C_3----------	0.4
C_3----------	0.2
C_4----------	0.3
C_4----------	0.1
C_5----------	0.1
Properties of ash	
Organic residue content----------Wt. %----------	0.08
Mineral carbonate content----------Wt. % CO_3----------	0.49

(Source: GA 107)

in the retort, flowing upward (countercurrent) to the shale. Combustion of these gases with the residual carbon on the shale liberates the heat necessary for retorting. If heated recycle gas is utilized, then steam will provide the heat necessary for retorting. Spent shale is removed from the bottom of the retort. Shale oil vapors leave overhead, passing through an electrostatic precipitator and then to a gas recovery unit. A portion of the noncondensible gas is returned to the retort as combustion gas with the remainder routed to a waste heat boiler. The Paraho retort is shown in Figure 1-9.

1.3.6 Petrosix

The Petrosix process is similar to the gas combustion process used by the Bureau of Mines except that in the Petrosix process, externally heated recycle gas is injected into the retort rather than combustion air. A vertical kiln retort is used. Crushed shale enters at the top and moves down through zones of preheating, retorting, and cooling. The heat is supplied by a recycle gas stream which is heated in a separate furnace. The heated recycle gas is injected into the retorting area of the vessel. Since heat generation is external, a combustion zone is not present in this retort. Retorting products moving upward in the vessel are cooled by incoming raw shale prior to leaving the retort. An unheated recycle gas stream is injected at the bottom of the retort to recover sensible heat and to cool the spent shale. Spent shale is removed at the bottom of the vessel and slurried to a disposal area. A flow diagram of the Petrosix process is shown in Figure 1-10.

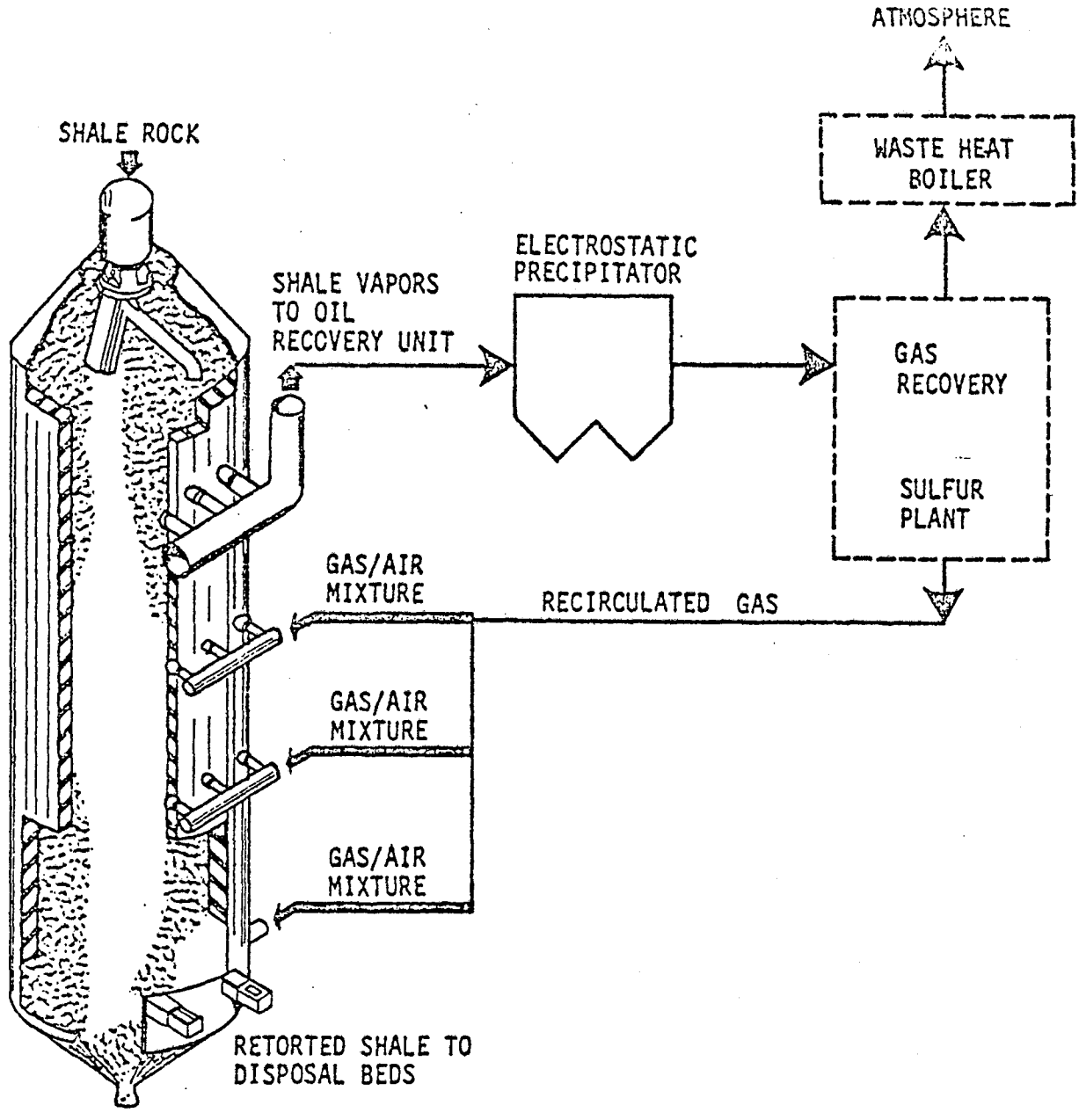

FIGURE 1-9 - THE PARAHO RETORT PROCESS

(Source: EN-204)

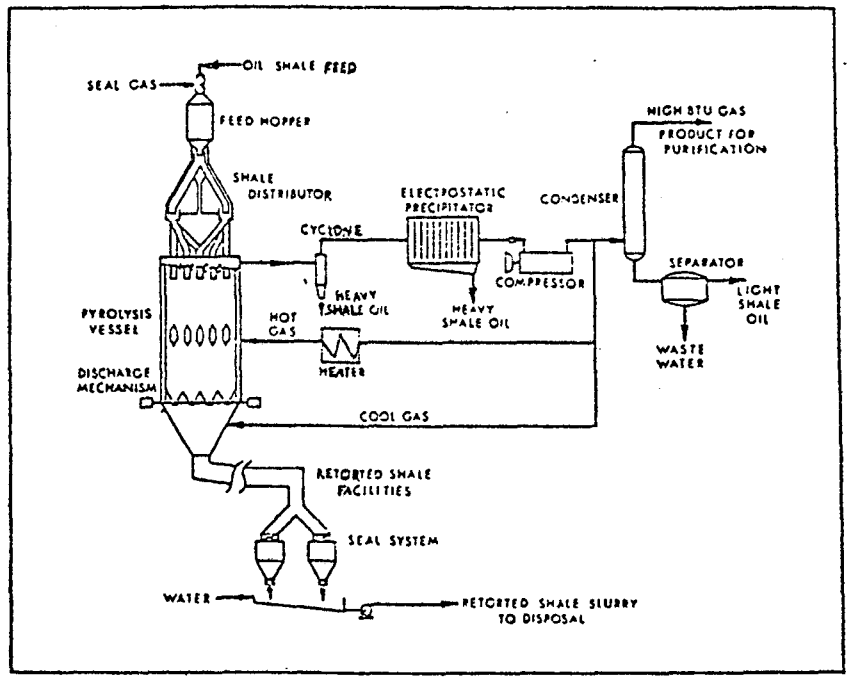

FIGURE 1-10 - PETRO-SIX PROCESS FLOW DIAGRAM
(Source: GA-107)

1.4 State of the Art

Of the two general approaches to shale oil processing, only ex situ processes have advanced to the stage where commercial production may be achieved in the near future. In situ processing is still in the experimental stage. Although both laboratory and field research has been undertaken, an in situ technique has not been successfully developed or demonstrated. However, demonstration or pilot plants have been operated for a number of the ex situ processes. Among these are the following:

- U. S. B. M. Gas Combustion - tested on 150 tpd unit,
- Union - tested on 350 tpd unit, variation tested on 3 tpd pilot plant,
- TOSCO II - tested on 1000 tpd unit, constructing 66,000 tpd commercial plants,
- Lurgi-Ruhrgas - tested on 12 tpd unit, and
- Petrosix - 2200 tpd demonstration plant, in operation

Colony Development Operation, comprised of Atlantic Richfield, Standard Oil of Ohio, TOSCO, and Cleveland Cliffs Iron Company, has plans for a commercial plant at Parachute Creek, Colorado. This plant will consist of six TOSCO II retorts, each capable of processing 11,000 tpd of raw shale. Approximately 50,000 bpd of synthetic crude will be produced.

Development Engineering, Inc., is in the process of engineering a full-scale demonstration unit of the Paraho process at the Anvil Points facility in Colorado. The capacity of this demonstration plant will be 500 tpd (SH-157).

1.5 Problem Areas

Areas in which problems exist for oil shale processes are as follows:

(1) Thermal Efficiency - The low thermal efficiency of oil shale processes dictates an intensive effort to recover energy. Most oil shale processes claim an efficiency between 60 and 70% (heating value liquid products x 100/heating value raw shale). Much heat is required to decompose the kerogen which cannot be recovered as liquid fuel. Any processing techniques that will increase the efficiency should boost the potential of oil shale processing as a viable alternative for the production of liquid fuels.

(2) Water Management - Large amounts of makeup water are required in oil shale processes for use in steam generation, as process water, and for cooling, shale disposal, and revegetation. Design for the TOSCO II plant estimates a water demand of 4970-5600 gpm depending on water requirements for revegetation. Due to the trace elements and other pollutants in oil shale, the scarcity of water at many potential plant sites, and increasingly stringent clean water legislation, shale processing plants will probably be required to achieve zero water discharge status. In order to obtain this goal a comprehensive water management program coupled with extensive water treating facilities will be required. Such facilities will include fan air coolers, mechanical draft cooling towers, strippers to remove NH_3 and H_2S, API separators, biological

treating facilities, and containment/evaporation ponds. It should be noted that much work is still required in this area and that much is still unknown about the ability to clean up shale oil processing water. For instance, high concentrations of certain trace elements or trace organics may have an adverse effect on the bacteria used in biological treating facilities. New technical developments may have to occur before a zero water discharge can really be achieved.

(3) Solids Handling - Another major problem area is connected with solids handling and disposal. An immense solids handling problem results from commercial scale oil shale processing due to the low concentration of oil in the shale (30-40 gal/ton). A typical oil shale plant charging 72,700 tpd of 30 gal/ton shale is estimated to produce 60,000 tpd of spent shale (US-093). In addition, the spent shale is less compact and is approximately 12 vol % larger than the raw shale. Current designs call for disposal at the mine site; however, even underground mines can only accommodate 60% of the spent shale below the surface. Therefore, surface area for containment must be provided.

(4) Land Reclamation - Due to the land impact resulting from spent shale disposal and raw shale mining, oil shale processing operations will require land reclamation. However, procedures required to properly revegetate this land have not been adequately defined. Total cost, time, and water involved are not accurately established.

2.0 MODULE BASIS

The module calculations discussed here are based on an oil shale processing plant producing 10^{12} Btu per calendar day* of primary liquid fuels. For an oil shale processing facility these primary fuels include naphtha, distillate oil and/or residual oil. The thermal efficiency ** selected for this module is 66.7%. This value is the efficiency assigned by Hittman (HI-083) to the TOSCO II process. This particular efficiency is used here since the TOSCO II process appears to be the most advanced process and the first one likely to reach commercial operation. In addition, the environmental impact analysis for the TOSCO II plant at Parachute Creek, Colorado, provides a good source of information on emission sources and fuel requirements. Using a 66.7% primary efficiency, a charge rate of approximately 199,100 tpd of raw shale (3765 Btu/lb) is determined. A summary of emissions from the oil shale plant is presented in Table 2-1.

---

* All rates presented for this module are on a calendar day basis.

** Heating value of primary fuels divided by heating value of raw shale feed times 100.

TABLE 2-1

SUMMARY OF ENVIRONMENTAL IMPACTS

SHALE OIL RETORTING AND UPGRADING MODULE

(Basis: 10^{12} Btu Output Liquid Fuel)

Air (lb/hr):	
Particulates	453.6
SO_2	5324.1
NO_x	1966.7
CO	174.5
HC	2652.3
Water (lb/hr):	
Suspended Solids	0.
Dissolved Solids	0.
Organic Material	0.
Thermal (Btu/hr):	0.
Solid Wastes (tons/day):	164.3×10^3
Land Use (acres):	2000.
Water Requirements (gal/day):	21.1×10^6
Occupational Health (per year):	
Deaths	0.755
Injuries	79.2
Man-Days Lost	77.0
Efficiency (%):	
Primary Fuels Efficiency	66.7
Total Fuels Efficiency	79.7
Overall Efficiency	76.9
Ancillary Energy (Btu/day):	5.59×10^{10}

3.0 MODULE DESCRIPTION

This oil shale module is concerned with the retorting and shale oil upgrading steps. Raw shale extraction and crushing are not included in this module. The primary fuels from this module are naphtha and fuel oil. The raw shale required by a 10^{12} Btu/day (output) facility with a primary efficiency of 66.7% is 199,100 tpd. The TOSCO II plant at Parachute Creek, Colorado, is designed for raw shale feed of 66,000 tpd. This represents the size of a typical oil shale facility associated with an underground mine.

3.1 Processing Steps

The main processing steps involved with the shale oil module are as follows:

retorting,
gas recovery and treating,
sulfur recovery,
delayed coking,
hydrogen generation,
naphtha hydrotreating,
gas oil hydrotreating,
ammonia separation unit.

This processing sequence is shown in Figure 3-1. In addition to the major processing units, listed above, support facilities such as utility boilers and water treating facilities are also required.

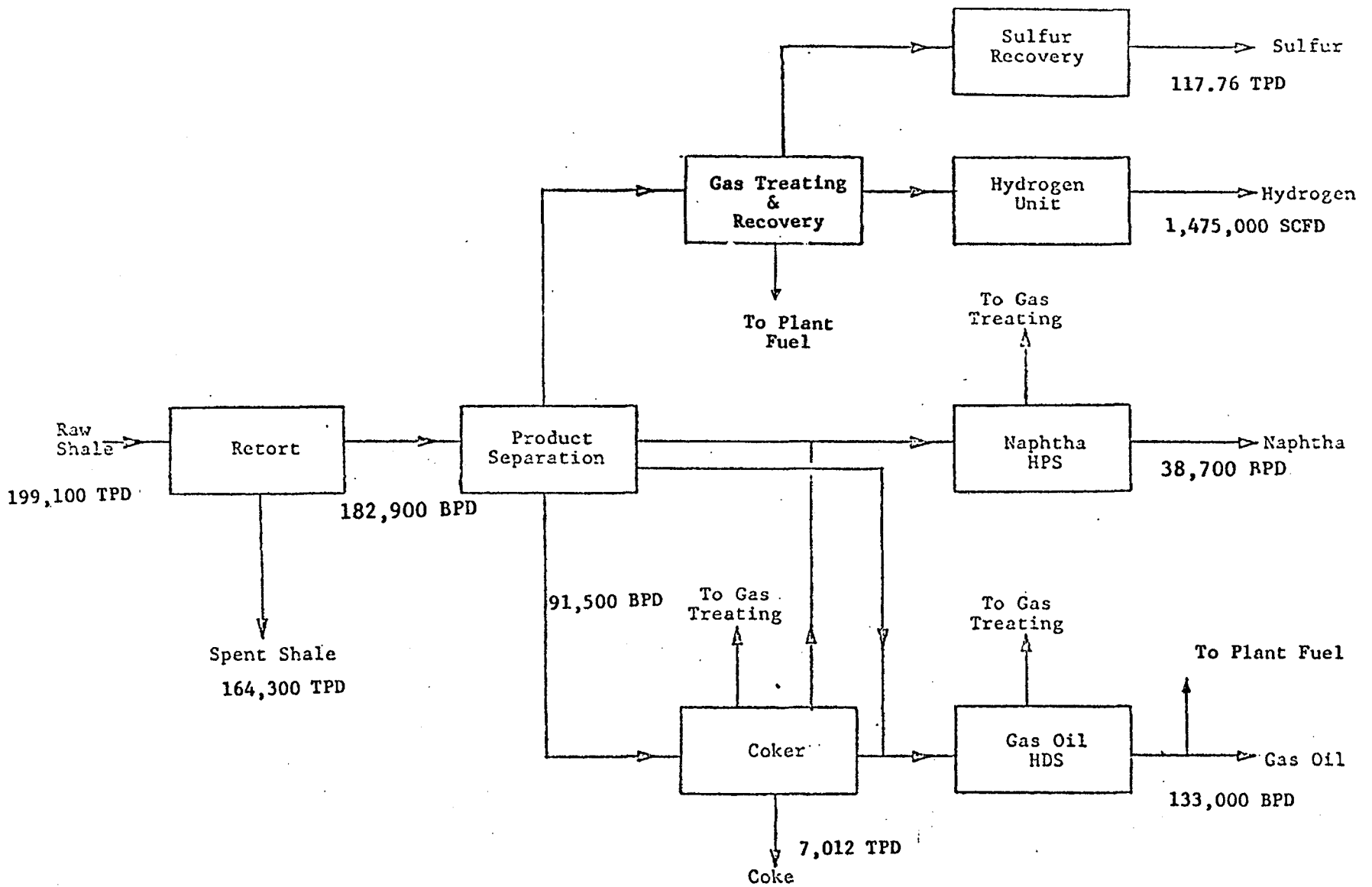

FIGURE 3-1 - SHALE OIL MODULE

3.2 Flow Rates

Module flow rates were calculated from data published by Hittman (HI-083) for the TOSCO II process. These rates are as follows:

Raw Shale to Retort	199,100 tpd
Crude Shale Oil to Distillation	182,900 bpd
Delayed Coker Feed	91,500 bpd
H_2 Plant Production	1,475,000 scfd
Hydrotreater Charge	166,400 bpd
Liquid Product	171,700 bpd

This module was assumed to separate product liquids into naphtha and distillate oil streams. This split was determined using heating values of 5.248×10^6 Btu/bbl for naphtha and 6.0×10^6 Btu/bbl for distillate fuel. These product stream flows were calculated to be 133,000 bpd distillate fuel and 38,700 bpd naphtha

3.3 Heat Requirements

Heat requirements for this module were based on Colony Development Operation data (CO-175). Heat requirements and fuel mix for the TOSCO II Parachute Creek plant are shown in Table 3-1. The module heat requirements and fuel mix were based on Mode 1 operation. Assumed heating values of the fuels are as follows:

Retort Gas	815 Btu/scf
C_4 Liquid	21,200 Btu/lb
Distillate Fuel	6×10^6 Btu/bbl

TABLE 3-1
PRELIMINARY FUEL BALANCE FOR COMMERCIAL SHALE OIL COMPLEX

MM BTU/HR

Source (2)	Mode I (3) Fuel Gas	Mode I (3) Fuel Oil	Mode I (3) C_4 Liquid	Mode II (4) Fuel Gas	Mode II (4) Fuel Oil	Mode II (4) C_4 Liquid
Pyrolysis and Oil Recovery Unit						
Preheat Systems (6)	708	755	384	330	945	307
Steam Superheaters (6)	---	---	144	---	---	120
Hydrogen Unit						
Reforming Furnaces (2)	632	---	---	632	---	---
Gas Oil Hydrogenation Unit						
Reactor Heaters (2)	---	---	47	---	55	---
Reboiler Heater	---	---	40	---	---	48
Naphtha Hydrogenation Unit						
Reactor Heater	10	---	---	11	---	---
Sulfur Recovery Unit						
Sulfur Plants (2) and Common Tail Gas Plant	10	---	---	10	---	---
Delayed Coker Unit						
Heater	88	---	---	96	---	---
Utilities						
Boilers (2)	---	93	---	---	150	---
TOTALS	1448	848	615	1079	1150	475

(1) It should be emphasized that while estimates of total fuel consumption are subject to only minor revisions, the allocation of fuels to various sources is quite preliminary, and is not only subject to substantial revision, but will be variable during plant operations.

(2) Where multiple sources are indicated, consumption is for all sources.

(3) Complex is expected to operate in "Mode I" approximately two-thirds of the time.

(4) Complex is expected to operate in "Mode II" approximately one-third of the time.

(Source: CO-175)

The values presented in Table 3-1 are adjusted to a 10^{12} Btu/day output basis. The heat requirements for the various module units. are shown in Table 3-2.

TABLE 3-2
MODULE HEAT REQUIREMENT
(Basis: 10^{12} Btu/Day Product)

Unit	Heat Requirement (MM Btu/hr)
Pyrolysis and Recovery	
Preheat System	5596.2
Steam Superheaters	436.2
Hydrogen Unit	1915.
Gas Oil Hydrogenation	
Reactor Heater	142.4
Reboiler Heater	121.2
Naphtha Hydrogenation	30.3
Delayed Coker	266.6
Utility Boilers	281.8
Sulfur Recovery	30.3

3.4 Module Efficiencies

These different efficiency terms are defined for each of the modules considered in this study. These three efficiencies are defined as follows:

(1) Primary Fuels Efficiency - Primary liquid fuels from the oil shale module are naphtha and distillate oil. The primary fuels efficiency is the heating value of these products divided by the heating value of the raw shale feed. This value is 66.7% for this module (HI-083).

(2) Total Products Efficiency - This efficiency credits any other hydrocarbon products made. Sulfur and ammonia are not included. Total products efficiency is the heating value of all hydrocarbon products divided by the heating value of the raw shale feed. Coke from the delayed coker is considered in this efficiency. For this module, the total products efficiency is 79.7%.

(3) Overall Efficiency - This efficiency takes into account any ancillary energy such as electricity that may be supplied to a module. This efficiency is equal to the heating value of all hydrocarbon products divided by the heating value of the raw shale feed plus any ancillary energy needs of the module. The overall efficiency for this module is 76.9%.

Determinations of these efficiencies are shown in Table 3-3.

TABLE 3-3

EFFICIENCY CALCULATIONS FOR OIL SHALE PROCESSING MODULE

Stream	Rate	Heating Value	Total Heating Value
Raw Shale	199,100 tpd	3765 Btu/lb	1.5×10^{12} Btu
Naphtha	38,700 bpd	5.248×10^{6} Btu/bbl	2.02×10^{11} Btu
Distillate Oil	133,000 bpd	6.0×10^{6} Btu/bbl	7.98×10^{11} Btu

$$\text{Primary Fuels Efficiency} = 10^{12}/1.5 \times 10^{12} = 0.667$$

Coke	7,012 tpd	14,000 Btu/lb	1.96×10^{11} Btu

$$\text{Total Product Efficiency} = \frac{1.196 \times 10^{12}}{1.5 \times 10^{12}} = 0.797$$

$$\text{Ancillary Energy} = 5.59 \times 10^{10} \text{ Btu}$$

$$\text{Overall Efficiency} = \frac{1.196 \times 10^{12}}{1.556 \times 10^{12}} = 0.769$$

3.5 Water Requirements

Water requirements for this module are based on TOSCO II estimates (CO-175). Estimated water requirements are shown in Figure 3-2. Water demands associated with the oil shale industry cannot be accurately defined due to the uncertainty of water requirements for revegetation. TOSCO II water demands range between 4970 gpm and 5600 gpm depending upon the amount of water allocated for revegetation. Water requirement for this module were calculated using the following TOSCO II demands as a basis:

Make-Up to Water Treatment	3055 gpm
Make-Up to Pyrolysis Unit	820 gpm
Dust Control for Processed Shale	250 gpm
Water for Revegetation	700 gpm
	4825 gpm

A module water requirement of 21.1 x 10^6 gal/day was determined.

As a result of a lack of data on revegetation, considerable discrepancies exist in published estimates of oil shale industry water demands. Selected estimates of water requirements for a million barrel per day oil shale industry are as follows:

Cameron and Jones in 1959, 130,000 acre-ft/yr
Denver Research Institute in 1954, 145,000 acre-ft/yr
Dept. of the Interior in 1973, 155,000 acre-ft/yr
Colony Development Operation in 1974, 175,000 acre-ft/yr

In view of these increasing figures, an estimate of 200,000-250,000 acre-feet of water per year is probably reasonable for a million barrel per day oil shale industry (GA-107).

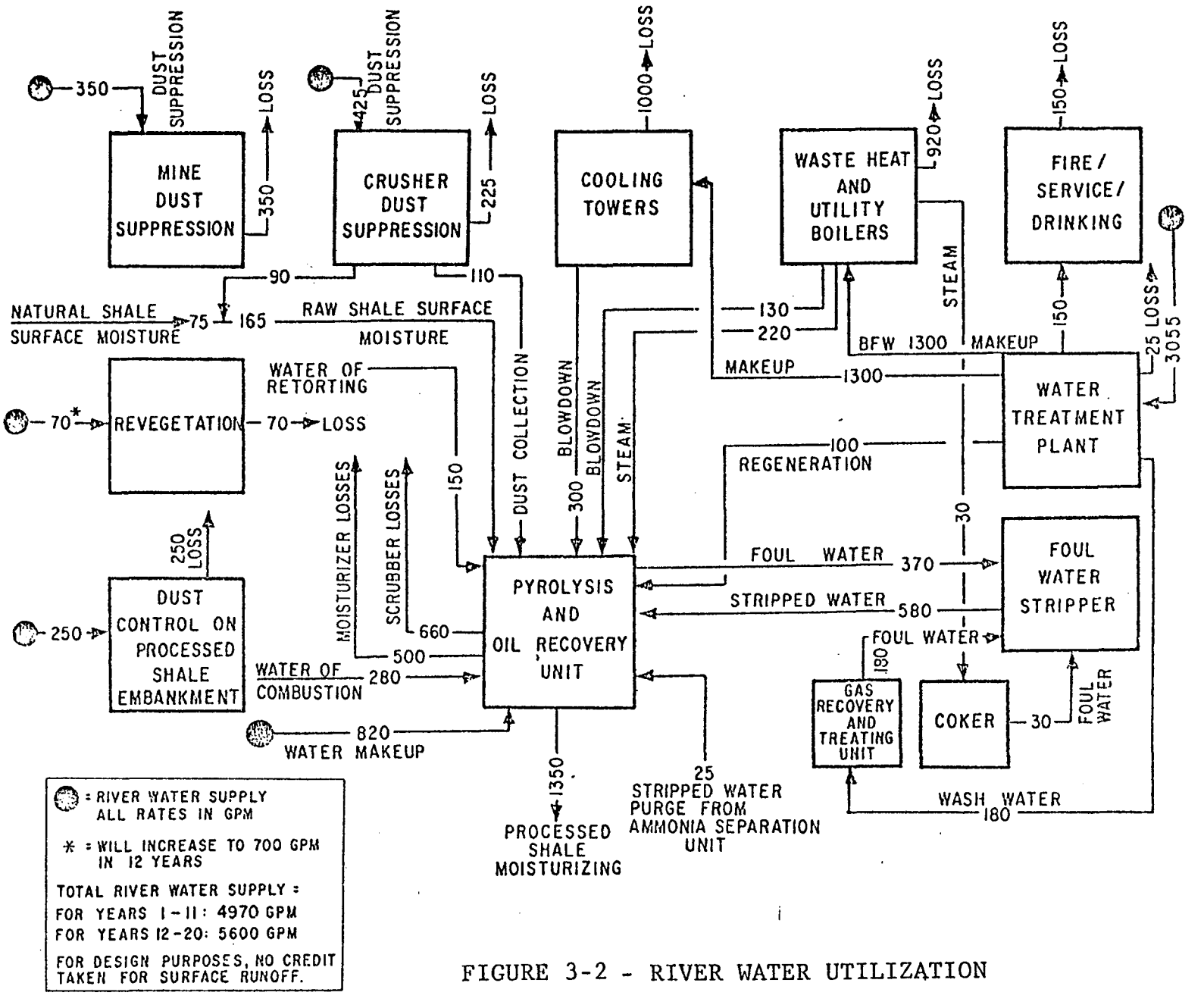

FIGURE 3-2 - RIVER WATER UTILIZATION

(Source: CO-175)

3.6 Land Use

Land requirements for this module were determined from information in the Enviornmental Statement for the Prototype Oil Shale Leasing Program (US-093). A land impact of 320 acres is given for a shale oil facility producing 50,000 bpd. This land requirement is for retorting, upgrading, and off-site facilities. The land impact from the TOSCO II Parachute Creek plant for these facilities is given as 315 acres. This figure does not include land required for mining, transportation, and spent shale disposal.

An equivalent land impact of 320 acres due to land requirements for expansion, water containment (evaporation ponds), and a green belt is assumed. A basis of 640 acres for a 50,000 bpd facility is obtained. Land requirements for the 10^{12} Btu/day module are estimated to be 2000 acres.

3.7 Occupational Health

Occupational health information was obtained from the Hittman Study (HI-083). The statistics are based on retorting and power generation data. The occupational health data for a TOSCO II plant processing 10^{12} Btu/yr are as follows:

deaths	1.38×10^{-3}
injuries	1.45×10^{-1}
man-days	1.41×10^{-1}

Since oil shale processing is a relatively new technology, better occupational health statistics will be established as operating time accumulates. The data from the Hittman Study were extrapolated to a 10^{12} Btu/day output basis for this module.

4.0 MODULE EMISSIONS

4.1 Air Emissions

Module air emissions result from fuels combustion, shale moisturizing, sulfur recovery, storage, and miscellaneous hydrocarbon emissions. A summary of module air emissions is presented in Table 4-1.

4.1.1 Fuel Combustion

Fuel combustion emission sources were defined as follows (CO-175):

Pyrolysis or Retorting Unit
Hydrogen Unit
Gas Oil Hydrotreating
Naphtha Hydrotreating
Delayed Coker
Utility Boilers

The type of fuel combusted at the individual source was determined from the TOSCO II fuel mix (CO-175). The fuels combusted in this module are retort gas, C_4 liquid and distillate fuel. It was assumed that particulate emissions from the pyrolysis unit are controlled to 0.03 gr/scf of flue gas (HI-083).

The remaining emissions from the pyrolysis unit and emissions from the other fuel combustion sources were calculated using EPA fuel combustion emission factors for the appropriate fuel (EN-071). Fuels used at the specific units are shown in Table 3-1 (Mode 1). EPA combustion factors are presented in Table 4-2. Note that residual oil factors are used for

TABLE 4-1

SHALE OIL MODULE -10^{12} BTU OUTPUT/DAY AIR EMISSIONS AND STACK PARAMETERS

Source	Heat Input mm Btu/Hr	Fuel	Emissions lbs/Hr					Stack Parameters					
			Particulates	SO_2	Total Organics	CO	NO_x	Mass Flow lbs/Hr	ACFM	Velocity FPS	Height Ft.	Temperature °F	Diameter Ft.
1. Pyrolysis & Oil Recovery Unit													
A. Preheat System (6 units)	932.7		42.0	477.7	12.3	19.8	214.3	731.7×10^3	198.3×10^3	60	200	130	8.11
B. Steam Superheaters (6 units)	72.7	3.43×10^3 lb/Hr	3.5		0.22	1.20	9.04	61.9×10^3	16.1×10^3	60	200	150	2.38
C. Shale Moisturizing (6 units)			15.3					169.7×10^3	63.6×10^3	60	200	195	4.59
TOTAL	6032.4		364.8	2866	75.1	125.8	1340	5.78×10^6					
2. Hydrogen Unit (4 furnaces)	478.7	587×10^3 SCFH	8.36	471.5	1.39	7.90	111.5	262.5×10^3	113.9×10^3	60	200	500	6.35
TOTAL	1915	2.35×10^6 SCFH	33.45	1886	5.58	31.6	446	1.05×10^6					

TABLE 4-1 Continued

SHALE OIL MODULE -10^{12} BTU OUTPUT/DAY AIR EMISSIONS AND STACK PARAMETERS

Source	Heat Input mm Btu/Hr	Fuel	Emissions lbs/Hr					Stack Parameters					
			Particulates	SO_2	Total Organics	CO	NO_x	Mass Flow lbs/Hr	ACFM	Velocity FPS	Height Ft.	Temperature °F	Diameter Ft.
3. Gas Oil Hydro-genation													
A. Reactor Heater	142.4	6.72x10^3lb/Hr	2.63		0.44	2.34	17.7	121.3x10^3	67.4x10^3	60	200	850	4.88
B. Reboiler Heater	121.2	5.72x10^3lb/Hr	2.24		0.37	1.99	15.07	103.2x10^3	57.4x10^3	60	200	850	4.51
TOTAL	263.6	12.43x10^3lb/Hr	4.87		0.81	4.33	32.77	224.5x10^3					
4. Naphtha Hydro-genation	30.3	37.2x10^3SCFH	0.53	29.8	0.09	0.50	7.06	16.7x10^3	9.8x10^3	60	200	850	1.86
5. Delayed Coker	266.6	327.1x10^3 SCFH	4.66	253.8	0.78	4.40	62.1	146.8x10^3	63.4x10^3	60	200	500	4.74
6. Utility Boilers (2 units)	140.9	985 gal/Hr	22.65	46.35	3.94	3.94	39.4	136.8x10^3	55.2x10^3	60	200	500	4.42
TOTAL	281.8	1970 gal/Hr	45.3	92.7	7.88	7.88	78.8	273.5x10^3					
7. Sulfur Recovery	30.3	37.2x10^3SCFH		195.8				471.3x10^3	97.3x10^3	60	200	100	5.65
8. Refining Misc.					2475						5		

TABLE 4-1 Continued

SHALE OIL MODULE -10^{12} BTU OUTPUT/DAY AIR EMISSIONS AND STACK PARAMETERS

Source	Heat Input mm Btu/Hr	Fuel	Emissions lbs/Hr						Stack Parameters					
			Particulates	SO_2	Total Organics	CO	NO_x	NH_3	Mass Flow lbs/Hr	ACFM	Velocity FPS	Height Ft.	Temperature °F	Diameter Ft.
9. Storage					87.1			31.1				50		
TOTAL			453.6	53241	2652.3	174.5	19667	31.1						

TABLE 4-2

FUEL COMBUSTION EMISSION FACTORS

	Natural Gas $lb/10^6\ ft^3$	Cy Liquid $lb/10^3$ gal	Residual Oil $lb/10^3$ gal
Particulates	18.0	1.8	23.0
SO_2	0.6	0.095	157 x S*
HC	3.	0.3	3.
CO	17.	1.6	4.
NO_x	230.	12.1	40.
Aldehydes	--	--	1.

* S = wt. % sulfur in fuel oil.

Source: (EN-071)

fuel oil combustion. All factors used were for fuel combustion in process boilers. Fuel gas emissions were adjusted by a factor of 0.791 (ratio of heating value 815/1050) to compensate for the different composition of retort gas relative to natural gas. Sulfur dioxide emissions were determined by considering the following:

(1) approximately 0.5 vol % H_2S in retort gas,

(2) essentially zero H_2S in C_4 liquid after amine treating, and

(3) fuel oil containing 0.3 wt. % S.

Aldehyde emissions from fuel oil combustion were combined with hydrocarbons to give total organic emissions.

Flue gas rates resulting from fuel combustion were calculated assuming stoichiometric combustion and 20% excess oxygen. Combustion of one scf of fuel gas results in 6.3 scf of flue gas. Combustion of one pound of C_4 liquid results in 239.3 scf of flue gas. One gallon of fuel oil yields 1820 scf of flue gas. Stack temperatures were taken from the estimated stack temperatures for the TOSCO II plant (CO-175). A stack velocity of 60 fps was assumed for dispersion modeling.

4.1.2 Shale Moisturizing

The only emissions from the spent shale moisturizing operation should be particulates. Particulates were assumed to be controlled to 0.03 gr/scf of flue gas. The flue gas rate was determined from shale moisturizing rates and operating data in the TOSCO II environmental impact analysis (CO-175).

4.1.3 Sulfur Recovery

Sulfur dioxide was considered to be the only emission from the sulfur recovery facilities. Module sulfur recovery facilities were assumed to consist of a Claus plant and a tail gas treating unit. A module sulfur balance was used to determine the equivalent sulfur in the charge. The sulfur recovery unit was assumed to recover 99% of the equivalent sulfur in the charge (HI-083).

4.1.4 Ammonia Storage

EPA emission factors (EN-071) for the storage and loading of ammonia (200 lb/ton NH_3) were used to determine ammonia emissions. This factor was reduced by 99% considering the use of a packed tower scrubber. Ammonia production rates were calculated from estimated ammonia yields for a typical shale oil plant (US-093).

4.1.5 Petroleum Storage

Based on literature data and experience, the following assumptions were formulated to calculate the hydrocarbon emissions from petroleum storage.

- All product storage is in floating roof tanks.
- Storage capacity is 10 days (HI-083).
- Combined hydrocarbon products are equivalent to crude oil.

Using petroleum storage emission factors for storing crude oil in floating roof tanks (0.029 lb/day - 10^3 gal), hydrocarbon emissions from storage were calculated to be 87.1 lb/hr. These emissions were assumed to occur at a height of fifty feet.

4.1.6 Miscellaneous Hydrocarbons

There can be numerous miscellaneous hydrocarbon emissions in the shale oil upgrading facilities which escape from sources such as valve stems, flanges, loading racks, equipment leaks, pump seals, sumps, and API separators. These losses are discussed in Radian's Refinery Siting Report (RA-119). Based on literature data, Radian found that miscellaneous hydrocarbon emissions can amount to about 0.1 wt. % of refinery capacity for a new well-designed, well-maintained refinery. This value of 0.1 wt. % was used to determine miscellaneous emissions from the shale oil upgrading facilities. Upgrading capacity was considered to be the equivalent crude distillation tower feed rate (182,900 bpd). Crude shale oil from the TOSCO II retort is approximately 21° API (US-093). The composition of these fugitive hydrocarbon emissions can be expected to be a composite of all volatile intermediate and refined products handled by the module. The emissions were assumed to occur at a height of five feet.

4.2 Water Effluents

Water effluents were assumed to be nonexistent since the module is assumed to operate with zero discharge (HI-083).

4.3 Thermal

Thermal discharges to water bodies were determined to be zero since no water was assumed to be discharged from the module.

4.4 Solid Wastes

Solid wastes were determined from the amount of spent shale generated by a typical shale oil process (US-093). A value of 60,000 tpd spent shale for a 72,700 tpd raw shale process was extrapolated to 164,300 tpd spent shale for this 10^{12} Btu/day output module. Most of this waste would normally be returned to the mine site for disposal.

APPENDIX C

III-G. LIQUEFACTION SYN-CRUDE REFINERY

1.0 INTRODUCTION

A refinery built for the specific purpose of upgrading a synthetic crude will differ from a typical petroleum refinery processing a full range domestic crude if the properties of the synthetic and natural crudes are different. Most schemes for the production of a synthetic crude from coal call for on-site upgrading. This on-site upgrading normally consists of stabilization by removal of light ends and desulfurization of the liquid product. As a result, the liquid fuel charged to a liquefaction syn-crude refinery will not require exactly the same processing as a refinery receiving a full range domestic crude. These differences are discussed in Section 3.0.

2.0 MODULE BASIS

This module is based on a typical refinery size of 100,000 BPD* of crude capacity. However, the emission values for this module are also expressed on the basis of 10^{12} Btu/day output of major liquid fuels to facilitate comparisons with other energy conversion modules. Major liquid fuels include gasoline, distillate fuel oil, and residual oil. Estimated liquefaction refinery module emissions for a module producing 10^{12} Btu/day of liquid fuels are shown in Table 2-1.

* All flow rates in this module are based on calendar days.

TABLE 2-1

SUMMARY OF ENVIRONMENTAL IMPACTS

LIQUEFACTION SYN-CRUDE REFINERY MODULE

BASIS: 10^{12} Btu OUTPUT LIQUID FUEL

Air (lb/hr)	
Particulates	465
SO_2	1378.7
NO_x	1710
CO	129
HC	4133
Water (lb/hr)	
Suspended Solids	297
Dissolved Solids	10,996
Organic Material	62.5
Thermal (Btu/hr)	0.
Solid Wastes (tons/day)	3.7
Land Use (acres)	5178
Water Requirements (gal/day)	16.3×10^6
Occupational Health (per year)	
Deaths	0.475
Injuries	35.0
Man-days Lost	8363
Efficiency (%)	
Primary Fuels Efficiency	81.5
Total Products Efficiency	89.5
Overall Efficiency	87.1
Ancillary Energy (Btu/day)	3.51×10^{10}

3.0 MODULE DESCRIPTION

Properties of the major liquid products from coal liquefaction processes are shown in Table 3-1 (KA-124). A liquefaction syn-crude of approximately 10^0 API, containing 0.5 wt. % S, was assumed to be used as charge to the liquefaction refinery. Extensive cracking would be required to upgrade this feed to produce gasoline and distillate fuels. For this reason a heavy oil hydrocracker was utilized in place of a crude distillation unit. The liquefaction refinery module produces 0.51 bbl gasoline, 0.35 bbl distillate fuel and 0.03 bbl residual fuel per bbl of syn-crude charged.

3.1 Processing Steps

The processes necessary for the module to produce gasoline and distillate fuel were estimated from the charge quality. Processes included in the liquefaction refinery module are as follows:

heavy oil hydrocracker
flexicoker
gas treating facilities
sulfur recovery facilities
isomerization unit
catalytic reformer
fluid catalytic cracker
light end recovery
ethylene plant
alkylation unit
hydrogen plant
gasoline blending facilities

TABLE 3-1

COAL LIQUEFACTION PROCESS OPERATING CONDITIONS AND TYPICAL PRODUCTS (KA-124)

PROCESS	H-COAL	PARSONS MODIFIED PAMCO	PAMCO (S.SERV.)	BUR. OF MINES	GULF CCL	GULF CCL	CONSOL
Hydrogen used in dissolution?	Yes	Yes	Yes	Yes	Yes	Yes	No
Subsequent Extract Hydrogenation?	No	Yes	No	No	No	No	Yes
Catalytic Dissol.	Yes	No	No	Yes	Yes	Yes	No
Approximate Reactor Temperature.	850°	840°F	850°F	840°F	800°F	800°F	730°F
Reactor Pressure.	3000 psig	1200 psig	1500 psig	4000 psig	3000 psig	3000 psig	400 psig
Coal	Ill. No.6	Ill. No.6	--	Kentucky	Big Horn Subbit.	Pittsburg Seam (Bit.)	Pittsburg Seam Coal
Sulfur, Wt.%	5%	3.38%	5%	4.6%	0.54%	1.49%	3.67%
Solvent to Coal Ratio (to slurry).	1:1(by Wt.)	2.0:1(by Wt.)	2:1(by Wt.)	1.22:1.0(by Wt.)	2.33:1.0(by Wt.)	2.33:1.0(by Wt.)	2:1 (by Wt.)
Percent Coal Dissolved (MAF).	90%+	90%+	90%+	90%+	91%	90%	63%
Hydrogen Consumption Scf/ton Coal (MAF).	15,300	12,600	@2% by Wt. 7600	9000	22,800	17,500	16,300
Solids Separation, Solids Content in Product.	Hydroclones and/or filtration	Filtration	Filtration 0.23 Wt.%	Centrifuge 1.3 Wt.%	Hydroclones & Filt. 0.02 Wt.%	Hydroclones & Filt. 0.03 Wt. %	Hydroclones
Principal Products							
1. Fuel	Fuel Oil	Residual Fuel Oil	Solvent Refined Coal	Fuel Oil	Filtrate Fuel Oil	Filtrate Fuel Oil	Fuel Oil
Yield bbl/ton	1.73 bbl/ton	1.43bbl/ton	1116 lb/ton*	3 bbl/MAF ton*	2.3 bbl/ton	3.6 bbl/ton*	1.52 bbl/ton coal
API gravity	-3.1°API	-9.7°API 60/60		Sp Gr=1.12-1.14	9.0°API	1.2° API	10.3°API
Viscosity				Visc = 75-204 SSF@ 180°F	7.1 CS @100°F	4.3 CS @210°F	
Sulfur, Wt.%	0.5%	<0.5%	<1.2%	0.31%	0.04%	0.11	.128%
Nitrogen, Wt.%				0.9%	0.40%		
2. Fuel	Naphtha	Distillate Fuel Oil			Light Ends	Light Ends	Naphtha
API gravity	38.4°API	13.9°API 60/60			35.3°API	0.45 bbl/ton*	58.0°API
Yield bbl/ton	0.54bbl/ton	0.71 bbl/ton			0.9 bbl/ton*		0.52 bbl/ton
Viscosity					1.2 CS @100°F		
Sulfur, Wt.%	<0.1%	0.2%			0.04%		.056%
Nitrogen, Wt.%					0.19%		

*Exclusive of H_2 Production

The assumed module processing sequence is shown in Figure 3-1. Hydrocracking and flexicoking units are utilized in this refinery to crack the heavy oil fractions into lighter boiling gasoline and distillate fuel components.

3.2 Flow Rates

Flow rates were determined from specific process data (HY-013) and syn-crude quality. Since the syn-crude quality was estimated to be similar to a heavy residual oil, the feed is initially routed to a heavy oil hydrocracker. Desulfurization and cracking of the feedstock are accomplished with this unit. Hydrocracker product distribution and utility requirements were based on H-Oil hydrocracking process data (HY-013). Assuming the yield to be essentially the same as that shown for West Texas Vacuum Resid (12.7° API), the product streams from this unit were estimated to be as follows:

Light ends	797,000 lb/day
Naphtha	20,100 BPD
Distillate Fuel	25,500 BPD
Gas Oil	35,200 BPD
Heavy Resid	20,000 BPD

Hydrogen requirements for this process are 1250 SCF/bbl charge.

The heavy resid from this unit is routed to a flexicoker. The product stream and utility requirements for flexicoking were estimated from literature information (HY-013). Product streams include fuel gas, naphtha, distillate fuel, residual fuel, and coke. The coke yield from the unit was estimated to be 2.8 wt. % of the feed or 279 x 10^3 lb/day. The residual fuel stream which is routed to tankage is 8615 BPD.

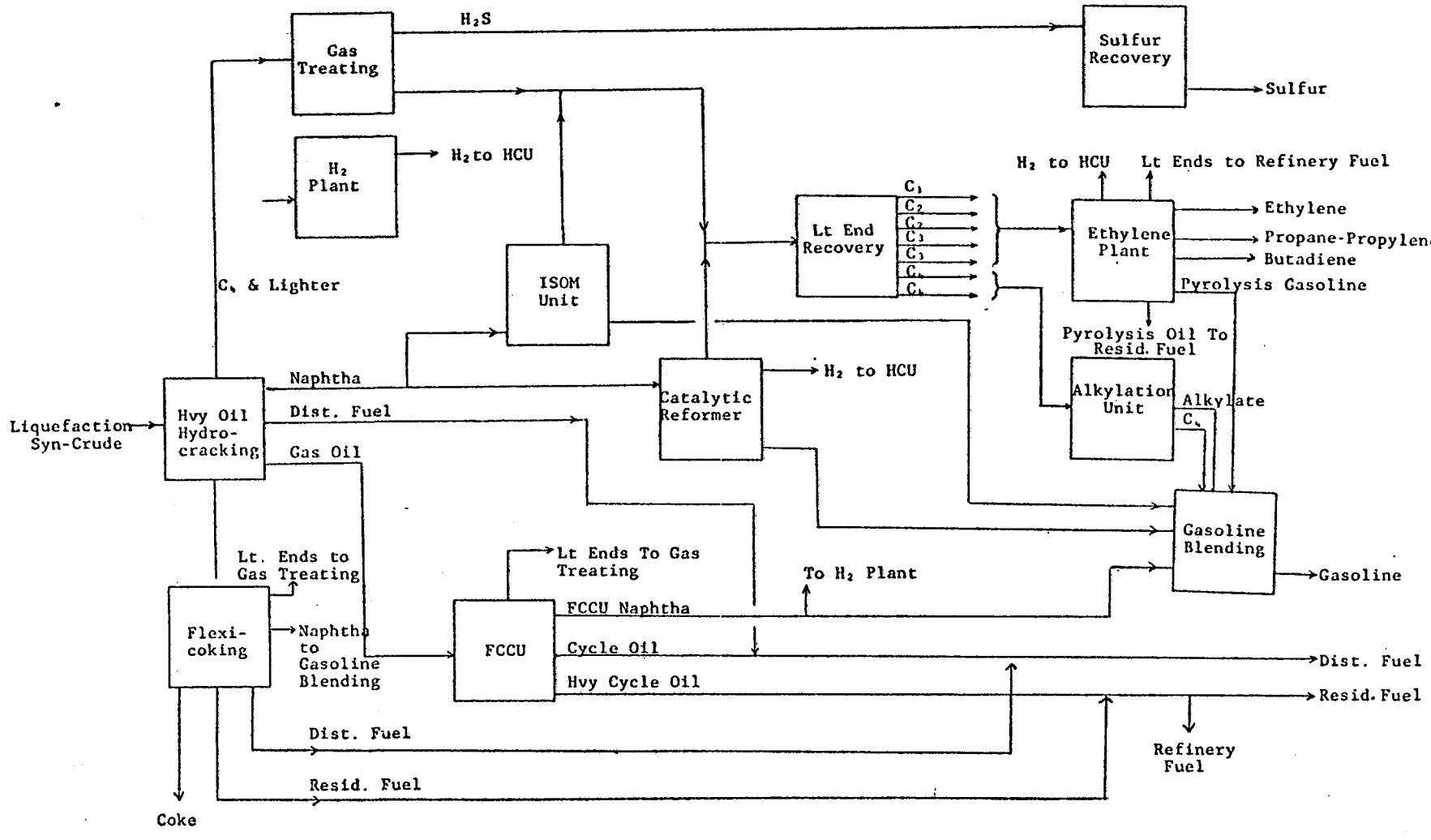

LIQUEFACTION SYN-CRUDE REFINERY MODULE

FIGURE 3-1

Distillate fuel make is 4000 BPD. The distillate fuel stream also goes to product tankage. The naphtha stream from the flexicoker is routed to gasoline blending. The naphtha yield is estimated as 9050 BPD. The gas stream from this unit (809 x 10^3 lb/day) is routed to gas treating.

The gas oil stream from the hydrocracker is routed to a fluid catalytic cracker. Product yields and utility requirements for that unit were based on the Gulf Development Corporation's Riser Cracking Process (HY-013). Product streams from the catalytic cracker include light ends, naphtha, distillate fuel and residual fuel. The heavy cycle oil (residual fuel) from this unit is approximately 6.5 vol. % of the feed. This stream (2,288 BPD) is routed to product tankage. The distillate fuel yield is approximately 15.5 vol. % of the charge or 5,456 BPD. This stream is combined with the straight run distillate from the hydrocracker and routed to tankage. The naphtha yield is 58.5 vol. % of the feed or 20,592 BPD. This product stream is routed to the gasoline blending facilities. Light ends yield is approximately 2.57 x 10^6 lbs/day. Composition of the light end stream was determined by riser cracking yield data (HY-013).

A CO boiler is included in the refinery module to combust the carbon monoxide in the flue gas from the cat cracker regenerator. The CO boiler serves the purpose of reducing the carbon monoxide emissions while recovering heat in the form of flue gas sensible heat and carbon monoxide heat of combustion. Fuel oil added to sustain combustion is considered to be 10% of the energy supplied by CO combustion (RA-119). Using data on 1) the composition of regenerator flue gases (HA-157), 2) the specific heats, and 3) the heats of combustion of those gases (PE-030), heat from the CO boiler was determined to be as follows:

Sensible Heat	122.5 MM Btu/hr
CO Combustion	131.9 MM Btu/hr
Fuel Combustion	13.2 MM Btu/hr

The total heat recovered by the CO boiler, 267.6 MM Btu/hr, is sufficient to meet module steam demands. Therefore, a separate boiler for steam generation which might be needed for startup, turnaround and emergency standby would not normally be in operation.

Distillate fuel from the hydrocracker (25,500 BPD) is routed to product tankage. The distillate and gas oil streams from the hydrocracker are assumed to contain 0.3 wt.% S. The remainder of the sulfur that is in the charge is assumed to go overhead from the hydrocracker with the light ends.

Due to the hydrogen sulfide formed in the hydrocracking process the light ends from this unit are routed to gas treating facilities along with gas from the catalytic cracker and flexicoker. An amine unit is used to remove the hydrogen sulfide from the gas stream. The sweetened gas stream is routed to the light end recovery facilities. The hydrogen sulfide rich stream goes to a Claus plant for sulfur recovery.

The module Claus plant utilizes three reactors in conjunction with a tail gas treating unit and is capable of approximately 99.9% sulfur recovery (RA-119). Equivalent sulfur in the charge to the Claus plant was determined by a plant sulfur balance. Distillate fuel and heavier fractions from the hydrocracker were assumed to contain 0.3 wt. % S. The remaining sulfur was assumed to be associated with the light ends from the hydrocracker and to be routed to the amine unit where 100% removal of the sulfur compounds is estimated. Sulfur production from the sulfur recovery facilities is 50.4 LTPD (2240 lbs per long ton).

Naphtha from the hydrocracker is routed to either an isomerization unit or a catalytic reformer. The isomerization unit of the module receives 30 vol.% of the hydrocracker naphtha, 6030 BPD. Process yields and utility requirements were obtained from the British Petroleum Trading Limited Isomerization Unit data (HY-013). The isomerate yield is 100 vol.% The isomerate stream is routed to gasoline blending. Light ends produced from the isom unit are approximately 1.1 wt.% of the isom unit charge. The hydrogen requirements for this unit are assumed to be negligible.

The catalytic reformer receives 70 vol.% of the hydrocracker naphtha (14,070 BPD). The module reformer is based on data from the Rheniforming and Ultraforming Processes (HY-013). The higher yields for a hydrocrackate charge are used. Products from the reformer include hydrogen, light ends, and reformate. The reformate produced is approximately 84.1 vol.% of the naphtha feed or 11,833 BPD. This product stream is routed to the gasoline blending facilities. Light end yield is approximately 200 SCF/bbl feed. Light ends from the reformer are routed to the light end recovery unit. The composition of the light end stream was taken from data given on the Engelhard Mineral and Chemicals Corp. Reformer (HY-006). Hydrogen production from this unit is 1330 SCF/bbl feed for a total of 18.7 x 10^6 SCFD.

Module hydrogen requirements are determined from the hydrocracker requirements (125 x 10^6 SCFD). A portion of this hydrogen is produced at the CRU (18.7 x 10^6 SCFD) and at the ethylene plant (4.87 x 10^6 SCFD). The bulk of the hydrogen (101.4 x 10^6 SCFD) must be supplied from a hydrogen generation plant. This module assumes the use of steam-naphtha reforming for hydrogen production. The naphtha requirement for this unit is 12.98 lb/10^3 SCF H_2 or 4874 BPD (VO-025). The naphtha is supplied from the catalytic cracker.

The light end recovery unit receives gases from the gas treating facilities, isom unit, catalytic reformer, and catalytic cracker. Total light end charge is approximately 4.54×10^6 lb/day. Composition is determined by mass balance and specific unit yield data. Since this module includes an ethylene plant to upgrade the low molecular weight paraffins, the light end recovery separates the propane and lighter components from the process gas stream to supply feed to the ethylene plant. The butane and butene rich stream is routed to an alkylation unit.

The ethylene plant receives approximately 2.4×10^6 lb/day charge including 112,800 lb/day ethylene; 347,129 lb/day ethane; and 484,217 lb/day propane. Yields are based on information taken from the Radian Refinery Siting Study (RA-119). Products from the ethylene plant include ethylene, propylene, butadiene, gasoline, and fuel oil. The methane rich stream from the ethylene plant is used for refinery fuel gas.

The alkylation unit receives 1,365,000 lb/day C_4 and 739,000 lb/day $C_4^=$. Assuming complete conversion of the limiting reactant (butene), alkylate production is 6129 BPD. This stream is routed to gasoline blending. Excess butane, approximately 600,000 lb/day, also goes to the gasoline blending facilities.

The gasoline blending facilities receive gasoline components from the ethylene plant, alkylation unit, isom unit, catalytic reformer, flexicoker and catalytic cracker. Total gasoline make is 51,995 BPD.

3.3 Heat Requirements

Overall module heat requirements were determined from individual process unit utility requirements and flow rates. Heat requirements for the various process units are presented in Table 3-2. The total module heat requirement is 44.5×10^3

TABLE 3-2

MODULE HEAT REQUIREMENT

(RA-119, HY-013)

Unit	Heat Requirement Per bbl Charge (MBTU/bbl)	Flow Rate (BPD)	Unit Heat Requirement (BTU/day)
Hydrocracker	112	100,000	11.2×10^9
Isomerization	68.4	6,030	0.412×10^9
Catalytic Reformer	265	14,070	3.73×10^9
Fluid Catalytic Cracker	153.7	35,200	5.41×10^9
Alkylation (1)	240	6,129 BPD alkylate	1.47×10^9
Ethylene Plant (2)	8760	623.1×10^3 lb/day C_2 =	5.46×10^9
H_2 Plant (3)	165.4	101.4×10^6 SCF	16.8×10^9
			44.5×10^9

(1) Alkylation heat requirement based on alkylate production.

(2) Ethylene plant heat requirement based on ethylene production.

(3) Hydrogen plant heat requirement based on 10^3 SCF hydrogen production.

Btu/day. This heat requirement is supplied partially by refinery gas with a heating value of 1050 Btu/SCF. The refinery gas should be capable of supplying approximately 16.7% of the heat requirement or 7.05×10^9 Btu/day. The difference is supplied by residual fuel oil. The fuel oil heating value is assumed to be 6.3×10^6 Btu/bbl (EN-071). In order to determine emissions at specific sources, fuel gas is considered to be used at the ethylene plant and alkylation unit. Fuel oil is utilized at the other processing units.

Ancillary energy required by the module as electricity is estimated as 3% of the total heat requirement or 1.38×10^9 Btu/day (BA-230). This value is compared to the available process utility information (HY-013) and the higher value used as the energy requirement of the refinery. Since process utility information indicates an electrical requirement of 1.66×10^6Kw-Hr/day or 5.67×10^9 Btu/day, this value is used for the ancillary energy requirement. Considering the energy required to produce electricity, a conversion of 10,000 Btu per Kw-Hr is used to determine a total ancillary energy of 16.6×10^9 Btu/day. Ancillary energy requirement for a module producing 10^{12} Btu/day of primary liquid fuels is 35.1×10^9 Btu/day.

3.4 Module Efficiencies

Three different efficiency terms are defined for each of the modules considered in this study. These three efficiencies are defined as follows:

(1) Primary fuels efficiency:

Primary liquid fuels from the liquefaction refinery module are naphtha, distillate oil, and residual oil. The primary fuels efficiency is the heating value of these three products divided by the heating value of the crude feed. This value is 81.5% for this module.

(2) Total products efficiency:

This efficiency credits any other hydrocarbon products made. Sulfur is not included. Total products efficiency is the heating value of all hydrocarbon products divided by the heating value of the feed. This efficiency accounts for the by-products such as ethylene, propylene, and butadiene in this module. The total products efficiency of the liquefaction refinery module is 89.5%.

(3) Overall Efficiency:

This efficiency takes into account any ancillary energy such as electricity that may be supplied to a module. This efficiency is equal to the heating value of all hydrocarbon products divided by the heating value of the feed plus any ancillary energy supplied to the module. The overall efficiency of this module is 87.1%.

Determination of the efficiencies for the liquefaction refinery are shown in Table 3-3.

3.5 Water Requirements

The make-up water requirement for the module was estimated from the module heat requirement and the wastewater effluent, assuming that heat (evaporation) and wastewater represent the only significant losses of water from the system. The heat requirement of 44.5×10^9 Btu/day was estimated to result in 5.33×10^6 gal/day of water evaporated from the module (1000 Btu/lb H_2O) or approximately 1.27 bbl

TABLE 3-3

LIQUEFACTION REFINERY MODULE EFFICIENCY

Module Stream	Heating Value	Amount	Total Heat
Syn-Crude	6.1×10^6 Btu/BBL	100,000 BPD	6.1×10^{11} Btu
Gasoline	5.248×10^6 Btu/BBL	51,995 BPD	2.73×10^{11} Btu
Distillate Fuel	5.88×10^6 Btu/BBL	34,956 BPD	2.05×10^{11} Btu
Residual Fuel	6.3×10^6 Btu/BBL	2,957 BPD	0.19×10^{11} Btu

Primary Efficiency = 4.97/6.1 = 81.5%

Ethylene	21,625 Btu/lb	623,155 lb/Day	0.13×10^{11} Btu
Propane-Propylene	21,339 Btu/lb	1,412,892 lb/Day	0.32×10^{11} Btu
Butadiene	20,217 Btu/lb	24,456 lb/Day	0.004×10^{11} Btu
Coke	14,000 Btu/lb	279×10^3 lb/Day	0.04×10^{11} Btu

Total Products Efficiency = 5.46/6.1 = 89.5%

Ancillary Energy = 16.6×10^9 Btu/Day

Overall Efficiency = 5.46/6.27 = 87.1%

water/bbl crude. Wastewater effluent is set at 15 gal/bbl crude (RA-119). From these two rates, a make-up water requirement of 1.63 bb/bbl crude or 6.85 x 10^6 gal/day is defined. The water requirement for a refinery producing 10^{12} Btu/day of primary liquid fuels is 16.3 x 10^6 gal/day.

3.6 Land Requirements

The land requirement for a grass roots refinery is estimated to be 218 acre/10,000 BPD crude capacity (NE-046). The land requirement for this module is 2180 acres or 3.4 square miles. The Radian Refinery Siting Study estimated that 1/4 of the land is used for process units and 2/3 for the tank farm with the remainder being unused boundary.

3.7 Occupational Health

Occupational health data were based on published data for a refinery supplying fuel to a 1000 Mw power plant (BA-230). Values for deaths, injuries, and man-days lost are presented on a 10^6 Btu output basis in the Battelle study. These values were adjusted to a 10^{12} Btu/day output basis for presentation in Table 2-1.

4.0 ENVIRONMENTAL EFFECTS

4.1 Air Emissions

Air emissions from the module result from fuels combustion (process heaters), the CO boiler, sludge incineration, sulfur recovery, petroleum storage and miscellaneous fugitive sources. Module air emissions and stack parameters are shown in Table 4-1.

4.1.1 Fuel Combustion Emissions

Fuel combustion emission sources were determined to be the following:

Heavy oil hydrocracking
Isomerization Unit
Catalytic Reformer
Catalytic Cracker
Hydrogen Plant
Ethylene Plant
Alkylation Unit

Emissions from these sources were calculated by using appropriate EPA fuel combustion factors (EN-071).

The factors for combustion of fuel gas and fuel oil in process boilers are shown in Table 4-2. Sulfur dioxide emissions from fuel gas were determined by assuming compliance with the federal regulation of 0.10 gr H_2S/dscf fuel gas (ST-124). Sulfur dioxide emissions from distillate fuel combustion sources were determined by assuming a 0.3 wt. % S content. Aldehyde emissions from fuel oil combustion were combined with hydrocarbons

TABLE 4-1

100,000 BPD REFINERY MODULE - LIQUEFACTION SYN-CRUDE EMISSIONS AND STACK PARAMETERS

Source	Heat Input mm Btu/Hr	Fuel	Emissions lbs/Hr					Stack Parameters					
			Particulates	SO_2	Total Organics	CO	NO_x	Mass Flow lbs/Hr	ACFM	Velocity FPS	Height Ft.	Temperature °F	Diameter Ft.
1. Hvy Oil Hydro-cracking	466.7	3.1×10^3 gal/hr	46.7	132.6	15.5	12.5	124.5	432.1×10^3	165.3×10^3	60	200	450	7.65
2. Isomeriza-tion	17.2	115 gal/hr	1.7	4.9	0.5	0.5	4.6	15.9×10^3	6.1×10^3	60	200	450	1.47
3. Reformer	155.4	1.04×10^3 gal/hr	15.6	44.2	5.2	4.2	41.5	143.9×10^3	55.1×10^3	60	200	450	4.42
4. Catalytic Cracker	225.4	1.50×10^3 gal/hr	22.6	64.1	7.5	6.0	60.2	208.7×10^3	79.8×10^3	60	200	450	5.32
5. Hydrogen Plant	608.5	4.06×10^3 gal/hr	81.1	194.7	15.9	16.2	324.5	563.3×10^3	215.5×10^3	60	200	450	8.73
6. Ethylene Plant	227.5	216.7×10^3 SCFH	3.9	5.8	0.7	3.7	49.8	197.1×10^3	78.4×10^3	60	200	450	5.27
7. Alkylation Unit	61.3	58.3×10^3 SCFH	1.1	1.6	0.2	1.0	13.4	53.1×10^3	21.1×10^3	60	200	450	2.73
8. CO Boiler		86.4 gal/hr	20.2	127.8	9.5	8.5	97.4	445.3×10^3	149.5×10^3	60	200	350	7.27
9. Sludge Incinera-tion	15.0	100 gal/hr	2.9	4.8	0.5	1.8	4.1	14.0×10^3	5.4×10^3	60	200	450	1.38
10. Petroleum Storage					226.1						50		
11. Miscel-laneous					1458						5		
TOTAL			195.8	580.5	1739.6	54.4	720						

TABLE 4-2

EPA EMISSION FACTORS

(EN-071)

Emissions	Fuel: Nat. Gas $lb/10^6 ft^3$	Fuel: Resid. Oil $lb/10^3$ gal
Particulates	18	23
SO_2	0.6	157 x S*
HC	3	3
CO	17	4
NO_x	230	40
Aldehydes	---	1

*S = Wt. % Sulfur in fuel oil

to give total organic emissions. Due to the high temperature involved in the hydrogen plant furnace (1700°F), a different set of emission factors were used for the hydrogen plant emissions (RA-119). These factors are shown in Table 4-3.

TABLE 4-3

AIR EMISSIONS FOR STEAM-HYDROCARBON REFORMING FURNACE

	Part.	SO_2	CO	HC	NO_x	Aldehydes
lb/bbl Fuel Oil	0.87	6.72S*	0.168	0.14	3.36	0.025

*wt. % S in the fuel oil

Flue gas rates resulting from fuel combustion were calculated by assuming stoichiometric combustion with 20% excess oxygen. On this basis, combustion of one SCF of refinery gas results in 12.4 SCF of flue gas, and combustion of one gallon of fuel oil results in 1820 SCF of flue gas. A stack velocity of 60 FPS and temperature of 450°F were assumed for stack sizing and dispersion modeling.

4.1.2 CO Boiler

Emissions from the CO boiler were calculated as follows:

(1) Particulate emissions were assumed to be the maximum allowed by Federal emission standards 0.027 gr/dscf (EN-196).

(2) SO_2 emissions in the regenerator flue gas were calculated by assuming that the coke content of the feed was 6%, the wt. % S in the coke was 70% of the wt. % S in the feed,

and all the sulfur in the coke burns to SO_2 (HA-157). Sulfur present in the fuel oil which is normally used to sustain combustion also contributes some SO_2. Stack gas from the sulfur recovery area was combined with the effluent from the CO boiler; therefore, the sulfur dioxide from this source is shown at the CO boiler.

(3) The hydrocarbons in the regenerator flue gas were assumed to be combusted in the CO boiler to a concentration equivalent to the concentration of hydrocarbons in the flue gas generated by normal fuel oil combustion. A distillate oil emission factor of 3 lbs hydrocarbons/Mgal distillate oil (EN-071) was used.

(4) The regenerator flue gas entering the CO boiler contains 71 lbs NO_x/Mbbl of cat cracker capacity (EN-071). Because of the relatively low combustion temperatures in a CO boiler, it is assumed that the only NO_x formed in the CO boiler is from the combustion of NH_3 to NO_x. With these premises, Radian arrived at a NO_x emission factor for CO boilers of 166 lbs NO_x/Mbbl cat cracker capacity.

(5) The emission factor Radian used for calculating the CO emissions from the module CO boiler is 20 ppm. This factor is based on a survey for EPA (EN-072) which reported 20 ppm to be the average CO concentration in CO boiler flue gas.

The CO boiler flue gas rate was calculated as 96,000 SCFM (HA-157). The temperature was set at 350°F (assumes application of heat recovery equipment).

4.1.3 Sulfur Recovery

The sulfur recovery facilities consist of a three reactor Claus plant and a tail gas treating unit. These facilities are considered capable of recovering approximately 99.9% of the equivalent sulfur in the charge (RA-119). For an equivalent sulfur charge of 113,000 lb/day, the sulfur recovered is 112,887 lb/day. Sulfur dioxide from the tail gas treating unit is approximately 226 lb/day or 9.4 lb/Hr. This gas stream is combined with the stack gas of the CO boiler and, therefore, this SO_2 emission is added to the CO boiler emission.

4.1.4 Sludge Incineration

A sludge incinerator is included in the module for the disposal of oily and biological sludges. The quantity of oil incinerated in the oily sludge was estimated to be 1900 gal/day by assuming the following (RA-119):

(1) 0.0015 bbl of oily sludge/bbl syn-crude throughput is produced.

(2) Oily sludge is 36.6 wt.% oil.

(3) Weight of the sludge is 340 lbs/bbl.

Assuming the oily sludge to have similar combustion characteristics to residual oil, the EPA emission factors for residual oil combustion (EN-071) were used to determine emissions. Using BOD quantities and crude rates from the Radian Refinery Siting Study (RA-119), biological sludges associated with the module were determined to be 4167 lb/day. Assuming a 0.5 lbs volatile

solids/lbs BOD removed and a 95% BOD removal efficiency, volatile solids from waste treatment were calculated to be 1980 lbs/day. Assuming these sludges to be similar to those of municipal wastes, the emission factors for municipal waste incinerators (EN-071) were used to define the biological sludge's contribution to the incinerator emissions. Emission factors used for the sludge incineration are shown in Table 4-4. Sulfur dioxide emissions from residual oil combustion were determined by assuming 0.005 wt. % S in the oil. Aldehyde emissions were added by the hydrocarbon emissions to yield total organic emissions.

4.1.5 Petroleum Storage Emissions

The following assumptions based on literature data and experience were formulated to calculate the hydrocarbon emissions from petroleum storage.

> Storage capacity is one month for feed and products.
>
> Only syn-crude and gasoline storage will result in significant emissions. Residual and distillate fuel oil storage create negligible emissions due to low vapor pressures. High volatility products are stored under pressure in completely sealed vessels.
>
> All feed and product storage will be in floating roof tanks.

Using petroleum storage emission factors for floating roof tanks (EN-071) for crude oil (0.029 lb/day-10^3 gal) and gasoline (0.033 lb/day-10^3 gal), hydrocarbon emissions from storage were calculated to be 226 lb/hr. These emissions were estimated to occur at a height of 50 feet.

TABLE 4-4

EMISSION FACTORS FOR SLUDGE INCINERATION

	Oily Sludge Residual Oil Combustion In Process Boilers	Biological Sludge Municipal Incinerator With Controls
Particulates	23	14
SO_2	157 x S*	2.5
HC	3	1.5
CO	4	35
NO_x	40	3
Aldehydes	1	--

* S = wt. % sulfur in fuel oil

4.1.6 Miscellaneous Hydrocarbon Emissions

There are numerous miscellaneous emissions in petroleum refineries which escape from sources such as valve stems, flanges, loading racks, equipment leaks, pump seals, sumps, and API separators. These losses are discussed in Radian's Refinery Siting Report (RA-119). Based on literature data, Radian found that the miscellaneous hydrocarbon emissions amount to about 0.1% of the refinery capacity for a new, well-designed, well-maintained refinery. The composition of these hydrocarbons can be expected to be a composite of all volatile intermediate and refined products.

4.2 Water Effluents

Module water effluents were estimated from information published in the Radian Refinery Siting Study (RA-119). The wastewater generation rate is taken as 15 gal/bbl syn-crude. Although only 10 out of 43 petroleum refineries surveyed by API in 1967 (AM-041) reported aqueous effluent rates of 15 gal/bbl or less, a new refinery is expected to be in the lower range due to the use of air cooling, recycle, and new water conservation techniques (DI-044). For a 100,000 BPD module, the wastewater effluent is 1.5×10^6 gal/day. This quality of this effluent is defined in Table 4-5.

4.2.1 Suspended Solids

The API survey of petroleum refinery effluents indicated that 3 out of 23 refineries achieved suspended solids concentrations of 10 ppm or less and that 6 out of 23 refineries

TABLE 4-5

MODULE EFFLUENT WATER QUALITY

Wastewater rate = 1.5×10^6 gal/day

	Concentration (ppm)	Amount (lbs/day)
Suspended solids	10	125
Dissolved Solids	370	4,625
Total Organics	2.1	26.3

achieved suspended solids concentrations of 13 ppm or less in their wastewaters (AM-041). Based upon these data, Radian used a suspended solids concentration of 10 ppm for the effluent waters from this module. The mass flow rate of suspended solid in the module wastewater is 125 lbs/day.

4.2.2 Dissolved Solids

Beychok (BE-147) reports that the dissolved solids level in an typical refinery waste is 386 ppm for a wastewater flow rate of 14.4 gal/bbl. Based upon the assumption that the dissolved solids rate from a refinery is fixed by the refinery's capacity, then the dissolved solids concentration is inversely proportional to the wastewater flow rate. For the module's wastewater flow rate of 15 gal/bbl the dissolved solids concentration is approximately 370 ppm. At this concentration, 4625 lbs/day of dissolved solids are discharged with the wastewater from the module.

In general, as recycling increases and effluent rates decrease, the dissolved solids content can be expected to increase. The dissolved solids content will become more sensitive to make-up water quality and to soluble salt pick-up in process water. Dissolved solids will become variable from refinery to refinery under these circumstances. The value chosen for this module implies a relatively high quality make-up water. However, this value is supported by the API survey in which 16 of 26 refineries report effluent TDS values of less than 400 ppm (AM-041).

4.2.3 Total Organics

Calculated effluent total organic concentration levels for this module are based on information for oils and phenols contained in the Radian Refinery Siting Report (RA-119). A

2.1 ppm total organic concentration was assumed. The API survey (AM-041) showed that 5 out of 31 companies were able to lower wastewater oil levels to 2 ppm with biological treatment. Based upon these data, an oil concentration of 2 ppm is considered reasonable for a new refinery.

Beychok (BE-147) reported that a phenol level of 0.1 ppm in refinery wastes can be achieved with a well-designed biological waste treatment system. The 1967 API survey of petroleum refineries reported that 8 out of 38 refineries reached phenol levels of 0.1 ppm with biological treatment. For this module, a phenol concentration of 0.1 ppm is assumed. Using an assumed concentration of 2.1 ppm for total organics, 26.3 lbs/day of total organics are calculated to be emitted in the module wastewater.

4.3 Thermal

The use of cooling towers should result in negligible thermal pollution of receiving water bodies.

4.4 Solid Waste

Quantities of solids from refineries are highly variable. Possible sources of solid waste in a refinery are the following:

(1) entrained solids in the crude

(2) silt from surface drainage

(3) silt from water supply

(4) corrosion products from process units and sewer systems

(5) solids from maintenance and cleaning operations

(6) water treatment sludges

(7) spent catalyst

With the exception of spent catalyst, the solids usually collect as an oily sludge in the API separators and in the water treatment plant. Literature sources (AM-042, MA-226, RA-081, and RE-048) indicated a solid waste of three tons per day for the 200,000 BPD refinery defined in the Radian Refinery Siting Report. Therefore, a solid waste of 1.5 tons per day is chosen for the 100,000 BPD module. This waste is assumed to be suitable for landfill purposes.

APPENDIX C

III-H. DOMESTIC CRUDE REFINERY

1.0 INTRODUCTION

Petroleum refining is an established industry and, as a result, the technology associated with refining a typical domestic crude is well defined. In general, the processing steps involved with refining depend upon the quality of crude oil and the product distribution required. A typical U. S. refinery will charge a medium sulfur domestic crude mix and produce the normal array of liquid products ranging from light ends through residual oil with emphasis on gasoline production. Although processing options are available, the processing sequence for such a refinery is reasonably straightforward. As a result of the established and widely practiced procedures for refining crude oil, a refinery module was obtained by determining the operations and processing sequences employed in refining a typical domestic crude. For this module, a Gulf Coast mix of approximately 35° API was used for the charge crude. A crude sulfur content of 0.76 wt. % was assumed (BA-230).

2.0 MODULE BASIS

This module is based on a typical refinery size of 100,000 BPD* of crude capacity. The module values discussed in the following sections are determined for this 100,000 BPD basis. However, the emission values for this module are also expressed on a 10^{12} Btu/day output of major liquid fuels in order to facilitate a comparison of this with other energy conversion modules defined for this study. Major liquid fuels which are assumed to be produced by this module include gasoline, distillate fuel oil, and residual oil. A summary of the emissions from a domestic crude refinery module producting 10^{12} Btu/day of liquid fuels is presented in Table 2-1.

*All flow rates in this module are based on calendar days.

TABLE 2-1

SUMMARY OF ENVIRONMENTAL IMPACTS
DOMESTIC CRUDE REFINERY MODULE
Basis: 10^{12} Btu Output Liquid Fuel

Air (lb/hr)	
Particulates	398
SO_2	968
NO_x	1210
CO	89.9
HC	3011
Water (lb/hr)	
Suspended Solids	246
Dissolved Solids	9121
Organic Material	51.8
Thermal (Btu/hr)	0
Solid Wastes (tons/day)	3.0
Land Use (acres)	4295
Water Requirements (gal/day)	11.2×10^6
Occupational Health (per year)	
Deaths	0.475
Injuries	35.0
Man-days lost	8363
Efficiency (%)	
Primary Fuels Efficiency	90.4
Total Products Efficiency	95.4
Overall Efficiency	94.7
Ancillary energy (Btu/day)	8.46×10^9

3.0 MODULE DESCRIPTION

The feed to this module is a domestic crude mix of approximately 35° API and 0.76 wt % S (BA-230). The module produces 0.52 bbl gasoline, 0.24 bbl distillate fuel oil, and 0.14 bbl residual fuel oil, per bbl of charge. The processing sequence may basically be summarized as follows:

(1) First, the crude oil is separated into light ends, naphtha, distillate oil, gas oil, and residual oil. A series of parallel operations follow this separation as the various fractions are processed to achieve the desired products.

(2) The straight run naphtha is desulfurized and then upgraded (isomerization and/or catalytic reforming) to product gasoline quality.

(3) Light ends are treated for acid gas (H_2S and CO_2) removal and then separated for specific uses. Normally, methane is consumed as fuel gas while ethane and propane rich streams are used for petrochemical feedstocks. Butanes are routed with butylenes to alkylation units for conversion to motor alkylate.

(4) The distillate oil fraction is normally desulfurized with some additional production of naphtha, and either used in-plant or sold as a distillate fuel.

(5) The gas oil from the crude may be desulfurized and then routed to a fluid catalytic cracker for conversion to gasoline. The gas oil fraction may be recycled to extinction while producing light ends, gasoline, distillate fuel, and residual fuel.

(6) The residual oil fraction is also desulfurized. Some additional naphtha and distillate fuel may be produced as a result of this step. The desulfurized residual fuel is used as a plant fuel with the excess routed to product tankage.

In addition to the units required for product processing, auxiliary units such as sulfur recovery, tail gas treating, hydrogen generation, sour water stripping, and wastewater treating are utilized.

3.1 Module Processes

The process units and processing sequences used in this refinery module were obtained from the Radian Refinery Siting Study (RA-119). The processing units included in this module are the following:

crude desalter
atmospheric distillation unit
vacuum distillation unit
naphtha HDS unit
distillate HDS unit
gas oil HDS unit
residual oil HDS unit
gas treating plant
sulfur recovery unit
tail gas treating unit
isomerization unit
light end recovery unit
ethylene plant
catalytic reformer
alkylation unit
fluid catalytic cracker
CO boiler

hydrogen plant
sour water stripper
wastewater treating plant
gasoline blending

A flow diagram of the domestic crude refinery module is shown in Figure 3-1.

3.2 Module Basis and Flow Rates

Flow rates for the refinery were taken from the Radian Refinery Siting Study (RA-119). In this module, crude charged to the refinery is first desalted and then routed to the atmospheric distillation tower. In this tower, the crude is separated into light ends, naptha, distillate oil, atmospheric gas oil, and reduced crude. Product distribution from the atmospheric tower is as follows:

light ends	920,000	lb/day
naphtha	28,300	BPD
distillate oil	17,000	BPD
gas oil	10,000	BPD
reduced crude	40,000	BPD

The reduced crude is routed to a vacuum distillation tower and split into vacuum gas oil and vacuum residuum. Typical product splits and utility requirements for crude distillation were obtained from the Radian study. Radian assumed that 40% of the incoming crude would be charged to the vacuum tower as reduced crude (RA-119).

All liquid streams from the crude distillation unit are assumed to be routed to hydrotreaters for desulfurization.

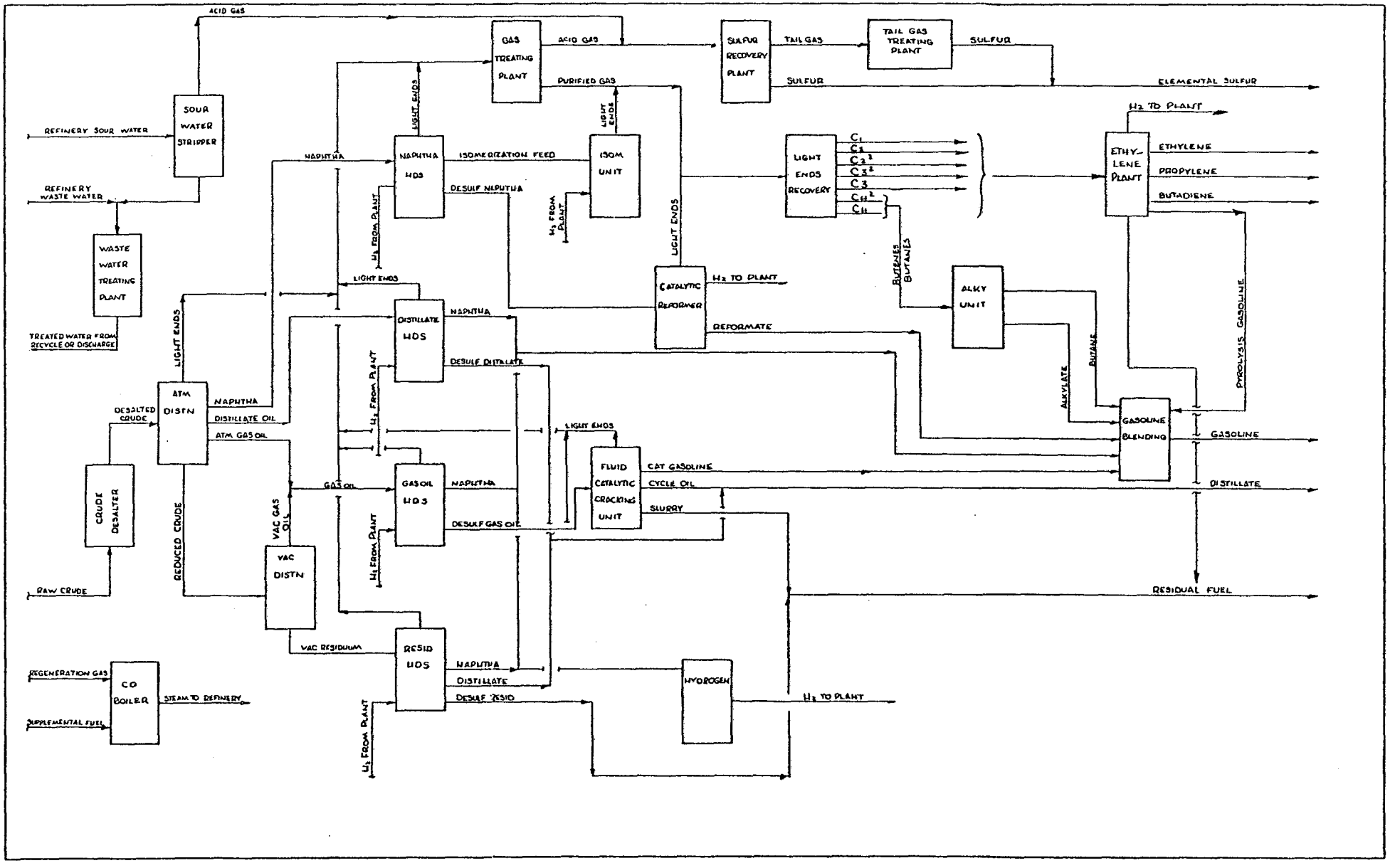

FIGURE 3-1 DOMESTIC CRUDE REFINERY MODULE

Straight run naphtha from the crude distillation process goes to a naphtha hydrotreater. This unit was based on the Unionfining Hydrotreating Process (HY-013). Naphtha yield is 100 vol.% of the feed. Light end production is approximately 4 scf/bbl of charge or 15,000 lb/day. The light ends are routed to gas treating facilities for acid gas removal. Approximately 30 vol% of the desulfurized naphtha from the hydrotreater (8490 BPD) is routed to an isom unit while 70 vol.% of the product stream (19,810 BPD) is routed to a catalytic reformer. Distillate oil from the atmospheric distillation tower goes to a distillate oil hydrotreater. Information for this module unit was obtained from the Gulfining Hydrotreating Process and the GO-fining Process (HY-013). The desulfurized product is 99.6 vol.% of the charge. This stream, 16,592 BPD, is routed to distillate fuel storage. Naphtha produced at this unit (1.7 vol. % of the feed = 714 BPD), is routed to the gasoline blending facilities. Light end production is approximately 0.75 wt.% of the feed. This stream, 45,000 lb/day, goes to the gas treating facilities for acid gas removal. Gas oil streams from the atmospheric and vacuum distillation towers are routed to a gas oil hydrotreater. This unit was also based on the Unionfining Hydrotreating Process (HY-013) Desulfurized gas oil yield is 97.6 vol % of the feed, or 29,880 BPD. This stream is routed to a fluid catalytic cracker. Naphtha yield is 4.2 vol % of the charge. The naphtha goes to gasoline blending. Light end production is approximately 17 SCF/bbl or 270,000 lb/day. The light ends are routed to gas treating facilities for acid gas removal.

Vacuum resid from the vacuum distillation tower is routed to a resid hydrotreater. Information on this unit was obtained from the Gulf Hydrotreating Process and the Standard Oil Resid Hydrotreating Process. Products include desulfurized resid, distillate oil, naphtha, and light ends. Desulfurized

resid yield is 83.6 vol.% of the feed, or 16,720 BPD. This stream is routed to residual fuel product tankage. Distillate oil production is 3,000 BPD or 15 vol.% of the charge. This product stream goes to distillate fuel storage. Naphtha yield is 4.2 vol. % of the feed (840 BPD). A portion of this stream (630 BPD) is routed to the steam-naphtha reformer for hydrogen production. The remaining naphtha goes to the gasoline blending facility. Light end production is approximately 1.7 wt.% of the feed. Light ends are routed to the gas treating plant for acid gas removal.

The refinery hydrogen demand is considered to be 42.7 x 10^6 scfd. This value is estimated from the Radian Refinery Siting Study (RA-119). Some hydrogen is supplied by both the catalytic reformer (24 x 10^6 scfd) and the ethylene plant (5.6 x 10^6 scfd). The difference (13.1 x 10^6 scfd) is supplied by a hydrogen generation plant. A steam-naphtha reformer is used. The naphtha requirement for this unit is 12.98 lb/10^3 scf or 630 BPD (VO-025).

The fluid catalytic cracker receives 29,880 BPD from the gas oil hydrotreater. Product yields and utility requirments were based on the Gulf Development Corporation's Riser Cracking Process (HY-013). Product streams from the catalytic cracker include light ends, naphtha, distillate fuel and residual fuel. The residual oil from this unit is approximately 6.5 vol% of the feed. This stream (1942 BPD) is routed to product tankage. Distillate fuel yield is 15.5 vol.% of the feed or 4632 BPD. This product stream is routed to distillate fuel tankage. Naphtha production is 17,480 BPD or 58.5 vol.% of the feed. This product stream is routed to the gasoline blending facilities. Light ends from the cat cracker go to a light end recovery unit. The light end yield is 2.22 x 10^6 lb/day. Composition of the light end stream is determined by riser cracking yield data (HY-013).

A CO boiler is included in the refinery module to combust the carbon monoxide in the flue gas from the cat cracker regenerator. The CO boiler serves the purpose of reducing the carbon monoxide emission while recovering heat in the form of flue gas sensible heat and carbon monoxide heat of combustion. Fuel oil added to sustain combustion is considered to be 10% of the energy supplied by CO combustion (RA-119). Using data on the composition of regenerator flue gases (HA-157) and on the specific heats and heats of combustion of gases (PE-030), heat from the CO boiler is determined to be as follows:

sensible heat	104	MM Btu/hr
CO combustion	112	MM Btu/hr
fuel combustion	11	MM Btu/hr

The total heat recovered by the CO boiler, 227 MM Btu/hr, is sufficient to meet module steam demands. Therefore, a separate boiler for steam generation will not normally be in operation.

The gas treating plant receives light ends from the atmospheric distillation tower, the four hydrotreating units, and the fluid catalytic cracker. An amine unit is used to remove the acid gas (H_2S and CO_2) from the gas stream. The sweetened gas stream is routed to the light end recovery facilities. The hydrogen sulfide rich stream goes to a Claus plant for sulfur recovery. Radian assumed 100% H_2S removal at the gas treating facilities.

Equivalent sulfur in the acid gas is determined by a module sulfur balance assuming that the distillate and residual fuels contain 0.3 wt.% S. The sulfur recovery facilities consist of a three reactor Claus plant and a tail gas treating unit. These facilities are considered capable of recovering approximately 99.9% of the equivalent sulfur in the charge to the Claus plant (RA-119). For an equivalent sulfur charge of 43,751 lb/day,

the sulfur recovered is 43,707 lb/day or 19.5 LTPD. Stack gas from the tail gas treating unit is routed into the CO boiler effluent gases.

The isomerization unit of the module receives 30 vol.% of the straight run desulfurized naphtha. Process yields and utility requirements were obtained from the British Petroleum Trading Limited Isomerization Unit data (HY-013). The isomerate yield is 100 vol.%. The isomerate stream is routed to gasoline blending. Light ends produced from the isom unit are approximately 1.1 wt % of the isom unit charge. The hydrogen requirements for this unit were assumed to be negligible.

The catalytic reformer receives 70 vol % of the straight run desulfurized naphtha. The module reformer was based on data from the Rheniforming and Ultraforming processes (HY-013). Products from the reformer include hydrogen, light ends, and reformate. The reformate produced is approximately 73 vol % of the naphtha feed or 14,460 BPD. This product stream is routed to gasoline blending. Light end yield is approximately 15.7 wt % of the feed. Light ends from the reformer are routed to the light end recovery unit. The composition of the light end stream was taken from data given on the Engelhard Minerals and Chemical Corp. Reformer (HY-006). Hydrogen production from this unit is 1210 scf/bbl feed for a total of 24.0×10^6 scfd.

The light end recovery unit receives gases from the gas treating plant, isom unit and catalytic reformer. Total light end charge is approximately 4.13×10^6 lb/day. Composition is determined by mass balance and specific unit yield data. Since this module includes an ethylene plant to upgrade the low molecular weight paraffins, the light end recovery section separates propane and lighter components from the process gas stream to supply feed for the ethylene plant. The butane and butene rich stream is routed to an alkylation unit.

The ethylene plant receives approximately 1.79 x 10^6 lb/day charge including 101,000 lb/day ethylene, 200,000 lb/day ethane, and 437,000 lb/day propane. Yields are based on information from the Radian Refinery Siting Study (RA-119). Products from the ethylene plant include ethylene, propylene, butadiene, gasoline, and fuel oil. The methane rich stream from the ethylene plant is used for refinery fuel gas.

The alkylation unit received 170.9 x 10^6 lb/day C_4 and 630 x 10^3 lb/day C_4=. Assuming complete conversion of the limiting reactant (butene) alkylate production is 5,225 BPD. This stream is routed to gasoline blending. Excess butane, approximately 1.06 x 10^6 lb/day, also goes to the gasoline blending facilities.

The gasoline blending facilities receive gasoline components from the ethylene plant, alkylation unit, isom unit, catalytic reformer and catalytic cracker. Total gasoline make is 52,458 BPD.

3.3 Module Heat Requirements

Overall module heat requirements were determined from process unit utility requirements and flow rates. Heat requirements for the various process units are presented in Table 3-1. The total module heat requirement is 34.7 x 10^9 Btu/day. This heat requirement is supplied by refinery gas with a heating value of 1050 Btu/scf. The refinery gas should be capable of supplying approximately 18.2% of the heat requirement or 6.3 x 10^9 Btu/day. The difference is supplied by residual fuel oil. The fuel oil heating value is assumed to be 6.3 x 10^6 Btu/bbl (EN-071). In order to determine emissions at specific sources, fuel gas was considered to be used at the ethylene plant and fuel oil was assumed to be utilized at the other processing units.

TABLE 3-1

MODULE HEAT REQUIREMENT

(RA-119, HY-013)

Unit	Heat Requirement Per bbl Charge (M Btu/bbl)	Flow Rate (BPD)	Unit Heat Requirement (Btu/day)
Atmospheric Distillation (1)	80	100,000	8.00×10^9
Vacuum Distillation	50	40,000	2.00×10^9
Naphtha HDS	25	28,300	0.71×10^9
Distillate HDS	55	17,000	0.94×10^9
Gas Oil HDS	55	30,000	1.65×10^9
Resid HDS	64	20,000	1.28×10^9
Isomerization	68.4	8,490	0.58×10^9
Catalytic Reformer	265	19,810	5.25×10^9
Fluid Catalytic Cracker	153.7	29,880	4.59×10^9
Alkylation (2)	240	5,225 BPD alkylate	1.25×10^9
Ethylene Plant (3)	8760	715×10^3 lb/day C_2=	6.26×10^9
Hydrogen Plant (4)	165.4	13.1×10^6 SCFD H_2	2.17×10^9
		TOTAL	34.68×10^9

(1) Crude distillation heat requirement 100M Btu/bbl. Radian assumed 80% of this heat requirement at atmospheric tower.

(2) Alkylation heat requirement based on alkylate production.

(3) Ethylene plant heat requirement based on ethylene production.

(4) Hydrogen plant heat requirement based on 10^3 scf hydrogen production.

Ancillary energy required by the module as electricity is estimated as 3% of the total heat requirements (1.07×10^9 Btu/day) (BA-230). This value was compared to the available process utility information (HY-013) and the higher value was used as the ancillary energy requirement of the refinery. Since process utility information indicates an electrical requirement of 429×10^3 kwhr/day or 1.46×10^9 Btu/day, this value was used as the ancillary energy requirement. Considering the energy required to produce electricity, a conversion of 10,000 Btu/kwhr is used to determine an ancillary energy of 4.28×10^9 Btu/day. Ancillary energy requirement for a module producing 10^{12} Btu/day of primary liquid fuels is 8.46×19^9 Btu/day.

3.4 Module Efficiency

Three different efficiency terms are defined for each of the modules considered in this study. These three efficiencies are defined as follows:

(1) Primary fuels efficiency:

Primary liquid fuels from the domestic crude refinery module are naphtha, distillate oil, and residual oil. The primary fuels efficiency is the heating value of these three products divided by the heating value of the crude feed. This value is 90.4% for this module.

(2) Total Products efficiency:

This efficiency credits any other hydrocarbon products made. Sulfur is not included. Total products efficiency is the heating value of all hydrocarbon products divided by the heating value of the feed. This efficiency accounts for the by-products such as ethylene, propylene, and butadiene in this module. The total products efficiency of the domestic crude refinery module is 95.4%.

(3) Overall Efficiency:

This efficiency takes into account any ancillary energy such as electricity that may be supplied to a module. This efficiency is equal to the heating value of all hydrocarbon products divided by the heating value of the feed plus any ancillary energy needs of the module. The overall efficiency for this module is 94.7%.

Determinations of these efficiencies for the domestic crude refinery are shown in Table 3-2.

3.5 Water Requirements

The makeup water requirement for the module was estimated from the module heat requirement and the wastewater effluent, assuming that heat (evaporation) and wastewater represent the only significant losses of water from the system. The heat requirement of 34.7×10^9 Btu/day was estimated to result in 4.15×10^6 gal/day of water evaporated from the module (1000 Btu/lb H_2O) or approximately 0.99 bbl water/bbl crude. Wastewater effluent was set at 15 gal/bbl crude (RA-119). From these two rates a makeup water requirement of 1.35 bbl/bbl crude (5.65×10^6 gal/day) was defined. Water requirement for a refinery producing 10^{12} Btu/day of primary liquid fuels is 11.2×10^6 gal/day.

3.6 Land Requirements

The land requirement for a grass roots refinery is estimated to be 218 acre/10,000 BPD (NE-046). The land requirement for this module is 2180 acres or 3.4 square miles. The Radian Refinery Siting Study estimated that 1/4 of the land is used for process units and 2/3 for the tank farm, with the remainder being unused boundary.

TABLE 3-2
EFFICIENCY CALCULATIONS FOR DOMESTIC
CRUDE REFINERY MODULE

Module Stream	Heating Value	Amount	Total Heat
Crude	5.6×10^6 Btu/bbl	100,000 BPD	5.60×10^{11} Btu
Gasoline	5.248×10^6 Btu/bbl	52,458 BPD	2.75×10^{11} Btu
Distillate Fuel	5.88×10^6 Btu/bbl	24,224 BPD	1.41×10^{11} Btu
Residual Fuel	6.3×10^6 Btu/bbl	14,265 BPD	0.90×10^{11} Btu

Primary Efficiency = 5.06/5.6 = 90.4

Ethylene	21,625	715,000 lb	0.15×10^{11} Btu
Propane-Propylene	21,339	550,000 lb	0.12×10^{11} Btu
Butadiene	20,217	30,000 lb	0.01×10^{11} Btu

Total Products Efficiency = 5.34/5.6 = 95.4%

Ancillary Energy = 4.28×10^9 Btu/day

Overall Efficiency = 5.34/5.64 = 94.7%

3.7 Occupational Health

Occupational health data were obtained from the Battelle study (BA-230). Values for deaths, injuries, and man-days lost were presented on a 10^6 Btu output basis in the Battelle study. These values were adjusted to a 10^{12} Btu/day output basis for this study.

4.0 ENVIRONMENTAL EFFECTS

4.1 Air Emissions

Air emissions from the module result from fuels combustion (process heaters), CO boiler, sulfur recovery, sludge incineration, petroleum storage, and miscellaneous hydrocarbon emissions. Module air emissions and stack parameters are shown in Table 4-1.

4.1.1 Fuel Combustion Emission

Fuel combustion emission sources were determined to be the following:

atmospheric distillation
vacuum distillation
naphtha hydrotreater
distillate hydrotreater
gas oil hydrotreater
resid hydrotreater
isom unit
catalytic cracker
catalytic reformer
hydrogen plant
ethylene plant
alkylation unit

Emissions from these sources are calculated by use of EPA fuel combustion factors (EN-071).

Factors for the combustion of fuel gas and residual fuel oil are shown in Table 4-2. Sulfur dioxide emissions from fuel gas combustion were determined by assuming that the fuel gas

TABLE 4-1

AIR EMISSIONS AND STACK PARAMETERS
100,000 BPD REFINERY MODULE

SOURCE	HEAT DUTY MMBTU/HR	FUEL	EMISSIONS lbs/hr					STACK PARAMETERS					
			PARTIC-ULATES	SO_2	TOTAL ORGANICS	CO	NO_x	MASS FLOW LB/HR	ACFM	VEL. FPS	HT. FT.	TEMP °F	DIAM. FT.
Atm. Distillation	331.5	2.21×10^3 gal/hr	50.8	104	8.83	8.83	88.3	307.4×10^3	117.6×10^3	60	200	450	6.45
Vac. Distillation	84.5	562.5 gal/hr	12.9	26.5	2.25	2.25	22.5	78.0×10^3	29.8×10^3	60	200	450	3.25
Naphtha HDS	28.0	187.5 gal/hr	4.3	8.8	0.75	0.75	7.5	25.9×10^3	10.0×10^3	60	200	450	1.88
Distillate HDS	37.5	250 gal/hr	5.75	11.8	1.0	1.0	10	34.7×10^3	13.2×10^3	60	200	450	2.17
Gas Oil HDS	69.0	458 gal/hr	10.5	21.6	1.83	1.83	18.3	63.5×10^3	24.3×10^3	60	200	450	2.93
Residual HDS	55.4	370 gal/hr	8.5	17.4	1.43	1.48	14.8	51.4×10^3	19.7×10^3	60	200	450	2.64
Isomerization	25.0	166.7 gal/hr	3.83	7.85	0.67	0.67	6.66	23.1×10^3	8.85×10^3	60	200	450	1.77
Catalytic Cracker	190.5	1.27×10^3 gal/hr	29.2	59.9	5.08	5.08	50.8	176.3×10^3	67.4×10^3	60	200	450	4.89
Reformer	212.5	1.42×10^3 gal/hr	32.7	66.9	5.68	5.68	56.8	192.5×10^3	75.3×10^3	60	200	450	5.16
Hydrogen Plant	90.3	602 gal/hr	12.0	28.8	2.4	2.4	48.0	83.6×10^3	31.8×10^3	60	200	450	3.35
Ethylene	262.5	250×10^3 SCFH	4.5	67.0	0.75	4.25	60	227.3×10^3	90.3×10^3	60	200	450	5.66
Alkylation	53.0	353 gal/hr	8.13	16.6	1.41	1.41	14.1	49.0×10^3	18.7×10^3	60	200	450	2.57
CO Boiler		73.3 gal/hr	15.4	108.7	8.05	8.06	206.8	378×10^3	127×10^3	60	200	450	6.70
Sludge Incineration	14.7	97.1 gal/hr	2.8	4.67	0.45	1.83	4.0	14.2×10^3	5.2×10^3	60	200	450	1.35
Petroleum Storage					243						50		
Miscellaneous					1240						5		
TOTAL			201.3	490.2	1523.6	45.5	608.0						

TABLE 4-2

EPA EMISSION FACTORS

(EN-071)

Emissions	Fuel: Nat. Gas $lb/10^6 ft^3$	Fuel: Resid. Oil $lb/10^3 gal$
Particulates	18	23
SO_2	0.6	157 x S*
HC	3	3
CO	17	4
NO_x	230	40
Aldehydes	--	1

*S = wt. % sulfur in fuel oil

contained 0.10 gr H_2S/dscf fuel gas (ST-124). Sulfur dioxide emissions from the distillate fuel were determined by assuming a 0.3 wt % S content. Aldehyde emissions from fuel oil combustion were combined with hydrocarbons to give total organic emissions. Due to the high temperature involved in the hydrogen plant furnace (1700°F), a different set of emission factors was used for the hydrogen plant emissions (RA-119). These factors are shown in Table 4-3.

TABLE 4-3

AIR EMISSIONS FOR STEAM-HYDROCARBON REFORMING FURNACE

	Part.	SO_2	CO	HC	NO_x	Aldehydes
lb/bbl fuel oil	0.84	6.72S*	0.168	0.14	3.36	0.025

*wt % sulfur in fuel oil

Flue gas rates resulting from fuel combustion were calculated by assuming stoichiometric combustion with 20% excess oxygen. Combustion of one scf of refinery gas results in 12.4 scf of flue gas. Combustion of one gallon of residual oil results in 1820 scf of flue gas. A stack velocity of 60 fps and temperature of 450°F were assumed.

4.1.2 CO Boiler

Emissions from the CO boiler were calculated as follows:

1) Particulate emissions were assumed to be the maximum allowed by Federal emission laws, 0.027 gr/dscf (EN-196).

2) SO_2 emissions in the regenerator flue gas were calculated by assuming that the coke content of the feed was 6%, the wt % S in the coke was 70% of the wt % S in the feed, and all the sulfur in the coke burns to SO_2 (HA-157). Sulfur in the fuel oil, necessary to sustain combustion, also contributes SO_2 emissions. Stack gas from the sulfur recovery unit was combined with the effluent from the CO boiler; therefore, the sulfur dioxide from this source is shown at the CO boiler.

3) The hydrocarbons in the regenerator flue gas were assumed to be combusted in the CO boiler to a concentration equivalent to the concentration of hydrocarbons in the flue gas generated by normal fuel oil combustion. A residual oil emission factor of 3 lbs. hydrocarbons/Mgal residual oil (EN-071) was used.

4) The regenerator flue gas entering the CO boiler contains 71 lbs NO_x/Mbbl of cat cracker capacity and 54 lbs NH_3/Mbbl of cat cracker capacity (EN-071). Because of the relatively low combustion temperatures in a CO boiler it was assumed that the only NO_x formed in the CO boiler is from the combustion of NH_3 to NO_x. With these premises Radian arrived at a NO_x emission factor for CO boilers of 166 lbs NO_x/Mbbl cat cracker capacity.

5) The emission factor Radian used for calculating CO emissions from the module CO boiler were 20 ppm. This factor is based on an EPA survey (EN-072) which reported 20 ppm to be the average CO concentration in CO boiler flue gas. The CO boiler flue gas rate was calculated as 81,500 scfm (HA-157). The temperature was set at 350°F assuming the application of heat recovery equipment.

solids from waste treatment were calculated to be 1980 lbs/day. Assuming these sludges to be similar to those of municipal waste, the emission factors for municipal waste incineration (EN-071) were used to define the biological sludge's contribution to the incinerator emissions. Emission factors used for the sludge incinerator are shown in Table 4-4.

4.1.5 Petroleum Storage Emissions

The following assumptions based on literature data and experience were formulated to calculate hydrocarbon emissions from petroleum storage.

Storage capacity is one month for feed and products.

Only crude and gasoline storage will result in significant emissions. Residual and distillate fuel oil storage create negligible emissions due to low vapor pressures. High volatility products are stored under pressure in completely sealed vessels.

All feed and product storage will be in floating roof tanks.

Using petroleum storage emission factors for floating roof tanks (EN-071) for crude oil (0.029 lb/day-10^3 gal) and gasoline (0.033 lb/day-10^3 gal), hydrocarbon emissions from storage were calculated to be 243 lb/hr. The height of these emissions was estimated to be 50 feet.

4.1.3 Sulfur Recovery

The sulfur recovery facilities consist of a three reactor Claus plant and a tail gas treating unit. These facilities are considered capable of recovering approximately 99.9% of the equivalent sulfur in the charge (RA-119). For an equivalent sulfur charge of 43,751 lb/day, the sulfur recovered is 43,707 lb/day. Sulfur dioxide from the tail gas treating unit is approximately 88 lb/day or 3.7 lb/hr. This gas stream is considered routed into the stack gas of the CO boiler and, therefore, this SO_2 emission is added to the CO boiler emissions.

4.1.4 Sludge Incinerator

A sludge incinerator is included in the module for the disposal of oily and biological sludges. The quantity of oil incinerated in the oily sludge was estimated to be 1900 gal/day by assuming the following (RA-119):

1. 0.0015 bbl of oily sludge produced/bbl crude throughput.

2. Oily sludge is 36.6 wt % oil.

3. Weight of the sludge is 340 lbs/bbl.

Assuming the oily sludge to have similar combustion characteristics to residual oil, the EPA emission factors for residual oil combustion (EN-071) were used to determine emissions. Using BOD quantities and crude rates from the Radian Refinery Siting Study (RA-119), biological sludges associated with the module were determined to be 4167 lb/day. Assuming 0.5 lbs volatile solids/lbs BOD removed and a 95% BOD removal efficiency, volatile

TABLE 4-4

EMISSION FACTORS FOR SLUDGE INCINERATOR

	Oily Sludge Residual Oil Combustion in Process Boilers	Biological Sludge Municipal Incinerator with controls
Particulates	23	14
SO_2	157 x S*	2.5
HC	3	1.5
CO	4	35
NO_x	40	3
Aldehydes	1	--

*S = wt. % sulfur in the fuel oil

4.1.6 Miscellaneous Hydrocarbon Emissions

There are numerous miscellaneous hydrocarbon emissions in petroleum refineries which escape from sources such as valve stems, flanges, loading racks, equipment leaks, pump seals, sumps, and API separators. These losses are discussed in Radian's Refinery Siting Report (RA-119). Based on literature data, Radian found that the miscellaneous hydrocarbon emissions amount to about 0.1% of the refinery capacity for a new, well-designed, well-maintained refinery. The composition of these hydrocarbons can be expected to be a composite of all volatile intermediate and refined products.

4.2 Water Effluents

Module water effluents were estimated from information published in Radian Refinery Siting Study (RA-119). The wastewater generation rate was taken as 15 gal/bbl crude. Although only ten out of 43 petroleum refineries surveyed by API in 1967 (AM-041) reported aqueous effluent rates of 15 gal/bbl or less, a new refinery is expected to be in the lower range due to the use of air cooling, recycle, and new water conservation techniques (DI-044). For the 100,000 BPD module the wastewater effluent is 1.5×10^6 gal/day. This effluent is defined in Table 4-5.

4.2.1 Suspended Solids

The API survey of petroleum refinery effluents indicated that 3 out of 23 refineries achieved suspended solids concentrations of 10 ppm or less and that 6 out of 23 refineries achieved suspended solids concentrations of 13 ppm or less in their wastewaters (AM-041). Based upon these data, Radian used a suspended solids concentration of 10 ppm for the effluent

TABLE 4-5

DOMESTIC CRUDE REFINERY MODULE

WATER EFFLUENTS

Wastewater Production Rate = 1.5×10^6 gal/day

	Concentration (ppm)	Amount (lbs/day)
Suspended Solids	10	125
Dissolved Solids	370	4,625
Total Organics	2.1	26.3

waters from the module. The mass flow rate of suspended solid in the module wastewater is 125 lbs/day.

4.2.2 Dissolved Solids

Beychock (BE-147) reports that the dissolved solids level in an example refinery waste is 386 ppm for a wastewater flow rate of 14.4 gal/bbl. Based upon the assumption that the dissolved solids discharge rate is fixed by the refinery's capacity, the dissolved solids concentration is inversely proportional to the wastewater flow rate. For this module's wastewater flow rate of 15 gal/bbl, the dissolved solids concentration would be approximately 370 ppm. At this concentration, 4625 lbs/day of dissolved solids are discharged with the wastewater from the module.

In general, as recycling increases and effluent rates decrease, the dissolved solids content can be expected to increase. The dissolved solids content will become more sensitive to makeup water quality and to soluble salt pick-up in process water. Dissolved solids will become variable from refinery to refinery under these circumstances. The value chosen for this refinery implies a relatively high quality makeup water. However, this value is supported by the API survey, since 16 of 26 refineries reported effluent TDS values of less than 400 ppm (AM-041).

4.2.3 Total Organics

A total organic concentration value of 2.1 ppm was based on information for oil and phenol levels reported in the Radian Refinery Siting Study, (RA-119). The API survey (AM-041) showed that 5 out of 31 companies were able to lower wastewater oil levels to 2 ppm with biological treatment. Based upon these data,

an oil concentration of 2 ppm is considered reasonable for a new refinery.

Beychock (BE-147) reported that a phenol level of 0.1 ppm in refinery wastes can be achieved with a well-designed biological waste treatment system. The 1967 API survey of petroleum refineries reported that 8 out of 38 refineries reached phenol levels of 0.1 ppm with biological treatment. For this module, a phenol concentration of 0.1 ppm was assumed. Using a 2.1 ppm concentration for total organics, 26.3 lbs/day of total organics were calculated to be emitted in the module wastewater.

4.3 Thermal

Use of cooling towers should result in negligible thermal pollution.

4.4 Solid Waste

Quantities of solids from refineries are highly variable. Possible sources of solid waste in a refinery are the following:

1) entrained solids in the crude

2) silt from surface drainage

3) silt from water supply

4) corrosion products from process units and sewer systems

5) solids from maintenance and cleaning operations

6) water treatment sludges

7) spent catalyst

With the exception of spent catalyst, these solids usually collect as an oily sludge in the API separators and in the water treatment plant. Literature sources (AM-042, MA-226, RA-081, and RE-048) indicated a solid waste of three tons per day for the 200,000 BPD refinery in the Radian Refinery Siting. Therefore, a solid waste production rate of 1.5 tons per day was chosen for the 100,000 BPD refinery considered here. This waste is suitable for landfill purposes.

APPENDIX C

III-I. FOSSIL FUEL-FIRED STEAM ELECTRIC GENERATION

1.0 INTRODUCTION

This section describes Radian Corporation's module for the generation of electricity from fossil fuels. This is a multiple module, with emission and efficiency data given for a variety of boiler fuels used in a midwestern location. Boiler fuels considered are low Btu fuel gas, western coal, Illinois coal, physically cleaned Illinois coal, chemically cleaned Illinois coal, residual fuel oil and natural gas. Pollution control equipment utilized includes wet cooling towers, electrostatic precipitators, and limestone SO_2 scrubbers. Most of the module emission data presented here are based upon information published by Battelle (BA-230). When applicable, Battelle's numbers are used directly. In many cases, however, additions or corrections to Battelle's numbers have been made by Radian using best available data and engineering judgment.

2.0 MODULE BASIS

Impact parameters which are presented here were developed for a power plant capable of a net production of 10^{12} Btu/day of electricity. This is equivalent to a net power plant capacity of 12,200 Mw.

3.0 MODULE DESCRIPTION

The power plants described in this study are new plants which utilize supercritical steam boiler systems to drive steam turbines which in turn drive generators. The other facilities of each plant consist of processing equipment similar to that found in older conventional power plants. Tables 3-1 to 3-7 summarize the impacts of power plants located in the midwest burning the various fossil fuels considered and using limestone SO_2 scrubbers or electrostatic precipitators as required to meet applicable federal new source performance standards. Modules requiring limestone SO_2 scrubbers do not use electrostatic precipitators since the scrubbers will adequately control particulate emissions.

3.1 Module Efficiency

The primary product efficiency of the power plant itself is assumed to be 37%. This efficiency is defined as the net electrical energy output of the plant divided by the energy input to the plant. Net electrical energy output is defined as gross electrical energy generated minus any plant auxiliary energy requirements. Generally, power plants produce no saleable by-products and require no ancillary energy input. Therefore, the total product and overall efficiencies of the power plant are equal to the primary product efficiency.

For power plants utilizing a flue gas desulfurization (FGD) unit, approximately 5% of the gross energy output of the plant is required by the FGD system. Therefore, power plants utilizing FGD systems are assumed to have an efficiency of 35%.

TABLE 3-1

SUMMARY OF ENVIRONMENTAL IMPACTS

POWER PLANT WITH ELECTROSTATIC PRECIPITATOR

Fuel: Western Coal

Location: Midwest

Basis: Production of 10^{12} Btu/day equivalent of electrical energy

Air (lb/hr)	
Particulates	6,140
SO_2	124,000
NO_x	84,500
CO	4,700
HC	1,430
Water (lb/hr)	
Suspended Solids	2,830
Dissolved Solids	16,000
Organic Material	1,220
Thermal (Btu/hr)	0
Solid Wastes (tons/day)	9,130
Land Use (acres)	9,760
Water Requirements (gal/day)	117×10^6
Occupational Health (per year)	
Deaths	0.32
Injuries	13.4
Man-Days Lost	5,000
Efficiency (%)	
Primary Product Efficiency	37
Total Product Efficiency	37
Overall Efficiency	37
Ancillary Energy (Btu/day)	0

TABLE 3-2

SUMMARY OF ENVIRONMENTAL IMPACTS

POWER PLANT WITH LIMESTONE SCRUBBER

Fuel: Illinois Coal

Location: Midwest

Basis: Production of 10^{12} Btu/day equivalent of electrical energy

Air (lb/hr)	
Particulates	9,520
SO_2	74,000
NO_x	97,300
CO	5,410
HC	1,650
Water (lb/hr)	
Suspended Solids	3,000
Dissolved Solids	16,900
Organic Material	1,280
Thermal (Btu/hr)	0
Solid Wastes (ton/day)	54,900
Land Use (acres)	9,760
Water Requirements (gal/day)	131×10^6
Occupational Health (per year)	
Deaths	0.35
Injuries	14.6
Man-Days Lost	5,500
Efficiency (%)	
Primary Product Efficiency	35
Total Product Efficiency	35
Overall Efficiency	35
Ancillary Energy (Btu/day)	0

TABLE 3-3

SUMMARY OF ENVIRONMENTAL IMPACTS

POWER PLANT WITH LIMESTONE SCRUBBER

Fuel: Physically Cleaned Illinois Coal

Location: Midwest

Basis: Production of 10^{12} Btu/day equivalent of electrical energy

Air (lb/hr)	
Particulates	5,690
SO_2	41,300
NO_x	93,200
CO	5,180
HC	1,570
Water (lb/hr)	
Suspended Solids	3,000
Dissolved Solids	16,900
Organic Material	1,280
Thermal (Btu/hr)	0
Solid Wastes (tons/day)	31,600
Land Use (acres)	9,760
Water Requirements (gal/day)	131×10^6
Occupational Health (per year)	
Deaths	0.35
Injuries	14.6
Man-Days Lost	5,500
Efficiency (%)	
Primary Product Efficiency	35
Total Product Efficiency	35
Overall Efficiency	35
Ancillary Energy (Btu/day)	0

TABLE 3-4

SUMMARY OF ENVIRONMENTAL IMPACTS

POWER PLANT WITH LIMESTONE SCRUBBER

Fuel: Residual Fuel Oil

Location: Midwest

Basis: Production of 10^{12} Btu/day equivalent of electrical energy

Air (lb/hr)	
Particulates	63
SO_2	21,800
NO_x	83,300
CO	2,380
NC	2,380
Water (lb/hr)	
Suspended Solids	3,000
Dissolved Solids	16,900
Organic Material	1,280
Thermal (Btu/hr)	0
Solid Wastes (tons/day)	9,940
Land Use (acres)	3,660
Water Requirements (gal/day)	131×10^6
Occupational Health (per year)	
Deaths	0.35
Injuries	14.6
Man-Days Lost	5,500
Efficiency (%)	
Primary Product Efficiency	35
Total Product Efficiency	35
Overall Efficiency	35
Ancillary Energy (Btu/day)	0

TABLE 3-5

SUMMARY OF ENVIRONMENTAL IMPACTS

POWER PLANT

Fuel: Low Btu Fuel Gas from Illinois Coal

Location: Midwest

Basis: Production of 10^{12} Btu/day equivalent of electrical energy

Air (lb/hr)	
Particulates	1,680
SO_2	58,300
NO_x	67,500
CO	1,920
HC	112
Water (lb/hr)	
Suspended Solids	2,830
Dissolved Solids	16,000
Organic Material	1,220
Thermal (Btu/hr)	0
Solid Wastes (tons/day)	0
Land Use (acres)	1,830
Water Requirements (gal/day)	117×10^6
Occupational Health (per year)	
Deaths	0.32
Injuries	13.4
Man-Days Lost	5,000
Efficiency (%)	
Primary Product Efficiency	37
Total Product Efficiency	37
Overall Efficiency	37
Ancillary Energy (Btu/day)	0

TABLE 3-6

SUMMARY OF ENVIRONMENTAL IMPACTS

POWER PLANT

Fuel: Natural Gas

Location: Midwest

Basis: Production of 10^{12} Btu/day equivalent of electrical energy

Air (lb/hr)	
Particulates	1,680
SO_2	68
NO_x	67,500
CO	1,920
HC	112
Water (lb/hr)	
Suspended Solids	2,830
Dissolved Solids	16,000
Organic Material	1,220
Thermal (Btu/hr)	0
Solid Wastes (tons/day)	0
Land Use (acres)	1,830
Water Requirements (gal/day)	117×10^6
Occupational Health (per year)	
Deaths	0.32
Injuries	13.4
Man-Days Lost	5,000
Efficiency (%)	
Primary Product Efficiency	37
Total Product Efficiency	37
Overall Efficiency	37
Ancillary Energy (Btu/day)	0

TABLE 3-7

SUMMARY OF ENVIRONMENTAL IMPACTS

POWER PLANT WITH LIMESTONE SCRUBBER

Fuel: Chemically Cleaned Illinois Coal

Location: Midwest

Basis: Production of 10^{12} Btu/day equivalent of electrical energy

Air (lb/hr)	
Particulates	8,890
SO_2	29,200
NO_x	89,300
CO	4,960
HC	1,510
Water (lb/hr)	
Suspended Solids	3,000
Dissolved Solids	16,900
Organic Material	1,280
Thermal (Btu/hr)	0
Solid Wastes (tons/day)	33,500
Land Use (acres)	9,760
Water Requirements (gal/day)	131×10^6
Occupational Health (per year)	
Deaths	0.91
Injuries	34.1
Man-Days Lost	2,252
Efficiency (%)	
Primary Product Efficiency	35
Total Product Efficiency	35
Overall Efficiency	35
Ancillary Energy (BTu/day)	0

3.2 Fuel Requirements

Table 3-8 lists the important characteristics of the boiler fuels used in this study. Based on the efficiencies given in Section 3.1, a 37% efficient plant requires 2.70×10^{12} Btu/day of energy input while a 35% efficient plant requires 2.86×10^{12} Btu/day in order to produce 10^{12} Btu/day of electrical energy. Table 3-9 lists the fuel rates which meet these energy requirements.

3.3 Water Requirements

The major consumer of water in a power plant is the cooling tower system. In addition, a flue gas desulfurization unit (FGD), if present, requires make-up water. Other water requirements of the plant are insignificant compared to the above two items.

The make-up water for the cooling tower system replaces three losses; drift, blowdown and evaporation. The magnitude of each of these losses was calculated from mass and energy balances around the cooling system using the following assumptions or data.

1) 48% of input heat to the plant is sent to the cooling towers

2) 75% of the heat lost in the cooling towers is dissipated via evaporation

3) the heat of vaporization of water is 1050 Btu/lb

4) the cooling water temperature rise across the steam condenser is $25^{\circ}F$

TABLE 3-8

IMPORTANT CHARACTERISTICS OF POWER PLANT FUELS

	Western Coal	Illinois Coal	Physically Cleaned Illinois Coal	Chemically Cleaned Illinois Coal	Residual Fuel Oil	Low Btu Fuel Gas	Natural Gas
Ash	6.0	11.0	6.87	11.2	-	-	-
Sulfur	0.51	3.6	2.10	1.55	1.75	-	-
Heat Value	8,806	11,000	11,500	12,000	6.3×10^6	193	1,000

Notes: (1) Ash and sulfur figures are in wt %.

(2) Heating values are expressed as Btu/lb for coal, Btu/bbl for fuel oil and Btu/SCF for gases.

(3) Sulfur content of low Btu fuel gas from western coal is 0.0458 lbS/10^6Btu.

(4) Sulfur content of low Btu fuel gas from Illinois coal is 0.259 lbS/10^6Btu.

TABLE 3-9

POWER PLANT FUEL REQUIREMENTS

Basis: Net production of 10^{12} Btu/day of electricity

Fuel	Power Plant Efficiency	Fuel Requirements
Western Coal	37%	153,000 tons/day
Illinois Coal	35%	130,000 tons/day
Physically Cleaned Illinois Coal	35%	124,000 tons/day
Chemically Cleaned Illinois Coal	35%	119,000 tons/day
Residual Fuel Oil	35%	454,000 bbl/day
Low Btu Fuel Gas	37%	14.0×10^9 SCF/day
Natural Gas	37%	2.70×10^9 SCF/day

(5) cooling tower drift losses are 0.02% of the cooling water circulation rate

For a power plant with a 37% efficiency, cooling tower make-up water requirements are 81,200 gpm or 117 x 10^6 gal/day. For a plant with a 35% efficiency, cooling tower make-up water requirements are 85,800 gpm or 124 x 10^6 gal/day.

The make-up water requirement of an FGD unit is assumed to be 4880 gpm. This figure is calculated by assuming (1) the FGD unit inlet flue gas temperature is 250°F and (2) the FGD unit adiabatically saturates the flue gas. It might be possible to use cooling tower blowdown as make-up water to the FGD units but in this study it is assumed that fresh make-up is used.

The make-up water requirements for a power plant with a 37% efficiency are 117 x 10^6 gal/day. The water requirements for a plant with a 35% efficiency are 131 x 10^6 gals/day including cooling tower and FGD units needs.

3.4 Land Usage

From Battelle (BA-230), the land requirements for a 1000 Mw power plant are 150, 300, and 800 acres for gas, residual fuel oil and coal fired plants, respectively. Linearly scaling to a 12,200 Mw plant gives the land requirements of 1830, 3660, and 9760 acres for gas, residual fuel oil and coal fired plants, respectively.

3.5 Occupational Health

The data on injuries, deaths and man-days lost for the power plant module were taken directly from Battelle (BA-230). These numbers have been converted from Battelle's basis of 10^6 Btu of electricity production to Radian's basis of 10^{12} Btu/day of electricity produced.

4.0 MODULE EMISSIONS

4.1 Air Emissions

Essentially, the only air emissions from a power plant come from the boiler flue gas produced during combustion of the plant's fuel. Emission rates of particulates, SO_2, NO_x, CO, and hydrocarbons are calculated from fuel rates, fuel ash and sulfur contents and emission factors from "Compilation of Air Pollutant Emission Factors" (EN-071). Aldehyde and organic emissions are both included in the hydrocarbon category. Table 4-1 lists the emission factors used.

Sulfur emissions resulting from the firing of low Btu fuel gas were calculated from the sulfur content of the fuel gas fired (see Table 3-8, notes 3 and 4). All other emissions from firing low Btu fuel gas were calculated using the natural gas equivalent of the low Btu fuel and natural gas emission factors.

Sulfur and particulate emissions from firing subbituminous coal were calculated using actual coal rates. However, CO, NO_x and hydrocarbon emissions were calculated using bituminous coal equivalent flows (the bituminous coal was assumed to have a heating value of 12,000 Btu/lb)(HI-083).

SO_2 scrubbers and electrostatic precipitators were used as necessary to control SO_2 and particulates. The electrostatic precipitators were assumed to remove 99% of the particulate matter in the flue gas. SO_2 scrubbers were assumed to remove 90% of the SO_2 and 99% of the particulates.

In order to evaluate the effect that particulates, SO_2, NO_x, CO and hydrocarbon emissions have on ambient air

TABLE 4-1

EMISSION FACTORS FOR UNCONTROLLED COMBUSTION OF FOSSIL FUELS

Source: "Compilation of Air Pollutant Emission Factors" (EN-071)

Fuel	Emission Factor Units	Particulates	SO_2	NO_x	Hydrocarbons	CO
Coal	lb/ton coal burned	16xA	38xS	18	0.305	1
Fuel Oil	$lb/10^3$ gal	8	157xS	105	3	3
Natural Gas	$lb/10^6$ SCF	15	0.6	600	1	17

Notes: (1) A is ash content of fuel in percent.

(2) S is sulfur content of fuel in percent.

quality, it is necessary to define certain stack parameters used in calculating ambient air conditions. Table 4-2 lists the air emissions and stack parameters for each type of power plant considered in this study.

Mass and volumetric flow data shown in Table 4-2 were calculated from material balances. Stoichiometric combustion was assumed with 25% excess air. Volumetric flow rates were based on an assumed exit gas temperature of 250°F. Stack heights and gas velocities were also assumed. Stack diameters were calculated from assumed gas velocities and volumetric flow rates.

4.2 Water Emissions

Water emissions were characterized by defining suspended solids, total dissolved solids and organic matter contents. Battelle (BA-230) states that suspended solids and organic matter in power plant liquid wastes amount to 0.036 lb/10^6 Btu of fuel burned. Of this total, 70% is suspended solids and 30% is organic matter. This factor and plant heat rates were used to calculate these two emissions. Total dissolved solids (TDS) were calculated by assuming that cooling tower blowdown, the most significant liquid waste stream, contained 10,000 ppm of TDS. For a plant with a 35% efficiency, the TDS load is 16,900 lb/hr.

4.3 Solid Wastes

Solid wastes from a power plant consist of ash and/or SO_2 scrubber wastes. For coal fired plants, the amount of bottom ash produced was assumed to be 20% of the ash brought in with the coal. The amount of SO_2 scrubber waste was calculated using the following assumptions.

TABLE 4-2

AIR EMISSIONS AND STACK PARAMETERS FOR 1000 MW POWER PLANTS

Source	Heat Input MM Btu/Hr	Fuel	Emissions lbs/Hr					Stack Parameters					
			Parti-culates	SO_2	Total Organics	CO	NO_x	Mass Flow lbs/Hr	ACFM	Velocity FPS	Height Ft.	Temperature °F	Diameter Ft.
Stack gas	9220	Western coal	503	10,200	117	385	6920	10.0×10^6	2.95×10^6	60	500	250	32.3
Stack gas w/ SO_2 scrubber	9750	Ill. coal	780	6,060	135	443	7970	11.0×10^6	3.31×10^6	60	500	250	34.2
Stack gas w/ SO_2 scrubber	9750	Phy. Clean Ill. coal	466	3,380	129	424	7630	11.0×10^6	3.31×10^6	60	500	250	34.2
Stack gas w/ SO_2 scrubber	9750	Residual fuel oil	52	1,790	195	195	6820	9.94×10^6	3.02×10^6	60	500	250	32.7
Stack gas	9220	Low BTU gas from Ill. coal	138	4,780	9.22	157	5530	9.89×10^6	2.94×10^6	60	500	250	32.2
Stack gas	9220	Natural gas	138	5.53	9.22	157	5530	9.01×10^6	2.80×10^6	60	500	250	31.4
Stack gas w/ SO_2 scrubber	9750	Chem. Clean Ill. coal	728	2,390	124	406	7310	10.4×10^6	3.05×10^6	60	500	250	32.8

For a limestone SO_2 scrubber:

(1) The sludge wastes are ponded and the settled composition is 60% sludge and 40% water.

(2) The sludge consists mainly of $CaSO_3 \cdot \frac{1}{2}H_2O$, $CaSO_4 \cdot 2H_2O$, $Ca(OH)_2$ and ash.

(3) The sludge, ash excluded, is 20% sulfur.

(4) The scrubber removes 90% of the flue gas sulfur.

Coal ash is the only solid waste from the power plant firing western coal and utilizing an electrostatic precipitator. Solid wastes from this plant were calculated as the total ash rate to the boiler minus the particulate emissions to the air. No solid wastes were assumed to be produced by power plants firing natural gas or low Btu fuel gas.

4.4 Thermal Discharges

All thermal discharges to water bodies were assumed to be negligible due to the use of wet cooling towers.

APPENDIX C

IV. TRANSPORTATION MODULES

A. Railway

B. Pipeline

APPENDIX C

IV-A. RAILWAY

1.0 INTRODUCTION

The railway is one of the major land transportation modes utilized to move small as well as large quantities of commodities. To date, there are about 206,000 track miles (mainline right-of-way) in the U.S. (GO-090). The types of railway currently employed for transporting coal can be classified according to the type of locomotive power plant used, namely diesel electric train or electric train. The former type is predominantly used.

Electric trains are in use today as energy transport systems on a limited basis, although they were introduced in the U.S. more than 70 years ago (GO-090). The two electric trains that transport coal are: the Muskingum Electric Railroad and the Black Mesa and Lake Powell (BM&LP) Electric Railroad. The Muskingum Electric Railroad transports about 18,000 tons of coal per day to American Electric Power's Muskingum River power plant at Zanesville, Ohio - served by a 15-mile long electrified rail system (FI-067, OL-020, OL-021, TI-025, WE-110, WE-116). The BM&LP Electric Railroad hauls approximately 30,000 tons of coal per day from the Black Mesa Mine near Kayenta, Arizona to the Navajo Generating Station at Page, Arizona, a distance of 78 miles (AU-018, EL-054).

Electric trains have some advantages and disadvantages. They consume less fuel, have a higher relative availability index, have no direct air emissions and are much quieter than their diesel electric counterparts (BA-223, EL-050, EN-036, EN-199, GO-090, TH-058). Their major drawback is the formidable cost of the catenary system (EL-050). Since electric trains are not widely used for coal transportation, they are not pursued further here.

IV-A. Railway

Diesel electric trains have been used in energy transportation for a long period of time. They have been used to transport a variety of energy forms - such as: LPG, LNG, crude oil, coal and radioactive fuel materials.

2.0 COAL RAIL TRANSPORTATION

For diesel electric trains to be considered feasible as a means of transportation for coal, they must meet the following basic requirements.

1. Availability of continuous-service railroad tracks and licensed freight carriers, from the coal mines to the point of coal utilization.

2. Availability of locomotive engines and freight cars.

These basic requirements can be viewed in terms of the existing facilities and the projected growth of the railroad industry, freight car manufacturers, and locomotive suppliers.

Railroads with direct service lines between Illinois coal mines and Chicago are mature, developed coal transporters. Also, a current survey on continuous service routes indicates that one of the major coal transporters has direct service lines between two western states, namely Wyoming and Colorado, and the load center, namely Chicago (BO-120). Thus, the first basic requirement, i.e., availability of continuous-service railroad tracks and licensed freight carrier(s) from the coal mines to the point of coal utilization, is partially satisfied.

The second requirement is the availability of locomotive engines and freight cars. Reports (IN-041, RA-128) submitted to the committee on interstate and foreign commerce and the Committee on Agriculture and Forestry have indicated the existence of a freight car shortage. Commodities, including coal and other energy resource items, are affected by the freight

car shortage. To alleviate this problem, the Department of Transportation announced in mid-1975 that an additional 130,000 cars were needed to meet the car shortage of that year, requiring an investment of $2.3 billion (AL-046). Forecasts show that a one-third growth in rail-freight transportation between 1971 and 1980 will require about 617,000 cars of 80-ton capacity to meet the demand. The Department of Transportation also estimated that a modest $8.8 billion fund will be required to keep abreast with demands of the future. The above statistics do not include freight cars of the 100-ton capacity class, which is the standard size for coal cars of today. Although some funds may be available for the purchase of freight cars, the lead time required is at least two years (BO-120).

The development of western coal will require additional freight cars in the 100-ton capacity class. A new design of a 125-ton capacity is also available which requires new lightweight materials for its construction and implementation. These new materials are required because a freight car's gross weight has to be within the allowable rail limit of about 132 tons (GR-117).

Although there is no report of a locomotive engine shortage, the development of the western states might create one. To order a locomotive engine requires one year lead time for the expected delivery (EN-199, WH-036). The lead time is a function of the manufacturer's rate of production and backlog.

The environmental effects of coal-rail transportation were estimated on the basis of the following major assumptions:

1. A unit train will consist of that number of cars of one hundred ton-capacity which will supply 0.25×10^{12} Btu of energy (≈ 100-150 cars depending on heating value of coal transported) (GR-117).

2. A medium grade traffic requiring approximately 1.4 HP per trailing ton (GE-050).

3. Each unit train will have the required number of diesel electric locomotives rated at 3600 HP each, EMD SD45-2 class with the following fuel consumption characteristics (OV-008):

   at full power: 199 gals/hr/locomotive

   at reduced power: 28 gals/hr/locomotive

4. Track length is equal to highway length, but 10% longer than a pipeline length (WA-139).

5. The train moves at reduced power during the 16 total hours required for loading and unloading (BU-116).

6. One hour is required for passing each large city and for undergoing each federal inspection (BU-116).

7. One large city every 110-track miles (BU-116).

8. Federal inspection every 500-track miles (BU-116).

9. Average train speed in open country is 25 mph (BU-116).

10. Emission factors which apply are those defined for a two-stroke turbocharged line haul class diesel electric locomotive (EN-071, HA-231, SO-066).

11. One percent of the total train load is lost as coal dust blow-off which occurs mainly during loading and unloading, and is independent of the haulage distance (CO-129, HI-090).

12. 50-foot railroad right-of-way per track (CO-129).

13. The train returns to the mine with empty cars.

14. A train loaded with coal is dispatched every 11 or 12 hours; the reason for this is to avoid imposing a continuous load on the track. Otherwise, the track's design service life of 10 years will be reduced to 11 months (BE-238).

15. Two parallel tracks, one delivery track and one return track, both on the same right-of-way.

16. The heating value of western coal is 17.6×10^6 Btu/ton and that of run of mine Illinois coal is 22×10^6 Btu/ton. Physically cleaned Illinois coal is assumed to have a heating value of 23×10^6 Btu/ton.

The aforementioned assumptions were applied to the specific track lengths called for in this study. Two track lengths were considered: an 1100 mile run originating in Wyoming and a 275 mile run originating from an Illinois coal mine.

Coal Rail Transportation Modules

The environmental effects of rail transportation of coal are summarized in Tables 2-1 through 2-3 for the three transportation cases considered. The numbers given are for a module designed to deliver 10^{12} Btu of coal per day (on the average) to the terminal point.

Table 2-1 defines the impacts of transporting 10^{12} Btu/day of western coal over a 1100 mile rail line from Wyoming to Chicago. A round trip requires approximately six days. The rail transport module in this case consists of 24 unit trains operating on two pairs of parallel tracks. Each unit train contains 143 one hundred ton cars and eight 3600 hp locomotives. Each train is assumed to operate at full power for 88 hours, at reduced power for 40 hours, and at zero power for the remainder of the time on a round trip.

TABLE 2-1

SUMMARY OF ENVIRONMENTAL IMPACTS

WESTERN COAL RAIL TRANSPORTATION MODULE*

Air (lb/hr)	
Particulates	6.99×10^2
SO_2	1.59×10^3
NO_x	9.22×10^3
CO	4.46×10^3
HC	7.83×10^2
Water (lb/hr)	0
Thermal (Btu/hr)	0
Solid Wastes (tons/day)	5.72×10^2
Land Use (acres)	2.67×10^4
Water Requirements (gal/day)	0
Occupational Health (per year)	
Deaths	1.03
Injuries	101
Man-Days Lost	9.13×10^3
Primary Efficiency (%)	99
Overall Efficiency (%)	91.6
Ancillary Energy (Btu/day)	8.23×10^{10}

*Twelve unit trains of 143 cars each/pair of tracks (one delivery track and one return track), 2 pairs of tracks, 2.5×10^{11} Btu/unit train, 10^{12} Btu/day delivered.

TABLE 2-2

SUMMARY OF ENVIRONMENTAL IMPACTS

ILLINOIS COAL RAIL TRANSPORTATION MODULE*

Air (lb/hr)	
Particulates	1.36×10^2
SO_2	3.11×10^2
NO_x	1.80×10^3
CO	8.72×10^2
HC	1.53×10^2
Water (lb/hr)	0
Thermal (Btu/hr)	0
Solid Wastes (tons/day)	4.6×10^2
Land Use (acres)	6.67×10^3
Water Requirements (gal/day)	0
Occupational Health (per year)	
Deaths	0.85
Injuries	81.23
Man-Days Lost	7.31×10^3
Primary Efficiency (%)	99
Overall Efficiency (%)	97.4
Ancillary Energy (Btu/day)	1.66×10^{10}

*Four unit trains of 115 cars each/pair of tracks (one delivery track and one return track), 2 pairs of tracks, 2.5×10^{11} Btu/unit train, 10^{12} Btu/day delivered.

TABLE 2-3

SUMMARY OF ENVIRONMENTAL IMPACTS
PHYSICALLY CLEANED ILLINOIS COAL RAIL TRANSPORTATION MODULE*

Air (lb/hr)	
Particulates	1.36×10^2
SO_2	3.11×10^2
NO_x	1.80×10^3
CO	8.72×10^2
HC	1.53×10^2
Water (lb/hr)	0
Thermal (Btu/hr)	0
Solid Wastes (tons/day)	4.4×10^2
Land Use (acres)	6.67×10^3
Water Requirements (gal/day)	0
Occupational Health (per year)	
Deaths	0.79
Injuries	77.70
Man-Days Lost	6.99×10^3
Primary Efficiency (%)	99
Overall Efficiency (%)	97.4
Ancillary Energy (Btu/day)	1.66×10^{10}

*Four unit trains of 100 cars each/pair of tracks (one delivery track and one return track), 2 pairs of tracks, 2.5×10^{11} Btu/unit train, 10^{12} Btu/day delivered.

Table 2-2 defines the impacts of transporting run-of-mine Illinois coal over a 275 mile rail line to Chicago. A round trip for each unit train requires almost two days. The rail transport module in this case consists of eight unit trains operating on two pairs of parallel tracks. Each unit train which consists of 115 one hundred ton cars and six 3600 hp locomotives, is assumed to operate at full power for 22 hours, at reduced power for 22 hours, and at zero power for the remainder of the time on a round trip.

The impacts of transporting physically cleaned Illinois coal to Chicago are defined in Table 2-3. A round trip for a single unit train requires about 2 days. The rail transport module in this case consists of eight unit trains operating on two pairs of parallel tracks. Each unit train, which consists of 110 one hundred ton cars and six 3600 hp locomotives, is assumed to operate at full power for 22 hours, at reduced power for 22 hours, and at zero power for the remainder of the time on a round trip.

Ancillary Energy

The ancillary energy required by each module is computed from the diesel fuel consumption of the unit trains in the module, and a fuel heating value prescribed by the Association of American Railroads (AAR). This heating value is 138,000 Btu/gal at 36° API (WH-036).

Primary Product Efficiency

The primary product efficiency of coal rail transport is about 99%. The losses are due primarily to coal dust blow-off during loading and unloading operations. Thus the effect of transport distance is negligible.

Water Requirements

The only water use in rail transport is for engine cooling which is a negligible amount.

Land Use

Rail transportation land use is computed based on the number of track pairs necessary to deliver 10^{12} Btu/day of coal to the end point. Each track pair is assumed to require a 50 foot right-of-way. A track pair is a set of parallel rail lines, one used for delivery, the other for return.

Occupational Health

Occupational health hazards of unit trains were estimated based on the accident statistics and amount of coal transported for the year 1972. The Federal Railroad Administration's accident bulletin for the calendar year 1972 included statistics of casualties to railroad employees on duty, and the casualties were categorized as follows (US-125): 127 deaths, 12,456 injuries, and 1,123,180 disability days. The man-days lost per injury was computed to be 90.

The Statistical Abstract of the U.S. in 1973 reported that, in 1972, freight tonnage transported by rail totaled 2,544 million tons (US-154). For the same year, the Coal Traffic Annual (NA-184) reported that approximately 136.5 million tons of bituminous coal were transported by unit trains.

Assuming a linear relationship exists between the occupational health statistics and coal tonnage transported, the occupational health statistics for unit trains can be expressed in terms of coal transported. This analysis implies that the occupational health statistics are independent of the mileage distance transported. However, due to the difference in energy content between Western coal and Illinois coal, the occupational health statistics based on 10^{12} Btu/day delivered will differ between the western coal rail module and the Illinois rail module.

Air Emissions

Total air emissions were computed by summing the emissions of locomotive engines. The emissions were estimated by multiplying the emission factors for a two-stroke turbo-charged, line-haul class, diesel electric locomotive, by the computed train fuel consumption.

Water Emissions

Trains have negligible water emissions.

Thermal Emissions

The thermal emissions from trains are negligible.

Solid Wastes

Solid wastes are produced in rail transportation of coal at the loading and unloading points when coal dust is blown off during the loading and unloading processes. This amounts to one percent of the coal transported.

APPENDIX C

IV-B. PIPELINE

1.0 INTRODUCTION

Many commodities are transported by pipeline. The ones of particular interest in this section are oil and natural gas.

In this write-up separate treatments of the environmental effects of crude oil and natural gas pipelines are presented. For each type of pipeline, two cases are considered: a typical existing pipeline of a specific capacity; and a pipeline module that has an equivalent throughput of 10^{12} Btu/day.

2.0 CRUDE OIL PIPELINE

The technology of crude oil transportation by pipeline is well developed and has been applied for decades. Although there have been a number of innovations in crude oil transportation, its technology continues to advance in the areas of materials, techniques of pipe manufacture, and improved design and methods of construction for both pipelines and stations (PE-097, PE-098).

A crude pipeline system consists of pipes and pump stations. Pipe sizes range from a nominal diameter of 6 inches, with a flow of 7,700 barrels per day, to 48 inches with a flow of as much as 10 million barrels per day (PE-098). Both electric and diesel-powered pump stations are widespread. In the early 1960's, pumping stations were spaced approximately every 80 to 90 miles (BA-224), whereas in the newer systems they are spaced about every 100 to 150 miles (BA-234).

Environmental effects of crude oil transportation by pipeline were estimated on the basis of the following assumptions:

1. a throughput of 600,000 barrels per day;

2. a cargo transport propulsion efficiency of 500 cargo ton-miles per gallon of fuel (RI-063);

3. crude oil heating value of 5.8×10^6 Btu/bbl;

4. distillate oil (#2) heating value of 136,000 Btu/gallon;

5. an average right-of-way of 62.5 feet (CO-129, PE-097);

6. a physical loss, due to spillage of 0.006% by volume of the total crude oil transported (CO-129, EN-129);

7. non-degradable organics amount to about 5% of the total quantity of oil spilled (HI-090);

8. pump station spacing of 100-mile (BA-234);

9. pump station land use of 10 acres/site (CO-129);

10. diesel-driven pumps;

11. EPA emission factors for heavy-duty, diesel-powered vehicles (EN-071).

When the above assumptions were applied to the specific crude oil pipeline length required in this study, the environmental impacts summarized in Table 2-1 were obtained.

A typical crude oil pipeline system has an equivalent throughput of 3.48×10^{12} Btu/day and consumes 2.18×10^{10} Btu/day of ancillary energy. This figure was obtained by using Assumptions 1, 2 and 4. The ancillary energy requirement of a 10^{12} Btu/day module is estimated to be 6.26×10^{9} Btu/day.

TABLE 2-1

SUMMARY OF ENVIRONMENTAL IMPACTS

DIESEL OPERATED CRUDE OIL PIPELINE

TYPICAL SIZE - 600,000 BPD (3.48×10^{12} BTU/DAY)

900 MILES LONG - 30" O.D. PIPELINE

TEXAS TO CHICAGO

	Typical/Or Estimated Design	10^{12} Btu/day Module
Air (lb/hr)		
Particulates	87.11	25.03
SO_2	1.81×10^2	52.01
NO_x	2.48×10^3	7.13×10^2
CO	1.50×10^3	4.31×10^2
HC	2.48×10^2	71.26
Water (lb/hr)		
Suspended Solids	0	0
Dissolved Solids	0	0
Organic Material	22.3	6.41
Thermal (Btu/hr)	0	0
Solid Wastes (tons/day)	0	0
Land Use (acres)	6.91×10^3	1.99×10^3
Water Requirements (gal/day)	0	0
Occupational Health (per year)		
Deaths	0.12	3.45×10^{-2}
Injuries	10.03	2.88
Man-Days Lost	1.03×10^3	2.96×10^2
Primary Product Efficiency (%)	100	100
Overall Efficiency (%)	99.4	99.4
Ancillary Energy (Btu/day)	2.18×10^{10}	6.26×10^9

Primary Product Efficiency

The primary product efficiency of a crude oil pipeline is assumed to be 100%, i.e., since the physical loss of 0.006% of the total crude oil transported is negligible.

Water Requirements

Transporting crude oil by pipeline does not require water.

Land Use

Crude oil pipeline land use represents the sum of the pipeline right-of-way and pump stations' land acreage.

Occupational Health

Occupational health hazards involved in transporting crude oil via pipeline were calculated based on the crude oil pipeline accident statistics, trunk pipeline mileage, and volume of crude oil delivered for the year 1973. The American Petroleum Institute's annual summary of disabling work injuries for the year 1973 categorized the casualties as follows (AM-120): 1 death, 83 injuries, and 8,540 man-days lost.

The Interstate Commerce Commission's "Transport Statistics in the United States, 1973" reported that, in 1973, movement of crude oil amounted to 1.63×10^{12} barrel-miles (IN-047).

Assuming a linear relationship exists between the occupational health statistics, trunk pipeline mileage, and

volume of crude oil delivered, the occupational health statistics for the crude oil pipeline system in this report were computed accordingly.

Air Emissions

Air emissions were estimated using emission factors for heavy-duty, diesel-powered vehicles (EN-071), and the computed fuel consumption of the diesel-driven pumps. The results are listed in Table 2-1.

Water Emissions

A minute portion of the crude oil that is spilled from the pipeline system, while in operation, can eventually reach receiving water bodies in the form of non-degradable organics (HI-090). The amount of non-degradable organics is calculated by employing Assumptions 6 and 7. The results of the computation indicate that the crude oil pipeline module accounts for 6.41 pounds of non-degradable organics/hour. A crude oil pipeline system in operation does not produce any form of suspended or dissolved solids that may degrade water bodies.

Thermal

A crude oil pipeline system in operation does not generate any significant thermal emissions.

Solid Wastes

Transporting crude oil by pipeline does not produce any form of solid wastes.

3.0 NATURAL GAS PIPELINE

The transport of natural gas to major markets is primarily accomplished by pipelines. Current pipelines are 24, 30, 36 and 42-inch diameter systems (ST-204, VA-093), and their right-of-way can be as small as 50 feet wide or as much as 75 feet wide, with a mean width of 62.5 feet (KA-134). The compressor stations are driven either by gas engines, gas turbines, or electric compressors. The frequency of compressor stations is one every 50 to 75 miles. Each compression site is assumed to occupy 10 acres of land (CO-129, ST-204).

The purpose of this section is to define the procedures used to quantify the environmental impacts of a pipeline used to transport natural gas from the Texas Gulf Coast to the load center of Chicago. It was assumed here that the required compressor stations are electrically-powered. The impacts of the natural gas pipeline system were computed using the following assumptions:

1. a throughput of 1.25 BCFD;

2. a natural gas heating value of 1,050 Btu/ft^3;

3. the use of electric-driven compressors with a 20,000 hp capacity (ST-204);

4. heat equivalent of electric energy is 10,000 Btu/kwhr;

5. Compressor stations at 50-mile intervals.

6. Compressor station land use of 10 acres per site (CO-129).

7. 62.5-foot pipeline right-of-way (KA-134).

8. No significant fugitive losses of gas.

The electric-operated natural gas pipeline system presented in this section is 900 miles long and is assumed to originate in Texas' gulf coast gas fields. The environmental impacts of this electric pipeline system are given in Table 3-1. Values are given for both a typical design pipeline system and a module having an equivalent throughput of 10^{12} Btu/day.

The typical electric-operated natural gas pipeline system considered here (1.25 BCFD capacity) has an equivalent throughput of 1.31×10^{10} Btu/day. This is calculated using the natural gas heating value of 1,050 Btu/ft .

Ancillary Energy

Electricity is supplied to the natural gas pipeline system by transmission and distribution lines. The amount of energy supplied to the system is estimated by using Assumptions 3 to 6.

Primary Product Efficiency

An electrically-powered natural gas pipeline system is assumed to have a primary product efficiency of 100% since it is assumed that no loss of gas occurs during transport.

TABLE 3-1

SUMMARY OF ENVIRONMENTAL IMPACTS

ELECTRIC-OPERATED NATURAL GAS PIPELINE

1.25 BCFD (1.31 x 10 BTU+/DAY)

900 MILES LONG - 30" O.D. PIPELINE

TEXAS TO CHICAGO

	Typical/or Estimated Design	10^{12} Btu/day Module
Air (lb/hr)	0	0
Particulates	0	0
SO_2	0	0
NO_x	0	0
CO	0	0
HC	0	0
Water (lb/hr)		
Suspended Solids	0	0
Dissolved Solids	0	0
Organic Material	0	0
Thermal (Btu/hr)	0	0
Solid Wastes (tons/day)	0	0
Land Use (acres)	7.00×10^3	5.34×10^3
Water Requirements (gal/day)	0	0
Occupational Health (per year)		
Deaths	1.51×10^{-3}	1.15×10^{-3}
Injuries	4.60×10^{-2}	3.51×10^{-2}
Man-Days Lost	10.22	7.80
Primary Product Efficiency (%)	100	100
Overall Efficiency (%)	95.3	95.3
Ancillary Energy (Btu/day)	6.44×10^{10}	4.92×10^{10}

+ 1,050 Btu/ft^3 of natural gas

Water Requirements

Gas pipeline systems do not require water for their operation.

Land Use

The land use impact of a natural gas pipeline system includes land allocated to the pipeline right-of-way and compressor stations. It is computed using Assumptions 5 to 7.

Occupational Health

Occupational health hazards involved in transporting natural gas via pipeline were calculated based on gas pipeline accident statistics, transmission pipeline mileage, and volume of natural gas delivered for the year 1972. The American Petroleum Institute's annual summary of disabling work injuries for the year 1972 categorized the casualties as follows (AM-120): 10 deaths, 305 injuries, and 67,630 man-days lost.

The Federal Power Commission's "Statistics of Interstate Natural Gas Pipeline Companies-1972" reported that, in 1972, there were 158,906 miles of transmission pipeline with gas volume of 17.1 trillion cubic feet (FE-066).

Assuming a linear relationship between occupational health statistics, transmission pipeline mileage, and volume of natural gas transported, occupational health statistics for the natural gas pipeline system developed for this study were computed.

Air Emissions

Electrically-operated natural gas pipeline systems do not directly produce any form of air emissions.

Water Emissions

Transporting natural gas via pipelines does not result in the production of any liquid wastes.

Thermal Emissions

Heat emissions are negligible.

Solid Wastes

Natural gas pipelines do not produce any form of solid wastes.

APPENDIX C

V. END USE MODULES

1.0 INTRODUCTION

Radian's definition of the environmental impact of all end use modules is restricted to air emissions as there are no data available at the present time that can be used to assess other possible impacts associated with the end uses examined. The thermodynamic efficiency of each equipment type is discussed in Appendix B. As a result, end use module efficiencies are presented in summary tables in this section without including any of the factors involved in their selection. Air emissions are assumed to result only from the combustion of fossil fuels by the end use equipment. Since electrical equipment emits no pollutants to the air, only direct-fired fossil fuel end use module impacts need to be documented. All modules have a common basis of 10^{12} Btu output of useful energy.

Air emissions from each end use module are calculated from EPA emission factors (EN-071), taking into account the efficiency of the module. The emission factors used for these calculations are shown in Tables 1-1 and 1-2.

TABLE 1-1

EMISSION FACTORS FOR FUEL OIL COMBUSTION[1]

	Type of Unit		
	Industrial and Commercial		
	Residual	Distillate	Domestic
Pollutant	$lb/10^3$ gal	$lb/10^3$ gal	$lb/10^3$ gal
Particulate	23	15	10
Sulfur dioxide*	157 x S*	142 x S*	142 x S*
Carbon monoxide	4	5	5
Hydrocarbons	3	3	3
Nitrogen oxides (NO_2)	(40 to 80)	(40 to 80)	12

*S equals percent by weight of sulfur in the oil.

TABLE 1-2

EMISSION FACTORS FOR NATURAL GAS COMBUSTION[1]

	Type of Unit	
	Industrial Process Boiler	Domestic and Commercial Heating
Pollutant	$lb/10^6$ ft^3	$lb/10^6$ ft^3
Particulates	18	19
Sulfur-oxides (SO_2)	0.6	0.6
Carbon monoxide	17	20
Hydrocarbons (CH_4)	3	8
Nitrogen oxides (NO_2)	(120 to 230)	(80 to 120)

[1] Source: (EN-071)

2.0 END USE MODULE IMPACT SUMMARIES

The results of Radian's air emission calculations for the end use modules considered in this study are presented in the environmental impact summary tables which follow.

TABLE 2-1

SUMMARY OF ENVIRONMENTAL IMPACTS

RESIDENTIAL NATURAL GAS-FIRED SPACE HEATING MODULE

Basis: 10^{12} Btu Output of Useful Energy

Air (lb/hr)	
Particulates	1,300
SO_2	42
NO_x	5,600
CO	1,400
HC	560
Efficiency (%)	
Overall Efficiency	60
Ancillary Energy (Btu/day)	0

TABLE 2-2

SUMMARY OF ENVIRONMENTAL IMPACTS

RESIDENTIAL OIL-FIRED SPACE HEATING MODULE

Basis: 10^{12} Btu Output of Useful Energy

Air (lb/hr)	
Particulates	5,400
SO_2	23,000[1] (210)[2]
NO_x	6,500
CO	2,700
HC	1,600
Efficiency (%)	
Overall Efficiency	55
Ancillary Energy (Btu/day)	0

NOTES:

1. .3% sulfur in fuel oil - Fuel Supply Scenario S8 & 10.
2. .005% sulfur in fuel oil - Fuel Supply Scenario S9.

TABLE 2-3

SUMMARY OF ENVIRONMENTAL IMPACTS

RESIDENTIAL NATURAL GAS-FIRED WATER HEATING MODULE

Basis: 10^{12} Btu Output of Useful Energy

Air (lb/hr)	
Particulates	1,300
SO_2	42
NO_x	5,600
CO	1,400
HC	560
Efficiency (%)	
Overall Efficiency	60
Ancillary Energy (Btu/day)	0

TABLE 2-4

SUMMARY OF ENVIRONMENTAL IMPACTS

RESIDENTIAL OIL-FIRED WATER HEATING MODULE

Basis: 10^{12} Btu Output of Useful Energy

Air (lb/hr)	
Particulates	5,400
SO_2	23,000[1] (210)[2]
NO_x	6,500
CO	2,700
HC	1,600
Efficiency (%)	
Overall Efficiency	55
Ancillary Energy (Btu/day)	0

NOTES:

1. .3% sulfur in fuel oil - Fuel Supply Scenario S8 & S10.
2. .005% sulfur in fuel oil - Fuel Supply Scenario S9.

TABLE 2-5

SUMMARY OF ENVIRONMENTAL IMPACTS

RESIDENTIAL NATURAL GAS-FIRED COOKING MODULE

Basis: 10^{12} Btu Output of Useful Energy

Air (lb/hr)	
Particulates	2,100
SO_2	68
NO_x	9,000
CO	2,300
HC	900
Efficiency (%)	
Overall Efficiency	37
Ancillary Energy (Btu/day)	0

TABLE 2-6

SUMMARY OF ENVIRONMENTAL IMPACTS

RESIDENTIAL OIL-FIRED COOKING MODULE

Basis: 10^{12} Btu Output of Useful Energy

Air (lb/hr)	
Particulates	8,800
SO_2	37,000[1] (620)[2]
NO_x	11,000
CO	4,400
HC	2,600
Efficiency (%)	
Overall Efficiency	37
Ancillary Energy (Btu/day)	0

NOTES:

1. .3% sulfur in fuel oil - Fuel Supply Scenario S8 & S10.
2. .005% sulfur in fuel oil - Fuel Supply Scenario S9.

TABLE 2-7

SUMMARY OF ENVIRONMENTAL IMPACTS

COMMERCIAL NATURAL GAS-FIRED SPACE HEATING MODULE

Basis: 10^{12} Btu Output of Useful Energy

Air (lb/hr)	
Particulates	1,000
SO_2	32
NO_x	6,500
CO	1,100
HC	430
Efficiency (%)	
Overall Efficiency	77
Ancillary Energy (Btu/day)	0

TABLE 2-8

SUMMARY OF ENVIRONMENTAL IMPACTS

COMMERCIAL OIL-FIRED SPACE HEATING MODULE

Basis: 10^{12} Btu Output of Useful Energy

Air (lb/hr)	
Particulates	5,900
SO_2	17,000[1] (280)[2]
NO_x	23,000
CO	1,600
HC	1,200
Efficiency (%)	
Overall Efficiency	76
Ancillary Energy (Btu/day)	0

NOTES:

1. .3% sulfur in fuel oil - Fuel Supply Scenario S8 & S10.
2. .005% sulfur in fuel oil - Fuel Supply Scenario S9.

TABLE 2-9

SUMMARY OF ENVIRONMENTAL IMPACTS

COMMERCIAL NATURAL GAS-FIRED WATER HEATING MODULE

Basis: 10^{12} Btu Output of Useful Energy

Air (lb/hr)	
Particulates	1,300
SO_2	42
NO_x	8,300
CO	1,400
HC	560
Efficiency (%)	
Overall Efficiency	60
Ancillary Energy (Btu/day)	0

TABLE 2-10

SUMMARY OF ENVIRONMENTAL IMPACTS

INDUSTRIAL NATURAL GAS-FIRED SPACE HEATING MODULE

Basis: 10^{12} Btu Output of Useful Energy

Air (lb/hr)	
Particulates	1,000
SO_2	32
NO_x	6,500
CO	920
HC	160
Efficiency (%)	
Overall Efficiency	77
Ancillary Energy (Btu/day)	0

TABLE 2-11

SUMMARY OF ENVIRONMENTAL IMPACTS

INDUSTRIAL OIL-FIRED SPACE HEATING MODULE

Basis: 10^{12} Btu Output of Useful Energy

Air (lb/hr)	
Particulates	5,900
SO_2	17,000[1] (280)[2]
NO_x	23,000
CO	1,600
HC	1,200
Efficiency (%)	
Overall Efficiency	76
Ancillary Energy (Btu/day)	0

NOTES:

1. .3% sulfur in fuel oil - Fuel Supply Scenario S8 & S10.
2. .005T sulfur in fuel oil - Fuel Supply Scenario S9.

TABLE 2-12

SUMMARY OF ENVIRONMENTAL IMPACTS

INDUSTRIAL NATURAL GAS-FIRED COOKING MODULE

Basis: 10^{12} Btu Output of Useful Energy

Air (lb/hr)	
Particulates	2,000
SO_2	68
NO_x	14,000
CO	1,900
HC	340
Efficiency (%)	
Overall Efficiency	37
Ancillary Energy (Btu/day)	0

TABLE 2-13

SUMMARY OF ENVIRONMENTAL IMPACTS

INDUSTRIAL NATURAL GAS-FIRED STEEL MAKING MODULE

Basis: 10^{12} Btu Output of Useful Energy

Air (lb/hr)	
Particulates	1,800
SO_2	60
NO_x	24,000
CO	1,700
HC	300
Efficiency (%)	
Overall Efficiency	42
Ancillary Energy (Btu/day)	0

TABLE 2-14

SUMMARY OF ENVIRONMENTAL IMPACTS

INDUSTRIAL OIL-FIRED STEEL MAKING MODULE

Basis: 10^{12} Btu Output of Useful Energy

Air (lb/hr)	
Particulates	11,000
SO_2	30,000[1] (500)[2]
NO_x	43,000
CO	2,800
HC	2,100
Efficiency (%)	
Overall Efficiency	42
Ancillary Energy (Btu/day)	0

NOTE:

1. .3% sulfur in fuel oil - Fuel Supply Scenario S8 & S10.
2. .005% sulfur in fuel oil - Fuel Supply Scenario S9.

TABLE 2-15

SUMMARY OF ENVIRONMENTAL IMPACTS

INDUSTRIAL NATURAL GAS-FIRED HEATING AND ANNEALING MODULE

Basis: 10^{12} Btu Output of Useful Energy

Air (lb/hr)	
Particulates	6,800
SO_2	230
NO_x	87,000
CO	6,400
HC	1,100
Efficiency (%)	
Overall Efficiency	11
Ancillary Energy (Btu/day)	0

TABLE 2-16

SUMMARY OF ENVIRONMENTAL IMPACTS

INDUSTRIAL OIL-FIRED HEATING AND ANNEALING MODULE

Basis: 10^{12} Btu Output of Useful Energy

Air (lb/hr)	
Particulates	41,000
SO_2	120,000[1] (1,900)[2]
NO_x	160,000
CO	11,000
HC	8,100
Efficiency (%)	
Overall Efficiency	11
Ancillary Energy (Btu/day)	0

NOTE:

1. .3% sulfur in fuel oil - Fuel Supply Scenario S8 & S10.
2. .005% sulfur in fuel oil - Fuel Supply Scenario S9.

TABLE 2-17

SUMMARY OF ENVIRONMENTAL IMPACTS

INDUSTRIAL NATURAL GAS-FIRED GLASS MELTING MODULE

Basis: 10^{12} Btu Output of Useful Energy

Air (lb/hr)	
Particulates	4,400
SO_2	150
NO_x	56,000
CO	4,200
HC	740
Efficiency (%)	
Overall Efficiency	17
Ancillary Energy (Btu/day)	0

TABLE 2-18

SUMMARY OF ENVIRONMENTAL IMPACTS

TANK TRUCK DISTRIBUTION OF FUEL OIL MODULE*

Basis: Distribution of 10^{12} Btu of Fuel Oil

From Bulk Terminal to End Use Site (30 miles)

Air (lb/hr)	
Particulates	6
SO_2	12
NO_x	160
CO	100
HC	17
Efficiency (%)	
Primary Product	100
Overall Efficiency	100
Ancillary Energy (Btu/day)	1.5×10^9

*1,400 Tank Trucks, 5,000 gal capacity each, 4 miles per gallon of fuel (NA-187).

REFERENCES

AI-013 Air Products and Chemicals, Inc., Engineering Study and Technical Evaluation of the Bituminous Coal Research, Inc., Two-State Super Pressure Gasification Process, Contract No. 14-32-0001-1204, R&D Rept. 60, Washington, D.C., OCR.

AL-046 To Alleviate Freight Car Shortages, Report of the Senate Committee on Commerce, Senate Rept. 92-982, Calendar No. 932, Washington, D.C., 1972.

AM-041 American Petroleum Inst., Div. of Refining, Recommended Rules for Design and Construction of Large, Welded, Low-Pressure Storage Tanks, API Standard 620, Washington, D.C., 1970.

AM-042 American Petroleum Inst., Div. of Refining, Manual on Disposal of Refinery Wastes, Vol. VI, Solid Wastes, First Edition, Washington, D.C., 1963.

AM-099 American Petroleum Institute, Annual Statistical Review, Petroleum Industry Statistics, 1964-1973, Washington, D.C., 1974.

AM-120 American Petroleum Institute, Annual Summary of Disabling Work Injuries in the Petroleum Industry for 1973, Washington, D.C., 1974.

AU-018 "Automated Black Mesa First 50 KV Railway", Reprint, Railway Gazette Intnat'l, January 1973.

REFERENCES CONTINUED

AV-003 Averitt, Paul, Stripping Coal Resources of the U. S. - January 1, 1970, USGS Bull. 1322, Washington, D.C., GPO, 1970.

BA-158 Battelle, Columbus Labs., Detailed Environmental Analysis Concerning a Proposed Coal Gasification Plant for Transwestern Coal Gasification Co., Pacific Coal Gasification Co., and Western Gasification Co., and the Expansion of a Strip Mine Operation Near Burnham, N. M. Owned and Operated by Utah International, Inc., Columbus, Ohio, 1973.

BA-166 Barry, Charles B., "Reduce Claus Sulfur Emission", Hydrocarbon Proc. 51(4), 102-6 (1972).

BA-223 Battelle-Columbus Laboratories, A Study of the Environmental Impact of Projected Increases in Intercity Freight Traffic, Final Report, Columbus, Ohio, 1971.

BA-224 Battelle-Columbus Laboratories, Topical Report on Energy Requirements for the Movement of Intercity Freight, Columbus, Ohio, 1972.

BA-230 Battelle-Columbus Labs., Environmental Considerations in Future Energy Growth, Contract No. 68-01-0470, Columbus, Ohio, 1973.

BA-234 Battelle-Columbus and Pacific Northwest Labs., Environmental Considerations in Future Energy Growth, Contract No. 68-01-0470, Columbus, Ohio, 1973.

REFERENCES CONTINUED

BA-260 Ball, D., et al., Study of Potential Problems and Optimum Opportunities in Retrofitting Industrial Processes to Low and Intermediate Energy Gas from Coal, Final Report, Contract 68-02-1323, Task I., EPA 650/2-74-052, Columbus, Ohio, Battelle, Columbus Labs., 1974.

BE-147 Beychok, Milton R., Aqueous Wastes from Petroleum and Petrochemical Plants, N. Y., Wiley, 1967.

BE-148 Beavon, David K., "Add-On Process Slashes Claus Tailgas Pollution", Chem. Eng. 78(28), 71-3 (1971).

BE-238 Bentley, Charles, Private Communication, Burlington Northern, Safety Division, 6 January 1975.

BO-117 Bodle, Wm. W. and Kirit C. Vyas, "Clean Fuels from Coal", Oil Gas J., 26 August 1974.

BO-120 Boyce, Allan R., Private Communication, Burlington Northern, Energy, Metallics and Chemicals Section, 28 August 1974.

BR-137 Bright, James R., South Africa's Oil-from-Coal Plant and Its Relevance for Texas, Austin, University of Texas, 1974.

BU-116 Buck, P. and N. Savage, "Determine Unit - Train Requirements", Power 118(1), 90 (1974).

REFERENCES CONTINUED

CH-182 Chilingar, George V. and Carrol M. Beeson, Surface Operations in Petroleum Production, N. Y., American Elsevier, 1969.

CO-129 Council on Environmental Quality, Energy & the Environment, Electric Power, Washington, D.C., 1973.

CO-175 Colony Development Operation, Atlantic Richfield Co., Operator, An Environmental Impact Analysis for a Shale Oil Complex at Parachute Creek, Colorado, Vol. 1, Pt. 1, Plant Complex and Service Corridor, 1974.

DI-044 Diehl, Douglas S., et al., "Effluent Quality Control at a Large Oil Refinery", J. WPCF 43, 2254-70 (1971).

EL-050 "Electrification Looking Increasingly Attractive to U. S. Railroads", Railway Locomotives Cars 148(2), 12 (1974).

EL-052 El Paso Natural Gas Co., Application of El Paso Natural Gas Co. for a Certificate of Public Convenience and Necessity, Docket No. CP73-131, El Paso, Texas, 1973.

EL-054 "Electrification", Progressive Railroading, May-June, 1973 , 64.

REFERENCES CONTINUED

EN-036 Environmental Protection Agency, Office of Noise Abatement and Control, Report to the President and Congress on Noise, Washington, D.C., 1971, PB 206 716.

EN-071 Environmental Protection Agency, Compilation of Air Pollutant Emission Factors, 2nd ed. with Supplements, AP-42, Research Triangle Park, N.C., 1973.

EN-072 Environmental Protection Agency, Office of Air and Water Programs, Office of Air Quality Planning and Standards, Background Information for Proposed New Source Standards: Asphalt Concrete Plants, Petroleum Refineries, Storage Vessels, Secondary Lead Smelters and Refineries, Brass or Bronze Ingot Production Plants, Iron and Steel Plants, Sewage Treatment Plants, Vols. 1 and 2, Research Triangle Park, N.C., 1973.

EN-129 Environmental Protection Agency, "Vapor Recovery Regulations: Changes in Initial Compliance Dates and Request for Comments on Alternative Systems", Fed. Reg. 39(118), 21049-53 (1974).

EN-196 Environmental Protection Agency, "Air Programs, Standards of Performance for New Stationary Sources - Additions and Miscellaneous Amendments", Fed. Reg. 39(47), 9308 (1974).

EN-199 Engel, A. P., Private Communication, General Electric Co., Locomotive Products Dept., Domestic Electrification Projects, 15 August 1974.

REFERENCES CONTINUED

EN-204 Engineering-Science, Inc., Air Quality Assessment of the Oil Shale Development Program in the Piceance Creek Basin, McLean, Va., 1974.

FA-083 Fawnsworth, J. Frank, et al.- "K-T: Koppers Commercially Proven Coal and Multiple-Fuel Gasifier", Pittsburgh, Pa., Koppers Co., Inc. 1974.

FE-066 Federal Power Commission, Statistics of Interstate Natural Gas Pipeline Companies, 1972, Washington, D.C., 1973.

FE-068 Federal Power Commission, Synthetic Gas-Coal Task Force, Final Report, The Supply-Technical Advisory Task Force-Synthetic Gas-Coal, Washington, D.C., 1973.

FI-067 Fisher, H. A. and Blair, A. Ross, "The Muskingum Electric Railroad", N.Y., Electric Power Service Corporation.

GA-107 Gary, James H., ed., Proceedings of the Seventh Oil Shale Symposium, April, 1974, Colorado School of Mines Quarterly 69(2), 1974.

GE-050 General Electric Co., Transportation Systems Div., Applications of Diesel - Electric Locomotives, GED 4204A, Erie, Pa., 1974.

REFERENCES CONTINUED

GO-090 Government - Industry Task Force on Railroad Electrification, A Review of Factors Influencing Railroad Electrification.

GR-117 Greenville Steel Car Co., From Mine to Power Station Greenville Cars Move on Schedule, Greenville, Pa., 1974.

HA-157 Hardison, L.C., "Air Pollution Control Equipment", Petro/Chem. Eng., March 1968.

HA-231 Hare, C. T., J. J. Springer and T. A. Huls, "Locomotive Exhaust Emissions and Their Impact", Presented at the ASME, Diesel and Gas Engine Power Div., Conf., Houston, Texas, 1974.

HE-055 Hellwig, Katherine C., et al., "Convert Coal to Liquid Fuels w/ H-Coal", CEP Symp. Ser. 64(85), 98-103 (1968).

HI-083 Hittman Associates, Inc., Environmental Impacts, Efficiency and Cost of Energy Supplied by Emerging Technologies, Phase 2, Draft Final Report, Tasks 1-11, HIT-573, Contract No. EQC 308, Columbia, Md., 1974.

HI-090 Hittman Associates, Inc., Environmental Impacts, Efficiency and Cost of Energy Supply and End Use, Phase 1, Draft Final Report, HIT-561, Columbia, Md., 1973, Phase 2 - see HI-083.

REFERENCES CONTINUED

HY-006 "Hydrocarbon Processing 1972 Refining Processes Handbook", Hydrocarbon Proc. 51(9), 111-222 (1972).

HY-013 "Hydrocarbon Processing Refining Process Handbook", Hydrocarbon Proc. 53(9) (1974).

IN-041 Inquiry into Freight Car Shortages, Pt. 2, 92nd Congress, 1st & 2nd Sessions, Serial 92-82, Washington, D.C., GPO, 1972.

IN-047 Interstate Commerce Commission, Transport Statistics in the United States for the Year Ended December 31, 1973, Pt. 6, Pipe Lines, Washington, D.C., 1974.

KA-124 Katz, Donald L., et al, Evaluation of Coal Conversion Processes to Provide Clean Fuels, EPRI 206-0-0, Final Report, Ann Arbor, Mich., Univ. of Michigan, College of Engineering, 1974.

KA-134 Katz, L., et al, "Transmission to Market", Handbook of Natural Gas Engineering, N.Y., McGraw, 1959.

LI-094 Litman, R., Private Communication, Union Oil, 17 Feb. 1975.

LO-096 Lorenzi, Lr., Jr., "Plant Design for Chemical Desulfurization of Coal", Presented at the ACS, Spring 1974 Mtg., Low Sulfur Fuels from Coal, Los Angeles.

REFERENCES CONTINUED

LO-126 Lorenzi, Lloyd, Private Communication, Environmental Protection Agency, Raleigh, N.C., 11 March 1975.

MA-226 Mallatt, R. C., J. F. Grutsch and H. E. Simons, "Incinerate Sludge & Caustic", Hydrocarbon Proc. 49, 121 (1970).

NA-172 National Academy of Engineering, Rehabilitation Potential of Western Coal Lands, Ford Energy Policy Project, Cambridge, Mass., Ballinger, 1974.

NA-184 National Coal Association, Coal Traffic Annual, 1974 Ed., Washington, D.C., 1974.

NE-044 Nelson, W. L., Petroleum Refinery Engineering, 4th Ed. McGraw-Hill Series in Chemical Engineering, N. Y., McGraw-Hill, 1958.

NE-046 Nelson, W. L., "How Much Land Investment Needed?", Oil Gas J., 4 Dec. 1972.

NI-036 Nielson, George F., ed., 1974 Keystone Coal Industry Manual, N. Y., McGraw-Hill, Mining Publications, 1974.

OL-020 Oliver, J. A., et al., "The Catenary System and Power Supply Facilities of the Muskingum Electric Railroad", N.Y., American Electric Power Service Corp.

REFERENCES CONTINUED

OL-021 Oliver, J. A., et al., "Electric Locomotives for the Muskingum Electric Railroad", N.Y., American Electric Power Service Corp.

OV-008 Overman, G. J., Private Communication, General Motors Co., Southwestern Region, Electromotive Div., Sept. and Oct., 1974.

PA-139 (Ralph M.) Parsons Company, Demonstration Plant, Clean Boiler Fuels from Coal, OCR R&D Rept. 82, Int. Rept. 1, 2 Vols, Contract No. 14-32-0001-1234, Los Angeles, California.

PE-030 Perry, John H., Chemical Engineers Handbook, 4th Ed., New York, McGraw-Hill, 1963.

PE-097 Petroleum Extension Service, Univ. of Texas, and Pipeline Contractors Assoc., A Primer of Pipeline Construction, 2nd Ed., Austin, Texas, 1966.

PE-098 Petroleum Extension Service, Univ. of Texas, Oil Pipeline Construction and Maintenance, Vol. 2, 2nd Ed., Austin, Texas, 1973.

PF-003 Pforzheimer, H., "Parajo-New Prospects for Oil Shale", CEP 70(9), 62 (1974).

RA-081 Rabb, A., "Sludge Disposal: A Growing Problem", Hydrocarbon Proc. 44(4), 149 (1965).

RA-119 Radian Corporation, A Program to Investigate Various Factors in Refinery Siting, 2 Vols, Final Report with Map Inserts, Austin, Texas, 1974.

REFERENCES CONTINUED

RA-128 Rail Freight Car Shortage, 93rd Congress, 1st Session, Rept. 93-16, Washington, D.C., 1973.

RE-048 Recent Developments in Industrial Pollution Control, Proceedings of the Fourth Annual Northeastern Regional Antipollution Conference, Greater Providence, R.I., College of Engineering, Univ. of Rhode Island, 1971.

RI-063 Rice, Richard A., "System Energy As a Factor in Considering Future Transportation", Presented at the ASME Winter Annual Mtg., N.Y., 1970.

SA-109 Sass, A., "The Production of Liquid Fuels from Coal", Minerals Sci. Eng. 4(4), 18 (1972).

SH-157 "Shale Oil - Process Choices", Chem. Eng. 81(10), 66 (1974).

SO-039 Southwest Energy Study, Dept. of Interior, Study Management Team, Washington, D.C., 1972.

SO-066 Southwest Research Inst., "Exhaust Emissions from Uncontrolled Vehicles and Related Equipment Using Internal Combustion Engines, Pt. 1, Locomotive Diesel Engines and Marine Counterparts", EHS-70-108, APTD-1490, San Antonio, Texas, 1972.

ST-124 "Standards of Performance for New Stationary Sources - Proposed Standards for Seven Source Categories", Fed. Reg. 38(111), Pt. 2 (1973).

REFERENCES CONTINUED

ST-204 Stillwagon, R. E., "Economic Aspects of Electrically Driven Compressor Stations for Natural Gas Pipelines", Presented at the IEEE Pet. Chem. Ind. Conf., 20th Annual, Houston, Texas, Sept. 1973.

TH-058 "Three 50-kv Units are World's First", Railway Locomotives Cars 147(1), 26 (1973).

TI-025 Tillinghast, John, "The Electric Railroad - A New Partner for Surface Mining", Presented at the 3rd Energy Transportation Conference, 1973.

US-093 U. S. Dept. of the Interior, Final Environmental Statement for the Prototype Oil Shale Leasing Program, 6 Vols., Washington, D.C., 1973 (GPO).

US-109 U. S. Bureau of Mines, (Energy Research), Technology of Coal Conversion, Washington, D.C., 1973.

US-125 U. S. Dept. of Transportation, Federal Railroad Administration, Summary and Analysis of Accidents on Railroads in the United States, 1972, Accident Bull. No. 141, Washington, D.C., 1973.

US-130 U. S. Bureau of Mines, Crude Petroleum, Petroleum Products and Natural-Gas-Liquids, 1972, Final Summary, Mineral Industry Surveys, Annual Petroleum Statement, Washington, D.C., 1973.

US-154 U. S. Dept. of Commerce, Bureau of the Census, Statistical Abstract of the U. S. 1973, 94th Ed., Washington, D. C., 1973.

REFERENCES CONTINUED

US-164 Bureau of Reclamation, Upper Colorado Region, WESCO Gasification Project and Expansion of Navajo Mine by Utah International, Inc., San Juan County, New Mexico, Draft Environmental Statement, DES 74-107, Washington, D.C., 1974.

VA-093 Van Norman, Jerry L., "New Ideas Are Evolving in Compressor Station Piping Design", Pipeline Gas J., 1972 (Nov.), 26 (1972).

VO-025 Voogd, J. and Jack Tielrooy, "Improvements in Making Hydrogen", Hydrocarbon Proc. 46(9), 115 (1967).

WA-139 Wasp, E. J. and T. L. Thompson, "Slurry Pipelines - Energy Movers of the Future", Presented at the Interpipe '73 Conference, Houston, Texas, Nov. 1973, San Francisco, Bechtel, Inc., 1973.

WE-110 Wefers, H. J. and L. E. Ettlinger, "Modern Railroad Electrification", Mech. Eng. 1970 (Sept.), 39.

WE-116 Wefers, H. J. and L. E. Ettlinger, "Modern Railroad Electrification at Muskinghum", Presented at the ASME-IEEE Joint Railroad Conference, Philadelphia, Pa., April 1970, N.Y., ASME, 1970.

WH-036 Whittle, T. C., Private Communication, General Electric Co., Transportation Systems Div., 11 Sept. 1974.

APPENDIX D

DISPERSION MODEL DESCRIPTION

The purpose of this discussion is to give a brief outline of the dispersion model used to calculate the anticipated pollutant concentrations in the Chicago AQCR.

The model is similar to the Climatological Dispersion Model (CDM) recently developed at the National Environmental Research Center, Research Triangle Park, North Carolina. The CDM is a long-term average model which utilizes long-term meteorological data in conjunction with Gaussian dispersion using Pasquill-Gifford dispersion coefficients. This model is essentially an updated version of the well-known AQDM (Air Quality Display Model) developed under EPA auspices and both models share a common conceptual approach. The primary differences between the two models relate to calculation of plume rise for point sources, specification of mixing heights and wind profiles, and the treatment of the effects of area sources.

The average concentration $\overline{C}_A$ due to area sources at a particular receptor is given by

$$\overline{C}_A = \frac{16}{2\pi} \int_0^\infty \left[\sum_{k=1}^{16} q_k(\rho) \sum_{\ell=1}^{6} \sum_{m=1}^{6} \phi(k,\ell,m) \right.$$

$$\left. S\left(\rho, z; u\, P_{\ell,m}\right) \right] d\rho \qquad (1)$$

where

k = index identifying wind direction sector

$q_k(\rho) = \int Q(\rho,\varphi)d\varphi$ (k sector)

$Q(\rho,\varphi)$ = emission rate of the area source per unit area and unit time

ρ = distance from the receptor to an infintesimal area source

φ = angle relative to polar coordinates centered on the receptor

ℓ = index identifying the wind speed class

m = index identifying the class of the Pasquill stability category

$\Phi(k,\ell,m)$ = joint frequency function (generally for an annual period

$S(\rho,z;u_\ell,P_m)$ = dispersion function defined in Equations (3) and (4)

z = height of receptor above ground level

u_ℓ = representative wind speed

P_m = Pasquill stability category

For point sources, the average concentration $\overline{C}p$ due to N point sources is given by:

$$\overline{C}_p = \frac{16}{2\pi} \sum_{n=1}^{N} \sum_{\ell=1}^{6} \sum_{m=1}^{6} \frac{\phi(k_n, \ell, m)\ G_n\ S(\rho_n z; u_\ell, P_m)}{\rho_n} \qquad (2)$$

where k_n = wind sector appropriate to the nth point source

G_n = emission rate of the nth point source

ρ_n = distance from the receptor to the nth point source

If the receptor is presumed to be at ground level, that is, z = 0, then the functional form of $S(\rho, z; U_\ell, P_m)$ will be:

$$S(\rho, 0; U_\ell, P_m) = \frac{2}{\sqrt{2\pi} U_\ell \sigma_z(\rho)} \exp\left[-\frac{1}{2}\left(\frac{h}{\sigma_z(\rho)}\right)^2\right] \exp\left(\frac{-0.692\rho}{U_\ell T_{1/2}}\right) \qquad (3)$$

if $\sigma_z(\rho) \leq 0.8$ L and

$$S(\rho, 0; U_\ell, P_m) = \frac{1}{U_\ell L} \exp\left(\frac{-0.692\rho}{U_\ell T_{1/2}}\right) \qquad (4)$$

if $\sigma_z(\rho) > 0.8L$. New terms in Equations 3 and 4 are defined as follows:

$\sigma_z(\rho)$ = vertical dispersion function, i.e., the standard deviation of the pollution concentration in the vertical plane

nm, h = effective stack height of source distribution, i.e., the average height of area source emissions in the kth wind direction sector at radial distance ρ from the receptor

L = the afternoon mixing height

T1/2 = assumed half life of pollutant, hours

The possibility of pollutant removal by phisical of chemical processes is included in the program by the decay expression $\exp\left(\frac{-0.692\rho}{U_\ell T_{1/2}}\right)$.

The total concentration for the averaging period is the sum of concentrations of the point and area sources for that averaging period.

For point sources, the effective stack height, h, is the sum of the physical stack, h_o, and the plume rise, Δh:

$$h = h_o + \Delta h \tag{5}$$

The plume rise, Δh, is computed with formulas developed by Briggs (BR-102). For unstable and neutral conditions:

$$\Delta h = 1.6F^{1/3} \quad U^{-1} \rho^{2/3} \qquad \rho \leq 3.5X^* \tag{6}$$

and

$$\Delta h = 1.6F^{1/3} \quad U^{-1}(3.5X^*)^{2/3} \qquad \rho > 3.5X^* \tag{7}$$

$$X^* = 14F^{5/8} \qquad \text{if } F \leq 55$$

$$X^* = 34F^{0/5} \qquad \text{if } F > 55$$

$F = g V_s R_s^2 [(T_s - T_a)/T_s]$

g = acceleration due to gravity

V_s = average exit velocity of gases of plume

R_s = inner radius of stack

T_s = average temperature of gases of plume

T_a = ambient air temperature

U = wind speed

ρ = distance from source to receptor

For stable conditions

$$\Delta h = 2.9 \, (F/US)^{1/3} \qquad \rho > 2.4 \, Us^{-\frac{1}{2}} \tag{8}$$

(i.e., Equation (8) rather than Equation (7) is used for stable conditions)

where

$$s = \frac{g}{T_a} \frac{\partial \theta}{\partial z} \tag{9}$$

θ = ambient potential temperature

z = height.

The joint probability function $\emptyset(k_n, \ell, m)$ is obtained from historic meteorological data collected at meteorological stations near the site in question. Average ambient temperature and average daytime and nighttime mixing height for each site are obtained from an analysis of the meteorological data for the site.

APPENDIX E

SUPPORTING CALCULATIONS FOR THE COST COMPARISONS OF ALTERNATE ELECTRIC AND FOSSIL FUEL FIRED EQUIPMENT IN THE RESIDENTIAL, COMMERCIAL, AND INDUSTRIAL SECTORS

I. Residential Sector Capital and Operating Cost Calculations

A. Air Conditioner Capital Costs, 1974

central electric air conditioner
units shipped = 2.880×10^6 (EN-221)

installed value = $\$2,641.738 \times 10^6$

$$\text{capital cost} = \frac{\$2,641.738 \times 10^6}{2.880 \times 10^6} = \$917$$

central gas air conditioner
capital cost = $1,500 (AM-126)

B. Space Heater Capital Costs, 1974

central electric space heater
units shipped = 1.376×10^6 (EN-221)

installed value = $\$744.141 \times 10^6$

$$\text{capital cost} = \frac{\$744.141 \times 10^6}{1.376 \times 10^6} = \$541$$

central gas space heater
units shipped = 2.118×10^6 (EN-221)

installed value = $\$1,088.144 \times 10^6$

$$\text{capital cost} = \frac{1,088.144 \times 10^6}{2.118 \times 10^6} = \$514$$

central oil fired space heater
units shipped = $.825 \times 10^6$

installed value = 468.468×10^6

$$\text{capital cost} = \frac{\$468.468}{.825} = \$568$$

C. <u>Stove/Oven Capital Costs, 1974</u>

electric units shipped = 2.925×10^6 (TE-177)

value = $\$701.839 \times 10^6$

capital cost = 701.839/2.925 = $240

gas units shipped = 1.953×10^6 (TE-177)

value = $\$447.551 \times 10^6$

capital cost = 447.551/1.953 = $229

microwave units shipped = 675,000 (TE-177)

value = 247.725×10^6

capital cost = 247.725/.675 = $367

D. <u>Clothes Dryer Capital Costs, 1974</u>

electric units shipped = 2.841×10^6 (TE-177)

value = $\$514.221 \times 10^6$

capital cost = $514.221/2.841 = $181

gas units shipped = 739,000 (TE-177)

value = $155.190x10^6$

capital cost = $155.19/.739 = $210

E. Water Heater Capital Costs, 1974

electric units shipped = $2.505x10^6$ (TE-177)

value = $242.985x10^6$

capital cost = $242.985/2.505 = $97

gas units shipped = $2.56x10^6$ (TE-177)

value = $236.072x10^6$

capital cost = $236.072/2.56 = $92

F. Stove/Oven Capital Costs, 1972

electric units shipped = $3.232x10^6$ (TE-177)

value = $706.934x10^6$

capital cost = $706.934/3.232 = $219

gas units shipped = $2.661x10^6$ (TE-177)

value = $564.568x10^6$

capital cost = $564.568/2.661 = $212

microwave units shipped = 325,000

value = $130.0x10^6$

capital cost = $130/.325 = $400

G. Clothes Dryer Capital Costs, 1972

electric units shipped = $2.989x10^6$ (TE-177)

value = $505.141x10^6$

capital cost = $505.141/2.989 = $169

gas units shipped = 936,000

value = $183.456x10^6$

capital cost = $183.456/.936 = $196

H. Water Heater Capital Costs, 1972

electric units shipped = $2.265x10^6$ (TE-177)

value = $203.85x10^6$

capital cost = $203.85/2.265 = $90

gas units shipped = $3.163x10^6$

value = $268.855x10^6$

capital cost = $268.855/3.163 = $85

I. Air Conditioner Capital Costs, 1972

1974/1972 Cost Ratios (TE-177)

	Gas	Electric
water heater	1.082	1.078
stove/oven	1.080	1.096
dryer	1.071	1.071
refrigerator	-	1.093
room air conditioner	-	1.010
Avg.	1.078	1.070

1972 capital cost gas air conditioner = 1,500/1.078
= $1,390

1972 capital cost electric air conditioner
= 917/1.070 = $857

J. Space Heater Capital Costs, 1972

1972 capital cost gas space gas heater = 514/1.078
= $477

1972 capital cost electric space heater = 541/1.070
= $502

1972 capital cost oil space heater = 567/1.078 = $526

K. Central Electric Air Conditioner Operating Costs

Assuming 5 rooms/unit (US-189)

$$1974 \text{ cost} = \frac{1{,}389 \text{ kwhr}}{\text{room yr}} \times 5 \text{ rooms} \times \frac{\$.0282}{\text{kwhr}} = \$196/\text{yr}$$

(AI-018)

1972 cost = 1,389 x 5 x .0240 = $167/yr

L. Central Gas Air Conditioner Operating Costs

$$1974 \text{ cost} = 1{,}389 \times 5 \times \frac{50\%}{30\%} \times 3.413 \times 10^{-3} \frac{\text{mcf}}{\text{kwhr}} \times \frac{\$1.418}{\text{mcf}}$$

$$= \$56/\text{yr}$$

$$1972 \text{ cost} = \$56/\text{yr} \times \frac{\$1.186/\text{mcf}}{\$1.418/\text{mcf}} = \$47/\text{yr}$$

M. Central Gas Space Heater Operating Costs

energy requirement = 119.2 mcf/yr (AM-126)

$$1974 \text{ cost} = \frac{119.2 \text{ mcf}}{\text{yr}} \times \frac{\$1.418}{\text{mcf}} = \$169/\text{yr}$$

$$1972 \text{ cost} = 119.2 \times \$1.186/\text{mcf} = \$141/\text{yr}$$

N. Oil-Fired Space Heater Operating Costs

$$1974 \text{ cost} = \frac{1{,}192 \text{ therms}}{\text{yr}} \times \frac{60\%}{60\%} \times \frac{100{,}000 \text{ Btu}}{\text{therms}}$$

$$\times \frac{\text{gal}}{140{,}000 \text{ Btu}} \times \frac{\$.264}{\text{gal}} = \$225/\text{yr}$$

$$1972 \text{ cost} = \$225/\text{yr} \times \frac{\$.102/\text{gal}}{\$.264/\text{gal}} = \$86.9/\text{yr}$$

O. Central Electric Space Heater Operating Costs

$$1974 \text{ cost} = \frac{20{,}955 \text{ kwhr}}{\text{yr}} \times \frac{\$.0282}{\text{kwhr}} = \$591/\text{yr}$$

$$1972 \text{ cost} = 20{,}955 \times \frac{\$.0240}{\text{kwhr}} = \$503/\text{yr}$$

P. Stove Oven Operating Costs

$$1974 \text{ electric cost} = \frac{1{,}175 \text{ kwhr}}{\text{yr}} \times \frac{\$.0282}{\text{kwhr}} = \$33/\text{yr}$$

$$1974 \text{ microwave cost} = \frac{190 \text{ kwhr}}{\text{yr}} \times \frac{\$.0282}{\text{kwhr}} = \$5.4/\text{yr}$$

$$1974 \text{ gas cost} = 1{,}175 \times \frac{75\%}{37\%} \times 3.413 \times 10^{-3} \frac{\text{mcf}}{\text{kwhr}} \times \frac{\$1.418}{\text{mcf}}$$

$$= \$11.5/\text{yr} \approx \$12/\text{yr}$$

$$1972 \text{ electric cost} = 33/\text{yr} \times \frac{\$.0240/\text{kwhr}}{\$.0282/\text{kwhr}} = \$28/\text{yr}$$

$$1972 \text{ microwave cost} = \$5.4/\text{yr} \times \frac{.0240}{.0282} = \$4.6/\text{yr}$$

$$1972 \text{ gas cost} = \$11.5/\text{yr} \times \frac{1.186}{1.418} = \$9.6/\text{yr}$$

Q. Clothes Dryer Operating Costs

$$1974 \text{ electric cost} = 993 \frac{\text{kwhr}}{\text{yr}} \times \frac{\$.0282}{\text{kwhr}} = \$28/\text{yr}$$

$$1974 \text{ gas cost} = 993 \times \frac{55\%}{49\%} \times 3.413 \times 10^{-3} \frac{\text{mcf}}{\text{kwhr}} \times \$1.418/\text{mcf}$$

$$= \$5.5/\text{yr}$$

$$1972 \text{ electric cost} = 28 \times \frac{.0240}{.0282} = \$24/\text{yr}$$

$$1972 \text{ gas cost} = 5.5 \times \frac{1.186}{1.418} = \$4.6/\text{yr}$$

R. Water Heater Operating Costs

1974 electric cost = $4{,}219 \frac{\text{kwhr}}{\text{yr}} \times \$.0282/\text{kwhr} = \$119/\text{yr}$

1974 gas cost = $4{,}219 \times \frac{92\%}{60\%} \times 3.413 \times 10^{-3} \frac{\text{mcf}}{\text{kwhr}} \times \$1.418/\text{mcf}$

$= \$31/\text{yr}$

1972 electric cost = $\$119/\text{yr} \times \frac{.0240}{.0282} = \$101/\text{yr}$

1972 gas cost = $\$31/\text{yr} \times \frac{1.186}{1.418} = \$26/\text{yr}$

II. Residential Sector Present Cost Calculations

A. Base Case Calculations, 1972

20 yr lifetime, 8% interest, constant operating costs over equipment life

1. Air Conditioning, Electric

$P = \$857 + (P/A,\ 8\%,\ 20\ \text{yr})(\$167/\text{yr})$

$= 857 + (9.818)(167)$

$= \$2{,}497$

2. Air Conditioning, Gas

$P = \$1{,}390 + 9.818\ (\$47/\text{yr})$

$= \$1{,}851$

3. Dryer, Electric

$P = \$169 + 9.818\ (\$23.8/yr)$

$= \$403$

4. Dryer, Gas

$P = \$196 + 9.818\ (\$4.6/yr)$

$= \$241$

5. Stove/Oven, Electric

$P = \$219 + 9.818\ (\$28.2/yr)$

$= \$496$

6. Stove/Oven, Gas

$P = \$212 + 9.818\ (\$9.6/yr)$

$= \$307$

7. Stove/Oven, Microwave

$P = \$400 + 9.818\ (\$4.6/yr)$

$= \$445$

B. Base Case Calculations, 1974

1. Air Conditioning, Electric

$P = \$917 + 9.818\ (\$196/yr)$

$= \$2,841$

2. Air Conditioning, Gas

$P = \$1,500 + 9.818\ (\$56/yr) = \$2,050$

3. Dryer, Electric

$P = \$181 + 9.818\ (\$28/yr) = \$456$

4. Dryer, Gas

$P = \$210 + 9.818\ (\$5.5/yr) = \$264$

5. Stove/Oven, Electric

$P = \$240 + 9.818\ (\$33/yr) = \$565$

6. Stove/Oven, Gas

$P = \$229 + 9.818\ (\$11.5/yr) = \$342$

7. Stove/Oven, Microwave

$P = \$367 + 9.818\ (5.4/yr) = \$420$

C. Case 1, 1972

equipment life = 20 yr, interest rate = 8%

gas prices increase 9.87%/yr
electricity prices increases 8.75%/yr } 1972-74 average increases

1. Air Conditioning, Electric

$$P = \$857 + \$167/\text{yr}\left[\sum_{n=1}^{20} \frac{1}{(1+i)^n}(1+.0875)^{n-1}\right]$$

$$= 857 + 167 \sum_{n=1}^{20} \frac{1}{(1+i)^n} \frac{(1.0875)^n}{1.0875}$$

$$= 857 + \frac{167}{1.0875} \sum_{n=1}^{20} \left(\frac{1.0875}{1+i}\right)^n$$

$$= 857 + 154 \sum_{n=1}^{20} \left(\frac{1.0875}{1.08}\right)^n$$

$$= 857 + 154 \left\{\left[\frac{(1.006944)^{21}-1}{1.006944 - 1}\right] -1\right\}$$

$$= 857 + 154\ (21.52)$$

$$= \$4,162$$

2. Air Conditioning, Gas

$$P = \$1,390 + \frac{\$47/\text{yr}}{1.0987} \sum_{n=1}^{20} \left(\frac{1.0987}{1.08}\right)^n$$

$$= 1,390 + 42.8\left\{\left[\frac{(1.0173)^{21}-1}{1.0173 - 1}\right] -1\right\}$$

$$= 1,390 + 42.8\ (24.06)$$

$$= \$2,419$$

3. Dryer, Electric

$$P = \$169 + \frac{\$23.8}{1.0875}(21.52) = \$641$$

4. Dryer, Gas

$$P = \$196 + \frac{\$4.6}{1.0987}(24.06) = \$297$$

5. Stove/Oven, Electric

$$P = \$219 + \frac{\$28.2}{1.0875}(21.52) = \$777$$

6. Stove/Oven, Gas

$$P = \$212 + \frac{9.6}{1.0987}(24.06) = \$423$$

7. Stove/Oven, Microwave

$$P = \$400 + \frac{4.6}{1.0875}(21.52) = \$490$$

D. <u>Case 1, 1974</u>

1. Air Conditioner, Electric

$$P = \$917 + \frac{\$196}{1.0875}(21.52) = \$4,796$$

2. Air Conditioner, Gas

$$P = \$1,500 + \frac{\$56}{1.0987}(24.06) = \$2,726$$

3. Dryer, Electric

$$P = 181 + \frac{\$28}{1.0875}(21.52) = \$735$$

4. Dryer, Gas

$$P = \$210 + \frac{\$5.5}{1.0987}(24.06) = \$330$$

5. Stove/Oven, Electric

$$P = \$240 + \frac{\$33}{1.0875}(21.52) = \$896$$

6. Stove/Oven, Gas

$$P = \$229 + \frac{\$11.5}{1.0987}(24.06) = \$481$$

7. Stove/Oven, Microwave

$$P = \$367 + \frac{\$5.4}{1.0875}(21.52) = \$473$$

E. <u>Case 2, 1972</u>

equipment life = 20 yr, interest rate = 12%
gas prices increase 9.87%/yr
electricity prices increase 8.75%/yr

1. Air Conditioning, Electric

$$P = \$857 + \frac{\$167}{1.0875}\left[\sum_{n=1}^{20}\left(\frac{1.0875}{1.12}\right)^n\right]$$

$$= 857 + \frac{167}{1.0875}\left\{\left[\frac{(.971)^{21}-1}{.971 - 1}\right] -1\right\}$$

$$= 857 + \frac{167}{1.0875}(14.90)$$

$$= \$3,145$$

2. Air Conditioning, Gas

$$P = 1{,}390 + \frac{47}{1.0987}\left[\sum_{n=1}^{20}\left(\frac{1.0987}{1.12}\right)^{n}\right]$$

$$= 1{,}390 + \frac{47}{1.0987}\left\{\left[\frac{(.981)^{21}-1}{.981 - 1}\right] -1\right\}$$

$$= 1{,}390 + \frac{47}{1.0987}\ (16.45)$$

$$= \$2{,}094$$

3. Dryer, Electric

$$P = \$169 + \frac{\$23.8}{1.0875}\ (14.90) = \$495$$

4. Dryer, Gas

$$P = \$196 + \frac{\$4.6}{1.0987}\ (16.45) = \$265$$

5. Stove/Oven, Electric

$$P = \$219 + \frac{\$28}{1.0875}\ (14.90) = \$673$$

6. Stove/Oven, Gas

$$P = \$212 + \frac{\$9.6}{1.0987}\ (16.45) = \$356$$

7. Stove/Oven, Microwave

$$P = \$400 + \frac{4.6}{1.0875}\ (14.90) = \$462$$

F. Case 2, 1974

1. Air Conditioning, Electric

$$P = \$917 + \frac{\$196}{1.0875}(14.90) = \$3,602$$

2. Air Conditioning, Gas

$$P = \$1,500 + \frac{\$56}{1.0987}(16.45) = \$2,338$$

3. Dryer, Electric

$$P = \$181 + \frac{\$28}{1.0875}(14.90) = \$565$$

4. Dryer, Gas

$$P = \$210 + \frac{\$5.5}{1.0987}(16.45) = \$292$$

5. Stove/Oven, Electric

$$P = \$240 + \frac{\$33}{1.0875}(14.90) = \$694$$

6. Stove/Oven, Gas

$$P = \$229 + \frac{\$11.5}{1.0987}(16.45) = \$402$$

7. Stove/Oven, Microwave

$$P = \$367 + \frac{\$5.4}{1.0875}(14.90) = \$441$$

III. Commercial Sector Capital and Operating Cost Calculations

A. Stove Oven Capital Costs, 1974

1. Electric

units shipped = $.006 \times 10^6$

value = $\$3.823 \times 10^6$

$$\text{capital cost } \frac{\$3.823}{.006} = \$637$$

2. Gas

unit shipped = $.029 \times 10^6$

value = $\$17.663 \times 10^6$

$$\text{capital cost} = \frac{\$17.663}{.029} = \$609$$

B. Space Heating Operating Costs, 1972

1. Electric, 95% Efficient

$$\text{cost} = \frac{10^6 \text{Btu input}}{10^6 \text{Btu output}} \times \frac{2.93 \times 10^{-4} \text{kwhr}}{\text{Btu}} \times \frac{\$.0339}{\text{kwhr}}$$

$$= \$10.45/10^6 \text{ Btu}$$

2. Gas, 77% Efficient

$$\text{cost} = \frac{10^6 \text{Btu input}}{.77 \times 10^6 \text{Btu output}} \times \frac{1 \text{ mcf}}{10^6 \text{Btu}} \times \frac{\$.906}{\text{mcf}}$$

$$= \$1.18/10^6 \text{Btu}$$

3. Oil, 76% Efficient

$$\text{cost} = \frac{10^6\text{Btu input}}{.76\text{x}10^6\text{Btu output}} \text{ x } \frac{1\text{ gal}}{1.4\text{x}10^5\text{Btu}} \text{ x } \frac{\$.102}{\text{gal}}$$

$$= \$0.96/10^6\text{Btu}$$

C. <u>Water Heater Operating Costs, 1972</u>

1. Electric, 92% Efficient

$$\text{cost} = \frac{10^6\text{Btu}}{.92\text{x}10^6\text{Btu}} \text{ x } \frac{2.93\text{x}10^{-4}\text{kwhr}}{\text{Btu}} \text{ x } \frac{\$.0339}{\text{kwhr}}$$

$$= \$10.80/10^6\text{Btu}$$

2. Gas, 60% Efficient

$$\text{cost} = \frac{10^6\text{Btu}}{.60\text{x}10^6\text{Btu}} \text{ x } \frac{1\text{ mcf}}{10^6\text{Btu}} \text{ x } \frac{\$.906}{\text{mcf}} = \$1.51/10^6\text{Btu}$$

D. <u>Stove/Oven Operating Costs, 1972</u>

1. Electric, 75% Efficient

$$\text{cost} = \frac{10^6\text{Btu}}{.75\text{x}10^6\text{Btu}} \text{ x } \frac{2.93\text{x}10^{-4}\text{kwhr}}{\text{Btu}} \text{ x } \frac{\$.0339}{\text{kwhr}}$$

$$= \$13.25/10^6\text{Btu}$$

2. Gas, 37% efficient

$$\text{cost} = \frac{10^6\text{Btu}}{.37\text{x}10^6\text{Btu}} \text{ x } \frac{1\text{ mcf}}{10^6\text{Btu}} \text{ x } \frac{\$.906}{\text{mcf}} = \$2.45/10^6\text{Btu}$$

3. Microwave (assume electric use ratio of electric to microwave is same as residential)

$$\text{cost} = 13.25 \times \frac{190}{1,175} = \$2.14/10^6\text{Btu}$$

E. <u>Air Conditioning, 1972</u>

1. Electric, 50% Efficient

$$\text{cost} = \frac{10^6\text{Btu}}{.5\text{x}10^6\text{Btu}} \times \frac{2.93\text{x}10^{-4}\text{kwhr}}{\text{Btu}} \times \frac{\$.0339}{\text{kwhr}}$$

$$= \$19.87/10^6\text{Btu}$$

2. Gas, 30% Efficient

$$\text{cost} = \frac{10^6\text{Btu}}{.30\text{x}10^6\text{Btu}} \times \frac{1\ \text{mcf}}{10^6\text{Btu}} \times \frac{\$.906}{\text{mcf}} = \$3.02/10^6\text{Btu}$$

F. <u>Space Heating, 1974</u>

1. Electric

$$\text{cost} = 10.45 \times \frac{\$.0389/\text{kwhr}}{\$.0339/\text{kwhr}} = \$12.00/10^6\text{Btu}$$

2. Gas

$$\text{cost} = 1.18 \times \frac{\$1.105/\text{mcf}}{\$.906/\text{mcf}} = \$1.44/10^6\text{Btu}$$

3. Oil

$$\text{cost} = 0.96 \times \frac{\$.264/\text{gal}}{\$.102/\text{gal}} = \$2.48/10^6\text{Btu}$$

G. Water Heating, 1974

1. Electric

$$\text{cost} = 10.80 \times \frac{.0389}{.0339} = \$12.39/10^6\text{Btu}$$

2. Gas

$$\text{cost} = 1.51 \times \frac{1.105}{.906} = \$1.84/10^6\text{Btu}$$

H. Stove/Oven, 1974

1. Electric

$$\text{cost} = 13.25 \times \frac{.0389}{.0339} = \$15.20/10^6\text{Btu}$$

2. Gas

$$\text{cost} = 2.45 \times \frac{1.105}{.906} = \$2.99/10^6\text{Btu}$$

3. Microwave

$$\text{cost} = 2.14 \times \frac{.0389}{.0339} = \$2.46/10^6\text{Btu}$$

I. Air Conditioning, 1974

1. Electric

$$\text{cost} = 19.87 \times \frac{.0389}{.0339} = \$22.80/10^6\text{Btu}$$

2. Gas

$$\text{cost} = 3.02 \times \frac{1.105}{.906} = \$3.68/10^6\text{Btu}$$

IV. Industrial Operating Costs

A. Space Heating, 1972

1. Electric, 95% efficient

$$\text{cost} = \frac{10^6\text{Btu}}{.95\text{x}10^6\text{Btu}} \times \frac{\text{kwhr}}{3{,}413\ \text{Btu}} \times \frac{\$.0230}{\text{kwhr}} = \$7.09/10^6\text{Btu}$$

2. Gas, 77% Efficient

$$\text{cost} = \frac{10^6\text{Btu}}{.77\text{x}10^6\text{Btu}} \times \frac{1\ \text{mcf}}{10^6\text{Btu}} \times \frac{\$.449}{\text{mcf}} = \$0.58/10^6\text{Btu}$$

3. Oil, 76% Efficient

$$\text{cost} = \frac{10^6\text{Btu}}{.76\text{x}10^6\text{Btu}} \times \frac{1\ \text{gal}}{1.40\text{x}10^5\text{Btu}} \times \frac{\$.102}{\text{gal}} = \$0.96/10^6\text{Btu}$$

B. Space Heating, 1974

1. Electric

$$\text{cost} = 7.09 \times \frac{\$.0281/\text{kwhr}}{\$.0230/\text{kwhr}} = \$8.66/10^6\text{Btu}$$

2. Gas

$$\text{cost} = 0.58 \times \frac{\$.657/\text{mcf}}{\$.449/\text{mcf}} = \$0.85/10^6\text{Btu}$$

3. Oil

$$\text{cost} = 0.96 \times \frac{\$.264/\text{gal}}{\$.102/\text{gal}} = \$2.48/10^6\text{Btu}$$

C. Steel-Making Furnaces, 1972

1. Electric

$$\text{cost} = \frac{1.9\text{x}10^6\text{Btu}}{\text{ton}} \times \frac{\text{kwhr}}{3{,}413\ \text{Btu}} \times \frac{\$.0230}{\text{kwhr}} = \$12.80/\text{ton}$$

2. Gas

$$\text{cost} = \frac{4.3\text{x}10^6\text{Btu}}{\text{ton}} \times \frac{1\ \text{mcf}}{10^6\text{Btu}} \times \frac{\$.449}{\text{mcf}} = \$1.93/\text{ton}$$

3. Oil (low-sulfur residual)

$$\text{cost} = \frac{4.3\text{x}10^6\text{Btu}}{\text{ton}} \times \frac{1\ \text{gal}}{150{,}000\ \text{Btu}} \times \frac{\$.088}{\text{gal}} = \$2.52/\text{ton}$$

D. Steel-Making Furnaces, 1974

1. Electric

$$\text{cost} = 12.80 \times \frac{\$.0281/\text{kwhr}}{\$.0230/\text{kwhr}} = \$15.64/\text{ton}$$

2. Gas

$$\text{cost} = 1.93 \times \frac{\$.657/\text{mcf}}{\$.449/\text{mcf}} = \$2.82/\text{ton}$$

3. Oil

$$\text{cost} = 2.52 \times \frac{\$.281/\text{gal}}{\$.088/\text{gal}} = \$8.05/\text{ton}$$

E. <u>Heating and Annealing of Steel, 1972</u>

1. Electric

$$\text{cost} = \frac{2.1\text{x}10^6\text{Btu}}{\text{ton}} \times \frac{\text{kwhr}}{3{,}413\ \text{Btu}} \times \frac{\$.0230}{\text{kwhr}} = \$14.15/\text{ton}$$

2. Gas

$$\text{cost} = \frac{19\text{x}10^6\text{Btu}}{\text{ton}} \times \frac{1\ \text{mcf}}{10^6\text{Btu}} \times \frac{\$.449}{\text{mcf}} = \$8.53/\text{ton}$$

3. Oil

$$\text{cost} = \frac{19\text{x}10^6\text{Btu}}{\text{ton}} \times \frac{1\ \text{gal}}{150{,}000\ \text{Btu}} \times \frac{\$.088}{\text{gal}} = \$11.15/\text{ton}$$

F. <u>Heating and Annealing of Steel, 1974</u>

1. Electric

$$\text{cost} = 14.15 \times \frac{\$.0281/\text{kwhr}}{\$.0230/\text{kwhr}} = \$17.29/\text{ton}$$

2. Gas

$$\text{cost} = 8.53 \times \frac{\$.657/\text{mcf}}{\$.449/\text{mcf}} = \$12.48/\text{ton}$$

3. Oil

$$\text{cost} = 11.15 \times \frac{\$.281/\text{gal}}{\$.088/\text{gal}} = \$35.60/\text{ton}$$

G. Aluminum Melting, 1972

1. Electric

$$\text{cost} = \frac{2.1\text{x}10^6\text{Btu}}{\text{ton}} \text{ x } \frac{\text{kwhr}}{3{,}413 \text{ Btu}} \text{ x } \frac{\$.0230}{\text{kwhr}} = \$14.15/\text{ton}$$

2. Gas

$$\text{cost} = \frac{4.7\text{x}10^6\text{Btu}}{\text{ton}} \text{ x } \frac{1 \text{ mcf}}{10^6\text{Btu}} \text{ x } \frac{\$.449}{\text{mcf}} = \$2.11/\text{ton}$$

3. Oil

$$\text{cost} = \frac{4.7\text{x}10^6\text{Btu}}{\text{ton}} \text{ x } \frac{1 \text{ gal}}{150{,}000 \text{ Btu}} \text{ x } \frac{\$.088}{\text{gal}} = \$2.76/\text{ton}$$

H. Aluminum Melting, 1974

1. Electric

$$\text{cost} = 14.15 \text{ x } \frac{\$.0281/\text{kwhr}}{\$.0230/\text{kwhr}} = \$17.29/\text{ton}$$

2. Gas

$$\text{cost} = 2.11 \text{ x } \frac{\$.657/\text{mcf}}{\$.449/\text{mcf}} = \$3.09/\text{ton}$$

3. Oil

$$\text{cost} = 2.76 \text{ x } \frac{\$.281/\text{gal}}{\$.088/\text{gal}} = \$8.81/\text{ton}$$

I. Glass Melting, 1972

1. Electric

$$\text{cost} = \frac{2.9\text{x}10^6\text{Btu}}{\text{ton}} \text{ x } \frac{\text{kwhr}}{3{,}413 \text{ Btu}} \text{ x } \frac{\$.0230}{\text{kwhr}} = \$19.54/\text{ton}$$

2. Gas

$$\text{cost} = \frac{16\text{x}10^6\text{Btu}}{\text{ton}} \text{ x } \frac{\text{mcf}}{10^6\text{Btu}} \text{ x } \frac{\$.449}{\text{mcf}} = \$7.18/\text{ton}$$

3. Oil

$$\text{cost} = \frac{16\text{x}10^6\text{Btu}}{\text{ton}} \text{ x } \frac{\text{gal}}{150{,}000 \text{ Btu}} \text{ x } \frac{\$.088}{\text{gal}} = \$9.39/\text{ton}$$

J. Glass Melting, 1974

1. Electric

$$\text{cost} = 19.54 \text{ x } \frac{\$.0281/\text{kwhr}}{\$.0230/\text{kwhr}} = \$23.87/\text{ton}$$

2. Gas

$$\text{cost} = 7.18 \text{ x } \frac{\$.657/\text{mcf}}{\$.449/\text{mcf}} = \$10.51/\text{ton}$$

3. Oil

$$\text{cost} = 9.39 \text{ x } \frac{\$.281/\text{gal}}{\$.088/\text{gal}} = \$29.98/\text{ton}$$

K. Cooking, 1972

1. Electric

$$\text{cost} = \frac{10^6\text{Btu}}{.75\text{x}10^6\text{Btu}} \text{ x } \frac{\text{kwhr}}{3{,}413 \text{ Btu}} \text{ x } \frac{\$.0230}{\text{kwhr}} = \$8.99/10^6\text{Btu}$$

2. Gas

$$\text{cost} = \frac{10^6\text{Btu}}{37\text{x}10^6\text{Btu}} \text{ x } \frac{1 \text{ mcf}}{10^6\text{Btu}} \text{ x } \frac{\$.449}{\text{mcf}} = \$1.21/10^6\text{Btu}$$

3. Oil

$$\text{cost} = \frac{10^6\text{Btu}}{.76\text{x}10^6\text{Btu}} \text{ x } \frac{\text{gal}}{150{,}000 \text{ Btu}} \text{ x } \frac{\$.088}{\text{gal}} = \$0.77/10^6\text{Btu}$$

L. Cooking, 1974

1. Electric

$$\text{cost} = 8.99 \text{ x } \frac{\$.0281/\text{kwhr}}{\$.0230/\text{kwhr}} = \$10.98/10^6\text{Btu}$$

2. Gas

$$\text{cost} = 1.21 \text{ x } \frac{\$.657/\text{mcf}}{\$.449/\text{mcf}} = \$1.77/10^6\text{Btu}$$

3. Oil

$$\text{cost} = 0.77 \text{ x } \frac{\$.281/\text{gal}}{\$.088/\text{gal}} = \$2.46/10^6\text{Btu}$$

APPENDIX E - REFERENCES

AI-018 Air Conditioning Heating and Refrigeration News 27 January 1975.

AM-124 American Gas Association, Department of Statistics, 1972 Gas Facts, Arlington, VA (1973).

AM-125 American Gas Association, Department of Statistics, Private Communication (April 1975).

AM-126 American Gas Association, Private Communication (April 1975).

AN-094 Andrew, Glenn A., A Comparative Analysis of the Efficiencies of Electrical Equipment Versus Direct-Fired Fossil Fuel Equipment, Draft Interim Report, Contract No. 68-02-1319, Task 13, Austin, TX, Radian Corporation (April 1975).

EN-221 "Environmental Confort Appliances," Appliance Manuf. 1973 (December).

FE-090 Federal Power Commission, Typical Electric Bills, Washington, D.C. (December 1974).

HO-176 "How to Cut Fat Out of Your Home Energy Budget," Smithsonian (March 1974).

RA-157 Radian Corporation, Fuel Usage Assessment for EPA Energy End Use Study, Interim Report, Contract No. 68-02-1319, Task 13, Austin, TX (December 1974).

RE-123 "Refined-Products Prices," Oil Gas J. (17 July 1972).

RE-124 "Refined-Products Prices," Oil Gas J. (15 July 1974).

TE-177 "The Ten Year Tables: A Look at Product Sales Growth and Performance," Merchandising Wk. (24 February 1975).

US-187 United States Steel Corporation (USS), The Making, Shaping and Treating of Steel, Harold E. McGannon, ed., 8th ed., Pittsburgh, PA (1964).

US-189 U.S. Department of Commerce, Bureau of the Census, Detailed Housing Characteristics, U.S. Summary, Washington, D.C. (1972).

TECHNICAL REPORT DATA
(Please read Instructions on the reverse before completing)

1. REPORT NO. EPA-600/2-76-049b	2.	3. RECIPIENT'S ACCESSION NO.
4. TITLE AND SUBTITLE Electrical Energy as an Alternate to Clean Fuels for Stationary Sources; Volume II--Appendix		5. REPORT DATE March 1976
		6. PERFORMING ORGANIZATION CODE
7. AUTHOR(S) R. M. Wells and W. E. Corbett		8. PERFORMING ORGANIZATION REPORT NO.
9. PERFORMING ORGANIZATION NAME AND ADDRESS Radian Corporation 8500 Shoal Creek Boulevard (P.O. Box 9948) Austin, Texas 78766		10. PROGRAM ELEMENT NO. 1AB013; ROAP 21ADD-042
		11. CONTRACT/GRANT NO. 68-02-1319, Task 13
12. SPONSORING AGENCY NAME AND ADDRESS EPA, Office of Research and Development Industrial Environmental Research Laboratory Research Triangle Park, NC 27711		13. TYPE OF REPORT AND PERIOD COVERED Task Final; 6/74-10/75
		14. SPONSORING AGENCY CODE EPA-ORD

15. SUPPLEMENTARY NOTES Project officer for this report is Walter B. Steen, Ext 2825.

16. ABSTRACT The report gives results of an examination of technical and environmental incentives for increased electrification in stationary use sectors. It compares the impacts which result from the production and consumption of equivalent quantities of natural gas, fuel oil, and electricity. It also examines several alternative methods of producing each end-use fuel and considers technical and economic barriers to increased electrification. It concludes that incentives for increased electrification are associated with the potential of this technique to reduce fossil fuel demands per se since direct consumption of fossil fuels appears to be more attractive from an energy efficiency and an environmental impact viewpoint. Most of the natural gas and distillate fuel oil consumed in the U.S. is in the residential, commercial, and industrial sectors. Currently experienced shortages of these clean premium fuels are providing incentives for the development of new energy sources for these markets. Among apparent alternatives are increased exploration for new sources of oil and gas, and production of clean synthetic fuels from the more abundant (but less environmentally attractive) fossil fuels such as coal or oil shale. Increased use of electrical energy is another option for satisfying future stationary sector energy demands.

17. KEY WORDS AND DOCUMENT ANALYSIS

a. DESCRIPTORS		b. IDENTIFIERS/OPEN ENDED TERMS	c. COSATI Field/Group	
Air Pollution	Evaluation	Air Pollution Control	13B	14A
Energy	Coal	Stationary Sources		
Electricity	Oil Shale	Clean Fuels	20C	
Natural Gas		Electrical Energy	20D	
Fuel Oil				
Economics			05C	

18. DISTRIBUTION STATEMENT Unlimited	19. SECURITY CLASS (This Report) Unclassified	21. NO. OF PAGES 476
	20. SECURITY CLASS (This page) Unclassified	22. PRICE

EPA Form 2220-1 (9-73)