EPA-600/2-76-135b
May 1976

Environmental Protection Technology Series

DEVELOPMENT OF THE WESTVACO ACTIVATED CARBON PROCESS FOR SO_X RECOVERY AS ELEMENTAL SULFUR

Volume II – Appendix

Industrial Environmental Research Laboratory
Office of Research and Development
U.S. Environmental Protection Agency
Research Triangle Park, North Carolina 27711

RESEARCH REPORTING SERIES

Research reports of the Office of Research and Development, U.S. Environmental Protection Agency, have been grouped into five series. These five broad categories were established to facilitate further development and application of environmental technology. Elimination of traditional grouping was consciously planned to foster technology transfer and a maximum interface in related fields. The five series are:

1. Environmental Health Effects Research
2. Environmental Protection Technology
3. Ecological Research
4. Environmental Monitoring
5. Socioeconomic Environmental Studies

This report has been assigned to the ENVIRONMENTAL PROTECTION TECHNOLOGY series. This series describes research performed to develop and demonstrate instrumentation, equipment, and methodology to repair or prevent environmental degradation from point and non-point sources of pollution. This work provides the new or improved technology required for the control and treatment of pollution sources to meet environmental quality standards.

EPA REVIEW NOTICE

This report has been reviewed by the U.S. Environmental Protection Agency, and approved for publication. Approval does not signify that the contents necessarily reflect the views and policy of the Agency, nor does mention of trade names or commercial products constitute endorsement or recommendation for use.

This document is available to the public through the National Technical Information Service, Springfield, Virginia 22161.

EPA-600/2-76-135b
May 1976

DEVELOPMENT OF THE WESTVACO ACTIVATED CARBON PROCESS FOR SO_X RECOVERY AS ELEMENTAL SULFUR

VOLUME II--APPENDIX

by

G. Nelson Brown, Carl M. Reed, Albert J. Repik,
Robert L. Stallings, and Samuel L. Torrence

Westvaco
Box 5207
North Charleston, South Carolina 29406

Contract No. 68-02-0003
ROAP No. 21ACX-085
Program Element No. 1AB013

EPA Project Officer: Douglas A. Kemnitz

Industrial Environmental Research Laboratory
Office of Energy, Minerals, and Industry
Research Triangle Park, NC 27711

Prepared for

U.S. ENVIRONMENTAL PROTECTION AGENCY
Office of Research and Development
Washington, DC 20460

TABLE OF CONTENTS

Section		Page
A	DETAILED RAW DATA AND DATA ANALYSIS	1
A-1	Experimental Results of Gravimetric Flow Experiments	2
A-2	Computer Calculations - Sorption Rate Data and Models	26
A-3	Comparison of Westvaco Model to Experimental Sorption Data	52
A-4	SO_2 Sorption Rate Studies in 1" Diameter Fixed Bed	79
A-5	SO_2 Sorption Studies in 6" Diameter Fluid Adsorber	83
A-6	Multiple Regression Analyses	95
A-7	Comparison of Multiple Regressions to Differential Rate Data	99
A-8	Comparison of Multiple Regressions to 6" Diameter Fluidized Bed Runs	120
A-9	SO_2 Sorber Design - Effects on Size	142
A-10	Reaction Rate Studies for Sulfur Generation in 1" Diameter Fixed Bed	224
A-11	Sulfur Generation Experimental Data	238
A-12	Detailed Results of Integral Runs	247
A-13	Data from Solvent Extraction Experiments	378
A-14	Literature Survey for Recovery of Sulfur by Solvent Extraction	388
A-15	SO_2 Activity and Pore Volume Determination of Solvent Extracted Carbon	398
A-16	Experimental Results of Bench Scale Recycle Tests - Solvent Extraction versus Hydrogen Treatment	435
A-17	Post-Treatment Results of Ammonium Sulfide Solvent Extracted Carbon	471
A-18	Literature Study on Solvent Extraction	497
A-19	Detailed Data from Combined Sulfur Stripping/H_2S Generation Studies	506
A-20	Derivations	553

Section		Page
A-21	Sample Calculations for Integral Testing	605
A-22	Computer Programs	613
A-23	Detailed SO_2 Sorber Data Analysis	650
B	DETAILED PILOT PLANT INFORMATION	664
B-1	Analytical Techniques	665
B-2	Integral Pilot Plant Operation	697
B-3	Blueprints	706
B-4	Pilot Plant Operating Manual	726
B-5	Safety Program for Pilot Plant Operation of Westvaco Process	789
C	DETAILS OF PROCESS COMMERCIALIZATION	815
C-1	1,000 MW Utility Boiler Flue Gas Clean-up, Detailed Economic Evaluation	816
C-2	15 MW Detailed Equipment Design and Cost	825

APPENDIX

SECTION A

DETAILED RAW DATA AND DATA ANALYSIS

APPENDIX A-1

EXPERIMENTAL RESULTS OF THE GRAVIMETRIC FLOW EXPERIMENTS

GRAVIMETRIC FLOW EXPERIMENTS

Run:	138 - G	NO:	150 ppm	% H_2SO_4:	72.51
Dry Weight:	97.30 mg.	O_2:	0.7%	Correction:	0.4735
Deflection:	-10.80 mg.	H_2O:	10%	Date:	April 21, 1971
CO_2:	11.3%	t:	200°F		
SO_2:	2000 ppm	F_t:	1000 cc/min.		

Time minutes	Load mg. H_2SO_4/g. C
1	3.39
2	5.65
3	7.09
4	8.22
5	9.35
6	10.28
7	11.00
8	11.72
9	12.44
10	13.16
12	14.59
14	15.93
16	17.37
18	18.71
20	20.04
25	23.23
30	26.62
35	29.80
40	32.79
45	35.87
50	38.85
55	41.73
60	44.60
65	47.48
70	50.36
75	53.13
80	55.91
85	58.58
90	61.36
95	63.93
100	66.60
110	71.84
120	76.88
130	81.71
140	86.43
150	90.96
160	95.79
170	100.62
189	105.55
190	110.79
200	116.03
210	121.07
220	126.10
230	131.14
240	136.28
250	141.32
260	146.25
270	151.18
280	156.22
290	161.25
300	166.08
306	168.96

Mean Load mg. H_2SO_4/g. C	Rate mg. H_2SO_4/g. C/min.
2	3.3402
4	2.4152
6	1.6958
8	1.1614
10	0.8530
12	0.7297
14	0.6989
16	0.6783
18	0.6680
20	0.6578
25	0.6372
30	0.6269
35	0.6064
40	0.5858
45	0.5755
50	0.5653
55	0.5498
60	0.5396
65	0.5344
70	0.5242
75	0.5190
80	0.5139
85	0.5087
90	0.5087
95	0.5036
100	0.5036
110	0.4985
120	0.4933
130	0.4882
140	0.4882
150	0.4882
160	0.4830

GRAVIMETRIC FLOW EXPERIMENTS

Run:	139	NO:	150 ppm	% H_2SO_4:	73.58
Dry Weight:	101.30 mg.	O_2:	2.0%	Correction:	0.4805
Deflection:	-9.83 mg.	H_2O:	10.0%	Date:	April 22, 1971
CO_2:	11.3%	t:	200°F		
SO_2:	2000 ppm	F_t:	1000 cc/min.		

Time minutes	Load mg. H_2SO_4/g. C
1	9.28
2	11.65
3	13.33
4	14.61
5	15.89
6	17.08
7	18.26
8	19.15
9	20.14
10	21.13
12	23.10
14	25.17
16	27.15
18	29.22
20	31.29
25	36.43
30	41.46
35	46.50
40	51.33
45	56.17
50	61.01
55	65.75
60	70.58
65	75.22
70	79.86
75	84.70
80	89.34
85	93.98
90	98.72
95	103.26
100	107.90
110	116.98
120	126.26
130	135.44
140	144.52
150	153.50
160	162.29
170	170.48
180	178.58
190	186.57
200	194.18
210	201.88
220	209.28
230	216.78
240	224.09
250	231.29
260	238.30
270	245.21
280	252.02
290	258.64
300	264.46

Mean Load mg. H_2SO_4/g. C	Rate mg. H_2SO_4/g. C/min.
4	9.5953
6	6.9497
8	5.1135
10	2.8924
12	1.7473
14	1.4610
16	1.2833
18	1.1846
20	1.1155
25	1.0464
30	1.0365
35	1.0168
40	1.0069
45	0.9970
50	0.9872
55	0.9773
60	0.9674
65	0.9576
70	0.9526
75	0.9427
80	0.9378
85	0.9329
90	0.9279
95	0.9230
100	0.9181
110	0.9082
120	0.8983
130	0.8885
140	0.8786
150	0.8638
160	0.8490
170	0.8342
180	0.8193
190	0.7996
200	0.7848
220	0.7453
240	0.7108
260	0.6663

GRAVIMETRIC FLOW EXPERIMENTS

Run:	140	NO:	150 ppm	% H_2SO_4:	72.91
Dry Weight:	99.86 mg.	O_2:	2.0%	Correction:	0.4761
Deflection:	-9.78 mg.	H_2O:	10.0%	Date:	April 23, 1971
CO_2:	11.3%	t:	200°F		
SO_2:	2500 ppm	F_t:	1000 cc/min.		

Time minutes	Load mg. H_2SO_4/g. C
1	6.91
2	9.11
3	11.02
4	12.42
5	13.92
6	15.22
7	16.52
8	17.82
9	19.03
10	20.23
12	22.63
14	25.14
16	27.54
18	29.84
20	32.04
25	37.65
30	43.16
35	48.47
40	53.68
45	58.88
50	64.09
55	69.20
60	74.20
65	79.31
70	84.42
75	89.33
80	94.23
85	99.34
90	104.45
95	109.25
100	114.06
110	123.77
120	133.29
130	142.60
140	151.71
150	160.73
160	169.34
170	177.65
180	185.66
190	193.47
200	201.38
210	209.29
220	216.90
230	225.72
240	233.83
246	238.03

Mean Load mg. H_2SO_4/g. C	Rate mg. H_2SO_4/g. C/min.
4	6.2588
6	4.5063
8	2.1330
10	1.7725
12	1.5522
14	1.4070
16	1.3219
18	1.2568
20	1.2217
25	1.1566
30	1.1316
35	1.1166
40	1.1015
45	1.0865
50	1.0765
55	1.0665
60	1.0565
65	1.0465
70	1.0365
75	1.0314
80	1.0214
85	1.0114
90	1.0064
95	0.9964
100	0.9914
110	0.9764
120	0.9563
130	0.9463
140	0.9363
150	0.9213
160	0.9063
170	0.8862
180	0.8712
190	0.8512
200	0.8362
220	0.7961
240	0.7561

GRAVIMETRIC FLOW EXPERIMENTS

Run:	141	NO:	150 ppm	% H_2SO_4:	74.01
Dry Weight:	100.50 mg.	O_2:	2.0%	Correction:	0.4834
Deflection:	-11.35 mg.	H_2O:	10.0%	Date:	April 26, 1971
CO_2:	11.3%	t:	200°F		
SO_2:	1500 ppm	F_t:	1000 cc/min.		

Time minutes	Load mg. H_2SO_4/g. C
1	6.07
2	8.36
3	9.75
4	10.85
5	11.94
6	12.94
7	13.83
8	14.83
9	15.82
10	16.82
12	18.81
14	20.80
16	22.79
18	24.78
20	26.77
25	31.64
30	36.52
35	41.39
40	45.97
45	50.35
50	54.73
55	59.00
60	63.18
65	67.46
70	71.64
75	75.62
80	79.70
85	83.78
90	87.96
95	92.04
100	96.12
110	104.08
120	111.94
130	119.70
140	127.36
150	134.83
160	142.69
170	150.25
180	157.31
190	164.68
200	171.74
210	178.61
220	185.37
230	192.24
240	199.00
250	205.47
260	211.64
270	217.61
280	223.38
290	228.96
300	234.33
310	239.10
320	243.98
330	248.46
340	253.23
350	257.91
360	262.29
366	264.78

Mean Load mg. H_2SO_4/g. C	Rate mg. H_2SO_4/g. C/min.
2	6.9154
4	5.7015
6	3.1343
8	1.5423
10	1.2637
12	1.1294
14	1.0597
16	1.0149
18	0.9950
20	0.9800
25	0.9751
30	0.9602
35	0.9502
40	0.9403
45	0.9254
50	0.9154
55	0.9055
60	0.8955
65	0.8856
70	0.8756
75	0.8706
80	0.8657
85	0.8557
90	0.8458
95	0.8408
100	0.8308
110	0.8159
120	0.8010
130	0.7861
140	0.7662
150	0.7463
160	0.7214
170	0.7015
180	0.6766
190	0.6517
200	0.6269
220	0.5721
240	0.5224
260	0.4627

GRAVIMETRIC FLOW EXPERIMENTS

Run:	142	NO:	150 ppm	% H_2SO_4:	71.88
Dry Weight:	99.18 mg.	O_2:	2.0%	Correction:	0.4694
Deflection:	-11.64 mg.	H_2O:	10.0%	Date:	April 27, 1971
CO_2:	11.3%	t:	200°F		
SO_2:	1000 ppm	Ft:	1000 cc/min.		

Time minutes	Load mg. H_2SO_4/g. C
1	6.25
2	7.66
3	9.07
4	10.18
5	11.39
6	12.60
7	13.61
8	14.62
9	15.63
10	16.54
12	18.25
14	19.96
16	21.78
18	23.59
20	25.41
25	29.74
30	34.08
35	38.31
40	42.75
45	46.98
50	51.02
55	55.05
60	59.08
65	63.12
70	67.05
75	71.08
80	74.71
85	78.34
90	82.17
95	85.80
100	89.53
110	96.69
120	104.36
130	112.12
140	119.78
150	127.24
160	134.70
170	142.06
180	149.22
190	156.48
200	163.44
210	170.30
220	176.95
230	183.10
240	189.66
250	196.01
260	202.16
270	208.11
280	214.16
290	220.00
300	225.45
310	230.59
312	231.50

Mean Load mg. H_2SO_4/g. C	Rate mg. H_2SO_4/g. C/min.
2	7.0075
4	5.1220
6	2.9744
8	1.3410
10	1.1595
12	1.0536
14	0.9831
16	0.9377
18	0.9125
20	0.9074
25	0.8923
30	0.8822
35	0.8671
40	0.8570
45	0.8469
50	0.8369
55	0.8268
60	0.8167
65	0.8066
70	0.8016
75	0.7915
80	0.7814
85	0.7764
90	0.7663
95	0.7562
100	0.7512
110	0.7360
120	0.7209
130	0.7058
140	0.6907
150	0.6755
160	0.6604
170	0.6453
180	0.6251
190	0.6050
200	0.5848
220	0.5445
240	0.5041

GRAVIMETRIC FLOW EXPERIMENTS

Run:	143	NO:	150 ppm	% H_2SO_4:	72.45
Dry Weight:	100.02 mg.	O_2:	2.0%	Correction:	0.4732
Deflection:	-12.38	H_2O:	10.0%	Date:	April 28, 1971
CO_2:	11.3%	t:	200°F		
SO_2:	500 ppm	F_t:	1000 cc/min.		

Time minutes	Load mg. H_2SO_4/g. C
1	4.50
2	6.10
3	7.40
4	8.50
5	9.50
6	10.50
7	11.40
8	12.00
9	12.90
10	13.60
12	15.00
14	16.50
16	18.00
18	19.40
20	20.70
25	24.00
30	27.09
35	30.29
40	33.49
45	36.59
50	39.59
55	42.49
60	45.39
65	48.39
70	51.19
75	53.99
80	56.59
85	59.59
90	62.49
95	65.39
100	68.09
110	73.49
120	78.88
130	84.18
140	89.48
150	94.68
160	100.08
170	105.78
180	111.18
190	116.68
200	122.08
210	127.37
220	132.47
230	137.87
240	142.97
250	148.17
260	153.47
270	158.77
280	163.97
290	169.07
300	173.77
310	177.86
320	182.26
330	186.46
340	190.66
350	194.96
360	198.76
370	203.56
380	208.16
390	212.66
400	217.06
410	221.56
420	225.75

Mean Load mg. H_2SO_4/g. C	Rate mg. H_2SO_4/g. C/min.
2	4.6491
4	2.9794
6	1.4497
8	1.1498
10	0.9648
12	0.8498
14	0.7698
16	0.7199
18	0.6849
20	0.6649
25	0.6549
30	0.6399
35	0.6299
40	0.6249
45	0.6149
50	0.6049
55	0.5999
60	0.5949
65	0.5849
70	0.5799
75	0.5749
80	0.5699
85	0.5649
90	0.5599
95	0.5549
100	0.5499
110	0.5449
120	0.5349
130	0.5249
140	0.5149
150	0.5049
160	0.4949
170	0.4799
180	0.4699
190	0.4599
200	0.4449
220	0.4149

GRAVIMETRIC FLOW EXPERIMENTS

Run:	144 - G	NO:	150 ppm	% H_2SO_4:	73.31
Dry Weight:	98.68 mg.	O_2:	3.5%	Correction:	0.4788
Deflection:	-10.07 mg.	H_2O:	10.0%	Date:	April 29, 1971
CO_2:	11.3%	t:	200°F		
SO_2:	2000 ppm	F_t:	1000 cc/min.		

Time minutes	Load mg. H_2SO_4/g. C
1	7.60
2	10.03
3	12.16
4	14.09
5	15.91
6	17.73
7	19.36
8	20.98
9	22.50
10	24.12
12	27.16
14	30.20
16	33.14
18	36.08
20	38.91
25	46.01
30	53.10
35	60.09
40	67.09
45	73.98
50	80.97
55	87.86
60	94.65
65	101.34
70	108.23
75	115.02
80	122.11
85	129.00
90	135.79
95	142.48
100	149.07
110	162.04
120	174.40
130	186.46
140	198.52
150	209.97
160	221.02
170	231.96
180	242.30
190	252.23
200	261.96
210	271.08
220	279.89
230	288.61
240	297.02

Mean Load mg. H_2SO_4/g. C	Rate mg. H_2SO_4/g. C/min.
4	7.2963
6	5.1176
8	3.4455
10	2.1078
12	1.9457
14	1.8494
16	1.7734
18	1.7075
20	1.6417
25	1.5505
30	1.4998
35	1.4745
40	1.4593
45	1.4491
50	1.4390
55	1.4289
60	1.4187
65	1.4086
70	1.3985
75	1.3934
80	1.3883
85	1.3833
90	1.3731
95	1.3681
100	1.3630
110	1.3529
120	1.3427
130	1.3326
140	1.3174
150	1.2971
160	1.2819
170	1.2566
180	1.2262
190	1.1958
200	1.1654
220	1.0995
240	1.0336
260	0.9627
280	0.8918

GRAVIMETRIC FLOW EXPERIMENTS

Run:	145 - G	NO:	150 ppm	% H_2SO_4:	72.61
Dry Weight:	100.90 mg.	O_2:	2.0%	Correction:	0.4742
Deflection:	-2.31 mg.	H_2O:	10.0%	Date:	April 30, 1971
SO_2:	2000 ppm	t:	200°F		
		F_t:	1000 cc/min.		

Time minutes	Load mg. H_2SO_4/g. C
1	8.92
2	11.40
3	12.98
4	14.47
5	15.86
6	17.24
7	18.53
8	19.92
9	21.31
10	22.70
12	25.27
14	27.85
16	30.33
18	33.00
20	35.48
25	41.13
30	46.78
35	52.43
40	57.88
45	63.43
50	68.78
55	74.23
60	79.68
65	84.94
70	90.19
75	95.34
80	100.59
85	105.65
90	110.80
95	115.76
100	120.91
110	130.92
120	140.63
130	150.05
140	159.27
150	168.29
160	177.01
170	185.53
180	194.15
190	202.48
200	210.51
210	217.84
220	224.98
230	232.31
240	238.85

Mean Load mg. H_2SO_4/g. C	Rate mg. H_2SO_4/g. C/min.
4	8.9197
6	7.0862
8	5.2032
10	3.6670
12	2.0317
14	1.4668
16	1.4073
18	1.3677
20	1.3380
25	1.2834
30	1.2438
35	1.2141
40	1.1893
45	1.1645
50	1.1447
55	1.1298
60	1.1150
65	1.1001
70	1.0902
75	1.0803
80	1.0704
85	1.0605
90	1.0505
95	1.0406
100	1.0357
110	1.0208
120	1.0010
130	0.9812
140	0.9613
150	0.9316
160	0.9118
170	0.8821
180	0.8573
190	0.8276
200	0.7978
220	0.7384
240	0.6739

GRAVIMETRIC FLOW EXPERIMENTS

Run:	148 - G	NO:	150 ppm	% H_2SO_4:	57.18
Dry Weight:	100.94 mg.	O_2:	2.0%	Correction:	0.3734
Deflection:	-9.02 mg.	H_2O:	10.0%	Date:	May 7, 1971
CO_2:	11.3%	t:	150°F		
SO_2:	2500 ppm	F_t:	1000 cc/min.		

Time minutes	Load mg. H_2SO_4/g. C
1	26.25
2	36.95
3	44.09
4	50.53
5	56.07
6	61.72
7	66.48
8	71.23
9	75.69
10	80.15
12	88.07
14	95.80
16	103.53
18	110.86
20	117.79
25	133.94
30	148.70
35	162.47
40	176.02
45	188.83
50	200.52
55	211.12
60	221.02
65	229.54
70	237.07
75	244.11
80	250.94
85	257.58
90	264.22
95	270.85
100	277.29
110	290.07
120	301.76
130	312.17
140	321.28
150	329.80
160	338.02
170	346.05
180	353.68
190	360.11
200	366.55
210	372.70
220	378.64
230	384.29
240	389.14

Mean Load mg. H_2SO_4/g. C	Rate mg. H_2SO_4/g. C/min.
4	37.9433
6	34.9713
8	32.2469
10	29.8197
12	27.4916
14	25.3121
16	23.2812
18	21.3989
20	19.6156
25	15.3061
30	11.7396
35	8.9657
40	7.2816
45	6.6475
50	6.1423
55	5.6965
60	5.3002
65	4.9534
70	4.7058
75	4.4977
80	4.3293
85	4.1708
90	4.0222
95	3.8934
100	3.7745
110	3.5566
120	3.3386
130	3.1405
140	2.9622
150	2.7937
160	2.6352
170	2.4866
180	2.3281
190	2.1785
200	2.0408
220	1.7832
240	1.5554
260	1.3572
280	1.1888
300	1.0402
320	0.9015
340	0.7628
360	0.6439
380	0.5350

GRAVIMETRIC FLOW EXPERIMENTS

Run:	149 - G	NO:	150 ppm	% H_2SO_4:	56.86
Dry Weight:	105.38 mg.	O_2:	2.0%	Correction:	0.3713
Deflection:	-10.58 mg.	H_2O:	10.0%	Date:	May 10, 1971
CO_2:	11.3%	t:	150°F		
SO_2:	1500 ppm	F_t:	1000 cc/min.		

Time minutes	Load mg. H_2SO_4/g. C
1	24.10
2	34.07
3	40.71
4	46.02
5	50.67
6	55.04
7	58.74
8	62.26
9	65.57
10	68.80
12	74.97
14	81.04
16	86.73
18	92.33
20	98.03
25	112.36
30	126.21
35	138.64
40	150.31
45	161.32
50	171.95
55	182.29
60	192.16
65	201.46
70	210.48
75	218.92
80	226.80
85	234.39
90	241.41
95	248.05
100	254.22
110	266.18
120	276.81
130	286.68
140	296.17
150	305.37
160	313.53
170	320.74
180	327.67
190	334.03
200	339.91
210	345.61
220	351.11
230	356.33
240	361.17

Mean Load mg. H_2SO_4/g. C	Rate mg. H_2SO_4/g. C/min.
10	26.5705
12	24.1032
14	21.8258
16	19.7381
18	17.9351
20	16.2744
25	12.5261
30	9.6318
35	7.4492
40	6.1207
45	5.1243
50	4.5549
55	3.8622
60	3.5586
65	3.3488
70	3.2027
75	3.0888
80	3.0129
85	2.9512
90	2.8895
95	2.8326
100	2.7757
110	2.6665
120	2.5622
130	2.4673
140	2.3771
150	2.2965
160	2.2016
170	2.1067
180	2.0118
190	1.9121
200	1.8077
220	1.5942
240	1.3855
260	1.1909
280	1.0154
300	0.8541
320	0.7117
340	0.5883
360	0.4887

GRAVIMETRIC FLOW EXPERIMENTS

Run:	150 - G	NO:	150 ppm	% H_2SO_4:	53.33
Dry Weight:	105.66 mg.	O_2:	2.0%	Correction:	0.3482
Deflection:	-11.50 mg.	H_2O:	10.0%	Date:	May 11, 1971
CO_2:	11.3%	t:	150°F		
SO_2:	500 ppm	F_t:	1000 cc/min.		

Time minutes	Load mg. H_2SO_4/g. C
1	22.43
2	29.34
3	33.50
4	37.01
5	40.22
6	42.97
7	45.33
8	47.51
9	49.69
10	51.68
12	55.74
14	59.53
16	63.13
18	67.01
20	70.89
25	80.54
30	90.48
35	99.75
40	109.12
45	118.40
50	127.67
55	136.66
60	145.37
65	153.98
70	161.93
75	169.60
80	177.17
85	184.46
90	191.56
95	198.37
100	205.09
110	218.44
120	231.40
130	243.61
140	254.31
150	264.05
160	273.33
170	282.23
180	290.93
190	299.36
200	307.50
210	314.78
220	321.79
230	327.84
240	332.95

Mean Load mg. H_2SO_4/g. C	Rate mg. H_2SO_4/g. C/min.
8	30.3805
10	24.7965
12	21.0581
14	17.9349
16	15.2849
18	13.0134
20	11.0733
25	7.3822
30	5.0161
35	3.5018
40	2.7447
45	2.2714
50	2.0963
55	1.9544
60	1.8976
65	1.8739
70	1.8455
75	1.8361
80	1.8171
85	1.7982
90	1.7793
95	1.7651
100	1.7462
110	1.7083
120	1.6846
130	1.6373
140	1.5947
150	1.5569
160	1.5190
170	1.4717
180	1.4291
190	1.3913
200	1.3439
220	1.2493
240	1.1546
260	1.0411
280	0.9275
300	0.7855
320	0.6388
340	0.4921

GRAVIMETRIC FLOW EXPERIMENTS

Run:	151 - G	NO:	150 ppm	% H_2SO_4:	81.86
Dry Weight:	101.36 mg.	O_2:	2.0%	Correction:	0.5346
Deflection:	-11.68 mg.	H_2O:	10.0%	Date:	May 12, 1971
CO_2:	11.3%	t:	300°F		
SO_2:	2500 ppm	F_t:	1000 cc/min.		

Time minutes	Load mg. H_2SO_4/g. C
1	3.55
2	5.82
3	7.40
4	8.88
5	10.26
6	11.35
7	12.43
8	13.42
9	14.31
10	15.19
12	16.77
14	18.35
16	19.83
18	21.21
20	22.59
25	26.05
30	29.20
35	32.16
40	35.22
45	38.18
50	41.04
55	44.00
60	46.86
65	49.72
70	52.58
75	55.35
80	58.11
85	60.87
90	63.73
95	66.50
100	69.16
110	74.59
120	80.01
130	85.24
140	90.37
150	95.50
160	100.63
170	105.47
180	109.91
190	114.34
200	118.49
210	122.93
220	127.17
230	131.12
240	134.96
250	138.61
260	142.27
270	145.92
280	149.37
290	152.92
300	156.37
310	160.12
320	163.77
330	167.32
340	170.78
350	174.03
357	176.20

Mean Load mg. H_2SO_4/g. C	Rate mg. H_2SO_4/g. C/min.
2	3.5221
4	2.5355
6	1.7856
8	1.3319
10	1.1247
12	0.9866
14	0.8879
16	0.8139
18	0.7597
20	0.7202
25	0.6511
30	0.6166
35	0.5919
40	0.5821
45	0.5722
50	0.5673
55	0.5624
60	0.5574
65	0.5476
70	0.5426
75	0.5328
80	0.5229
85	0.5130
90	0.5032
95	0.4982
100	0.4834
110	0.4637
120	0.4440
130	0.4242
140	0.4045
150	0.3798
160	0.3552
170	0.3256
180	0.3009

GRAVIMETRIC FLOW EXPERIMENTS

Run:	152 - G	NO:	150 ppm	% H_2SO_4:	82.66
Dry Weight:	105.94 mg.	O_2:	2.0%	Correction:	0.5398
Deflection:	-12.67 mg.	H_2O:	10.0%	Date:	May 14, 1971
CO_2:	11.3%	t:	300°F		
SO_2:	1500 ppm	F_t:	1000 cc/min.		

Time minutes	Load mg. H_2SO_4/g. C
1	1.32
2	2.27
3	3.02
4	3.87
5	4.63
6	5.29
7	5.95
8	6.51
9	7.17
10	7.83
12	9.06
14	10.19
16	11.33
18	12.37
20	13.50
25	16.05
30	18.50
35	20.77
40	23.13
45	25.39
50	27.75
55	30.02
60	32.19
65	34.36
70	36.44
75	38.32
80	40.31
85	42.19
90	44.08
95	45.88
100	47.67
110	51.16
120	54.56
130	57.67
140	60.79
150	63.72
160	66.74
170	69.85
180	72.78
190	75.61
200	78.72
210	81.74
220	84.58
230	87.60
240	90.52
250	93.35
260	96.00
270	98.36
280	100.72
290	102.98
300	105.44
310	108.08
320	110.44
330	112.80
340	115.16
350	117.61
360	119.78
370	122.05
380	124.22
390	126.39
400	128.56
420	132.81
440	136.87
460	141.02
480	145.18
500	149.05
520	152.92
540	156.88
560	160.56
580	164.24
600	167.64

Mean Load mg. H_2SO_4/g. C	Rate mg. H_2SO_4/g. C/min.
2	0.8873
4	0.7363
6	0.6796
8	0.6136
10	0.5758
12	0.5475
14	0.5192
16	0.6003
18	0.4861
20	0.4720
25	0.4436
30	0.4200
35	0.3965
40	0.3776
45	0.3634
50	0.3493
55	0.3304
60	0.3162
65	0.3068
70	0.2973
75	0.2879
80	0.2785
85	0.2690
90	0.2643
95	0.2549
100	0.2454
110	0.2360
120	0.2265
130	0.2171
140	0.2077
150	0.1935
160	0.1841

GRAVIMETRIC FLOW EXPERIMENTS

Run:	153 - G	NO:	150 ppm	% H_2SO_4:	61.24
Dry Weight:	103.18 mg.	O_2:	2.0%	Correction:	0.3999
Deflection:	-8.23 mg.	H_2O:	10.0%	Date:	May 18, 1971
	-8.50 mg.	t:	150°F		
CO_2:	11.3%	F_t:	1000 cc/min.		
SO_2:	2500 ppm				

Time minutes	Load mg. H_2SO_4/g. C
1	25.10
2	32.86
3	37.89
4	42.55
5	46.62
6	50.01
7	53.60
8	57.08
9	60.28
10	63.58
11	66.87
12	69.88
13	72.79
14	76.08
15	77.99
16	81.99
17	85.00
18	88.00
19	91.01
20	93.91
22	99.73
24	105.25
26	110.87
28	116.59
30	122.12
35	135.39
40	148.19
45	160.50
50	172.13
55	183.76
60	194.90
65	205.27
70	215.45
75	225.24
80	234.54
85	243.26
90	251.60
95	259.45
100	266.91
110	281.06
120	294.44
130	306.55
140	317.60
150	327.39
160	337.18
170	346.48
180	354.91
190	362.47
200	369.45
210	376.33
220	382.73
230	388.64
240	394.46
250	399.79
260	404.83
270	409.48
280	413.94
290	418.49
300	422.76

Mean Load mg. H_2SO_4/g. C	Rate mg. H_2SO_4/g. C/min.
10	29.0754
12	26.0709
14	23.0665
16	20.4497
18	17.9298
20	15.7007
25	10.9517
30	7.1719
35	5.5728
40	4.5067
45	4.0124
50	3.6763
55	3.3727
60	3.2855
65	3.2080
70	3.1401
75	3.0771
80	3.0238
85	2.9705
90	2.9269
95	2.8785
100	2.8397
110	2.7719
120	2.7040
130	2.6362
140	2.5683
150	2.4908
160	2.4230
170	2.3454
180	2.2582
190	2.1807
200	2.1031
220	1.9287
240	1.7639
260	1.5895
280	1.4150
300	1.2309
320	1.0467
340	0.8820
360	0.7463
380	0.6203
400	0.5330
420	0.4652
440	0.4071
460	0.3683
480	0.3392
500	0.3101
520	0.2714
540	0.2520
560	0.2326

* Run 153 - G continued on next page.

(CONTINUED FROM PREVIOUS PAGE)

Run:	153 - G	NO:	150 ppm	% H_2SO_4:	61.24
Dry Weight:	103. 18 mg.	O_2:	2.0%	Correction:	0.3999
Deflection:	-8.23 mg.	H_2O:	10.0%	Date:	May 18, 1971
	-8.50 mg.	t:	150°F		
CO_2	11.3%	F_t:	1000 cc/min.		
SO_2	2500 ppm				

Time Minutes	Load mg. H_2SO_4/g. C
310	427.02
320	431.29
330	435.26
340	439.23
350	443.01
360	446.60
370	450.47
380	454.16
390	458.03
400	461.91
410	465.69
420	469.28
430	473.06
440	476.74
450	480.42
460	484.01
470	487.50
480	490.89
490	494.18
500	497.29
510	500.29
520	503.20
530	506.11
540	508.82
550	511.73
560	514.54
570	517.25
580	519.97
590	522.58
600	525.20
610	527.82
620	530.43
630	532.86
640	536.34
650	539.45
660	542.64
670	545.65
680	548.46
690	551.17
700	553.89
710	556.50
720	559.12
730	561.45
740	563.68
750	565.61

GRAVIMETRIC FLOW EXPERIMENTS

Run:	157 - G	NO:	150 ppm	% H_2SO_4:	67.91
Dry Weight:	104.66 mg.	O_2:	2.0%	Correction:	0.4435
Deflection:	-10.56 mg.	H_2O:	15.0%	Date:	May 31, 1971
CO_2:	11.3%	t:	200°F		
SO_2:	2000 ppm	F_t:	1000 cc/min.		

Time minutes	Load mg. H_2SO_4/g. C
1	7.93
2	10.13
3	12.04
4	13.85
5	15.77
6	17.39
7	19.11
8	20.64
9	22.36
10	23.98
12	27.33
14	30.48
16	33.73
18	36.98
20	40.13
25	47.96
30	55.80
35	63.54
40	71.47
45	79.02
50	86.28
60	99.08
70	110.93
80	122.59
90	134.15
100	145.61
110	157.18
120	168.26
130	179.06
140	189.66
150	199.98
160	210.11
170	219.85
180	229.51
190	238.87
200	248.33
210	257.60
220	266.67
230	275.37
240	283.87
250	291.99
260	299.92
270	306.99
280	313.97
290	320.56
300	326.96

Mean Load mg. H_2SO_4/g. C	Rate mg. H_2SO_4/g. C/min.
4	7.6916
6	5.7806
8	3.7264
10	2.1020
12	1.9014
14	1.8154
16	1.7581
18	1.7103
20	1.6816
25	1.6339
30	1.6243
35	1.6148
40	1.6052
45	1.5861
50	1.5765
55	1.5574
60	1.5383
65	1.5288
70	1.5192
75	1.5001
80	1.4905
85	1.4714
90	1.4523
95	1.4428
100	1.4237
110	1.3854
120	1.3472
130	1.3090
140	1.2708
150	1.2326
160	1.1943
170	1.1561
180	1.1179
190	1.0892
200	1.0606
220	1.0128
240	0.9555
260	0.8886
280	0.8122
300	0.7357
320	0.6593

GRAVIMETRIC FLOW EXPERIMENTS

Run:	158 - G	NO:	150 ppm	% H_2SO_4:	77.62
Dry Weight:	104.96 mg.	O_2:	2.0%	Correction:	0.5069
Deflection:	-14.86 mg.	H_2O:	10.0%	Date:	June 1, 1971
CO_2:	11.3%	t:	300°F		
SO_2:	500 ppm	F_t:	1000 cc/min.		

Time minutes	Load mg. H_2SO_4/g. C
1	0.86
2	1.62
3	2.29
4	2.95
5	3.53
6	4.19
7	4.67
8	5.24
9	5.72
10	6.19
12	7.15
14	8.00
16	8.86
18	9.72
20	10.58
25	12.39
30	14.10
35	15.82
40	17.53
45	19.25
50	20.87
60	24.20
70	27.34
80	30.49
90	33.35
100	35.82
110	38.21
120	40.49
130	42.78
140	44.87
150	47.07
160	48.97
170	50.69
180	52.50
190	54.21
200	55.93
220	59.26
240	62.50
260	65.74
280	68.98
300	72.12
320	75.27
340	78.70
360	82.13
380	85.46
400	88.61
420	91.65
440	94.61
460	97.47
480	100.23
500	102.80
520	105.28
540	107.76
560	110.14
580	112.42
600	114.52

Mean Load mg. H_2SO_4/g. C	Rate mg. H_2SO_4/g. C/min.
2	0.6955
4	0.5526
6	0.4735
8	0.4373
10	0.4097
12	0.3859
14	0.3659
16	0.3478
18	0.3325
20	0.3173
25	0.2877
30	0.2639
35	0.2439
40	0.2287
45	0.2144
50	0.2020
55	0.1915
60	0.1820
65	0.1734
70	0.1667
75	0.1601
80	0.1543
85	0.1496
90	0.1448
95	0.1401
100	0.1353
110	0.1277
120	0.1191
130	0.1124
140	0.1058
150	0.0991
160	0.0934
170	0.0877
180	0.0819
190	0.0762

* Run 158 - G continued on next page.

(CONTINUED FROM PREVIOUS PAGE)

Run:	158 - G	NO:	150 ppm	% H_2SO_4:	77.62
Dry Weight:	104.96 mg.	O_2:	2.0%	Correction:	0.5069
Deflection:	-14.86 mg.	H_2O:	10.0%	Date:	June 1, 1971
CO_2:	11.3%	t:	300°F		
SO_2:	500 ppm.	Ft:	1000 cc/min.		

Time minutes	Load mg. H_2SO_4/g. C
620	116.71
640	118.90
660	121.23
680	123.48
700	125.76
720	128.14
740	130.53
760	132.81
780	135.19
800	137.67
820	139.96
840	142.15
860	144.44
880	146.53
900	148.53
920	150.25
940	152.06
960	153.87
980	155.58
1000	157.39
1020	159.20
1040	160.92
1060	162.54
1080	164.35
1100	166.06
1120	167.87
1140	169.59
1160	171.30
1180	173.02
1200	174.83
1220	176.64
1240	178.45
1260	180.07
1280	181.69
1300	183.21
1320	184.93
1340	186.64
1360	188.17
1380	189.60
1400	191.03
1420	192.55
1440	194.07
1460	195.50
1480	196.93
1500	198.36

GRAVIMETRIC FLOW EXPERIMENTS

Run:	160 - G	NO:	150 ppm	% H_2SO_4:	80.42
Dry Weight:	102.06 mg.	O_2:	2.0%	Correction:	0.5252
Deflection:	-11.12 mg.	H_2O:	5.0%	Date:	June 9, 1971
CO_2:	11.3%	t:	200°F		
SO_2:	2000 ppm	F_t:	1000 cc/min.		

Time minutes	Load mg. H_2SO_4/g. C
1	4.90
2	7.15
3	8.82
4	10.09
5	11.66
6	12.93
7	14.11
8	15.09
9	16.07
10	16.95
12	18.62
14	20.09
16	21.56
18	22.93
20	24.20
25	27.53
30	30.57
35	33.71
40	36.65
45	39.58
50	42.52
60	48.30
70	53.69
80	58.50
90	62.81
100	67.51
110	72.11
120	76.72
130	81.32
140	85.83
150	90.05
160	94.16
170	98.47
180	102.88
190	107.39
200	111.70
210	116.30
220	120.91
230	125.51
240	130.41
250	135.31
260	140.60
270	145.89
280	150.99
290	155.50
300	159.12

Mean Load mg. H_2SO_4/g. C	Rate mg. H_2SO_4/g. C/min.
4	3.8017
6	2.6749
8	1.8910
10	1.3717
12	1.1660
14	1.0288
16	0.9112
18	0.8328
20	0.7643
25	0.6663
30	0.6271
35	0.6075
40	0.5879
45	0.5683
50	0.5585
55	0.5389
60	0.5291
65	0.5193
70	0.5095
75	0.4997
80	0.4801
85	0.4703
90	0.4654
95	0.4605
100	0.4507
110	0.4409
120	0.4311
130	0.4213
140	0.4164
150	0.4115
160	0.4115

GRAVIMETRIC FLOW EXPERIMENTS

Run:	161 - G	NO:	300 ppm	% H_2SO_4:	73.03
Dry Weight:	99.64 mg.	O_2:	2.0%	Correction:	0.4769
Deflection:	-9.76 mg.	H_2O:	10.0%	Date:	June 10, 1971
CO_2:	11.3%	t:	200°F		
SO_2:	2000 ppm	F_t:	1000 cc/min.		

Time minutes	Load mg. H_2SO_4/g. C
1	8.03
2	10.44
3	12.24
4	13.95
5	15.25
6	16.66
7	17.96
8	19.07
9	20.27
10	21.48
12	23.69
14	25.99
16	28.20
18	30.31
20	32.52
25	37.64
30	42.65
35	47.47
40	52.29
45	57.21
50	61.92
60	71.36
70	80.89
80	89.82
90	98.25
100	106.78
110	115.11
120	123.44
130	131.67
140	139.90
150	148.03
160	156.76
170	165.19
180	173.73
190	182.06
200	189.88
210	197.61
220	205.14
230	212.57
240	219.69
250	226.62
260	233.04
270	239.46
280	245.58
290	251.91
300	257.53

Mean Load mg. H_2SO_4/g. C	Rate mg. H_2SO_4/g. C/min.
4	8.1794
6	5.8711
8	4.2152
10	2.7098
12	1.7061
14	1.4352
16	1.2947
18	1.1943
20	1.1542
25	1.1040
30	1.0739
35	1.0438
40	1.0337
45	1.0136
50	0.9936
55	0.9835
60	0.9635
65	0.9534
70	0.9534
75	0.9434
80	0.9434
85	0.9334
90	0.9334
95	0.9233
100	0.9133
110	0.9033
120	0.8932
130	0.8731
140	0.8531
150	0.8430
160	0.8230
170	0.8029
180	0.7828
190	0.7627
200	0.7326
220	0.6724
240	0.6122
260	0.5420

GRAVIMETRIC FLOW EXPERIMENTS

Run:	162 - G	NO:	0 ppm	% H_2SO_4:	74.59
Dry Weight:	103.02 mg.	O_2:	2.0%	Correction:	0.4871
Deflection:	-11.12 mg.	H_2O:	10.0%	Date:	June 11, 1971
CO_2:	11.3%	t:	200°F		
SO_2:	2000 ppm	F_t:	1000 cc/min.		

Time minutes	Load mg. H_2SO_4/g. C
1	7.86
2	10.10
3	12.13
4	14.17
5	16.50
6	18.83
7	20.97
8	23.30
9	25.72
10	28.05
12	32.91
14	37.86
16	42.90
18	48.05
20	53.39
25	67.95
30	82.99
35	97.65
40	112.70
45	128.13
50	143.27
60	171.23
70	197.15
80	222.29
90	246.36
100	267.81
110	286.06
120	302.08
130	316.06
140	329.16
150	341.10
160	351.19
170	360.61
180	369.83
190	378.57
200	387.11
210	395.46
220	403.32
230	411.09
240	417.88
250	423.90
260	429.04
270	434.09
280	438.75
290	443.89
300	448.46

Mean Load mg. H_2SO_4/g. C	Rate mg. H_2SO_4/g. C/min.
2	9.3671
4	7.8626
6	6.2124
8	4.0769
10	2.3685
12	2.1355
14	2.0967
16	2.1161
18	2.1646
20	2.2035
25	2.3199
30	2.4170
35	2.5044
40	2.5723
45	2.6403
50	2.7082
60	2.8053
70	2.8926
80	2.9509
90	2.9897
100	3.0188
110	3.0188
120	2.9994
130	2.9703
140	2.9412
150	2.8829
160	2.8344
170	2.7762
180	2.7179
190	2.6500
200	2.5723
220	2.4073
240	2.2326
260	2.0384
280	1.8443
300	1.6502
320	1.4366
340	1.2134
360	1.0289
380	0.8639
400	0.7183
420	0.5824
440	0.4950

GRAVIMETRIC FLOW EXPERIMENTS

Run:	163 - G	NO:	50 ppm	% H_2SO_4:	73.33
Dry Weight:	99.18 mg.	O_2:	2.0%	Correction:	0.4789
Deflection:	-11.15 mg.	H_2O:	10.0%	Date:	June 14, 1971
CO_2:	11.3%	t:	200°F		
SO_2:	2000 ppm	F_t:	1000 cc/min.		

Time minutes	Load mg. H_2SO_4/g. C
1	4.13
2	6.96
3	9.07
4	11.09
5	12.81
6	14.32
7	15.83
8	17.24
9	18.75
10	20.17
12	23.09
14	25.71
16	28.43
18	30.95
20	33.37
25	39.42
30	45.27
35	51.02
40	56.77
45	62.92
50	68.76
60	80.66
70	91.95
80	103.35
90	114.44
100	125.13
110	135.41
120	145.59
130	155.88
140	165.86
150	175.54
160	185.32
170	194.60
180	203.67
190	212.04
200	219.80
210	227.47
220	234.62
230	241.78
240	248.94
250	255.80
260	262.25
270	268.60
280	274.85
290	280.80
300	286.55

Mean Load mg. H_2SO_4/g. C	Rate mg. H_2SO_4/g. C/min.
2	4.1641
4	3.4281
6	2.7929
8	2.2686
10	1.8653
12	1.7141
14	1.6132
16	1.5326
18	1.4620
20	1.4116
25	1.3107
30	1.2603
35	1.2402
40	1.2301
45	1.2099
50	1.1998
55	1.1948
60	1.1898
65	1.1847
70	1.1797
75	1.1696
80	1.1595
85	1.1494
90	1.1393
95	1.1343
100	1.1192
110	1.0990
120	1.0788
130	1.0486
140	1.0284
150	0.9982
160	0.9780
170	0.9478
180	0.9276
190	0.8974
200	0.8671
220	0.8066
240	0.7461
260	0.6755
280	0.6050

GRAVIMETRIC FLOW EXPERIMENTS

Run:	164 - G	NO:	150 ppm	% H_2SO_4:	73.10
Dry Weight:	98.02 mg.	O_2:	2.0%	Correction:	0.4774
Deflection:	-12.73 mg.	H_2O:	10.0%	Date:	June 15, 1971
CO_2:	11.3%	t:	200°F		
SO_2:	150 ppm	F_t:	1000 cc/min.		

Time minutes	Load mg. H_2SO_4/g. C
1	2.75
2	4.49
3	5.71
4	6.73
5	7.65
6	8.57
7	9.49
8	10.41
9	11.32
10	12.24
12	13.87
14	15.61
16	17.24
18	18.87
20	20.40
25	24.48
30	28.26
35	31.93
40	35.50
45	39.07
50	42.54
60	49.38
70	56.01
80	62.74
90	69.68
100	76.41
110	83.55
120	90.29
130	97.33
140	104.06
150	110.49
160	117.53
170	124.26
180	130.99
190	137.42
200	143.95
210	150.38
220	156.70
230	163.23
240	169.46
250	175.88
260	182.11
270	187.82
280	194.35
290	200.37
300	206.18
310	212.20
320	217.91
330	223.73
340	229.44
350	235.16
360	240.87
370	246.38
380	251.79
390	257.09

Mean Load mg. H_2SO_4/g. C	Rate mg. H_2SO_4/g. C/min.
2	2.4791
4	1.7139
6	1.1120
8	0.9692
10	0.8988
12	0.8468
14	0.8264
16	0.8060
18	0.7856
20	0.7754
25	0.7447
30	0.7345
35	0.7141
40	0.7039
45	0.6937
50	0.6886
55	0.6886
60	0.6835
65	0.6835
70	0.6835
75	0.6835
80	0.6835
85	0.6835
90	0.6835
95	0.6835
100	0.6835
110	0.6733
120	0.6631
130	0.6631
140	0.6529
150	0.6427
160	0.6376
170	0.6325
180	0.6223
190	0.6121
200	0.5917
220	0.5713
240	0.5407

APPENDIX A-2

COMPUTER CALCULATIONS - SORPTION RATE DATA AND MODELS

CARBON C - 71 23

RUN NUMBER = 138 - G 4 21 71
TEMPERATURE = 200. DEG F

TOTAL FLOW RATE = 1000.0 CC/MIN

PERCENT CO2 = 11.3
PERCENT O2 = 0.7
PERCENT H2O = 10.0

CONCENTRATION SO2 = 2000.0 PPM
CONCENTRATION NO = 150.0 PPM

PERCENT H2SO4 = 72.51
SATURATED LOADING = 0.38 GMS H2SO4/GM C

X, GMS H2SO4/GM C	RATE, GMS H2SO4/GM C-MIN	WESTVACO
0.00145	0.00242	-6.01935
0.00290	0.00175	-6.33976
0.00435	0.00123	-6.68953
0.00580	0.00084	-7.06419
0.00725	0.00062	-7.36893
0.00870	0.00053	-7.52116
0.01015	0.00051	-7.56037
0.01160	0.00049	-7.58636
0.01305	0.00048	-7.59772
0.01450	0.00048	-7.60915
0.01813	0.00046	-7.63099
0.02175	0.00045	-7.63722
0.02538	0.00044	-7.66030
0.02900	0.00042	-7.68458
0.03263	0.00042	-7.69134
0.03625	0.00041	-7.69933
0.03988	0.00040	-7.71653
0.04351	0.00039	-7.72454
0.04713	0.00039	-7.72339
0.05076	0.00038	-7.73171
0.05438	0.00038	-7.73061
0.05801	0.00037	-7.72923
0.06163	0.00037	-7.72813
0.06526	0.00037	-7.71668
0.06888	0.00037	-7.71517
0.07251	0.00037	-7.70345
0.07976	0.00036	-7.68976
0.08701	0.00036	-7.67580
0.09426	0.00035	-7.66113
0.10151	0.00035	-7.63543
0.10876	0.00035	-7.60905
0.11602	0.00035	-7.59266

Carbon - C - 71 - 23

RUN NUMBER = 139 4 22 71
TEMPERATURE = 200. DEG F

TOTAL FLOW RATE = 1000.0 CC/MIN

PERCENT CO2 = 11.3
PERCENT O2 = 2.0
PERCENT H2O = 10.0

CONCENTRATION SO2 = 2000.0 PPM
CONCENTRATION NO = 150.0 PPM

PERCENT H2SO4 = 73.58
SATURATED LOADING = 0.38 GMS H2SO4/GM C

X, GMS H2SO4/GM C	RATE, GMS H2SO4/GM C-MIN	WESTVACO	MCDWESTVACO	AMUNDSON
0.00294	0.00706	-4.94551	-4.93773	3.53011
0.00441	0.00511	-5.26417	-5.25248	2.55679
0.00589	0.00376	-5.56706	-5.55145	1.88126
0.00736	0.00213	-6.13291	-6.11336	1.06411
0.00883	0.00129	-6.63297	-6.60946	0.64283
0.01030	0.00108	-6.80795	-6.78047	0.53750
0.01177	0.00094	-6.93365	-6.90218	0.47213
0.01324	0.00087	-7.00967	-6.97420	0.43581
0.01472	0.00082	-7.06575	-7.02626	0.41039
0.01839	0.00077	-7.11958	-7.06996	0.38497
0.02207	0.00076	-7.11886	-7.05901	0.38133
0.02575	0.00075	-7.12772	-7.05754	0.37408
0.02943	0.00074	-7.12706	-7.04544	0.37044
0.03311	0.00073	-7.12639	-7.03522	0.36680
0.03679	0.00073	-7.12561	-7.02378	0.36319
0.04047	0.00072	-7.12491	-7.01230	0.35955
0.04415	0.00071	-7.12420	-7.00070	0.35591
0.04783	0.00070	-7.12336	-6.98885	0.35230
0.05151	0.00070	-7.11746	-6.97181	0.35046
0.05518	0.00069	-7.11664	-6.95973	0.34682
0.05886	0.00069	-7.11047	-6.94216	0.34502
0.06254	0.00069	-7.10418	-6.92435	0.34321
0.06622	0.00068	-7.09790	-6.90641	0.34137
0.06990	0.00068	-7.09140	-6.88812	0.33957
0.07358	0.00068	-7.08479	-6.86957	0.33777
0.08094	0.00067	-7.07132	-6.83180	0.33413
0.08830	0.00066	-7.05737	-6.79294	0.33048
0.09565	0.00065	-7.04279	-6.75282	0.32688
0.10301	0.00065	-7.02778	-6.71159	0.32324
0.11037	0.00064	-7.01785	-6.67473	0.31779
0.11773	0.00062	-7.00746	-6.63667	0.31235
0.12509	0.00061	-6.99659	-6.59735	0.30690
0.13244	0.00060	-6.98532	-6.55679	0.30142
0.13980	0.00059	-6.97949	-6.52078	0.29417
0.14716	0.00058	-6.96706	-6.47724	0.28873
0.16188	0.00055	-6.95341	-6.39831	0.27420
0.17659	0.00052	-6.93096	-6.30600	0.26150
0.19131	0.00049	-6.92051	-6.22046	0.24513

RUN NUMBER = 139 4 22 71

XPRIME, GMS H2SO4/GM C	JOST
0.00683	0.29290
0.00857	0.46663
0.00981	0.61173
0.01075	0.74418
0.01169	0.85530
0.01257	0.95485
0.01344	1.04200
0.01439	1.13551
0.01482	1.21465
0.01555	1.28638
0.01700	1.41202
0.01852	1.51187
0.01998	1.60184
0.02150	1.67441
0.02302	1.73736
0.02681	1.86531
0.03051	1.96681
0.03421	2.04590
0.03777	2.11816
0.04133	2.17760
0.04489	2.22761
0.04838	2.27372
0.05193	2.31068
0.05535	2.34882
0.05876	2.38253
0.06232	2.40684
0.06574	2.43397
0.06915	2.45841
0.07264	2.47804
0.07598	2.50070
0.07939	2.51912
0.08607	2.55594
0.09290	2.58336
0.09966	2.60896
0.10634	2.63312
0.11295	2.65615
0.11941	2.67978
0.12544	2.71048
0.13140	2.73974
0.13728	2.76810
0.14288	2.79960
0.14854	2.82746
0.15399	2.85736
0.15951	2.88389
0.16489	2.91111
0.17018	2.93801
0.17534	2.96565
0.18043	2.99292
0.18544	3.01990
0.19031	3.04770
0.19459	3.08341

AVCOX	AVCOY
0.99741	0.28328
0.99611	0.39112
0.99481	0.53156
0.99350	0.73975
0.99219	1.55562
0.99088	1.86046
0.98956	2.11608
0.98824	2.29455
0.98692	2.43669
0.98360	2.59760
0.98025	2.62241
0.97688	2.67322
0.97349	2.69950
0.97007	2.72631
0.96663	2.75337
0.96316	2.78126
0.95967	2.80973
0.95615	2.83848
0.95261	2.85338
0.94904	2.88334
0.94544	2.89841
0.94182	2.91364
0.93817	2.92933
0.93448	2.94489
0.93077	2.96060
0.92326	2.99288
0.91563	3.02586
0.90786	3.05923
0.89997	3.09371
0.89192	3.14671
0.88374	3.20157
0.87539	3.25837
0.86689	3.31762
0.85821	3.39936
0.84936	3.46347
0.83107	3.64703
0.81195	3.82404
0.79186	4.07944

TRACORX	TRACORY
-0.00778	1.26133
-0.01169	0.93875
-0.01561	0.63194
-0.01955	0.06214
-0.02351	-0.44187
-0.02748	-0.62082
-0.03147	-0.75051
-0.03548	-0.83054
-0.03950	-0.89064
-0.04962	-0.95459
-0.05984	-0.96409
-0.07018	-0.98328
-0.08062	-0.99307
-0.09117	-1.00295
-0.10183	-1.01283
-0.11261	-1.02291
-0.12350	-1.03309
-0.13452	-1.04327
-0.14565	-1.04850
-0.15692	-1.05895
-0.16831	-1.06416
-0.17983	-1.06940
-0.19149	-1.07478
-0.20328	-1.08007
-0.21521	-1.08539
-0.23952	-1.09623
-0.26443	-1.10719
-0.28998	-1.11816
-0.31620	-1.12937
-0.34312	-1.14636
-0.37079	-1.16364
-0.39924	-1.18123
-0.42853	-1.19925
-0.45871	-1.22359
-0.48982	-1.24227
-0.55511	-1.29391
-0.62496	-1.34131
-0.70005	-1.40596

Carbon - C - 71 - 23

RUN NUMBER = 140 4 23 71
TEMPERATURE = 200. DEG F

TOTAL FLOW RATE = 1000.0 CC/MIN

PERCENT CO2 = 11.3
PERCENT O2 = 2.0
PERCENT H2O = 10.0

CONCENTRATION SO2 = 2500.0 PPM
CONCENTRATION NO = 150.0 PPM

PERCENT H2SO4 = 72.91
SATURATED LOADING = 0.38 GMS H2SO4/GM C

X, GMS H2SO4/GM C	RATE, GMS H2SO4/GM C-MIN	AESTVACO	MODAESTVACO	AMOUNSON
0.00292	0.00456	-5.39201	-5.37430	1.82932
0.00437	0.00329	-5.70665	-5.69907	1.31422
0.00583	0.00156	-6.45070	-6.43523	0.62207
0.00729	0.00129	-6.63194	-6.61296	0.51593
0.00875	0.00113	-6.76073	-6.73744	0.45268
0.01021	0.00103	-6.85501	-6.82778	0.41034
0.01167	0.00096	-6.91345	-6.88227	0.38552
0.01312	0.00092	-6.95998	-6.92484	0.36653
0.01458	0.00089	-6.98433	-6.94520	0.35630
0.01823	0.00084	-7.02905	-6.97930	0.33731
0.02187	0.00083	-7.04078	-6.96150	0.33002
0.02552	0.00081	-7.04390	-6.97438	0.32565
0.02916	0.00080	-7.04716	-6.96732	0.32124
0.03281	0.00079	-7.05044	-6.96014	0.31687
0.03645	0.00078	-7.04913	-6.94828	0.31395
0.04010	0.00078	-7.04780	-6.93628	0.31103
0.04375	0.00077	-7.04644	-6.92413	0.30812
0.04739	0.00076	-7.04504	-6.91134	0.30520
0.05104	0.00076	-7.04362	-6.89940	0.30228
0.05468	0.00075	-7.03741	-6.88204	0.30000
0.05833	0.00074	-7.03589	-6.86925	0.29788
0.06197	0.00074	-7.03433	-6.85629	0.29496
0.06562	0.00073	-7.02776	-6.83319	0.29351
0.06926	0.00073	-7.02608	-6.82435	0.29059
0.07291	0.00072	-7.01931	-6.80628	0.28913
0.08020	0.00071	-7.01052	-6.77347	0.28476
0.08749	0.00070	-7.00671	-6.74503	0.27890
0.09478	0.00069	-6.99197	-6.70505	0.27598
0.10207	0.00068	-6.97670	-6.66339	0.27306
0.10936	0.00067	-6.96627	-6.62587	0.26669
0.11666	0.00066	-6.95538	-6.58367	0.26431
0.12395	0.00065	-6.94973	-6.55494	0.25845
0.13124	0.00064	-6.93791	-6.51424	0.25406
0.13853	0.00062	-6.93139	-6.47797	0.24824
0.14582	0.00061	-6.91851	-6.43443	0.24387
0.16040	0.00058	-6.90336	-6.35439	0.23217
0.17498	0.00055	-6.88620	-6.28712	0.22151

RUN NUMBER = 140 4 23 71

XPRIME, GMS H2SO4/GM C	JOST	AVCOX	AVCOY	TRACORX	TRACORY
0.00504	0.49622	0.99744	0.04755	-0.00770	0.00175
0.00564	0.75277	0.99615	0.76091	-0.01153	0.27324
0.00803	0.93345	0.99486	1.00754	-0.01547	-0.47471
0.00906	1.10431	0.97356	1.93449	-0.01937	-0.69984
0.01015	1.23164	0.99227	2.20905	-0.02324	-0.79296
0.01110	1.35173	0.99098	2.43792	-0.02723	-0.85676
0.01204	1.45272	0.98969	2.59391	-0.03118	-0.95317
0.01299	1.53934	0.98835	2.72827	-0.03515	-1.00367
0.01387	1.62165	0.98704	2.80665	-0.03913	-1.03199
0.01475	1.69495	0.98375	2.96462	-0.04916	-1.05675
0.01550	1.81823	0.96043	3.03912	-0.05926	-1.10860
0.01833	1.90948	0.97709	3.07983	-0.06951	-1.12175
0.02008	1.99209	0.97373	3.11792	-0.07995	-1.13556
0.02176	2.06836	0.97035	3.15590	-0.09030	-1.14927
0.02336	2.14038	0.96694	3.18521	-0.10065	-1.15952
0.02745	2.27682	0.96351	3.21506	-0.11152	-1.16789
0.03147	2.38338	0.96005	3.24551	-0.12230	-1.17727
0.03534	2.47598	0.95657	3.27653	-0.13321	-1.18676
0.03914	2.55505	0.95306	3.30814	-0.14423	-1.19639
0.04293	2.62058	0.94953	3.32450	-0.15537	-1.20132
0.04673	2.67505	0.94597	3.35705	-0.16664	-1.21196
0.05045	2.72527	0.94238	3.39024	-0.17804	-1.22090
0.05410	2.77268	0.93877	3.40708	-0.18957	-1.22586
0.05782	2.81021	0.93512	3.44127	-0.20123	-1.23584
0.06155	2.84319	0.93145	3.47663	-0.21303	-1.24087
0.06513	2.87884	0.92402	3.51175	-0.23706	-1.25612
0.06870	2.91103	0.91647	3.58557	-0.26168	-1.27692
0.07243	2.93392	0.90879	3.62346	-0.28692	-1.28743
0.07615	2.95452	0.90098	3.66216	-0.31282	-1.29805
0.07965	2.98164	0.89303	3.77179	-0.33940	-1.31420
0.08316	3.00621	0.88494	3.78339	-0.36671	-1.33062
0.09024	3.04741	0.87670	3.86929	-0.39479	-1.35355
0.09718	3.08700	0.86829	3.93552	-0.42367	-1.37012
0.10397	3.12591	0.85973	4.02829	-0.45342	-1.39334
0.11061	3.16422	0.85099	4.10056	-0.48406	-1.41112
0.11719	3.19998	0.83294	4.30710	-0.54837	-1.46027
0.12347	3.23976	0.81408	4.53496	-0.61708	-1.51182
0.12952	3.28123				
0.13536	3.32435				
0.14106	3.36739				
0.14683	3.40539				
0.15259	3.44052				
0.15814	3.47789				
0.16457	3.49390				
0.17049	3.51936				
0.17355	3.54369				

Carbon C - 71 - 23

RUN NUMBER = 141 4 26 71
TEMPERATURE = 200. DEG F

TOTAL FLOW RATE = 1000.0 CC/MIN

PERCENT CO2 = 11.3
PERCENT O2 = 2.0
PERCENT H2O = 10.0

CONCENTRATION SO2 = 1500.0 PPM
CONCENTRATION NO = 150.0 PPM

PERCENT H2SO4 = 74.01
SATURATED LOADING = 0.38 GMS H2SO4/GM C

X, GMS H2SO4/GM C	RATE, GMS H2SO4/GM C-MIN	WESTVACO	MODWESTVACO	AMUNDSON
0.00148	0.00512	-5.27107	-5.26717	3.41206
0.00296	0.00422	-5.46018	-5.45235	2.81312
0.00444	0.00232	-6.05457	-6.04281	1.54646
0.00592	0.00114	-6.75975	-6.74404	0.76097
0.00740	0.00094	-6.95501	-6.93535	0.62351
0.00888	0.00084	-7.06339	-7.03974	0.55725
0.01036	0.00078	-7.12310	-7.09545	0.52286
0.01184	0.00075	-7.16228	-7.13062	0.50075
0.01332	0.00074	-7.17805	-7.14237	0.49093
0.01480	0.00073	-7.18920	-7.14947	0.48353
0.01850	0.00072	-7.18402	-7.13411	0.48111
0.02220	0.00071	-7.18913	-7.12893	0.47376
0.02590	0.00070	-7.18921	-7.11861	0.46883
0.02960	0.00070	-7.18917	-7.10807	0.46394
0.03330	0.00068	-7.19453	-7.10281	0.45659
0.03700	0.00068	-7.19466	-7.09221	0.45166
0.04071	0.00067	-7.19469	-7.08139	0.44677
0.04441	0.00066	-7.19483	-7.07056	0.44184
0.04811	0.00066	-7.19486	-7.05950	0.43696
0.05181	0.00065	-7.19500	-7.04843	0.43202
0.05551	0.00064	-7.18939	-7.03148	0.42955
0.05921	0.00064	-7.18357	-7.01419	0.42714
0.06291	0.00063	-7.18358	-7.00260	0.42220
0.06661	0.00063	-7.18348	-6.99076	0.41732
0.07031	0.00062	-7.17753	-6.97293	0.41485
0.07401	0.00061	-7.17747	-6.96085	0.40992
0.08141	0.00060	-7.17109	-6.92998	0.40257
0.08881	0.00059	-7.16442	-6.89822	0.39521
0.09621	0.00058	-7.15745	-6.86550	0.38786
0.10361	0.00057	-7.15667	-6.83829	0.37804
0.11101	0.00055	-7.15584	-6.81032	0.36822
0.11842	0.00053	-7.16187	-6.78846	0.35594
0.12582	0.00052	-7.16114	-6.75903	0.34612
0.13322	0.00050	-7.16774	-6.73607	0.33383
0.14062	0.00048	-7.17478	-6.71267	0.32155
0.14802	0.00046	-7.18217	-6.68865	0.30931
0.16282	0.00042	-7.20771	-6.64826	0.28227
0.17762	0.00039	-7.22800	-6.59796	0.25775
0.19243	0.00034	-7.27341	-6.56741	0.22830

RUN NUMBER = 141 4 26 71

XPRIME, GMS H2SO4/CM C	JOST
0.00449	0.33390
0.00619	0.48487
0.00722	0.62362
0.00803	0.74719
0.00894	0.84872
0.00958	0.93976
0.01024	1.02533
0.01093	1.09333
0.01171	1.15302
0.01245	1.20497
0.01392	1.29298
0.01539	1.36416
0.01687	1.42291
0.01834	1.47222
0.01981	1.51420
0.02342	1.60142
0.02703	1.66491
0.03063	1.71385
0.03402	1.76354
0.03726	1.81140
0.04051	1.85159
0.04367	1.88934
0.04676	1.92474
0.04993	1.95285
0.05302	1.98036
0.05597	2.01014
0.05899	2.03438
0.06201	2.05626
0.06510	2.07376
0.06812	2.09193
0.07114	2.10857
0.07703	2.14203
0.08285	2.17269
0.08859	2.20115
0.09426	2.22790
0.09979	2.25479
0.10560	2.27262
0.11120	2.29316
0.11643	2.31909
0.12188	2.33837
0.12710	2.36026
0.13219	2.38295
0.13719	2.40538
0.14228	2.42485
0.14728	2.44433
0.15207	2.46600
0.15663	2.48987
0.16105	2.51470
0.16532	2.54047
0.16945	2.56708
0.17343	2.59474
0.17696	2.62774
0.18057	2.65925
0.18389	2.69190
0.18742	2.72122
0.19088	2.75043
0.19412	2.78177
0.19596	2.80154

AVCOX	AVCOY
0.99870	0.29308
0.99740	0.35548
0.99609	0.64664
0.99478	1.31411
0.99347	1.60382
0.99215	1.79454
0.99083	1.91257
0.98950	1.99700
0.98817	2.03694
0.98684	2.06811
0.98350	2.07851
0.98013	2.11076
0.97674	2.13297
0.97333	2.15543
0.96989	2.19014
0.96642	2.21406
0.96294	2.23827
0.95942	2.26326
0.95588	2.28856
0.95232	2.31470
0.94873	2.32799
0.94510	2.34117
0.94146	2.36853
0.93778	2.39625
0.93407	2.41051
0.93034	2.43952
0.92278	2.48407
0.91509	2.53028
0.90727	2.57824
0.89931	2.64520
0.89121	2.71573
0.88296	2.80947
0.87456	2.88917
0.86598	2.99550
0.85724	3.10995
0.84831	3.23298
0.82987	3.54266
0.81057	3.87970
0.79031	4.38027

TRACORX	TRACORY
-0.00390	1.22731
-0.00782	1.03429
-0.01175	0.43597
-0.01570	-0.27316
-0.01967	-0.47239
-0.02365	-0.58475
-0.02765	-0.64845
-0.03166	-0.69165
-0.03569	-0.71145
-0.03973	-0.72654
-0.04992	-0.73165
-0.06021	-0.74705
-0.07060	-0.75752
-0.08111	-0.76799
-0.09172	-0.78396
-0.10246	-0.79483
-0.11330	-0.80570
-0.12427	-0.81681
-0.13536	-0.82793
-0.14657	-0.83928
-0.15791	-0.84501
-0.16938	-0.85065
-0.18098	-0.86227
-0.19272	-0.87391
-0.20460	-0.87984
-0.21662	-0.89160
-0.24110	-0.90990
-0.26620	-0.92833
-0.29195	-0.94711
-0.31837	-0.97275
-0.34552	-0.99906
-0.37342	-1.03300
-0.40212	-1.06097
-0.43167	-1.09711
-0.46211	-1.13461
-0.49352	-1.17340
-0.55945	-1.26488
-0.63004	-1.35576
-0.70600	-1.47711

Carbon- C - 71 - 23

RUN NUMBER = 142 4 27 71
TEMPERATURE = 200. DEG F

TOTAL FLOW RATE = 1000.0 CC/MIN

PERCENT CO2 = 11.3
PERCENT O2 = 2.0
PERCENT H2O = 10.0

CONCENTRATION SO2 = 1000.0 PPM
CONCENTRATION NO = 150.0 PPM

PERCENT H2SO4 = 71.88
SATURATED LOADING = 0.38 GMS H2SO4/GM C

X, GMS H2SO4/GM C	RATE, GMS H2SO4/GM C-MIN
0.00144	0.00504
0.00288	0.00368
0.00431	0.00214
0.00575	0.00096
0.00719	0.00083
0.00863	0.00076
0.01006	0.00071
0.01150	0.00067
0.01294	0.00066
0.01438	0.00065
0.01797	0.00064
0.02156	0.00063
0.02516	0.00062
0.02875	0.00062
0.03235	0.00061
0.03594	0.00060
0.03953	0.00059
0.04313	0.00059
0.04672	0.00058
0.05032	0.00058
0.05391	0.00057
0.05750	0.00056
0.06110	0.00056
0.06469	0.00055
0.06829	0.00054
0.07188	0.00054
0.07907	0.00053
0.08626	0.00052
0.09344	0.00051
0.10063	0.00050
0.10782	0.00049
0.11501	0.00047
0.12220	0.00046
0.12938	0.00045
0.13657	0.00043
0.14376	0.00042
0.15814	0.00039
0.17251	0.00036

WESTVACO	MODWESTVACO	AMUNDSON
-5.28716	-5.28337	5.03699
-5.59679	-5.58919	3.68169
-6.13647	-6.12506	2.13800
-6.92926	-6.91402	0.96391
-7.07084	-7.05175	0.83345
-7.16276	-7.13980	0.75733
-7.22813	-7.20129	0.70665
-7.27152	-7.24079	0.67402
-7.29485	-7.26021	0.65591
-7.29653	-7.25797	0.65224
-7.30344	-7.25499	0.64139
-7.30484	-7.24642	0.63413
-7.31203	-7.24353	0.62327
-7.31357	-7.23489	0.61601
-7.31514	-7.22617	0.60875
-7.31662	-7.21727	0.60156
-7.31826	-7.20841	0.59430
-7.31994	-7.19948	0.58704
-7.32166	-7.19047	0.57978
-7.31704	-7.17500	0.57619
-7.31876	-7.16576	0.56893
-7.32052	-7.15644	0.56167
-7.31573	-7.14044	0.55808
-7.31749	-7.13087	0.55082
-7.31929	-7.12121	0.54356
-7.31433	-7.10465	0.53996
-7.31117	-7.07788	0.52904
-7.30772	-7.05026	0.51818
-7.30411	-7.02188	0.50733
-7.30034	-6.99270	0.49648
-7.29652	-6.96282	0.48555
-7.29237	-6.93190	0.47470
-7.28800	-6.90003	0.46384
-7.29152	-6.87527	0.44932
-7.29510	-6.84976	0.43487
-7.29909	-6.82377	0.42035
-7.30771	-6.76960	0.39139
-7.31781	-6.71271	0.36235

RUN NUMBER = 142 4 27 71

XPRIME, GMS H2SO4/GM C	JCST
0.00449	0.22259
0.00551	0.36324
0.00652	0.44016
0.00732	0.54654
0.00819	0.61071
0.00906	0.66248
0.00978	0.71554
0.01051	0.76126
0.01123	0.80106
0.01189	0.84112
0.01312	0.91477
0.01435	0.97580
0.01566	1.02201
0.01696	1.06154
0.01826	1.09501
0.02138	1.16947
0.02450	1.22465
0.02754	1.27101
0.03073	1.30171
0.03377	1.33257
0.03667	1.36339
0.03957	1.38994
0.04247	1.41287
0.04537	1.43264
0.04820	1.45242
0.05109	1.46793
0.05370	1.48971
0.05631	1.50948
0.05906	1.52378
0.06167	1.54038
0.06435	1.55390
0.06950	1.58272
0.07501	1.59970
0.08059	1.61307
0.08610	1.62606
0.09146	1.64006
0.09682	1.65251
0.10211	1.66483
0.10726	1.67818
0.11248	1.68922
0.11748	1.70241
0.12241	1.71552
0.12719	1.72967
0.13161	1.74756
0.13633	1.76046
0.14089	1.77441
0.14531	1.78925
0.14959	1.80494
0.15394	1.81891
0.15814	1.83386
0.16205	1.85124
0.16575	1.87031
0.16640	1.87497

AVCOX	AVCOY
0.99874	0.13853
0.99747	0.27161
0.99620	0.46773
0.99493	1.03744
0.99365	1.19983
0.99238	1.32043
0.99109	1.41512
0.98981	1.48364
0.98852	1.52461
0.98723	1.53318
0.98398	1.55912
0.98071	1.57697
0.97743	1.60444
0.97411	1.62335
0.97078	1.64270
0.96742	1.66233
0.96404	1.68264
0.96064	1.70345
0.95721	1.72478
0.95376	1.73554
0.95028	1.75758
0.94678	1.78040
0.94325	1.79187
0.93969	1.81549
0.93610	1.83973
0.93249	1.85198
0.92518	1.89023
0.91776	1.92982
0.91021	1.97111
0.90254	2.01420
0.89473	2.05952
0.88678	2.10661
0.87869	2.15591
0.87045	2.22558
0.85204	2.29951
0.85347	2.37895
0.83580	2.55502
0.81734	2.75979

TRACORX	TRACORY
-0.00379	1.61681
-0.00760	1.30337
-0.01141	0.75987
-0.01525	-0.03676
-0.01910	-0.18218
-0.02296	-0.27796
-0.02684	-0.34722
-0.03073	-0.39450
-0.03464	-0.42174
-0.03857	-0.42734
-0.04844	-0.44412
-0.05842	-0.45551
-0.06850	-0.47277
-0.07868	-0.48449
-0.08896	-0.49634
-0.09936	-0.50822
-0.10986	-0.52036
-0.12047	-0.53266
-0.13119	-0.54510
-0.14204	-0.55132
-0.15300	-0.56400
-0.16408	-0.57684
-0.17529	-0.58326
-0.18662	-0.59635
-0.19808	-0.60962
-0.20968	-0.61626
-0.23329	-0.63670
-0.25746	-0.65743
-0.28224	-0.67860
-0.30764	-0.70022
-0.33371	-0.72247
-0.36047	-0.74508
-0.38797	-0.76821
-0.41625	-0.80002
-0.44535	-0.83270
-0.47532	-0.86666
-0.53811	-0.93806
-0.60510	-1.01515

Carbon- C - 71 - 23

RUN NUMBER = 143 4 28 71
TEMPERATURE = 200. DEG F

TOTAL FLOW RATE = 1000.0 CC/MIN

PERCENT CO2 = 11.3
PERCENT O2 = 2.0
PERCENT H2O = 10.0

CONCENTRATION SO2 = 500.0 PPM
CONCENTRATION NO = 150.0 PPM

PERCENT H2SO4 = 72.45
SATURATED LOADING = 0.38 GMS H2SO4/GM C

X, GMS H2SO4/GM C	RATE, GMS H2SO4/GM C-MIN	WESTVACO	MUDWESTVACO	AMUNDSON
0.00145	0.00337	-5.68954	-5.69571	6.73655
0.00290	0.00216	-6.13065	-6.12300	4.31715
0.00435	0.00105	-6.84717	-6.83566	2.10062
0.00580	0.00083	-7.07507	-7.05970	1.66606
0.00724	0.00070	-7.24661	-7.22736	1.39799
0.00869	0.00062	-7.36964	-7.34649	1.23136
0.01014	0.00056	-7.46460	-7.43754	1.11544
0.01159	0.00052	-7.52769	-7.49671	1.04313
0.01304	0.00050	-7.57359	-7.53667	0.99242
0.01449	0.00048	-7.59927	-7.56039	0.96344
0.01811	0.00047	-7.60446	-7.55563	0.94895
0.02173	0.00046	-7.61757	-7.55868	0.92722
0.02536	0.00046	-7.62316	-7.55410	0.91273
0.02898	0.00045	-7.62087	-7.54154	0.90548
0.03260	0.00045	-7.62662	-7.53692	0.89099
0.03622	0.00044	-7.63254	-7.53235	0.87650
0.03985	0.00043	-7.63025	-7.51947	0.86926
0.04347	0.00043	-7.62791	-7.50642	0.85201
0.04709	0.00042	-7.63404	-7.50173	0.84752
0.05071	0.00042	-7.63168	-7.48943	0.84028
0.05434	0.00042	-7.62928	-7.47497	0.83303
0.05796	0.00041	-7.62683	-7.46133	0.82579
0.06158	0.00041	-7.62433	-7.44752	0.81854
0.06520	0.00041	-7.62178	-7.43353	0.81130
0.06883	0.00040	-7.61917	-7.41935	0.80405
0.07245	0.00040	-7.61652	-7.40498	0.79681
0.07969	0.00039	-7.60181	-7.36644	0.78956
0.08694	0.00039	-7.59591	-7.33612	0.77507
0.09418	0.00038	-7.58375	-7.30492	0.76058
0.10143	0.00037	-7.58331	-7.27281	0.74609
0.10867	0.00037	-7.57657	-7.23972	0.73160
0.11592	0.00036	-7.56951	-7.20559	0.71711
0.12316	0.00035	-7.57247	-7.18073	0.69537
0.13041	0.00034	-7.56491	-7.14456	0.68088
0.13765	0.00033	-7.55697	-7.10716	0.66640
0.14490	0.00032	-7.55978	-7.07962	0.64466
0.15939	0.00030	-7.56597	-7.02220	0.60119

RUN NUMBER = 143 4 28 71

XPRIME, GYS H2SO4/SM C	JOST
0.00326	0.15336
0.00442	0.22627
0.00536	0.27978
0.00619	0.32477
0.00688	0.36323
0.00761	0.39436
0.00826	0.42376
0.00877	0.45628
0.00935	0.48149
0.00985	0.50745
0.01067	0.55210
0.01195	0.58557
0.01304	0.61345
0.01406	0.64033
0.01500	0.66679
0.01739	0.71889
0.01963	0.76426
0.02195	0.79744
0.02426	0.82428
0.02651	0.84875
0.02866	0.87160
0.03078	0.89332
0.03289	0.91227
0.03506	0.92702
0.03709	0.94372
0.03912	0.95869
0.04100	0.97562
0.04317	0.98441
0.04527	0.99395
0.04738	1.00264
0.04933	1.01356
0.05324	1.03299
0.05715	1.04990
0.06099	1.06578
0.06463	1.07977
0.06860	1.09336
0.07251	1.10333
0.07664	1.10912
0.08055	1.11732
0.08453	1.12380
0.08845	1.13062
0.09228	1.13765
0.09597	1.14614
0.09987	1.15130
0.10358	1.15850
0.10735	1.16442
0.11119	1.16918
0.11503	1.17362
0.11880	1.17849
0.12249	1.18376
0.12590	1.19146
0.12886	1.20286
0.13205	1.21169
0.13509	1.22141
0.13813	1.23070
0.14125	1.23895
0.14400	1.24999
0.14748	1.25441
0.15081	1.25985
0.15407	1.26564
0.15726	1.27178
0.16056	1.27710
0.16356	1.28396

AVCOX	AVCOY
0.99873	0.14844
0.99745	0.23163
0.99617	0.47605
0.99489	0.66022
0.99360	0.71531
0.99231	0.81211
0.99102	0.89651
0.98973	0.95865
0.98843	1.00764
0.98712	1.03795
0.98385	1.05380
0.98056	1.07550
0.97724	1.09562
0.97390	1.10439
0.97054	1.12235
0.96716	1.14090
0.96375	1.15041
0.96031	1.16008
0.95686	1.17991
0.95337	1.19009
0.94986	1.20044
0.94633	1.21097
0.94277	1.22169
0.93918	1.23260
0.93556	1.24370
0.93192	1.25501
0.92454	1.26653
0.91705	1.29021
0.90943	1.31479
0.90168	1.34032
0.89379	1.36687
0.88576	1.39449
0.87759	1.43307
0.86926	1.46868
0.86076	1.50061
0.85210	1.55120
0.83422	1.66337

TRACORX	TRACORY
-0.00382	1.90755
-0.00766	1.46260
-0.01151	0.74223
-0.01537	0.51046
-0.01925	0.33504
-0.02314	0.20812
-0.02705	0.10925
-0.03098	0.04223
-0.03492	-0.00761
-0.03888	-0.03724
-0.04884	-0.05240
-0.05890	-0.07557
-0.06906	-0.09132
-0.07933	-0.09929
-0.08970	-0.11542
-0.10018	-0.13182
-0.11078	-0.14012
-0.12148	-0.14849
-0.13231	-0.16544
-0.14325	-0.17403
-0.15431	-0.18269
-0.16550	-0.19142
-0.17681	-0.20023
-0.18825	-0.20912
-0.19982	-0.21809
-0.21153	-0.22714
-0.23537	-0.23628
-0.25979	-0.25480
-0.28483	-0.27367
-0.31050	-0.29291
-0.33685	-0.31252
-0.36392	-0.33253
-0.39174	-0.36330
-0.42035	-0.38436
-0.44981	-0.40587
-0.48016	-0.43903
-0.54377	-0.50884

CARBON C - 71 -23

RUN NUMBER = 144 - G 4 29 71
TEMPERATURE = 200. DEG F

TOTAL FLOW RATE = 1000.0 CC/MIN

PERCENT CO2 = 11.3
PERCENT O2 = 3.5
PERCENT H2O = 10.0

CONCENTRATION SO2 = 2000.0 PPM
CONCENTRATION NO = 150.0 PPM

PERCENT H2SO4 = 73.31
SATURATED LOADING = 0.38 GMS H2SO4/GM C

X, GMS H2SO4/GM C	RATE, GMS H2SO4/GM C-MIN	WESTVACO
0.00293	0.00535	-5.22311
0.00440	0.00375	-5.57390
0.00586	0.00253	-5.96561
0.00733	0.00155	-6.45310
0.00880	0.00143	-6.52918
0.01026	0.00136	-6.57599
0.01173	0.00130	-6.61398
0.01320	0.00125	-6.64786
0.01466	0.00120	-6.68315
0.01833	0.00114	-6.73022
0.02199	0.00110	-6.75328
0.02566	0.00108	-6.76000
0.02932	0.00107	-6.75996
0.03299	0.00106	-6.75647
0.03665	0.00105	-6.75285
0.04032	0.00105	-6.74930
0.04399	0.00104	-6.74547
0.04765	0.00103	-6.74165
0.05132	0.00103	-6.73775
0.05498	0.00102	-6.73019
0.05865	0.00102	-6.72252
0.06231	0.00101	-6.71465
0.06598	0.00101	-6.71045
0.06964	0.00100	-6.70235
0.07331	0.00100	-6.69421
0.08064	0.00099	-6.67745
0.08797	0.00098	-6.66023
0.09530	0.00098	-6.64235
0.10263	0.00097	-6.62774
0.10996	0.00095	-6.61648
0.11730	0.00094	-6.60074
0.12463	0.00092	-6.59237
0.13196	0.00090	-6.58774
0.13929	0.00088	-6.58284
0.14662	0.00085	-6.57766
0.16128	0.00081	-6.57099
0.17594	0.00076	-6.56341
0.19061	0.00071	-6.55990
0.20527	0.00065	-6.55583

CARBON C - 71 - 23

RUN NUMBER = 145 - G 4 30 71
TEMPERATURE = 200. DEG F

TOTAL FLOW RATE = 1000.0 CC/MIN

PERCENT CO2 = 0.0
PERCENT O2 = 2.0
PERCENT H2O = 10.0

CONCENTRATION SO2 = 2000.0 PPM
CONCENTRATION NO = 150.0 PPM

PERCENT H2SO4 = 72.61
SATURATED LOADING = 0.38 GMS H2SO4/GM C

X, GMS H2SO4/GM C	RATE, GMS H2SO4/GM C-MIN	WESTVACO
0.00290	0.00648	-5.03189
0.00436	0.00515	-5.25814
0.00581	0.00378	-5.56315
0.00726	0.00266	-5.90916
0.00871	0.00148	-6.49575
0.01017	0.00107	-6.81763
0.01162	0.00102	-6.85510
0.01307	0.00099	-6.87969
0.01452	0.00097	-6.89768
0.01815	0.00093	-6.92936
0.02178	0.00090	-6.95062
0.02541	0.00088	-6.96460
0.02904	0.00086	-6.97495
0.03267	0.00085	-6.98562
0.03630	0.00083	-6.99227
0.03994	0.00082	-6.99475
0.04357	0.00081	-6.99720
0.04720	0.00080	-6.99980
0.05083	0.00079	-6.99788
0.05446	0.00078	-6.99591
0.05809	0.00078	-6.99390
0.06172	0.00077	-6.99185
0.06535	0.00076	-6.98985
0.06898	0.00076	-6.98771
0.07261	0.00075	-6.98069
0.07987	0.00074	-6.97128
0.08713	0.00073	-6.96638
0.09439	0.00071	-6.96125
0.10165	0.00070	-6.95599
0.10891	0.00068	-6.96094
0.11618	0.00066	-6.95527
0.12344	0.00064	-6.96048
0.13070	0.00062	-6.96029
0.13796	0.00060	-6.96599
0.14522	0.00058	-6.97220
0.15974	0.00054	-6.98572
0.17426	0.00049	-7.00892

CARBON C - 71 - 23

RUN NUMBER = 148 - G 5 7 71
TEMPERATURE = 150. DEG F

TOTAL FLOW RATE = 1000.0 CC/MIN

PERCENT CO2 = 11.3
PERCENT O2 = 2.0
PERCENT H2O = 10.0

CONCENTRATION SO2 = 2500.0 PPM
CONCENTRATION NO = 150.0 PPM

PERCENT H2SO4 = 57.18
SATURATED LOADING = 0.38 GMS H2SO4/GM C

X, GMS H2SO4/GM C	RATE, GMS H2SO4/GM C-MIN	WESTVACO
0.00229	0.02170	-3.82459
0.00343	0.02000	-3.90312
0.00457	0.01844	-3.98119
0.00572	0.01705	-4.05639
0.00686	0.01572	-4.13462
0.00801	0.01447	-4.21415
0.00915	0.01331	-4.29471
0.01029	0.01224	-4.37592
0.01144	0.01122	-4.45984
0.01429	0.00875	-4.70013
0.01715	0.00671	-4.95756
0.02001	0.00513	-5.21921
0.02287	0.00416	-5.41930
0.02573	0.00380	-5.50237
0.02859	0.00351	-5.57331
0.03145	0.00326	-5.64048
0.03431	0.00303	-5.70435
0.03717	0.00283	-5.76372
0.04003	0.00269	-5.80662
0.04288	0.00257	-5.84341
0.04574	0.00248	-5.87305
0.04860	0.00238	-5.90176
0.05146	0.00230	-5.92937
0.05432	0.00223	-5.95318
0.05718	0.00216	-5.97538
0.06290	0.00203	-6.01697
0.06862	0.00191	-6.06203
0.07433	0.00180	-6.10466
0.08005	0.00169	-6.14423
0.08577	0.00160	-6.18355
0.09149	0.00151	-6.22233
0.09721	0.00142	-6.26035
0.10292	0.00133	-6.30579
0.10864	0.00125	-6.35135
0.11436	0.00117	-6.39535
0.12580	0.00102	-6.48628
0.13723	0.00089	-6.57693
0.14867	0.00078	-6.66498
0.16010	0.00068	-6.74676
0.17154	0.00059	-6.82689
0.18298	0.00052	-6.91357
0.19441	0.00044	-7.02084
0.20585	0.00037	-7.12669
0.21728	0.00031	-7.24405

CARBON C 71 - 23

RUN NUMBER = 149 - G 5 10 71
TEMPERATURE = 150. DEG F

TOTAL FLOW RATE = 1000.0 CC/MIN

PERCENT CO2 = 11.3
PERCENT O2 = 2.0
PERCENT H2O = 10.0

CONCENTRATION SO2 = 1500.0 PPM
CONCENTRATION NO = 150.0 PPM

PERCENT H2SO4 = 56.86
SATURATED LOADING = 0.38 GMS H2SO4/GM C

X, GMS H2SO4/GM C	RATE, GMS H2SO4/GM C-MIN	WESTVACO
0.00569	0.01511	-4.17746
0.00682	0.01371	-4.27187
0.00796	0.01241	-4.36807
0.00910	0.01122	-4.46555
0.01023	0.01020	-4.55827
0.01137	0.00925	-4.65236
0.01421	0.00712	-4.90639
0.01706	0.00548	-5.16134
0.01990	0.00424	-5.41044
0.02274	0.00348	-5.59894
0.02559	0.00291	-5.76863
0.02843	0.00259	-5.87837
0.03127	0.00220	-6.03522
0.03412	0.00202	-6.10890
0.03696	0.00190	-6.16141
0.03980	0.00182	-6.19770
0.04264	0.00176	-6.22552
0.04549	0.00171	-6.24193
0.04833	0.00168	-6.25409
0.05117	0.00164	-6.26661
0.05402	0.00161	-6.27781
0.05686	0.00158	-6.28935
0.06255	0.00152	-6.31173
0.06823	0.00146	-6.33356
0.07392	0.00140	-6.35289
0.07960	0.00135	-6.37138
0.08529	0.00131	-6.38677
0.09098	0.00125	-6.40949
0.09666	0.00120	-6.43368
0.10235	0.00114	-6.45950
0.10803	0.00109	-6.48964
0.11372	0.00103	-6.52466
0.12509	0.00091	-6.60669
0.13646	0.00079	-6.70137
0.14784	0.00068	-6.80490
0.15921	0.00058	-6.91410
0.17058	0.00049	-7.03421
0.18195	0.00040	-7.16077
0.19332	0.00033	-7.29206
0.20470	0.00028	-7.41469

CARBON C - 71 - 23

RUN NUMBER = 150 - G 5 11 71
TEMPERATURE = 150. DEG F

TOTAL FLOW RATE = 1000.0 CC/MIN

PERCENT CO2 = 11.3
PERCENT O2 = 2.0
PERCENT H2O = 10.0

CONCENTRATION SO2 = 500.0 PPM
CONCENTRATION NO = 150.0 PPM

PERCENT H2SO4 = 53.33
SATURATED LOADING = 0.38 GMS H2SO4/GM C

X, GMS H2SO4/GM C	RATE, GMS H2SO4/GM C-MIN	WESTVACO
0.00427	0.01620	-4.11134
0.00533	0.01322	-4.31159
0.00640	0.01123	-4.47216
0.00747	0.00956	-4.62984
0.00853	0.00815	-4.78685
0.00960	0.00694	-4.94486
0.01067	0.00591	-5.10342
0.01333	0.00394	-5.50164
0.01600	0.00268	-5.88076
0.01867	0.00187	-6.23278
0.02133	0.00146	-6.46898
0.02400	0.00121	-6.65079
0.02666	0.00112	-6.72350
0.02933	0.00104	-6.78601
0.03200	0.00101	-6.80787
0.03466	0.00100	-6.81275
0.03733	0.00098	-6.82027
0.04000	0.00098	-6.81757
0.04266	0.00097	-6.82009
0.04533	0.00096	-6.82261
0.04800	0.00095	-6.82518
0.05066	0.00094	-6.82513
0.05333	0.00093	-6.82776
0.05866	0.00091	-6.83325
0.06400	0.00090	-6.83048
0.06933	0.00087	-6.84194
0.07466	0.00085	-6.85099
0.07999	0.00083	-6.85736
0.08533	0.00081	-6.86407
0.09066	0.00078	-6.87744
0.09599	0.00076	-6.88821
0.10133	0.00074	-6.89606
0.10666	0.00072	-6.91140
0.11733	0.00067	-6.94459
0.12799	0.00062	-6.98196
0.13866	0.00056	-7.04219
0.14932	0.00049	-7.11253
0.15999	0.00042	-7.23136
0.17066	0.00034	-7.38840
0.18132	0.00026	-7.59702

CARBON C - 71 - 23

RUN NUMBER = 151- G 5 12 71
TEMPERATURE = 300. DEG F

TOTAL FLOW RATE = 1000.0 CC/MIN

PERCENT CO2 = 11.3
PERCENT O2 = 2.0
PERCENT H2O = 10.0

CONCENTRATION SO2 = 2500.0 PPM
CONCENTRATION NO = 150.0 PPM

PERCENT H2SO4 = 81.86
SATURATED LOADING = 0.38 GMS H2SO4/GM C

X, GMS H2SO4/GM C	RATE, GMS H2SO4/GM C-MIN	WESTVACO
0.00164	0.00288	-5.84454
0.00327	0.00208	-6.16887
0.00491	0.00146	-6.51515
0.00655	0.00109	-6.80393
0.00819	0.00092	-6.96862
0.00982	0.00081	-7.09522
0.01146	0.00073	-7.19619
0.01310	0.00067	-7.27876
0.01473	0.00062	-7.34320
0.01637	0.00059	-7.39210
0.02046	0.00053	-7.48165
0.02456	0.00050	-7.52464
0.02865	0.00048	-7.55394
0.03274	0.00048	-7.55892
0.03684	0.00047	-7.56422
0.04093	0.00046	-7.56082
0.04502	0.00046	-7.55735
0.04912	0.00046	-7.55398
0.05321	0.00045	-7.55928
0.05730	0.00044	-7.55584
0.06139	0.00044	-7.56131
0.06549	0.00043	-7.56713
0.06958	0.00042	-7.57315
0.07367	0.00041	-7.57916
0.07777	0.00041	-7.57570
0.08186	0.00040	-7.59222
0.09005	0.00038	-7.60598
0.09823	0.00036	-7.62076
0.10642	0.00035	-7.63690
0.11460	0.00033	-7.65407
0.12279	0.00031	-7.68575
0.13098	0.00029	-7.72037
0.13916	0.00027	-7.77396
0.14735	0.00025	-7.81827

CARBON C - 71 - 23

RUN NUMBER = 152 - G 5 14 71
TEMPERATURE = 300. DEG F

TOTAL FLOW RATE = 1000.0 CC/MIN

PERCENT CO2 = 11.3
PERCENT O2 = 2.0
PERCENT H2O = 10.0

CONCENTRATION SO2 = 1500.0 PPM
CONCENTRATION NO = 150.0 PPM

PERCENT H2SO4 = 82.66
SATURATED LOADING = 0.38 GMS H2SO4/GM C

X, GMS H2SO4/GM C	RATE, GMS H2SO4/GM C-MIN	WESTVACO
0.00165	0.00073	-7.21340
0.00331	0.00061	-7.39557
0.00496	0.00056	-7.47130
0.00661	0.00051	-7.56905
0.00827	0.00048	-7.62819
0.00992	0.00045	-7.67413
0.01157	0.00043	-7.72273
0.01323	0.00050	-7.57309
0.01488	0.00040	-7.77959
0.01653	0.00039	-7.80449
0.02066	0.00037	-7.85511
0.02480	0.00035	-7.89821
0.02893	0.00033	-7.94408
0.03306	0.00031	-7.98108
0.03720	0.00030	-8.00743
0.04133	0.00029	-8.03487
0.04546	0.00027	-8.07822
0.04960	0.00026	-8.10972
0.05373	0.00025	-8.12731
0.05786	0.00025	-8.14601
0.06199	0.00024	-8.16523
0.06613	0.00023	-8.18534
0.07026	0.00022	-8.20679
0.07439	0.00022	-8.21099
0.07853	0.00021	-8.23358
0.08266	0.00020	-8.25776
0.09093	0.00020	-8.26863
0.09919	0.00019	-8.28070
0.10746	0.00018	-8.29321
0.11572	0.00017	-8.30667
0.12399	0.00016	-8.34571
0.13226	0.00015	-8.36269

CARBON C-71-23

RUN NUMBER 153-G 5 18 71
TEMPERATURE = 150. DEG F

TOTAL FLOW RATE 1000.0 CC/MIN

PERCENT CO2 11.3
PERCENT O2 = 2.0
PERCENT H2O = 10.0

CONCENTRATION SO2 = 2500.0 PPM
CONCENTRATION NO = 150.0 PPM

PERCENT H2SO4 - 61.24
SATURATED LOADING - 0.38 GMS H2SO4/GM C

X, GMS H2SO4/GM C	RATE, GMS H2SO4/GM C-MIN	WESTVACO
0.00612	0.01781	-4.01109
0.00735	0.01597	-4.11778
0.00857	0.01413	-4.23692
0.00980	0.01252	-4.35403
0.01102	0.01098	-4.48222
0.01225	0.00962	-4.61166
0.01531	0.00671	-4.96351
0.01837	0.00439	-5.37840
0.02143	0.00341	-5.62217
0.02450	0.00276	-5.82593
0.02756	0.00246	-5.93345
0.03062	0.00225	-6.01221
0.03368	0.00207	-6.08960
0.03674	0.00201	-6.10691
0.03981	0.00196	-6.12182
0.04287	0.00192	-6.13417
0.04593	0.00188	-6.14532
0.04899	0.00185	-6.15358
0.05205	0.00182	-6.16207
0.05512	0.00179	-6.16748
0.05818	0.00176	-6.17466
0.06124	0.00174	-6.17869
0.06736	0.00170	-6.18346
0.07349	0.00166	-6.18848
0.07961	0.00161	-6.19369
0.08574	0.00157	-6.19919
0.09186	0.00153	-6.20880
0.09798	0.00148	-6.21491
0.10411	0.00144	-6.22551
0.11023	0.00138	-6.24095
0.11636	0.00134	-6.25291
0.12248	0.00129	-6.26564
0.13473	0.00118	-6.30348
0.14698	0.00108	-6.34157
0.15922	0.00097	-6.39168
0.17147	0.00087	-6.45090
0.18372	0.00075	-6.52975
0.19597	0.00064	-6.62742
0.20822	0.00054	-6.72976
0.22046	0.00046	-6.82285
0.23271	0.00038	-6.92790
0.24496	0.00033	-6.99276
0.25721	0.00028	-7.03374
0.26946	0.00025	-7.06207
0.28170	0.00023	-7.04480
0.29395	0.00021	-6.99403
0.30620	0.00019	-6.93017
0.31845	0.00017	-6.88200
0.33070	0.00015	-6.73429
0.34294	0.00014	-6.52882

CARBON C - 71 - 23

RUN NUMBER = 157 - G 5 31 71
TEMPERATURE = 200. DEG F

TOTAL FLOW RATE = 1000.0 CC/MIN

PERCENT CO2 = 11.3
PERCENT O2 = 2.0
PERCENT H2O = 15.0

CONCENTRATION SO2 = 2000.0 PPM
CONCENTRATION NO = 150.0 PPM

PERCENT H2SO4 = 67.91
SATURATED LOADING = 0.38 GMS H2SO4/GM C

X, GMS H2SO4/GM C	RATE, GMS H2SO4/GM C-MIN	WESTVACO
0.00272	0.00522	-5.24744
0.00407	0.00393	-5.52946
0.00543	0.00253	-5.96490
0.00679	0.00143	-6.53382
0.00815	0.00129	-6.63047
0.00951	0.00123	-6.67310
0.01087	0.00119	-6.70150
0.01222	0.00116	-6.72538
0.01358	0.00114	-6.73860
0.01698	0.00111	-6.75807
0.02037	0.00110	-6.75456
0.02377	0.00110	-6.75094
0.02716	0.00109	-6.74733
0.03056	0.00108	-6.74963
0.03395	0.00107	-6.74593
0.03735	0.00106	-6.74826
0.04075	0.00104	-6.75064
0.04414	0.00104	-6.74678
0.04754	0.00103	-6.74292
0.05093	0.00102	-6.74530
0.05433	0.00101	-6.74135
0.05772	0.00100	-6.74377
0.06112	0.00099	-6.74624
0.06451	0.00098	-6.74210
0.06791	0.00097	-6.74461
0.07470	0.00094	-6.74988
0.08149	0.00091	-6.75534
0.08828	0.00089	-6.76109
0.09507	0.00086	-6.76715
0.10186	0.00084	-6.77355
0.10866	0.00081	-6.78040
0.11545	0.00079	-6.78756
0.12224	0.00076	-6.79516
0.12903	0.00074	-6.79447
0.13582	0.00072	-6.79364
0.14940	0.00069	-6.78253
0.16298	0.00065	-6.78006
0.17657	0.00060	-6.78802
0.19015	0.00055	-6.80883
0.20373	0.00050	-6.83352
0.21731	0.00045	-6.86298

CARBON C - 71 - 23

RUN NUMBER = 158 - G 6 1 71
TEMPERATURE = 300. DEG F

TOTAL FLOW RATE = 1000.0 CC/MIN

PERCENT CO2 = 11.3
PERCENT O2 = 2.0
PERCENT H2O = 10.0

CONCENTRATION SO2 = 500.0 PPM
CONCENTRATION NO = 150.0 PPM

PERCENT H2SO4 - 77.62
SATURATED LOADING = 0.38 GMS H2SO4/GM C

X, GMS H2SO4/GM C	RATE, GMS H2SO4/GM C-MIN	WESTVACO
0.00155	0.00054	-7.52013
0.00310	0.00043	-7.74602
0.00466	0.00037	-7.89637
0.00621	0.00034	-7.97176
0.00776	0.00032	-8.03279
0.00931	0.00030	-8.08846
0.01087	0.00028	-8.13748
0.01242	0.00027	-8.18400
0.01397	0.00026	-8.22476
0.01552	0.00025	-8.26730
0.01940	0.00022	-8.35452
0.02329	0.00020	-8.43005
0.02717	0.00019	-8.49792
0.03105	0.00018	-8.55121
0.03493	0.00017	-8.60459
0.03881	0.00016	-8.65286
0.04269	0.00015	-8.69480
0.04657	0.00014	-8.73411
0.05045	0.00013	-8.77080
0.05433	0.00013	-8.79836
0.05821	0.00012	-8.82677
0.06210	0.00012	-8.85154
0.06598	0.00012	-8.87019
0.06986	0.00011	-8.89036
0.07374	0.00011	-8.91077
0.07762	0.00011	-8.93288
0.08538	0.00010	-8.96468
0.09314	0.00009	-9.00770
0.10091	0.00009	-9.03817
0.10867	0.00008	-9.07048
0.11643	0.00008	-9.10688
0.12419	0.00007	-9.13622
0.13195	0.00007	-9.16838
0.13972	0.00006	-9.20501
0.14748	0.00006	-9.24431

CARBON C - 71 - 23

RUN NUMBER = 160 - G 6 9 71
TEMPERATURE = 200. DEG F

TOTAL FLOW RATE = 1000.0 CC/MIN

PERCENT CO2 = 11.3
PERCENT O2 = 2.0
PERCENT H2O = 5.0

CONCENTRATION SO2 = 2000.0 PPM
CONCENTRATION NO = 150.0 PPM

PERCENT H2SO4 = 80.42
SATURATED LOADING = 0.38 GMS H2SO4/GM C

X, GMS H2SO4/GM C	RATE, GMS H2SO4/GM C-MIN	WESTVACO
0.00322	0.00306	-5.78171
0.00483	0.00215	-6.12897
0.00643	0.00152	-6.47148
0.00804	0.00110	-6.78822
0.00965	0.00094	-6.94636
0.01126	0.00083	-7.06719
0.01287	0.00073	-7.18421
0.01448	0.00067	-7.26979
0.01608	0.00061	-7.35121
0.02010	0.00054	-7.47732
0.02413	0.00050	-7.52672
0.02815	0.00049	-7.54711
0.03217	0.00047	-7.56841
0.03619	0.00046	-7.59069
0.04021	0.00045	-7.59632
0.04423	0.00043	-7.62014
0.04825	0.00043	-7.62645
0.05227	0.00042	-7.63295
0.05629	0.00041	-7.63965
0.06031	0.00040	-7.64658
0.06434	0.00039	-7.67393
0.06836	0.00038	-7.68174
0.07238	0.00037	-7.67922
0.07640	0.00037	-7.67665
0.08042	0.00036	-7.68483
0.08846	0.00035	-7.67960
0.09650	0.00035	-7.67411
0.10455	0.00034	-7.66832
0.11259	0.00033	-7.65039
0.12063	0.00033	-7.63169
0.12867	0.00033	-7.60020

CARBON C 71 - 73

RUN NUMBER = 161 - G 6 10 71
TEMPERATURE = 200. DEG F

TOTAL FLOW RATE = 1000.0 CC/MIN

PERCENT CO2 = 11.3
PERCENT O2 = 2.0
PERCENT H2O = 10.0

CONCENTRATION SO2 = 2000.0 PPM
CONCENTRATION NO = 300.0 PPM

PERCENT H2SO4 = 73.03
SATURATED LOADING = 0.38 GMS H2SO4/GM C

X, GMS H2SO4/GM C	RATE, GMS H2SO4/GM C-MIN	WESTVACO
0.00292	0.00597	-5.11272
0.00438	0.00429	-5.44042
0.00584	0.00308	-5.76787
0.00730	0.00198	-6.20578
0.00876	0.00125	-6.66451
0.01022	0.00105	-6.83348
0.01168	0.00095	-6.93254
0.01315	0.00087	-7.00929
0.01461	0.00084	-7.03945
0.01826	0.00081	-7.07388
0.02191	0.00078	-7.09138
0.02556	0.00076	-7.10956
0.02921	0.00075	-7.10892
0.03286	0.00074	-7.11809
0.03651	0.00073	-7.12745
0.04017	0.00072	-7.12698
0.04382	0.00070	-7.13672
0.04747	0.00070	-7.13634
0.05112	0.00070	-7.12530
0.05477	0.00069	-7.12467
0.05842	0.00069	-7.11338
0.06208	0.00068	-7.11262
0.06573	0.00068	-7.10107
0.06938	0.00067	-7.10026
0.07303	0.00067	-7.09933
0.08033	0.00066	-7.08626
0.08764	0.00065	-7.07283
0.09494	0.00064	-7.07029
0.10224	0.00062	-7.06751
0.10954	0.00062	-7.05278
0.11685	0.00060	-7.04942
0.12415	0.00059	-7.04600
0.13145	0.00057	-7.04239
0.13876	0.00056	-7.03858
0.14606	0.00054	-7.04811
0.16067	0.00049	-7.06938
0.17527	0.00045	-7.09426
0.18988	0.00040	-7.14204

CARBON C - 71 - 23

RUN NUMBER = 162 - G 6 11 71
TEMPERATURE = 200. DEG F

TOTAL FLOW RATE = 1000.0 CC/MIN

PERCENT CO2 = 11.3
PERCENT O2 = 2.0
PERCENT H2O = 10.0

CONCENTRATION SO2 = 2000.0 PPM
CONCENTRATION NO = 0.0 PPM

PERCENT H2SO4 = 74.59
SATURATED LOADING = 0.38 GMS H2SO4/GM C

X, GMS H2SO4/GM C	RATE, GMS H2SO4/GM C-MIN	WESTVACO
0.00149	0.00699	-4.95978
0.00298	0.00586	-5.13092
0.00448	0.00463	-5.36253
0.00597	0.00304	-5.77975
0.00746	0.00177	-6.31884
0.00895	0.00159	-6.41838
0.01044	0.00156	-6.43269
0.01193	0.00158	-6.41944
0.01343	0.00161	-6.39271
0.01492	0.00164	-6.37082
0.01865	0.00173	-6.30908
0.02238	0.00180	-6.25770
0.02611	0.00187	-6.21170
0.02984	0.00192	-6.17435
0.03357	0.00197	-6.13755
0.03729	0.00202	-6.10133
0.04475	0.00209	-6.04410
0.05221	0.00216	-5.99096
0.05967	0.00220	-5.94798
0.06713	0.00223	-5.91136
0.07459	0.00225	-5.87754
0.08205	0.00225	-5.85282
0.08951	0.00224	-5.83391
0.09697	0.00222	-5.81765
0.10443	0.00219	-5.80079
0.11186	0.00215	-5.79337
0.11934	0.00211	-5.78212
0.12680	0.00207	-5.77383
0.13426	0.00203	-5.76515
0.14172	0.00198	-5.75963
0.14918	0.00192	-5.75759
0.16410	0.00180	-5.75707
0.17902	0.00167	-5.76081
0.19393	0.00152	-5.77468
0.20885	0.00138	-5.79118
0.22377	0.00123	-5.81118
0.23869	0.00107	-5.84944
0.25361	0.00091	-5.90673
0.26852	0.00077	-5.94607
0.28344	0.00064	-5.97719
0.29836	0.00054	-5.99394
0.31328	0.00043	-6.00188
0.32820	0.00037	-5.91142

CARBON C - 71 - 23

RUN NUMBER = 163 - G 6 14 71
TEMPERATURE = 200. DEG F

TOTAL FLOW RATE = 1000.0 CC/MIN

PERCENT CO2 = 11.3
PERCENT O2 = 2.0
PERCENT H2O = 10.0

CONCENTRATION SO2 = 2000.0 PPM
CONCENTRATION NO = 50.0 PPM

PERCENT H2SO4 = 73.33
SATURATED LOADING = 0.38 GMS H2SO4/GM C

X, GMS H2SO4/GM C	RATE, GMS H2SO4/GM C-MIN	WESTVACO
0.00147	0.00305	-5.78759
0.00293	0.00251	-5.97820
0.00440	0.00205	-6.17923
0.00587	0.00166	-6.38323
0.00733	0.00137	-6.57505
0.00880	0.00126	-6.65564
0.01027	0.00118	-6.71235
0.01173	0.00112	-6.75963
0.01320.	0.00107	-6.80280
0.01467	0.00104	-6.83387
0.01833	0.00096	-6.89795
0.02200	0.00092	-6.92697
0.02567	0.00091	-6.93275
0.02933	0.00009	-9.25706
0.03300	0.00089	-6.93658
0.03666	0.00088	-6.93434
0.04033	0.00088	-6.92778
0.04400	0.00087	-6.92112
0.04766	0.00087	-6.91444
0.05133	0.00087	-6.90758
0.05500	0.00086	-6.90496
0.05866	0.00085	-6.90228
0.06233	0.00084	-6.89956
0.06600	0.00084	-6.89677
0.06966	0.00083	-6.88943
0.07333	0.00082	-6.89094
0.08066	0.00081	-6.88495
0.08800	0.00079	-6.87870
0.09533	0.00077	-6.88166
0.10266	0.00075	-6.87502
0.10999	0.00073	-6.87803
0.11733	0.00072	-6.87094
0.12466	0.00070	-6.87399
0.13199	0.00068	-6.86639
0.13933	0.00066	-6.86948
0.14666	0.00064	-6.87288
0.16133	0.00059	-6.88029
0.17599	0.00055	-6.88884
0.19066	0.00050	-6.91364
0.20532	0.00044	-6.94325

CARBON C - 71 - 23

RUN NUMBER = 164 - G 6 15 71
TEMPERATURE = 200. DEG F

TOTAL FLOW RATE = 1000.0 CC/MIN

PERCENT CO2 = 11.3
PERCENT O2 = 2.0
PERCENT H2O = 10.0

CONCENTRATION SO2 = 1000.0 PPM
CONCENTRATION NO = 150.0 PPM

PERCENT H2SO4 = 73.10
SATURATED LOADING = 0.38 GMS H2SO4/GM C

X, GMS H2SO4/GM C	RATE, GMS H2SO4/GM C-MIN	WESTVACO
0.00146	0.00181	-6.30935
0.00292	0.00125	-6.67460
0.00439	0.00081	-7.10333
0.00585	0.00071	-7.23687
0.00731	0.00066	-7.30837
0.00877	0.00062	-7.36403
0.01023	0.00060	-7.38447
0.01170	0.00059	-7.40551
0.01316	0.00057	-7.42717
0.01462	0.00057	-7.43624
0.01827	0.00054	-7.46659
0.02193	0.00054	-7.47022
0.02558	0.00052	-7.48813
0.02924	0.00051	-7.49215
0.03289	0.00051	-7.49627
0.03655	0.00050	-7.49306
0.04020	0.00050	-7.48236
0.04386	0.00050	-7.47898
0.04751	0.00050	-7.46805
0.05117	0.00050	-7.45700
0.05482	0.00050	-7.44582
0.05848	0.00050	-7.43451
0.06213	0.00050	-7.42308
0.06579	0.00050	-7.41152
0.06944	0.00050	-7.39982
0.07310	0.00050	-7.38798
0.08041	0.00049	-7.37891
0.08772	0.00048	-7.36947
0.09503	0.00048	-7.34414
0.10234	0.00048	-7.33366
0.10965	0.00047	-7.32272
0.11696	0.00047	-7.30328
0.12427	0.00046	-7.28312
0.13158	0.00045	-7.27038
0.13889	0.00045	-7.25704
0.14620	0.00043	-7.26015
0.16082	0.00042	-7.23066
0.17544	0.00040	-7.21668

APPENDIX A-3

COMPARISON OF WESTVACO MODEL TO EXPERIMENTAL SORPTION DATA

RUN NUMBER = 139 4 22 71

RATEC(I) = COEF * (1.-X(I)/XS) * (YSO2)**POWER
WHERE COEF = 0.01050
POWER = 0.40500
XS = 0.38000
YSO2 = 0.00200

X(I),GMS H2SO4/GM C	RATE, GMS H2SO4/GM C-MIN	CALCULATED RATE, GMS H2SO4/GM C-MIN	DIFF(I)
0.00294	0.0070602	0.0008409	0.0062193
0.00441	0.0051136	0.0008376	0.0042760
0.00589	0.0037625	0.0008343	0.0029282
0.00736	0.0021282	0.0008310	0.0012972
0.00883	0.0012857	0.0008277	0.0004579
0.01030	0.0010750	0.0008245	0.0002505
0.01177	0.0009443	0.0008212	0.0001231
0.01324	0.0008716	0.0008179	0.0000537
0.01472	0.0008208	0.0008146	0.0000062
0.01839	0.0007699	0.0008064	0.0000365
0.02207	0.0007627	0.0007982	0.0000356
0.02575	0.0007482	0.0007900	0.0000418
0.02943	0.0007409	0.0007818	0.0000409
0.03311	0.0007336	0.0007736	0.0000400
0.03679	0.0007264	0.0007654	0.0000390
0.04047	0.0007191	0.0007572	0.0000381
0.04415	0.0007118	0.0007490	0.0000372
0.04783	0.0007046	0.0007408	0.0000362
0.05151	0.0007009	0.0007326	0.0000316
0.05518	0.0006936	0.0007244	0.0000307
0.05886	0.0006900	0.0007162	0.0000261
0.06254	0.0006864	0.0007080	0.0000215
0.06622	0.0006827	0.0006998	0.0000170
0.06990	0.0006791	0.0006915	0.0000124
0.07358	0.0006755	0.0006833	0.0000078
0.08094	0.0006683	0.0006669	0.0000013
0.08830	0.0006610	0.0006505	0.0000104
0.09565	0.0006538	0.0006341	0.0000196
0.10301	0.0006465	0.0006177	0.0000288
0.11037	0.0006356	0.0006013	0.0000343
0.11773	0.0006247	0.0005849	0.0000398
0.12509	0.0006138	0.0005685	0.0000453
0.13244	0.0006028	0.0005521	0.0000508
0.13980	0.0005883	0.0005357	0.0000527
0.14715	0.0005775	0.0005193	0.0000582
0.16188	0.0005484	0.0004864	0.0000620
0.17659	0.0005230	0.0004536	0.0000694
0.19131	0.0004903	0.0004208	0.0000695

MEAN DEVIATION = 0.0000445 ROOT MEAN SQUARE DEVIATION = 0.0000618

RUN NUMBER = 140 4 23 71

RATEC(I) = COEF * (1.-X(I)/XS) * (YSO2)**POWER
WHERE COEF = 0.01050
POWER = 0.40500
XS = 0.38000
YSO2 = 0.00250

X(I),GMS H2SO4/GM C	RATE, GMS H2SO4/GM C-MIN	CALCULATED RATE, GMS H2SO4/GM C-MIN	DIFF(I)
0.00292	0.0045633	0.0009205	0.0036428
0.00437	0.0032855	0.0009169	0.0023686
0.00583	0.0015552	0.0009133	0.0006418
0.00729	0.0012923	0.0009098	0.0003825
0.00875	0.0011317	0.0009062	0.0002255
0.01021	0.0010258	0.0009027	0.0001232
0.01167	0.0009638	0.0008991	0.0000647
0.01312	0.0009163	0.0008956	0.0000208
0.01458	0.0008907	0.0008920	0.0000013
0.01823	0.0008433	0.0008831	0.0000398
0.02187	0.0008250	0.0008742	0.0000491
0.02552	0.0008141	0.0008653	0.0000512
0.02916	0.0008031	0.0008564	0.0000533
0.03281	0.0007922	0.0008475	0.0000553
0.03645	0.0007849	0.0008386	0.0000537
0.04010	0.0007776	0.0008297	0.0000521
0.04375	0.0007703	0.0008208	0.0000505
0.04739	0.0007630	0.0008119	0.0000489
0.05104	0.0007557	0.0008030	0.0000473
0.05468	0.0007520	0.0007941	0.0000421
0.05833	0.0007447	0.0007852	0.0000405
0.06197	0.0007374	0.0007763	0.0000389
0.06562	0.0007338	0.0007674	0.0000336
0.06926	0.0007265	0.0007585	0.0000320
0.07291	0.0007228	0.0007496	0.0000268
0.08020	0.0007119	0.0007318	0.0000199
0.08749	0.0006972	0.0007140	0.0000168
0.09478	0.0006899	0.0006962	0.0000063
0.10207	0.0006827	0.0006784	0.0000042
0.10936	0.0006717	0.0006606	0.0000111
0.11666	0.0006608	0.0006428	0.0000180
0.12395	0.0006461	0.0006250	0.0000211
0.13124	0.0006352	0.0006072	0.0000280
0.13853	0.0006206	0.0005894	0.0000312
0.14582	0.0006097	0.0005716	0.0000380
0.16040	0.0005804	0.0005360	0.0000444
0.17498	0.0005513	0.0005004	0.0000508

MEAN DEVIATION = 0.0000380 ROOT MEAN SQUARE DEVIATION = 0.0000441

RUN NUMBER = 141 4 26 71

RATEC(I) = COEF * (1.-X(I)/XS) * (YSO2)**POWER
WHERE COEF = 0.01050
POWER = 0.40500
XS = 0.38000
YSO2 = 0.00150

X(I),GMS H2SO4/GM C	RATE, GMS H2SO4/GM C-MIN	CALCULATED RATE, GMS H2SO4/GM C-MIN	DIFF(I)
0.00148	0.0051181	0.0007513	0.0043668
0.00296	0.0042197	0.0007484	0.0034713
0.00444	0.0023197	0.0007454	0.0015743
0.00592	0.0011415	0.0007425	0.0003990
0.00740	0.0009353	0.0007395	0.0001957
0.00888	0.0008359	0.0007366	0.0000993
0.01036	0.0007843	0.0007337	0.0000506
0.01184	0.0007511	0.0007307	0.0000204
0.01332	0.0007364	0.0007278	0.0000086
0.01480	0.0007253	0.0007249	0.0000004
0.01850	0.0007217	0.0007175	0.0000042
0.02220	0.0007106	0.0007102	0.0000005
0.02590	0.0007032	0.0007028	0.0000004
0.02960	0.0006959	0.0006955	0.0000004
0.03330	0.0006849	0.0006881	0.0000032
0.03700	0.0006775	0.0006808	0.0000033
0.04071	0.0006702	0.0006734	0.0000033
0.04441	0.0006628	0.0006661	0.0000033
0.04811	0.0006554	0.0006588	0.0000033
0.05181	0.0006480	0.0006514	0.0000034
0.05551	0.0006443	0.0006441	0.0000003
0.05921	0.0006407	0.0006367	0.0000040
0.06291	0.0006333	0.0006294	0.0000039
0.06661	0.0006260	0.0006220	0.0000039
0.07031	0.0006223	0.0006147	0.0000076
0.07401	0.0006149	0.0006073	0.0000075
0.08141	0.0006038	0.0005926	0.0000112
0.08881	0.0005928	0.0005780	0.0000149
0.09621	0.0005818	0.0005633	0.0000185
0.10361	0.0005671	0.0005486	0.0000185
0.11101	0.0005523	0.0005339	0.0000184
0.11842	0.0005339	0.0005192	0.0000147
0.12582	0.0005192	0.0005045	0.0000147
0.13322	0.0005008	0.0004898	0.0000109
0.14062	0.0004823	0.0004751	0.0000072
0.14802	0.0004640	0.0004604	0.0000035
0.16282	0.0004234	0.0004311	0.0000076
0.17762	0.0003866	0.0004017	0.0000151
0.19243	0.0003424	0.0003723	0.0000299

MEAN DEVIATION = 0.0000096 ROOT MEAN SQUARE DEVIATION = 0.0000140

RUN NUMBER = 142 4 27 71

RATEC(I) = COEF * (1.-X(I)/XS) * (YSO2)**POWER
WHERE COEF = 0.01050
POWER = 0.40500
XS = 0.38000
YSO2 = 0.00100

X(I),GMS H2SO4/GM C	RATE, GMS H2SO4/GM C-MIN	CALCULATED RATE, GMS H2SO4/GM C-MIN	DIFF(I)
0.00144	0.0050370	0.0006376	0.0043994
0.00288	0.0036817	0.0006352	0.0030465
0.00431	0.0021380	0.0006327	0.0015052
0.00575	0.0009639	0.0006303	0.0003336
0.00719	0.0008334	0.0006279	0.0002055
0.00863	0.0007573	0.0006255	0.0001318
0.01006	0.0007067	0.0006231	0.0000836
0.01150	0.0006740	0.0006206	0.0000534
0.01294	0.0006559	0.0006182	0.0000377
0.01438	0.0006522	0.0006158	0.0000364
0.01797	0.0006414	0.0006097	0.0000316
0.02156	0.0006341	0.0006037	0.0000304
0.02516	0.0006233	0.0005976	0.0000256
0.02875	0.0006160	0.0005916	0.0000244
0.03235	0.0006088	0.0005855	0.0000232
0.03594	0.0006016	0.0005795	0.0000221
0.03953	0.0005943	0.0005734	0.0000209
0.04313	0.0005870	0.0005674	0.0000197
0.04672	0.0005798	0.0005613	0.0000185
0.05032	0.0005762	0.0005553	0.0000209
0.05391	0.0005689	0.0005492	0.0000197
0.05750	0.0005617	0.0005432	0.0000185
0.06110	0.0005581	0.0005371	0.0000210
0.06469	0.0005508	0.0005311	0.0000198
0.06829	0.0005436	0.0005250	0.0000186
0.07188	0.0005400	0.0005189	0.0000210
0.07907	0.0005290	0.0005068	0.0000222
0.08626	0.0005182	0.0004947	0.0000234
0.09344	0.0005073	0.0004826	0.0000247
0.10063	0.0004965	0.0004705	0.0000260
0.10782	0.0004855	0.0004584	0.0000271
0.11501	0.0004747	0.0004463	0.0000284
0.12220	0.0004638	0.0004342	0.0000296
0.12938	0.0004493	0.0004221	0.0000272
0.13657	0.0004349	0.0004100	0.0000249
0.14376	0.0004204	0.0003979	0.0000225
0.15814	0.0003914	0.0003737	0.0000177
0.17251	0.0003623	0.0003495	0.0000129

MEAN DEVIATION = 0.0000267 ROOT MEAN SQUARE DEVIATION = 0.0000295

RUN NUMBER = 138 -G 4 21 71

RATEC(I)= COEF * (1-X(I)/72) * Y2O2**.4) * (YO2**.63) * (YH2O**.73)
WHERE COEF= .000159 * EXP(5520*(1/(T+460)))
XS= 0.38000 T= 200.00000
YSO2= 0.00200 YO2= 0.00700
YH2O= 0.10000

X(I),GMS H2SO4/GM C	RATE, GMS H2SO4/GM C-MIN	CALCULATED RATE, GMS H2SO4/GM C-MIN	DIFF(I)
0.00145	0.0024220	0.0004622	0.0019598
0.00290	0.0017513	0.0004604	0.0012908
0.00435	0.0012296	0.0004587	0.0007710
0.00580	0.0008421	0.0004569	0.0003852
0.00725	0.0006185	0.0004551	0.0001634
0.00870	0.0005291	0.0004534	0.0000757
0.01015	0.0005068	0.0004516	0.0000552
0.01160	0.0004918	0.0004498	0.0000420
0.01305	0.0004844	0.0004480	0.0000363
0.01450	0.0004770	0.0004463	0.0000307
0.01813	0.0004620	0.0004418	0.0000202
0.02175	0.0004546	0.0004374	0.0000171
0.02538	0.0004397	0.0004330	0.0000067
0.02900	0.0004248	0.0004286	0.0000038
0.03263	0.0004173	0.0004241	0.0000068
0.03625	0.0004099	0.0004197	0.0000098
0.03988	0.0003987	0.0004153	0.0000166
0.04351	0.0003913	0.0004109	0.0000196
0.04713	0.0003875	0.0004064	0.0000189
0.05076	0.0003801	0.0004020	0.0000219
0.05438	0.0003763	0.0003976	0.0000213
0.05801	0.0003726	0.0003932	0.0000205
0.06163	0.0003689	0.0003887	0.0000199
0.06526	0.0003689	0.0003843	0.0000154
0.06888	0.0003652	0.0003799	0.0000147
0.07251	0.0003652	0.0003754	0.0000103
0.07976	0.0003615	0.0003666	0.0000051
0.08701	0.0003577	0.0003577	0.0000000
0.09426	0.0003540	0.0003489	0.0000051
0.10151	0.0003540	0.0003400	0.0000140
0.10876	0.0003540	0.0003312	0.0000228
0.11602	0.0003502	0.0003223	0.0000279

MEAN DEVIATION = 0.0000186 ROOT MEAN SQUARE DEVIATION = 0.0000222
RESIDUAL SUM OF SQUARES = 0.12850E-07
MEAN PERCENT DEVIATION = 4.4846611

RUN NUMBER = 143 4 28 71

RATEC(I) = COEF * (1.-X(I)/XS) * (YSO2)**POWER
WHERE COEF = 0.01050
POWER = 0.40500
XS = 0.38000
YSO2 = 0.00050

X(I),GMS H2SO4/GM C	RATE, GMS H2SO4/GM C-MIN	CALCULATED RATE, GMS H2SO4/GM C-MIN	DIFF(I)
0.00145	0.0033683	0.0004815	0.0028868
0.00290	0.0021586	0.0004797	0.0016789
0.00435	0.0010503	0.0004778	0.0005725
0.00580	0.0008330	0.0004760	0.0003570
0.00724	0.0006990	0.0004741	0.0002249
0.00869	0.0005157	0.0004723	0.0001434
0.01014	0.0005577	0.0004705	0.0000873
0.01159	0.0005216	0.0004686	0.0000530
0.01304	0.0004962	0.0004668	0.0000294
0.01449	0.0004817	0.0004649	0.0000168
0.01811	0.0004745	0.0004603	0.0000142
0.02173	0.0004636	0.0004557	0.0000079
0.02536	0.0004564	0.0004511	0.0000053
0.02898	0.0004527	0.0004465	0.0000062
0.03260	0.0004455	0.0004419	0.0000036
0.03622	0.0004382	0.0004373	0.0000010
0.03985	0.0004346	0.0004327	0.0000020
0.04347	0.0004310	0.0004281	0.0000029
0.04709	0.0004238	0.0004235	0.0000003
0.05071	0.0004201	0.0004189	0.0000013
0.05434	0.0004165	0.0004142	0.0000023
0.05796	0.0004129	0.0004096	0.0000033
0.06158	0.0004093	0.0004050	0.0000042
0.06520	0.0004056	0.0004004	0.0000052
0.06883	0.0004020	0.0003958	0.0000062
0.07245	0.0003984	0.0003912	0.0000072
0.07969	0.0003948	0.0003820	0.0000128
0.08694	0.0003875	0.0003728	0.0000148
0.09418	0.0003803	0.0003636	0.0000167
0.10143	0.0003730	0.0003543	0.0000187
0.10867	0.0003658	0.0003451	0.0000207
0.11592	0.0003586	0.0003359	0.0000226
0.12316	0.0003477	0.0003267	0.0000210
0.13041	0.0003404	0.0003175	0.0000230
0.13765	0.0003332	0.0003083	0.0000249
0.14490	0.0003223	0.0002990	0.0000233
0.15939	0.0003006	0.0002806	0.0000200

MEAN DEVIATION = 0.0000154 ROOT MEAN SQUARE DEVIATION = 0.0000231

RUN NUMBER = 139 -G 4 22 71

RATEC(I)= COEF * (1-X(I)/72) * Y2O2**.4) * (YO2**.63) * (YH2O**.73)
WHERE COEF= .000159 * EXP(5520*(1/(T+460)))
XS= 0.38000 T= 200.00000
YSO2= 0.00200 YO2= 0.02000
YH2O= 0.10000

X(I),GMS H2SO4/GM C	RATE, GMS H2SO4/GM C-MIN	CALCULATED RATE, GMS H2SO4/GM C-MIN	DIFF(I)
0.00294	0.0070602	0.0008920	0.0061682
0.00441	0.0051136	0.0008885	0.0042251
0.00599	0.0037625	0.0008850	0.0028775
0.00736	0.0021282	0.0008815	0.0012467
0.00883	0.0012857	0.0008781	0.0004076
0.01030	0.0010750	0.0008746	0.0002004
0.01177	0.0009443	0.0008711	0.0000731
0.01324	0.0008716	0.0008676	0.0000040
0.01472	0.0008208	0.0008641	0.0000434
0.01839	0.0007699	0.0008554	0.0000855
0.02207	0.0007627	0.0008467	0.0000841
0.02575	0.0007482	0.0008380	0.0000899
0.02943	0.0007409	0.0008293	0.0000885
0.03311	0.0007336	0.0008206	0.0000870
0.03679	0.0007264	0.0008119	0.0000855
0.04047	0.0007191	0.0008032	0.0000841
0.04415	0.0007118	0.0007945	0.0000827
0.04783	0.0007046	0.0007858	0.0000812
0.05151	0.0007009	0.0007771	0.0000762
0.05518	0.0006936	0.0007684	0.0000748
0.05886	0.0006900	0.0007597	0.0000697
0.06254	0.0006864	0.0007510	0.0000646
0.06622	0.0006827	0.0007422	0.0000595
0.06990	0.0006791	0.0007336	0.0000544
0.07358	0.0006755	0.0007249	0.0000494
0.08094	0.0006683	0.0007075	0.0000392
0.08830	0.0006610	0.0006901	0.0000291
0.09565	0.0006538	0.0006727	0.0000189
0.10301	0.0006465	0.0006553	0.0000088
0.11037	0.0006356	0.0006379	0.0000023
0.11773	0.0006247	0.0006205	0.0000042
0.12509	0.0006138	0.0006030	0.0000108
0.13244	0.0006028	0.0005856	0.0000172
0.13980	0.0005883	0.0005682	0.0000201
0.14716	0.0005775	0.0005508	0.0000266
0.16188	0.0005484	0.0005160	0.0000324
0.17659	0.0005230	0.0004812	0.0000418
0.19131	0.0004903	0.0004464	0.0000439

MEAN DEVIATION = 0.0000556 ROOT MEAN SQUARE DEVIATION = 0.0000678
RESIDUAL SUM OF SQUARES = 0.15159E-06
MEAN PERCENT DEVIATION = 7.6649351

RUN NUMBER = 140-G 4 23 71

RATEC(I)= COEF * (1-X(I)/72) * Y2O2**.4) * (YO2**.63) * (YH2O**.73)
WHERE COEF= .000159 * EXP(5520*(1/(T+460)))
XS= 0.38000 T= 200.00000
YSO2= 0.00250 YO2= 0.02000
YH2O= 0.10000

X(I),GMS H2SO4/GM.C	RATE, GMS.H2SO4/GM.C-MIN	CALCULATED RATE, GMS.H2SO4/GM.C-MIN	DIFF(I)
0.00292	0.0045633	0.0009753	0.0035879
0.00437	0.0032855	0.0009716	0.0023140
0.00583	0.0015552	0.0009678	0.0005874
0.00729	0.0012923	0.0009640	0.0003283
0.00875	0.0011317	0.0009603	0.0001715
0.01021	0.0010258	0.0009565	0.0000694
0.01167	0.0009638	0.0009527	0.0000111
0.01312	0.0009163	0.0009489	0.0000326
0.01458	0.0008907	0.0009452	0.0000544
0.01823	0.0008433	0.0009357	0.0000925
0.02187	0.0008250	0.0009263	0.0001013
0.02552	0.0008141	0.0009169	0.0001028
0.02916	0.0008031	0.0009075	0.0001043
0.03281	0.0007922	0.0008980	0.0001059
0.03645	0.0007849	0.0008886	0.0001037
0.04010	0.0007776	0.0008792	0.0001016
0.04375	0.0007703	0.0008697	0.0000994
0.04739	0.0007630	0.0008603	0.0000973
0.05104	0.0007557	0.0008509	0.0000952
0.05468	0.0007520	0.0008414	0.0000895
0.05833	0.0007447	0.0008320	0.0000873
0.06197	0.0007374	0.0008226	0.0000852
0.06562	0.0007338	0.0008132	0.0000794
0.06926	0.0007265	0.0008037	0.0000773
0.07291	0.0007228	0.0007943	0.0000715
0.08020	0.0007119	0.0007754	0.0000635
0.08749	0.0006972	0.0007566	0.0000593
0.09478	0.0006899	0.0007377	0.0000478
0.10207	0.0006827	0.0007189	0.0000362
0.10936	0.0006717	0.0007000	0.0000283
0.11666	0.0006608	0.0006811	0.0000204
0.12395	0.0006461	0.0006623	0.0000162
0.13124	0.0006352	0.0006434	0.0000082
0.13853	0.0006206	0.0006246	0.0000040
0.14582	0.0006097	0.0006057	0.0000040
0.16040	0.0005804	0.0005680	0.0000124
0.17498	0.0005513	0.0005303	0.0000210

MEAN DEVIATION = 0.0000620 ROOT MEAN SQUARE DEVIATION = 0.0000715
RESIDUAL SUM OF SQUARES = 0.16349E-06
MEAN PERCENT DEVIATION = 8.0887070

RUN NUMBER = 141-G 4 26 71

RATEC(I)= COEF * (1-X(I)/72) * Y2O2**.4) * (YO2**.63) * (YH2O**.73)
WHERE COEF= .000159 * EXP(5520*(1/(T+460)))
XS= 0.38000 T= 200.00000
YSO2= 0.00150 YO2= 0.02000
YH2O= 0.10000

X(I),GMS H2SO4/GM C	RATE, GMS H2SO4/GM C-MIN	CALCULATED RATE, GMS H2SO4/GM C-MIN	DIFF(I)
0.00148	0.0051181	0.0007981	0.0043200
0.00296	0.0042197	0.0007950	0.0034247
0.00444	0.0023197	0.0007919	0.0015278
0.00592	0.0011415	0.0007888	0.0003527
0.00740	0.0009353	0.0007856	0.0001496
0.00888	0.0008359	0.0007825	0.0000534
0.01036	0.0007843	0.0007794	0.0000049
0.01184	0.0007511	0.0007763	0.0000251
0.01332	0.0007364	0.0007732	0.0000368
0.01480	0.0007253	0.0007700	0.0000447
0.01850	0.0007217	0.0007622	0.0000406
0.02220	0.0007106	0.0007544	0.0000438
0.02590	0.0007032	0.0007466	0.0000434
0.02960	0.0006959	0.0007388	0.0000429
0.03330	0.0006849	0.0007310	0.0000461
0.03700	0.0006775	0.0007232	0.0000457
0.04071	0.0006702	0.0007154	0.0000453
0.04441	0.0006628	0.0007076	0.0000449
0.04811	0.0006554	0.0006998	0.0000444
0.05181	0.0006480	0.0006920	0.0000440
0.05551	0.0006443	0.0006842	0.0000399
0.05921	0.0006407	0.0006764	0.0000357
0.06291	0.0006333	0.0006686	0.0000353
0.06661	0.0006260	0.0006608	0.0000348
0.07031	0.0006223	0.0006530	0.0000307
0.07401	0.0006149	0.0006452	0.0000303
0.08141	0.0006038	0.0006296	0.0000257
0.08881	0.0005928	0.0006140	0.0000212
0.09621	0.0005818	0.0005984	0.0000166
0.10361	0.0005671	0.0005828	0.0000157
0.11101	0.0005523	0.0005672	0.0000148
0.11842	0.0005339	0.0005516	0.0000176
0.12582	0.0005192	0.0005360	0.0000168
0.13322	0.0005008	0.0005203	0.0000196
0.14062	0.0004823	0.0005047	0.0000224
0.14802	0.0004640	0.0004891	0.0000252
0.16282	0.0004234	0.0004579	0.0000345
0.17762	0.0003866	0.0004267	0.0000401
0.19243	0.0003424	0.0003955	0.0000531

MEAN DEVIATION = 0.0000328 ROOT MEAN SQUARE DEVIATION = 0.0000349
RESIDUAL SUM OF SQUARES = 0.40235E-07
MEAN PERCENT DEVIATION = 5.5525713

RUN NUMBER = 142-G 4 27 71

RATEC(I)= COEF * (1-X(I)/72) * Y2O2**.4) * (YO2**.63) * (YH2O**.73)
WHERE COEF= .000159 * EXP(5520*(1/(T+460)))
XS= 0.38000 T= 200.00000
YSO2= 0.00100 YO2= 0.02000
YH2O= 0.10000

X(I),GMS.H2SO4/GM.C	RATE, GMS.H2SO4/GM.C-MIN	CALCULATED RATE, GMS.H2SO4/GM.C-MIN	DIFF(I)
0.00144	0.0050370	0.0006787	0.0043583
0.00288	0.0036817	0.0006761	0.0030056
0.00431	0.0021380	0.0006735	0.0014644
0.00575	0.0009639	0.0006710	0.0002929
0.00719	0.0008334	0.0006684	0.0001651
0.00863	0.0007573	0.0006658	0.0000915
0.01006	0.0007067	0.0006632	0.0000434
0.01150	0.0006740	0.0006607	0.0000134
0.01294	0.0006559	0.0006581	0.0000022
0.01438	0.0006522	0.0006555	0.0000033
0.01797	0.0006414	0.0006491	0.0000077
0.02156	0.0006341	0.0006426	0.0000085
0.02516	0.0006233	0.0006362	0.0000129
0.02875	0.0006160	0.0006297	0.0000137
0.03235	0.0006088	0.0006233	0.0000145
0.03594	0.0006016	0.0006168	0.0000153
0.03953	0.0005943	0.0006104	0.0000161
0.04313	0.0005870	0.0006040	0.0000169
0.04672	0.0005798	0.0005975	0.0000177
0.05032	0.0005762	0.0005911	0.0000149
0.05391	0.0005689	0.0005846	0.0000157
0.05750	0.0005617	0.0005782	0.0000165
0.06110	0.0005581	0.0005717	0.0000137
0.06469	0.0005508	0.0005653	0.0000145
0.06829	0.0005436	0.0005589	0.0000153
0.07188	0.0005400	0.0005524	0.0000124
0.07907	0.0005290	0.0005395	0.0000105
0.08626	0.0005182	0.0005266	0.0000085
0.09344	0.0005073	0.0005138	0.0000064
0.10063	0.0004965	0.0005009	0.0000044
0.10782	0.0004855	0.0004880	0.0000024
0.11501	0.0004747	0.0004751	0.0000004
0.12220	0.0004638	0.0004622	0.0000016
0.12938	0.0004493	0.0004493	0.0000000
0.13657	0.0004349	0.0004364	0.0000016
0.14376	0.0004204	0.0004235	0.0000032
0.15814	0.0003914	0.0003978	0.0000064
0.17251	0.0003623	0.0003720	0.0000096

MEAN DEVIATION = 0.0000107 ROOT MEAN SQUARE DEVIATION = 0.0000135
RESIDUAL SUM OF SQUARES = 0.57925E-08
MEAN PERCENT DEVIATION = 1.8738451

RUN NUMBER = 143-G 4 28 71

RATEC(I)= COEF * (1-X(I)/72) * Y2O2**.4) * (YO2**.63) * (YH2O**.73)
WHERE COEF= .000159 * EXP(5520*(1/(T+460)))
XS= 0.38000 T= 200.00000
YSO2= 0.00050 YO2= 0.02000
YH2O= 0.10000

X(I),GMS H2SO4/GM C	RATE, GMS H2SO4/GM C-MIN	CALCULATED RATE, GMS H2SO4/GM C-MIN	DIFF(I
0.00145	0.0033683	0.0005143	0.0028539
0.00290	0.0021586	0.0005124	0.0016462
0.00435	0.0010503	0.0005104	0.0005399
0.00580	0.0008330	0.0005084	0.0003246
0.00724	0.0006990	0.0005065	0.0001925
0.00869	0.0006157	0.0005045	0.0001112
0.01014	0.0005577	0.0005025	0.0000552
0.01159	0.0005216	0.0005006	0.0000210
0.01304	0.0004962	0.0004986	0.0000024
0.01449	0.0004817	0.0004966	0.0000149
0.01811	0.0004745	0.0004917	0.0000172
0.02173	0.0004636	0.0004868	0.0000232
0.02536	0.0004564	0.0004819	0.0000255
0.02898	0.0004527	0.0004769	0.0000242
0.03260	0.0004455	0.0004720	0.0000265
0.03622	0.0004382	0.0004671	0.0000288
0.03985	0.0004346	0.0004622	0.0000275
0.04347	0.0004310	0.0004573	0.0000262
0.04709	0.0004238	0.0004523	0.0000286
0.05071	0.0004201	0.0004474	0.0000273
0.05434	0.0004165	0.0004425	0.0000260
0.05796	0.0004129	0.0004376	0.0000247
0.06158	0.0004093	0.0004326	0.0000234
0.06520	0.0004056	0.0004277	0.0000221
0.06883	0.0004020	0.0004228	0.0000208
0.07245	0.0003984	0.0004179	0.0000195
0.07969	0.0003948	0.0004080	0.0000133
0.08694	0.0003875	0.0003932	0.0000107
0.09418	0.0003803	0.0003883	0.0000081
0.10143	0.0003730	0.0003785	0.0000055
0.10867	0.0003658	0.0003687	0.0000029
0.11592	0.0003586	0.0003588	0.0000003
0.12316	0.0003477	0.0003490	0.0000013
0.13041	0.0003404	0.0003391	0.0000013
0.13765	0.0003332	0.0003293	0.0000039
0.14490	0.0003223	0.0003194	0.0000029
0.15939	0.0003006	0.0002997	0.0000008

MEAN DEVIATION = 0.0000173 ROOT MEAN SQUARE DEVIATION = 0.0000212
RESIDUAL SUM OF SQUARES = 0.13874E-07
MEAN PERCENT DEVIATION = 3.9458342

RUN NUMBER = 144-G 4 29 71

RATEC(I)= COEF * (1-X(I)/72) * Y2O2**.4) * (YO2**.63) * (YH2O**.73)
WHERE COEF= .000159 * EXP(5520*(1/(T+460)))
XS= 0.38000 T= 200.00000
YSO2= 0.00200 YO2= 0.03500
YH2O= 0.10000

X(I),GMS H2SO4/GM C	RATE, GMS H2SO4/GM C-MIN	CALCULATED RATE, GMS H2SO4/GM C-MIN	DIFF(I)
0.00293	0.0053489	0.0012691	0.0040798
0.00440	0.0037517	0.0012641	0.0024876
0.00586	0.0025259	0.0012592	0.0012667
0.00733	0.0015452	0.0012543	0.0002910
0.00880	0.0014264	0.0012493	0.0001771
0.01026	0.0013558	0.0012444	0.0001114
0.01173	0.0013001	0.0012395	0.0000606
0.01320	0.0012518	0.0012345	0.0000172
0.01466	0.0012035	0.0012296	0.0000261
0.01833	0.0011367	0.0012173	0.0000806
0.02199	0.0010995	0.0012049	0.0001054
0.02566	0.0010810	0.0011926	0.0001116
0.02932	0.0010698	0.0011803	0.0001104
0.03299	0.0010623	0.0011679	0.0001056
0.03665	0.0010549	0.0011556	0.0001006
0.04032	0.0010474	0.0011432	0.0000959
0.04399	0.0010400	0.0011309	0.0000909
0.04765	0.0010326	0.0011186	0.0000859
0.05132	0.0010252	0.0011062	0.0000810
0.05498	0.0010215	0.0010939	0.0000724
0.05865	0.0010178	0.0010816	0.0000638
0.06231	0.0010141	0.0010692	0.0000551
0.06598	0.0010066	0.0010569	0.0000503
0.06964	0.0010030	0.0010445	0.0000416
0.07331	0.0009992	0.0010322	0.0000330
0.08064	0.0009918	0.0010075	0.0000157
0.08797	0.0009843	0.0009829	0.0000015
0.09530	0.0009769	0.0009582	0.0000187
0.10263	0.0009658	0.0009335	0.0000323
0.10996	0.0009509	0.0009088	0.0000421
0.11730	0.0009398	0.0008842	0.0000556
0.12463	0.0009212	0.0008595	0.0000617
0.13196	0.0008989	0.0008348	0.0000641
0.13929	0.0008766	0.0008101	0.0000665
0.14662	0.0008544	0.0007855	0.0000689
0.16128	0.0008060	0.0007361	0.0000699
0.17594	0.0007577	0.0006868	0.0000710
0.19061	0.0007058	0.0006374	0.0000683
0.20527	0.0006538	0.0005881	0.0000657

MEAN DEVIATION = 0.0000647 ROOT MEAN SQUARE DEVIATION = 0.0000712
RESIDUAL SUM OF SQUARES = 0.17218E-06
MEAN PERCENT DEVIATION = 6.5631914

RUN NUMBER = 145-G 4 30 71

RATEC(I)= COEF * (1-X(I)/72) * Y2O2**.4) * (YO2**.63) * (YH2O**.73)
WHERE COEF= .000159 * EXP(5520*(1/(T+460)))
XS= 0.38000 T= 200.00000
YSO2= 0.00200 YO2= 0.02000
YH2O= 0.10000

X(I),GMS H2SO4/GM C	RATE, GMS H2SO4/GM C-MIN	CALCULATED RATE, GMS H2SO4/GM C-MIN	DIFF(I)
0.00290	0.0064766	0.0008921	0.0055845
0.00436	0.0051454	0.0008887	0.0042566
0.00581	0.0037780	0.0008852	0.0028928
0.00726	0.0026626	0.0008818	0.0017808
0.00871	0.0014752	0.0008783	0.0005969
0.01017	0.0010650	0.0008749	0.0001901
0.01162	0.0010218	0.0008715	0.0001504
0.01307	0.0009931	0.0008680	0.0001250
0.01452	0.0009715	0.0008646	0.0001069
0.01815	0.0009319	0.0008560	0.0000759
0.02178	0.0009031	0.0008474	0.0000557
0.02541	0.0008816	0.0008388	0.0000427
0.02904	0.0008635	0.0008302	0.0000333
0.03267	0.0008455	0.0008217	0.0000239
0.03630	0.0008312	0.0008131	0.0000181
0.03994	0.0008203	0.0008045	0.0000159
0.04357	0.0008096	0.0007959	0.0000137
0.04720	0.0007988	0.0007873	0.0000115
0.05083	0.0007916	0.0007787	0.0000129
0.05446	0.0007844	0.0007701	0.0000143
0.05809	0.0007772	0.0007615	0.0000157
0.06172	0.0007700	0.0007530	0.0000171
0.06535	0.0007628	0.0007444	0.0000184
0.06898	0.0007556	0.0007358	0.0000198
0.07261	0.0007520	0.0007272	0.0000248
0.07987	0.0007412	0.0007100	0.0000312
0.08713	0.0007268	0.0006928	0.0000340
0.09439	0.0007124	0.0006757	0.0000368
0.10165	0.0006980	0.0006585	0.0000395
0.10891	0.0006764	0.0006413	0.0000351
0.11618	0.0006621	0.0006241	0.0000379
0.12344	0.0006405	0.0006069	0.0000335
0.13070	0.0006225	0.0005898	0.0000327
0.13796	0.0006009	0.0005726	0.0000283
0.14522	0.0005793	0.0005554	0.0000239
0.15974	0.0005362	0.0005211	0.0000151
0.17426	0.0004893	0.0004867	0.0000026

MEAN DEVIATION = 0.0000418 ROOT MEAN SQUARE DEVIATION = 0.0000594
RESIDUAL SUM OF SQUARES = 0.11287E-06
MEAN PERCENT DEVIATION = 4.9554749

RUN NUMBER = 148 -C 5 7 71

RATEC(I)= COEF * (1-X(I)/72) * Y2O2**.4) * (YO2**.63) * (YH2O**.73)
WHERE COEF= .000159 * EXP(5520*(1/(T+460)))
XS= 0.38000 T= 150.00000
YSO2= 0.00250 YO2= 0.02000
YH2O= 0.10000

X(I),GMS H2SO4/GM C	RATE, GMS H2SO4/GM C-MIN	CALCULATED RATE, GMS H2SO4/GM C-MIN	DIFF(I)
0.00229	0.0216960	0.0019391	0.0197568
0.00343	0.0199966	0.0019333	0.0180633
0.00457	0.0184388	0.0019274	0.0165114
0.00572	0.0170509	0.0019215	0.0151294
0.00686	0.0157197	0.0019156	0.0138040
0.00801	0.0144734	0.0019098	0.0125637
0.00915	0.0133122	0.0019039	0.0114083
0.01029	0.0122359	0.0018980	0.0103378
0.01144	0.0112162	0.0018922	0.0093240
0.01429	0.0087520	0.0018775	0.0068745
0.01715	0.0067127	0.0018628	0.0048499
0.02001	0.0051266	0.0018481	0.0032785
0.02287	0.0041636	0.0018335	0.0023302
0.02573	0.0038010	0.0018188	0.0019823
0.02859	0.0035122	0.0018041	0.0017081
0.03145	0.0032573	0.0017894	0.0014678
0.03431	0.0030307	0.0017747	0.0012559
0.03717	0.0028324	0.0017601	0.0010723
0.04003	0.0026908	0.0017454	0.0009454
0.04288	0.0025718	0.0017307	0.0008411
0.04574	0.0024755	0.0017160	0.0007595
0.04860	0.0023849	0.0017014	0.0006835
0.05146	0.0022999	0.0016867	0.0006132
0.05432	0.0022262	0.0016720	0.0005542
0.05718	0.0021583	0.0016573	0.0005009
0.06290	0.0020337	0.0016280	0.0004057
0.06862	0.0019090	0.0015986	0.0003104
0.07433	0.0017957	0.0015693	0.0002265
0.08005	0.0016938	0.0015399	0.0001539
0.08577	0.0015974	0.0015105	0.0000869
0.09149	0.0015068	0.0014812	0.0000256
0.09721	0.0014218	0.0014518	0.0000300
0.10292	0.0013312	0.0014225	0.0000913
0.10864	0.0012457	0.0013931	0.0001475
0.11436	0.0011669	0.0013638	0.0001968
0.12580	0.0010196	0.0013051	0.0002854
0.13723	0.0008894	0.0012463	0.0003570
0.14867	0.0007760	0.0011876	0.0004116
0.16010	0.0006798	0.0011289	0.0004492
0.17154	0.0005948	0.0010702	0.0004754
0.18298	0.0005155	0.0010115	0.0004960
0.19441	0.0004362	0.0009528	0.0005166
0.20585	0.0003682	0.0008941	0.0005259
0.21728	0.0003059	0.0008354	0.0005295

MEAN DEVIATION = 0.0014892 ROOT MEAN SQUARE DEVIATION = 0.0028397
RESIDUAL SUM OF SQUARES = 0.29836E-03
MEAN PERCENT DEVIATION = 47.7267456

RUN NUMBER = 149-G 5 10 71

RATEC(I)= COEF * (1-X(I)/72) * Y2O2**.4) * (YO2**.63) * (YH2O**.73)
WHERE COEF= .000159 * EXP(5520*(1/(T+460)))
XS= 0.38000 T= 150.00000
YSO2= 0.00150 YO2= 0.02000
YH2O= 0.10000

X(I),GMS H2SO4/GM C	RATE, GMS H2SO4/GM C-MIN	CALCULATED RATE, GMS H2SO4/GM C-MIN	DIFF(I)
0.00569	0.0151080	0.0015665	0.0135414
0.00682	0.0137051	0.0015618	0.0121433
0.00796	0.0124101	0.0015570	0.0108531
0.00910	0.0112231	0.0015523	0.0096708
0.01023	0.0101979	0.0015475	0.0086504
0.01137	0.0092536	0.0015427	0.0077109
0.01421	0.0071223	0.0015308	0.0055915
0.01706	0.0054766	0.0015189	0.0039577
0.01990	0.0042356	0.0015071	0.0027286
0.02274	0.0034802	0.0014952	0.0019851
0.02559	0.0029137	0.0014833	0.0014304
0.02843	0.0025899	0.0014714	0.0011186
0.03127	0.0021960	0.0014595	0.0007366
0.03412	0.0020234	0.0014476	0.0005759
0.03696	0.0019041	0.0014357	0.0004685
0.03980	0.0018211	0.0014238	0.0003973
0.04264	0.0017563	0.0014119	0.0003444
0.04549	0.0017131	0.0014000	0.0003132
0.04833	0.0016781	0.0013881	0.0002900
0.05117	0.0016430	0.0013762	0.0002668
0.05402	0.0016106	0.0013643	0.0002463
0.05686	0.0015783	0.0013524	0.0002259
0.06255	0.0015162	0.0013286	0.0001876
0.06823	0.0014569	0.0013048	0.0001521
0.07392	0.0014029	0.0012810	0.0001219
0.07960	0.0013516	0.0012572	0.0000944
0.08529	0.0013058	0.0012334	0.0000724
0.09098	0.0012518	0.0012096	0.0000422
0.09666	0.0011979	0.0011858	0.0000121
0.10235	0.0011439	0.0011620	0.0000181
0.10803	0.0010872	0.0011382	0.0000510
0.11372	0.0010279	0.0011144	0.0000866
0.12509	0.0009065	0.0010668	0.0001604
0.13646	0.0007878	0.0010192	0.0002314
0.14784	0.0006771	0.0009716	0.0002945
0.15921	0.0005774	0.0009240	0.0003467
0.17058	0.0004856	0.0008764	0.0003908
0.18195	0.0004047	0.0008289	0.0004242
0.19332	0.0003345	0.0007813	0.0004468
0.20470	0.0002779	0.0007337	0.0004558

MEAN DEVIATION = 0.0011285 ROOT MEAN SQUARE DEVIATION = 0.0023497
RESIDUAL SUM OF SQUARES = 0.19876E-03
MEAN PERCENT DEVIATION = 39.9634857

RUN NUMBER = 150-G 5 11 71

RATEC(I)= COEF * (1-X(I)/72) * Y2O2**.4) * (YO2**.63) * (YH2O**.73)
WHERE COEF= .000159 * EXP(5520*(1/(T+460)))
XS= 0.38000 T= 150.00000
YSO2= 0.00050 YO2= 0.02000
YH2O= 0.10000

X(I),GMS H2SO4/GM C	RATE, GMS H2SO4/GM C-MIN	CALCULATED RATE, GMS H2SO4/GM C-MIN	DIFF(I)
0.00427	0.0162019	0.0010133	0.0151886
0.00533	0.0132240	0.0010104	0.0122135
0.00640	0.0112303	0.0010075	0.0102227
0.00747	0.0095647	0.0010047	0.0085600
0.00853	0.0081514	0.0010018	0.0071496
0.00960	0.0069400	0.0009989	0.0059411
0.01067	0.0059054	0.0009960	0.0049093
0.01333	0.0039369	0.0009889	0.0029481
0.01600	0.0026751	0.0009817	0.0016934
0.01867	0.0018675	0.0009745	0.0008930
0.02133	0.0014637	0.0009673	0.0004965
0.02400	0.0012113	0.0009601	0.0002513
0.02666	0.0011180	0.0009529	0.0001651
0.02933	0.0010423	0.0009457	0.0000966
0.03200	0.0010120	0.0009385	0.0000735
0.03466	0.0009994	0.0009313	0.0000680
0.03733	0.0009842	0.0009241	0.0000601
0.04000	0.0009792	0.0009169	0.0000623
0.04266	0.0009691	0.0009097	0.0000593
0.04533	0.0009590	0.0009026	0.0000564
0.04800	0.0009489	0.0008954	0.0000535
0.05066	0.0009413	0.0008882	0.0000532
0.05333	0.0009312	0.0008810	0.0000503
0.05866	0.0009110	0.0008666	0.0000444
0.06400	0.0008984	0.0008522	0.0000462
0.06933	0.0008732	0.0008378	0.0000353
0.07466	0.0008505	0.0008235	0.0000270
0.07999	0.0008303	0.0008091	0.0000212
0.08533	0.0008101	0.0007947	0.0000154
0.09066	0.0007849	0.0007803	0.0000046
0.09599	0.0007621	0.0007659	0.0000038
0.10133	0.0007420	0.0007515	0.0000096
0.10666	0.0007167	0.0007372	0.0000205
0.11733	0.0006663	0.0007084	0.0000421
0.12799	0.0006157	0.0006796	0.0000639
0.13866	0.0005552	0.0006509	0.0000956
0.14932	0.0004946	0.0006221	0.0001275
0.15999	0.0004189	0.0005933	0.0001744
0.17066	0.0003407	0.0005646	0.0002239
0.18132	0.0002624	0.0005358	0.0002734

MEAN DEVIATION = 0.0003888 ROOT MEAN SQUARE DEVIATION = 0.0010436
RESIDUAL SUM OF SQUARES = 0.37030E-04
MEAN PERCENT DEVIATION = 20.6231384

RUN NUMBER = 151 -G 5 12 71

RATEC(I)= COEF * (1-X(I)/72) * Y2O2**.4) * (YO2**.63) * (YH2O**.73)
WHERE COEF= .000159 * EXP(5520*(1/(T+460)))
XS= 0.38000 T= 300.00000
YSO2= 0.00250 YO2= 0.02000
YH2O= 0.10000

X(I),GMS H2SO4/GM C	RATE, GMS H2SO4/GM C-MIN	CALCULATED RATE, GMS H2SO4/GM C-MIN	DIFF(I)
0.00164	0.0028832	0.0003256	0.0025576
0.00327	0.0020756	0.0003242	0.0017514
0.00491	0.0014617	0.0003228	0.0011389
0.00655	0.0010903	0.0003214	0.0007689
0.00819	0.0009207	0.0003200	0.0006007
0.00982	0.0008076	0.0003186	0.0004891
0.01146	0.0007268	0.0003172	0.0004097
0.01310	0.0006663	0.0003157	0.0003505
0.01473	0.0006219	0.0003143	0.0003076
0.01637	0.0005896	0.0003129	0.0002766
0.02046	0.0005330	0.0003094	0.0002236
0.02456	0.0005047	0.0003059	0.0001989
0.02865	0.0004845	0.0003024	0.0001822
0.03274	0.0004765	0.0002988	0.0001777
0.03684	0.0004684	0.0002953	0.0001731
0.04093	0.0004644	0.0002918	0.0001726
0.04502	0.0004604	0.0002883	0.0001721
0.04912	0.0004563	0.0002847	0.0001715
0.05321	0.0004483	0.0002812	0.0001670
0.05730	0.0004442	0.0002777	0.0001665
0.06139	0.0004361	0.0002742	0.0001620
0.06549	0.0004280	0.0002707	0.0001574
0.06958	0.0004199	0.0002671	0.0001528
0.07367	0.0004119	0.0002636	0.0001483
0.07777	0.0004078	0.0002601	0.0001477
0.08186	0.0003957	0.0002566	0.0001391
0.09005	0.0003796	0.0002495	0.0001301
0.09823	0.0003635	0.0002425	0.0001210
0.10642	0.0003472	0.0002354	0.0001118
0.11460	0.0003311	0.0002284	0.0001027
0.12279	0.0003109	0.0002213	0.0000896
0.13098	0.0002908	0.0002143	0.0000765
0.13916	0.0002665	0.0002073	0.0000593
0.14735	0.0002463	0.0002002	0.0000461

MEAN DEVIATION = 0.0001712 ROOT MEAN SQUARE DEVIATION = 0.0001892
RESIDUAL SUM OF SQUARES = 0.10021E-05
MEAN PERCENT DEVIATION = 36.7831726

RUN NUMBER = 152-G 5 14 71

RATEC(I)= COEF * (1-X(I)/72) * Y2O2**.4) * (YO2**.63) * (YH2O**.73)
WHERE COEF= .000159 * EXP(5520*(1/(T+460)))
XS= 0.38000 T= 300.00000
YSO2= 0.00150 YO2= 0.02000
YH2O= 0.10000

X(I),GMS H2SO4/GM C	RATE, GMS H2SO4/GM C-MIN	CALCULATED RATE, GMS H2SO4/GM C-MIN	DIFF(I)
0.00165	0.0007334	0.0002654	0.0004680
0.00331	0.0006086	0.0002643	0.0003444
0.00496	0.0005618	0.0002631	0.0002987
0.00661	0.0005072	0.0002619	0.0002453
0.00827	0.0004760	0.0002608	0.0002152
0.00992	0.0004526	0.0002596	0.0001929
0.01157	0.0004292	0.0002585	0.0001707
0.01323	0.0004962	0.0002573	0.0002389
0.01488	0.0004018	0.0002561	0.0001457
0.01653	0.0003902	0.0002550	0.0001352
0.02066	0.0003667	0.0002521	0.0001146
0.02480	0.0003472	0.0002492	0.0000980
0.02893	0.0003277	0.0002463	0.0000815
0.03306	0.0003121	0.0002434	0.0000687
0.03720	0.0003004	0.0002405	0.0000599
0.04133	0.0002887	0.0002376	0.0000511
0.04546	0.0002731	0.0002347	0.0000384
0.04960	0.0002614	0.0002318	0.0000296
0.05373	0.0002536	0.0002289	0.0000247
0.05786	0.0002457	0.0002260	0.0000198
0.06199	0.0002380	0.0002231	0.0000149
0.06613	0.0002302	0.0002202	0.0000100
0.07026	0.0002224	0.0002173	0.0000051
0.07439	0.0002185	0.0002144	0.0000041
0.07853	0.0002107	0.0002115	0.0000008
0.08266	0.0002028	0.0002086	0.0000057
0.09093	0.0001951	0.0002028	0.0000077
0.09919	0.0001872	0.0001970	0.0000098
0.10746	0.0001795	0.0001912	0.0000117
0.11572	0.0001717	0.0001854	0.0000137
0.12399	0.0001599	0.0001796	0.0000197
0.13226	0.0001522	0.0001738	0.0000216

MEAN DEVIATION = 0.0000539 ROOT MEAN SQUARE DEVIATION = 0.0000811
RESIDUAL SUM OF SQUARES = 0.17109E-06
MEAN PERCENT DEVIATION = 15.9290390

RUN NUMBER = 153-G 5 18 71

RATEC(I)= COEF * (1-X(I)/72) * Y2O2**.4) * (YO2**.63) * (YH2O**.73)
WHERE COEF= .000159 * EXP(5520*(1/(T+460)))
XS= 0.38000 T= 150.00000
YSO2= 0.00250 YO2= 0.02000
YH2O= 0.10000

X(I),GMS H2SO4/GM C	RATE, GMS H2SO4/GM C-MIN	CALCULATED RATE, GMS H2SO4/GM C-MIN	DIFF(I)
0.00612	0.0178058	0.0019194	0.0158863
0.00735	0.0159658	0.0019131	0.0140527
0.00857	0.0141259	0.0019069	0.0122191
0.00980	0.0125234	0.0019006	0.0106228
0.01102	0.0109802	0.0018943	0.0090859
0.01225	0.0096151	0.0018880	0.0077271
0.01531	0.0067068	0.0018723	0.0048345
0.01837	0.0043921	0.0018566	0.0025355
0.02143	0.0034128	0.0018408	0.0015719
0.02450	0.0027599	0.0018251	0.0009348
0.02756	0.0024572	0.0018094	0.0006478
0.03062	0.0022514	0.0017937	0.0004577
0.03368	0.0020654	0.0017780	0.0002875
0.03674	0.0020120	0.0017622	0.0002498
0.03981	0.0019646	0.0017465	0.0002181
0.04287	0.0019230	0.0017308	0.0001922
0.04593	0.0018844	0.0017151	0.0001693
0.04899	0.0018518	0.0016994	0.0001524
0.05205	0.0018191	0.0016836	0.0001355
0.05512	0.0017924	0.0016679	0.0001245
0.05818	0.0017628	0.0016522	0.0001106
0.06124	0.0017390	0.0016365	0.0001026
0.06736	0.0016975	0.0016050	0.0000925
0.07349	0.0016559	0.0015736	0.0000823
0.07961	0.0016144	0.0015422	0.0000723
0.08574	0.0015728	0.0015107	0.0000621
0.09186	0.0015254	0.0014793	0.0000461
0.09798	0.0014838	0.0014478	0.0000360
0.10411	0.0014363	0.0014164	0.0000199
0.11023	0.0013829	0.0013850	0.0000020
0.11636	0.0013355	0.0013535	0.0000181
0.12248	0.0012879	0.0013221	0.0000341
0.13473	0.0011811	0.0012592	0.0000781
0.14698	0.0010802	0.0011963	0.0001161
0.15922	0.0009734	0.0011334	0.0001600
0.17147	0.0008665	0.0010706	0.0002040
0.18372	0.0007538	0.0010077	0.0002539
0.19597	0.0006410	0.0009448	0.0003038
0.20822	0.0005401	0.0008819	0.0003418
0.22046	0.0004570	0.0008190	0.0003620
0.23271	0.0003799	0.0007562	0.0003763
0.24496	0.0003264	0.0006933	0.0003669
0.25721	0.0002849	0.0006304	0.0003455
0.26946	0.0002493	0.0005675	0.0003182
0.28170	0.0002255	0.0005046	0.0002791
0.29395	0.0002077	0.0004418	0.0002340
0.30620	0.0001899	0.0003789	0.0001890
0.31845	0.0001662	0 0003160	0.0001498
0.33070	0.0001543	0.0002531	0.0000988
0.34294	0.0001424	0.0001902	0.0000478

MEAN DEVIATION = 0.0007441 ROOT MEAN SQUARE DEVIATION = 0.0019649
RESIDUAL SUM OF SQUARES = 0.17760E-03
MEAN PERCENT DEVIATION = 39.2494659

RUN NUMBER = 157 -G 5 31 71

RATEC(I)= COEF * (1-X(I)/72) * Y2O2**.4) * (YO2**.63) * (YH2O**.73)
WHERE COEF= .000159 * EXP(5520*(1/(T+460)))
XS= 0.38000 T= 200.00000
YSO2= 0.00200 YO2= 0.02000
YH2O= 0.15000

X(I),GMS H2SO4/GM C	RATE, GMS H2SO4/GM C-MIN	CALCULATED RATE, GMS H2SO4/GM C-MIN	DIFF(I)
0.00272	0.0052234	0.0012000	0.0040234
0.00407	0.0039256	0.0011956	0.0027300
0.00543	0.0025306	0.0011913	0.0013393
0.00679	0.0014275	0.0011870	0.0002405
0.00815	0.0012912	0.0011827	0.0001086
0.00951	0.0012328	0.0011784	0.0000545
0.01087	0.0011939	0.0011740	0.0000199
0.01222	0.0011615	0.0011697	0.0000083
0.01358	0.0011420	0.0011654	0.0000234
0.01698	0.0011096	0.0011546	0.0000450
0.02037	0.0011031	0.0011438	0.0000407
0.02377	0.0010966	0.0011330	0.0000364
0.02716	0.0010901	0.0011222	0.0000321
0.03056	0.0010771	0.0011114	0.0000343
0.03395	0.0010706	0.0011006	0.0000300
0.03735	0.0010576	0.0010898	0.0000322
0.04075	0.0010447	0.0010790	0.0000344
0.04414	0.0010382	0.0010682	0.0000300
0.04754	0.0010317	0.0010574	0.0000257
0.05093	0.0010187	0.0010466	0.0000279
0.05433	0.0010122	0.0010358	0.0000236
0.05772	0.0009992	0.0010250	0.0000258
0.06112	0.0009863	0.0010142	0.0000280
0.06451	0.0009798	0.0010034	0.0000236
0.06791	0.0009668	0.0009926	0.0000258
0.07470	0.0009408	0.0009710	0.0000302
0.08149	0.0009149	0.0009494	0.0000345
0.08828	0.0008889	0.0009278	0.0000389
0.09507	0.0008630	0.0009062	0.0000432
0.10186	0.0008371	0.0008846	0.0000476
0.10866	0.0008110	0.0008630	0.0000520
0.11545	0.0007851	0.0008414	0.0000563
0.12224	0.0007592	0.0008198	0.0000607
0.12903	0.0007397	0.0007982	0.0000586
0.13582	0.0007203	0.0007766	0.0000564
0.14940	0.0006878	0.0007334	0.0000456
0.16298	0.0006489	0.0006902	0.0000414
0.17657	0.0006034	0.0006470	0.0000436
0.19015	0.0005516	0.0006038	0.0000523
0.20373	0.0004996	0.0005606	0.0000610
0.21731	0.0004477	0.0005174	0.0000697

MEAN DEVIATION = 0.0000383 ROOT MEAN SQUARE DEVIATION = 0.0000406
RESIDUAL SUM OF SQUARES = 0.57829E-07
MEAN PERCENT DEVIATION = 4.8161478

RUN NUMBER = 158-G 6 1 71

RATEC(I)= COEF * (1-X(I)/72) * Y2O2**.4) * (YO2**.63) * (YH2O**.73)
WHERE COEF= .000159 * EXP(5520*(1/(T+460)))
XS= 0.38000 T= 300.00000
YSO2= 0.00050 YO2= 0.02000
YH2O= 0.10000

X(I),GMS H2SO4/GM C	RATE, GMS H2SO4/GM C-MIN	CALCULATED RATE, GMS H2SO4/GM C-MIN	DIFF(I)
0.00155	0.0005398	0.0001711	0.0003688
0.00310	0.0004289	0.0001704	0.0002585
0.00466	0.0003675	0.0001697	0.0001979
0.00621	0.0003394	0.0001690	0.0001705
0.00776	0.0003180	0.0001683	0.0001497
0.00931	0.0002995	0.0001676	0.0001320
0.01087	0.0002840	0.0001669	0.0001171
0.01242	0.0002700	0.0001662	0.0001038
0.01397	0.0002581	0.0001655	0.0000926
0.01552	0.0002463	0.0001648	0.0000815
0.01940	0.0002233	0.0001630	0.0000603
0.02329	0.0002048	0.0001613	0.0000436
0.02717	0.0001893	0.0001595	0.0000298
0.03105	-0.0001775	0.0001577	0.0003353
0.03493	-0.0001664	0.0001560	0.0003224
0.03881	0.0001568	0.0001542	0.0000026
0.04269	0.0001486	0.0001525	0.0000038
0.04657	0.0001413	0.0001507	0.0000095
0.05045	0.0001346	0.0001490	0.0000144
0.05433	0.0001294	0.0001472	0.0000178
0.05821	0.0001243	0.0001455	0.0000212
0.06210	0.0001198	0.0001437	0.0000239
0.06598	0.0001161	0.0001420	0.0000258
0.06986	0.0001124	0.0001402	0.0000278
0.07374	0.0001087	0.0001384	0.0000297
0.07762	0.0001050	0.0001367	0.0000317
0.08538	0.0000991	0.0001332	0.0000341
0.09314	0.0000924	0.0001297	0.0000372
0.10091	0.0000872	0.0001262	0.0000389
0.10867	0.0000821	0.0001227	0.0000405
0.11643	0.0000769	0.0001192	0.0000422
0.12419	0.0000725	0.0001156	0.0000431
0.13195	0.0000681	0.0001121	0.0000441
0.13972	0.0000636	0.0001086	0.0000451
0.14748	0.0000591	0.0001051	0.0000460

MEAN DEVIATION = 0.0000609 ROOT MEAN SQUARE DEVIATION = 0.0000988
RESIDUAL SUM OF SQUARES = 0.28291E-06
MEAN PERCENT DEVIATION = 17.3567352

RUN NUMBER = 160 -G 6 9 71

RATEC(I)= COEF * (1-X(I)/72) * Y2O2**.4) * (YO2**.63) * (YH2O**.73)
WHERE COEF= .000159 * EXP(5520*(1/(T+460)))
XS= 0.38000 T= 200.00000
YSO2= 0.00200 YO2= 0.02000
YH2O= 0.05000

X(I),GMS H2SO4/GM C	RATE, GMS H2SO4/GM C-MIN	CALCULATED RATE, GMS H2SO4/GM C-MIN	DIFF(I)
0.00322	0.0030573	0.0005374	0.0025199
0.00483	0.0021512	0.0005351	0.0016161
0.00643	0.0015207	0.0005328	0.0009879
0.00804	0.0011031	0.0005305	0.0005726
0.00965	0.0009377	0.0005282	0.0004095
0.01126	0.0008274	0.0005259	0.0003014
0.01287	0.0007328	0.0005236	0.0002092
0.01448	0.0006697	0.0005213	0.0001484
0.01608	0.0006146	0.0005190	0.0000956
0.02010	0.0005358	0.0005133	0.0000225
0.02413	0.0005043	0.0005076	0.0000033
0.02815	0.0004886	0.0005018	0.0000133
0.03217	0.0004728	0.0004961	0.0000233
0.03619	0.0004570	0.0004904	0.0000333
0.04021	0.0004491	0.0004846	0.0000355
0.04423	0.0004334	0.0004789	0.0000455
0.04825	0.0004255	0.0004732	0.0000477
0.05227	0.0004176	0.0004674	0.0000498
0.05629	0.0004097	0.0004617	0.0000520
0.06031	0.0004019	0.0004560	0.0000541
0.06434	0.0003861	0.0004502	0.0000641
0.06836	0.0003782	0.0004445	0.0000663
0.07238	0.0003743	0.0004388	0.0000645
0.07640	0.0003703	0.0004330	0.0000627
0.08042	0.0003625	0.0004273	0.0000648
0.08846	0.0003546	0.0004158	0.0000612
0.09650	0.0003467	0.0004043	0.0000577
0.10455	0.0003388	0.0003929	0.0000541
0.11259	0.0003349	0.0003814	0.0000465
0.12063	0.0003309	0.0003699	0.0000390
0.12867	0.0003309	0.0003585	0.0000275

MEAN DEVIATION = 0.0000670 ROOT MEAN SQUARE DEVIATION = 0.0000914
RESIDUAL SUM OF SQUARES = 0.21707E-06
MEAN PERCENT DEVIATION = 13.8535900

RUN NUMBER = 161 -C 6 10 71

RATEC(I)= COEF * (1-X(I)/72) * Y2O2**.4) * (YO2**.63) * (YH2O**.73)
WHERE COEF= .000159 * EXP(5520*(1/(T+460)))
XS= 0.38000 T= 200.00000
YSO2= 0.00200 YO2= 0.02000
YH2O= 0.10000

X(I),GMS H2SO4/GM C	RATE, GMS H2SO4/GM C-MIN	CALCULATED RATE, GMS H2SO4/GM C-MIN	DIFF(I)
0.00292	0.0059734	0.0008920	0.0050814
0.00438	0.0042877	0.0008886	0.0033991
0.00584	0.0030784	0.0008851	0.0021932
0.00730	0.0019790	0.0008817	0.0010973
0.00876	0.0012460	0.0008782	0.0003677
0.01022	0.0010481	0.0008748	0.0001734
0.01168	0.0009455	0.0008713	0.0000742
0.01315	0.0008722	0.0008679	0.0000043
0.01461	0.0008429	0.0008644	0.0000215
0.01826	0.0008063	0.0008558	0.0000495
0.02191	0.0007843	0.0008471	0.0000629
0.02556	0.0007623	0.0008385	0.0000762
0.02921	0.0007549	0.0008299	0.0000749
0.03286	0.0007402	0.0008212	0.0000810
0.03651	0.0007256	0.0008126	0.0000869
0.04017	0.0007182	0.0008039	0.0000857
0.04382	0.0007036	0.0007953	0.0000917
0.04747	0.0006963	0.0007867	0.0000904
0.05112	0.0006963	0.0007780	0.0000818
0.05477	0.0006890	0.0007694	0.0000804
0.05842	0.0006890	0.0007607	0.0000718
0.06208	0.0006817	0.0007521	0.0000704
0.06573	0.0006817	0.0007435	0.0000618
0.06938	0.0006743	0.0007348	0.0000605
0.07303	0.0006670	0.0007262	0.0000592
0.08033	0.0006597	0.0007089	0.0000492
0.08764	0.0006523	0.0006916	0.0000393
0.09494	0.0006376	0.0006744	0.0000367
0.10224	0.0006230	0.0006571	0.0000341
0.10954	0.0006156	0.0006398	0.0000242
0.11685	0.0006010	0.0006225	0.0000215
0.12415	0.0005864	0.0006053	0.0000189
0.13145	0.0005717	0.0005880	0.0000163
0.13876	0.0005570	0.0005707	0.0000137
0.14606	0.0005350	0.0005534	0.0000184
0.16067	0.0004911	0.0005189	0.0000278
0.17527	0.0004471	0.0004843	0.0000372
0.18988	0.0003958	0.0004498	0.0000539

MEAN DEVIATION = 0.0000561 ROOT MEAN SQUARE DEVIATION = 0.0000651
RESIDUAL SUM OF SQUARES = 0.13990E-06
MEAN PERCENT DEVIATION = 8.0389071

RUN NUMBER = 162-G 6 11 71

RATEC(I)= COEF * (1-X(I)/72) * Y2O2**.4) * (YO2**.63) * (YH2O**.73)
WHERE COEF= .000159 * EXP(5520*(1/(T+460)))
XS= 0.38000 T= 200.00000
YSO2= 0.00200 YO2= 0.02000
YH2O= 0.10000

X(I),GMS H2SO4/GM C	RATE, GMS H2SO4/GM C-MIN	CALCULATED RATE, GMS H2SO4/GM C-MIN	DIFF(I)
0.00149	0.0069869	0.0008954	0.0060915
0.00298	0.0058647	0.0008919	0.0049728
0.00448	0.0046338	0.0008884	0.0037455
0.00597	0.0030410	0.0008848	0.0021561
0.00746	0.0017667	0.0008813	0.0008854
0.00895	0.0015929	0.0008778	0.0007151
0.01044	0.0015639	0.0008743	0.0006897
0.01193	0.0015784	0.0008707	0.0007077
0.01343	0.0016146	0.0008672	0.0007474
0.01492	0.0016436	0.0008637	0.0007799
0.01865	0.0017304	0.0008548	0.0008756
0.02238	0.0018028	0.0008460	0.0009568
0.02611	0.0018680	0.0008372	0.0010308
0.02984	0.0019187	0.0008284	0.0010903
0.03357	0.0019694	0.0008196	0.0011498
0.03729	0.0020200	0.0008107	0.0012093
0.04475	0.0020925	0.0007931	0.0012994
0.05221	0.0021576	0.0007754	0.0013822
0.05967	0.0022011	0.0007578	0.0014433
0.06713	0.0022300	0.0007401	0.0014899
0.07459	0.0022517	0.0007225	0.0015292
0.08205	0.0022517	0.0007049	0.0015469
0.08951	0.0022372	0.0006872	0.0015500
0.09697	0.0022155	0.0006696	0.0015460
0.10443	0.0021938	0.0006519	0.0015419
0.11188	0.0021504	0.0006343	0.0015161
0.11934	0.0021142	0.0006166	0.0014976
0.12680	0.0020708	0.0005990	0.0014718
0.13426	0.0020273	0.0005813	0.0014459
0.14172	0.0019766	0.0005637	0.0014129
0.14918	0.0019187	0.0005460	0.0013726
0.16410	0.0017956	0.0005108	0.0012849
0.17902	0.0016653	0.0004755	0.0011898
0.19393	0.0015204	0.0004402	0.0010803
0.20885	0.0013757	0.0004049	0.0009708
0.22377	0.0012309	0.0003696	0.0008613
0.23869	0.0010716	0.0003343	0.0007373
0.25361	0.0009051	0.0002990	0.0006061
0.26852	0.0007675	0.0002637	0.0005037
0.28344	0.0006444	0.0002284	0.0004160
0.29836	0.0005358	0.0001931	0.0003426
0.31328	0.0004344	0.0001578	0.0002766
0.32820	0.0003692	0.0001226	0.0002467

MEAN DEVIATION = 0.0010756 ROOT MEAN SQUARE DEVIATION = 0.0011491
RESIDUAL SUM OF SQUARES = 0.48853E-04
MEAN PERCENT DEVIATION = 63.8604431

RUN NUMBER - 163-G 6 14 71

RATEC(I)= COEF * (1-X(I)/72) * Y2O2**.4) * (YO2**.63) * (YH2O**.73)
WHERE COEF= .000159 * EXP(5520*(1/(T+460)))
XS= 0.38000 T= 200.00000
YSO2= 0.00200 YO2= 0.02000
YH2O= 0.10000

X(I),GMS H2SO4/GM C	RATE, GMS H2SO4/GM C-MIN.	CALCULATED RATE, GMS H2SO4/GM C-MIN	DIFF(I)
0.00147	0.0030535	0.0008955	0.0021580
0.00293	0.0025138	0.0008920	0.0016218
0.00440	0.0020480	0.0008885	0.0011595
0.00587	0.0016636	0.0008851	0.0007785
0.00733	0.0013678	0.0008816	0.0004862
0.00880	0.0012569	0.0008781	0.0003788
0.01027	0.0011830	0.0008747	0.0003083
0.01173	0.0011239	0.0008712	0.0002527
0.01320	0.0010721	0.0008677	0.0002044
0.01467	0.0010351	0.0008643	0.0001709
0.01833	0.0009611	0.0008556	0.0001055
0.02200	0.0009242	0.0008469	0.0000773
0.02567	0.0009094	0.0008382	0.0000712
0.02933	0.0009020	0.0008296	0.0000725
0.03300	0.0008872	0.0008209	0.0000663
0.03666	0.0008798	0.0008122	0.0000676
0.04033	0.0008761	0.0008035	0.0000726
0.04400	0.0008725	0.0007949	0.0000776
0.04766	0.0008687	0.0007862	0.0000825
0.05133	0.0008651	0.0007775	0.0000875
0.05500	0.0008577	0.0007688	0.0000888
0.05866	0.0008503	0.0007602	0.0000901
0.06233	0.0008422	0.0007515	0.0000914
0.06600	0.0008354	0.0007428	0.0000926
0.06966	0.0008318	0.0007342	0.0000976
0.07333	0.0008207	0.0007255	0.0000952
0.08066	0.0008059	0.0007081	0.0000978
0.08800	0.0007911	0.0006908	0.0001003
0.09533	0.0007689	0.0006734	0.0000955
0.10266	0.0007541	0.0006561	0.0000980
0.10999	0.0007320	0.0006387	0.0000932
0.11733	0.0007172	0.0006214	0.0000958
0.12466	0.0006950	0.0006040	0.0000910
0.13199	0.0006802	0.0005867	0.0000935
0.13933	0.0006581	0.0005694	0.0000887
0.14666	0.0006358	0.0005520	0.0000838
0.16133	0.0005915	0.0005173	0.0000742
0.17599	0.0005471	0.0004826	0.0000645
0.19066	0.0004953	0.0004479	0.0000474
0.20532	0.0004436	0.0004132	0.0000304

MEAN DEVIATION = 0.0001008 ROOT MEAN SQUARE DEVIATION = 0.0001143
RESIDUAL SUM OF SQUARES - 0.44449E-06
MEAN PERCENT DEVIATION - 12.0020390

RUN NUMBER = 164-C 6 15 71

RATEC(I)= COEF * (1-X(I)/72) * Y2O2**.4) * (YO2**.63) * (YH2O**.73)
WHERE COEF= .000159 * EXP(5520*(1/(T+460)))
XS= 0.38000 T= 200.00000
YSO2= 0.00100 YO2= 0.02000
YH2O= 0.10000

X(I),GMS H2SO4/GM C	RATE, GMS H2SO4/GM C-MIN	CALCULATED RATE, GMS H2SO4/GM C-MIN	DIFF(I)
0.00146	0.0018122	0.0006787	0.0011336
0.00292	0.0012529	0.0006760	0.0005768
0.00439	0.0008129	0.0006734	0.0001395
0.00585	0.0007085	0.0006708	0.0000377
0.00731	0.0006570	0.0006682	0.0000112
0.00877	0.0006190	0.0006656	0.0000465
0.01023	0.0006041	0.0006629	0.0000588
0.01170	0.0005892	0.0006603	0.0000711
0.01316	0.0005743	0.0006577	0.0000834
0.01462	0.0005668	0.0006551	0.0000883
0.01827	0.0005444	0.0006485	0.0001041
0.02193	0.0005369	0.0006420	0.0001050
0.02558	0.0005220	0.0006354	0.0001134
0.02924	0.0005146	0.0006289	0.0001143
0.03289	0.0005071	0.0006223	0.0001152
0.03655	0.0005034	0.0006158	0.0001124
0.04020	0.0005034	0.0006092	0.0001058
0.04386	0.0004996	0.0006026	0.0001030
0.04751	0.0004996	0.0005961	0.0000965
0.05117	0.0004996	0.0005895	0.0000899
0.05482	0.0004996	0.0005830	0.0000834
0.05848	0.0004996	0.0005764	0.0000768
0.06213	0.0004996	0.0005699	0.0000702
0.06579	0.0004996	0.0005633	0.0000637
0.06944	0.0004996	0.0005568	0.0000571
0.07310	0.0004996	0.0005502	0.0000506
0.08041	0.0004922	0.0005371	0.0000449
0.08772	0.0004847	0.0005240	0.0000393
0.09503	0.0004847	0.0005109	0.0000262
0.10234	0.0004773	0.0004978	0.0000205
0.10965	0.0004698	0.0004847	0.0000149
0.11696	0.0004661	0.0004716	0.0000055
0.12427	0.0004624	0.0004585	0.0000039
0.13158	0.0004549	0.0004454	0.0000095
0.13889	0.0004474	0.0004323	0.0000152
0.14620	0.0004325	0.0004192	0.0000134
0.16082	0.0004176	0.0003930	0.0000247
0.17544	0.0003953	0.0003667	0.0000285

MEAN DEVIATION = 0.0000628 ROOT MEAN SQUARE DEVIATION = 0.0000730
RESIDUAL SUM OF SQUARES = 0.17069E-06
MEAN PERCENT DEVIATION = 12.2738876

APPENDIX A-4

SO_2 SORPTION RATE STUDIES IN 1 INCH DIAMETER FIXED BED

SO2 SORPTION RATE 3 2 71

SA-3

TEMPERATURE = 200.000030 F
SPACE VELOCITY = 0.603711E 04 /HR
INLET SO2 MOLE FRACTION (DRY) = 0.002800 (WET) = 0.002 [illegible]
INLET H2O MOLE FRACTION = 0.059287
INLET OXYGEN MOLE FRACTION = 0.037523
INLET CO2 MOLE FRACTION = 0.000000
INLET NO MOLE FRACTION = 0.000000
INLET INERT GAS MOLE FRACTION = 0.900563
INLET CARBON WEIGHT = 15.000001 GMS
TOTAL GAS FLOW = 5.329999 SCFH

TIME	MOLE FRACTION SO2	H2SO4 LOADING GMS ACID/GM C	RATE OF H2SO4 SORPTION GMS ACID/GM C-MIN
0.	0.000000E 00	0.000000E 00	0.000000E 00
20.	0.500000E-03	0.253310E-01	0.159356E-02
40.	0.420000E-03	0.677525E-01	0.164878E-02
60.	0.420000E-03	0.100728E 00	0.164878E-02
80.	0.460000E-03	0.133426E 00	0.162107E-02
100.	0.560000E-03	0.165155E 00	0.155179E-02
120.	0.740000E-03	0.194944E 00	0.142709E-02
140.	0.910000E-03	0.222408E 00	0.130932E-02
160.	0.108000E-02	0.247317E 00	0.119155E-02
180.	0.125000E-02	0.269970E 00	0.107378E-02
200.	0.140000E-02	0.290407E 00	0.969872E-03
220.	0.156000E-02	0.308696E 00	0.899039E-03
240.	0.170000E-02	0.324907E 00	0.762042E-03
260.	0.182000E-02	0.339316E 00	0.672910E-03
280.	0.194000E-02	0.352063E 00	0.595779E-03
300.	0.206000E-02	0.363147E 00	0.512647E-03
320.	0.216000E-02	0.372707E 00	0.443370E-03
340.	0.224000E-02	0.381021E 00	0.387949E-03
360.	0.232000E-02	0.388225E 00	0.332527E-03

AVERAGE RATE OF SO2 SORPTION = 0.103376E-02
AVERAGE RATE OF SORPTION UP
TO A LOADING OF 18.4 GMS ACID/GM C = 0.126 E-02 GMS ACID/GM C-MIN

LINEAR GAS VELOCITY = 0.36 ft/sec.

SO2 SORPTION RATE 3 8 71

SA-4

TEMPERATURE = 200.000030 F
SPACE VELOCITY = 0.590733E 04 /HR
INLET SO2 MOLE FRACTION (DRY) = 0.002700 (WET) = 0.002535
INLET H2O MOLE FRACTION = 0.061089
INLET OXYGEN MOLE FRACTION = 0.034710
INLET CO2 MOLE FRACTION = 0.000000
INLET NO MOLE FRACTION = 0.000000
INLET INERT GAS MOLE FRACTION = 0.902464
INLET CARBON WEIGHT = 41.430000 GMS
TOTAL GAS FLOW 14.4[illegible]000 SCFH

TIME	MOLE FRACTION SO2	H2SO4 LOADING GMS ACID/GM C	RATE OF H2SO4 SORPTION GMS ACID/GM C-MIN
0.	0.000000E 00	0.000000E 00	0.000000E 00
20.	0.167500E-02	0.252362E-01	0.696872E-03
40.	0.165000E-02	0.496473E-01	0.744232E-03
60.	0.165000E-02	0.745936E-01	0.753998E-03
80.	0.154000E-02	0.996872E-01	0.757764E-03
100.	0.160000E-02	0.1247072E-01	0.744232E-03
120.	0.152000E-02	0.1497795E-01	0.663043E-03
140.	0.150000E-02	0.1711499E 00	0.608917E-03
160.	0.148000E-02	0.1931361E 00	0.554791E-03
180.	0.145000E-02	0.1337588E 00	0.507431E-03
200.	0.[illegible]E-02	0.1436695E 00	0.473632E-03
220.	0.2[illegible]000E-02	0.1527302E 00	0.439773E-03
240.	0.2[illegible]000E-02	0.1613563E 00	0.426242E-03
260.	0.2[illegible]000E-02	0.1698206E 00	0.419476E-03

AVERAGE RATE OF SO2 SORPTION = 0.599028E-03
AVERAGE RATE OF SORPTION UP
TO A LOADING OF 15.4 GMS ACID/GM C = 0.057 E-02 GMS ACID/GM C-MIN
LINEAR GAS VELOCITY = 1.00 ft/sec

SO2 SORPTION RATE 3 4 71

SA-5

TEMPERATURE = 200.000030 F
SPACE VELOCITY = 0.602357E 04 /HR
INLET SO2 MOLE FRACTION (DRY) = 0.002600 (WET) = 0.002519
INLET H2O MOLE FRACTION = 0.059896
INLET OXYGEN MOLE FRACTION = 0.034032
INLET CO2 MOLE FRACTION = 0.000000
INLET NO MOLE FRACTION = 0.000000
INLET INERT GAS MOLE FRACTION = 0.903893
INLET CARBON WEIGHT = 10.360000 GMS
TOTAL GAS FLOW = 3.672999 SCFH

TIME	MOLE FRACTION SO2	H2SO4 LOADING GMS ACID/GM C	RATE OF H2SO4 SORPTION GMS ACID/GM C-MIN
0.	0.000000E 00	0.000000E 00	0.000000E 00
20.	0.230000E-03	0.354362E-01	0.169237E-02
40.	0.110000E-03	0.701126E-01	0.177526E-02
60.	0.120000E-03	0.105546E 00	0.176576E-02
80.	0.210000E-03	0.140294E 00	0.170619E-02
100.	0.270000E-03	0.174003E 00	0.166474E-02
120.	0.310000E-03	0.207022E 00	0.163711E-02
140.	0.320000E-03	0.239695E 00	0.163003E-02
150.	0.330000E-03	0.255963E 00	0.162[illegible]E-02

AVERAGE RATE OF SO2 SORPTION = 0.169145E-02
AVERAGE RATE OF SORPTION UP
TO A LOADING OF 18.4 GMS ACID/GM C = 0.172E-02 GMS ACID/GM C MIN

LINEAR GAS VELOCITY = 0.25 ft/sec

SO2 SORPTION RATE 3 5 71

SA-6

TEMPERATURE = 200.000030 F
SPACE VELOCITY = 0.601045E 04 /HR
INLET SO2 MOLE FRACTION (DRY) = 0.002640 (WET) = 0.002487
INLET H2O MOLE FRACTION = 0.057708
INLET OXYGEN MOLE FRACTION = 0.034106
INLET CO2 MOLE FRACTION = 0.000000
INLET NO MOLE FRACTION = 0.000000
INLET INERT GAS MOLE FRACTION = 0.905866
INLET CARBON WEIGHT = 20.720001 GMS
TOTAL GAS FLOW = 7.329999 SCFH

TIME	MOLE FRACTION SO2	H2SO4 LOADING GMS ACID/GM C	RATE OF H2SO4 SORPTION GMS ACID/GM C-MIN
0.	0.000000E 00	0.000000E 00	0.000000E 00
15.	0.870000E-03	0.228503E-01	0.1[illegible]E-02
30.	0.620000E-03	0.424862E-01	0.139554E-02
40.	0.600000E-03	0.565127E-01	0.140956E-02
80.	0.600000E-03	0.112887E 00	0.140936E-02
100.	0.660000E-03	0.140660E 00	0.136791E-02
120.	0.760000E-03	0.167327E 00	0.129[illegible]E-02
140.	0.880000E-03	0.192475E 00	0.121[illegible]E-02
160.	0.104000E-02	0.215698E 00	0.110[illegible]E-02
180.	0.120000E-02	0.236690E 00	0.994845E-03

AVERAGE RATE OF SO2 SORPTION = 0.127445E-02
AVERAGE RATE OF SORPTION UP
TO A LOADING OF 18.4 GMS ACID/GM C = 0.133E-02 GMS ACID/GM C MIN

LINEAR GAS VELOCITY = 0.50 ft/sec

SO2 SORPTION RATE 3 9 71

SA-7

TEMPERATURE = 200.000030 F
SPACE VELOCITY = 0.560806E 04 /HR
INLET SO2 MOLE FRACTION (DRY) = 0.002600 (WET) = 0.002433
INLET H2O MOLE FRACTION = 0.063908
INLET OXYGEN MOLE FRACTION = 0.036588
INLET CO2 MOLE FRACTION = 0.000000
INLET NO MOLE FRACTION = 0.000000
INLET INERT GAS MOLE FRACTION = 0.897648
INLET CARBON WEIGHT = 62.300006 GMS
TOTAL GAS FLOW = 20.498001 SCFH

TIME	MOLE FRACTION SO2	H2SO4 LOADING GMS ACID/GM C	RATE OF H2SO4 SORPTION GMS ACID/GM C-MIN
0.	0.000000E 00	0.000000E 00	0.000000E 00
20.	0.136000E-02	0.245902E-01	0.794060E-03
40.	0.140000E-02	0.402153E-01	0.768445E-03
60.	0.141000E-02	0.555201E-01	0.762041E-03
80.	0.140000E-02	0.708250E-01	0.768445E-03
100.	0.132000E-02	0.867062E-01	0.819675E-03
120.	0.130000E-02	0.103227E 00	0.832482E-03
140.	0.128000E-02	0.120005E 00	0.845289E-03
160.	0.128000E-02	0.136511E 00	0.845289E-03
180.	0.129000E-02	0.153753E 00	0.838886E-03
200.	0.130000E-02	0.170466E 00	0.832482E-03

AVERAGE RATE OF SO2 SORPTION = 0.810709E-03

AVERAGE RATE OF SORPTION UP
TO A LOADING OF 18.4 GMS ACID/GM C = 0.081E-02 GMS ACID/GM C - MIN

LINEAR GAS VELOCITY = 1.50 ft/sec

SO2 SORPTION RATE 3 12 71

SA-8

TEMPERATURE = 200.000030 F
SPACE VELOCITY = 0.588949E 04 /HR
INLET SO2 MOLE FRACTION (DRY) = 0.002800 (WET) = 0.002630
INLET H2O MOLE FRACTION = 0.060578
INLET OXYGEN MOLE FRACTION = 0.034815
INLET CO2 MOLE FRACTION = 0.000000
INLET NO MOLE FRACTION = 0.000000
INLET INERT GAS MOLE FRACTION = 0.901716
INLET CARBON WEIGHT = 82.860000 GMS
TOTAL GAS FLOW = 28.722999 SCFH

TIME	MOLE FRACTION SO2	H2SO4 LOADING GMS ACID/GM C	RATE OF H2SO4 SORPTION GMS ACID/GM C-MIN
0.	0.000000E 00	0.000000E 00	0.000000E 00
20.	0.640000E-03	0.334750E-01	0.145778E-02
40.	0.160000E-02	0.561516E-01	0.809879E-03
60.	0.205000E-02	0.693121E-01	0.506174E-03
80.	0.205000E-02	0.794356E-01	0.506174E-03
100.	0.206000E-02	0.894916E-01	0.499425E-03
120.	0.206000E-02	0.994801E-01	0.499425E-03
140.	0.206000E-02	0.109468E 00	0.499425E-03
160.	0.206000E-02	0.119457E 00	0.499425E-03
180.	0.209000E-02	0.129243E 00	0.479178E-03
200.	0.212000E-02	0.138624E 00	0.458931E-03
220.	0.219000E-02	0.147397E 00	0.418437E-03
240.	0.225000E-02	0.155294E 00	0.371194E-03
260.	0.229000E-02	0.162448E 00	0.344198E-03
280.	0.230000E-02	0.169264E 00	0.337449E-03
300.	0.232000E-02	0.175879E 00	0.323951E-03
320.	0.237000E-02	0.182020E 00	0.290204E-03
340.	0.244000E-02	0.187351E 00	0.242963E-03

AVERAGE RATE OF SO2 SORPTION = 0.502601E-03

AVERAGE RATE OF SORPTION UP
TO A LOADING OF 18.4 GMS ACID/GM C = 0.050E-02 GMS ACID/GM C - MIN

LINEAR GAS VELOCITY = 2.00 ft/sec

APPENDIX A-5

SO_2 SORPTION STUDIES IN 6" DIAMETER FLUID BED ADSORBER

	Page
1. Experimental Results of SO_2 Sorption Runs and Material Balances	84
2. Calculation of Rate of Sulfuric Acid Formation from Runs in Continuous Fluidized Bed Unit	88

APPENDIX A-5-1

EXPERIMENTAL RESULTS OF SO_2 SORPTION RUNS AND MATERIAL BALANCES

RUN NUMBER SA-21 CARBON 96324.
DATE 6 8 71

INLET % SULFUR ON CARBON 0.40 %
OUTLET % SULFUR ON CARBON 5.23 %
INLET SO2 LOADING ON CARBON 0.0 LBS SO2/LB C
OUTLET SO2 LOADING ON CARBON= 0.1168 LBS SO2/LB C

SO2 CONCENTRATION IN INLET GAS = 2009. PPM
SO2 CONCENTRATION IN OUTLET GAS= 164. PPM

VOLUME % H2O = 13.0 %
VOLUME % O2 = 4.2 %
CONCENTRATION OF NO= 150.0 PPM

TOTAL GAS FLOW RATE= 1249.0 SCFM
LINEAR GAS VELOCITY = 2.4 FT/SEC

TEMPERATURE = 200.0 DEG F

TOTAL SPACE VELOCITY = 4337. 1/HR

POUNDS SULFUR INTO REACTOR = 0.2359 LBS/HR
POUNDS SULFUR OUT OF REACTOR= 0.2080 LBS/HR

% SULFUR ACCOUNTED FOR = 88.2 %

MATERIAL BALANCE FOR SO2 SORPTION

RUN NUMBER SA-22 CARBON 96324.
DATE 6 16 71

INLET % SULFUR ON CARBON = 0.40 %
OUTLET % SULFUR ON CARBON = 6.40 %
INLET SO2 LOADING ON CARBON = 0.0 LBS SO2/LB C
OUTLET SO2 LOADING ON CARBON= 0.1463 LBS SO2/LB C

SO2 CONCENTRATION IN INLET GAS = 3946. PPM
SO2 CONCENTRATION IN OUTLET GAS= 1151. PPM

VOLUME % H2O = 13.0 %
VOLUME % O2 = 4.2 %
CONCENTRATION OF NO= 150.0 PPM

TOTAL GAS FLOW RATE= 1140.0 SCFM
LINEAR GAS VELOCITY 2.2 FT/SEC

TEMPERATURE = 200.0 DEG F

TOTAL SPACE VELOCITY = 3959. 1/HR

POUNDS SULFUR INTO REACTOR = 0.4147 LBS/HR
POUNDS SULFUR OUT OF REACTOR= 0.3828 LBS/HR

% SULFUR ACCOUNTED FOR = 92.3 %

MATERIAL BALANCE FOR SO2 SORPTION

RUN NUMBER SA-23 CARBON 96324.
DATE 6 16 71

INLET % SULFUR ON CARBON = 0.40 %
OUTLET % SULFUR ON CARBON = 4.91 %
INLET SO2 LOADING ON CARBON = 0.0 LBS SO2/LB C
OUTLET SO2 LOADING ON CARBON= 0.1068 LBS SO2/LB C

SO2 CONCENTRATION IN INLET GAS = 2009. PPM
SO2 CONCENTRATION IN OUTLET GAS= 0. PPM

VOLUME % H2O = 13.0 %
VOLUME % O2 = 4.2 %
CONCENTRATION OF NO= 150.0 PPM

TOTAL GAS FLOW RATE= 1106.0 SCFH
LINEAR GAS VELOCITY = 2.1 FT/SEC

TEMPERATURE = 200.0 DEG F

TOTAL SPACE VELOCITY = 3841. 1/HR

POUNDS SULFUR INTO REACTOR = 0.2120 LBS/HR
POUNDS SULFUR OUT OF REACTOR= 0.2032 LBS/HR

% SULFUR ACCOUNTED FOR = 95.9 %

MATERIAL BALANCE FOR SO2 SORPTION

RUN NUMBER SA-24 CARBON 96324.
DATE 6 16 71

INLET % SULFUR ON CARBON = 0.40 %
OUTLET % SULFUR ON CARBON = 5.44 %
INLET SO2 LOADING ON CARBON = 0.0 LBS SO2/LB C
OUTLET SO2 LOADING ON CARBON= 0.1230 LBS SO2/LB C

SO2 CONCENTRATION IN INLET GAS = 3982. PPM
SO2 CONCENTRATION IN OUTLET GAS= 1078. PPM

VOLUME % H2O = 13.0 %
VOLUME % O2 = 4.6 %
CONCENTRATION OF NO= 150.0 PPM

TOTAL GAS FLOW RATE= 964.0 SCFH
LINEAR GAS VELOCITY = 2.0 FT/SEC

TEMPERATURE = 250.0 DEG F

TOTAL SPACE VELOCITY = 3347. 1/HR

POUNDS SULFUR INTO REACTOR = 0.3557 LBS/HR
POUNDS SULFUR OUT OF REACTOR= 0.3146 LBS/HR

% SULFUR ACCOUNTED FOR = 88.4 %

MATERIAL BALANCE FOR SO2 SORPTION

RUN NUMBER SA-25 CARBON 96324.
DATE 6 17 71

INLET % SULFUR ON CARBON = 0.40 %
OUTLET % SULFUR ON CARBON = 4.02 %
INLET SO2 LOADING ON CARBON = 0.0 LBS SO2/LB C
OUTLET SO2 LOADING ON CARBON= 0.0837 LBS SO2/LB C

SO2 CONCENTRATION IN INLET GAS = 2028. PPM
SO2 CONCENTRATION IN OUTLET GAS= 411. PPM

VOLUME % H2O = 13.0 %
VOLUME % O2 = 4.1 %
CONCENTRATION OF NO= 150.0 PPM

TOTAL GAS FLOW RATE= 1095.0 SCFH
LINEAR GAS VELOCITY = 2.2 FT/SEC

TEMPERATURE = 250.0 DEG F

TOTAL SPACE VELOCITY = 3802. 1/HR

POUNDS SULFUR INTO REACTOR = 0.2116 LBS/HR
POUNDS SULFUR OUT OF REACTOR= 0.1965 LBS/HR

% SULFUR ACCOUNTED FOR = 92.9 %

MATERIAL BALANCE FOR SO2 SORPTION

RUN NUMBER SA-26 CARBON 96324.
DATE 6 18 71

INLET % SULFUR ON CARBON = 0.40 %
OUTLET % SULFUR ON CARBON = 5.37 %
INLET SO2 LOADING ON CARBON = 0.0 LBS SO2/LB C
OUTLET SO2 LOADING ON CARBON= 0.1210 LBS SO2/LB C

SO2 CONCENTRATION IN INLET GAS = 2055. PPM
SO2 CONCENTRATION IN OUTLET GAS= 46. PPM

VOLUME % H2O = 13.0 %
VOLUME % O2 = 4.3 %
CONCENTRATION OF NO= 150.0 PPM

TOTAL GAS FLOW RATE= 1188.0 SCFH
LINEAR GAS VELOCITY = 2.3 FT/SEC

TEMPERATURE = 200.0 DEG F

TOTAL SPACE VELOCITY = 4125. 1/HR

POUNDS SULFUR INTO REACTOR = 0.2371 LBS/HR
POUNDS SULFUR OUT OF REACTOR= 0.2379 LBS/HR

% SULFUR ACCOUNTED FOR = 102.5 %

APPENDIX A-5-2

CALCULATION OF RATE OF SULFURIC ACID FORMATION FROM RUNS IN CONTINUOUS FLUIDIZED BED UNIT

CALCULATION OF RATE OF SO2 SORPTION FROM
FLUIDIZED BED REACTOR

RUN NUMBER SA-21 CARBON 96324.
DATE 6 8 71

INLET % SULFUR ON CARBON = 0.40 %
OUTLET % SULFUR ON CARBON = 5.23 %
INLET SO2 LOADING ON CARBON = 0.0 LBS SO2/LB C
OUTLET SO2 LOADING ON CARBON= 0.1168 LBS SO2/LB C

SO2 CONCENTRATION IN INLET GAS = 2009. PPM
SO2 CONCENTRATION IN OUTLET GAS= 164. PPM

VOLUME % H2O = 13.0 %
VOLUME % O2 = 4.2 %
CONCENTRATION OF NO= 150.0 PPM

TOTAL GAS FLOW RATE= 1249.0 SCFH
LINEAR GAS VELOCITY = 2.4 FT/SEC

TEMPERATURE = 200.0 DEG F

TOTAL SPACE VELOCITY = 4337. 1/HR

STAGE	AVG ACID LOADING LBS H2SO4/LB C	AVERAGE SO2 CONCENTRATION PPM	AVERAGE RATE OF ACID FORMATION LBS H2SO4/LB C-MIN
1	0.0213	251.	0.00076
2	0.0426	425.	0.00076
3	0.0662	607.	0.00084
4	0.0920	808.	0.00092
5	0.1178	1018.	0.00092
6	0.1480	1247.	0.00108
7	0.1817	1507.	0.00120
8	0.2266	1827.	0.00160

OVERALL RATE OF ACID FORMATION = 0.10113E-02

CALCULATION OF RATE OF SO2 SORPTION FROM
FLUIDIZED BED REACTOR

RUN NUMBER SA-22 CARBON 96324.
DATE 6 16 71

INLET % SULFUR ON CARBON = 0.40 %
OUTLET % SULFUR ON CARBON = 6.40 %
INLET SO2 LOADING ON CARBON = 0.0 LBS SO2/LB C
OUTLET SO2 LOADING ON CARBON= 0.1468 LBS SO2/LB C

SO2 CONCENTRATION IN INLET GAS = 3946. PPM
SO2 CONCENTRATION IN OUTLET GAS= 1151. PPM

VOLUME % H2O = 13.0 %
VOLUME % O2 = 4.2 %
CONCENTRATION OF NO= 150.0 PPM

TOTAL GAS FLOW RATE= 1140.0 SCFH
LINEAR GAS VELOCITY = 2.2 FT/SEC

TEMPERATURE = 200.0 DEG F

TOTAL SPACE VELOCITY = 3959. 1/HR

STAGE	AVG ACID LOADING LBS H2SO4/LB C	AVERAGE SO2 CONCENTRATION PPM	AVERAGE RATE OF ACID FORMATION LBS H2SO4/LB C-MIN
1	0.0308	1306.	0.00124
2	0.0607	1612.	0.00121
3	0.0888	1904.	0.00113
4	0.1214	2210.	0.00132
5	0.1531	2535.	0.00128
6	0.1875	2868.	0.00139
7	0.2274	3242.	0.00161
8	0.2772	3695.	0.00201

OVERALL RATE OF ACID FORMATION = 0.13983E-02

CALCULATION OF RATE OF SO2 SORPTION FROM
FLUIDIZED BED REACTOR

RUN NUMBER SA-23 CARBON 96324.
DATE 6 16 71

INLET % SULFUR ON CARBON = 0.40 %
OUTLET % SULFUR ON CARBON = 4.91 %
INLET SO2 LOADING ON CARBON = 0.0 LBS SO2/LB C
OUTLET SO2 LOADING ON CARBON= 0.1088 LBS SO2/LB C

SO2 CONCENTRATION IN INLET GAS = 2009. PPM
SO2 CONCENTRATION IN OUTLET GAS= 0. PPM

VOLUME % H2O = 13.0 %
VOLUME % O2 = 4.2 %
CONCENTRATION OF NO= 150.0 PPM

TOTAL GAS FLOW RATE= 1106.0 SCFH
LINEAR GAS VELOCITY = 2.1 FT/SEC

TEMPERATURE = 200.0 DEG F

TOTAL SPACE VELOCITY = 3841. 1/HR

STAGE	AVG ACID LOADING LBS H2SO4/LB C	AVERAGE SO2 CONCENTRATION PPM	AVERAGE RATE OF ACID FORMATION LBS H2SO4/LB C-MIN
1	0.0087	46.	0.00035
2	0.0260	183.	0.00071
3	0.0477	388.	0.00089
4	0.0703	621.	0.00092
5	0.0954	872.	0.00103
6	0.1241	1155.	0.00117
7	0.1562	1475.	0.00131
8	0.1909	1827.	0.00142

OVERALL RATE OF ACID FORMATION = 0.97531E-03

CALCULATION OF RATE OF SO2 SORPTION FROM
FLUIDIZED BED REACTOR

RUN NUMBER SA-24 CARBON 96324.
DATE 6 16 71

INLET % SULFUR ON CARBON = 0.40 %
OUTLET % SULFUR ON CARBON = 5.44 %
INLET SO2 LOADING ON CARBON = 0.0 LBS SO2/LB C
OUTLET SO2 LOADING ON CARBON= 0.1230 LBS SO2/LB C

SO2 CONCENTRATION IN INLET GAS = 3982. PPM
SO2 CONCENTRATION IN OUTLET GAS= 1078. PPM

VOLUME % H2O = 13.0 %
VOLUME % O2 = 4.6 %
CONCENTRATION OF NO= 150.0 PPM

TOTAL GAS FLOW RATE= 964.0 SCFH
LINEAR GAS VELOCITY = 2.0 FT/SEC

TEMPERATURE = 250.0 DEG F

TOTAL SPACE VELOCITY = 3347. 1/HR

STAGE	AVG ACID LOADING LBS H2SO4/LB C	AVERAGE SO2 CONCENTRATION PPM	AVERAGE RATE OF ACID FORMATION LBS H2SO4/LB C-MIN
1	0.0241	1219.	0.00096
2	0.0482	1502.	0.00096
3	0.0738	1795.	0.00102
4	0.1002	2101.	0.00105
5	0.1282	2420.	0.00111
6	0.1530	2731.	0.00099
7	0.1981	3142.	0.00179
8	0.2470	3695.	0.00195

OVERALL RATE OF ACID FORMATION = 0.12288E-02

CALCULATION OF RATE OF SO2 SORPTION FROM
FLUIDIZED BED REACTOR

RUN NUMBER SA-25 CARBON 96324.
DATE 6 17 71

INLET % SULFUR ON CARBON = 0.40 %
OUTLET % SULFUR ON CARBON = 4.02 %
INLET SO2 LOADING ON CARBON = 0.0 LBS SO2/LB C
OUTLET SO2 LOADING ON CARBON= 0.0837 LBS SO2/LB C

SO2 CONCENTRATION IN INLET GAS = 2028. PPM
SO2 CONCENTRATION IN OUTLET GAS= 411. PPM

VOLUME % H2O = 13.0 %
VOLUME % O2 = 4.1 %
CONCENTRATION OF NO= 150.0 PPM

TOTAL GAS FLOW RATE= 1095.0 SCFH
LINEAR GAS VELOCITY = 2.2 FT/SEC

TEMPERATURE = 250.0 DEG F

TOTAL SPACE VELOCITY = 3802. 1/HR

STAGE	AVG ACID LOADING LBS H2SO4/LB C	AVERAGE SO2 CONCENTRATION PPM	AVERAGE RATE OF ACID FORMATION LBS H2SO4/LB C-MIN
1	0.0140	484.	0.00056
2	0.0307	644.	0.00067
3	0.0464	813.	0.00063
4	0.0657	996.	0.00077
5	0.0832	1187.	0.00070
6	0.1043	1388.	0.00084
7	0.1279	1621.	0.00095
8	0.1551	1866.	0.00109

OVERALL RATE OF ACID FORMATION = 0.77687E-03

CALCULATION OF RATE OF SO2 SORPTION FROM
FLUIDIZED BED REACTOR

RUN NUMBER SA-26 CARBON 96324.
DATE 6 18 71

INLET % SULFUR ON CARBON = 0.40 %
OUTLET % SULFUR ON CARBON = 5.37 %
INLET SO2 LOADING ON CARBON = 0.0 LBS SO2/LB C
OUTLET SO2 LOADING ON CARBON= 0.1210 LBS SO2/LB C

SO2 CONCENTRATION IN INLET GAS = 2055. PPM
SO2 CONCENTRATION IN OUTLET GAS= 46. PPM

VOLUME % H2O = 13.0 %
VOLUME % O2 - 4.3 %
CONCENTRATION OF NO= 150.0 PPM

TOTAL GAS FLOW RATE= 1188.0 SCFH
LINEAR GAS VELOCITY = 2.3 FT/SEC

TEMPERATURE = 200.0 DEG F

TOTAL SPACE VELOCITY = 4125. 1/HR

STAGE	AVG ACID LOADING LBS H2SO4/LB C	AVERAGE SO2 CONCENTRATION PPM	AVERAGE RATE OF ACID FORMATION LBS H2SO4/LB C-MIN
1	0.0170	132.	0.00072
2	0.0377	324.	0.00088
3	0.0583	534.	0.00088
4	0.0817	758.	0.00099
5	0.1068	1005.	0.00107
6	0.1346	1274.	0.00118
7	0.1660	1576.	0.00133
8	0.1974	1895.	0.00133

OVERALL RATE OF ACID FORMATION = 0.10476E-02

APPENDIX A-6

MULTIPLE REGRESSION ANALYSES

```
DIFFERENTIAL BED DATA - EFFECT OF VOLUME FRACTION OXYGEN ON RATE
RUNS 138,139,144
VAR1 = LN O2
LN(RATE/(1-LOADING/.38))
AVERAGES
VAR( 1)=-0.400088E 01, VAR( 2)=-0.708355E 01

STANDARD DEVIATIONS
VAR( 1)= 0.647692E 00, VAR( 2)= 0.409425E 00

SIMPLE CORRELATION COEFFICIENTS
VARS( 1, 1)= 0.10000E 01, VARS( 1, 2)= 0.98395E 00

STEP NUMBER  1          ENTER VARIABLE  1
STANDARD ERROR OF ESTIMATE=  0.7345897E-01
R SQUARED =  0.9681584E 00
GOODNESS OF FIT,F(   1,   91)=  0.2766902E 04
CONSTANT TERM = -0.4595063E 01          ANTILOG CONSTANT TERM =  0.1010158E-01
VAR      COEFF          STD DEV      T VALUE      BETA COEFF
                         COEFF
  1    0.62198E 00 0.118245E-01     52.6013    0.98395E 00
```

```
DIFFERENTIAL BED DATA - EFFECT OF VOLUME FRACTION WATER ON RATE
RUNS 157,139,160
VAR1 = LN H2O
VAR2 = LN(RATE/(1- LOADING/.38))
AVERAGES
VAR( 1)=-0.234333E 01, VAR( 2)=-0.708523E 01

STANDARD DEVIATIONS
VAR( 1)= 0.441023E 00, VAR( 2)= 0.337632E 00

SIMPLE CORRELATION COEFFICIENTS
VARS( 1, 1)= 0.10000E 01, VARS( 1, 2)= 0.95259E 00

STEP NUMBER  1          ENTER VARIABLE  1
STANDARD ERROR OF ESTIMATE=  0.1032892E 00
R SQUARED =  0.9074175E 00
GOODNESS OF FIT,F(   1,   92)=  0.9017090E 03
CONSTANT TERM = -0.5376325E 01          ANTILOG CONSTANT TERM =  0.4624788E-02
VAR      COEFF          STD DEV      T VALUE      BETA COEFF
                         COEFF
  1    0.72927E 00 0.242858E-01     30.0285    0.95259E 00
```

DIFFERENTIAL BED DATA - REGRESSION TO FIND ORDER OF SO_2
AND LOADING WITH ORDERS FOR H_2O AND O_2
FIXED FROM RUNS I AND II

```
RUNS 139,140,141,142,143,148,149,150,151,152,153,158
VAR1 = LN SO2
VAR2 = 1/TEMP
VAR3 = LN(RATE/(1-LOAD/.38)(H2O**M)(O2**P))
AVERAGES
VAR( 1)=-0.659038E 01, VAR( 2)= 0.152275E-02, VAR( 3)=-0.294482E 01

STANDARD DEVIATIONS
VAR( 1)= 0.627714E 00, VAR( 2)= 0.119787E-03, VAR( 3)= 0.856011E 00

SIMPLE CORRELATION COEFFICIENTS
VARS( 1, 1)= 0.10000E 01, VARS( 1, 2)= 0.14132E 00, VARS( 1, 3)= 0.46112E 00
VARS( 2, 2)= 0.10000E 01, VARS( 2, 3)= 0.80794E 00

STEP NUMBER  1            ENTER VARIABLE  2
STANDARD ERROR OF ESTIMATE=  0.5050560E 00
R SQUARED =  0.6527721E 00
GOODNESS OF FIT,F(    1, 392)=  0.7369407E 03
CONSTANT TERM = -0.1173662E 02          ANTILOG CONSTANT TERM =  0.7995579E-05
VAR       COEFF          STD DEV     T VALUE      BETA COEFF
                         COEFF
  2   0.57736E 04 0.212683E 03     27.1467    0.80794E 00

STEP NUMBER  2            ENTER VARIABLE  1
STANDARD ERROR OF ESTIMATE=  0.4065425E 00
R SQUARED =  0.7755923E 00
GOODNESS OF FIT,F(    2, 391)=  0.6756807E 03
CONSTANT TERM = -0.8010632E 01          ANTILOG CONSTANT TERM =  0.3319150E-03
VAR       COEFF          STD DEV     T VALUE      BETA COEFF
                         COEFF
  1   0.48276E 00 0.330011E-01     14.6287    0.35401E 00
  2   0.54161E 04 0.172934E 03     31.3190    0.75791E 00
```

```
DIFFERENTIAL BED STUDIES - REGRESSION TO FIND ORDER OF SO2                III
                           AND LOADING WITH ORDERS FOR H2O AND O2
                           FIXED FROM RUNS I AND II
RUNS 139,140,141,142,143,148,149,150,251,152,153,158
VAR1 = LN SO2
VAR2 = 1/TEMP
VAR3 = LN(1- LOADING/.38)
VAR4 = LN(RATE/H2O**M * O2**P)
AVERAGES
VAR( 1)=-0.659038E 01, VAR( 2)= 0.152275E-02, VAR( 3)=-0.253406E 00, VAR( 4)=-0.319822E 01

STANDARD DEVIATIONS
VAR( 1)= 0.627714E 00, VAR( 2)= 0.119787E-03, VAR( 3)= 0.272110E 00, VAR( 4)= 0.912883E 00

SIMPLE CORRELATION COEFFICIENTS
VARS( 1, 1)= 0.10000E 01, VARS( 1, 2)= 0.14132E 00, VARS( 1, 3)=-0.15079E 00, VARS( 1, 4)= 0.38742E 00
VARS( 2, 2)= 0.10000E 01, VARS( 2, 3)=-0.18505E 00, VARS( 2, 4)= 0.70257E 00
VARS( 3, 3)= 0.10000E 01, VARS( 3, 4)= 0.35147E 00

STEP NUMBER  1          ENTER VARIABLE  2
STANDARD ERROR OF ESTIMATE=  0.6504441E 00
R SQUARED =  0.4936111E 00
GOODNESS OF FIT,F(   1, 392)=  0.3821084E 03
CONSTANT TERM = -0.1135137E 02          ANTILOG CONSTANT TERM =  0.1175337E-04
VAR      COEFF          STD DEV     T VALUE     BETA COEFF
                         COEFF
  2   0.53542E 04 0.273907E 03     19.5476    0.70257E 00

STEP NUMBER  2          ENTER VARIABLE  3
STANDARD ERROR OF ESTIMATE=  0.4723298E 00
R SQUARED =  0.7336542E 00
GOODNESS OF FIT,F(   2, 391)=  0.5385083E 03
CONSTANT TERM = -0.1199815E 02          ANTILOG CONSTANT TERM =  0.6155597E-05
VAR      COEFF          STD DEV     T VALUE     BETA COEFF
                         COEFF
  2   0.60573E 04 0.202397E 03     29.9278    0.79483E 00
  3   0.16726E 01 0.890985E-01     18.7720    0.49855E 00

STEP NUMBER  3          ENTER VARIABLE  1
STANDARD ERROR OF ESTIMATE=  0.3417416E 00
R SQUARED =  0.8609285E 00
GOODNESS OF FIT,F(   3, 390)=  0.8047700E 03
CONSTANT TERM = -0.7980425E 01          ANTILOG CONSTANT TERM =  0.3420941E-03
VAR      COEFF          STD DEV     T VALUE     BETA COEFF
                         COEFF
  1   0.52844E 00 0.279714E-01     18.8922    0.36337E 00
  2   0.57321E 04 0.147447E 03     38.8755    0.75216E 00
  3   0.18299E 01 0.650004E-01     28.1518    0.54545E 00
```

APPENDIX A-7

COMPARISON OF MULTIPLE REGRESSIONS TO DIFFERENTIAL RATE DATA

MODEL A

```
RATEC(I)=COEFF * (1-X(I)/XS)**A * (YSO2**B) * (YO2**C) * (YH2O**D)
   WHERE COEFF= K * EXP(-E/R*(1/(T+460)))

        T=     200.        XS=     0.38      YSO2= 0.00200       YO2=    0.007       YH2O=    0.100
     -E/R=    5520.         A=    1.000         B=    0.400        C=    0.630          D=    0.730
        K=0.000159
```

MODEL B

```
RATEC(I)=COEFF * (1-X(I)/XS)**A * (YSO2**B) * (YO2**C) * (YH2O**D)
   WHERE COEFF= K * EXP(-E/R*(1/(T+460)))

        T=     200.        XS=     0.38      YSO2= 0.00200       YO2=    0.007       YH2O=    0.100
     -E/R=    5416.         A=    1.000         B=    0.480        C=    0.620          D=    0.730
        K=0.000332
```

MODEL C

```
RATEC(I)=COEFF * (1-X(I)/XS)**A * (YSO2**B) * (YO2**C) * (YH2O**D)
   WHERE COEFF= K * EXP(-E/R*(1/(T+460)))

        T=     200.        XS=     0.38      YSO2= 0.00200       YO2=    0.007       YH2O=    0.100
     -E/R=    5732.         A=    1.830         B=    0.530        C=    0.620          D=    0.730
        K=0.000342
```

RUN NUMBER = 138-G 4 21 71

X(I), GMS H2SO4/GM C	RATE, GMS H2SO4/GM C-MIN	[MODEL A] CALCULATED RATE, GMS H2SO4/GM C-MIN	[MODEL B] CALCULATED RATE, GMS H2SO4/GM C-MIN	[MODEL C] CALCULATED RATE, GMS H2SO4/GM C-MIN
0.00145	0.0024220	0.0004622	0.0005268	0.0006401
0.00290	0.0017513	0.0004604	0.0005248	0.0006357
0.00435	0.0012296	0.0004587	0.0005228	0.0006312
0.00580	0.0008421	0.0004569	0.0005207	0.0006267
0.00725	0.0006185	0.0004551	0.0005187	0.0006223
0.00870	0.0005291	0.0004534	0.0005167	0.0006179
0.01015	0.0005068	0.0004516	0.0005147	0.0006135
0.01160	0.0004918	0.0004498	0.0005127	0.0006091
0.01305	0.0004844	0.0004480	0.0005107	0.0006047
0.01450	0.0004770	0.0004463	0.0005086	0.0006003
0.01813	0.0004620	0.0004418	0.0005036	0.0005895
0.02175	0.0004546	0.0004374	0.0004985	0.0005787
0.02538	0.0004397	0.0004330	0.0004935	0.0005680
0.02900	0.0004248	0.0004286	0.0004885	0.0005575
0.03263	0.0004173	0.0004241	0.0004834	0.0005470
0.03625	0.0004099	0.0004197	0.0004784	0.0005366
0.03988	0.0003987	0.0004153	0.0004733	0.0005263
0.04351	0.0003913	0.0004109	0.0004683	0.0005160
0.04713	0.0003875	0.0004064	0.0004632	0.0005059
0.05076	0.0003801	0.0004020	0.0004562	0.0004959
0.05438	0.0003763	0.0003976	0.0004531	0.0004859
0.05801	0.0003726	0.0003932	0.0004481	0.0004761
0.06163	0.0003689	0.0003887	0.0004430	0.0004663
0.06526	0.0003689	0.0003843	0.0004380	0.0004566
0.06888	0.0003652	0.0003799	0.0004330	0.0004471
0.07251	0.0003652	0.0003754	0.0004279	0.0004376
0.07976	0.0003615	0.0003666	0.0004178	0.0004189
0.08701	0.0003577	0.0003577	0.0004077	0.0004005
0.09426	0.0003540	0.0003489	0.0003976	0.0003826
0.10151	0.0003540	0.0003400	0.0003876	0.0003650
0.10876	0.0003540	0.0003312	0.0003775	0.0003478
0.11602	0.0003502	0.0003223	0.0003674	0.0003310

[MODEL A]
MEAN DEVIATION = 0.0000186 ROOT MEAN SQUARE DEVIATION = 0.0000222
RESIDUAL SUM OF SQUARES = 0.12850E-07
MEAN PERCENT DEVIATION = 4.4846649

[MODEL B]
MEAN DEVIATION = 0.0000531 ROOT MEAN SQUARE DEVIATION = 0.0000572
RESIDUAL SUM OF SQUARES = 0.85176E-07
MEAN PERCENT DEVIATION = 13.5773926

[MODEL C]
MEAN DEVIATION = 0.0000939 ROOT MEAN SQUARE DEVIATION = 0.0001021
RESIDUAL SUM OF SQUARES = 0.27103E-06
MEAN PERCENT DEVIATION = 22.8247833

RUN NUMBER = 139-G 4 22 71

X(I), GMS H2SO4/GM C	RATE, GMS H2SO4/GM C-MIN	[MODEL A] CALCULATED RATE, GMS H2SO4/GM C-MIN	[MODEL B] CALCULATED RATE, GMS H2SO4/GM C-MIN	[MODEL C] CALCULATED RATE, GMS H2SO4/GM C-MIN
0.00294	0.0070602	0.0008920	0.0010060	0.0012185
0.00441	0.0051136	0.0008885	0.0010021	0.0012098
0.00589	0.0037625	0.0008850	0.0009982	0.0012011
0.00736	0.0021282	0.0008815	0.0009942	0.0011925
0.00883	0.0012857	0.0008781	0.0009903	0.0011839
0.01030	0.0010750	0.0008746	0.0009864	0.0011753
0.01177	0.0009443	0.0008711	0.0009825	0.0011668
0.01324	0.0008716	0.0008676	0.0009785	0.0011582
0.01472	0.0008208	0.0008641	0.0009746	0.0011497
0.01839	0.0007699	0.0008554	0.0009648	0.0011286
0.02207	0.0007627	0.0008467	0.0009550	0.0011077
0.02575	0.0007482	0.0008380	0.0009452	0.0010870
0.02943	0.0007409	0.0008293	0.0009354	0.0010664
0.03311	0.0007336	0.0008206	0.0009255	0.0010460
0.03679	0.0007264	0.0008119	0.0009157	0.0010258
0.04047	0.0007191	0.0008032	0.0009059	0.0010058
0.04415	0.0007118	0.0007945	0.0008961	0.0009859
0.04783	0.0007046	0.0007858	0.0008863	0.0009662
0.05151	0.0007009	0.0007771	0.0008765	0.0009467
0.05518	0.0006936	0.0007684	0.0008666	0.0009274
0.05886	0.0006900	0.0007597	0.0008568	0.0009083
0.06254	0.0006864	0.0007510	0.0008470	0.0008893
0.06622	0.0006827	0.0007423	0.0008372	0.0008706
0.06990	0.0006791	0.0007336	0.0008274	0.0008520
0.07358	0.0006755	0.0007249	0.0008176	0.0008336
0.08094	0.0006683	0.0007075	0.0007979	0.0007973
0.08830	0.0006610	0.0006901	0.0007783	0.0007618
0.09565	0.0006538	0.0006727	0.0007587	0.0007270
0.10301	0.0006465	0.0006553	0.0007390	0.0006929
0.11037	0.0006356	0.0006379	0.0007194	0.0006596
0.11773	0.0006247	0.0006205	0.0006998	0.0006271
0.12509	0.0006138	0.0006030	0.0006801	0.0005952
0.13244	0.0006028	0.0005856	0.0006605	0.0005642
0.13980	0.0005883	0.0005682	0.0006409	0.0005339
0.14716	0.0005775	0.0005508	0.0006212	0.0005043
0.16188	0.0005464	0.0005160	0.0005820	0.0004475
0.17659	0.0005230	0.0004812	0.0005427	0.0003938
0.19131	0.0004903	0.0004464	0.0005035	0.0003433

[MODEL A]
MEAN DEVIATION = 0.0000556 ROOT MEAN SQUARE DEVIATION = 0.0000678
RESIDUAL SUM OF SQUARES = 0.15155E-06
MEAN PERCENT DEVIATION = 7.6649427

[MODEL B]
MEAN DEVIATION = 0.0001246 ROOT MEAN SQUARE DEVIATION = 0.0001379
RESIDUAL SUM OF SQUARES = 0.62780E-06
MEAN PERCENT DEVIATION = 17.6211090

[MODEL C]
MEAN DEVIATION = 0.0001848 ROOT MEAN SQUARE DEVIATION = 0.0002145
RESIDUAL SUM OF SQUARES = 0.15190E-05
MEAN PERCENT DEVIATION = 25.8819580

RUN NUMBER = 140-G 4 23 71

X(I),GMS H2SO4/GM C	RATE, GMS H2SO4/GM C-MIN	[MODEL A] CALCULATED RATE, GMS H2SO4/GM C-MIN	[MODEL B] CALCULATED RATE, GMS H2SO4/GM C-MIN	[MODEL C] CALCULATED RATE, GMS H2SO4/GM C-MIN
0.00292	0.0045633	0.0009753	0.0011198	0.0013716
0.00437	0.0032855	0.0009716	0.0011155	0.0013619
0.00583	0.0015552	0.0009678	0.0011112	0.0013523
0.00729	0.0012923	0.0009640	0.0011069	0.0013426
0.00875	0.0011317	0.0009603	0.0011025	0.0013330
0.01021	0.0010258	0.0009565	0.0010982	0.0013235
0.01167	0.0009638	0.0009527	0.0010939	0.0013139
0.01312	0.0009163	0.0009489	0.0010895	0.0013044
0.01458	0.0008907	0.0009452	0.0010852	0.0012950
0.01823	0.0008433	0.0009357	0.0010744	0.0012714
0.02187	0.0008250	0.0009263	0.0010635	0.0012481
0.02552	0.0008141	0.0009169	0.0010527	0.0012249
0.02916	0.0008031	0.0009075	0.0010419	0.0012020
0.03281	0.0007922	0.0008980	0.0010311	0.0011792
0.03645	0.0007849	0.0008886	0.0010202	0.0011566
0.04010	0.0007776	0.0008792	0.0010094	0.0011343
0.04375	0.0007703	0.0008697	0.0009986	0.0011121
0.04739	0.0007630	0.0008603	0.0009878	0.0010902
0.05104	0.0007557	0.0008509	0.0009769	0.0010684
0.05468	0.0007520	0.0008414	0.0009661	0.0010468
0.05833	0.0007447	0.0008320	0.0009553	0.0010255
0.06197	0.0007374	0.0008226	0.0009445	0.0010043
0.06562	0.0007338	0.0008132	0.0009336	0.0009833
0.06926	0.0007265	0.0008037	0.0009228	0.0009626
0.07291	0.0007228	0.0007943	0.0009120	0.0009420
0.08020	0.0007119	0.0007754	0.0008903	0.0009015
0.08749	0.0006972	0.0007566	0.0008687	0.0008618
0.09478	0.0006899	0.0007377	0.0008470	0.0008229
0.10207	0.0006827	0.0007189	0.0008254	0.0007848
0.10936	0.0006717	0.0007000	0.0008037	0.0007475
0.11666	0.0006608	0.0006811	0.0007821	0.0007111
0.12395	0.0006461	0.0006623	0.0007604	0.0006755
0.13124	0.0006352	0.0006434	0.0007388	0.0006407
0.13853	0.0006206	0.0006246	0.0007171	0.0006067
0.14582	0.0006097	0.0006057	0.0006955	0.0005736
0.16040	0.0005804	0.0005680	0.0006522	0.0005100
0.17498	0.0005513	0.0005303	0.0006088	0.0004497

[MODEL A]
MEAN DEVIATION = 0.0000620 ROOT MEAN SQUARE DEVIATION = 0.0000715
RESIDUAL SUM OF SQUARES = 0.16349E-06
MEAN PERCENT DEVIATION = 8.0887070

[MODEL B]
MEAN DEVIATION = 0.0001733 ROOT MEAN SQUARE DEVIATION = 0.0001826
RESIDUAL SUM OF SQUARES = 0.10666E-05
MEAN PERCENT DEVIATION = 23.0612030

[MODEL C]
MEAN DEVIATION = 0.0002412 ROOT MEAN SQUARE DEVIATION = 0.0002779
RESIDUAL SUM OF SQUARES = 0.24722E-05
MEAN PERCENT DEVIATION = 30.7294922

RUN NUMBER = 141-G 4 26 71

X(I), GMS H2SO4/GM C	RATE, GMS H2SO4/GM C-MIN	[MODEL A] CALCULATED RATE, GMS H2SO4/GM C-MIN	[MODEL B] CALCULATED RATE, GMS H2SO4/GM C-MIN	[MODEL C] CALCULATED RATE, GMS H2SO4/GM C-MIN
0.00148	0.0051181	0.0007981	0.0008797	0.0010536
0.00296	0.0042197	0.0007950	0.0008762	0.0010461
0.00444	0.0023197	0.0007919	0.0008728	0.0010386
0.00592	0.0011415	0.0007888	0.0008694	0.0010311
0.00740	0.0009353	0.0007856	0.0008659	0.0010236
0.00888	0.0008359	0.0007825	0.0008625	0.0010162
0.01036	0.0007843	0.0007794	0.0008590	0.0010088
0.01184	0.0007511	0.0007763	0.0008556	0.0010014
0.01332	0.0007364	0.0007732	0.0008522	0.0009941
0.01480	0.0007253	0.0007700	0.0008487	0.0009867
0.01850	0.0007217	0.0007622	0.0008401	0.0009685
0.02220	0.0007106	0.0007544	0.0008315	0.0009504
0.02590	0.0007032	0.0007466	0.0008229	0.0009325
0.02960	0.0006959	0.0007388	0.0008143	0.0009148
0.03330	0.0006849	0.0007310	0.0008057	0.0008972
0.03700	0.0006775	0.0007232	0.0007971	0.0008797
0.04071	0.0006702	0.0007154	0.0007885	0.0008624
0.04441	0.0006628	0.0007076	0.0007799	0.0008453
0.04811	0.0006554	0.0006998	0.0007713	0.0008283
0.05181	0.0006480	0.0006920	0.0007627	0.0008115
0.05551	0.0006443	0.0006842	0.0007541	0.0007948
0.05921	0.0006407	0.0006764	0.0007455	0.0007783
0.06291	0.0006333	0.0006686	0.0007369	0.0007620
0.06661	0.0006260	0.0006608	0.0007283	0.0007458
0.07031	0.0006223	0.0006530	0.0007197	0.0007297
0.07401	0.0006149	0.0006452	0.0007111	0.0007139
0.08141	0.0006038	0.0006296	0.0006939	0.0006826
0.08881	0.0005928	0.0006140	0.0006767	0.0006519
0.09621	0.0005818	0.0005984	0.0006595	0.0006219
0.10361	0.0005671	0.0005828	0.0006423	0.0005926
0.11101	0.0005523	0.0005672	0.0006251	0.0005639
0.11842	0.0005339	0.0005516	0.0006079	0.0005358
0.12582	0.0005192	0.0005360	0.0005907	0.0005084
0.13322	0.0005008	0.0005203	0.0005735	0.0004816
0.14062	0.0004823	0.0005047	0.0005563	0.0004555
0.14802	0.0004640	0.0004891	0.0005391	0.0004301
0.16282	0.0004234	0.0004579	0.0005047	0.0003812
0.17762	0.0003866	0.0004267	0.0004703	0.0003350
0.19243	0.00	0.0003955	0.0004359	0.0002915

[MODEL A]
MEAN DEVIATION = 0.0000328 ROOT MEAN SQUARE DEVIATION = 0.0000349
RESIDUAL SUM OF SQUARES = 0.40235E-07
MEAN PERCENT DEVIATION = 5.5525742

[MODEL B]
MEAN DEVIATION = 0.0000982 ROOT MEAN SQUARE DEVIATION = 0.0001000
RESIDUAL SUM OF SQUARES = 0.32985E-06
MEAN PERCENT DEVIATION = 16.2963409

[MODEL C]
MEAN DEVIATION = 0.0001288 ROOT MEAN SQUARE DEVIATION = 0.0001552
RESIDUAL SUM OF SQUARES = 0.79487E-06
MEAN PERCENT DEVIATION = 19.5493622

RUN NUMBER = 142-G 4 27 71

X(I), GMS H2SO4/GM C	RATE, GMS H2SO4/GM C-MIN	[MODEL A] CALCULATED RATE, GMS H2SO4/GM C-MIN	[MODEL B] CALCULATED RATE, GMS H2SO4/GM C-MIN	[MODEL C] CALCULATED RATE, GMS H2SO4/GM C-MIN
0.00144	0.0050370	0.0006787	0.0007242	0.0008500
0.00288	0.0036817	0.0006761	0.0007214	0.0008441
0.00431	0.0021380	0.0006735	0.0007187	0.0008383
0.00575	0.0009639	0.0006710	0.0007159	0.0008324
0.00719	0.0008334	0.0006684	0.0007132	0.0008265
0.00863	0.0007573	0.0006658	0.0007104	0.0008207
0.01006	0.0007067	0.0006632	0.0007077	0.0008149
0.01150	0.0006740	0.0006607	0.0007049	0.0008091
0.01294	0.0006559	0.0006581	0.0007022	0.0008034
0.01438	0.0006522	0.0006555	0.0006994	0.0007976
0.01797	0.0006414	0.0006491	0.0006926	0.0007833
0.02156	0.0006341	0.0006426	0.0006857	0.0007692
0.02516	0.0006233	0.0006362	0.0006788	0.0007551
0.02875	0.0006160	0.0006297	0.0006719	0.0007412
0.03235	0.0006068	0.0006233	0.0006651	0.0007273
0.03594	0.0005916	0.0006168	0.0006582	0.0007136
0.03953	0.0005943	0.0006104	0.0006513	0.0007001
0.04313	0.0005870	0.0006040	0.0006444	0.0006866
0.04672	0.0005798	0.0005975	0.0006376	0.0006733
0.05032	0.0005762	0.0005911	0.0006307	0.0006600
0.05391	0.0005689	0.0005846	0.0006238	0.0006469
0.05750	0.0005617	0.0005782	0.0006169	0.0006339
0.06110	0.0005581	0.0005717	0.0006101	0.0006211
0.06469	0.0005508	0.0005653	0.0006032	0.0006083
0.06829	0.0005436	0.0005589	0.0005963	0.0005957
0.07188	0.0005400	0.0005524	0.0005894	0.0005832
0.07907	0.0005290	0.0005395	0.0005757	0.0005585
0.08626	0.0005182	0.0005266	0.0005619	0.0005343
0.09344	0.0005073	0.0005138	0.0005482	0.0005107
0.10063	0.0004965	0.0005009	0.0005344	0.0004875
0.10782	0.0004855	0.0004880	0.0005207	0.0004648
0.11501	0.0004747	0.0004751	0.0005069	0.0004425
0.12220	0.0004638	0.0004622	0.0004932	0.0004208
0.12938	0.0004493	0.0004493	0.0004794	0.0003996
0.13657	0.0004349	0.0004364	0.0004657	0.0003789
0.14376	0.0004204	0.0004235	0.0004519	0.0003587
0.15814	0.0003914	0.0003978	0.0004244	0.0003197
0.17251	0.0003623	0.0003720	0.0003969	0.0002828

[MODEL A]
MEAN DEVIATION = 0.0000107 ROOT MEAN SQUARE DEVIATION = 0.0000135
RESIDUAL SUM OF SQUARES = 0.57925E-08
MEAN PERCENT DEVIATION = 1.8738451

[MODEL B]
MEAN DEVIATION = 0.0000444 ROOT MEAN SQUARE DEVIATION = 0.0000462
RESIDUAL SUM OF SQUARES = 0.68234E-07
MEAN PERCENT DEVIATION = 8.1341553

[MODEL C]
MEAN DEVIATION = 0.0000788 ROOT MEAN SQUARE DEVIATION = 0.0000895
RESIDUAL SUM OF SQUARES = 0.25634E-06
MEAN PERCENT DEVIATION = 13.9007187

RUN NUMBER = 143-G 4 28 71

X(I),GMS H2SO4/GM C	RATE, GMS H2SO4/GM C-MIN	[MODEL A] CALCULATED RATE, GMS H2SO4/GM C-MIN	[MODEL B] CALCULATED RATE, GMS H2SO4/GM C-MIN	[MODEL C] CALCULATED RATE, GMS H2SO4/GM C-MIN
0.00145	0.0033683	0.0005143	0.0005192	0.0005887
0.00290	0.0021586	0.0005124	0.0005172	0.0005845
0.00435	0.0010503	0.0005104	0.0005152	0.0005804
0.00580	0.0008330	0.0005084	0.0005132	0.0005763
0.00724	0.0006990	0.0005065	0.0005113	0.0005723
0.00869	0.0006157	0.0005045	0.0005093	0.0005682
0.01014	0.0005577	0.0005025	0.0005073	0.0005642
0.01159	0.0005216	0.0005006	0.0005053	0.0005601
0.01304	0.0004962	0.0004986	0.0005033	0.0005561
0.01449	0.0004817	0.0004966	0.0005013	0.0005521
0.01811	0.0004745	0.0004917	0.0004963	0.0005421
0.02173	0.0004636	0.0004868	0.0004914	0.0005322
0.02536	0.0004564	0.0004819	0.0004864	0.0005224
0.02898	0.0004527	0.0004769	0.0004814	0.0005127
0.03260	0.0004455	0.0004720	0.0004765	0.0005030
0.03622	0.0004382	0.0004671	0.0004715	0.0004935
0.03985	0.0004346	0.0004622	0.0004665	0.0004840
0.04347	0.0004310	0.0004573	0.0004616	0.0004746
0.04709	0.0004238	0.0004523	0.0004566	0.0004653
0.05071	0.0004201	0.0004474	0.0004516	0.0004561
0.05434	0.0004165	0.0004425	0.0004467	0.0004470
0.05796	0.0004129	0.0004376	0.0004417	0.0004379
0.06158	0.0004093	0.0004326	0.0004367	0.0004289
0.06520	0.0004056	0.0004277	0.0004318	0.0004200
0.06883	0.0004020	0.0004228	0.0004268	0.0004112
0.07245	0.0003984	0.0004179	0.0004218	0.0004025
0.07969	0.0003948	0.0004080	0.0004119	0.0003853
0.08694	0.0003875	0.0003982	0.0004019	0.0003685
0.09418	0.0003803	0.0003883	0.0003920	0.0003520
0.10143	0.0003730	0.0003785	0.0003821	0.0003358
0.10867	0.0003658	0.0003687	0.0003721	0.0003200
0.11592	0.0003586	0.0003588	0.0003622	0.0003046
0.12316	0.0003477	0.0003490	0.0003523	0.0002894
0.13041	0.0003404	0.0003391	0.0003423	0.0002747
0.13765	0.0003332	0.0003293	0.0003324	0.0002603
0.14490	0.0003223	0.0003194	0.0003225	0.0002462
0.15939	0.0003006	0.0002997	0.0003026	0.0002191

[MODEL A]
MEAN DEVIATION = 0.0000173 ROOT MEAN SQUARE DEVIATION = 0.0000212
RESIDUAL SUM OF SQUARES = 0.13874E-07
MEAN PERCENT DEVIATION = 3.9458380

[MODEL B]
MEAN DEVIATION = 0.0000202 ROOT MEAN SQUARE DEVIATION = 0.0000237
RESIDUAL SUM OF SQUARES = 0.17448E-07
MEAN PERCENT DEVIATION = 4.6428308

[MODEL C]
MEAN DEVIATION = 0.0000443 ROOT MEAN SQUARE DEVIATION = 0.0000496
RESIDUAL SUM OF SQUARES = 0.76388E-07
MEAN PERCENT DEVIATION = 11.0762110

RUN NUMBER = 144-G 4 29 71

X(I),GMS H2SO4/GM C	RATE, GMS H2SO4/GM C-MIN	[MODEL A] CALCULATED RATE, GMS H2SO4/GM C-MIN	[MODEL B] CALCULATED RATE, GMS H2SO4/GM C-MIN	[MODEL C] CALCULATED RATE, GMS H2SO4/GM C-MIN
0.00293	0.0053489	0.0012691	0.0014233	0.0017239
0.00440	0.0037517	0.0012641	0.0014178	0.0017117
0.00586	0.0025259	0.0012592	0.0014123	0.0016995
0.00733	0.0015452	0.0012543	0.0014067	0.0016873
0.00880	0.0014264	0.0012493	0.0014012	0.0016752
0.01026	0.0013558	0.0012444	0.0013957	0.0016631
0.01173	0.0013001	0.0012395	0.0013901	0.0016510
0.01320	0.0012518	0.0012345	0.0013846	0.0016390
0.01466	0.0012035	0.0012296	0.0013791	0.0016271
0.01833	0.0011367	0.0012173	0.0013652	0.0015973
0.02199	0.0010995	0.0012049	0.0013514	0.0015678
0.02566	0.0010810	0.0011926	0.0013375	0.0015386
0.02932	0.0010698	0.0011803	0.0013237	0.0015096
0.03299	0.0010623	0.0011679	0.0013099	0.0014808
0.03665	0.0010549	0.0011556	0.0012960	0.0014523
0.04032	0.0010474	0.0011432	0.0012822	0.0014241
0.04399	0.0010400	0.0011309	0.0012684	0.0013961
0.04765	0.0010326	0.0011186	0.0012545	0.0013683
0.05132	0.0010252	0.0011062	0.0012407	0.0013408
0.05498	0.0010215	0.0010939	0.0012269	0.0013136
0.05865	0.0010178	0.0010816	0.0012130	0.0012866
0.06231	0.0010141	0.0010692	0.0011992	0.0012599
0.06598	0.0010066	0.0010569	0.0011853	0.0012334
0.06964	0.0010030	0.0010445	0.0011715	0.0012072
0.07331	0.0009992	0.0010322	0.0011577	0.0011812
0.08064	0.0009918	0.0010075	0.0011300	0.0011301
0.08797	0.0009843	0.0009829	0.0011023	0.0010799
0.09530	0.0009769	0.0009582	0.0010747	0.0010308
0.10263	0.0009658	0.0009335	0.0010470	0.0009828
0.10996	0.0009509	0.0009088	0.0010193	0.0009358
0.11730	0.0009398	0.0008842	0.0009916	0.0008898
0.12463	0.0009212	0.0008595	0.0009640	0.0008449
0.13196	0.0008989	0.0008348	0.0009363	0.0008010
0.13929	0.0008766	0.0008101	0.0009086	0.0007582
0.14662	0.0008544	0.0007855	0.0008809	0.0007165
0.16128	0.0008060	0.0007361	0.0008256	0.0006363
0.17594	0.0007577	0.0006868	0.0007703	0.0005604
0.19061	0.0007058	0.0006374	0.0007149	0.0004889
0.20527	0.0006538	0.0005881	0.0006596	0.0004219

[MODEL A]
MEAN DEVIATION = 0.0000647 ROOT MEAN SQUARE DEVIATION = 0.0000712
RESIDUAL SUM OF SQUARES = 0.17218E-06
MEAN PERCENT DEVIATION = 6.5631943

[MODEL B]
MEAN DEVIATION = 0.0001368 ROOT MEAN SQUARE DEVIATION = 0.0001617
RESIDUAL SUM OF SQUARES = 0.88861E-06
MEAN PERCENT DEVIATION = 13.0999966

[MODEL C]
MEAN DEVIATION = 0.0002509 ROOT MEAN SQUARE DEVIATION = 0.0002865
RESIDUAL SUM OF SQUARES = 0.27905E-05
MEAN PERCENT DEVIATION = 24.5051270

RUN NUMBER = 145-G 4 30 71

X(I),GMS H2SO4/GM C	RATE, GMS H2SO4/GM C-MIN	[MODEL-A] CALCULATED RATE, GMS H2SO4/GM C-MIN	[MODEL B] CALCULATED RATE, GMS H2SO4/GM C-MIN	[MODEL C] CALCULATED RATE, GMS H2SO4/GM C-MIN
0.00290	0.0064766	0.0008921	0.0010061	0.0012187
0.00436	0.0051453	0.0008887	0.0010023	0.0012101
0.00581	0.0037780	0.0008852	0.0009984	0.0012016
0.00726	0.0026626	0.0008818	0.0009945	0.0011930
0.00871	0.0014752	0.0008783	0.0009906	0.0011846
0.01017	0.0010650	0.0008749	0.0009868	0.0011761
0.01162	0.0010218	0.0008715	0.0009829	0.0011677
0.01307	0.0009931	0.0008680	0.0009790	0.0011592
0.01452	0.0009715	0.0008646	0.0009751	0.0011509
0.01815	0.0009319	0.0008560	0.0009654	0.0011300
0.02178	0.0009031	0.0008474	0.0009558	0.0011094
0.02541	0.0008816	0.0008388	0.0009461	0.0010889
0.02904	0.0008635	0.0008302	0.0009364	0.0010686
0.03267	0.0008455	0.0008217	0.0009267	0.0010484
0.03630	0.0008312	0.0008131	0.0009170	0.0010265
0.03994	0.0008203	0.0008045	0.0009073	0.0010087
0.04357	0.0008096	0.0007959	0.0008976	0.0009890
0.04720	0.0007988	0.0007873	0.0008880	0.0009696
0.05083	0.0007916	0.0007787	0.0008783	0.0009503
0.05446	0.0007844	0.0007701	0.0008686	0.0009312
0.05809	0.0007772	0.0007615	0.0008589	0.0009123
0.06172	0.0007700	0.0007530	0.0008492	0.0008936
0.06535	0.0007628	0.0007444	0.0008395	0.0008750
0.06898	0.0007556	0.0007358	0.0008298	0.0008566
0.07261	0.0007520	0.0007272	0.0008201	0.0008384
0.07987	0.0007412	0.0007100	0.0008008	0.0008025
0.08713	0.0007268	0.0006928	0.0007814	0.0007674
0.09439	0.0007124	0.0006757	0.0007620	0.0007329
0.10165	0.0006980	0.0006585	0.0007427	0.0006992
0.10891	0.0006764	0.0006413	0.0007233	0.0006661
0.11618	0.0006621	0.0006241	0.0007039	0.0006339
0.12344	0.0006405	0.0006069	0.0006845	0.0006023
0.13070	0.0006225	0.0005898	0.0006652	0.0005715
0.13796	0.0006009	0.0005726	0.0006458	0.0005414
0.14522	0.0005793	0.0005554	0.0006264	0.0005120
0.15974	0.0005362	0.0005211	0.0005877	0.0004556
0.17426	0.0004893	0.0004867	0.0005489	0.0004021

[MODEL A]
MEAN DEVIATION = 0.0000418 ROOT MEAN SQUARE DEVIATION = 0.0000594
RESIDUAL SUM OF SQUARES = 0.11287E-06
MEAN PERCENT DEVIATION = 4.9554777

[MODEL B]
MEAN DEVIATION = 0.0000602 ROOT MEAN SQUARE DEVIATION = 0.0000640
RESIDUAL SUM OF SQUARES = 0.13116E-06
MEAN PERCENT DEVIATION = 7.9813900

[MODEL C]
MEAN DEVIATION = 0.0001177 ROOT MEAN SQUARE DEVIATION = 0.0001347
RESIDUAL SUM OF SQUARES = 0.58060E-06
MEAN PERCENT DEVIATION = 14.6390228

RUN NUMBER = 148-G 5 7 71

X(I), GMS H2SO4/GM C	RATE, GMS H2SO4/GM C-MIN	[MODEL A] CALCULATED RATE, GMS H2SO4/GM C-MIN	[MODEL B] CALCULATED RATE, GMS H2SO4/GM C-MIN	[MODEL C] CALCULATED RATE, GMS H2SO4/GM C-MIN
0.00229	0.0216960	0.0019391	0.0021979	0.0028036
0.00343	0.0199966	0.0019333	0.0021912	0.0027881
0.00457	0.0184388	0.0019274	0.0021845	0.0027726
0.00572	0.0170509	0.0019215	0.0021779	0.0027572
0.00686	0.0157197	0.0019156	0.0021712	0.0027418
0.00801	0.0144734	0.0019098	0.0021646	0.0027264
0.00915	0.0133122	0.0019039	0.0021579	0.0027111
0.01029	0.0122359	0.0018980	0.0021513	0.0026958
0.01144	0.0112162	0.0018922	0.0021446	0.0026806
0.01429	0.0087520	0.0018775	0.0021280	0.0026427
0.01715	0.0067127	0.0018628	0.0021113	0.0026050
0.02001	0.0051266	0.0018481	0.0020947	0.0025675
0.02237	0.0041636	0.0018335	0.0020791	0.0025303
0.02573	0.0038010	0.0018188	0.0020614	0.0024934
0.02859	0.0035122	0.0018041	0.0020448	0.0024567
0.03145	0.0032573	0.0017894	0.0020282	0.0024202
0.03431	0.0030307	0.0017747	0.0020115	0.0023840
0.03717	0.0028324	0.0017601	0.0019949	0.0023481
0.04003	0.0026908	0.0017454	0.0019783	0.0023124
0.04288	0.0025718	0.0017307	0.0019616	0.0022769
0.04574	0.0024755	0.0017160	0.0019450	0.0022417
0.04860	0.0023849	0.0017014	0.0019284	0.0022067
0.05146	0.0022999	0.0016867	0.0019117	0.0021720
0.05432	0.0022262	0.0016720	0.0018951	0.0021376
0.05718	0.0021583	0.0016573	0.0018784	0.0021033
0.06290	0.0020337	0.0016280	0.0018452	0.0020357
0.06862	0.0019090	0.0015986	0.0018119	0.0019690
0.07433	0.0017957	0.0015693	0.0017786	0.0019033
0.08005	0.0016938	0.0015399	0.0017454	0.0018387
0.08577	0.0015974	0.0015105	0.0017121	0.0017750
0.09149	0.0015068	0.0014812	0.0016788	0.0017124
0.09721	0.0014218	0.0014518	0.0016455	0.0016508
0.10292	0.0013312	0.0014225	0.0016123	0.0015903
0.10864	0.0012457	0.0013931	0.0015790	0.0015307
0.11436	0.0011669	0.0013638	0.0015457	0.0014722
0.12580	0.0010196	0.0013051	0.0014792	0.0013583
0.13723	0.0008894	0.0012463	0.0014126	0.0012486
0.14867	0.0007760	0.0011876	0.0013461	0.0011430
0.16010	0.0006798	0.0011289	0.0012795	0.0010418
0.17154	0.0005948	0.0010702	0.0012130	0.0009448
0.18298	0.0005155	0.0010115	0.0011465	0.0008521
0.19441	0.0004362	0.0009528	0.0010799	0.0007638
0.20585	0.0003682	0.0008941	0.0010134	0.0006798
0.21728	0.0003059	0.0008354	0.0009468	0.0006004

[MODEL A]
MEAN DEVIATION = 0.0014892 ROOT MEAN SQUARE DEVIATION = 0.0028397
RESIDUAL SUM OF SQUARES = 0.29836E-03
MEAN PERCENT DEVIATION = 47.7267456

[MODEL B]
MEAN DEVIATION = 0.0014132 ROOT MEAN SQUARE DEVIATION = 0.0027331
RESIDUAL SUM OF SQUARES = 0.27639E-03
MEAN PERCENT DEVIATION = 51.2974701

[MODEL C]
MEAN DEVIATION = 0.0011621 ROOT MEAN SQUARE DEVIATION = 0.0025108
RESIDUAL SUM OF SQUARES = 0.23324E-03
MEAN PERCENT DEVIATION = 33.4808197

RUN NUMBER = 149-G 5 10 71

X(I), GMS H2SO4/GM C	RATE, GMS H2SO4/GM C-MIN	[MODEL A] CALCULATED RATE, GMS H2SO4/GM C-MIN	[MODEL B] CALCULATED RATE, GMS H2SO4/GM C-MIN	[MODEL C] CALCULATED RATE, GMS H2SO4/GM C-MIN
0.00569	0.0151080	0.0015665	0.0017045	0.0021036
0.00682	0.0137051	0.0015618	0.0016993	0.0020919
0.00796	0.0124101	0.0015570	0.0016941	0.0020802
0.00910	0.0112231	0.0015523	0.0016889	0.0020686
0.01023	0.0101979	0.0015475	0.0016837	0.0020570
0.01137	0.0092536	0.0015427	0.0016786	0.0020455
0.01421	0.0071223	0.0015308	0.0016656	0.0020167
0.01706	0.0054766	0.0015189	0.0016527	0.0019881
0.01990	0.0042356	0.0015071	0.0016397	0.0019597
0.02274	0.0034902	0.0014952	0.0016268	0.0019315
0.02559	0.0029137	0.0014833	0.0016138	0.0019034
0.02843	0.0025899	0.0014714	0.0016009	0.0018756
0.03127	0.0021960	0.0014595	0.0015879	0.0018479
0.03412	0.0020234	0.0014476	0.0015750	0.0018204
0.03696	0.0019041	0.0014357	0.0015621	0.0017931
0.03980	0.0018211	0.0014238	0.0015491	0.0017660
0.04264	0.0017563	0.0014119	0.0015362	0.0017391
0.04549	0.0017131	0.0014000	0.0015232	0.0017124
0.04833	0.0016781	0.0013881	0.0015103	0.0016859
0.05117	0.0016430	0.0013762	0.0014973	0.0016595
0.05402	0.0016106	0.0013643	0.0014844	0.0016334
0.05686	0.0015783	0.0013524	0.0014714	0.0016074
0.06255	0.0015162	0.0013286	0.0014455	0.0015560
0.06823	0.0014569	0.0013048	0.0014197	0.0015054
0.07392	0.0014029	0.0012810	0.0013938	0.0014555
0.07960	0.0013516	0.0012572	0.0013679	0.0014064
0.08529	0.0013058	0.0012334	0.0013420	0.0013581
0.09098	0.0012518	0.0012096	0.0013161	0.0013105
0.09666	0.0011979	0.0011858	0.0012902	0.0012637
0.10235	0.0011439	0.0011620	0.0012643	0.0012177
0.10803	0.0010872	0.0011382	0.0012384	0.0011724
0.11372	0.0010279	0.0011144	0.0012125	0.0011280
0.12509	0.0009065	0.0010668	0.0011607	0.0010414
0.13646	0.0007878	0.0010192	0.0011090	0.0009580
0.14784	0.0006771	0.0009716	0.0010572	0.0008777
0.15921	0.0005774	0.0009240	0.0010054	0.0008006
0.17058	0.0004856	0.0008764	0.0009536	0.0007268
0.18195	0.0004047	0.0008289	0.0009018	0.0006562
0.19332	0.0003345	0.0007813	0.0008500	0.0005889
0.20470	0.0002779	0.0007337	0.0007983	0.0005249

[MODEL A]
MEAN DEVIATION = 0.0011285 ROOT MEAN SQUARE DEVIATION = 0.0023497
RESIDUAL SUM OF SQUARES = 0.19876E-03
MEAN PERCENT DEVIATION = 39.9634857

[MODEL B]
MEAN DEVIATION = 0.0010806 ROOT MEAN SQUARE DEVIATION = 0.0022951
RESIDUAL SUM OF SQUARES = 0.18962E-03
MEAN PERCENT DEVIATION = 40.9921875

[MODEL C]
MEAN DEVIATION = 0.0009072 ROOT MEAN SQUARE DEVIATION = 0.0021485
RESIDUAL SUM OF SQUARES = 0.16619E-03
MEAN PERCENT DEVIATION = 25.7657623

RUN NUMBER = 150-G 5 11 71

X(I), GMS H2SO4/GM C	RATE, GMS H2SO4/GM C-MIN	[MODEL A] CALCULATED RATE, GMS H2SO4/GM C-MIN	[MODEL B] CALCULATED RATE, GMS H2SO4/GM C-MIN	[MODEL C] CALCULATED RATE, GMS H2SO4/GM C-MIN
0.00427	0.0162019	0.0010133	0.0010097	0.0011833
0.00533	0.0132240	0.0010104	0.0010069	0.0011771
0.00640	0.0112303	0.0010075	0.0010040	0.0011710
0.00747	0.0095647	0.0010047	0.0010011	0.0011649
0.00853	0.0081514	0.0010018	0.0009983	0.0011588
0.00960	0.0069400	0.0009989	0.0009954	0.0011527
0.01067	0.0059054	0.0009960	0.0009925	0.0011467
0.01333	0.0039369	0.0009889	0.0009854	0.0011316
0.01600	0.0026751	0.0009817	0.0009782	0.0011165
0.01867	0.0018675	0.0009745	0.0009711	0.0011016
0.02133	0.0014637	0.0009673	0.0009639	0.0010868
0.02400	0.0012113	0.0009601	0.0009567	0.0010720
0.02666	0.0011180	0.0009529	0.0009496	0.0010574
0.02933	0.0010423	0.0009457	0.0009424	0.0010428
0.03200	0.0010120	0.0009385	0.0009352	0.0010284
0.03466	0.0009994	0.0009313	0.0009281	0.0010140
0.03733	0.0009842	0.0009241	0.0009209	0.0009997
0.04000	0.0009792	0.0009169	0.0009137	0.0009855
0.04266	0.0009691	0.0009097	0.0009066	0.0009714
0.04533	0.0009590	0.0009026	0.0008994	0.0009574
0.04800	0.0009489	0.0008954	0.0008922	0.0009435
0.05066	0.0009413	0.0008882	0.0008851	0.0009297
0.05333	0.0009312	0.0008810	0.0008779	0.0009160
0.05866	0.0009110	0.0008666	0.0008636	0.0008888
0.06400	0.0008984	0.0008522	0.0008492	0.0008620
0.06933	0.0008732	0.0008378	0.0008349	0.0008355
0.07466	0.0008505	0.0008235	0.0008206	0.0008095
0.07999	0.0008303	0.0008091	0.0008062	0.0007838
0.08533	0.0008101	0.0007947	0.0007919	0.0007585
0.09066	0.0007849	0.0007803	0.0007776	0.0007336
0.09599	0.0007621	0.0007659	0.0007632	0.0007090
0.10133	0.0007420	0.0007515	0.0007489	0.0006848
0.10666	0.0007167	0.0007372	0.0007346	0.0006610
0.11733	0.0006663	0.0007084	0.0007059	0.0006146
0.12799	0.0006157	0.0006796	0.0006772	0.0005697
0.13866	0.0005552	0.0006509	0.0006486	0.0005264
0.14932	0.0004946	0.0006221	0.0006199	0.0004846
0.15999	0.0004189	0.0005933	0.0005913	0.0004444
0.17066	0.0003407	0.0005646	0.0005626	0.0004057
0.18132	0.0002624	0.0005358	0.0005339	0.0003687

[MODEL A]
MEAN DEVIATION = 0.0003888 ROOT MEAN SQUARE DEVIATION = 0.0010436
RESIDUAL SUM OF SQUARES = 0.37030E-04
MEAN PERCENT DEVIATION = 20.6231384

[MODEL B]
MEAN DEVIATION = 0.0003903 ROOT MEAN SQUARE DEVIATION = 0.0010447
RESIDUAL SUM OF SQUARES = 0.37110E-04
MEAN PERCENT DEVIATION = 20.6951752

[MODEL C]
MEAN DEVIATION = 0.0003336 ROOT MEAN SQUARE DEVIATION = 0.0009962
RESIDUAL SUM OF SQUARES = 0.33741E-04
MEAN PERCENT DEVIATION = 13.1673651

RUN NUMBER = 151-G 5 12 71

X(I),GMS H2SO4/GM C	RATE, GMS H2SO4/GM C-MIN	[MODEL A] CALCULATED RATE, GMS H2SO4/GM C-MIN	[MODEL B] CALCULATED RATE, GMS H2SO4/GM C-MIN	[MODEL C] CALCULATED RATE, GMS H2SO4/GM C-MIN
0.00164	0.0028832	0.0003256	0.0003817	0.0004402
0.00327	0.0020756	0.0003242	0.0003800	0.0004367
0.00491	0.0014617	0.0003228	0.0003784	0.0004332
0.00655	0.0010903	0.0003214	0.0003767	0.0004298
0.00819	0.0009207	0.0003200	0.0003751	0.0004263
0.00982	0.0008076	0.0003186	0.0003734	0.0004229
0.01146	0.0007268	0.0003172	0.0003718	0.0004195
0.01310	0.0006663	0.0003157	0.0003701	0.0004161
0.01473	0.0006219	0.0003143	0.0003685	0.0004127
0.01637	0.0005896	0.0003129	0.0003668	0.0004093
0.02046	0.0005330	0.0003094	0.0003627	0.0004009
0.02456	0.0005047	0.0003059	0.0003586	0.0003926
0.02865	0.0004845	0.0003024	0.0003544	0.0003844
0.03274	0.0004765	0.0002988	0.0003503	0.0003762
0.03684	0.0004684	0.0002953	0.0003462	0.0003682
0.04093	0.0004644	0.0002918	0.0003420	0.0003602
0.04502	0.0004604	0.0002883	0.0003379	0.0003522
0.04912	0.0004563	0.0002847	0.0003338	0.0003444
0.05321	0.0004483	0.0002812	0.0003297	0.0003366
0.05730	0.0004442	0.0002777	0.0003255	0.0003290
0.06139	0.0004361	0.0002742	0.0003214	0.0003214
0.06549	0.0004280	0.0002707	0.0003173	0.0003139
0.06958	0.0004199	0.0002671	0.0003131	0.0003064
0.07367	0.0004119	0.0002636	0.0003090	0.0002991
0.07777	0.0004078	0.0002601	0.0003049	0.0002918
0.08186	0.0003957	0.0002566	0.0003008	0.0002846
0.09005	0.0003796	0.0002495	0.0002925	0.0002705
0.09823	0.0003635	0.0002425	0.0002842	0.0002567
0.10642	0.0003472	0.0002354	0.0002760	0.0002432
0.11460	0.0003311	0.0002284	0.0002677	0.0002300
0.12279	0.0003109	0.0002213	0.0002595	0.0002172
0.13098	0.0002908	0.0002143	0.0002512	0.0002047
0.13916	0.0002665	0.0002073	0.0002430	0.0001926
0.14735	0.0002463	0.0002002	0.0002347	0.0001808

[MODEL A]
MEAN DEVIATION = 0.0001712 ROOT MEAN SQUARE DEVIATION = 0.0001892
RESIDUAL SUM OF SQUARES = 0.10021E-05
MEAN PERCENT DEVIATION = 36.7831726

[MODEL B]
MEAN DEVIATION = 0.0001245 ROOT MEAN SQUARE DEVIATION = 0.0001456
RESIDUAL SUM OF SQUARES = 0.59380E-06
MEAN PERCENT DEVIATION = 25.8966827

[MODEL C]
MEAN DEVIATION = 0.0001238 ROOT MEAN SQUARE DEVIATION = 0.0001339
RESIDUAL SUM OF SQUARES = 0.50217E-06
MEAN PERCENT DEVIATION = 27.5743561

RUN NUMBER = 152-G 5 14 71

X(I), GMS H2SO4/GM C	RATE, GMS H2SO4/GM C-MIN	[MODEL A] CALCULATED RATE, GMS H2SO4/GM C-MIN	[MODEL B] CALCULATED RATE, GMS H2SO4/GM C-MIN	[MODEL C] CALCULATED RATE, GMS H2SO4/GM C-MIN
0.00165	0.0007334	0.0002654	0.0002987	0.0003358
0.00331	0.0006086	0.0002643	0.0002974	0.0003331
0.00496	0.0005618	0.0002631	0.0002961	0.0003304
0.00661	0.0005072	0.0002619	0.0002948	0.0003277
0.00827	0.0004760	0.0002608	0.0002935	0.0003251
0.00992	0.0004526	0.0002596	0.0002921	0.0003225
0.01157	0.0004292	0.0002585	0.0002908	0.0003198
0.01323	0.0004962	0.0002573	0.0002895	0.0003172
0.01488	0.0004018	0.0002561	0.0002882	0.0003146
0.01653	0.0003902	0.0002550	0.0002869	0.0003120
0.02066	0.0003667	0.0002521	0.0002837	0.0003055
0.02480	0.0003472	0.0002492	0.0002804	0.0002991
0.02893	0.0003277	0.0002463	0.0002771	0.0002928
0.03306	0.0003121	0.0002434	0.0002739	0.0002865
0.03720	0.0003004	0.0002405	0.0002706	0.0002803
0.04133	0.0002887	0.0002376	0.0002674	0.0002741
0.04546	0.0002731	0.0002347	0.0002641	0.0002681
0.04960	0.0002614	0.0002318	0.0002608	0.0002620
0.05373	0.0002536	0.0002289	0.0002576	0.0002561
0.05786	0.0002457	0.0002260	0.0002543	0.0002501
0.06199	0.0002380	0.0002231	0.0002510	0.0002443
0.06613	0.0002302	0.0002202	0.0002478	0.0002385
0.07026	0.0002224	0.0002173	0.0002445	0.0002328
0.07439	0.0002185	0.0002144	0.0002412	0.0002272
0.07853	0.0002107	0.0002115	0.0002380	0.0002216
0.08266	0.0002028	0.0002086	0.0002347	0.0002160
0.09093	0.0001951	0.0002028	0.0002282	0.0002052
0.09919	0.0001872	0.0001970	0.0002217	0.0001946
0.10746	0.0001795	0.0001912	0.0002151	0.0001842
0.11572	0.0001717	0.0001854	0.0002086	0.0001741
0.12399	0.0001599	0.0001796	0.0002021	0.0001643
0.13226	0.0001522	0.0001738	0.0001956	0.0001547

[MODEL A]
MEAN DEVIATION = 0.0000539 ROOT MEAN SQUARE DEVIATION = 0.0000811
RESIDUAL SUM OF SQUARES = 0.17109E-06
MEAN PERCENT DEVIATION = 15.9290390

[MODEL B]
MEAN DEVIATION = 0.0000475 ROOT MEAN SQUARE DEVIATION = 0.0000663
RESIDUAL SUM OF SQUARES = 0.11412E-06
MEAN PERCENT DEVIATION = 16.0720062

[MODEL C]
MEAN DEVIATION = 0.0000292 ROOT MEAN SQUARE DEVIATION = 0.0000508
RESIDUAL SUM OF SQUARES = 0.67109E-07
MEAN PERCENT DEVIATION = 8.2095785

RUN NUMBER = 153-G 5 18 71

X(I), GMS H2SO4/GM C	RATE, GMS H2SO4/GM C-MIN	[MODEL A] CALCULATED RATE, GMS H2SO4/GM C-MIN	[MODEL B] CALCULATED RATE, GMS H2SO4/GM C-MIN	[MODEL C] CALCULATED RATE, GMS H2SO4/GM C-MIN
0.00612	0.0178058	0.0019194	0.0021755	0.0027517
0.00735	0.0159658	0.0019131	0.0021684	0.0027352
0.00857	0.0141259	0.0019069	0.0021613	0.0027188
0.00980	0.0125234	0.0019006	0.0021541	0.0027024
0.01102	0.0109802	0.0018943	0.0021470	0.0026861
0.01225	0.0096151	0.0018880	0.0021399	0.0026698
0.01531	0.0067068	0.0018723	0.0021221	0.0026293
0.01837	0.0043921	0.0018566	0.0021043	0.0025890
0.02143	0.0034123	0.0018408	0.0020864	0.0025490
0.02450	0.0027599	0.0018251	0.0020686	0.0025093
0.02756	0.0024572	0.0018094	0.0020508	0.0024699
0.03062	0.0022514	0.0017937	0.0020330	0.0024308
0.03368	0.0020654	0.0017780	0.0020152	0.0023919
0.03674	0.0020120	0.0017622	0.0019974	0.0023534
0.03981	0.0019646	0.0017465	0.0019795	0.0023151
0.04287	0.0019230	0.0017308	0.0019617	0.0022771
0.04593	0.0018844	0.0017151	0.0019439	0.0022394
0.04899	0.0018518	0.0016994	0.0019261	0.0022020
0.05205	0.0018191	0.0016836	0.0019083	0.0021649
0.05512	0.0017924	0.0016679	0.0018905	0.0021280
0.05818	0.0017628	0.0016522	0.0018726	0.0020915
0.06124	0.0017390	0.0016365	0.0018548	0.0020552
0.06736	0.0016975	0.0016050	0.0018192	0.0019835
0.07349	0.0016559	0.0015736	0.0017835	0.0019130
0.07961	0.0016144	0.0015422	0.0017479	0.0018436
0.08574	0.0015728	0.0015107	0.0017123	0.0017754
0.09186	0.0015254	0.0014793	0.0016766	0.0017084
0.09798	0.0014838	0.0014478	0.0016410	0.0016425
0.10411	0.0014363	0.0014164	0.0016054	0.0015778
0.11023	0.0013829	0.0013850	0.0015697	0.0015143
0.11636	0.0013355	0.0013535	0.0015341	0.0014520
0.12248	0.0012879	0.0013221	0.0014985	0.0013909
0.13473	0.0011811	0.0012592	0.0014272	0.0012722
0.14698	0.0010802	0.0011963	0.0013559	0.0011584
0.15922	0.0009734	0.0011334	0.0012847	0.0010494
0.17147	0.0008665	0.0010706	0.0012134	0.0009453
0.18372	0.0007538	0.0010077	0.0011421	0.0008462
0.19597	0.0006410	0.0009448	0.0010709	0.0007521
0.20822	0.0005401	0.0008819	0.0009996	0.0006630
0.22046	0.0004573	0.0008190	0.0009283	0.0005791
0.23271	0.0003799	0.0007562	0.0008570	0.0005003
0.24496	0.0003244	0.0006933	0.0007858	0.0004268
0.25721	0.0002849	0.0006304	0.0007145	0.0003587
0.26946	0.0002493	0.0005675	0.0006432	0.0002959
0.28170	0.0002255	0.0005046	0.0005720	0.0002387
0.29395	0.0002077	0.0004418	0.0005007	0.0001871
0.30620	0.0001899	0.0003789	0.0004294	0.0001413
0.31845	0.0001662	0.0003160	0.0003582	0.0001014
0.33070	0.0001543	0.0002531	0.0002869	0.0000675
0.34294	0.0001424	0.0001902	0.0002156	0.0000400

[MODEL A]
MEAN DEVIATION = 0.0007441 ROOT MEAN SQUARE DEVIATION = 0.0019649
RESIDUAL SUM OF SQUARES = 0.17760E-03
MEAN PERCENT DEVIATION = 39.2494659

[MODEL B]
MEAN DEVIATION = 0.0007402 ROOT MEAN SQUARE DEVIATION = 0.0018948
RESIDUAL SUM OF SQUARES = 0.16515E-03
MEAN PERCENT DEVIATION = 47.5648651

[MODEL C]
MEAN DEVIATION = 0.0006324 ROOT MEAN SQUARE DEVIATION = 0.0017408
RESIDUAL SUM OF SQUARES = 0.13940E-03
MEAN PERCENT DEVIATION = 22.1421509

RUN NUMBER = 157-G 5 31 71

X(I),GMS H2SO4/GM C	RATE, GMS H2SO4/GM C-MIN	[MODEL A] CALCULATED RATE, GMS H2SO4/GM C-MIN	[MODEL B] CALCULATED RATE, GMS H2SO4/GM C-MIN	[MODEL C] CALCULATED RATE, GMS H2SO4/GM C-MIN
0.00272	0.0052234	0.0012000	0.0013534	0.0016400
0.00407	0.0039256	0.0011956	0.0013485	0.0016292
0.00543	0.0025306	0.0011913	0.0013436	0.0016184
0.00679	0.0014275	0.0011870	0.0013388	0.0016077
0.00815	0.0012912	0.0011827	0.0013339	0.0015970
0.00951	0.0012328	0.0011784	0.0013290	0.0015864
0.01087	0.0011939	0.0011740	0.0013241	0.0015757
0.01222	0.0011615	0.0011697	0.0013193	0.0015651
0.01358	0.0011420	0.0011654	0.0013144	0.0015546
0.01698	0.0011096	0.0011546	0.0013022	0.0015283
0.02037	0.0011031	0.0011438	0.0012900	0.0015023
0.02377	0.0010966	0.0011330	0.0012779	0.0014764
0.02716	0.0010901	0.0011222	0.0012657	0.0014508
0.03056	0.0010771	0.0011114	0.0012535	0.0014253
0.03395	0.0010706	0.0011006	0.0012413	0.0014001
0.03735	0.0010576	0.0010898	0.0012291	0.0013750
0.04075	0.0010447	0.0010790	0.0012170	0.0013502
0.04414	0.0010382	0.0010682	0.0012048	0.0013256
0.04754	0.0010317	0.0010574	0.0011926	0.0013011
0.05093	0.0010187	0.0010466	0.0011804	0.0012769
0.05433	0.0010122	0.0010358	0.0011682	0.0012529
0.05772	0.0009992	0.0010250	0.0011561	0.0012291
0.06112	0.0009863	0.0010142	0.0011439	0.0012055
0.06451	0.0009798	0.0010034	0.0011317	0.0011821
0.06791	0.0009668	0.0009926	0.0011195	0.0011590
0.07470	0.0009408	0.0009710	0.0010952	0.0011132
0.08149	0.0009149	0.0009494	0.0010708	0.0010683
0.08828	0.0008889	0.0009278	0.0010464	0.0010243
0.09507	0.0008630	0.0009062	0.0010221	0.0009811
0.10186	0.0008371	0.0008846	0.0009977	0.0009387
0.10866	0.0008110	0.0008630	0.0009734	0.0008972
0.11545	0.0007851	0.0008414	0.0009490	0.0008565
0.12224	0.0007592	0.0008198	0.0009246	0.0008167
0.12903	0.0007397	0.0007982	0.0009003	0.0007778
0.13582	0.0007203	0.0007766	0.0008759	0.0007397
0.14940	0.0006878	0.0007334	0.0008272	0.0006661
0.16298	0.0006489	0.0006902	0.0007785	0.0005961
0.17657	0.0006034	0.0006470	0.0007297	0.0005296
0.19015	0.0005516	0.0006038	0.0006810	0.0004667
0.20373	0.0004996	0.0005606	0.0006323	0.0004074
0.21731	0.0004477	0.0005174	0.0005836	0.0003518

[MODEL A]
MEAN DEVIATION = 0.0000383 ROOT MEAN SQUARE DEVIATION = 0.0000406
RESIDUAL SUM OF SQUARES = 0.57829E-07
MEAN PERCENT DEVIATION = 4.8161469

[MODEL B]
MEAN DEVIATION = 0.0001583 ROOT MEAN SQUARE DEVIATION = 0.0001591
RESIDUAL SUM OF SQUARES = 0.88629E-06
MEAN PERCENT DEVIATION = 18.1086273

[MODEL C]
MEAN DEVIATION = 0.0002095 ROOT MEAN SQUARE DEVIATION = 0.0002460
RESIDUAL SUM OF SQUARES = 0.21175E-05
MEAN PERCENT DEVIATION = 21.3031921

RUN NUMBER = 158-G 6 1 71

X(I),GMS H2SO4/GM C	RATE, GMS H2SO4/GM C-MIN	[MODEL A] CALCULATED RATE, GMS H2SO4/GM C-MIN	[MODEL B] CALCULATED RATE, GMS H2SO4/GM C-MIN	[MODEL C] CALCULATED RATE, GMS H2SO4/GM C-MIN
0.00155	0.0005398	0.0001711	0.0001763	0.0001877
0.00310	0.0004289	0.0001704	0.0001756	0.0001862
0.00466	0.0003675	0.0001697	0.0001749	0.0001848
0.00621	0.0003394	0.0001690	0.0001741	0.0001835
0.00776	0.0003180	0.0001683	0.0001734	0.0001821
0.00931	0.0002995	0.0001676	0.0001727	0.0001807
0.01087	0.0002840	0.0001669	0.0001720	0.0001793
0.01242	0.0002700	0.0001662	0.0001713	0.0001779
0.01397	0.0002581	0.0001655	0.0001705	0.0001765
0.01552	0.0002463	0.0001648	0.0001698	0.0001752
0.01940	0.0002233	0.0001630	0.0001680	0.0001718
0.02329	0.0002048	0.0001613	0.0001662	0.0001684
0.02717	0.0001893	0.0001595	0.0001644	0.0001651
0.03105	-0.0001775	0.0001577	0.0001626	0.0001618
0.03493	-0.0001664	0.0001560	0.0001608	0.0001585
0.03881	0.0001563	0.0001542	0.0001590	0.0001552
0.04269	0.0001486	0.0001525	0.0001572	0.0001520
0.04657	0.0001413	0.0001507	0.0001553	0.0001488
0.05045	0.0001346	0.0001490	0.0001535	0.0001457
0.05433	0.0001294	0.0001472	0.0001517	0.0001426
0.05821	0.0001243	0.0001455	0.0001499	0.0001395
0.06210	0.0001198	0.0001437	0.0001481	0.0001364
0.06598	0.0001161	0.0001420	0.0001463	0.0001334
0.06986	0.0001124	0.0001402	0.0001445	0.0001304
0.07374	0.0001087	0.0001384	0.0001427	0.0001274
0.07762	0.0001050	0.0001367	0.0001409	0.0001245
0.08538	0.0000991	0.0001332	0.0001373	0.0001187
0.09314	0.0000924	0.0001297	0.0001336	0.0001130
0.10091	0.0000872	0.0001262	0.0001300	0.0001075
0.10867	0.0000821	0.0001227	0.0001264	0.0001021
0.11643	0.0000769	0.0001192	0.0001228	0.0000968
0.12419	0.0000725	0.0001156	0.0001192	0.0000916
0.13195	0.0000681	0.0001121	0.0001156	0.0000866
0.13972	0.0000636	0.0001086	0.0001119	0.0000817
0.14748	0.0000591	0.0001051	0.0001083	0.0000770

[MODEL A]
MEAN DEVIATION = 0.0000609 ROOT MEAN SQUARE DEVIATION = 0.0000988
RESIDUAL SUM OF SQUARES = 0.28291E-06
MEAN PERCENT DEVIATION = 17.3567505

[MODEL B]
MEAN DEVIATION = 0.0000627 ROOT MEAN SQUARE DEVIATION = 0.0000998
RESIDUAL SUM OF SQUARES = 0.28891E-06
MEAN PERCENT DEVIATION = 19.3544617

[MODEL C]
MEAN DEVIATION = 0.0000497 ROOT MEAN SQUARE DEVIATION = 0.0000950
RESIDUAL SUM OF SQUARES = 0.26197E-06
MEAN PERCENT DEVIATION = 5.0350761

RUN NUMBER = 160-G 6 9 71

X(I), GMS H2SO4/GM C	RATE, GMS H2SO4/GM C-MIN	[MODEL A] CALCULATED RATE, GMS H2SO4/GM C-MIN	[MODEL B] CALCULATED RATE, GMS H2SO4/GM C-MIN	[MODEL C] CALCULATED RATE, GMS H2SO4/GM C-MIN
0.00322	0.0030573	0.0005374	0.0006061	0.0007335
0.00483	0.0021512	0.0005351	0.0006035	0.0007279
0.00643	0.0015207	0.0005328	0.0006009	0.0007222
0.00804	0.0011031	0.0005305	0.0005983	0.0007165
0.00965	0.0008377	0.0005282	0.0005957	0.0007109
0.01126	0.0008274	0.0005259	0.0005932	0.0007052
0.01287	0.0007328	0.0005236	0.0005906	0.0006996
0.01448	0.0006697	0.0005213	0.0005880	0.0006940
0.01608	0.0006146	0.0005190	0.0005854	0.0006884
0.02010	0.0005358	0.0005133	0.0005789	0.0006746
0.02413	0.0005043	0.0005076	0.0005725	0.0006609
0.02815	0.0004866	0.0005018	0.0005660	0.0006473
0.03217	0.0004728	0.0004961	0.0005595	0.0006336
0.03619	0.0004570	0.0004904	0.0005531	0.0006204
0.04021	0.0004491	0.0004846	0.0005466	0.0006072
0.04423	0.0004334	0.0004789	0.0005401	0.0005941
0.04825	0.0004255	0.0004732	0.0005337	0.0005812
0.05227	0.0004176	0.0004674	0.0005272	0.0005684
0.05629	0.0004097	0.0004617	0.0005207	0.0005557
0.06031	0.0004019	0.0004560	0.0005142	0.0005431
0.06434	0.0003861	0.0004502	0.0005078	0.0005307
0.06836	0.0003782	0.0004445	0.0005013	0.0005184
0.07238	0.0003743	0.0004388	0.0004948	0.0005062
0.07640	0.0003703	0.0004330	0.0004884	0.0004941
0.08042	0.0003625	0.0004273	0.0004819	0.0004822
0.08846	0.0003546	0.0004158	0.0004690	0.0004588
0.09650	0.0003467	0.0004043	0.0004560	0.0004359
0.10455	0.0003388	0.0003929	0.0004431	0.0004135
0.11259	0.0003349	0.0003814	0.0004302	0.0003917
0.12063	0.0003309	0.0003699	0.0004172	0.0003704
0.12867	0.0003309	0.0003585	0.0004043	0.0003497

[MODEL A]
MEAN DEVIATION = 0.0000670 ROOT MEAN SQUARE DEVIATION = 0.0000914
RESIDUAL SUM OF SQUARES = 0.21707E-06
MEAN PERCENT DEVIATION = 13.8535995

[MODEL B]
MEAN DEVIATION = 0.0001035 ROOT MEAN SQUARE DEVIATION = 0.0001095
RESIDUAL SUM OF SQUARES = 0.31192E-06
MEAN PERCENT DEVIATION = 24.1104126

[MODEL C]
MEAN DEVIATION = 0.0001149 ROOT MEAN SQUARE DEVIATION = 0.0001240
RESIDUAL SUM OF SQUARES = 0.39982E-06
MEAN PERCENT DEVIATION = 26.8411560

RUN NUMBER = 161-G 6 10 71

X(I), GMS H2SO4/GM C	RATE, GMS H2SO4/GM C-MIN	[MODEL A] CALCULATED RATE, GMS H2SO4/GM C-MIN	[MODEL B] CALCULATED RATE, GMS H2SO4/GM C-MIN	[MODEL C] CALCULATED RATE, GMS H2SO4/GM C-MIN
0.00292	0.0059734	0.0008920	0.0010061	0.0012186
0.00438	0.0042877	0.0008886	0.0010022	0.0012100
0.00584	0.0030784	0.0008851	0.0009983	0.0012014
0.00730	0.0019790	0.0008817	0.0009944	0.0011928
0.00876	0.0012460	0.0008782	0.0009905	0.0011843
0.01022	0.0010481	0.0008748	0.0009866	0.0011757
0.01168	0.0009455	0.0008713	0.0009827	0.0011673
0.01315	0.0008722	0.0008679	0.0009788	0.0011588
0.01461	0.0008429	0.0008644	0.0009749	0.0011504
0.01826	0.0008063	0.0008558	0.0009652	0.0011294
0.02191	0.0007843	0.0008471	0.0009554	0.0011087
0.02556	0.0007623	0.0008385	0.0009457	0.0010881
0.02921	0.0007549	0.0008299	0.0009359	0.0010676
0.03286	0.0007402	0.0008212	0.0009262	0.0010474
0.03651	0.0007256	0.0008126	0.0009165	0.0010273
0.04017	0.0007182	0.0008039	0.0009067	0.0010074
0.04382	0.0007036	0.0007953	0.0008970	0.0009877
0.04747	0.0006963	0.0007867	0.0008872	0.0009681
0.05112	0.0006963	0.0007780	0.0008775	0.0009488
0.05477	0.0006890	0.0007694	0.0008677	0.0009296
0.05842	0.0006890	0.0007607	0.0008580	0.0009106
0.06208	0.0006817	0.0007521	0.0008483	0.0008917
0.06573	0.0006817	0.0007435	0.0008385	0.0008731
0.06938	0.0006743	0.0007348	0.0008288	0.0008546
0.07303	0.0006670	0.0007262	0.0008190	0.0008363
0.08033	0.0006597	0.0007089	0.0007995	0.0008003
0.08764	0.0006523	0.0006916	0.0007801	0.0007649
0.09494	0.0006376	0.0006744	0.0007606	0.0007303
0.10224	0.0006230	0.0006571	0.0007411	0.0006965
0.10954	0.0006156	0.0006398	0.0007216	0.0006633
0.11685	0.0006010	0.0006225	0.0007021	0.0006309
0.12415	0.0005864	0.0006053	0.0006826	0.0005992
0.13145	0.0005717	0.0005880	0.0006631	0.0005683
0.13876	0.0005570	0.0005707	0.0006437	0.0005381
0.14606	0.0005350	0.0005534	0.0006242	0.0005087
0.16067	0.0004911	0.0005189	0.0005852	0.0004521
0.17527	0.0004471	0.0004843	0.0005462	0.0003985
0.18988	0.0003958	0.0004498	0.0005073	0.0003480

[MODEL A]
MEAN DEVIATION = 0.0000561 ROOT MEAN SQUARE DEVIATION = 0.0000651
RESIDUAL SUM OF SQUARES = 0.13990E-06
MEAN PERCENT DEVIATION = 8.0388994

[MODEL B]
MEAN DEVIATION = 0.0001371 ROOT MEAN SQUARE DEVIATION = 0.0001434
RESIDUAL SUM OF SQUARES = 0.67857E-06
MEAN PERCENT DEVIATION = 20.5054016

[MODEL C]
MEAN DEVIATION = 0.0001771 ROOT MEAN SQUARE DEVIATION = 0.0002095
RESIDUAL SUM OF SQUARES = 0.14490E-05
MEAN PERCENT DEVIATION = 24.4635620

RUN NUMBER 164-G 6 15 71

X(I),GMS H2SO4/GM C.	RATE, GMS H2SO4/GM C-MIN	[MODEL A] CALCULATED RATE, GMS H2SO4/GM C-MIN	[MODEL B] CALCULATED RATE, GMS H2SO4/GM C-MIN	[MODEL C] CALCULATED RATE, GMS H2SO4/GM C-MIN
0.00146	0.0018122	0.0006787	0.0007241	0.0008499
0.00292	0.0012529	0.0006760	0.0007213	0.0008439
0.00439	0.0008129	0.0006734	0.0007185	0.0008380
0.00585	0.0007085	0.0006708	0.0007157	0.0008320
0.00731	0.0006570	0.0006682	0.0007129	0.0008261
0.00877	0.0006190	0.0006656	0.0007101	0.0008201
0.01023	0.0006041	0.0006629	0.0007074	0.0008142
0.01170	0.0005892	0.0006603	0.0007046	0.0008084
0.01316	0.0005743	0.0006577	0.0007018	0.0008025
0.01462	0.0005668	0.0006551	0.0006990	0.0007966
0.01827	0.0005444	0.0006485	0.0006920	0.0007821
0.02193	0.0005369	0.0006420	0.0006850	0.0007677
0.02558	0.0005220	0.0006354	0.0006780	0.0007534
0.02924	0.0005146	0.0006289	0.0006710	0.0007393
0.03289	0.0005071	0.0006223	0.0006640	0.0007252
0.03655	0.0005034	0.0006158	0.0006570	0.0007113
0.04020	0.0005034	0.0006092	0.0006500	0.0006975
0.04386	0.0004996	0.0006026	0.0006430	0.0006839
0.04751	0.0004996	0.0005961	0.0006360	0.0006703
0.05117	0.0004996	0.0005895	0.0006290	0.0006569
0.05482	0.0004996	0.0005830	0.0006220	0.0006436
0.05848	0.0004996	0.0005764	0.0006151	0.0006304
0.06213	0.0004996	0.0005699	0.0006081	0.0006174
0.06579	0.0004996	0.0005633	0.0006011	0.0006044
0.06944	0.0004996	0.0005568	0.0005941	0.0005916
0.07310	0.0004996	0.0005502	0.0005871	0.0005790
0.08041	0.0004922	0.0005371	0.0005731	0.0005540
0.08772	0.0004847	0.0005240	0.0005591	0.0005295
0.09503	0.0004847	0.0005109	0.0005451	0.0005055
0.10234	0.0004773	0.0004978	0.0005312	0.0004820
0.10965	0.0004698	0.0004847	0.0005172	0.0004591
0.11696	0.0004661	0.0004716	0.0005032	0.0004366
0.12427	0.0004624	0.0004585	0.0004892	0.0004147
0.13158	0.0004549	0.0004454	0.0004752	0.0003932
0.13889	0.0004474	0.0004323	0.0004612	0.0003723
0.14620	0.0004325	0.0004192	0.0004473	0.0003519
0.16082	0.0004176	0.0003930	0.0004193	0.0003127
0.17544	0.0003953	0.0003667	0.0003913	0.0002756

[MODEL A]
MEAN DEVIATION = 0.0000628 ROOT MEAN SQUARE DEVIATION = 0.0000730
RESIDUAL SUM OF SQUARES = 0.17069E-06
MEAN PERCENT DEVIATION = 12.2738953

[MODEL B]
MEAN DEVIATION = 0.0000943 ROOT MEAN SQUARE DEVIATION = 0.0001070
RESIDUAL SUM OF SQUARES = 0.36657E-06
MEAN PERCENT DEVIATION = 18.3562317

[MODEL C]
MEAN DEVIATION = 0.0001336 ROOT MEAN SQUARE DEVIATION = 0.0001537
RESIDUAL SUM OF SQUARES = 0.75555E-06
MEAN PERCENT DEVIATION = 26.1430359

APPENDIX A-8

COMPARISON OF MULTIPLE REGRESSIONS TO 6 INCH DIAMETER FLUIDIZED BED RUNS

		Page
1.	Westvaco Model by Stepwise Regression Compared to Continuous SO_2 Sorber	121
2.	Westvaco Model by Multiple Regression Compared to Continuous SO_2 Sorber	128
3.	Westvaco Model by Multiple Regression (Loading Factor Order) Compared to Continuous SO_2 Sorber	135

APPENDIX A-8-1

WESTVACO MODEL BY STEPWISE REGRESSION
COMPARED TO CONTINUOUS SO_2 SORBER

Westvaco Model

$$\frac{dXv}{dt} = k\, e^{-E/RT} \left(1 - \frac{Xv}{0.38}\right) Y_{SO_2}^{n}\, Y_{O_2}^{m}\, Y_{H_2O}^{p}$$

where $-E/RT = 5520^{o}R$

$n = 0.50$

$m = 0.63$

$p = 0.73$

$k = 1.59(10^{-4})$ gms. H_2SO_4/gm. C-min.

SO2 SORBER DESIGN

RUN NUMBER SA-21 DATE 6 7 71

TOTAL CARBON RATE = 2.910 LBS/HR
OUTLET CARBON LOADING = 0.17889 LBS ACID/LB CARBON
HEIGHT OF CARBON/STAGE = 2.25 INCHES
DIAMETER OF VESSEL = 6.0 INCHES
CARBON USED = 96324.
TOTAL GAS FLOW RATE = 1247. SCFH
INLET SO2 CONCENTRATION = 2009. PPM
INLET NO CONCENTRATION = 150. PPM
INLET O2 VOLUME FRACTION = 0.0420
INLET H2O VOLUME FRACTION = 0.1300
OUTLET SO2 CONCENTRATION = 165. PPM

TEMPERATURE = 200.0 DEG. F

STAGE	SO2 CONCENTRATION PPM	ACID LOADING LBS ACID/LB CARBON
1	2009.	0.1788
2	1799.	0.1542
3	1574.	0.1279
4	1337.	0.1002
5	1093.	0.0715
6	847.	0.0427
7	608.	0.0147
8	386.	0.0
9	200.	0.0
0.22	165.0001	0.0

TOTAL CARBON REQUIRED = 20.75 INCHES
TOTAL STAGES REQUIRED ASSUMING 2.25 INCHES CARBON/STAGE = 9.22

SPACE VELOCITY = 3672. 1/HR

PRESSURE DROP ACROSS CARBON = 10.36 INCHES H2O
PRESSURE DROP ACROSS PLATES = 5.19 INCHES H2O
TOTAL PRESSURE DROP ACROSS STAGES = 15.56 INCHES H2O

RATE EXPRESSION USED IN DESIGN CALCULATIONS

```
RATEC(I)=COEFF * (1-X(I)/XS)**A * (YSO2**B) * (YO2**C) * (YH2O**D)
   WHERE COEFF=K * EXP(-E/R*(1/(T+460)))
```

T=	200.	XS=	0.38	YSO2=		YO2=	0.042	YH2O=	0.130
-E/R=	5520.	A=	1.000	B=	0.400	C=	0.630	D=	0.730
K=0.000159									

SO2 SORBER DESIGN

RUN NUMBER SA-22 DATE 6 15 71

TOTAL CARBON RATE = 3.260 LBS/HR
OUTLET CARBON LOADING = 0.22479 LBS ACID/LB CARBON
HEIGHT OF CARBON/STAGE = 2.35 INCHES
DIAMETER OF VESSEL = 6.0 INCHES
CARBON USED = 96324.
TOTAL GAS FLOW RATE - 1141. SCFH
INLET SO2 CONCENTRATION = 3946. PPM
INLET NO CONCENTRATION = 150. PPM
INLET O2 VOLUME FRACTION = 0.0420
INLET H2O VOLUME FRACTION = 0.1300
OUTLET SO2 CONCENTRATION = 1151. PPM

TEMPERATURE = 200.0 DEG. F

STAGE	SO2 CONCENTRATION PPM	ACID LOADING LBS ACID/LB CARBON
1	3946.	0.2248
2	3701.	0.2014
3	3427.	0.1751
4	3124.	0.1461
5	2791.	0.1142
6	2431.	0.0798
7	2049.	0.0432
8	1652.	0.0052
9	1252.	0.0
0.27	1151.0005	0.0

TOTAL CARBON REQUIRED = 21.78 INCHES
TOTAL STAGES REQUIRED ASSUMING 2.35 INCHES CARBON/STAGE = 9.27

SPACE VELOCITY = 3202. 1/HR

PRESSURE DROP ACROSS CARBON = 10.89 INCHES H2O
PRESSURE DROP ACROSS PLATES = 5.44 INCHES H2O
TOTAL PRESSURE DROP ACROSS STAGES = 16.33 INCHES H2O

RATE EXPRESSION USED IN DESIGN CALCULATIONS

```
RATEC(I)=COEFF * (1-X(I)/XS)**A * (YSO2**B) * (YO2**C) * (YH2O**D)
   WHERE COEFF=K * EXP(-E/R*(1/(T+460)))
```

T=	200.	XS=	0.38	YSO2=		YO2=	0.042	YH2O=	0.130
-E/R=	5520.	A=	1.000	B=	0.400	C=	0.630	D=	0.730
K=0.000159									

SO2 SORBER DESIGN

RUN NUMBER SA-23 DATE 6 16 71

TOTAL CARBON RATE = 3.350 LBS/HR
OUTLET CARBON LOADING = 0.16660 LBS ACID/LB CARBON
HEIGHT OF CARBON/STAGE = 2.40 INCHES
DIAMETER OF VESSEL = 6.0 INCHES
CARBON USED = 96324.
TOTAL GAS FLOW RATE = 1106. SCFH
INLET SO2 CONCENTRATION = 2009. PPM
INLET NO CONCENTRATION = 150. PPM
INLET O2 VOLUME FRACTION = 0.0420
INLET H2O VOLUME FRACTION = 0.1300
OUTLET SO2 CONCENTRATION = 91. PPM

TEMPERATURE = 200.0 DEG. F

STAGE	SO2 CONCENTRATION PPM	ACID LOADING LBS ACID/LB CARBON
1	2009.	0.1666
2	1742.	0.1425
3	1464.	0.1174
4	1179.	0.0917
5	895.	0.0660
6	622.	0.0414
7	375.	0.0191
8	169.	0.0005
0.48	91.0000	0.0

TOTAL CARBON REQUIRED = 20.36 INCHES
TOTAL STAGES REQUIRED ASSUMING 2.40 INCHES CARBON/STAGE = 8.48

SPACE VELOCITY = 3218 1/HR

PRESSURE DROP ACROSS CARBON = 10.18 INCHES H2O
PRESSURE DROP ACROSS PLATES = 5.09 INCHES H2O
TOTAL PRESSURE DROP ACROSS STAGES = 15.27 INCHES H2O

RATE EXPRESSION USED IN DESIGN CALCULATIONS

```
RATEC(I)=COEFF * (1-X(I)/XS)**A * (YSO2**B) * (YO2**C) * (YH2O**D)
   WHERE COEFF=K * EXP(-E/R*(1/(T+460)))
```

T=	200.	XS=	0.38	YSO2=		YO2=	0.042	YH2O=	0.130
-E/R=	5520.	A=	1.000	B=	0.400	C=	0.630	D=	0.730
K=0.000159									

SO2 SORBER DESIGN

RUN NUMBER SA-24 DATE 6 16 71

TOTAL CARBON RATE - 3.190 LBS/HR
OUTLET CARBON LOADING = 0.18834 LBS ACID/LB CARBON
HEIGHT OF CARBON/STAGE = 2.45 INCHES
DIAMETER OF VESSEL = 6.0 INCHES
CARBON USED = 96324.
TOTAL GAS FLOW RATE = 965. SCFH
INLET SO2 CONCENTRATION = 3982. PPM
INLET NO CONCENTRATION = 150. PPM
INLET O2 VOLUME FRACTION = 0.0460
INLET H2O VOLUME FRACTION = 0.1300
OUTLET SO2 CONCENTRATION = 1078. PPM

TEMPERATURE = 250.0 DEG. F

STAGE	SO2 CONCENTRATION PPM	ACID LOADING LBS ACID/LB CARBON
1	3982.	0.1883
2	3762.	0.1701
3	3527.	0.1507
4	3277.	0.1300
5	3012.	0.1082
6	2735.	0.0853
7	2447.	0.0614
8	2150.	0.0369
9	1848.	0.0119
10	1544.	0.0
11	1254.	0.0
0.65	1078.0002	0.0

TOTAL CARBON REQUIRED = 28.55 INCHES
TOTAL STAGES REQUIRED ASSUMING 2.45 INCHES CARBON/STAGE =11.65

SPACE VELOCITY = 2065. 1/HR

PRESSURE DROP ACROSS CARBON = 14.27 INCHES H2O
PRESSURE DROP ACROSS PLATES = 7.14 INCHES H2O
TOTAL PRESSURE DROP ACROSS STAGES = 21.41 INCHES H2O

RATE EXPRESSION USED IN DESIGN CALCULATIONS

```
RATEC(I)=COEFF * (1-X(I)/XS)**A * (YSO2**B) * (YO2**C) * (YH2O**D)
   WHERE COEFF=K * EXP(-E/R*(1/(T+460)))
```

T=	250.	XS=	0.38	YSO2=		YO2=	0.046	YH2O=	0.130
-E/R=	5520.	A=	1.000	B=	0.400	C=	0.630	D=	0.730
K=0.000159									

SO2 SORBER DESIGN

RUN NUMBER SA-25 DATE 6 17 71

TOTAL CARBON RATE = 3.270 LBS/HR
OUTLET CARBON LOADING = 0.12817 LBS ACID/LB CARBON
HEIGHT OF CARBON/STAGE = 2.35 INCHES
DIAMETER OF VESSEL = 6.0 INCHES
CARBON USED = 96324.
TOTAL GAS FLOW RATE = 1094. SCFH
INLET SO2 CONCENTRATION = 2028. PPM
INLET NO CONCENTRATION = 150. PPM
INLET O2 VOLUME FRACTION = 0.0410
INLET H2O VOLUME FRACTION = 0.1300
OUTLET SO2 CONCENTRATION = 411. PPM

TEMPERATURE = 250.0 DEG. F

STAGE	SO2 CONCENTRATION PPM	ACID LOADING LBS ACID/LB CARBON
1	2028.	0.1282
2	1855.	0.1124
3	1679.	0.0962
4	1500.	0.0798
5	1319.	0.0632
6	1138.	0.0467
7	960.	0.0304
8	786.	0.0145
9	619.	0.0
10	463.	0.0
0.37	411.0000	0.0

TOTAL CARBON REQUIRED = 24.36 INCHES
TOTAL STAGES REQUIRED ASSUMING 2.35 INCHES CARBON/STAGE =10.37

SPACE VELOCITY = 2746. 1/HR

PRESSURE DROP ACROSS CARBON = 12.18 INCHES H2O
PRESSURE DROP ACROSS PLATES = 6.09 INCHES H2O
TOTAL PRESSURE DROP ACROSS STAGES = 18.27 INCHES H2O

RATE EXPRESSION USED IN DESIGN CALCULATIONS

```
RATEC(I)=COEFF * (1-X(I)/XS)**A * (YSO2**B) * (YO2**C) * (YH2O**D)
   WHERE COEFF=K * EXP(-E/R*(1/(T+460)))
```

T= 250. XS= 0.38 YSO2= YO2= 0.041 YH2O= 0.130
-E/R= 5520. A= 1.000 B= 0.400 C= 0.630 D= 0.730
K=0.000159

SO2 SORBER DESIGN

RUN NUMBER SA-26 DATE 6 18 71

TOTAL CARBON RATE = 3.400 LBS/HR
OUTLET CARBON LOADING = 0.18528 LBS ACID/LB CARBON
HEIGHT OF CARBON/STAGE = 2.30 INCHES
DIAMETER OF VESSEL = 6.0 INCHES
CARBON USED = 96324.
TOTAL GAS FLOW RATE = 1186. SCFH
INLET SO2 CONCENTRATION = 2055. PPM
INLET NO CONCENTRATION = 150. PPM
INLET O2 VOLUME FRACTION = 0.0430
INLET H2O VOLUME FRACTION = 0.1300
OUTLET SO2 CONCENTRATION = 46. PPM

TEMPERATURE = 200.0 DEG. F

STAGE	SO2 CONCENTRATION PPM	ACID LOADING LBS ACID/LB CARBON
1	2055.	0.1853
2	1831.	0.1639
3	1595.	0.1414
4	1350.	0.1180
5	1100.	0.0941
6	851.	0.0704
7	611.	0.0475
8	390.	0.0264
9	200.	0.0083
10	60.	0.0
0.14	46.0000	0.0

TOTAL CARBON REQUIRED = 23.31 INCHES
TOTAL STAGES REQUIRED ASSUMING 2.30 INCHES CARBON/STAGE =10.14

SPACE VELOCITY = 3110. 1/HR

PRESSURE DROP ACROSS CARBON = 11.66 INCHES H2O
PRESSURE DROP ACROSS PLATES = 5.83 INCHES H2O
TOTAL PRESSURE DROP ACROSS STAGES = 17.48 INCHES H2O

RATE EXPRESSION USED IN DESIGN CALCULATIONS

RATEC(I)=COEFF * (1-X(I)/XS)**A * (YSO2**B) * (YO2**C) * (YH2O**D)
WHERE COEFF=K * EXP(-E/R*(1/(T+460)))

T=	200.	XS=	0.38	YSO2=		YO2=	0.043	YH2O=	0.130
-E/R=	5520.	A=	1.000	B=	0.400	C=	0.630	D=	0.730

K=0.000159

APPENDIX A-8-2

WESTVACO MODEL BY MULTIPLE REGRESSION
COMPARED TO CONTINUOUS SO_2 SORBER

Westvaco Model

$$\frac{dXv}{dt} = k\, e^{-E/RT} \left(1 - \frac{Xv}{0.38}\right) Y_{SO_2}^{n}\, Y_{O_2}^{m}\, Y_{H_2O}^{p}$$

where $-E/RT = 5416^{o}R$

$n = 0.48$

$m = 0.62$

$p = 0.73$

$k = 3.32(10^{-4})$ gms. H_2SO_4/gm. C-min.

SO2 SORBER DESIGN

RUN NUMBER SA-21 DATE 6 7 71

TOTAL CARBON RATE = 2.910 LBS/HR
OUTLET CARBON LOADING = 0.17885 LBS ACID/LB CARBON
HEIGHT OF CARBON/STAGE = 2.25 INCHES
DIAMETER OF VESSEL = 6.0 INCHES
CARBON USED = 96324.
TOTAL GAS FLOW RATE = 1247. SCFH
INLET SO2 CONCENTRATION = 2009. PPM
INLET NO CONCENTRATION = 150. PPM
INLET O2 VOLUME FRACTION = 0.0420
INLET H2O VOLUME FRACTION = 0.1300
OUTLET SO2 CONCENTRATION = 165. PPM

TEMPERATURE = 200.0 DEG. F

STAGE	SO2 CONCENTRATION PPM	ACID LOADING LBS ACID/LB CARBON
1	2009.	0.1788
2	1775.	0.1515
3	1526.	0.1223
4	1268.	0.0920
5	1006.	0.0613
6	750.	0.0314
7	512.	0.0034
8	304.	0.0
0.87	165.0001	0.0

TOTAL CARBON REQUIRED = 19.95 INCHES
TOTAL STAGES REQUIRED ASSUMING 2.25 INCHES CARBON/STAGE = 8.87

SPACE VELOCITY = 3820. 1/HR

PRESSURE DROP ACROSS CARBON = 9.97 INCHES H2O
PRESSURE DROP ACROSS PLATES = 4.99 INCHES H2O
TOTAL PRESSURE DROP ACROSS STAGES = 14.96 INCHES H2O

RATE EXPRESSION USED IN DESIGN CALCULATIONS

```
RATEC(I)=COEFF * (1-X(I)/XS)**A * (YSO2**B) * (YO2**C) * (YH2O**D)
   WHERE COEFF=K * EXP(-E/R*(1/(T+460)))
```

T=	200.	XS=	0.38	YO2=	0.042	YH2O=	0.130		
-E/R=	5416.	A=	1.000	B=	0.480	C=	0.620	D=	0.730
K=0.000332									

SO2 SORBER DESIGN

RUN NUMBER SA-22 DATE 6 15 71

TOTAL CARBON RATE = 3.260 LBS/HR
OUTLET CARBON LOADING = 0.22479 LBS ACID/LB CARBON
HEIGHT OF CARBON/STAGE = 2.35 INCHES
DIAMETER OF VESSEL = 6.0 INCHES
CARBON USED = 96324.
TOTAL GAS FLOW RATE = 1141. SCFH
INLET SO2 CONCENTRATION = 3946. PPM
INLET NO CONCENTRATION = 150. PPM
INLET O2 VOLUME FRACTION = 0.0420
INLET H2O VOLUME FRACTION = 0.1300
OUTLET SO2 CONCENTRATION = 1151. PPM

TEMPERATURE = 200.0 DEG. F

STAGE	SO2 CONCENTRATION PPM	ACID LOADING LBS ACID/LB CARBON
1	3946.	0.2248
2	3658.	0.1972
3	3333.	0.1661
4	2970.	0.1314
5	2574.	0.0935
6	2151.	0.0530
7	1714.	0.0111
8	1277.	0.0
0.31	1151.0005	0.0

TOTAL CARBON REQUIRED = 19.53 INCHES
TOTAL STAGES REQUIRED ASSUMING 2.35 INCHES CARBON/STAGE = 8.31

SPACE VELOCITY = 3570. 1/HR

PRESSURE DROP ACROSS CARBON = 9.76 INCHES H2O
PRESSURE DROP ACROSS PLATES = 4.88 INCHES H2O
TOTAL PRESSURE DROP ACROSS STAGES = 14.65 INCHES H2O

RATE EXPRESSION USED IN DESIGN CALCULATIONS

```
RATEC(I)=COEFF * (1-X(I)/XS)**A * (YSO2**B) * (YO2**C) * (YH2O**D)
   WHERE COEFF=K * EXP(-E/R*(1/(T+460)))
```

T=	200.	XS=	0.38	YO2=	0.042	YH2O=	0.130		
-E/R=	5416.	A=	1.000	B=	0.480	C=	0.620	D=	0.730
K=0.000332									

SO2 SORBER DESIGN

RUN NUMBER SA-23 DATE 6 16 71

TOTAL CARBON RATE = 3.350 LBS/HR
OUTLET CARBON LOADING = 0.16660 LBS ACID/LB CARBON
HEIGHT OF CARBON/STAGE = 2.40 INCHES
DIAMETER OF VESSEL = 6.0 INCHES
CARBON USED = 96324.
TOTAL GAS FLOW RATE = 1106. SCFH
INLET SO2 CONCENTRATION = 2009. PPM
INLET NO CONCENTRATION = 150. PPM
INLET O2 VOLUME FRACTION = 0.0420
INLET H2O VOLUME FRACTION = 0.1300
OUTLET SO2 CONCENTRATION = 91. PPM

TEMPERATURE = 200.0 DEG. F

STAGE	SO2 CONCENTRATION PPM	ACID LOADING LBS ACID/LB CARBON
1	2009.	0.1666
2	1713.	0.1399
3	1407.	0.1123
4	1101.	0.0846
5	804.	0.0579
6	532.	0.0333
7	300.	0.0123
8	124.	0.0
0.25	91.0000	0.0

TOTAL CARBON REQUIRED = 19.70 INCHES
TOTAL STAGES REQUIRED ASSUMING 2.40 INCHES CARBON/STAGE = 8.25

SPACE VELOCITY = 3414. 1/HR

PRESSURE DROP ACROSS CARBON = 9.90 INCHES H2O
PRESSURE DROP ACROSS PLATES = 4.95 INCHES H2O
TOTAL PRESSURE DROP ACROSS STAGES = 14.85 INCHES H2O

RATE EXPRESSION USED IN DESIGN CALCULATIONS

```
RATEC(I)=COEFF * (1-X(I)/XS)**A * (YSO2**B) * (YO2**C) * (YH2O**D)
   WHERE COEFF=K * EXP(-E/R*(1/(T+460)))
```

T=	200.	XS=	0.38	YO2=	0.042	YH2O=	0.130		
-E/R=	5416.	A=	1.000	B=	0.480	C=	0.620	D=	0.730
K=0.000332									

SO2 SORBER DESIGN

RUN NUMBER SA-24 DATE 6 16 71

TOTAL CARBON RATE = 3.190 LBS/HR
OUTLET CARBON LOADING = 0.18834 LBS ACID/LB CARBON
HEIGHT OF CARBON/STAGE = 2.45 INCHES
DIAMETER OF VESSEL = 6.0 INCHES
CARBON USED = 96324.
TOTAL GAS FLOW RATE = 965. SCFH
INLET SO2 CONCENTRATION = 3982. PPM
INLET NO CONCENTRATION = 150. PPM
INLET O2 VOLUME FRACTION = 0.0460
INLET H2O VOLUME FRACTION = 0.1300
OUTLET SO2 CONCENTRATION - 1078. PPM

TEMPERATURE = 250.0 DEG. F

STAGE	SO2 CONCENTRATION PPM	ACID LOADING LBS ACID/LB CARBON
1	3982.	0.1883
2	3720.	0.1667
3	3439.	0.1434
4	3139.	0.1186
5	2823.	0.0925
6	2495.	0.0654
7	2157.	0.0375
8	1817.	0.0093
9	1480.	0.0
10	1170.	0.0
0.32	1078.0002	0.0

TOTAL CARBON REQUIRED = 25.28 INCHES
TOTAL STAGES REQUIRED ASSUMING 2.45 INCHES CARBON/STAGE =10.32

SPACE VELOCITY = 2332. 1/HR

PRESSURE DROP ACROSS CARBON = 12.64 INCHES H2O
PRESSURE DROP ACROSS PLATES = 6.32 INCHES H2O
TOTAL PRESSURE DROP ACROSS STAGES = 18.96 INCHES H2O

RATE EXPRESSION USED IN DESIGN CALCULATIONS

```
RATEC(I)=COEFF * (1-X(I)/XS)**A * (YSO2**B) * (YO2**C) * (YH2O**D)
    WHERE COEFF=K * EXP(-E/R*(1/(T+460)))
```

T= 250. XS= 0.38 YO2= 0.046 YH2O= 0.130
-E/R= 5416. A= 1.000 B= 0.480 C= 0.620 D= 0.730
K=0.000332

SO2 SORBER DESIGN

RUN NUMBER SA-25 DATE 6 17 71

TOTAL CARBON RATE = 3.270 LBS/HR
OUTLET CARBON LOADING = 0.12817 LBS ACID/LB CARBON
HEIGHT OF CARBON/STAGE = 2.35 INCHES
DIAMETER OF VESSEL = 6.0 INCHES
CARBON USED = 96324.
TOTAL GAS FLOW RATE = 1094. SCFH
INLET SO2 CONCENTRATION = 2028. PPM
INLET NO CONCENTRATION = 150. PPM
INLET O2 VOLUME FRACTION = 0.0410
INLET H2O VOLUME FRACTION = 0.1300
OUTLET SO2 CONCENTRATION = 411. PPM

TEMPERATURE = 250.0 DEG. F

STAGE	SO2 CONCENTRATION PPM	ACID LOADING LBS ACID/LB CARBON
1	2028.	0.1282
2	1834.	0.1104
3	1636.	0.0923
4	1437.	0.0741
5	1239.	0.0559
6	1045.	0.0382
7	857.	0.0210
8	679.	0.0047
9	515.	0.0
0.70	411.0000	0.0

TOTAL CARBON REQUIRED = 22.80 INCHES
TOTAL STAGES REQUIRED ASSUMING 2.35 INCHES CARBON/STAGE = 9.70

SPACE VELOCITY = 2934. 1/HR

PRESSURE DROP ACROSS CARBON = 11.40 INCHES H2O
PRESSURE DROP ACROSS PLATES = 5.70 INCHES H2O
TOTAL PRESSURE DROP ACROSS STAGES = 17.10 INCHES H2O

RATE EXPRESSION USED IN DESIGN CALCULATIONS

RATEC(I)=COEFF * (1-X(I)/XS)**A * (YSO2**B) * (YO2**C) * (YH2O**D)
WHERE COEFF=K * EXP(-E/R*(1/(T+460)))

T= 250. XS= 0.38 YO2= 0.041 YH2O= 0.130
-E/R= 5416. A= 1.000 B= 0.480 C= 0.620 D= 0.730
K=0.000332

SO2 SORBER DESIGN

RUN NUMBER SA-26 DATE 6 18 71

TOTAL CARBON RATE = 3.400 LBS/HR
OUTLET CARBON LOADING = 0.18528 LBS ACID/LB CARBON
HEIGHT OF CARBON/STAGE = 2.30 INCHES
DIAMETER OF VESSEL = 6.0 INCHES
CARBON USED - 963246
TOTAL GAS FLOW RATE = 1186. SCFH
INLET SO2 CONCENTRATION = 2055. PPM
INLET NO CONCENTRATION = 150. PPM
INLET O2 VOLUME FRACTION = 0.0430
INLET H2O VOLUME FRACTION = 0.1300
OUTLET SO2 CONCENTRATION = 46. PPM

TEMPERATURE = 200.0 DEG. F

STAGE	SO2 CONCENTRATION PPM	ACID LOADING LBS ACID/LB CARBON
1	2055.	0.1853
2	1806.	0.1615
3	1545.	0.1366
4	1277.	0.1111
5	1010.	0.0856
6	752.	0.0609
7	514.	0.0382
8	308.	0.0185
9	145.	0.0030
0.90	46.0000	0.0

TOTAL CARBON REQUIRED = 22.77 INCHES
TOTAL STAGES REQUIRED ASSUMING 2.30 INCHES CARBON/STAGE = 9.90

SPACE VELOCITY = 3185. 1/HR

PRESSURE DROP ACROSS CARBON = 11.38 INCHES H2O
PRESSURE DROP ACROSS PLATES = 5.69 INCHES H2O
TOTAL PRESSURE DROP ACROSS STAGES = 17.08 INCHES H2O

RATE EXPRESSION USED IN DESIGN CALCULATIONS

```
RATEC(I)=COEFF * (1-X(I)/XS)**A * (YSO2**B) * (YO2**C) * (YH2O**D)
   WHERE COEFF=K * EXP(-E/R*(1/(T+460)))
```

T=	200.	XS=	0.38	YO2=	0.043	YH2O=	0.130
-E/R=	5416.	A=	1.000	B=	0.480	C=	0.620	D=	0.730
K=0.000332							

APPENDIX A-8-3

WESTVACO MODEL BY MULTIPLE REGRESSION (LOADING FACTOR ORDER) COMPARED TO CONTINUOUS SO_2 SORBER

Westvaco Model

$$\frac{dXv}{dt} = k\, e^{-E/RT} \left(1 - \frac{Xv}{0.38}\right)^A Y_{SO_2}^n\, Y_{O_2}^m\, Y_{H_2O}^p$$

where $-E/RT = 5732^oR$

$A = 1.83$

$n = 0.53$

$m = 0.62$

$p = 0.73$

$k = 3.42(10^{-4})$ gms. H_2SO_4/gm. C-min.

SO2 SORBER DESIGN

RUN NUMBER SA-21 DATE 6 7 71

TOTAL CARBON RATE - 2.910 LBS/HR
OUTLET CARBON LOADING = 0.17885 LBS ACID/LB CARBON
HEIGHT OF CARBON/STAGE = 2.25 INCHES
DIAMETER OF VESSEL = 6.0 INCHES
CARBON USED = 96324.
TOTAL GAS FLOW RATE = 1247. SCFH
INLET SO2 CONCENTRATION = 2009. PPM
INLET NO CONCENTRATION = 150. PPM
INLET O2 VOLUME FRACTION = 0.0420
INLET H2O VOLUME FRACTION = 0.1300
OUTLET SO2 CONCENTRATION = 165. PPM

TEMPERATURE = 200.0 DEG. F

STAGE	SO2 CONCENTRATION PPM	ACID LOADING LBS ACID/LB CARBON
1	2009.	0.1788
2	1840.	0.1590
3	1649.	0.1367
4	1436.	0.1117
5	1202.	0.0843
6	951.	0.0549
7	692.	0.0246
8	443.	0.0
9	231.	0.0
0.41	165.0001	0.0

TOTAL CARBON REQUIRED = 21.17 INCHES
TOTAL STAGES REQUIRED ASSUMING 2.25 INCHES CARBON/STAGE = 9.41

SPACE VELOCITY = 3600. 1/HR

PRESSURE DROP ACROSS CARBON = 10.56 INCHES H2O
PRESSURE DROP ACROSS PLATES = 5.29 INCHES H2O
TOTAL PRESSURE DROP ACROSS STAGES = 15.87 INCHES H2O

RATE EXPRESSION USED IN DESIGN CALCULATIONS

RATEC(I)=COEFF * (1-X(I)/XS)**A * (YSO2**B) * (YO2**C) * (YH2O**D)
WHERE COEFF=K * EXP(-E/R*(1/(T+460)))

T= 200. XS= 0.38 YO2= 0.042 YH2O= 0.130
-E/R= 5732. A= 1.830 B= 0.530 C= 0.620 D= 0.730
K=0.000342

SO2 SORBER DESIGN

RUN NUMBER SA-22 DATE 6 15 71

TOTAL CARBON RATE = 3.260 LBS/HR
OUTLET CARBON LOADING = 0.22479 LBS ACID/LB CARBON
HEIGHT OF CARBON/STAGE = 2.35 INCHES
DIAMETER OF VESSEL = 6.0 INCHES
CARBON USED = 96324.
TOTAL GAS FLOW RATE = 1141. SCFH
INLET SO2 CONCENTRATION = 3946. PPM
INLET NO CONCENTRATION = 150. PPM
INLET O2 VOLUME FRACTION = 0.0420
INLET H2O VOLUME FRACTION = 0.1300
OUTLET SO2 CONCENTRATION = 1151. PPM

TEMPERATURE = 200.0 DEG. F

STAGE	SO2 CONCENTRATION PPM	ACID LOADING LBS ACID/LB CARBON
1	3946.	0.2248
2	3772.	0.2082
3	3569.	0.1887
4	3329.	0.1657
5	3045.	0.1386
6	2712.	0.1067
7	2322.	0.0694
8	1875.	0.0266
9	1381.	0.0
0.46	1151.0005	0.0

TOTAL CARBON REQUIRED = 22.24 INCHES
TOTAL STAGES REQUIRED ASSUMING 2.35 INCHES CARBON/STAGE = 9.46

SPACE VELOCITY = 3135. 1/HR

PRESSURE DROP ACROSS CARBON = 11.12 INCHES H2O
PRESSURE DROP ACROSS PLATES = 5.56 INCHES H2O
TOTAL PRESSURE DROP ACROSS STAGES = 16.68 INCHES H2O

RATE EXPRESSION USED IN DESIGN CALCULATIONS

RATEC(I)=COEFF * (1-X(I)/XS)**A * (YSO2**B) * (YO2**C) * (YH2O**D)
WHERE COEFF=K * EXP(-E/R*(1/(T+460)))

T= 200. XS= 0.38 YO2= 0.042 YH2O= 0.130
-E/R= 5732. A= 1.830 B= 0.530 C= 0.620 D= 0.730
K=0.000342

SO2 SORBER DESIGN

RUN NUMBER SA-23 DATE 6 16 71

TOTAL CARBON RATE = 3.350 LBS/HR
OUTLET CARBON LOADING = 0.16660 LBS ACID/LB CARBON
HEIGHT OF CARBON/STAGE = 2.40 INCHES
DIAMETER OF VESSEL = 6.0 INCHES
CARBON USED = 96324.
TOTAL GAS FLOW RATE = 1106. SCFH
INLET SO2 CONCENTRATION = 2009. PPM
INLET NO CONCENTRATION = 150. PPM
INLET O2 VOLUME FRACTION = 0.0420
INLET H2O VOLUME FRACTION = 0.1300
OUTLET SO2 CONCENTRATION = 91. PPM

TEMPERATURE = 200.0 DEG. F

STAGE	SO2 CONCENTRATION PPM	ACID LOADING LBS ACID/LB CARBON
1	2009.	0.1666
2	1784.	0.1463
3	1537.	0.1240
4	1270.	0.0999
5	989.	0.0745
6	707.	0.0491
7	442.	0.0252
8	220.	0.0051
0.79	91.0000	0.0

TOTAL CARBON REQUIRED = 21.09 INCHES
TOTAL STAGES REQUIRED ASSUMING 2.40 INCHES CARBON/STAGE = 8.79

SPACE VELOCITY = 3204. 1/HR

PRESSURE DROP ACROSS CARBON = 10.54 INCHES H2O
PRESSURE DROP ACROSS PLATES = 5.27 INCHES H2O
TOTAL PRESSURE DROP ACROSS STAGES = 15.82 INCHES H2O

RATE EXPRESSION USED IN DESIGN CALCULATIONS

```
RATEC(I)=COEFF * (1-X(I)/XS)**A * (YSO2**B) * (YO2**C) * (YH2O**D)
   WHERE COEFF=K * EXP(-E/R*(1/(T+460)))
```

T=	200.	XS=	0.38	YO2=	0.042	YH2O=	0.130		
-E/R=	5732.	A=	1.830	B=	0.530	C=	0.620	D=	0.730
K=0.000342									

SO2 SORBER DESIGN

RUN NUMBER SA-24 DATE 6 16 71

TOTAL CARBON RATE = 3.190 LBS/HR
OUTLET CARBON LOADING = 0.18834 LBS ACID/LB CARBON
HEIGHT OF CARBON/STAGE = 2.45 INCHES
DIAMETER OF VESSEL = 6.0 INCHES
CARBON USED = 96324.
TOTAL GAS FLOW RATE = 965. SCFH
INLET SO2 CONCENTRATION = 3982. PPM
INLET NO CONCENTRATION = 150. PPM
INLET O2 VOLUME FRACTION = 0.0460
INLET H2O VOLUME FRACTION = 0.1300
OUTLET SO2 CONCENTRATION = 1078. PPM

TEMPERATURE = 250.0 DEG. F

STAGE	SO2 CONCENTRATION PPM	ACID LOADING LBS ACID/LB CARBON
1	3982.	0.1883
2	3800.	0.1733
3	3597.	0.1565
4	3371.	0.1378
5	3117.	0.1168
6	2836.	0.0936
7	2525.	0.0679
8	2185.	0.0398
9	1821.	0.0096
10	1439.	0.0
11	1090.	0.0
0.04	1078.0002	0.0

TOTAL CARBON REQUIRED = 27.04 INCHES
TOTAL STAGES REQUIRED ASSUMING 2.45 INCHES CARBON/STAGE =11.04

SPACE VELOCITY = 2180. 1/HR

PRESSURE DROP ACROSS CARBON = 13.52 INCHES H2O
PRESSURE DROP ACROSS PLATES = 6.76 INCHES H2O
TOTAL PRESSURE DROP ACROSS STAGES = 20.28 INCHES H2O

RATE EXPRESSION USED IN DESIGN CALCULATIONS

```
RATE(I)=COEFF * (1-X(I)/XS)**A * (YSO2**B) * (YO2**C) * (YH2O**D)
   WHERE COEFF=K * EXP(-E/R*(1/(T+460)))
```

T=	250.	XS=	0.38	YO2=	0.046	YH2O=	0.130		
-E/R=	5732.	A=	1.830	B=	0.530	C=	0.620	D=	0.730
K=0.000342									

SO2 SORBER DESIGN

RUN NUMBER SA-25 DATE 6 17 71

TOTAL CARBON RATE = 3.270 LBS/HR
OUTLET CARBON LOADING = 0.12817 LBS ACID/LB CARBON
HEIGHT OF CARBON/STAGE = 2.35 INCHES
DIAMETER OF VESSEL = 6.0 INCHES
CARBON USED = 96324.
TOTAL GAS FLOW RATE = 1094. SCFH
INLET SO2 CONCENTRATION = 2028. PPM
INLET NO CONCENTRATION = 150. PPM
INLET O2 VOLUME FRACTION = 0.0410
INLET H2O VOLUME FRACTION = 0.1300
OUTLET SO2 CONCENTRATION = 411. PPM

TEMPERATURE = 250.0 DEG. F

STAGE	SO2 CONCENTRATION PPM	ACID LOADING LBS ACID/LB CARBON
1	2028.	0.1282
2	1865.	0.1132
3	1692.	0.0974
4	1510.	0.0808
5	1321.	0.0635
6	1127.	0.0457
7	932.	0.0278
8	740.	0.0102
9	556.	0.0
0.88	411.0000	0.0

TOTAL CARBON REQUIRED = 23.22 INCHES
TOTAL STAGES REQUIRED ASSUMING 2.35 INCHES CARBON/STAGE = 9.88

SPACE VELOCITY = 2881. 1/HR

PRESSURE DROP ACROSS CARBON = 11.61 INCHES H2O
PRESSURE DROP ACROSS PLATES = 5.80 INCHES H2O
TOTAL PRESSURE DROP ACROSS STAGES = 17.41 INCHES H2O

RATE EXPRESSION USED IN DESIGN CALCULATIONS

RATEC(I)=COEFF * (1-X(I)/XS)**A * (YSO2**B) * (YO2**C) * (YH2O**D)
WHERE COEFF=K * EXP(-E/R*(1/(T+460)))

T= 250. XS= 0.38 YO2= 0.041 YH2O= 0.130
-E/R= 5732. A= 1.830 B= 0.530 C= 0.620 D= 0.730
K=0.000342

SO2 SORBER DESIGN

RUN NUMBER SA-26 DATE 6 18 71

TOTAL CARBON RATE = 3,400 LBS/HR
OUTLET CARBON LOADING = 0.18528 LBS ACID/LB CARBON
HEIGHT OF CARBON/STAGE = 2.30 INCHES
DIAMETER OF VESSEL = 6.0 INCHES
CARBON USED = 96324.
TOTAL GAS FLOW RATE = 1186. SCFH
INLET SO2 CONCENTRATION = 2055. PPM
INLET NO CONCENTRATION = 150. PPM
INLET O2 VOLUME FRACTION = 0.0430
INLET H2O VOLUME FRACTION = 0.1300
OUTLET SO2 CONCENTRATION = 46. PPM

TEMPERATURE = 200.0 DEG. F

STAGE	SO2 CONCENTRATION PPM	ACID LOADING LBS ACID/LB CARBON
1	2055.	0.1853
2	1879.	0.1685
3	1685.	0.1500
4	1473.	0.1298
5	1245.	0.1080
6	1004.	0.0850
7	759.	0.0616
8	522.	0.0390
9	309.	0.0186
10	140.	0.0025
0.83	46.0000	0.0

TOTAL CARBON REQUIRED = 24.92 INCHES
TOTAL STAGES REQUIRED ASSUMING 2.30 INCHES CARBON/STAGE =10.83

SPACE VELOCITY = 2910. 1/HR

PRESSURE DROP ACROSS CARBON = 12.46 INCHES H2O
PRESSURE DROP ACROSS PLATES = 6.23 INCHES H2O
TOTAL PRESSURE DROP ACROSS STAGES = 18.69 INCHES H2O

RATE EXPRESSION USED IN DESIGN CALCULATIONS

RATEC(I)=COEFF * (1-X(I)/XS)**A * (YSO2**B) * (YO2**C) * (YH2O**D)
WHERE COEFF=K * EXP(-E/R*(1/(T+460)))

I= 200. XS= 0.38 YO2= 0.043 YH2O= 0.130
-E/R= 5732. A= 1.830 B= 0.530 C= 0.620 D= 0.730
K=0.000342

APPENDIX A-9

SO_2 SORBER DESIGN - EFFECTS ON SIZE

Appendix A-9 includes the detailed results of the SO_2 sorber design study which encompassed the effects of the following parameters on reactor size:

1) Inlet SO_2 Conc. - 2,000 PPM
2) Inlet O_2 Conc. - 0.046 mole fraction
3) Inlet H_2O Conc. - 0.13 mole fraction
4) Outlet Acid Loading on C - 0.183 lb. acid/lb. C
5) Temperature - 200°F
6) Linear Gas Velocity - 4 ft./sec.
7) Carbon Bed Depth/Stage - 9 inches.

Each parameter was varied separately while holding all others constant at the base conditions given in parameters in the preceding list.

The results are summarized in Figures A-9-1 to A-9-10, in which the dependence of reactor size on each parameter is shown graphically. Figure A-9-1 shows the effect of inlet SO_2 concentration on carbon requirement for a SO_2 removal of 90%, while Figure A-9-2 presents the same effect but for a specific outlet SO_2 concentration of 50 ppm. All other cases are based on a SO_2 removal of 90%. Figures A-9-3 through A-9-6 show the effects of O_2 concentration, H_2O concentration, outlet acid loading, and temperature. Figure A-9-7 shows the effect of linear velocity at carbon bed depths of 4, 9, 18 and 32 inches. Figures A-9-8 through A-9-10 show the effect of carbon bed depth at linear velocities of 2, 3, and 4 ft./sec., respectively.

The raw results as obtained from the computer program are presented following the figures.

Figure A-9-1. Effect of inlet SO_2 concentration on carbon required to remove 90% of the SO_2

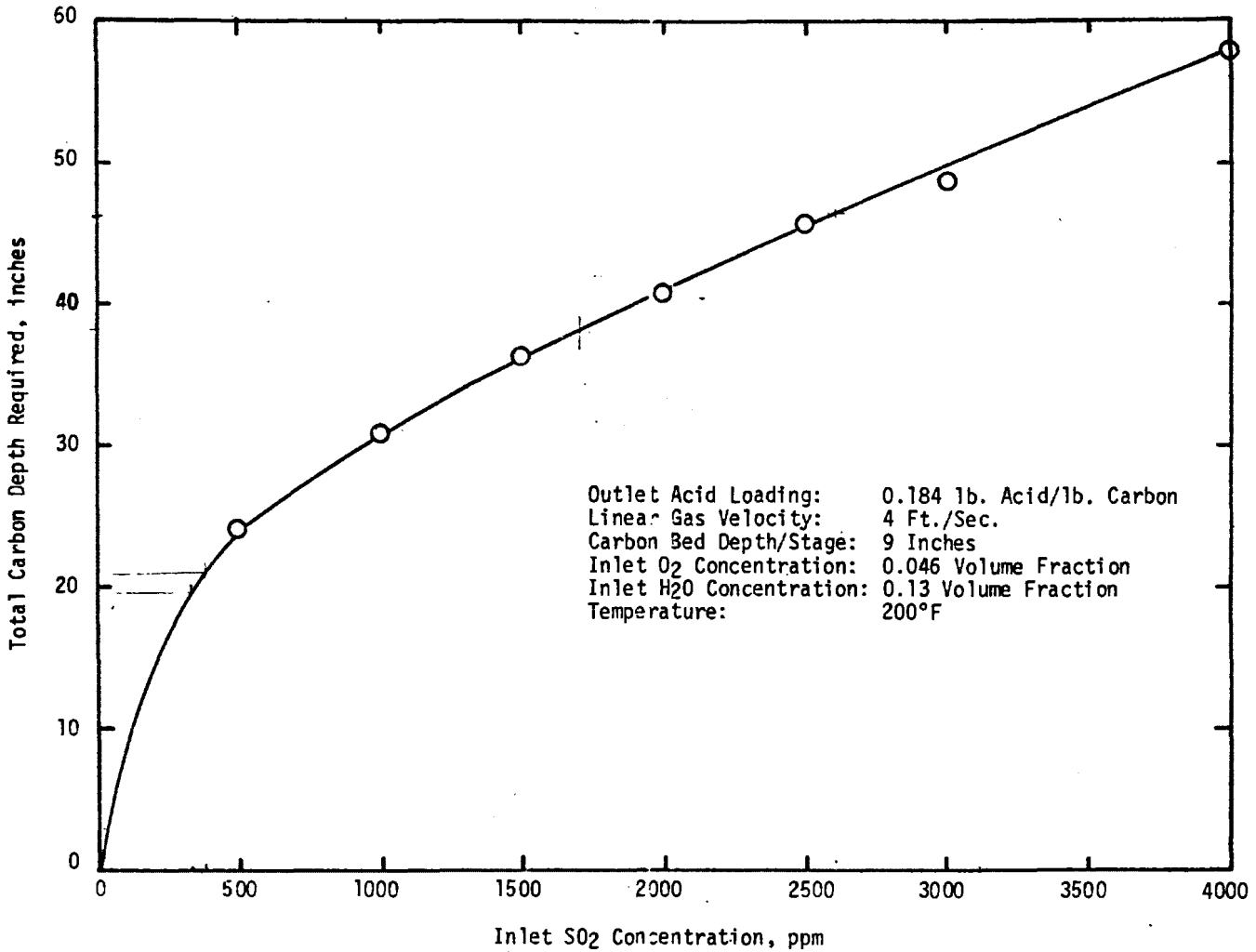

Figure A-9-2. Effect of inlet SO_2 concentration on carbon required to achieve an outlet SO_2 concentration of 50 ppm

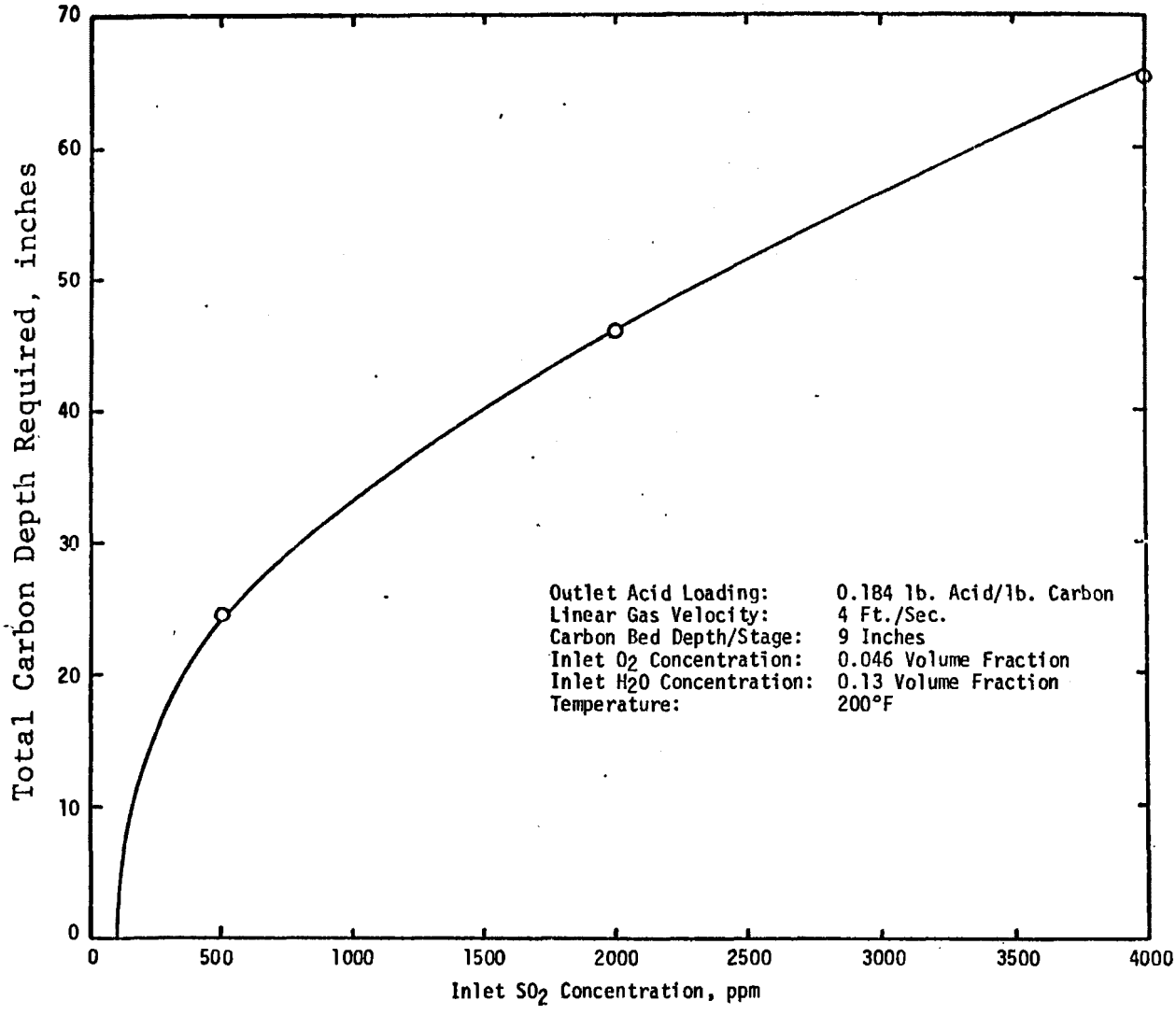

Figure A-9-3. Effect of inlet O_2 concentration on carbon required to remove 90% of an inlet SO_2 concentration of 2,000 ppm

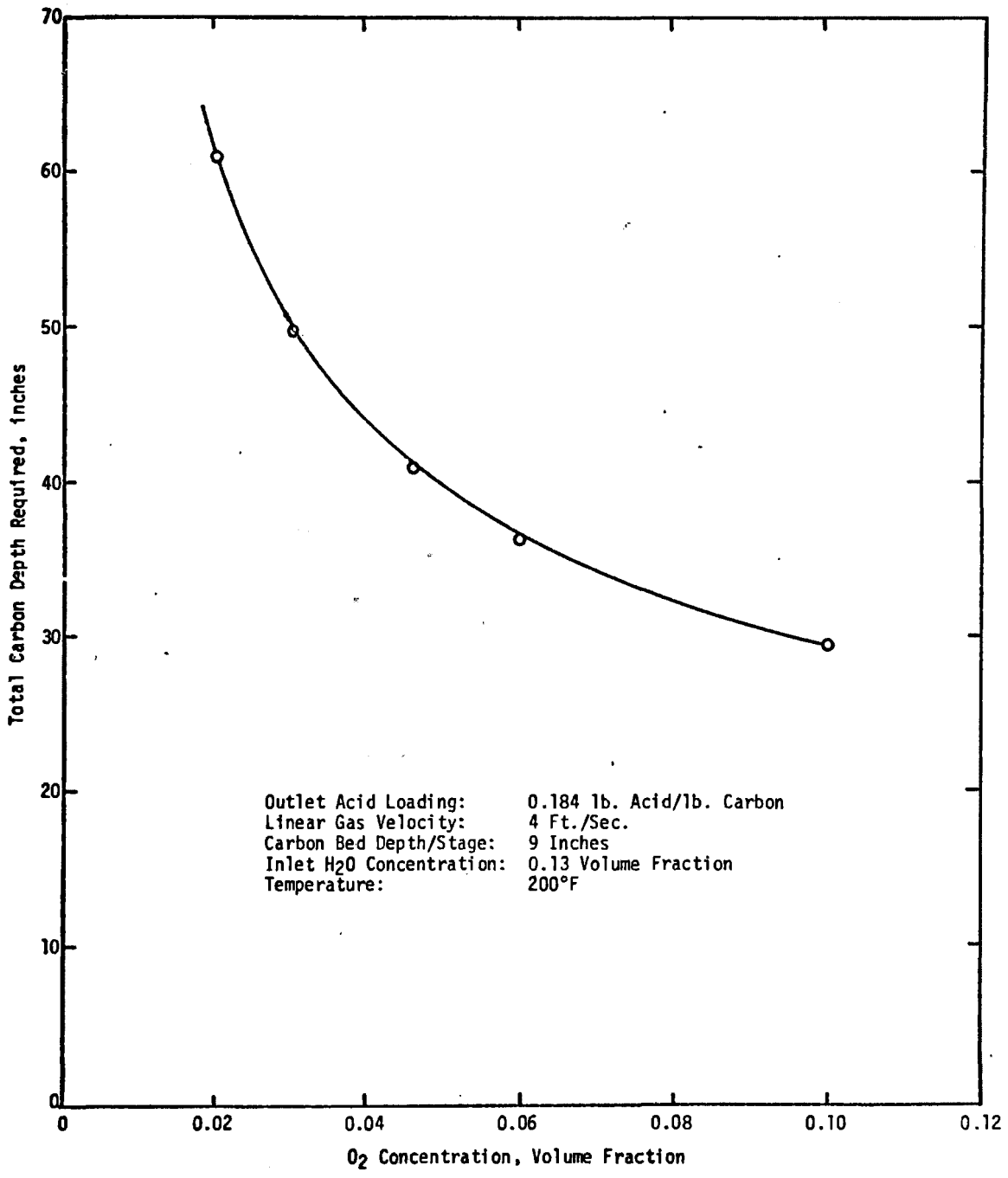

Figure A-9-4. Effect of inlet H_2O concentration on carbon required to remove 90% of an inlet SO_2 concentration of 2,000 ppm

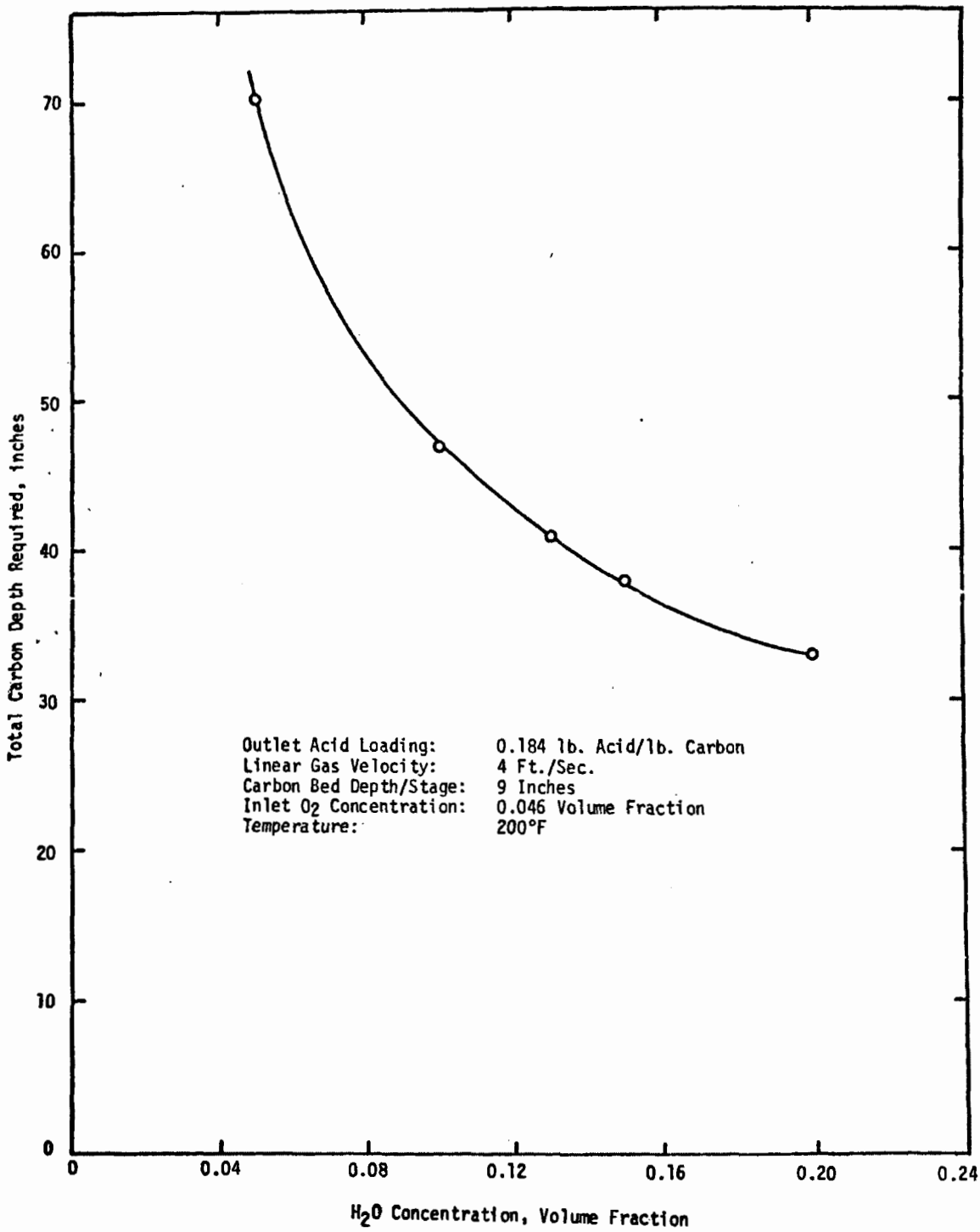

Figure A-9-5. Effect of outlet acid loading on carbon required to remove 90% of an inlet SO_2 concentration of 2,000 ppm

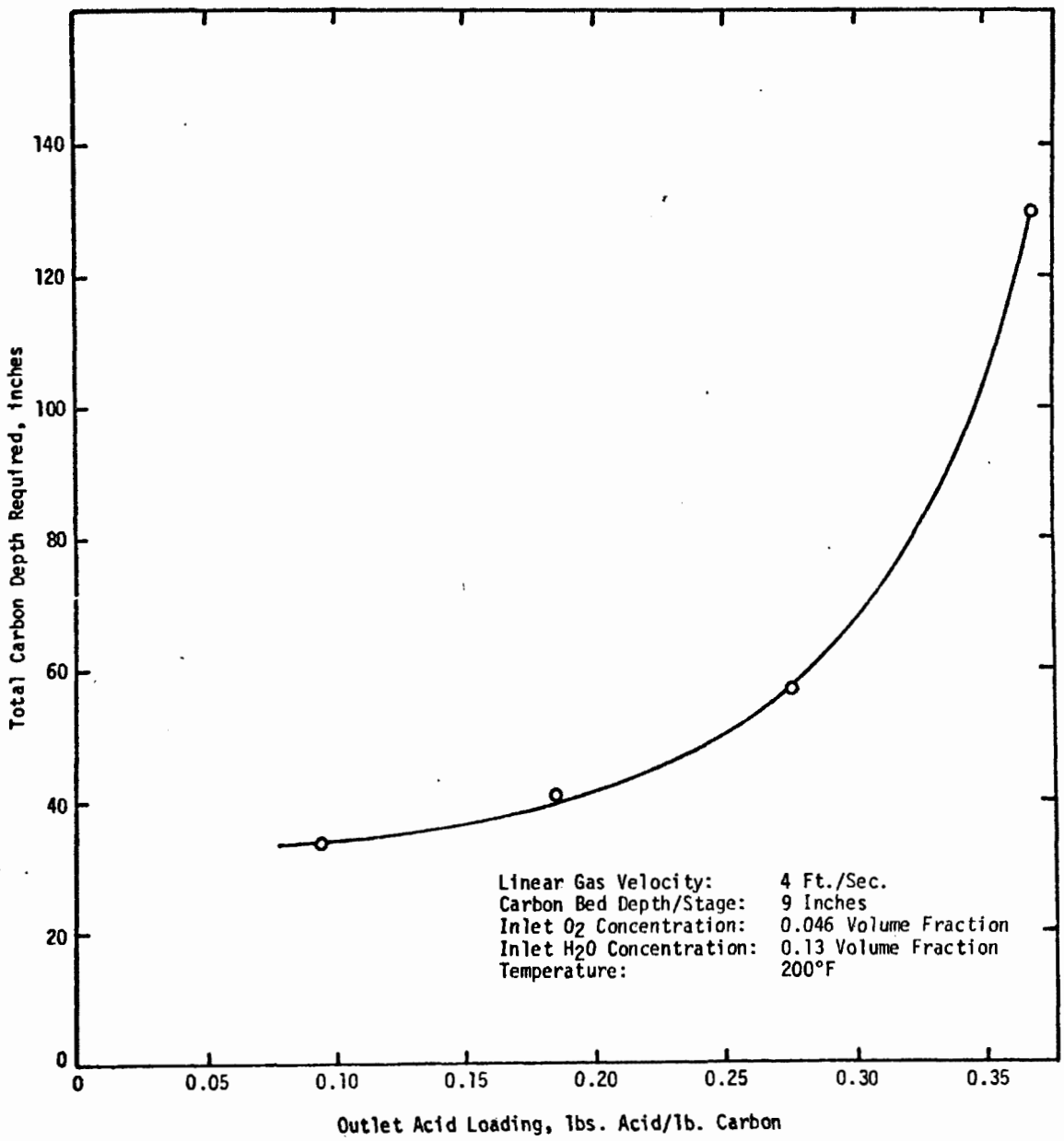

Figure A-9-6. Effect of temperature on carbon required to remove 90% of an inlet SO_2 concentration of 2,000 ppm

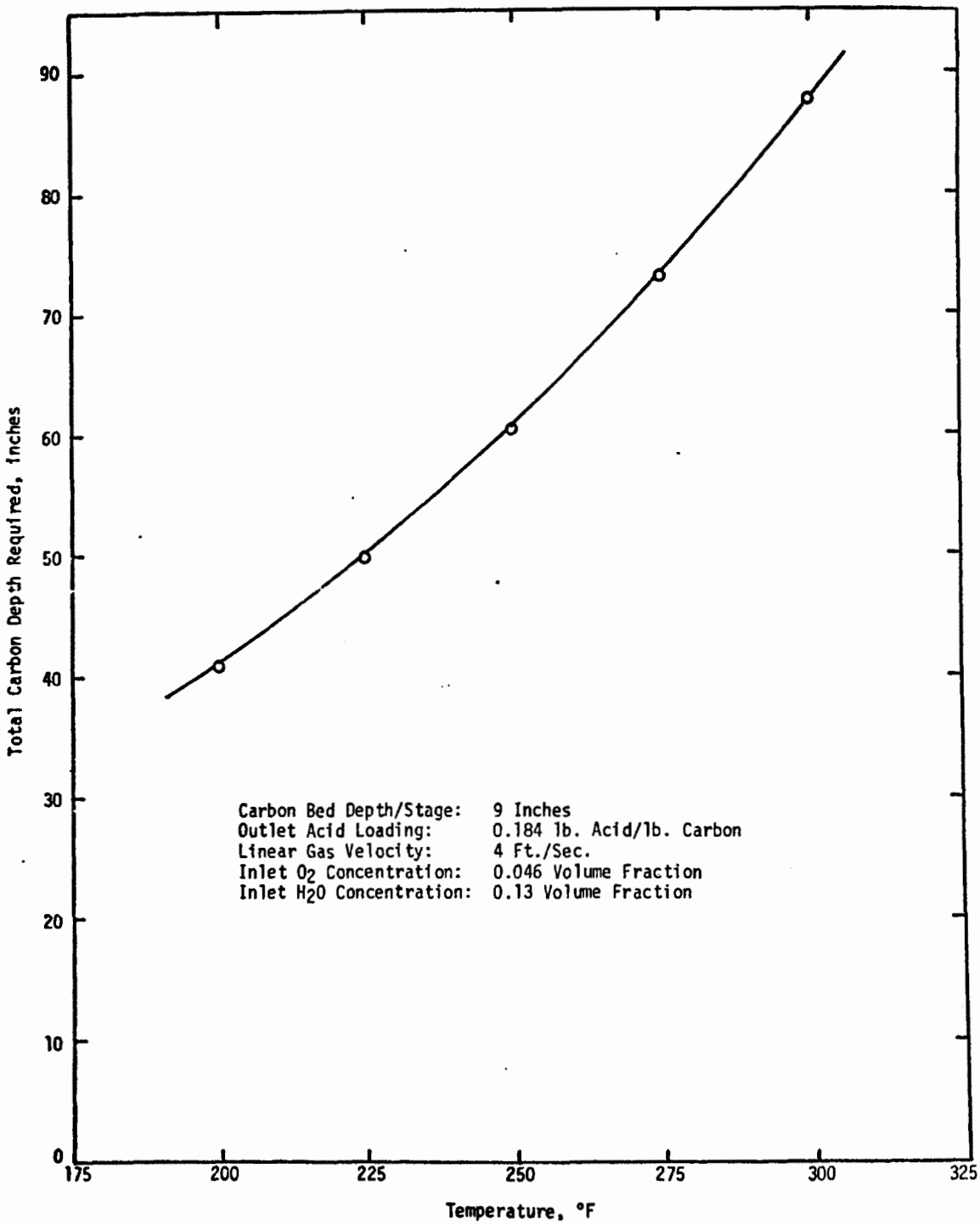

Figure A-9-7. Effect of linear gas velocity on carbon required to remove 90% of an inlet SO_2 concentration of 2,000 ppm at various carbon bed depths/stage

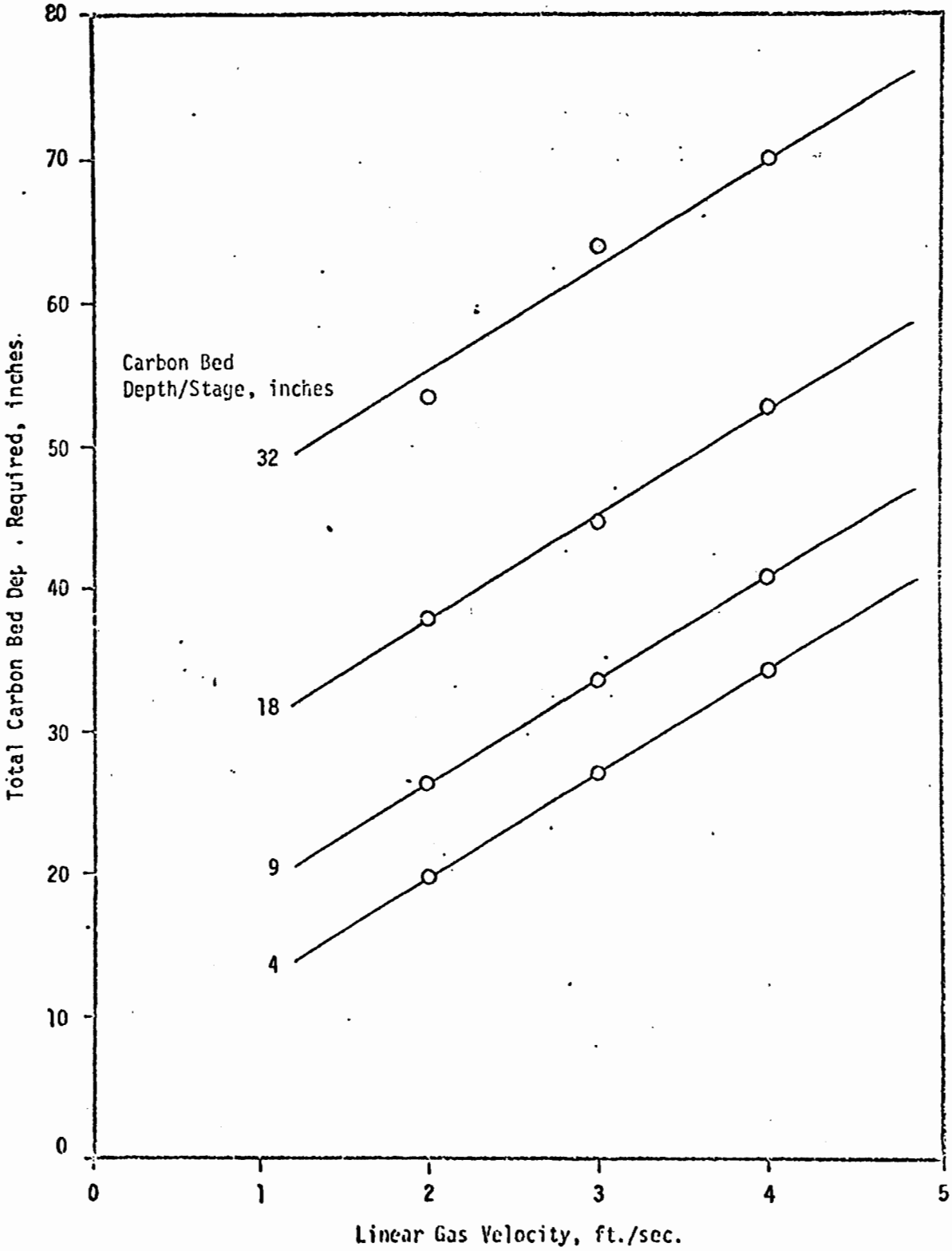

Figure A-9-8. Effect of bed depth on carbon required to remove 90% of an inlet SO_2 concentration of 2,000 ppm and the pressure drop across carbon + plates

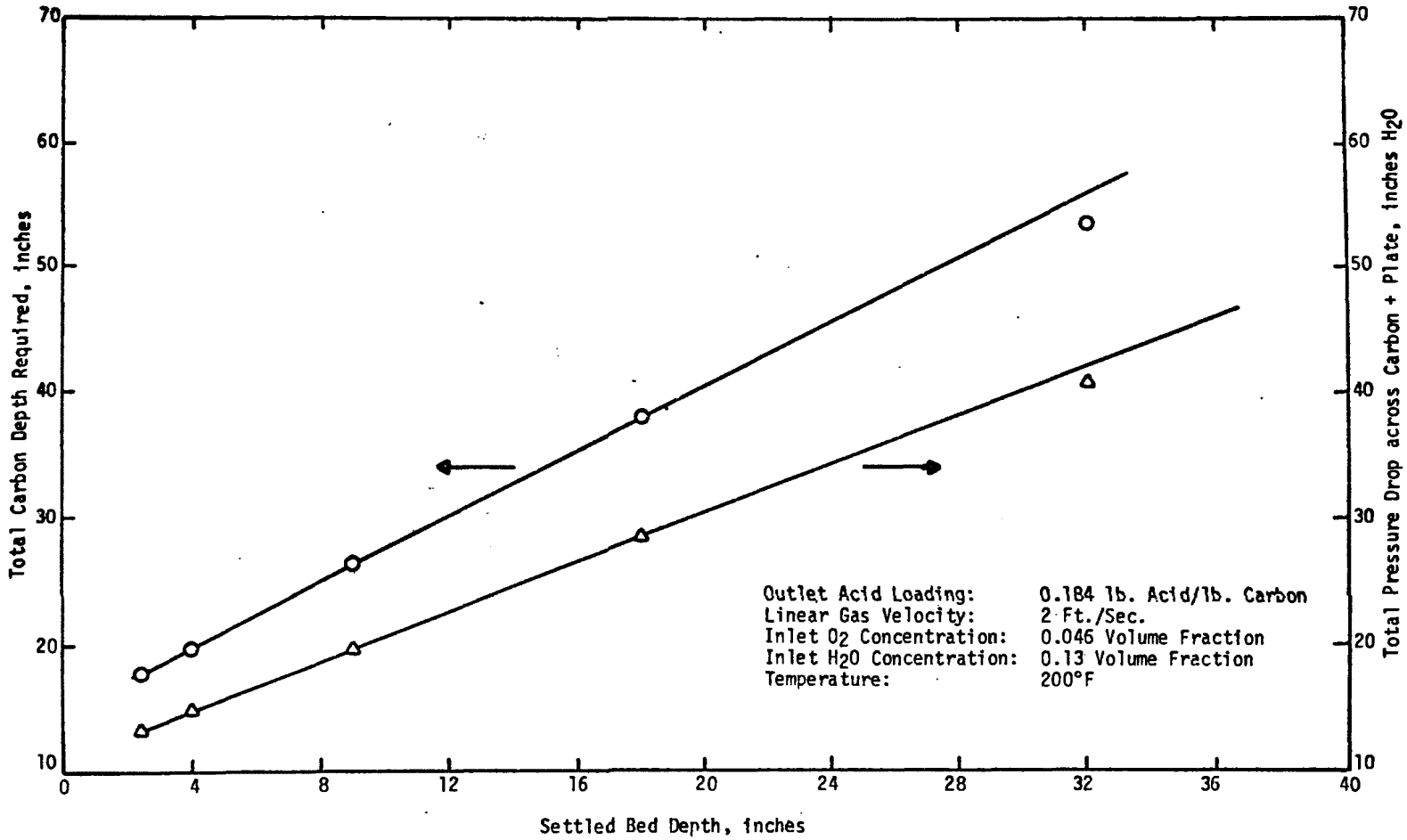

Figure A-9-9. Effect of bed depth on carbon required to remove 90% of an inlet SO_2 concentration of 2,000 ppm and the pressure drop across carbon + plates

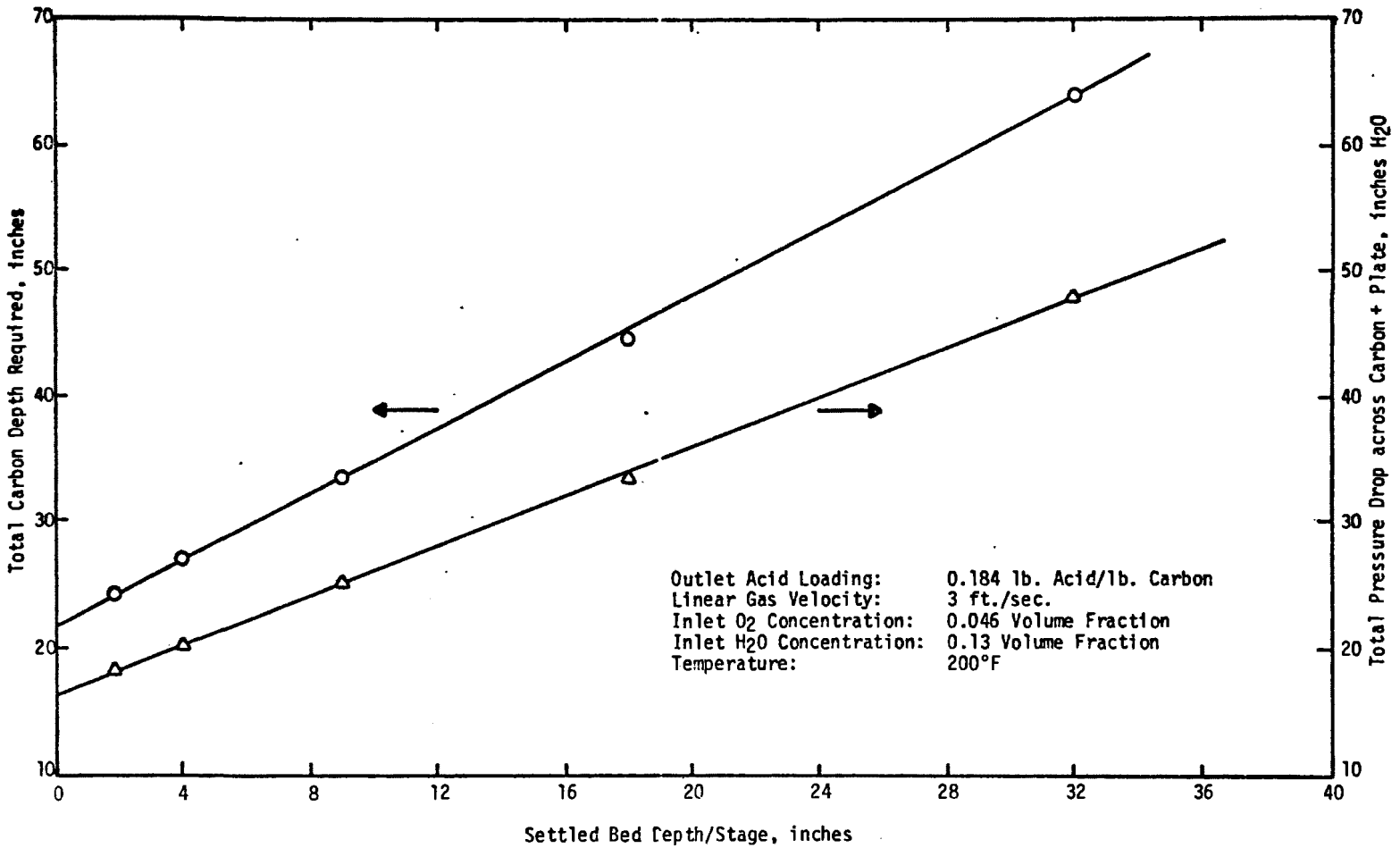

Figure A-9-10. Effect of bed depth on carbon required to remove 90% of an inlet SO_2 concentration of 2,000 ppm and the pressure drop across carbon + plates

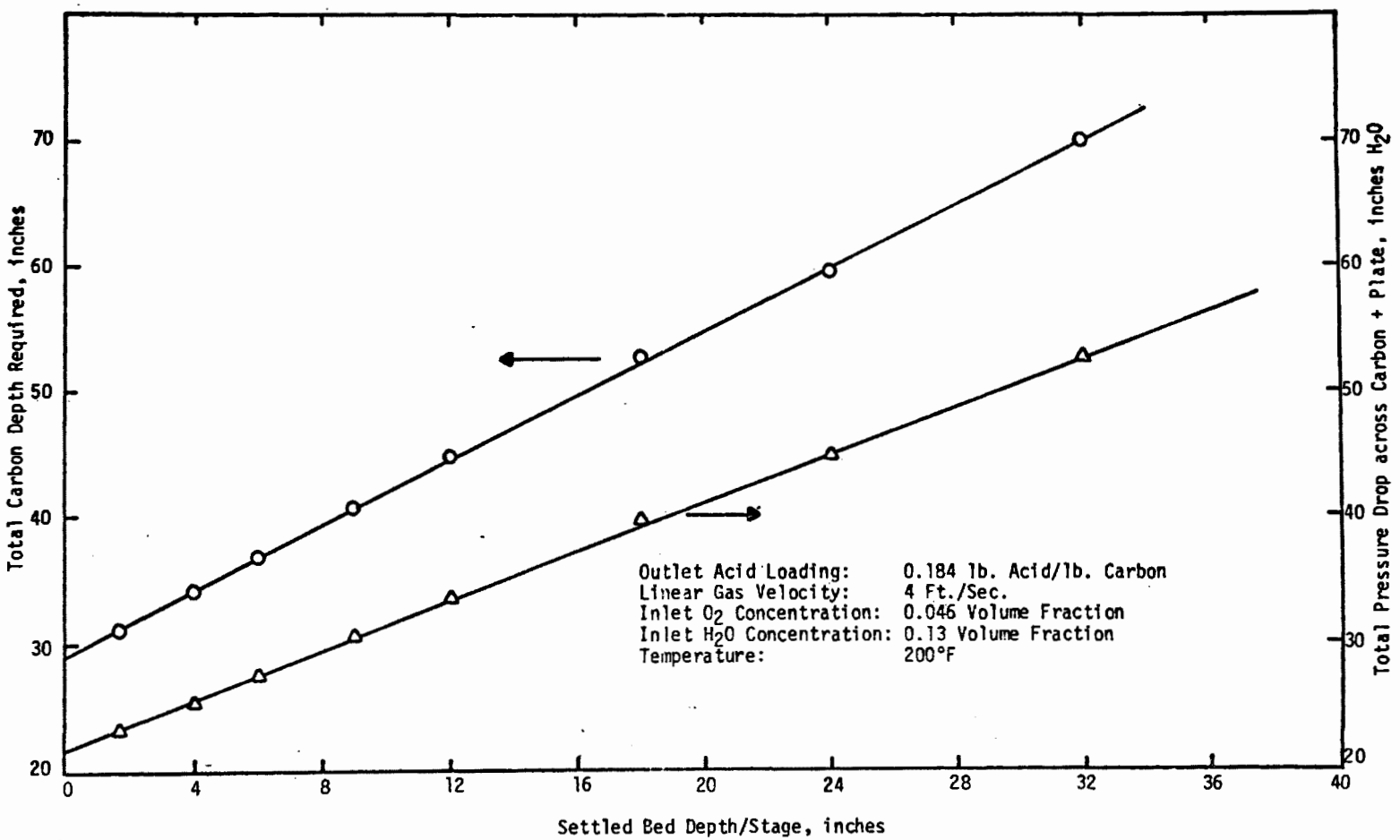

APPENDIX A-9-1

EFFECT OF CARBON BED DEPTH/STAGE ON THE TOTAL CARBON BED DEPTH REQUIRED TO REMOVE 90% OF AN INLET SO_2 CONCENTRATION OF 2000 PPM

Linear Gas Velocity, ft./sec.	Run Number
2	Test-1
2	Test-27
2	Test-28
2	Test-29
2	Test-30
3	Test-3
3	Test-31
3	Test-32
3	Test-33
3	Test-34
4	Test-4
4	Test-5
4	Test-6
4	Test-7
4	Test-8
4	Test-9
4	Test-10
4	Test-11

SO2 SORBER DESIGN

RUN NUMBER TEST-1 DATE 7 27 71

TOTAL CARBON RATE = 25.320 LBS/HR
OUTLET CARBON LOADING = 0.18375 LBS ACID/LB CARBON
HEIGHT OF CARBON/STAGE = 2.45 INCHES
DIAMETER OF VESSEL = 18.0 INCHES
CARBON USED = 0.
TOTAL GAS FLOW RATE = 9484. SCFH
INLET SO2 CONCENTRATION = 2000. PPM
INLET NO CONCENTRATION = 150. PPM
INLET O2 VOLUME FRACTION = 0.0460
INLET H2O VOLUME FRACTION = 0.1300
OUTLET SO2 CONCENTRATION = 200. PPM

TEMPERATURE = 200.0 DEG. F

STAGE	SO2 CONCENTRATION PPM	ACID LOADING LBS ACID/LB CARBON
1	2000.	0.1837
2	1723.	0.1553
3	1426.	0.1249
4	1117.	0.0933
5	807.	0.0615
6	511.	0.0312
7	252.	0.0047
0.23	200.0001	0.0

TOTAL CARBON REQUIRED = 17.71 INCHES
TOTAL STAGES REQUIRED ASSUMING 2.45 INCHES CARBON/STAGE = 7.23

SPACE VELOCITY = 3637. 1/HR

PRESSURE DROP ACROSS CARBON = 8.86 INCHES H2O
PRESSURE DROP ACROSS PLATES = 4.43 INCHES H2O
TOTAL PRESSURE DROP ACROSS STAGES = 13.28 INCHES H2O

SO2 SORBER DESIGN

RUN NUMBER TEST-3 DATE 7 27 71

TOTAL CARBON RATE = 37.980 LBS/HR
OUTLET CARBON LOADING = 0.18375 LBS ACID/LB CARBON
HEIGHT OF CARBON/STAGE = 1.85 INCHES
DIAMETER OF VESSEL = 18.0 INCHES
CARBON USED = 0.
TOTAL GAS FLOW RATE = 14227. SCFH
INLET SO2 CONCENTRATION = 2000. PPM
INLET NO CONCENTRATION = 150. PPM
INLET O2 VOLUME FRACTION = 0.0460
INLET H2O VOLUME FRACTION = 0.1300
OUTLET SO2 CONCENTRATION = 200. PPM

TEMPERATURE = 200.0 DEG. F

STAGE	SO2 CONCENTRATION PPM	ACID LOADING LBS ACID/LB CARBON
1	2000.	0.1837
2	1858.	0.1692
3	1711.	0.1541
4	1558.	0.1385
5	1402.	0.1225
6	1242.	0.1061
7	1081.	0.0896
8	920.	0.0731
9	761.	0.0568
10	607.	0.0410
11	461.	0.0261
12	326.	0.0122
13	206.	0.0
0.06	200.0001	0.0

TOTAL CARBON REQUIRED = 24.16 INCHES
TOTAL STAGES REQUIRED ASSUMING 1.85 INCHES CARBON/STAGE =13.06

SPACE VELOCITY = 4000. 1/HR

PRESSURE DROP ACROSS CARBON = 12.08 INCHES H2O
PRESSURE DROP ACROSS PLATES = 6.04 INCHES H2O
TOTAL PRESSURE DROP ACROSS STAGES = 18.12 INCHES H2O

SO2 SORBER DESIGN

RUN NUMBER TEST-4 DATE 7 27 71

TOTAL CARBON RATE = 50.640 LBS/HR
OUTLET CARBON LOADING = 0.18375 LBS ACID/LB CARBON
HEIGHT OF CARBON/STAGE = 1.65 INCHES
DIAMETER OF VESSEL = 18.0 INCHES
CARBON USED = 0.
TOTAL GAS FLOW RATE = 18969. SCFH
INLET SO2 CONCENTRATION = 2000. PPM
INLET NO CONCENTRATION = 150. PPM
INLET O2 VOLUME FRACTION = 0.0460
INLET H2O VOLUME FRACTION = 0.1300
OUTLET SO2 CONCENTRATION = 200. PPM

TEMPERATURE = 200.0 DEG. F

STAGE	SO2 CONCENTRATION PPM	ACID LOADING LBS ACID/LB CARBON
1	2000.	0.1837
2	1905.	0.1740
3	1807.	0.1640
4	1706.	0.1537
5	1604.	0.1431
6	1499.	0.1324
7	1392.	0.1215
8	1285.	0.1105
9	1176.	0.0993
10	1067.	0.0881
11	958.	0.0770
12	850.	0.0659
13	744.	0.0550
14	640.	0.0444
15	539.	0.0341
16	442.	0.0242
17	351.	0.0148
18	267.	0.0062
0.86	200.0001	0.0

TOTAL CARBON REQUIRED = 31.12 INCHES
TOTAL STAGES REQUIRED ASSUMING 1.65 INCHES CARBON/STAGE =18.86

SPACE VELOCITY = 4139. 1/HR

PRESSURE DROP ACROSS CARBON = 15.56 INCHES H2O
PRESSURE DROP ACROSS PLATES = 7.78 INCHES H2O
TOTAL PRESSURE DROP ACROSS STAGES = 23.34 INCHES H2O

SO2 SORBER DESIGN

RUN NUMBER TEST-5 DATE 7 27 71

TOTAL CARBON RATE = 50.640 LBS/HR
OUTLET CARBON LOADING = 0.18375 LBS ACID/LB CARBON
HEIGHT OF CARBON/STAGE = 4.00 INCHES
DIAMETER OF VESSEL = 18.0 INCHES
CARBON USED = 0.
TOTAL GAS FLOW RATE = 18969. SCFH
INLET SO2 CONCENTRATION = 2000. PPM
INLET NO CONCENTRATION = 150. PPM
INLET O2 VOLUME FRACTION = 0.0460
INLET H2O VOLUME FRACTION = 0.1300
OUTLET SO2 CONCENTRATION = 200. PPM

TEMPERATURE = 200.0 DEG. F

STAGE	SO2 CONCENTRATION PPM	ACID LOADING LBS ACID/LB CARBON
1	2000.	0.1837
2	1772.	0.1604
3	1531.	0.1357
4	1279.	0.1099
5	1023.	0.0836
6	768.	0.0575
7	525.	0.0326
8	306.	0.0102
0.56	200.0001	0.0

TOTAL CARBON REQUIRED = 34.22 INCHES
TOTAL STAGES REQUIRED ASSUMING 4.00 INCHES CARBON/STAGE = 8.56

SPACE VELOCITY = 3764. 1/HR

PRESSURE DROP ACROSS CARBON = 17.11 INCHES H2O
PRESSURE DROP ACROSS PLATES = 8.56 INCHES H2O
TOTAL PRESSURE DROP ACROSS STAGES = 25.67 INCHES H2O

SO2 SORBER DESIGN

RUN NUMBER TEST-6 DATE 7 27 71

TOTAL CARBON RATE = 50.640 LBS/HR
OUTLET CARBON LOADING = 0.18375 LBS ACID/LB CARBON
HEIGHT OF CARBON/STAGE = 6.00 INCHES
DIAMETER OF VESSEL = 18.0 INCHES
CARBON USED = 0.
TOTAL GAS FLOW RATE = 18969. SCFH
INLET SO2 CONCENTRATION = 2000. PPM
INLET NO CONCENTRATION = 150. PPM
INLET O2 VOLUME FRACTION = 0.0460
INLET H2O VOLUME FRACTION = 0.1300
OUTLET SO2 CONCENTRATION = 200. PPM

TEMPERATURE = 200.0 DEG. F

STAGE	SO2 CONCENTRATION PPM	ACID LOADING LBS ACID/LB CARBON
1	2000.	0.1837
2	1663.	0.1492
3	1299.	0.1119
4	922.	0.0734
5	558.	0.0360
6	241.	0.0035
0.15	200.0001	0.0

TOTAL CARBON REQUIRED = 36.88 INCHES
TOTAL STAGES REQUIRED ASSUMING 6.00 INCHES CARBON/STAGE = 6.15

SPACE VELOCITY = 3492. 1/HR

PRESSURE DROP ACROSS CARBON = 18.44 INCHES H2O
PRESSURE DROP ACROSS PLATES = 9.22 INCHES H2O
TOTAL PRESSURE DROP ACROSS STAGES = 27.66 INCHES H2O

SO2 SORBER DESIGN

RUN NUMBER TEST-7 DATE 7 27 71

TOTAL CARBON RATE = 50.640 LBS/HR
OUTLET CARBON LOADING = 0.18375 LBS ACID/LB CARBON
HEIGHT OF CARBON/STAGE = 9.00 INCHES
DIAMETER OF VESSEL = 18.0 INCHES
CARBON USED = 0.
TOTAL GAS FLOW RATE = 18969. SCFH
INLET SO2 CONCENTRATION = 2000. PPM
INLET NO CONCENTRATION = 150. PPM
INLET O2 VOLUME FRACTION = 0.0460
INLET H2O VOLUME FRACTION = 0.1300
OUTLET SO2 CONCENTRATION = 200. PPM

TEMPERATURE = 200.0 DEG. F

STAGE	SO2 CONCENTRATION PPM	ACID LOADING LBS ACID/LB CARBON
1	2000.	0.1837
2	1504.	0.1329
3	962.	0.0774
4	438.	0.0237
0.53	200.0001	0.0

TOTAL CARBON REQUIRED = 40.76 INCHES
TOTAL STAGES REQUIRED ASSUMING 9.00 INCHES CARBON/STAGE = 4.53

SPACE VELOCITY = 3161. 1/HR

PRESSURE DROP ACROSS CARBON = 20.38 INCHES H2O
PRESSURE DROP ACROSS PLATES = 10.19 INCHES H2O
TOTAL PRESSURE DROP ACROSS STAGES = 30.57 INCHES H2O

SO2 SORBER DESIGN

RUN NUMBER TEST-8 DATE 7 27 71

TOTAL CARBON RATE = 50.640 LBS/HR
OUTLET CARBON LOADING = 0.18375 LBS ACID/LB CARBON
HEIGHT OF CARBON/STAGE = 12.00 INCHES
DIAMETER OF VESSEL = 18.0 INCHES
CARBON USED = 0.
TOTAL GAS FLOW RATE = 18969. SCFH
INLET SO2 CONCENTRATION = 2000. PPM
INLET NO CONCENTRATION = 150. PPM
INLET O2 VOLUME FRACTION = 0.0460
INLET H2O VOLUME FRACTION = 0.1300
OUTLET SO2 CONCENTRATION = 200. PPM

TEMPERATURE = 200.0 DEG. F

STAGE	SO2 CONCENTRATION PPM	ACID LOADING LBS ACID/LB CARBON
1	2000.	0.1837
2	1351.	0.1173
3	650.	0.0454
0.72	200.0001	0.0

TOTAL CARBON REQUIRED = 44.67 INCHES
TOTAL STAGES REQUIRED ASSUMING12.00 INCHES CARBON/STAGE = 3.72

SPACE VELOCITY = 2884. 1/HR

PRESSURE DROP ACROSS CARBON = 22.33 INCHES H2O
PRESSURE DROP ACROSS PLATES = 11.17 INCHES H2O
TOTAL PRESSURE DROP ACROSS STAGES = 33.50 INCHES H2O

SO2 SORBER DESIGN

RUN NUMBER TEST-9 DATE 7 27 71

TOTAL CARBON RATE = 50.640 LBS/HR
OUTLET CARBON LOADING = 0.18375 LBS ACID/LB CARBON
HEIGHT OF CARBON/STAGE = 18.00 INCHES
DIAMETER OF VESSEL = 18.0 INCHES
CARBON USED = 0.
TOTAL GAS FLOW RATE = 18969. SCFH
INLET SO2 CONCENTRATION = 2000. PPM
INLET NO CONCENTRATION = 150. PPM
INLET O2 VOLUME FRACTION = 0.0460
INLET H2O VOLUME FRACTION = 0.1300
OUTLET SO2 CONCENTRATION = 200. PPM

TEMPERATURE = 200.0 DEG. F

STAGE	SO2 CONCENTRATION PPM	ACID LOADING LBS ACID/LB CARBON
1	2000.	0.1837
2	1066.	0.0880
0.93	200.0001	0.0

TOTAL CARBON REQUIRED = 52.70 INCHES
TOTAL STAGES REQUIRED ASSUMING18.00 INCHES CARBON/STAGE = 2.93

SPACE VELOCITY = 2444. 1/HR

PRESSURE DROP ACROSS CARBON = 26.35 INCHES H2O
PRESSURE DROP ACROSS PLATES = 13.17 INCHES H2O
TOTAL PRESSURE DROP ACROSS STAGES = 39.52 INCHES H2O

SO2 SORBER DESIGN

RUN NUMBER TEST-10 DATE 7 27 71

TOTAL CARBON RATE = 50.640 LBS/HR
OUTLET CARBON LOADING = 0.18375 LBS ACID/LB CARBON
HEIGHT OF CARBON/STAGE = 24.00 INCHES
DIAMETER OF VESSEL = 18.0 INCHES
CARBON USED = 0.
TOTAL GAS FLOW RATE = 18969. SCFH
INLET SO2 CONCENTRATION = 2000. PPM
INLET NO CONCENTRATION = 150. PPM
INLET O2 VOLUME FRACTION = 0.0460
INLET H2O VOLUME FRACTION = 0.1300
OUTLET SO2 CONCENTRATION = 200. PPM

TEMPERATURE = 200.0 DEG. F

STAGE	SO2 CONCENTRATION PPM	ACID LOADING LBS ACID/LB CARBON
1	2000.	0.1837
2	808.	0.0616
0.48	200.0001	0.0

TOTAL CARBON REQUIRED = 59.61 INCHES
TOTAL STAGES REQUIRED ASSUMING24.00 INCHES CARBON/STAGE = 2.48

SPACE VELOCITY = 2161. 1/HR

PRESSURE DROP ACROSS CARBON = 29.81 INCHES H2O
PRESSURE DROP ACROSS PLATES = 14.90 INCHES H2O
TOTAL PRESSURE DROP ACROSS STAGES = 44.71 INCHES H2O

SO2 SORBER DESIGN

RUN NUMBER TEST-11 DATE 7 27 71

TOTAL CARBON RATE = 50.640 LBS/HR
OUTLET CARBON LOADING = 0.18375 LBS ACID/LB CARBON
HEIGHT OF CARBON/STAGE = 32.00 INCHES
DIAMETER OF VESSEL = 18.0 INCHES
CARBON USED = 0.
TOTAL GAS FLOW RATE = 18969. SCFH
INLET SO2 CONCENTRATION = 2000. PPM
INLET NO CONCENTRATION = 150. PPM
INLET O2 VOLUME FRACTION = 0.0460
INLET H2O VOLUME FRACTION = 0.1300
OUTLET SO2 CONCENTRATION = 200. PPM

TEMPERATURE = 200.0 DEG. F

STAGE	SO2 CONCENTRATION PPM	ACID LOADING LBS ACID/LB CARBON
1	2000.	0.1837
2	510.	0.0311
0.19	200.0001	0.0

TOTAL CARBON REQUIRED = 70.10 INCHES
TOTAL STAGES REQUIRED ASSUMING32.00 INCHES CARBON/STAGE = 2.19

SPACE VELOCITY = 1838. 1/HR

PRESSURE DROP ACROSS CARBON = 35.05 INCHES H2O
PRESSURE DROP ACROSS PLATES = 17.52 INCHES H2O
TOTAL PRESSURE DROP ACROSS STAGES = 52.57 INCHES H2O

SO2 SORBER DESIGN

RUN NUMBER TEST-27 DATE 7 30 71

TOTAL CARBON RATE = 25.320 LBS/HR
OUTLET CARBON LOADING = 0.18375 LBS ACID/LB CARBON
HEIGHT OF CARBON/STAGE = 4.00 INCHES
DIAMETER OF VESSEL = 18.0 INCHES
CARBON USED = 0.
TOTAL GAS FLOW RATE = 9484. SCFH
INLET SO2 CONCENTRATION = 2000. PPM
INLET NO CONCENTRATION = 150. PPM
INLET O2 VOLUME FRACTION = 0.0460
INLET H2O VOLUME FRACTION = 0.1300
OUTLET SO2 CONCENTRATION = 200. PPM

TEMPERATURE = 200.0 DEG. F

STAGE	SO2 CONCENTRATION PPM	ACID LOADING LBS ACID/LB CARBON
1	2000.	0.1837
2	1556.	0.1383
3	1072.	0.0887
4	589.	0.0392
0.94	200.0001	0.0

TOTAL CARBON REQUIRED = 19.78 INCHES
TOTAL STAGES REQUIRED ASSUMING 4.00 INCHES CARBON/STAGE = 4.94

SPACE VELOCITY = 3257. 1/HR

PRESSURE DROP ACROSS CARBON = 9.89 INCHES H2O
PRESSURE DROP ACROSS PLATES = 4.94 INCHES H2O
TOTAL PRESSURE DROP ACROSS STAGES = 14.83 INCHES H2O

SO2 SORBER DESIGN

RUN NUMBER TEST-28 DATE 7 30 71

TOTAL CARBON RATE = 25.320 LBS/HR
OUTLET CARBON LOADING = 0.18375 LBS ACID/LB CARBON
HEIGHT OF CARBON/STAGE = 9.00 INCHES
DIAMETER OF VESSEL = 18.0 INCHES
CARBON USED = 0.
TOTAL GAS FLOW RATE = 9484. SCFH
INLET SO2 CONCENTRATION = 2000. PPM
INLET NO CONCENTRATION = 150. PPM
INLET O2 VOLUME FRACTION = 0.0460
INLET H2O VOLUME FRACTION = 0.1300
OUTLET SO2 CONCENTRATION = 200. PPM

TEMPERATURE = 200.0 DEG. F

STAGE	SO2 CONCENTRATION PPM	ACID LOADING LBS ACID/LB CARBON
1	2000.	0.1837
2	1066.	0.0880
0.93	200.0001	0.0

TOTAL CARBON REQUIRED = 26.35 INCHES
TOTAL STAGES REQUIRED ASSUMING 9.00 INCHES CARBON/STAGE = 2.93

SPACE VELOCITY = 2444. 1/HR

PRESSURE DROP ACROSS CARBON = 13.17 INCHES H2O
PRESSURE DROP ACROSS PLATES = 6.59 INCHES H2O
TOTAL PRESSURE DROP ACROSS STAGES = 19.76 INCHES H2O

SO2 SORBER DESIGN

RUN NUMBER TEST-29 DATE 7 30 71

TOTAL CARBON RATE = 25.320 LBS/HR
OUTLET CARBON LOADING = 0.18375 LBS ACID/LB CARBON
HEIGHT OF CARBON/STAGE = 18.00 INCHES
DIAMETER OF VESSEL = 18.0 INCHES
CARBON USED = 0.
TOTAL GAS FLOW RATE = 9484. SCFH
INLET SO2 CONCENTRATION = 2000. PPM
INLET NO CONCENTRATION = 150. PPM
INLET O2 VOLUME FRACTION = 0.0460
INLET H2O VOLUME FRACTION = 0.1300
OUTLET SO2 CONCENTRATION = 200. PPM

TEMPERATURE = 200.0 DEG. F

STAGE	SO2 CONCENTRATION PPM	ACID LOADING LBS ACID/LB CARBON
1	2000.	0.1837
2	383.	0.0181
0.10	200.0001	0.0

TOTAL CARBON REQUIRED = 37.85 INCHES
TOTAL STAGES REQUIRED ASSUMING18.00 INCHES CARBON/STAGE = 2.10

SPACE VELOCITY = 1701. 1/HR

PRESSURE DROP ACROSS CARBON = 18.93 INCHES H2O
PRESSURE DROP ACROSS PLATES = 9.46 INCHES H2O
TOTAL PRESSURE DROP ACROSS STAGES = 28.39 INCHES H2O

SO2 SORBER DESIGN

RUN NUMBER TEST-30 DATE 7 30 71

TOTAL CARBON RATE = 25.320 LBS/HR
OUTLET CARBON LOADING = 0.18375 LBS ACID/LB CARBON
HEIGHT OF CARBON/STAGE = 32.00 INCHES
DIAMETER OF VESSEL = 18.0 INCHES
CARBON USED = 0.
TOTAL GAS FLOW RATE = 9484. SCFH
INLET SO2 CONCENTRATION = 2000. PPM
INLET NO CONCENTRATION = 150. PPM
INLET O2 VOLUME FRACTION = 0.0460
INLET H2O VOLUME FRACTION = 0.1300
OUTLET SO2 CONCENTRATION = 200. PPM

TEMPERATURE = 200.0 DEG. F

STAGE	SO2 CONCENTRATION PPM	ACID LOADING LBS ACID/LB CARBON
1	2000.	0.1837
0.67	200.0001	0.0

TOTAL CARBON REQUIRED = 53.42 INCHES
TOTAL STAGES REQUIRED ASSUMING32.00 INCHES CARBON/STAGE = 1.67

SPACE VELOCITY = 1206. 1/HR

PRESSURE DROP ACROSS CARBON = 26.71 INCHES H2O
PRESSURE DROP ACROSS PLATES = 13.36 INCHES H2O
TOTAL PRESSURE DROP ACROSS STAGES = 40.07 INCHES H2O

SO2 SORBER DESIGN

RUN NUMBER TEST-31 DATE 7 30 71

TOTAL CARBON RATE = 37.980 LBS/HR
OUTLET CARBON LOADING = 0.18375 LBS ACID/LB CARBON
HEIGHT OF CARBON/STAGE = 4.00 INCHES
DIAMETER OF VESSEL = 18.0 INCHES
CARBON USED = 0.
TOTAL GAS FLOW RATE = 14227. SCFH
INLET SO2 CONCENTRATION = 2000. PPM
INLET NO CONCENTRATION = 150. PPM
INLET O2 VOLUME FRACTION = 0.0460
INLET H2O VOLUME FRACTION = 0.1300
OUTLET SO2 CONCENTRATION = 200. PPM

TEMPERATURE = 200.0 DEG. F

STAGE	SO2 CONCENTRATION PPM	ACID LOADING LBS ACID/LB CARBON
1	2000.	0.1837
2	1699.	0.1529
3	1376.	0.1198
4	1040.	0.0854
5	706.	0.0512
6	397.	0.0196
0.75	200.0001	0.0

TOTAL CARBON REQUIRED = 26.99 INCHES
TOTAL STAGES REQUIRED ASSUMING 4.00 INCHES CARBON/STAGE = 6.75

SPACE VELOCITY = 3579. 1/HR

PRESSURE DROP ACROSS CARBON = 13.50 INCHES H2O
PRESSURE DROP ACROSS PLATES = 6.75 INCHES H2O
TOTAL PRESSURE DROP ACROSS STAGES = 20.24 INCHES H2O

SO2 SORBER DESIGN

RUN NUMBER TEST-32 DATE 7 30 71

TOTAL CARBON RATE = 37.980 LBS/HR
OUTLET CARBON LOADING = 0.18375 LBS ACID/LB CARBON
HEIGHT OF CARBON/STAGE = 9.00 INCHES
DIAMETER OF VESSEL = 18.0 INCHES
CARBON USED = 0.
TOTAL GAS FLOW RATE = 14227. SCFH
INLET SO2 CONCENTRATION = 2000. PPM
INLET NO CONCENTRATION = 150. PPM
INLET O2 VOLUME FRACTION = 0.0460
INLET H2O VOLUME FRACTION = 0.1300
OUTLET SO2 CONCENTRATION = 200. PPM

TEMPERATURE = 200.0 DEG. F

STAGE	SO2 CONCENTRATION PPM	ACID LOADING LBS ACID/LB CARBON
1	2000.	0.1837
2	1351.	0.1173
3	650.	0.0454
0.72	200.0001	0.0

TOTAL CARBON REQUIRED = 33.50 INCHES
TOTAL STAGES REQUIRED ASSUMING 9.00 INCHES CARBON/STAGE = 3.72

SPACE VELOCITY = 2884. 1/HR

PRESSURE DROP ACROSS CARBON = 16.75 INCHES H2O
PRESSURE DROP ACROSS PLATES = 8.38 INCHES H2O
TOTAL PRESSURE DROP ACROSS STAGES = 25.13 INCHES H2O

SO2 SORBER DESIGN

RUN NUMBER TEST-33 DATE 7 30 71

TOTAL CARBON RATE = 37.980 LBS/HR
OUTLET CARBON LOADING = 0.18375 LBS ACID/LB CARBON
HEIGHT OF CARBON/STAGE = 18.00 INCHES
DIAMETER OF VESSEL = 18.0 INCHES
CARBON USED = 0.
TOTAL GAS FLOW RATE = 14227. SCFH
INLET SO2 CONCENTRATION = 2000. PPM
INLET NO CONCENTRATION = 150. PPM
INLET O2 VOLUME FRACTION = 0.0460
INLET H2O VOLUME FRACTION = 0.1300
OUTLET SO2 CONCENTRATION = 200. PPM

TEMPERATURE = 200.0 DEG. F

STAGE	SO2 CONCENTRATION PPM	ACID LOADING LBS ACID/LB CARBON
1	2000.	0.1837
2	808.	0.0616
0.48	200.0001	0.0

TOTAL CARBON REQUIRED = 44.71 INCHES
TOTAL STAGES REQUIRED ASSUMING18.00 INCHES CARBON/STAGE = 2.48

SPACE VELOCITY = 2161. 1/HR

PRESSURE DROP ACROSS CARBON = 22.36 INCHES H2O
PRESSURE DROP ACROSS PLATES = 11.18 INCHES H2O
TOTAL PRESSURE DROP ACROSS STAGES = 33.53 INCHES H2O

SO2 SORBER DESIGN

RUN NUMBER TEST-34 CATE 7 30 71

TOTAL CARBON RATE = 37.980 LBS/HR
OUTLET CARBON LOADING = 0.18375 LBS ACID/LB CARBON
HEIGHT OF CARBON/STAGE = 32.00 INCHES
DIAMETER OF VESSEL = 18.0 INCHES
CARBON USED = 0.
TOTAL GAS FLOW RATE = 14227. SCFH
INLET SO2 CONCENTRATION = 2000. PPM
INLET NO CONCENTRATION = 150. PPM
INLET O2 VOLUME FRACTION = 0.0460
INLET H2O VOLUME FRACTION = 0.1300
OUTLET SO2 CONCENTRATION = 200. PPM

TEMPERATURE = 200.0 DEG. F

STAGE	SO2 CONCENTRATION PPM	ACID LOADING LBS ACID/LB CARBON
1	2000.	0.1837
2	204.	0.0
0.00	200.0001	0.0

TOTAL CARBON REQUIRED = 64.07 INCHES
TOTAL STAGES REQUIRED ASSUMING32.00 INCHES CARBON/STAGE = 2.00

SPACE VELOCITY = 1508. 1/HR

PRESSURE DROP ACROSS CARBON = 32.03 INCHES H2O
PRESSURE DROP ACROSS PLATES = 16.02 INCHES H2O
TOTAL PRESSURE DROP ACRCSS STAGES = 48.05 INCHES H2O

APPENDIX A-9-2

EFFECT OF THE LINEAR GAS VELOCITY ON THE TOTAL CARBON BED DEPTH REQUIRED TO REMOVE 90% OF AN INLET SO_2 CONCENTRATION OF 2000 PPM

Carbon Bed Depth/Stage, inches	Run Number
4	Test-27
4	Test-31
4	Test-5
9	Test-28
9	Test-32
9	Test-7
18	Test-29
18	Test-33
18	Test-9
32	Test-30
32	Test-34
32	Test-11

SO2 SORBER DESIGN

RUN NUMBER TEST-5 DATE 7 27 71

TOTAL CARBON RATE = 50.640 LBS/HR
OUTLET CARBON LOADING = 0.18375 LBS ACID/LB CARBON
HEIGHT OF CARBON/STAGE = 4.00 INCHES
DIAMETER OF VESSEL = 18.0 INCHES
CARBON USED = 0.
TOTAL GAS FLOW RATE = 18969. SCFH
INLET SO2 CONCENTRATION = 2000. PPM
INLET NO CONCENTRATION = 150. PPM
INLET O2 VOLUME FRACTION = 0.0460
INLET H2O VOLUME FRACTION = 0.1300
OUTLET SO2 CONCENTRATION = 200. PPM

TEMPERATURE = 200.0 DEG. F

STAGE	SO2 CONCENTRATION PPM	ACID LOADING LBS ACID/LB CARBON
1	2000.	0.1837
2	1772.	0.1604
3	1531.	0.1357
4	1279.	0.1099
5	1023.	0.0836
6	768.	0.0575
7	525.	0.0326
8	306.	0.0102
0.56	200.0001	0.0

TOTAL CARBON REQUIRED = 34.22 INCHES
TOTAL STAGES REQUIRED ASSUMING 4.00 INCHES CARBON/STAGE = 8.56

SPACE VELOCITY = 3764. 1/HR

PRESSURE DROP ACROSS CARBON = 17.11 INCHES H2O
PRESSURE DROP ACROSS PLATES = 8.56 INCHES H2O
TOTAL PRESSURE DROP ACROSS STAGES = 25.67 INCHES H2O

SO2 SORBER DESIGN

RUN NUMBER TEST-7 DATE 7 27 71

TOTAL CARBON RATE = 50.640 LBS/HR
OUTLET CARBON LOADING = 0.18375 LBS ACID/LB CARBON
HEIGHT OF CARBON/STAGE = 9.00 INCHES
DIAMETER OF VESSEL = 18.0 INCHES
CARBON USED = 0.
TOTAL GAS FLOW RATE = 18969. SCFH
INLET SO2 CONCENTRATION = 2000. PPM
INLET NO CONCENTRATION = 150. PPM
INLET O2 VOLUME FRACTION = 0.0460
INLET H2O VOLUME FRACTION = 0.1300
OUTLET SO2 CONCENTRATION = 200. PPM

TEMPERATURE = 200.0 DEG. F

STAGE	SO2 CONCENTRATION PPM	ACID LOADING LBS ACID/LB CARBON
1	2000.	0.1837
2	1504.	0.1329
3	962.	0.0774
4	438.	0.0237
0.53	200.0001	0.0

TOTAL CARBON REQUIRED = 40.76 INCHES
TOTAL STAGES REQUIRED ASSUMING 9.00 INCHES CARBON/STAGE = 4.53

SPACE VELOCITY = 3161. 1/HR

PRESSURE DROP ACROSS CARBON = 20.38 INCHES H2O
PRESSURE DROP ACROSS PLATES = 10.19 INCHES H2O
TOTAL PRESSURE DROP ACROSS STAGES = 30.57 INCHES H2O

SO2 SORBER DESIGN

RUN NUMBER TEST-9 DATE 7 27 71

TOTAL CARBON RATE = 50.640 LBS/HR
OUTLET CARBON LOADING = 0.18375 LBS ACID/LB CARBON
HEIGHT OF CARBON/STAGE = 18.00 INCHES
DIAMETER OF VESSEL = 18.0 INCHES
CARBON USED = 0.
TOTAL GAS FLOW RATE = 18969. SCFH
INLET SO2 CONCENTRATION = 2000. PPM
INLET NO CONCENTRATION = 150. PPM
INLET O2 VOLUME FRACTION = 0.0460
INLET H2O VOLUME FRACTION = 0.1300
OUTLET SO2 CONCENTRATION = 200. PPM

TEMPERATURE = 200.0 DEG. F

STAGE	SO2 CONCENTRATION PPM	ACID LOADING LBS ACID/LB CARBON
1	2000.	0.1837
2	1066.	0.0880
0.93	200.0001	0.0

TOTAL CARBON REQUIRED = 52.70 INCHES
TOTAL STAGES REQUIRED ASSUMING18.00 INCHES CARBON/STAGE = 2.93

SPACE VELOCITY = 2444. 1/HR

PRESSURE DROP ACROSS CARBON = 26.35 INCHES H2O
PRESSURE DROP ACROSS PLATES = 13.17 INCHES H2O
TOTAL PRESSURE DROP ACROSS STAGES = 39.52 INCHES H2O

SO2 SORBER DESIGN

RUN NUMBER TEST-11 DATE 7 27 71

TOTAL CARBON RATE = 50.640 LBS/HR
OUTLET CARBON LOADING = 0.18375 LBS ACID/LB CARBON
HEIGHT OF CARBON/STAGE = 32.00 INCHES
DIAMETER OF VESSEL = 18.0 INCHES
CARBON USED = 0.
TOTAL GAS FLOW RATE = 18969. SCFH
INLET SO2 CONCENTRATION = 2000. PPM
INLET NO CONCENTRATION = 150. PPM
INLET O2 VOLUME FRACTION = 0.0460
INLET H2O VOLUME FRACTION = 0.1300
OUTLET SO2 CONCENTRATION = 200. PPM

TEMPERATURE = 200.0 DEG. F

STAGE	SO2 CONCENTRATION PPM	ACID LOADING LBS ACID/LB CARBON
1	2000.	0.1837
2	510.	0.0311
0.19	200.0001	0.07

TOTAL CARBON REQUIRED = 70.10 INCHES
TOTAL STAGES REQUIRED ASSUMING32.00 INCHES CARBON/STAGE = 2.19

SPACE VELOCITY = 1838. 1/HR

PRESSURE DROP ACROSS CARBON = 35.05 INCHES H2O
PRESSURE DROP ACROSS PLATES = 17.52 INCHES H2O
TOTAL PRESSURE DROP ACROSS STAGES = 52.57 INCHES H2O

SO2 SORBER DESIGN

RUN NUMBER TEST-27 DATE 7 30 71

TOTAL CARBON RATE = 25.320 LBS/HR
OUTLET CARBON LOADING = 0.18375 LBS ACID/LB CARBON
HEIGHT OF CARBON/STAGE = 4.00 INCHES
DIAMETER OF VESSEL = 18.0 INCHES
CARBON USED = 0.
TOTAL GAS FLOW RATE = 9484. SCFH
INLET SO2 CONCENTRATION = 2000. PPM
INLET NO CONCENTRATION = 150. PPM
INLET O2 VOLUME FRACTION = 0.0460
INLET H2O VOLUME FRACTION = 0.1300
OUTLET SO2 CONCENTRATION = 200. PPM

TEMPERATURE = 200.0 DEG. F

STAGE	SO2 CONCENTRATION PPM	ACID LOADING LBS ACID/LB CARBON
1	2000.	0.1837
2	1556.	0.1383
3	1072.	0.0887
4	589.	0.0392
0.94	200.0001	0.0

TOTAL CARBON REQUIRED = 19.78 INCHES
TOTAL STAGES REQUIRED ASSUMING 4.00 INCHES CARBON/STAGE = 4.94

SPACE VELOCITY = 3257. 1/HR

PRESSURE DROP ACROSS CARBON = 9.89 INCHES H2O
PRESSURE DROP ACROSS PLATES = 4.94 INCHES H2O
TOTAL PRESSURE DROP ACROSS STAGES = 14.83 INCHES H2O

SO2 SORBER DESIGN

RUN NUMBER TEST-28 DATE 7 30 71

TOTAL CARBON RATE = 25.320 LBS/HR
OUTLET CARBON LOADING = 0.18375 LBS ACID/LB CARBON
HEIGHT OF CARBON/STAGE = 9.00 INCHES
DIAMETER OF VESSEL = 18.0 INCHES
CARBON USED = 0.
TOTAL GAS FLOW RATE = 9484. SCFH
INLET SO2 CONCENTRATION = 2000. PPM
INLET NO CONCENTRATION = 150. PPM
INLET O2 VOLUME FRACTION = 0.0460
INLET H2O VOLUME FRACTION = 0.1300
OUTLET SO2 CONCENTRATION = 200. PPM

TEMPERATURE = 200.0 DEG. F

STAGE	SO2 CONCENTRATION PPM	ACID LOADING LBS ACID/LB CARBON
1	2000.	0.1837
2	1066.	0.0880
0.93	200.0001	0.0

TOTAL CARBON REQUIRED = 26.35 INCHES
TOTAL STAGES REQUIRED ASSUMING 9.00 INCHES CARBON/STAGE = 2.93

SPACE VELOCITY = 2444. 1/HR

PRESSURE DROP ACROSS CARBON = 13.17 INCHES H2O
PRESSURE DROP ACROSS PLATES = 6.59 INCHES H2O
TOTAL PRESSURE DROP ACROSS STAGES = 19.76 INCHES H2O

SO2 SORBER DESIGN

RUN NUMBER TEST-29 DATE 7 30 71

TOTAL CARBON RATE = 25.320 LBS/HR
OUTLET CARBON LOADING = 0.18375 LBS ACID/LB CARBON
HEIGHT OF CARBON/STAGE = 18.00 INCHES
DIAMETER OF VESSEL = 18.0 INCHES
CARBON USED = 0.
TOTAL GAS FLOW RATE = 9484. SCFH
INLET SO2 CONCENTRATION = 2000. PPM
INLET NO CONCENTRATION = 150. PPM
INLET O2 VOLUME FRACTION = 0.0460
INLET H2O VOLUME FRACTION = 0.1300
OUTLET SO2 CONCENTRATION = 200. PPM

TEMPERATURE = 200.0 DEG. F

STAGE	SO2 CONCENTRATION PPM	ACID LOADING LBS ACID/LB CARBON
1	2000.	0.1837
2	383.	0.0181
0.10	200.0001	0.0

TOTAL CARBON REQUIRED = 37.85 INCHES
TOTAL STAGES REQUIRED ASSUMING18.00 INCHES CARBON/STAGE = 2.10

SPACE VELOCITY = 1701. 1/HR

PRESSURE DROP ACROSS CARBON = 18.93 INCHES H2O
PRESSURE DROP ACROSS PLATES = 9.46 INCHES H2O
TOTAL PRESSURE DROP ACROSS STAGES = 28.39 INCHES H2O

SO2 SORBER DESIGN

RUN NUMBER TEST-30 DATE 7 30 71

TOTAL CARBON RATE = 25.320 LBS/HR
OUTLET CARBON LOADING = 0.18375 LBS ACID/LB CARBON
HEIGHT OF CARBON/STAGE = 32.00 INCHES
DIAMETER OF VESSEL = 18.0 INCHES
CARBON USED = 0.
TOTAL GAS FLOW RATE = 9484. SCFH
INLET SO2 CONCENTRATION = 2000. PPM
INLET NO CONCENTRATION = 150. PPM
INLET O2 VOLUME FRACTION = 0.0460
INLET H2O VOLUME FRACTION = 0.1300
OUTLET SO2 CONCENTRATION = 200. PPM

TEMPERATURE = 200.0 DEG. F

STAGE	SO2 CONCENTRATION PPM	ACID LOADING LBS ACID/LB CARBON
1	2000.	0.1837
0.67	200.0001	0.0

TOTAL CARBON REQUIRED = 53.42 INCHES
TOTAL STAGES REQUIRED ASSUMING32.00 INCHES CARBON/STAGE = 1.67

SPACE VELOCITY = 1206. 1/HR

PRESSURE DROP ACROSS CARBON = 26.71 INCHES H2O
PRESSURE DROP ACROSS PLATES = 13.36 INCHES H2O
TOTAL PRESSURE DROP ACROSS STAGES = 40.07 INCHES H2O

SO2 SORBER DESIGN

RUN NUMBER TEST-31 DATE 7 30 71

TOTAL CARBON RATE = 37.980 LBS/HR
OUTLET CARBON LOADING = 0.18375 LBS ACID/LB CARBON
HEIGHT OF CARBON/STAGE = 4.00 INCHES
DIAMETER OF VESSEL = 18.0 INCHES
CARBON USED = 0.
TOTAL GAS FLOW RATE = 14227. SCFH
INLET SO2 CONCENTRATION = 2000. PPM
INLET NO CONCENTRATION = 150. PPM
INLET O2 VOLUME FRACTION = 0.0460
INLET H2O VOLUME FRACTION = 0.1300
OUTLET SO2 CONCENTRATION = 200. PPM

TEMPERATURE = 200.0 DEG. F

STAGE	SO2 CONCENTRATION PPM	ACID LOADING LBS ACID/LB CARBON
1	2000.	0.1837
2	1699.	0.1529
3	1376.	0.1198
4	1040.	0.0854
5	706.	0.0512
6	397.	0.0196
0.75	200.0001	0.0

TOTAL CARBON REQUIRED = 26.99 INCHES
TOTAL STAGES REQUIRED ASSUMING 4.00 INCHES CARBON/STAGE = 6.75

SPACE VELOCITY = 3579. 1/HR

PRESSURE DROP ACROSS CARBON = 13.50 INCHES H2O
PRESSURE DROP ACROSS PLATES = 6.75 INCHES H2O
TOTAL PRESSURE DROP ACROSS STAGES = 20.24 INCHES H2O

SO2 SORBER DESIGN

RUN NUMBER TEST-32 DATE 7 30 71

TOTAL CARBON RATE = 37.980 LBS/HR
OUTLET CARBON LOADING = 0.18375 LBS ACID/LB CARBON
HEIGHT OF CARBON/STAGE = 9.00 INCHES
DIAMETER OF VESSEL = 18.0 INCHES
CARBON USED = 0.
TOTAL GAS FLOW RATE = 14227. SCFH
INLET SO2 CONCENTRATION = 2000. PPM
INLET NO CONCENTRATION = 150. PPM
INLET O2 VOLUME FRACTION = 0.0460
INLET H2O VOLUME FRACTION = 0.1300
OUTLET SO2 CONCENTRATION = 200. PPM

TEMPERATURE = 200.0 DEG. F

STAGE	SO2 CONCENTRATION PPM	ACID LOADING LBS ACID/LB CARBON
1	2000.	0.1837
2	1351.	0.1173
3	650.	0.0454
0.72	200.0001	0.0

TOTAL CARBON REQUIRED = 33.50 INCHES
TOTAL STAGES REQUIRED ASSUMING 9.00 INCHES CARBON/STAGE = 3.72

SPACE VELOCITY = 2884. 1/HR

PRESSURE DROP ACROSS CARBON = 16.75 INCHES H2O
PRESSURE DROP ACROSS PLATES = 8.38 INCHES H2O
TOTAL PRESSURE DROP ACROSS STAGES = 25.13 INCHES H2O

SO2 SORBER DESIGN

RUN NUMBER TEST-33 DATE 7 30 71

TOTAL CARBON RATE = 37.980 LBS/HR
OUTLET CARBON LOADING = 0.18375 LBS ACID/LB CARBON
HEIGHT OF CARBON/STAGE = 18.00 INCHES
DIAMETER OF VESSEL = 18.0 INCHES
CARBON USED = 0.
TOTAL GAS FLOW RATE = 14227. SCFH
INLET SO2 CONCENTRATION = 2000. PPM
INLET NO CONCENTRATION = 150. PPM
INLET O2 VOLUME FRACTION = 0.0460
INLET H2O VOLUME FRACTION = 0.1300
OUTLET SO2 CONCENTRATION = 200. PPM

TEMPERATURE = 200.0 DEG. F

STAGE	SO2 CONCENTRATION PPM	ACID LOADING LBS ACID/LB CARBON
1	2000.	0.1837
2	808.	0.0616
0.48	200.0001	0.0

TOTAL CARBON REQUIRED = 44.71 INCHES
TOTAL STAGES REQUIRED ASSUMING18.00 INCHES CARBON/STAGE = 2.48

SPACE VELOCITY = 2161. 1/HR

PRESSURE DROP ACROSS CARBON = 22.36 INCHES H2O
PRESSURE DROP ACROSS PLATES = 11.18 INCHES H2O
TOTAL PRESSURE DROP ACROSS STAGES = 33.53 INCHES H2O

SO2 SORBER DESIGN

RUN NUMBER TEST-34 CATE 7 30 71

TOTAL CARBON RATE = 37.980 LBS/HR
OUTLET CARBON LOADING = 0.18375 LBS ACID/LB CARBON
HEIGHT OF CARBON/STAGE = 32.00 INCHES
DIAMETER OF VESSEL = 18.0 INCHES
CARBON USED = 0.
TOTAL GAS FLOW RATE = 14227. SCFH
INLET SO2 CONCENTRATION = 2000. PPM
INLET NO CONCENTRATION = 150. PPM
INLET O2 VOLUME FRACTION = 0.0460
INLET H2O VOLUME FRACTION = 0.1300
OUTLET SO2 CONCENTRATION = 200. PPM

TEMPERATURE = 200.0 DEG. F

STAGE	SO2 CONCENTRATION PPM	ACID LOADING LBS ACID/LB CARBON
1	2000.	0.1837
2	204.	0.0
0.00	200.0001	0.0

TOTAL CARBON REQUIRED = 64.07 INCHES
TOTAL STAGES REQUIRED ASSUMING32.00 INCHES CARBON/STAGE = 2.00

SPACE VELOCITY = 1508. 1/HR

PRESSURE DROP ACROSS CARBON = 32.03 INCHES H2O
PRESSURE DROP ACROSS PLATES = 16.02 INCHES H2O
TOTAL PRESSURE DROP ACROSS STAGES = 48.05 INCHES H2O

APPENDIX A-9-3

EFFECT OF THE INLET O_2 CONCENTRATION ON THE TOTAL CARBON BED DEPTH REQUIRED TO REMOVE 90% OF AN INLET SO_2 CONCENTRATION OF 2000 PPM

SO2 SORBER DESIGN

RUN NUMBER TEST-7 DATE 7 27 71

TOTAL CARBON RATE = 50.640 LBS/HR
OUTLET CARBON LOADING = 0.18375 LBS ACID/LB CARBON
HEIGHT OF CARBON/STAGE = 9.00 INCHES
DIAMETER OF VESSEL = 18.0 INCHES
CARBON USED = 0.
TOTAL GAS FLOW RATE = 18969. SCFH
INLET SO2 CONCENTRATION = 2000. PPM
INLET NO CONCENTRATION = 150. PPM
INLET O2 VOLUME FRACTION = 0.0460
INLET H2O VOLUME FRACTION = 0.1300
OUTLET SO2 CONCENTRATION = 200. PPM

TEMPERATURE = 200.0 DEG. F

STAGE	SO2 CONCENTRATION PPM	ACID LOADING LBS ACID/LB CARBON
1	2000.	0.1837
2	1504.	0.1329
3	962.	0.0774
4	400.	0.0237
0.53	200.0001	0.0

TOTAL CARBON REQUIRED = 40.76 INCHES
TOTAL STAGES REQUIRED ASSUMING 9.00 INCHES CARBON/STAGE = 4.53

SPACE VELOCITY = 3161. 1/HR

PRESSURE DROP ACROSS CARBON = 20.38 INCHES H2O
PRESSURE DROP ACROSS PLATES = 10.19 INCHES H2O
TOTAL PRESSURE DROP ACROSS STAGES = 30.57 INCHES H2O

SO2 SORBER DESIGN

RUN NUMBER TEST-12 DATE 7 27 71

TOTAL CARBON RATE = 50.640 LBS/HR
OUTLET CARBON LOADING = 0.18375 LBS ACID/LB CARBON
HEIGHT OF CARBON/STAGE = 9.00 INCHES
DIAMETER OF VESSEL = 18.0 INCHES
CARBON USED = 0.
TOTAL GAS FLOW RATE = 18969. SCFH
INLET SO2 CONCENTRATION = 2000. PPM
INLET NO CONCENTRATION = 150. PPM
INLET O2 VOLUME FRACTION = 0.0200
INLET H2O VOLUME FRACTION = 0.1300
OUTLET SO2 CONCENTRATION = 200. PPM

TEMPERATURE = 200.0 DEG. F

STAGE	SO2 CONCENTRATION PPM	ACID LOADING LBS ACID/LB CARBON
1	2000.	0.1837
2	1699.	0.1530
3	1377.	0.1199
4	1041.	0.0855
5	708.	0.0514
6	399.	0.0198
0.76	200.0001	0.0

TOTAL CARBON REQUIRED = 60.80 INCHES
TOTAL STAGES REQUIRED ASSUMING 9.00 INCHES CARBON/STAGE = 6.76

SPACE VELOCITY = 2119. 1/HR

PRESSURE DROP ACROSS CARBON = 30.40 INCHES H2O
PRESSURE DROP ACROSS PLATES = 15.20 INCHES H2O
TOTAL PRESSURE DROP ACROSS STAGES = 45.60 INCHES H2O

SO2 SORBER DESIGN

RUN NUMBER TEST-13 DATE 7 27 71

TOTAL CARBON RATE = 50.640 LBS/HR
OUTLET CARBON LOADING = 0.18375 LBS ACID/LB CARBON
HEIGHT OF CARBON/STAGE = 9.00 INCHES
DIAMETER OF VESSEL = 18.0 INCHES
CARBON USED = 0.
TOTAL GAS FLOW RATE = 18969. SCFH
INLET SO2 CONCENTRATION = 2000. PPM
INLET NO CONCENTRATION = 150. PPM
INLET O2 VOLUME FRACTION = 0.0300
INLET H2O VOLUME FRACTION = 0.1300
OUTLET SO2 CONCENTRATION = 200. PPM

TEMPERATURE = 200.0 DEG. F

STAGE	SO2 CONCENTRATION PPM	ACID LOADING LBS ACID/LB CARBON
1	2000.	0.1837
2	1616.	0.1444
3	1199.	0.1017
4	773.	0.0580
5	378.	0.0176
0.53	200.0001	0.0

TOTAL CARBON REQUIRED = 49.74 INCHES
TOTAL STAGES REQUIRED ASSUMING 9.00 INCHES CARBON/STAGE = 5.53

SPACE VELOCITY = 2590. 1/HR

PRESSURE DROP ACROSS CARBON = 24.87 INCHES H2O
PRESSURE DROP ACROSS PLATES = 12.43 INCHES H2O
TOTAL PRESSURE DROP ACROSS STAGES = 37.30 INCHES H2O

SO2 SORBER DESIGN

RUN NUMBER TEST-14 DATE 7 27 71

TOTAL CARBON RATE = 50.640 LBS/HR
OUTLET CARBON LOADING = 0.18375 LBS ACID/LB CARBON
HEIGHT OF CARBON/STAGE = 9.00 INCHES
DIAMETER OF VESSEL = 18.0 INCHES
CARBON USED = 0.
TOTAL GAS FLOW RATE = 18969. SCFH
INLET SO2 CONCENTRATION = 2000. PPM
INLET NO CONCENTRATION = 150. PPM
INLET O2 VOLUME FRACTION = 0.0600
INLET H2O VOLUME FRACTION = 0.1300
OUTLET SO2 CONCENTRATION = 200. PPM

TEMPERATURE = 200.0 DEG. F

STAGE	SO2 CONCENTRATION PPM	ACID LOADING LBS ACID/LB CARBON
1	2000.	0.1837
2	1419.	0.1243
3	788.	0.0595
4	223.	0.0017
0.05	200.0001	0.0

TOTAL CARBON REQUIRED = 36.42 INCHES
TOTAL STAGES REQUIRED ASSUMING 9.00 INCHES CARBON/STAGE = 4.05

SPACE VELOCITY = 3537. 1/HR

PRESSURE DROP ACROSS CARBON = 18.21 INCHES H2O
PRESSURE DROP ACROSS PLATES = 9.11 INCHES H2O
TOTAL PRESSURE DROP ACROSS STAGES = 27.32 INCHES H2O

SO2 SORBER DESIGN

RUN NUMBER TEST-15 DATE 7 27 71

TOTAL CARBON RATE = 50.640 LBS/HR
OUTLET CARBON LOADING = 0.18375 LBS ACID/LB CARBON
HEIGHT OF CARBON/STAGE = 9.00 INCHES
DIAMETER OF VESSEL = 18.0 INCHES
CARBON USED = 0.
TOTAL GAS FLOW RATE = 18969. SCFH
INLET SO2 CONCENTRATION = 2000. PPM
INLET NO CONCENTRATION = 150. PPM
INLET O2 VOLUME FRACTION = 0.1000
INLET H2O VOLUME FRACTION = 0.1300
OUTLET SO2 CONCENTRATION = 200. PPM

TEMPERATURE = 200.0 DEG. F

STAGE	SO2 CONCENTRATION PPM	ACID LOADING LBS ACID/LB CARBON
1	2000.	0.1837
2	1220.	0.1039
3	403.	0.0201
0.28	200.0001	0.0

TOTAL CARBON REQUIRED = 29.51 INCHES
TOTAL STAGES REQUIRED ASSUMING 9.00 INCHES CARBON/STAGE = 3.28

SPACE VELOCITY = 4365. 1/HR

PRESSURE DROP ACROSS CARBON = 14.76 INCHES H2O
PRESSURE DROP ACROSS PLATES = 7.38 INCHES H2O
TOTAL PRESSURE DROP ACROSS STAGES = 22.13 INCHES H2O

APPENDIX A-9-4

EFFECT OF THE INLET H_2O CONCENTRATION ON THE TOTAL CARBON BED DEPTH REQUIRED TO REMOVE 90% OF AN INLET SO_2 CONCENTRATION OF 2000 PPM

SO2 SORBER DESIGN

RUN NUMBER TEST-7 DATE 7 27 71

TOTAL CARBON RATE = 50.640 LBS/HR
OUTLET CARBON LOADING = 0.18375 LBS ACID/LB CARBON
HEIGHT OF CARBON/STAGE = 9.00 INCHES
DIAMETER OF VESSEL = 18.0 INCHES
CARBON USED = 0.
TOTAL GAS FLOW RATE = 18969. SCFH
INLET SO2 CONCENTRATION = 2000. PPM
INLET NO CONCENTRATION = 150. PPM
INLET O2 VOLUME FRACTION = 0.0460
INLET H2O VOLUME FRACTION = 0.1300
OUTLET SO2 CONCENTRATION = 200. PPM

TEMPERATURE = 200.0 DEG. F

STAGE	SO2 CONCENTRATION PPM	ACID LOADING LBS ACID/LB CARBON
1	2000.	0.1837
2	1504.	0.1329
3	962.	0.0774
4	438.	0.0237
0.53	200.0001	0.0

TOTAL CARBON REQUIRED = 40.76 INCHES
TOTAL STAGES REQUIRED ASSUMING 9.00 INCHES CARBON/STAGE = 4.53

SPACE VELOCITY = 3161. 1/HR

PRESSURE DROP ACROSS CARBON = 20.38 INCHES H2O
PRESSURE DROP ACROSS PLATES = 10.19 INCHES H2O
TOTAL PRESSURE DROP ACROSS STAGES = 30.57 INCHES H2O

SO2 SORBER DESIGN

RUN NUMBER TEST-19 DATE 7 27 71

TOTAL CARBON RATE = 50.640 LBS/HR
OUTLET CARBON LOADING = 0.18375 LBS ACID/LB CARBON
HEIGHT OF CARBON/STAGE = 9.00 INCHES
DIAMETER OF VESSEL = 18.0 INCHES
CARBON USED = 0.
TOTAL GAS FLOW RATE = 18969. SCFH
INLET SO2 CONCENTRATION = 2000. PPM
INLET NO CONCENTRATION = 150. PPM
INLET O2 VOLUME FRACTION = 0.0460
INLET H2O VOLUME FRACTION = 0.1000
OUTLET SO2 CONCENTRATION = 200. PPM

TEMPERATURE = 200.0 DEG. F

STAGE	SO2 CONCENTRATION PPM	ACID LOADING LBS ACID/LB CARBON
1	2000.	0.1837
2	1586.	0.1413
3	1136.	0.0952
4	680.	0.0486
5	275.	0.0071
0.22	200.0001	0.0

TOTAL CARBON REQUIRED = 46.94 INCHES
TOTAL STAGES REQUIRED ASSUMING 9.00 INCHES CARBON/STAGE = 5.22

SPACE VELOCITY = 2744. 1/HR

PRESSURE DROP ACROSS CARBON = 23.47 INCHES H2O
PRESSURE DROP ACROSS PLATES = 11.73 INCHES H2O
TOTAL PRESSURE DROP ACROSS STAGES = 35.20 INCHES H2O

SO2 SORBER DESIGN

RUN NUMBER TEST-20 DATE 7 27 71

TOTAL CARBON RATE = 50.640 LBS/HR
OUTLET CARBON LOADING = 0.18375 LBS ACID/LB CARBON
HEIGHT OF CARBON/STAGE = 9.00 INCHES
DIAMETER OF VESSEL = 18.0 INCHES
CARBON USED = 0.
TOTAL GAS FLOW RATE = 18969. SCFH
INLET SO2 CONCENTRATION = 2000. PPM
INLET NO CONCENTRATION = 150. PPM
INLET O2 VOLUME FRACTION = 0.0460
INLET H2O VOLUME FRACTION = 0.1500
OUTLET SO2 CONCENTRATION = 200. PPM

TEMPERATURE = 200.0 DEG. F

STAGE	SO2 CONCENTRATION PPM	ACID LOADING LBS ACID/LB CARBON
1	2000.	0.1837
2	1452.	0.1277
3	856.	0.0665
4	302.	0.0098
0.21	200.0001	0.0

TOTAL CARBON REQUIRED = 37.93 INCHES
TOTAL STAGES REQUIRED ASSUMING 9.00 INCHES CARBON/STAGE = 4.21

SPACE VELOCITY = 3396. 1/HR

PRESSURE DROP ACROSS CARBON = 18.97 INCHES H2O
PRESSURE DROP ACROSS PLATES = 9.48 INCHES H2O
TOTAL PRESSURE DROP ACROSS STAGES = 28.45 INCHES H2O

SO2 SORBER DESIGN

RUN NUMBER TEST-21 DATE 7 27 71

TOTAL CARBON RATE = 50.640 LBS/HR
OUTLET CARBON LOADING = 0.18375 LBS ACID/LB CARBON
HEIGHT OF CARBON/STAGE = 9.00 INCHES
DIAMETER OF VESSEL = 18.0 INCHES
CARBON USED = 0.
TOTAL GAS FLOW RATE = 18969. SCFH
INLET SO2 CONCENTRATION = 2000. PPM
INLET NO CONCENTRATION = 150. PPM
INLET O2 VOLUME FRACTION = 0.0460
INLET H2O VOLUME FRACTION = 0.2000
OUTLET SO2 CONCENTRATION = 200. PPM

TEMPERATURE = 200.0 DEG. F

STAGE	SO2 CONCENTRATION PPM	ACID LOADING LBS ACID/LB CARBON
1	2000.	0.1837
2	1335.	0.1156
3	618.	0.0422
0.66	200.0001	0.0

TOTAL CARBON REQUIRED = 32.90 INCHES
TOTAL STAGES REQUIRED ASSUMING 9.00 INCHES CARBON/STAGE = 3.66

SPACE VELOCITY = 3915. 1/HR

PRESSURE DROP ACROSS CARBON = 16.45 INCHES H2O
PRESSURE DROP ACROSS PLATES = 8.23 INCHES H2O
TOTAL PRESSURE DROP ACROSS STAGES = 24.68 INCHES H2O

APPENDIX A-9-5

EFFECT OF THE INLET SO_2 CONCENTRATION ON THE TOTAL CARBON BED DEPTH REQUIRED FOR 90% REMOVAL

SO2 SORBER DESIGN

RUN NUMBER TEST-35 DATE 7 27 71

TOTAL CARBON RATE = 12.690 LBS/HR
OUTLET CARBON LOADING = 0.18375 LBS ACID/LB CARBON
HEIGHT OF CARBON/STAGE = 9.00 INCHES
DIAMETER OF VESSEL = 18.0 INCHES
CARBON USED = 0.
TOTAL GAS FLOW RATE = 18969. SCFH
INLET SO2 CONCENTRATION = 500. PPM
INLET NO CONCENTRATION = 150. PPM
INLET O2 VOLUME FRACTION = 0.0460
INLET H2O VOLUME FRACTION = 0.1300
OUTLET SO2 CONCENTRATION = 50. PPM

TEMPERATURE = 200.0 DEG. F

STAGE	SO2 CONCENTRATION PPM	ACID LOADING LBS ACID/LB CARBON
1	500.	0.1837
2	237.	0.0761
0.69	50.0000	0.0

TOTAL CARBON REQUIRED = 24.23 INCHES
TOTAL STAGES REQUIRED ASSUMING 9.00 INCHES CARBON/STAGE = 2.69

SPACE VELOCITY = 5316. 1/HR

PRESSURE DROP ACROSS CARBON = 12.12 INCHES H2O
PRESSURE DROP ACROSS PLATES = 6.06 INCHES H2O
TOTAL PRESSURE DROP ACROSS STAGES = 18.17 INCHES H2O

RATE EXPRESSION USED IN DESIGN CALCULATIONS

```
RATEC(I)=COEFF * (1-X(I)/XS)**A * (YSO2**B) * (YO2**C) * (YH2O**D)
   WHERE COEFF=K * EXP(-E/R*(1/(T+460)))
```

T=	200.	XS=	0.38	YO2=	0.046	YH2O=	0.130		
-E/R=	5520.	A=	1.000	B=	0.400	C=	0.630	D=	0.730
K=0.000159									

SO2 SORBER DESIGN

RUN NUMBER TEST-36 DATE 7 27 70

TOTAL CARBON RATE = 25.380 LBS/HR
OUTLET CARBON LOADING = 0.18375 LBS ACID/LB CARBON
HEIGHT OF CARBON/STAGE = 9.00 INCHES
DIAMETER OF VESSEL = 18.0 INCHES
CARBON USED = 0.
TOTAL GAS FLOW RATE = 18969. SCFH
INLET SO2 CONCENTRATION = 1000. PPM
INLET NO CONCENTRATION = 150. PPM
INLET O2 VOLUME FRACTION = 0.0460
INLET H2O VOLUME FRACTION = 0.1300
OUTLET SO2 CONCENTRATION = 100. PPM

TEMPERATURE = 200.0 DEG. F

STAGE	SO2 CONCENTRATION PPM	ACID LOADING LBS ACID/LB CARBON
1	1000.	0.1837
2	635.	0.1092
3	247.	0.0299
0.43	100.0000	0.0

TOTAL CARBON REQUIRED = 30.84 INCHES
TOTAL STAGES REQUIRED ASSUMING 9.00 INCHES CARBON/STAGE = 3.43

SPACE VELOCITY = 4177. 1/HR

PRESSURE DROP ACROSS CARBON = 15.42 INCHES H2O
PRESSURE DROP ACROSS PLATES = 7.71 INCHES H2O
TOTAL PRESSURE DROP ACROSS STAGES = 23.13 INCHES H2O

RATE EXPRESSION USED IN DESIGN CALCULATIONS

RATEC(I)=COEFF * (1-X(I)/XS)**A * (YSO2**B) * (YO2**C) * (YH2O**D)
WHERE COEFF=K * EXP(-E/R*(1/(T+460)))

T= 200. XS= 0.38 YO2= 0.046 YH2O= 0.130
-E/R= 5520. A= 1.000 B= 0.400 C= 0.630 D= 0.730
K=0.000159

SO2 SORBER DESIGN

RUN NUMBER TEST-37 DATE 7 27 71

TOTAL CARBON RATE = 38.060 LBS/HR
OUTLET CARBON LOADING = 0.18375 LBS ACID/LB CARBON
HEIGHT OF CARBON/STAGE = 9.00 INCHES
DIAMETER OF VESSEL = 18.0 INCHES
CARBON USED = 0.
TOTAL GAS FLOW RATE = 18969. SCFH
INLET SO2 CONCENTRATION = 1500. PPM
INLET NO CONCENTRATION = 150. PPM
INLET O2 VOLUME FRACTION = 0.0460
INLET H2O VOLUME FRACTION = 0.1300
OUTLET SO2 CONCENTRATION = 150. PPM

TEMPERATURE = 200.0 DEG. F

STAGE	SO2 CONCENTRATION PPM	ACID LOADING LBS ACID/LB CARBON
1	1500.	0.1837
2	1062.	0.1241
3	587.	0.0592
4	163.	0.0015
0.03	150.0001	0.0

TOTAL CARBON REQUIRED = 36.31 INCHES
TOTAL STAGES REQUIRED ASSUMING 9.00 INCHES CARBON/STAGE = 4.03

SPACE VELOCITY = 3547. 1/HR

PRESSURE DROP ACROSS CARBON = 18.18 INCHES H2O
PRESSURE DROP ACROSS PLATES = 9.08 INCHES H2O
TOTAL PRESSURE DROP ACROSS STAGES = 27.24 INCHES H2O

RATE EXPRESSION USED IN DESIGN CALCULATIONS

RATEC(I)=COEFF * (1-X(I)/XS)**A * (YSO2**B) * (YO2**C) * (YH2O**D)
WHERE COEFF=K * EXP(-E/R*(1/(T+460)))

T= 200. XS= 0.38 YO2= 0.046 YH2O= 0.130
-E/R= 5520. A= 1.000 B= 0.400 C= 0.630 D= 0.730
K=0.000159

SO2 SORBER DESIGN

RUN NUMBER TEST-38 DATE 7 27 71

TOTAL CARBON RATE = 50.750 LBS/HR
OUTLET CARBON LOADING = 0.18375 LBS ACID/LB CARBON
HEIGHT OF CARBON/STAGE = 9.00 INCHES
DIAMETER OF VESSEL = 18.0 INCHES
CARBON USED = 0.
TOTAL GAS FLOW RATE = 18969. SCFH
INLET SO2 CONCENTRATION = 2000. PPM
INLET NO CONCENTRATION = 150. PPM
INLET O2 VOLUME FRACTION = 0.0460
INLET H2O VOLUME FRACTION = 0.1300
OUTLET SO2 CONCENTRATION = 200. PPM

TEMPERATURE = 200.0 DEG. F

STAGE	SO2 CONCENTRATION PPM	ACID LOADING LBS ACID/LB CARBON
1	2000.	0.1837
2	1504.	0.1330
3	962.	0.0777
4	439.	0.0241
0.53	200.0001	0.0

TOTAL CARBON REQUIRED = 40.77 INCHES
TOTAL STAGES REQUIRED ASSUMING 9.00 INCHES CARBON/STAGE = 4.53

SPACE VELOCITY = 3159. 1/HR

PRESSURE DROP ACROSS CARBON = 20.39 INCHES H2O
PRESSURE DROP ACROSS PLATES = 10.19 INCHES H2O
TOTAL PRESSURE DROP ACROSS STAGES = 30.58 INCHES H2O

RATE EXPRESSION USED IN DESIGN CALCULATIONS

RATEC(I)=COEFF * (1-X(I)/XS)**A * (YSO2**B) * (YO2**C) * (YH2O**D)
WHERE COEFF=K * EXP(-E/R*(1/(T+460)))

T= 200. XS= 0.38 YO2= 0.046 YH2O= 0.130
-E/R= 5520. A= 1.000 B= 0.400 C= 0.630 D= 0.730
K=0.000159

SO2 SORBER DESIGN

RUN NUMBER TEST-39 DATE 7 27 71

TOTAL CARBON RATE = 63.440 LBS/HR
OUTLET CARBON LOADING = 0.18375 LBS ACID/LB CARBON
HEIGHT OF CARBON/STAGE = 9.00 INCHES
DIAMETER OF VESSEL = 18.0 INCHES
CARBON USED = 0.
TOTAL GAS FLOW RATE = 18969. SCFH
INLET SO2 CONCENTRATION = 2500. PPM
INLET NO CONCENTRATION = 150. PPM
INLET O2 VOLUME FRACTION = 0.0460
INLET H2O VOLUME FRACTION = 0.1300
OUTLET SO2 CONCENTRATION = 250. PPM

TEMPERATURE = 200.0 DEG. F

STAGE	SO2 CONCENTRATION PPM	ACID LOADING LBS ACID/LB CARBON
1	2500.	0.1837
2	1953.	0.1391
3	1358.	0.0904
4	762.	0.0417
5	253.	0.0000
0.01	249.9999	0.0

TOTAL CARBON REQUIRED = 45.07 INCHES
TOTAL STAGES REQUIRED ASSUMING 9.00 INCHES CARBON/STAGE = 5.01

SPACE VELOCITY 2858. 1/HR

PRESSURE DROP ACROSS CARBON = 22.53 INCHES H2O
PRESSURE DROP ACROSS PLATES = 11.27 INCHES H2O
TOTAL PRESSURE DROP ACROSS STAGES = 33.80 INCHES H2O

RATE EXPRESSION USED IN DESIGN CALCULATIONS

```
RATEC(I)=COEFF * (1-X(I)/XS)**A * (YSO2**B) * (YO2**C) * (YH2O**D)
   WHERE COEFF=K * EXP(-E/R*(1/(T+460)))
```

T=	200.	XS=	0.38	YO2=	0.046	YH2O=	0.130		
-E/R=	5520.	A=	1.000	B=	0.400	C=	0.630	D=	0.730
K=0.000159									

SO2 SORBER DESIGN

RUN NUMBER TEST-40 DATE 7 27 71

TOTAL CARBON RATE = 76.130 LBS/HR
OUTLET CARBON LOADING = 0.18375 LBS ACID/LB CARBON
HEIGHT OF CARBON/STAGE = 9.00 INCHES
DIAMETER OF VESSEL = 18.0 INCHES
CARBON USED = 0.
TOTAL GAS FLOW RATE = 18969. SCFH
INLET SO2 CONCENTRATION = 3000. PPM
INLET NO CONCENTRATION = 150. PPM
INLET O2 VOLUME FRACTION = 0.0460
INLET H2O VOLUME FRACTION = 0.1300
OUTLET SO2 CONCENTRATION = 300. PPM

TEMPERATURE = 200.0 DEG. F

STAGE	SO2 CONCENTRATION PPM	ACID LOADING LBS ACID/LB CARBON
1	3000.	0.1837
2	2409.	0.1435
3	1768.	0.0998
4	1114.	0.0552
5	516.	0.0145
0.42	300.0000	0.0

TOTAL CARBON REQUIRED = 48.78 INCHES
TOTAL STAGES REQUIRED ASSUMING 9.00 INCHES CARBON/STAGE = 5.42

SPACE VELOCITY = 2640. 1/HR

PRESSURE DROP ACROSS CARBON = 24.39 INCHES H2O
PRESSURE DROP ACROSS PLATES = 12.20 INCHES H2O
TOTAL PRESSURE DROP ACROSS STAGES = 36.59 INCHES H2O

RATE EXPRESSION USED IN DESIGN CALCULATIONS

```
RATEC(I)=COEFF * (1-X(I)/XS)**A * (YSO2**B) * (YO2**C) * (YH2O**D)
   WHERE COEFF=K * EXP(-E/R*(1/(T+460)))
```

T= 200. XS= 0.38 YO2= 0.046 YH2O= 0.130
-E/R= 5520. A= 1.000 B= 0.400 C= 0.630 D= 0.730
K=0.000159

SO2 SORBER DESIGN

RUN NUMBER TEST-41 DATE 7 27 71

TOTAL CARBON RATE =101.500 LBS/HR
OUTLET CARBON LOADING = 0.18375 LBS ACID/LB CARBON
HEIGHT OF CARBON/STAGE = 9.00 INCHES
DIAMETER OF VESSEL = 18.0 INCHES
CARBON USED = 0.
TOTAL GAS FLOW RATE = 10969. SCFH
INLET SO2 CONCENTRATION = 4000. PPM
INLET NO CONCENTRATION = 150. PPM
INLET O2 VOLUME FRACTION = 0.0460
INLET H2O VOLUME FRACTION = 0.1300
OUTLET SO2 CONCENTRATION = 400. PPM

TEMPERATURE = 200.0 DEG. F

STAGE	SO2 CONCENTRATION PPM	ACID LOADING LBS ACID/LB CARBON
1	4000.	0.1837
2	3332.	0.1496
3	2612.	0.1128
4	1867.	0.0747
5	1143.	0.0377
6	510.	0.0054
0.20	400.0000	0.0

TOTAL CARBON REQUIRED = 55.79 INCHES
TOTAL STAGES REQUIRED ASSUMING 9.00 INCHES CARBON/STAGE = 6.20

SPACE VELOCITY = 2309. 1/HR

PRESSURE DROP ACROSS CARBON = 27.90 INCHES H2O
PRESSURE DROP ACROSS PLATES = 13.95 INCHES H2O
TOTAL PRESSURE DROP ACROSS STAGES = 41.84 INCHES H2O

RATE EXPRESSION USED IN DESIGN CALCULATIONS

RATEC(I)=COEFF * (1-X(I)/XS)**A * (YSO2**B) * (YO2**C) * (YH2O**D)
WHERE COEFF=K * EXP(-E/R*(1/(T+460)))

T= 200. XS= 0.38 YO2= 0.046 YH2O= 0.130
-E/R= 5520. A= 1.000 B= 0.400 C= 0.630 D= 0.730
K=0.000159

APPENDIX A-9-6

EFFECT OF THE INLET SO_2 CONCENTRATION ON THE TOTAL CARBON BED DEPTH REQUIRED TO ACHIEVE AN OUTLET SO_2 CONCENTRATION OF 100 PPM

SO2 SORBER DESIGN

RUN NUMBER TEST-36 DATE 7 27 70

TOTAL CARBON RATE = 25.380 LBS/HR
OUTLET CARBON LOADING = 0.18375 LBS ACID/LB CARBON
HEIGHT OF CARBON/STAGE = 9.00 INCHES
DIAMETER OF VESSEL = 18.0 INCHES
CARBON USED = 0.
TOTAL GAS FLOW RATE = 18969. SCFH
INLET SO2 CONCENTRATION = 1000. PPM
INLET NO CONCENTRATION = 150. PPM
INLET O2 VOLUME FRACTION = 0.0460
INLET H2O VOLUME FRACTION = 0.1300
OUTLET SO2 CONCENTRATION = 100. PPM

TEMPERATURE = 200.0 DEG. F

STAGE	SO2 CONCENTRATION PPM	ACID LOADING LBS ACID/LB CARBON
1	1000.	0.1837
2	635.	0.1092
3	247.	0.0299
0.43	100.0000	0.0

TOTAL CARBON REQUIRED = 30.84 INCHES
TOTAL STAGES REQUIRED ASSUMING 9.00 INCHES CARBON/STAGE = 3.43

SPACE VELOCITY = 4177. 1/HR

PRESSURE DROP ACROSS CARBON = 15.42 INCHES H2O
PRESSURE DROP ACROSS PLATES = 7.71 INCHES H2O
TOTAL PRESSURE DROP ACROSS STAGES = 23.13 INCHES H2O

RATE EXPRESSION USED IN DESIGN CALCULATIONS

```
RATEC(I)=COEFF * (1-X(I)/XS)**A * (YSO2**B) * (YO2**C) * (YH2O**D)
   WHERE COEFF=K * EXP(-E/R*(1/(T+460)))
```

T= 200. XS= 0.38 YO2= 0.046 YH2O= 0.130
-E/R= 5520. A= 1.000 B= 0.400 C= 0.630 D= 0.730
K=0.000159

SO2 SORBER DESIGN

RUN NUMBER TEST-49 DATE 7 27 71

TOTAL CARBON RATE = 53.570 LBS/HR
OUTLET CARBON LOADING = 0.18375 LBS ACID/LB CARBON
HEIGHT OF CARBON/STAGE = 9.00 INCHES
DIAMETER OF VESSEL = 18.0 INCHES
CARBON USED = 0.
TOTAL GAS FLOW RATE = 18969. SCFH
INLET SO2 CONCENTRATION = 2000. PPM
INLET NO CONCENTRATION = 150. PPM
INLET O2 VOLUME FRACTION = 0.0460
INLET H2O VOLUME FRACTION = 0.1300
OUTLET SO2 CONCENTRATION = 100. PPM

TEMPERATURE = 200.0 DEG. F

STAGE	SO2 CONCENTRATION PPM	ACID LOADING LBS ACID/LB CARBON
1	2000.	0.1837
2	1504.	0.1357
3	968.	0.0838
4	451.	0.0338
0.88	100.0000	0.0

TOTAL CARBON REQUIRED = 43.90 INCHES
TOTAL STAGES REQUIRED ASSUMING 9.00 INCHES CARBON/STAGE = 4.88

SPACE VELOCITY = 2934. 1/HR

PRESSURE DROP ACROSS CARBON = 21.95 INCHES H2O
PRESSURE DROP ACROSS PLATES = 10.98 INCHES H2O
TOTAL PRESSURE DROP ACROSS STAGES = 32.93 INCHES H2O

RATE EXPRESSION USED IN DESIGN CALCULATIONS

RATEC(I)=COEFF * (1-X(I)/XS)**A * (YSO2**B) * (YO2**C) * (YH2O**D)
WHERE COEFF=K * EXP(-E/R*(1/(T+460)))

T= 200. XS= 0.38 YO2= 0.046 YH2O= 0.130
-E/R= 5520. A= 1.000 B= 0.400 C= 0.630 D= 0.730
K=0.000159

SO2 SORBER DESIGN

RUN NUMBER TEST-50 DATE 7 27 71

TOTAL CARBON RATE =110.000 LBS/HR
OUTLET CARBON LOADING = 0.18375 LBS ACID/LB CARBON
HEIGHT OF CARBON/STAGE - 9.00 INCHES
DIAMETER OF VESSEL = 18.0 INCHES
CARBON USED - 0.
TOTAL GAS FLOW RATE = 18969. SCFH
INLET SO2 CONCENTRATION = 4000. PPM
INLET NO CONCENTRATION = 150. PPM
INLET O2 VOLUME FRACTION = 0.0460
INLET H2O VOLUME FRACTION = 0.1300
OUTLET SO2 CONCENTRATION - 100. PPM

TEMPERATURE = 200.0 DEG. F

STAGE	SO2 CONCENTRATION PPM	ACID LOADING LBS ACID/LB CARBON
1	4000.	0.1837
2	3332.	0.1523
3	2620.	0.1187
4	1889.	0.0842
5	1182.	0.0508
6	559.	0.0215
7	113.	0.0004
0.04	100.0000	0.0

TOTAL CARBON REQUIRED = 63.36 INCHES
TOTAL STAGES REQUIRED ASSUMING 9.00 INCHES CARBON/STAGE = 7.04

SPACE VELOCITY = 2033. 1/HR

PRESSURE DROP ACROSS CARBON = 31.68 INCHES H2O
PRESSURE DROP ACROSS PLATES = 15.84 INCHES H2O
TOTAL PRESSURE DROP ACROSS STAGES = 47.52 INCHES H2O

RATE EXPRESSION USED IN DESIGN CALCULATIONS

RATEC(I)=COEFF * (1-X(I)/XS)**A * (YSO2**B) * (YO2**C) * (YH2O**D)
WHERE COEFF=K * EXP(-E/R*(1/(T+460)))

T= 200. XS= 0.38 YO2= 0.046 YH2O= 0.130
-E/R= 5520. A= 1.000 B= 0.400 C= 0.630 D= 0.730
K=0.000159

APPENDIX A-9-7

EFFECT OF THE INLET SO_2 CONCENTRATION ON THE TOTAL CARBON BED DEPTH REQUIRED TO ACHIEVE AN OUTLET SO_2 CONCENTRATION OF 50 PPM

SO2 SORBER DESIGN

RUN NUMBER TEST-35 DATE 7 27 71

TOTAL CARBON RATE = 12.690 LBS/HR
OUTLET CARBON LOADING = 0.18375 LBS ACID/LB CARBON
HEIGHT OF CARBON/STAGE = 9.00 INCHES
DIAMETER OF VESSEL = 18.0 INCHES
CARBON USED = 0.
TOTAL GAS FLOW RATE = 18969. SCFH
INLET SO2 CONCENTRATION = 500. PPM
INLET NO CONCENTRATION = 150. PPM
INLET O2 VOLUME FRACTION = 0.0460
INLET H2O VOLUME FRACTION = 0.1300
OUTLET SO2 CONCENTRATION = 50. PPM

TEMPERATURE = 200.0 DEG. F

STAGE	SO2 CONCENTRATION PPM	ACID LOADING LBS ACID/LB CARBON
1	500.	0.1837
2	237.	0.0761
0.69	50.0000	0.0

TOTAL CARBON REQUIRED = 24.23 INCHES
TOTAL STAGES REQUIRED ASSUMING 9.00 INCHES CARBON/STAGE = 2.69

SPACE VELOCITY = 5316. 1/HR

PRESSURE DROP ACROSS CARBON = 12.12 INCHES H2O
PRESSURE DROP ACROSS PLATES = 6.06 INCHES H2O
TOTAL PRESSURE DROP ACROSS STAGES = 18.17 INCHES H2O

RATE EXPRESSION USED IN DESIGN CALCULATIONS

```
RATEC(I)=COEFF * (1-X(I)/XS)**A * (YSO2**B) * (YO2**C) * (YH2O**D)
   WHERE COEFF=K * EXP(-E/R*(1/(T+460)))
```

T=	200.	XS=	0.38	YO2=	0.046	YH2O=	0.130		
-E/R=	5520.	A=	1.000	B=	0.400	C=	0.630	D=	0.730
K=0.000159									

SO2 SORBER DESIGN

RUN NUMBER TEST-53 DATE 7 27 71

TOTAL CARBON RATE = 54.980 LBS/HR
OUTLET CARBON LOADING = 0.18375 LBS ACID/LB CARBON
HEIGHT OF CARBON/STAGE = 9.00 INCHES
DIAMETER OF VESSEL = 18.0 INCHES
CARBON USED = 0.
TOTAL GAS FLOW RATE 18969. SCFH
INLET SO2 CONCENTRATION = 2000. PPM
INLET NO CONCENTRATION = 150. PPM
INLET O2 VOLUME FRACTION = 0.0460
INLET H2O VOLUME FRACTION = 0.1300
OUTLET SO2 CONCENTRATION = 50. PPM

TEMPERATURE = 200.0 DEG. F

STAGE	SO2 CONCENTRATION PPM	ACID LOADING LBS ACID/LB CARBON
1	2000.	0.1837
2	1504.	0.1369
3	970.	0.0866
4	457.	0.0382
5	74.	0.0020
0.10	50.0000	0.0

TOTAL CARBON REQUIRED = 45.87 INCHES
TOTAL STAGES REQUIRED ASSUMING 9.00 INCHES CARBON/STAGE = 5.10

SPACE VELOCITY = 2808. 1/HR

PRESSURE DROP ACROSS CARBON = 22.94 INCHES H2O
PRESSURE DROP ACROSS PLATES = 11.47 INCHES H2O
TOTAL PRESSURE DROP ACROSS STAGES = 34.40 INCHES H2O

RATE EXPRESSION USED IN DESIGN CALCULATIONS

RATEC(I)=COEFF * (1-X(I)/XS)**A * (YSO2**B) * (YO2**C) * (YH2O**D)
WHERE COEFF=K * EXP(-E/R*(1/(T+460)))

T= 200. XS= 0.38 YO2= 0.046 YH2O= 0.130
-E/R= 5520. A= 1.000 B= 0.400 C= 0.630 D= 0.730
K=0.000159

SO2 SORBER DESIGN

RUN NUMBER TEST-54 DATE 7 27 71

TOTAL CARBON RATE =111.400 LBS/HR
OUTLET CARBON LOADING = 0.18375 LBS ACID/LB CARBON
HEIGHT OF CARBON/STAGE = 9.00 INCHES
DIAMETER OF VESSEL = 18.0 INCHES
CARBON USED = 0.
TOTAL GAS FLOW RATE = 18969. SCFH
INLET SO2 CONCENTRATION = 4000. PPM
INLET NO CONCENTRATION = 150. PPM
INLET O2 VOLUME FRACTION = 0.0460
INLET H2O VOLUME FRACTION = 0.1300
OUTLET SO2 CONCENTRATION = 50. PPM

TEMPERATURE = 200.0 DEG. F

STAGE	SO2 CONCENTRATION PPM	ACID LOADING LBS ACID/LB CARBON
1	4000.	0.1837
2	3332.	0.1527
3	2621.	0.1195
4	1893.	0.0856
5	1188.	0.0528
6	567.	0.0239
7	119.	0.0030
0.25	50.0000	0.0

TOTAL CARBON REQUIRED = 65.21 INCHES
TOTAL STAGES REQUIRED ASSUMING 9.00 INCHES CARBON/STAGE = 7.25

SPACE VELOCITY = 1975. 1/HR

PRESSURE DROP ACROSS CARBON = 32.61 INCHES H2O
PRESSURE DROP ACROSS PLATES = 16.30 INCHES H2O
TOTAL PRESSURE DROP ACROSS STAGES = 48.91 INCHES H2O

RATE EXPRESSION USED IN DESIGN CALCULATIONS

RATEC(I)=COEFF * (1-X(I)/XS)**A * (YSO2**B) * (YO2**C) * (YH2O**D)
WHERE COEFF=K * EXP(-E/R*(1/(T+460)))

T= 200. XS= 0.38 YO2= 0.046 YH2O= 0.130
-E/R= 5520. A= 1.000 B= 0.400 C= 0.630 D= 0.730
K=0.000159

APPENDIX A-9-8

EFFECT OF THE OUTLET H_2SO_4 LOADING ON CARBON ON THE TOTAL CARBON BED DEPTH REQUIRED TO REMOVE 90% OF AN INLET SO_2 CONCENTRATION OF 2000 PPM

SO2 SORBER DESIGN

RUN NUMBER TEST-7 DATE 7 27 71

TOTAL CARBON RATE = 50.640 LBS/HR
OUTLET CARBON LOADING = 0.18375 LBS ACID/LB CARBON
HEIGHT OF CARBON/STAGE = 9.00 INCHES
DIAMETER OF VESSEL = 18.0 INCHES
CARBON USED = 0.
TOTAL GAS FLOW RATE = 18969. SCFH
INLET SO2 CONCENTRATION = 2000. PPM
INLET NO CONCENTRATION = 150. PPM
INLET O2 VOLUME FRACTION = 0.0460
INLET H2O VOLUME FRACTION = 0.1300
OUTLET SO2 CONCENTRATION = 200. PPM

TEMPERATURE = 200.0 DEG. F

STAGE	SO2 CONCENTRATION PPM	ACID LOADING LBS ACID/LB CARBON
1	2000.	0.1837
2	1504.	0.1329
3	962.	0.0774
4	438.	0.0237
0.53	200.0001	0.0

TOTAL CARBON REQUIRED = 40.76 INCHES
TOTAL STAGES REQUIRED ASSUMING 9.00 INCHES CARBON/STAGE = 4.53

SPACE VELOCITY = 3161. 1/HR

PRESSURE DROP ACROSS CARBON = 20.38 INCHES H2O
PRESSURE DROP ACROSS PLATES = 10.19 INCHES H2O
TOTAL PRESSURE DROP ACROSS STAGES = 30.57 INCHES H2O

SO2 SORBER DESIGN

RUN NUMBER TEST-16 DATE 7 27 71

TOTAL CARBON RATE = 50.640 LBS/HR
OUTLET CARBON LOADING = 0.09187 LBS ACID/LB CARBON
HEIGHT OF CARBON/STAGE = 9.00 INCHES
DIAMETER OF VESSEL = 18.0 INCHES
CARBON USED = 0.
TOTAL GAS FLOW RATE = 18969. SCFH
INLET SO2 CONCENTRATION = 2000. PPM
INLET NO CONCENTRATION = 150. PPM
INLET O2 VOLUME FRACTION = 0.0460
INLET H2O VOLUME FRACTION = 0.1300
OUTLET SO2 CONCENTRATION = 200. PPM

TEMPERATURE = 200.0 DEG. F

STAGE	SO2 CONCENTRATION PPM	ACID LOADING LBS ACID/LB CARBON
1	2000.	0.0919
2	1291.	0.0192
3	588.	0.0
0.75	200.0001	0.0

TOTAL CARBON REQUIRED = 33.76 INCHES
TOTAL STAGES REQUIRED ASSUMING 9.00 INCHES CARBON/STAGE = 3.75

SPACE VELOCITY = 3816. 1/HR

PRESSURE DROP ACROSS CARBON = 16.88 INCHES H2O
PRESSURE DROP ACROSS PLATES = 8.44 INCHES H2O
TOTAL PRESSURE DROP ACROSS STAGES = 25.32 INCHES H2O

SO2 SORBER DESIGN

RUN NUMBER TEST-17 DATE 7 27 71

TOTAL CARBON RATE = 50.640 LBS/HR
OUTLET CARBON LOADING = 0.27562 LBS ACID/LB CARBON
HEIGHT OF CARBON/STAGE = 9.00 INCHES
DIAMETER OF VESSEL = 18.0 INCHES
CARBON USED = 0.
TOTAL GAS FLOW RATE = 18969. SCFH
INLET SO2 CONCENTRATION = 2000. PPM
INLET NO CONCENTRATION = 150. PPM
INLET O2 VOLUME FRACTION = 0.0460
INLET H2O VOLUME FRACTION = 0.1300
OUTLET SO2 CONCENTRATION = 200. PPM

TEMPERATURE = 200.0 DEG. F

STAGE	SO2 CONCENTRATION PPM	ACID LOADING LBS ACID/LB CARBON
1	2000.	0.2756
2	1729.	0.2479
3	1409.	0.2151
4	1047.	0.1780
5	665.	0.1388
6	304.	0.1019
0.32	200.0001	0.0912

TOTAL CARBON REQUIRED = 56.90 INCHES
TOTAL STAGES REQUIRED ASSUMING 9.00 INCHES CARBON/STAGE = 6.32

SPACE VELOCITY = 2264. 1/HR

PRESSURE DROP ACROSS CARBON = 28.45 INCHES H2O
PRESSURE DROP ACROSS PLATES = 14.22 INCHES H2O
TOTAL PRESSURE DROP ACROSS STAGES = 42.67 INCHES H2O

SO2 SORBER DESIGN

RUN NUMBER TEST-18 DATE 7 27 71

TOTAL CARBON RATE = 50.640 LBS/HR
OUTLET CARBON LOADING = 0.36750 LBS ACID/LB CARBON
HEIGHT OF CARBON/STAGE = 9.00 INCHES
DIAMETER OF VESSEL = 18.0 INCHES
CARBON USED = 0.
TOTAL GAS FLOW RATE = 18969. SCFH
INLET SO2 CONCENTRATION = 2000. PPM
INLET NO CONCENTRATION = 150. PPM
INLET O2 VOLUME FRACTION = 0.0460
INLET H2O VOLUME FRACTION = 0.1300
OUTLET SO2 CONCENTRATION = 200. PPM

TEMPERATURE = 200.0 DEG. F

STAGE	SO2 CONCENTRATION PPM	ACID LOADING LBS ACID/LB CARBON
1	2000.	0.3675
2	1967.	0.3641
3	1925.	0.3598
4	1872.	0.3544
5	1806.	0.3476
6	1723.	0.3391
7	1622.	0.3287
8	1498.	0.3160
9	1348.	0.3008
10	1173.	0.2827
11	970.	0.2620
12	746.	0.2390
13	510.	0.2148
14	281.	0.1914
0.38	200.0001	0.1831

TOTAL CARBON REQUIRED = 129.38 INCHES
TOTAL STAGES REQUIRED ASSUMING 9.00 INCHES CARBON/STAGE =14.38

SPACE VELOCITY = 996. 1/HR

PRESSURE DROP ACROSS CARBON = 64.69 INCHES H2O
PRESSURE DROP ACROSS PLATES = 32.34 INCHES H2O
TOTAL PRESSURE DROP ACROSS STAGES = 97.03 INCHES H2O

APPENDIX A-9-9

EFFECT OF THE TEMPERATURE ON THE TOTAL CARBON BED DEPTH REQUIRED TO REMOVE 90% OF AN INLET SO_2 CONCENTRATION OF 2000 PPM

SO2 SORBER DESIGN

RUN NUMBER TEST-7 DATE 7 27 71

TOTAL CARBON RATE = 50.640 LBS/HR
OUTLET CARBON LOADING = 0.18375 LBS ACID/LB CARBON
HEIGHT OF CARBON/STAGE = 9.00 INCHES
DIAMETER OF VESSEL = 18.0 INCHES
CARBON USED = 0.
TOTAL GAS FLOW RATE = 18969. SCFH
INLET SO2 CONCENTRATION = 2000. PPM
INLET NO CONCENTRATION = 150. PPM
INLET O2 VOLUME FRACTION = 0.0460
INLET H2O VOLUME FRACTION = 0.1300
OUTLET SO2 CONCENTRATION = 200. PPM

TEMPERATURE = 200.0 DEG. F

STAGE	SO2 CONCENTRATION PPM	ACID LOADING LBS ACID/LB CARBON
1	2000.	0.1837
2	1504.	0.1329
3	962.	0.0774
4	438.	0.0237
0.53	200.0001	0.0

TOTAL CARBON REQUIRED = 40.76 INCHES
TOTAL STAGES REQUIRED ASSUMING 9.00 INCHES CARBON/STAGE = 4.53

SPACE VELOCITY = 3161. 1/HR

PRESSURE DROP ACROSS CARBON = 20.38 INCHES H2O
PRESSURE DROP ACROSS PLATES = 10.19 INCHES H2O
TOTAL PRESSURE DROP ACROSS STAGES = 30.57 INCHES H2O

SO2 SORBER DESIGN

RUN NUMBER TEST-22 DATE 7 27 71

TOTAL CARBON RATE = 48.790 LBS/HR
OUTLET CARBON LOADING = 0.18375 LBS ACID/LB CARBON
HEIGHT OF CARBON/STAGE = 9.00 INCHES
DIAMETER OF VESSEL = 18.0 INCHES
CARBON USED = 0.
TOTAL GAS FLOW RATE = 18276. SCFH
INLET SO2 CONCENTRATION = 2000. PPM
INLET NO CONCENTRATION = 150. PPM
INLET O2 VOLUME FRACTION = 0.0460
INLET H2O VOLUME FRACTION = 0.1300
OUTLET SO2 CONCENTRATION = 200. PPM

TEMPERATURE = 225.0 DEG. F

STAGE	SO2 CONCENTRATION PPM	ACID LOADING LBS ACID/LB CARBON
1	2000.	0.1837
2	1615.	0.1443
3	1198.	0.1016
4	771.	0.0579
5	376.	0.0174
0.52	200.0001	0.0

TOTAL CARBON REQUIRED = 49.69 INCHES
TOTAL STAGES REQUIRED ASSUMING 9.00 INCHES CARBON/STAGE = 5.52

SPACE VELOCITY = 2498. 1/HR

PRESSURE DROP ACROSS CARBON = 24.84 INCHES H2O
PRESSURE DROP ACROSS PLATES = 12.42 INCHES H2O
TOTAL PRESSURE DROP ACROSS STAGES = 37.27 INCHES H2O

SO2 SORBER DESIGN

RUN NUMBER TEST-23 DATE 7 27 71

TOTAL CARBON RATE = 47.070 LBS/HR
OUTLET CARBON LOADING = 0.18375 LBS ACID/LB CARBON
HEIGHT OF CARBON/STAGE = 9.00 INCHES
DIAMETER OF VESSEL = 18.0 INCHES
CARBON USED = 0.
TOTAL GAS FLOW RATE = 17633. SCFH
INLET SO2 CONCENTRATION = 2000. PPM
INLET NO CONCENTRATION = 150. PPM
INLET O2 VOLUME FRACTION = 0.0460
INLET H2O VOLUME FRACTION = 0.1300
OUTLET SO2 CONCENTRATION = 200. PPM

TEMPERATURE = 250.0 DEG. F

STAGE	SO2 CONCENTRATION PPM	ACID LOADING LBS ACID/LB CARBON
1	2000.	0.1837
2	1697.	0.1527
3	1371.	0.1193
4	1033.	0.0846
5	697.	0.0503
6	387.	0.0185
0.71	200.0001	0.0

TOTAL CARBON REQUIRED = 60.37 INCHES
TOTAL STAGES REQUIRED ASSUMING 9.00 INCHES CARBON/STAGE = 6.71

SPACE VELOCITY = 1984. 1/HR

PRESSURE DROP ACROSS CARBON = 30.18 INCHES H2O
PRESSURE DROP ACROSS PLATES = 15.09 INCHES H2O
TOTAL PRESSURE DROP ACROSS STAGES = 45.27 INCHES H2O

SO2 SORBER DESIGN

RUN NUMBER TEST-24 DATE 7 27 71

TOTAL CARBON RATE = 45.470 LBS/HR
OUTLET CARBON LOADING = 0.18375 LBS ACID/LB CARBON
HEIGHT OF CARBON/STAGE = 9.00 INCHES
DIAMETER OF VESSEL = 18.0 INCHES
CARBON USED = 0.
TOTAL GAS FLOW RATE = 17033. SCFH
INLET SO2 CONCENTRATION = 2000. PPM
INLET NO CONCENTRATION = 150. PPM
INLET O2 VOLUME FRACTION = 0.0460
INLET H2O VOLUME FRACTION = 0.1300
OUTLET SO2 CONCENTRATION = 200. PPM

TEMPERATURE = 275.0 DEG. F

STAGE	SO2 CONCENTRATION PPM	ACID LOADING LBS ACID/LB CARBON
1	2000.	0.1837
2	1758.	0.1589
3	1500.	0.1325
4	1231.	0.1049
5	957.	0.0769
6	688.	0.0494
7	437.	0.0236
8	220.	0.0014
0.10	200.0001	0.0

TOTAL CARBON REQUIRED = 72.94 INCHES
TOTAL STAGES REQUIRED ASSUMING 9.00 INCHES CARBON/STAGE = 8.10

SPACE VELOCITY = 1586. 1/HR

PRESSURE DROP ACROSS CARBON = 36.47 INCHES H2O
PRESSURE DROP ACROSS PLATES = 18.23 INCHES H2O
TOTAL PRESSURE DROP ACROSS STAGES = 54.70 INCHES H2O

SO2 SORBER DESIGN

RUN NUMBER TEST-25 DATE 7 27 71

TOTAL CARBON RATE = 43.980 LBS/HR
OUTLET CARBON LOADING = 0.18375 LBS ACID/LB CARBON
HEIGHT OF CARBON/STAGE = 9.00 INCHES
DIAMETER OF VESSEL = 18.0 INCHES
CARBON USED = 0.
TOTAL GAS FLOW RATE = 16473. SCFH
INLET SO2 CONCENTRATION = 2000. PPM
INLET NO CONCENTRATION = 150. PPM
INLET O2 VOLUME FRACTION = 0.0460
INLET H2O VOLUME FRACTION = 0.1300
OUTLET SO2 CONCENTRATION = 200. PPM

TEMPERATURE = 300.0 DEG. F

STAGE	SO2 CONCENTRATION PPM	ACID LOADING LBS ACID/LB CARBON
1	2000.	0.1837
2	1803.	0.1636
3	1596.	0.1423
4	1380.	0.1202
5	1158.	0.0975
6	935.	0.0747
7	716.	0.0522
8	508.	0.0309
9	319.	0.0115
0.72	200.0001	0.0

TOTAL CARBON REQUIRED = 87.44 INCHES
TOTAL STAGES REQUIRED ASSUMING 9.00 INCHES CARBON/STAGE = 9.72

SPACE VELOCITY = 1279. 1/HR

PRESSURE DROP ACROSS CARBON = 43.72 INCHES H2O
PRESSURE DROP ACROSS PLATES = 21.86 INCHES H2O
TOTAL PRESSURE DROP ACROSS STAGES = 65.58 INCHES H2O

APPENDIX A-10

REACTION RATE STUDIES FOR SULFUR GENERATION IN 1 INCH DIAMETER FIXED BED

RATE OF SULFUR GENERATION 3 10 71
BENCH SCALE

SG-22

SPACE VELOCITY = 0.100739E 04 /HR
INERT GAS FLOW RATE = 233.00 SCC/MIN
WEIGHT OF CARBON, UNLOADED = 11.900 GMS LOADED = 15.00 GMS

INLET PERCENT H2S = 30.000
INLET MOLAR H2S CONCENTRATION = 0.428571 MOLES H2S/MOLE INERT GAS
INLET SULFURIC ACID LOADING = 0.206000 GMS H2SO4/GM CARBON.

FINAL OUTLET PERCENT SULFUR LOADING ON CARBON = 18.040
FINAL OUTLET SULFUR LOADING ON CARBON = 0.227 GMS S/GM CARBON
INITIAL TEMPERATURE = 270.00 F
MAXIMUM TEMPERATURE = 355.00 F
FINAL TEMPERATURE = 300.00 F

TIME	PERCENT H2S	PERCENT SO2	PERCENT CO2	MOLAR CONC H2S	H2SO4 LOADING GMS ACID/GM C	RATE ACID DECOMP. GM ACID/GM C-MIN.
0.0	0.000000E 00	0.000000E 00	0.000000E 00	0.000000E 00	0.206000E 00	0.000000E 00
2.0	0.000000E 00	0.000000E 00	0.000000E 00	0.000000E 00	0.181520E 00	-0.122545E-01
4.0	0.000000E 00	0.000000E 00	0.000000E 00	0.000000E 00	0.157061E 00	-0.122545E-01
7.0	0.260000E 01	0.000000E 00	0.000000E 00	0.266940E-01	0.121500E 00	-0.114725E-01
10.0	0.640000E 01	0.000000E 00	0.000000E 00	0.683760E-01	0.888680E-01	-0.102626E-01
12.0	0.760000E 01	0.000000E 00	0.000000E 00	0.822510E-01	0.696985E-01	-0.998654E-02
14.0	0.128000E 02	0.000000E 00	0.000000E 00	0.146789E 00	0.507681E-01	-0.804415E-02
16.0	0.176000E 02	0.000000E 00	0.000000E 00	0.213592E 00	0.365869E-01	-0.613709E-02
18.0	0.200000E 02	0.000000E 00	0.000000E 00	0.250000E 00	0.253520E-01	-0.509774E-02
20.0	0.222000E 02	0.000000E 00	0.000000E 00	0.285347E 00	0.161656E-01	-0.408868E-02
22.0	0.236000E 02	0.000000E 00	0.000000E 00	0.308900E 00	0.866067E-02	-0.341527E-02
24.0	0.240000E 02	0.000000E 00	0.000000E 00	0.315769E 00	0.202475E-02	-0.321963E-02
26.0	0.244000E 02	0.000000E 00	0.000000E 00	0.322751E 00	-0.421576E-02	-0.302088E-02
28.0	0.256000E 02	0.000000E 00	0.000000E 00	0.344086E 00	-0.964849E-02	-0.241189E-02
30.0	0.264000E 02	0.000000E 00	0.000000E 00	0.358695E 00	-0.140551E-01	-0.199476E-02
32.0	0.270000E 02	0.000000E 00	0.000000E 00	0.369863E 00	-0.177258E-01	-0.167597E-02
34.0	0.274000E 02	0.000000E 00	0.000000E 00	0.377410E 00	-0.208623E-01	-0.146054E-02
36.0	0.278000E 02	0.000000E 00	0.000000E 00	0.385041E 00	-0.235695E-01	-0.124266E-02
38.0	0.274000E 02	0.000000E 00	0.000000E 00	0.377410E 00	-0.262666E-01	-0.146054E-02
40.0	0.278000E 02	0.000000E 00	0.000000E 00	0.385041E 00	-0.289718E-01	-0.124266E-02
42.0	0.274000E 02	0.000000E 00	0.000000E 00	0.377410E 00	-0.316790E-01	-0.146054E-02
44.0	0.270000E 02	0.000000E 00	0.000000E 00	0.369863E 00	-0.348115E-01	-0.167597E-02
46.0	0.270000E 02	0.000000E 00	0.000000E 00	0.369863E 00	-0.381634E-01	-0.167597E-02
48.0	0.256000E 02	0.000000E 00	0.000000E 00	0.344086E 00	-0.422512E-01	-0.241189E-02
50.0	0.256000E 02	0.000000E 00	0.000000E 00	0.344086E 00	-0.470749E-01	-0.241189E-02
52.0	0.260000E 02	0.000000E 00	0.000000E 00	0.351351E 00	-0.516921E-01	-0.220449E-02
54.0	0.270000E 02	0.000000E 00	0.000000E 00	0.369863E 00	-0.555716E-01	-0.167597E-02
56.0	0.270000E 02	0.000000E 00	0.000000E 00	0.369863E 00	-0.592235E-01	-0.167597E-02
58.0	0.270000E 02	0.000000E 00	0.000000E 00	0.369863E 00	-0.622754E-01	-0.167597E-02
60.0	0.270000E 02	0.000000E 00	0.000000E 00	0.369863E 00	-0.656274E-01	-0.167597E-02
62.0	0.274000E 02	0.000000E 00	0.000000E 00	0.377410E 00	-0.687638E-01	-0.146054E-02
64.0	0.274000E 02	0.000000E 00	0.000000E 00	0.377410E 00	-0.716649E-01	-0.146054E-02
66.0	0.274000E 02	0.000000E 00	0.000000E 00	0.377410E 00	-0.746059E-01	-0.146054E-02
68.0	0.274000E 02	0.000000E 00	0.000000E 00	0.377410E 00	-0.775269E-01	-0.146054E-02
70.0	0.274000E 02	0.000000E 00	0.000000E 00	0.377410E 00	-0.804479E-01	-0.146054E-02
72.0	0.274000E 02	0.000000E 00	0.000000E 00	0.377410E 00	-0.833689E-01	-0.146054E-02
75.0	0.274000E 02	0.000000E 00	0.000000E 00	0.377410E 00	-0.877505E-01	-0.146054E-02

ACID LOADING = 0.205999E-01 AT 0.190345E 02 MINUTES

RATE OF ACID DECOMPOSITION = -0.457576E-02 AT 0.190345E 02 MINUTES
AVERAGE RATE OF ACID DECOMPOSITION UP TO 90 PERCENT ACID UTILIZATION = -0.931299E-02

RATE OF SULFUR GENERATION 3 16 71
BENCH SCALE

SG-25

SPACE VELOCITY = 0.116437E 04 /HR
INERT GAS FLOW RATE = 580.00 SCC/MIN
WEIGHT OF CARBON, UNLOADED = 25.600 GMS LOADED = 32.20 GMS

INLET PERCENT H2S = 30.000
INLET MOLAR H2S CONCENTRATION = 0.428571 MOLES H2S/MOLE INERT GAS
INLET SULFURIC ACID LOADING = 0.206000 GMS H2SO4/GM CARBON,

FINAL OUTLET PERCENT SULFUR LOADING ON CARBON = 15.600
FINAL OUTLET SULFUR LOADING ON CARBON = 0.195 GMS S/GM CARBON
INITIAL TEMPERATURE = 270.00 F
MAXIMUM TEMPERATURE = 338.00 F
FINAL TEMPERATURE = 318.00 F

TIME	PERCENT H2S	PERCENT SO2	PERCENT CO2	MOLAR CONC H2S	H2SO4 LOADING GMS ACID/GM C	RATE ACID DECOMP. GM ACID/GM C-MIN.
0.0	0.000000E 00	0.000000E 00	0.000000E 00	0.000000E 00	0.206000E 00	0.000000E 00
2.0	0.000000E 00	0.000000E 00	0.000000E 00	0.000000E 00	0.177686E 00	-0.141567E-01
4.0	0.000000E 00	0.000000E 00	0.000000E 00	0.000000E 00	0.149372E 00	-0.141569E-01
6.0	0.240000E 01	0.000000E 00	0.000000E 00	0.245901E-01	0.121870E 00	-0.133446E-01
8.0	0.760000E 01	0.000000E 00	0.000000E 00	0.822510E-01	0.970861E-01	-0.114597E-01
10.0	0.148000E 02	0.000000E 00	0.000000E 00	0.173708E 00	0.772273E-01	-0.841682E-02
12.0	0.206000E 02	0.000000E 00	0.000000E 00	0.259445E 00	0.632218E-01	-0.558567E-02
14.0	0.266000E 02	0.000000E 00	0.000000E 00	0.362397E 00	0.554492E-01	-0.216996E-02
16.0	0.296000E 02	0.000000E 00	0.000000E 00	0.420454E 00	0.529952E-01	-0.268124E-03
18.0	0.300000E 02	0.000000E 00	0.000000E 00	0.428571E 00	0.527270E-01	0.000000E 00

AVERAGE Rate of Acid Decomposition = 0.773 E-02

RATE OF SULFUR GENERATION 3 11 71
BENCH SCALE

SG-24

SPACE VELOCITY = 0.992250E 03 /HR
INERT GAS FLOW RATE = 309.00 SCC/MIN
WEIGHT OF CARBON, UNLOADED = 16.000 GMS LOADED = 20.00 GMS

INLET PERCENT H2S = 30.000
INLET MOLAR H2S CONCENTRATION = 0.428571 MOLES H2S/MOLE INERT GAS
INLET SULFURIC ACID LOADING = 0.206000 GMS H2SO4/GM CARBON,

FINAL OUTLET PERCENT SULFUR LOADING ON CARBON = 18.400
FINAL OUTLET SULFUR LOADING ON CARBON = 0.229 GMS S/GM CARBON
INITIAL TEMPERATURE = 270.00 F
MAXIMUM TEMPERATURE = 321.00 F
FINAL TEMPERATURE = 303.00 F

TIME	PERCENT H2S	PERCENT SO2	PERCENT CO2	MOLAR CONC H2S	H2SO4 LOADING GMS ACID/GM C	RATE ACID DECOMP. GM ACID/GM C-MIN.
0.0	0.000000E 00	0.000000E 00	0.000000E 00	0.000000E 00	0.206000E 00	0.000000E 00
2.0	0.000000E 00	0.000000E 00	0.000000E 00	0.000000E 00	0.181864E 00	-0.120675E-01
4.0	0.160000E 01	0.000000E 00	0.000000E 00	0.162601E-01	0.158187E 00	-0.116097E-01
6.0	0.440000E 01	0.000000E 00	0.000000E 00	0.460251E-01	0.135806E 00	-0.107715E-01
8.0	0.820000E 01	0.000000E 00	0.000000E 00	0.893246E-01	0.115482E 00	-0.955236E-02
10.0	0.114000E 02	0.000000E 00	0.000000E 00	0.128668E 00	0.974853E-01	-0.844456E-02
12.0	0.154000E 02	0.000000E 00	0.000000E 00	0.182033E 00	0.820988E-01	-0.694195E-02
14.0	0.186000E 02	0.000000E 00	0.000000E 00	0.228501E 00	0.695234E-01	-0.563350E-02
16.0	0.196000E 02	0.000000E 00	0.000000E 00	0.243781E 00	0.586866E-01	-0.520225E-02
19.0	0.202000E 02	0.000000E 00	0.000000E 00	0.253132E 00	0.434718E-01	-0.493993E-02
21.0	0.212000E 02	0.000000E 00	0.000000E 00	0.269035E 00	0.340397E-01	-0.449215E-02
23.0	0.234000E 02	0.000000E 00	0.000000E 00	0.305483E 00	0.260817E-01	-0.346587E-02
26.0	0.256000E 02	0.000000E 00	0.000000E 00	0.344086E 00	0.173145E-01	-0.237890E-02
28.0	0.268000E 02	0.000000E 00	0.000000E 00	0.366120E 00	0.131771E-01	-0.175647E-02
31.0	0.284000E 02	0.000000E 00	0.000000E 00	0.396648E 00	0.919110E-02	-0.898885E-03
35.0	0.300000E 02	0.000000E 00	0.000000E 00	0.428571E 00	0.739333E-02	0.000000E 00
37.0	0.300000E 02	0.000000E 00	0.000000E 00	0.428571E 00	0.739333E-02	0.000000E 00

ACID LOADING = 0.205999E-01 AT 0.248757E 02 MINUTES
RATE OF ACID DECOMPOSITION = -0.278624E-02 AT 0.248757E 02 MINUTES
AVERAGE RATE OF ACID DECOMPOSITION UP TO 90 PERCENT ACID UTILIZATION = -0.709168E-02

RATE OF SULFUR GENERATION 3 10 71
BENCH SCALE

SG-23

SPACE VELOCITY = 0.100654E 04 /HR
INERT GAS FLOW RATE = 155.00 SCC/MIN
WEIGHT OF CARBON, UNLOADED = 7.940 GMS LOADED = 10.00 GMS

INLET PERCENT H2S = 30.000
INLET MOLAR H2S CONCENTRATION = 0.428571 MOLES H2S/MOLE INERT GAS
INLET SULFURIC ACID LOADING = 0.206000 GMS H2SO4/GM CARBON,

FINAL OUTLET PERCENT SULFUR LOADING ON CARBON = 20.720
FINAL OUTLET SULFUR LOADING ON CARBON = 0.260 GMS S/GM CARBON
INITIAL TEMPERATURE = 270.00 F
MAXIMUM TEMPERATURE = 330.00 F
FINAL TEMPERATURE = 320.00 F

TIME	PERCENT H2S	PERCENT SO2	PERCENT CO2	MOLAR CONC H2S	H2SO4 LOADING GMS ACID/GM C	RATE ACID DECOMP. GM ACID/GM C-MIN.
0.0	0.000000E 00	0.000000E 00	0.000000E 00	0.000000E 00	0.206000E 00	0.000000E 00
2.0	0.400000E 00	0.000000E 00	0.000000E 00	0.401606E-02	0.181718E 00	-0.120837E-01
4.0	0.184000E 02	0.000000E 00	0.000000E 00	0.225490E 00	0.163854E 00	-0.578014E-02
8.0	0.192000E 02	0.000000E 00	0.000000E 00	0.237623E 00	0.141424E 00	-0.543479E-02
10.0	0.192000E 02	0.000000E 00	0.000000E 00	0.237623E 00	0.130554E 00	-0.543479E-02
12.0	0.192000E 02	0.000000E 00	0.000000E 00	0.237623E 00	0.119685E 00	-0.543479E-02
14.0	0.184000E 02	0.000000E 00	0.000000E 00	0.225490E 00	0.108470E 00	-0.578014E-02
16.0	0.174000E 02	0.000000E 00	0.000000E 00	0.210653E 00	0.964575E-01	-0.620242E-02
18.0	0.180000E 02	0.000000E 00	0.000000E 00	0.219512E 00	0.843348E-01	-0.595028E-02
20.0	0.188000E 02	0.000000E 00	0.000000E 00	0.231527E 00	0.727762E-01	-0.566031E-02
22.0	0.196000E 02	0.000000E 00	0.000000E 00	0.243781E 00	0.619053E-01	-0.525954E-02
24.0	0.214000E 02	0.000000E 00	0.000000E 00	0.272264E 00	0.522000E-01	-0.444889E-02
26.0	0.218000E 02	0.000000E 00	0.000000E 00	0.278772E 00	0.434675E-01	-0.426361E-02
28.0	0.218000E 02	0.000000E 00	0.000000E 00	0.278772E 00	0.349603E-01	-0.426361E-02
30.0	0.204000E 02	0.000000E 00	0.000000E 00	0.256281E 00	0.257529E-01	-0.490579E-02
32.0	0.214000E 02	0.000000E 00	0.000000E 00	0.272264E 00	0.164403E-01	-0.444889E-02
34.0	0.218000E 02	0.000000E 00	0.000000E 00	0.278772E 00	0.772790E-02	-0.426361E-02
36.0	0.230000E 02	0.000000E 00	0.000000E 00	0.298701E 00	-0.232104E-03	-0.369039E-02
38.0	0.256000E 02	0.000000E 00	0.000000E 00	0.344086E 00	-0.633314E-02	-0.240464E-02
40.0	0.236000E 02	0.000000E 00	0.000000E 00	0.308900E 00	-0.121438E-01	-0.340009E-02
44.0	0.236000E 02	0.000000E 00	0.000000E 00	0.308900E 00	-0.257662E-01	-0.340009E-02
46.0	0.238000E 02	0.000000E 00	0.000000E 00	0.312335E 00	-0.324827E-01	-0.330031E-02
50.0	0.248000E 02	0.000000E 00	0.000000E 00	0.329787E 00	-0.447225E-01	-0.281161E-02
53.0	0.252000E 02	0.000000E 00	0.000000E 00	0.336898E 00	-0.528596E-01	-0.260921E-02
56.0	0.260000E 02	0.000000E 00	0.000000E 00	0.351351E 00	-0.600644E-01	-0.219789E-02
59.0	0.270000E 02	0.000000E 00	0.000000E 00	0.369863E 00	-0.658676E-01	-0.167097E-02
62.0	0.274000E 02	0.000000E 00	0.000000E 00	0.377410E 00	-0.705583E-01	-0.145619E-02
65.0	0.274000E 02	0.000000E 00	0.000000E 00	0.377410E 00	-0.749268E-01	-0.145619E-02

ACID LOADING = 0.205999E-01 AT 0.311104E 02 MINUTES
RATE OF ACID DECOMPOSITION = -0.465116E-02 AT 0.311104E 02 MINUTES
AVERAGE RATE OF ACID DECOMPOSITION UP TO 90 PERCENT ACID UTILIZATION = -0.571293E-02

RATE OF SULFUR GENERATION 3 9 71
BENCH SCALE

SG-21

SPACE VELOCITY = 0.104598E 04 /HR
INERT GAS FLOW RATE = 179.00 SCC/MIN
WEIGHT OF CARBON, UNLOADED = 6.350 GMS LOADED = 8.00 GMS

INLET PERCENT H2S = 30.000
INLET MOLAR H2S CONCENTRATION = 0.428571 MOLES H2S/MOLE INERT GAS
INLET SULFURIC ACID LOADING = 0.206000 GMS H2SO4/GM CARBON.

FINAL OUTLET PERCENT SULFUR LOADING ON CARBON = 20.840
FINAL OUTLET SULFUR LOADING ON CARBON = 0.262 GMS S/GM CARBON
INITIAL TEMPERATURE = 270.00 F
MAXIMUM TEMPERATURE = 320.00 F
FINAL TEMPERATURE = 300.00 F

TIME	PERCENT H2S	PERCENT SO2	PERCENT CO2	MOLAR CONC H2S	H2SO4 LOADING GMS ACID/GM C	RATE ACID DECOMP. GM ACID/GM C-MIN.
0.0	0.000000E 00	0.000000E 00	0.000000E 00	0.000000E 00	0.206000E 00	0.000000E 00
2.0	0.140000E 02	0.000000E 00	0.000000E 00	0.162790E 00	0.185433E 00	-0.787221E-02
4.0	0.194000E 02	0.000000E 00	0.000000E 00	0.240694E 00	0.171996E 00	-0.556479E-02
6.0	0.206000E 02	0.000000E 00	0.000000E 00	0.259445E 00	0.161422E 00	-0.500936E-02
8.5	0.210000E 02	0.000000E 00	0.000000E 00	0.265822E 00	0.149135E 00	-0.482048E-02
11.0	0.224000E 02	0.000000E 00	0.000000E 00	0.288659E 00	0.137929E 00	-0.414407E-02
13.0	0.216000E 02	0.000000E 00	0.000000E 00	0.275510E 00	0.129252E 00	-0.453352E-02
15.0	0.202000E 02	0.000000E 00	0.000000E 00	0.253132E 00	0.119522E 00	-0.519638E-02
17.0	0.198000E 02	0.000000E 00	0.000000E 00	0.246882E 00	0.108944E 00	-0.538147E-02
19.0	0.202000E 02	0.000000E 00	0.000000E 00	0.253132E 00	0.983664E-01	-0.519638E-02
21.0	0.220000E 02	0.000000E 00	0.000000E 00	0.282051E 00	0.868302E-01	-0.439981E-02
23.0	0.228000E 02	0.000000E 00	0.000000E 00	0.295336E 00	0.805441E-01	-0.394650E-02
25.0	0.236000E 02	0.000000E 00	0.000000E 00	0.308900E 00	0.730532E-01	-0.354452E-02
27.0	0.244000E 02	0.000000E 00	0.000000E 00	0.322751E 00	0.663743E-01	-0.319430E-02
29.0	0.248000E 02	0.000000E 00	0.000000E 00	0.329787E 00	0.603141E-01	-0.292594E-02
31.0	0.248000E 02	0.000000E 00	0.000000E 00	0.329787E 00	0.544623E-01	-0.292594E-02
33.0	0.254000E 02	0.000000E 00	0.000000E 00	0.340482E 00	0.489272E-01	-0.260912E-02
35.0	0.258000E 02	0.000000E 00	0.000000E 00	0.347708E 00	0.439230E-01	-0.239000E-02
37.0	0.262000E 02	0.000000E 00	0.000000E 00	0.355013E 00	0.393492E-01	-0.217874E-02
39.0	0.262000E 02	0.000000E 00	0.000000E 00	0.355013E 00	0.349917E-01	-0.217874E-02
41.0	0.262000E 02	0.000000E 00	0.000000E 00	0.355013E 00	0.306343E-01	-0.217874E-02
43.0	0.270000E 02	0.000000E 00	0.000000E 00	0.369863E 00	0.267197E-01	-0.175889E-02
45.0	0.270000E 02	0.000000E 00	0.000000E 00	0.369863E 00	0.232369E-01	-0.175889E-02
47.0	0.274000E 02	0.000000E 00	0.000000E 00	0.377410E 00	0.199846E-01	-0.151934E-02
49.0	0.274000E 02	0.000000E 00	0.000000E 00	0.377410E 00	0.169539E-01	-0.151934E-02
51.0	0.278000E 02	0.000000E 00	0.000000E 00	0.385041E 00	0.141492E-01	-0.128932E-02
53.0	0.282000E 02	0.000000E 00	0.000000E 00	0.392757E 00	0.117991E-01	-0.106077E-02
55.0	0.286000E 02	0.000000E 00	0.000000E 00	0.400560E 00	0.990875E-02	-0.829569E-03
57.0	0.290000E 02	0.000000E 00	0.000000E 00	0.408450E 00	0.848312E-02	-0.599560E-03
59.0	0.294000E 02	0.000000E 00	0.000000E 00	0.416430E 00	0.752795E-02	-0.359601E-03
61.0	0.300000E 02	0.000000E 00	0.000000E 00	0.428571E 00	0.716795E-02	0.000000E 00
63.0	0.300000E 02	0.000000E 00	0.000000E 00	0.428571E 00	0.716795E-02	0.000000E 00

ACID LOADING = 0.205999E-01 AT 0.466218E 02 MINUTES
RATE OF ACID DECOMPOSITION = -0.155761E-02 AT 0.466218E 02 MINUTES
AVERAGE RATE OF ACID DECOMPOSITION UP TO 90 PERCENT ACID UTILIZATION = -0.373463E-02

RATE OF SULFUR GENERATION 9 1 71
BENCH SCALE

SG-43

SPACE VELOCITY = 0.309191E 03 /HR
INERT GAS FLOW RATE = 7064.00 SCC/MIN
WEIGHT OF CARBON, UNLOADED = 1179.000 GMS LOADED = 1486.00 GMS

INLET PERCENT H2S = 29.700
INLET MOLAR H2S CONCENTRATION = 0.422475 MOLES H2S/MOLE INERT GAS
INLET SULFURIC ACID LOADING = 0.136000 GMS H2SO4/GM CARBON,

FINAL OUTLET PERCENT SULFUR LOADING ON CARBON = 21.080
FINAL OUTLET SULFUR LOADING ON CARBON = 0.266 GMS S/GM CARBON
INITIAL TEMPERATURE = 290.00 F
MAXIMUM TEMPERATURE = 340.00 F
FINAL TEMPERATURE = 320.00 F

TIME	PERCENT H2S	PERCENT SO2	PERCENT CO2	MOLAR CONC H2S	H2SO4 LOADING GMS ACID/GM C	RATE ACID DECOMP. GM ACID/GM C-MIN.
0.0	0.0	0.0	0.0	0.0	0.136000E 00	0.0
10.0	0.0	0.0	0.0	0.0	0.990941E-01	-0.369059E-02
20.0	0.0	0.0	0.0	0.0	0.621882E-01	-0.369059E-02
30.0	0.0	0.0	0.0	0.0	0.252824E-01	-0.369059E-02
40.0	0.0	0.0	0.0	0.0	-0.116235E-01	-0.369059E-02
50.0	0.0	0.0	0.0	0.0	-0.485293E-01	-0.369059E-02
60.0	0.0	0.0	0.0	0.0	-0.854352E-01	-0.369059E-02
70.0	0.270000E 02	0.0	0.0	0.369863E 00	-0.106186E 00	-0.459600E-03
80.0	0.290000E 02	0.0	0.0	0.408451E 00	-0.109097E 00	-0.122512E-03
90.0	0.294000E 02	0.0	0.0	0.416430E 00	-0.109973E 00	-0.528036E-04
100.0	0.297000E 02	0.0	0.0	0.422475E 00	-0.110237E 00	0.0
110.0	0.280000E 02	0.0	0.0	0.388889E 00	-0.111704E 00	-0.293397E-03

ACID LOADING = 0.136000E-01 AT 0.331655E 02 MINUTES
RATE OF ACID DECOMPOSITION = -0.369059E-02 AT 0.331655E 02 MINUTES
AVERAGE RATE OF ACID DECOMPOSITION UP TO 90 PERCENT ACID UTILIZATION = -0.369058E-02

RATE OF SULFUR GENERATION 9 2 71
BENCH SCALE

SG-44

SPACE VELOCITY = 0.309191E 03 /HR
INERT GAS FLOW RATE = 7064.00 SCC/MIN
WEIGHT OF CARBON, UNLOADED = 1179.000 GMS LOADED = 1486.00 GMS

INLET PERCENT H2S = 29.000
INLET MOLAR H2S CONCENTRATION = 0.408451 MOLES H2S/MOLE INERT GAS
INLET SULFURIC ACID LOADING = 0.136000 GMS H2SO4/GM CARBON,

FINAL OUTLET PERCENT SULFUR LOADING ON CARBON = 22.040
FINAL OUTLET SULFUR LOADING ON CARBON = 0.278 GMS S/GM CARBON
INITIAL TEMPERATURE = 250.00 F
MAXIMUM TEMPERATURE = 355.00 F
FINAL TEMPERATURE = 310.00 F

TIME	PERCENT H2S	PERCENT SO2	PERCENT CO2	MOLAR CONC H2S	H2SO4 LOADING GMS ACID/GM C	RATE ACID DECOMP. GM ACID/GM C-MIN.
0.0	0.0	0.0	0.0	0.0	0.136000E 00	0.0
10.0	0.150000E 01	0.0	0.0	0.152284E-01	0.100984E 00	-0.343504E-02
20.0	0.130000E 01	0.0	0.0	0.131712E-01	0.665441E-01	-0.345301E-02
30.0	0.930000E 01	0.0	0.0	0.102536E 00	0.359172E-01	-0.267236E-02
40.0	0.115000E 02	0.0	0.0	0.129943E 00	0.103907E-01	-0.243294E-02
50.0	0.145000E 02	0.0	0.0	0.169591E 00	-0.122069E-01	-0.208659E-02
60.0	0.270000E 02	0.0	0.0	0.369863E 00	-0.243253E-01	-0.337088E-03
70.0	0.285000E 02	0.0	0.0	0.398601E 00	-0.264410E-01	-0.860399E-04
80.0	0.290000E 02	0.0	0.0	0.408451E 00	-0.268712E-01	0.0
90.0	0.293000E 02	0.0	0.0	0.414427E 00	-0.266101E-01	0.522059E-04
100.0	0.290000E 02	0.0	0.0	0.408451E 00	-0.263491E-01	0.0
110.0	0.290000E 02	0.0	0.0	0.408451E 00	-0.263491E-01	0.0

ACID LOADING = 0.136000E-01 AT 0.387428E 02 MINUTES
RATE OF ACID DECOMPOSITION = -0.246304E-02 AT 0.387428E 02 MINUTES
AVERAGE RATE OF ACID DECOMPOSITION UP TO 90 PERCENT ACID UTILIZATION = -0.302348E-02

RATE OF SULFUR GENERATION 9 2 71
BENCH SCALE

SG-45

SPACE VELOCITY = 0.528427E 03 /HR
INERT GAS FLOW RATE = 11827.00 SCC/MIN
WEIGHT OF CARBON, UNLOADED = 1151.000 GMS LOADED = 1451.00 GMS

INLET PERCENT H2S = 30.000
INLET MOLAR H2S CONCENTRATION = 0.428571 MOLES H2S/MOLE INERT GAS
INLET SULFURIC ACID LOADING = 0.136000 GMS H2SO4/GM CARBON,

FINAL OUTLET PERCENT SULFUR LOADING ON CARBON = 20.400
FINAL OUTLET SULFUR LOADING ON CARBON = 0.257 GMS S/GM CARBON
INITIAL TEMPERATURE = 260.00 F
MAXIMUM TEMPERATURE = 335.00 F
FINAL TEMPERATURE = 300.00 F

TIME	PERCENT H2S	PERCENT SO2	PERCENT CO2	MOLAR CONC H2S	H2SO4 LOADING GMS ACID/GM C	RATE ACID DECOMP. GM ACID/GM C-MIN.
0.0	0.0	0.0	0.0	0.0	0.136000E 00	0.0
10.0	0.100000E 01	0.0	0.0	0.101010E-01	0.725501E-01	-0.626933E-02
20.0	0.185000E 02	0.0	0.0	0.226994E 00	0.261037E-01	-0.301994E-02
30.0	0.270000E 02	0.0	0.0	0.369863E 00	0.660623E-02	-0.879543E-03
40.0	0.300000E 02	0.0	0.0	0.428571E 00	0.220852E-02	0.0
50.0	0.300000E 02	0.0	0.0	0.428571E 00	0.220852E-02	0.0

ACID LOADING = 0.136000E-01 AT 0.264130E 02 MINUTES
RATE OF ACID DECOMPOSITION = -0.164731E-02 AT 0.264130E 02 MINUTES
AVERAGE RATE OF ACID DECOMPOSITION UP TO 90 PERCENT ACID UTILIZATION = -0.391689E-02

RATE OF SULFUR GENERATION 9 1 71
BENCH SCALE

SG-46

SPACE VELOCITY = 0.930107E 02 /HR
INERT GAS FLOW RATE = 2392.00 SCC/MIN
WEIGHT OF CARBON, UNLOADED = 1124.000 GMS LOADED = 1417.00 GMS

INLET PERCENT H2S = 18.000
INLET MOLAR H2S CONCENTRATION = 0.219512 MOLES H2S/MOLE INERT GAS
INLET SULFURIC ACID LOADING = 0.136000 GMS H2SO4/GM CARBON,

FINAL OUTLET PERCENT SULFUR LOADING ON CARBON = 17.400
FINAL OUTLET SULFUR LOADING ON CARBON = 0.219 GMS S/GM CARBON
INITIAL TEMPERATURE = 255.00 F
MAXIMUM TEMPERATURE = 340.00 F
FINAL TEMPERATURE = 300.00 F

TIME	PERCENT H2S	PERCENT SO2	PERCENT CO2	MOLAR CONC H2S	H2SO4 LOADING GMS ACID/GM C	RATE ACID DECOMP. GM ACID/GM C-MIN.
0.0	0.0	0.0	0.0	0.0	0.136000E 00	0.0
10.0	0.0	0.0	0.0	0.0	0.129189E 00	-0.681100E-03
20.0	0.0	0.0	0.0	0.0	0.122378E 00	-0.681100E-03
30.0	0.0	0.0	0.0	0.0	0.115567E 00	-0.681100E-03
40.0	0.0	0.0	0.0	0.0	0.108756E 00	-0.681100E-03
50.0	0.0	0.0	0.0	0.0	0.101945E 00	-0.681100E-03
60.0	0.0	0.0	0.0	0.0	0.951338E-01	-0.681100E-03
70.0	0.0	0.0	0.0	0.0	0.883228E-01	-0.681100E-03
80.0	0.0	0.0	0.0	0.0	0.815118E-01	-0.681100E-03
90.0	0.0	0.0	0.0	0.0	0.747008E-01	-0.681100E-03
100.0	0.0	0.0	0.0	0.0	0.678898E-01	-0.681100E-03
110.0	0.0	0.0	0.0	0.0	0.610788E-01	-0.681100E-03
130.0	0.0	0.0	0.0	0.0	0.474568E-01	-0.681100E-03
170.0	0.0	0.0	0.0	0.0	0.202128E-01	-0.681100E-03
190.0	0.0	0.0	0.0	0.0	0.659076E-02	-0.681100E-03
230.0	0.150000E 01	0.0	0.0	0.152284E-01	-0.197082E-01	-0.633649E-03
240.0	0.700000E 01	0.0	0.0	0.752688E-01	-0.251153E-01	-0.447557E-03
260.0	0.165000E 02	0.0	0.0	0.197605E 00	-0.302706E-01	-0.679740E-04
270.0	0.180000E 02	0.0	0.0	0.219512E 00	-0.306104E-01	0.0
280.0	0.180000E 02	0.0	0.0	0.219512E 00	-0.306104E-01	0.0

ACID LOADING = 0.136000E-01 AT 0.179709E 03 MINUTES
RATE OF ACID DECOMPOSITION = -0.681100E-03 AT 0.179709E 03 MINUTES
AVERAGE RATE OF ACID DECOMPOSITION UP TO 90 PERCENT ACID UTILIZATION = -0.681099E-03

RATE OF SULFUR GENERATION 9 1 71
BENCH SCALE

SG-47

SPACE VELOCITY = 0.774927E 03 /HR
INERT GAS FLOW RATE = 16584.00 SCC/MIN
WEIGHT OF CARBON, UNLOADED = 1126.000 GMS LOADED = 1419.00 GMS

INLET PERCENT H2S = 27.300
INLET MOLAR H2S CONCENTRATION = 0.375516 MOLES H2S/MOLE INERT GAS
INLET SULFURIC ACID LOADING = 0.136000 GMS H2SO4/GM CARBON,

FINAL OUTLET PERCENT SULFUR LOADING ON CARBON = 20.440
FINAL OUTLET SULFUR LOADING ON CARBON = 0.258 GMS S/GM CARBON
INITIAL TEMPERATURE = 250.00 F
MAXIMUM TEMPERATURE = 385.00 F
FINAL TEMPERATURE = 310.00 F

TIME	PERCENT H2S	PERCENT SO2	PERCENT CO2	MOLAR CONC H2S	H2SO4 LOADING GMS ACID/GM C	RATE ACID DECOMP. GM ACID/GM C-MIN.
0.0	0.0	0.0	0.0	0.0	0.136000E 00	0.0
10.0	0.182000E 02	0.0	0.0	0.222494E 00	0.792515E-01	-0.328595E-02
20.0	0.227000E 02	0.0	0.0	0.293661E 00	0.540331E-01	-0.175773E-02
30.0	0.260000E 02	0.0	0.0	0.351351E 00	0.426499E-01	-0.518698E-03
40.0	0.266000E 02	0.0	0.0	0.362398E 00	0.386470E-01	-0.281692E-03
50.0	0.273000E 02	0.0	0.0	0.375516E 00	0.372385E-01	0.0

RATE OF SULFUR GENERATION 9 2 71
BENCH SCALE

SG-48

SPACE VELOCITY = 0.101530E 04 /HR
INERT GAS FLOW RATE = 22383.00 SCC/MIN
WEIGHT OF CARBON, UNLOADED = 1134.000 GMS LOADED = 1429.00 GMS

INLET PERCENT H2S = 33.800
INLET MOLAR H2S CONCENTRATION = 0.510574 MOLES H2S/MOLE INERT GAS
INLET SULFURIC ACID LOADING = 0.136000 GMS H2SO4/GM CARBON,

FINAL OUTLET PERCENT SULFUR LOADING ON CARBON = 19.080
FINAL OUTLET SULFUR LOADING ON CARBON = 0.240 GMS S/GM CARBON
INITIAL TEMPERATURE = 250.00 F
MAXIMUM TEMPERATURE = 385.00 F
FINAL TEMPERATURE = 290.00 F

TIME	PERCENT H2S	PERCENT SO2	PERCENT CO2	MOLAR CONC H2S	H2SO4 LOADING GMS ACID/GM C	RATE ACID DECOMP. GM ACID/GM C-MIN.
0.0	0.0	0.0	0.0	0.0	0.136000E 00	0.0
10.0	0.219000E 02	0.0	0.0	0.280410E 00	0.294148E-01	-0.662369E-02
20.0	0.324000E 02	0.0	0.0	0.479290E 00	-0.820515E-02	-0.900292E-03
30.0	0.338000E 02	0.0	0.0	0.510574E 00	-0.127066E-01	0.0

ACID LOADING = 0.136000E-01 AT 0.142038E 02 MINUTES
RATE OF ACID DECOMPOSITION = -0.421767E-02 AT 0.142038E 02 MINUTES
AVERAGE RATE OF ACID DECOMPOSITION UP TO 90 PERCENT ACID UTILIZATION = -0.591159E-02

RATE OF SULFUR GENERATION 9 2 71
BENCH SCALE

SG-49

SPACE VELOCITY = 0.181932E 03 /HR
INERT GAS FLOW RATE = 2432.00 SCC/MIN
WEIGHT OF CARBON, UNLOADED = 1118.000 GMS LOADED = 1409.00 GMS

INLET PERCENT H2S = 57.000
INLET MOLAR H2S CONCENTRATION = 1.325581 MOLES H2S/MOLE INERT GAS
INLET SULFURIC ACID LOADING = 0.136000 GMS H2SO4/GM CARBON,

FINAL OUTLET PERCENT SULFUR LOADING ON CARBON = 16.360
FINAL OUTLET SULFUR LOADING ON CARBON = 0.206 GMS S/GM CARBON
INITIAL TEMPERATURE = 250.00 F
MAXIMUM TEMPERATURE = 385.00 F
FINAL TEMPERATURE = 275.00 F

TIME	PERCENT H2S	PERCENT SO2	PERCENT CO2	MOLAR CONC H2S	H2SO4 LOADING GMS ACID/GM C	RATE ACID DECOMP. GM ACID/GM C-MIN.
0.0	0.0	0.0	0.0	0.0	0.136000E 00	0.0
10.0	0.0	0.0	0.0	0.0	0.939578E-01	-0.420422E-02
20.0	0.220000E 02	0.0	0.0	0.282051E 00	0.563884E-01	-0.330966E-02
30.0	0.325000E 02	0.0	0.0	0.481481E 00	0.264543E-01	-0.267715E-02
38.0	0.450000E 02	0.0	0.0	0.818182E 00	0.930861E-02	-0.160927E-02

ACID LOADING = 0.136000E-01 AT 0.359977E 02 MINUTES
RATE OF ACID DECOMPOSITION = -0.187655E-02 AT 0.359977E 02 MINUTES
AVERAGE RATE OF ACID DECOMPOSITION UP TO 90 PERCENT ACID UTILIZATION = -0.314368E-02

RATE OF SULFUR GENERATION 9 2 71
BENCH SCALE

SG-51

SPACE VELOCITY = 0.105347E 03 /HR
INERT GAS FLOW RATE = 2446.00 SCC/MIN
WEIGHT OF CARBON, UNLOADED = 1194.000 GMS LOADED = 1505.00 GMS

INLET PERCENT H2S = 34.500
INLET MOLAR H2S CONCENTRATION = 0.526718 MOLES H2S/MOLE INERT GAS
INLET SULFURIC ACID LOADING = 0.136000 GMS H2SO4/GM CARBON,

FINAL OUTLET PERCENT SULFUR LOADING ON CARBON = 13.840
FINAL OUTLET SULFUR LOADING ON CARBON = 0.174 GMS S/GM CARBON
INITIAL TEMPERATURE = 235.00 F
MAXIMUM TEMPERATURE = 360.00 F
FINAL TEMPERATURE = 280.00 F

TIME	PERCENT H2S	PERCENT SO2	PERCENT CO2	MOLAR CONC H2S	H2SO4 LOADING GMS ACID/GM C	RATE ACID DECOMP. GM ACID/GM C-MIN.
0.0	0.0	0.0	0.0	0.0	0.136000E 00	0.0
10.0	0.0	0.0	0.0	0.0	0.120268E 00	-0.157321E-02
20.0	0.0	0.0	0.0	0.0	0.104536E 00	-0.157321E-02
30.0	0.0	0.0	0.0	0.0	0.888035E-01	-0.157321E-02
40.0	0.0	0.0	0.0	0.0	0.730713E-01	-0.157321E-02
50.0	0.0	0.0	0.0	0.0	0.573392E-01	-0.157321E-02
60.0	0.0	0.0	0.0	0.0	0.416071E-01	-0.157321E-02
70.0	0.0	0.0	0.0	0.0	0.258749E-01	-0.157321E-02
80.0	0.0	0.0	0.0	0.0	0.101428E-01	-0.157321E-02
90.0	0.0	0.0	0.0	0.0	-0.558928E-02	-0.157321E-02
100.0	0.0	0.0	0.0	0.0	-0.213214E-01	-0.157321E-02
110.0	0.0	0.0	0.0	0.0	-0.370535E-01	-0.157321E-02
120.0	0.0	0.0	0.0	0.0	-0.527856E-01	-0.157321E-02
130.0	0.0	0.0	0.0	0.0	-0.685177E-01	-0.157321E-02
140.0	0.540000E 01	0.0	0.0	0.570825E-01	-0.833973E-01	-0.140272E-02
150.0	0.188000E 02	0.0	0.0	0.231527E 00	-0.948193E-01	-0.881682E-03
160.0	0.235000E 02	0.0	0.0	0.307190E 00	-0.102506E 00	-0.655691E-03
170.0	0.360000E 02	0.0	0.0	0.562500E 00	-0.105250E 00	0.106876E-03
180.0	0.310000E 02	0.0	0.0	0.449275E 00	-0.105872E 00	-0.231306E-03
190.0	0.345000E 02	0.0	0.0	0.526718E 00	-0.107029E 00	0.0
200.0	0.345000E 02	0.0	0.0	0.526718E 00	-0.107029E 00	0.0
210.0	0.345000E 02	0.0	0.0	0.526718E 00	-0.107029E 00	0.0

ACID LOADING = 0.136000E-01 AT 0.778025E 02 MINUTES
RATE OF ACID DECOMPOSITION = -0.157321E-02 AT 0.778025E 02 MINUTES
AVERAGE RATE OF ACID DECOMPOSITION UP TO 90 PERCENT ACID UTILIZATION = -0.157321E-02

APPENDIX A-11

SULFUR GENERATION EXPERIMENTAL DATA

TOTAL SULFUR AND SO_2 ANALYSES ON CARBON
AS A FUNCTION OF TIME FOR RUN DSG-7

(325 °F at 5.3% H_2S and 0 % H_2O)

Elapsed Time, min./100	Total Sulfur, %	SO_2 Analysis, * lbs. SO_2/100 lbs. C
0	5.3	14.63
50	6.8	17.4
75	7.3	17.6
100	7.6	18.2
125	7.2	16.4
150	8.5	13.95
175	8.4	12.21
200	8.4	11.18
235	9.6	9.4
260	9.1	8.56
280	9.7	7.5
300	9.4	6.4
330	10.4	5.52
360	11.8	4.75
390	10.5	4.1
425	11.5	3.56
450	--	3.12
490	--	2.95

* Measured SO_2 evolution by H_2O_2 scrubbing when carbon heated to 1000°F

TOTAL SULFUR AND SO_2 ANALYSES ON CARBON
AS A FUNCTION OF TIME FOR RUN DSG-8

(325°F at 10 % H_2S and 0 % H_2O)

Elapsed Time, min./100	Total Sulfur, %	SO_2 Analysis, lbs. SO_2/100 lbs. C
0	6.48	14.77
20	7.40	17.53
40	8.00	19.57
60	7.92	19.36
80	8.44	16.95
100	8.72	16.00
120	9.12	14.38
140	9.76	13.75
160	9.80	12.85
180	9.6	11.26
200	10.04	9.93
220	10.48	9.96
240	11.32	7.80
260	11.48	6.46
280	11.68	5.54
300	11.96	5.19
320	12.4	4.75
340	12.60	3.73
360	13.08	2.94
380	11.6	3.27
400	13.4	3.03
420	13.8	2.82
440	13.68	2.64
460	13.4	1.54
480	13.96	2.27
500	14.52	2.73

TOTAL SULFUR AND SO_2 ANALYSES ON CARBON
AS A FUNCTION OF TIME FOR RUN DSG-9

(325°F at 15 % H_2S and 0 % H_2O)

Elapsed Time, min./100	Total Sulfur, %	SO_2 Analysis, lbs. SO_2/100 lbs. C
0	7.08	15.67
15	7.80	17.4
35	8.32	18.43
55	8.08	16.28
75	9.04	16.96
95	9.16	14.48
115	9.88	12.78
135	10.20	12.58
155	10.32	11.04
175	10.52	9.73
200	12.0	8.57
220	12.76	4.47
260	13.60	3.89
320	14.04	3.70
350	14.28	3.18
375	14.08	2.98
400	14.60	2.88
425	14.52	2.97
450	14.60	2.96
475	14.76	2.84
500	15.20	3.06

TOTAL SULFUR AND SO_2 ANALYSES ON CARBON
AS A FUNCTION OF TIME FOR RUN DSG-10

(325°F at 20.8% H_2S and 0 % H_2O)

Elapsed Time, min./100	Total Sulfur, %	SO_2 Analysis lbs. SO_2/100 lbs. C
0	6.0	--
10	7.7	15.1
30	8.5	18.3
50	8.7	19.6
75	9.8	17.5
100	9.6	13.9
125	10.4	11.5
150	11.4	9.26
175	11.5	9.14
200	12.5	8.02
225	13.5	6.64
250	13.7	5.23
275	14.3	3.97
300	15.3	3.58
325	14.0	2.70
350	15.4	2.76
375	14.1	2.35
400	14.9	2.83
425	15.2	2.38
450	15.4	2.68
475	14.6	2.65
500	14.8	2.39

TOTAL SULFUR AND SO_2 ANALYSES ON CARBON
AS A FUNCTION OF TIME FOR RUN DSG-11

TOTAL SULFUR AND SO_2 ANALYSES ON CARBON
AS A FUNCTION OF TIME FOR RUN DSG-12
(315°F at 5.7% H_2S and 30 % H_2O)

TOTAL SULFUR AND SO_2 ANALYSES ON CARBON
AS A FUNCTION OF TIME FOR RUN DSG-11

(325°F at 31.5% H_2S and 0 % H_2O)

Elapsed Time, min./100	Total Sulfur, %	SO_2 Analysis lbs. SO_2/100 lbs. C
0	7.56	14.1
10	8.60	18.76
35	9.44	16.4
55	10.12	14.8
75	10.68	12.43
100	11.84	11.42
125	12.60	7.68
150	13.32	6.69
175	14.20	5.36
200	15.20	3.92
225	15.44	2.86
250	16.40	2.50
275	15.80	2.765
325	16.0	2.449
350	16.64	2.248
375	16.48	2.42
400	16.76	6.49
425	17.00	2.41
450	16.04	2.65
475	17.20	2.175
500	16.48	2.53

TOTAL SULFUR AND SO_2 ANALYSES ON CARBON
AS A FUNCTION OF TIME FOR RUN DSG-12

(315°F at 5.3% H_2S and 30 % H_2O)

Elapsed Time, min./100	Total Sulfur, %	SO_2 Analysis lbs. SO_2/100 lbs. C
0	6.4	16.08
15	6.60	---
22	8.4	17.30
40	7.08	16.8
70	7.52	17.04
100	7.2	17.84
125	7.36	17.48
150	7.4	17.74
200	7.96	18.8
250	8.0	17.28
275	8.20	17.48
300	7.84	16.80

TOTAL SULFUR AND SO_2 ANALYSES ON CARBON
AS A FUNCTION OF TIME FOR RUN DSG-13

(315°F at 5.3% H_2S and 20 % H_2O)

Elapsed Time, min./100	Total Sulfur, %	SO_2 Analysis lbs. SO_2/100 lbs. C
0	6.64	15.8
20	6.20	17.1
30	7.36	16.92
50	7.20	17.73
75	7.12	17.6
100	8.00	17.64
125	7.40	17.23
150	7.44	17.68
175	8.00	17.99
200	7.24	17.73
225	8.32	17.98
250	8.00	17.9
300	8.60	15.68
345	8.04	15.68
350	8.12	15.34
400	8.20	14.32
425	8.84	14.57

TOTAL SULFUR AND SO_2 ANALYSES ON CARBON
AS A FUNCTION OF TIME FOR RUN DSG-14

(315°F at 5.3% H_2S and 10% H_2O)

Elapsed Time, min./100	Total Sulfur, %	SO_2 Analysis lbs. SO_2/100 lbs. C
0	6.08	18.15
25	7.00	16.92
40	7.24	16.63
60	7.12	15.43
75	7.52	20.3
100	7.36	21.1
125	7.12	18.0
150	6.96	17.3
175	7.24	17.63
200	8.0	18.2
225	7.2	15.65
250	9.28	15.2
275	8.60	13.35
300	6.8	13.74
325	8.60	14.48
350	9.00	12.76
375	8.92	10.83
400	7.64	10.6
425	7.72	9.96
450	7.36	9.26
475	8.68	9.39
500	9.6	8.47

TOTAL SULFUR AND SO_2 ANALYSES ON CARBON
AS A FUNCTION OF TIME FOR RUN DSG-15

(275 °F at 4.4% H_2S and 0 % H_2O)

Elapsed Time, min./100	Total Sulfur, %	SO_2 Analysis, lbs. SO_2/100 lbs. C
0	6.12	14.1
15	6.44	15.5
30	6.84	16.3
50	7.62	15.8
75	7.68	14.5
100	7.72	14.2
125	8.00	13.7
150	8.08	12.9
175	8.96	12.4
200	9.00	12.05
250	8.2	11.29
275	9.0	10.12
300	9.2	9.32
350	10.0	8.29
375	10.1	9.12
400	11.0	7.51
425	11.2	6.90
450	11.2	6.60
475	10.8	7.03
500	11.1	5.85

TOTAL SULFUR AND SO_2 ANALYSES ON CARBON
AS A FUNCTION OF TIME FOR RUN DSG-16

(275°F at 14.1% H_2S and 0 % H_2O)

Elapsed Time, min./100	Total Sulfur, %	SO_2 Analysis, lbs. SO_2/100 lbs. C
15	6.1	15.80
30	7.4	15.19
50	7.8	13.75
75	8.9	12.24
100	9.7	11.50
125	10.4	---
150	9.6	9.25
175	10.6	8.64
200	10.8	7.73
225	11.2	7.43
250	11.3	6.97
300	10.1	6.28
325	11.4	5.57
375	11.8	4.75
400	12.1	4.48
425	13.8	4.99
450	13.3	3.43
475	13.5	4.31
500	13.7	3.37

TOTAL SULFUR AND SO_2 ANALYSES ON CARBON
AS A FUNCTION OF TIME FOR RUN DSG-17

(275°F at 25.4% H_2S and 0 % H_2O)

Elapsed Time, min./100	Total Sulfur, %	SO_2 Analysis, lbs. SO_2/100 lbs. C
0	6.84	15.23
20	---	---
40	9.6	10.99
60	9.44	9.79
80	11.72	7.5
125	11.28	6.47
150	12.60	5.68
175	13.52	4.36
225	14.12	5.6
250	13.76	4.38
275	13.84	4.86
300	15.0	4.9
325	14.48	3.74
350	15.0	3.93
375	15.2	3.24
400	15.32	3.64
425	14.68	4.97
450	15.72	5.28
475	14.8	5.6
500	15.36	5.19

TOTAL SULFUR AND SO_2 ANALYSES ON CARBON
AS A FUNCTION OF TIME FOR RUN DSG-18

(325°F at 5.0% H_2S and 0 % H_2O)

Elapsed Time, min./100	Total Sulfur, %	SO_2 Analysis lbs. SO_2/100 lbs. C
0	6.7	15.1
20	6.6	15.7
40	6.8	16.44
60	7.1	16.0
80	8.2	15.0
100	7.3	14.5
125	5.8	13.1
150	6.8	12.0
175	7.1	8.75
225	7.1	8.45
250	7.2	8.62
275	8.1	---
300	8.8	6.57
325	9.8	5.6
350	9.4	4.95
375	---	4.66
400	---	4.32
425	---	4.06
450	---	3.7
475	---	4.36
500	---	3.93

TOTAL SULFUR AND SO_2 ANALYSES ON CARBON
AS A FUNCTION OF TIME FOR RUN DSG-19

(325°F at 9.1% H_2S and 0 % H_2O)

Elapsed Time, min./100	Total Sulfur, %	SO_2 Analysis lbs. SO_2/100 lbs. C
0	8.5	16.1
15	6.9	16.21
30	8.0	15.83
50	7.9	14.65
75	8.4	12.92
100	8.5	11.07
125	8.6	9.25
150	9.1	7.96
175	10.2	7.52
200	10.1	6.22
225	10.2	4.78
250	10.8	3.75
275	11.7	3.82
300	11.9	3.45
350	12.0	3.31
375	13.1	2.94
400	12.8	3.21
425	12.6	2.97
450	12.2	3.05
475	12.1	2.95
500	12.8	3.25

TOTAL SULFUR AND SO_2 ANALYSES ON CARBON
AS A FUNCTION OF TIME FOR RUN DSG-20

(325°F at 18.2% H_2S and 0 % H_2O)

Elapsed Time, min./100	Total Sulfur, %	SO_2 Analysis, lbs. SO_2/100 lbs. C
0	5.9	15.0
15	7.8	16.3
35	8.2	14.6
65	9.5	12.0
100	11.3	9.16
125	10.9	7.05
150	11.5	6.25
175	12.8	4.68
200	13.2	4.6
250	13.3	3.49
275	13.4	3.38
300	13.7	3.52
325	14.5	3.19
350	13.5	3.19
375	13.3	3.61
425	13.4	4.03
450	14.5	3.48
475	13.2	2.99
500	14.5	4.13

TOTAL SULFUR AND SO_2 ANALYSES ON CARBON
AS A FUNCTION OF TIME FOR RUN DSG-21

(325°F at 26.4 H_2S and 0 % H_2O)

Elapsed Time, min./100	Total Sulfur, %	SO_2 Analysis, lbs. SO_2/100 lbs. C
0	7.6	15.21
25	8.4	16.52
50	9.4	12.3
70	10.2	10.73
85	11.3	9.7
100	12.3	7.95
125	12.6	6.31
150	15.5	5.02
175	13.8	4.19
200	13.9	3.77
225	14.9	3.59
250	15.1	3.37
275	15.0	3.12
300	15.1	3.37
325	15.2	3.44
350	14.7	3.47
375	15.2	3.33
400	15.6	2.86
425	15.0	2.6
450	15.3	2.83
475	15.4	1.13
500	15.4	3.03

TOTAL SULFUR AND SO_2 ANALYSES ON CARBON
AS A FUNCTION OF TIME FOR RUN DSG-22

(325 °F at 37.6% H_2S and 0 % H_2O)

Elapsed Time, min./100	Total Sulfur, %	SO_2 Analysis, lbs. SO_2/100 lbs. C
0	6.4	15.03
20	8.0	13.39
45	9.1	9.37
70	11.6	7.12
100	14.3	4.35
125	14.2	4.05
150	14.0	4.24
175	14.7	3.30
200	15.0	3.39
225	15.3	2.85
250	14.7	2.33
300	15.4	2.5
325	14.7	2.76
350	14.7	3.35
375	14.3	2.29
400	16.2	2.61
425	15.5	3.53
450	13.7	5.38
475	14.2	2.76
500	15.1	2.81

APPENDIX A-12

DETAILED RESULTS OF INTEGRAL RUNS

		Page
1.	Experimental Data and Results for Integral Run IR-1-4 (188 - 243 hours)	248
2.	Experimental Data and Results for Integral Run IR-1-5 (246 - 262 hours)	260
3.	Experimental Data and Results for Integral Run IR-2-6 (37 - 51 hours)	271
4.	Experimental Data and Results for Integral Run IR-2-6 (51 - 66 hours)	283
5.	Experimental Data and Results for Integral Run IR-2-7 (66 - 81 hours)	295
6.	Experimental Data and Results for Integral Run IR-2-7 (81 - 96 hours)	307
7.	Experimental Data and Results for Integral Run IR-2-7 (96 - 111 hours)	319
8.	Experimental Data and Results for Integral Run IR-2-7 (111 - 126 hours)	331
9.	Experimental Data and Results for Integral Run IR-2-8 (144 - 148 hours)	343
10.	Experimental Data and Results for Integral Run IR-2-8 (148 - 156 hours)	354
11.	Experimental Data and Results for Integral Run IR-2-8 (156 - 168 hours)	365

APPENDIX A-12-1

EXPERIMENTAL DATA AND RESULTS FOR INTEGRAL RUN IR-1-4 (188 - 243 hours)

STATUS REPORT OF OPERATING CONDITIONS FOR INTEGRATED OPERATION OF SO2 RECOVERY PROCESS

OPERATING PERIOD:

DATE: 2/23/74 TIME OF RECORD: 23:15 HRS TO 24: 0 HRS
DATE: 2/26/74 TIME OF RECORD: 0: 0 HRS TO 6:15 HRS

PROCESS ELAPSED TIME OF PERIOD: START 188.00 HRS / END 243.00 HRS LENGTH OF PERIOD: 55.00 HRS

PROCESS VARIABLES FOR OPERATING PERIOD:

S O 2 S C R B E R

2:15 HRS	191.00 HRS (ET)	SO2 CONC INLET FLUE GAS	(GS- 10) / Y10(1,T)	=	2090.000	PPM (VOLUME)
6:15 HRS	195.00 HRS (ET)	SO2 CONC INLET FLUE GAS	(GS- 10) / Y10(1,T)	=	2296.000	PPM (VOLUME)
13:15 HRS	226.00 HRS (ET)	SO2 CONC INLET FLUE GAS	(GS- 10) / Y10(1,T)	=	2240.000	PPM (VOLUME)
17:15 HRS	230.00 HRS (ET)	SO2 CONC INLET FLUE GAS	(GS- 10) / Y10(1,T)	=	2240.000	PPM (VOLUME)
21:15 HRS	234.00 HRS (ET)	SO2 CONC INLET FLUE GAS	(GS- 10) / Y10(1,T)	=	2290.000	PPM (VOLUME)
1:15 HRS	238.00 HRS (ET)	SO2 CONC INLET FLUE GAS	(GS- 10) / Y10(1,T)	=	2290.000	PPM (VOLUME)
5:15 HRS	242.00 HRS (ET)	SO2 CONC INLET FLUE GAS	(GS- 10) / Y10(1,T)	=	2240.000	PPM (VOLUME)
A V E R A G E :		SO2 CONC INLET FLUE GAS	(GS- 10) / AY10A	=	2240.857	PPM (VOLUME)
2:15 HRS	191.00 HRS (ET)	SO2 CONC OUTLET FLUE GAS	(GS- 16) / Y16(1,T)	=	38.000	PPM (VOLUME)
6:15 HRS	195.00 HRS (ET)	SO2 CONC OUTLET FLUE GAS	(GS- 16) / Y16(1,T)	=	70.000	PPM (VOLUME)
13:15 HRS	226.00 HRS (ET)	SO2 CONC OUTLET FLUE GAS	(GS- 16) / Y16(1,T)	=	150.000	PPM (VOLUME)
17:15 HRS	230.00 HRS (ET)	SO2 CONC OUTLET FLUE GAS	(GS- 16) / Y16(1,T)	=	175.000	PPM (VOLUME)
21:15 HRS	234.00 HRS (ET)	SO2 CONC OUTLET FLUE GAS	(GS- 16) / Y16(1,T)	=	162.500	PPM (VOLUME)
1:15 HRS	238.00 HRS (ET)	SO2 CONC OUTLET FLUE GAS	(GS- 16) / Y16(1,T)	=	165.000	PPM (VOLUME)
5:15 HRS	242.00 HRS (ET)	SO2 CONC OUTLET FLUE GAS	(GS- 16) / Y16(1,T)	=	157.500	PPM (VOLUME)
A V E R A G E :		SO2 CONC OUTLET FLUE GAS	(GS- 16) / AY16A	=	131.143	PPM (VOLUME)
23:15 HRS	188.00 HRS (ET)	H2O CONC INLET FLUE GAS	(GS- 10) / Y10(4,T)	=	10.000	% (VOLUME)
6:15 HRS	243.00 HRS (ET)	H2O CONC INLET FLUE GAS	(GS- 10) / Y10(4,T)	=	10.000	% (VOLUME)
A V E R A G E :		H2O CONC INLET FLUE GAS	(GS- 10) / AY10D	=	10.000	% (VOLUME)
1:15 HRS	190.00 HRS (ET)	ORIFICE PRESSURE DROP	(DP- 10) / DP10(T)	=	2.400	INCHES H2O
9:15 HRS	198.00 HRS (ET)	ORIFICE PRESSURE DROP	(DP- 10) / DP10(T)	=	2.400	INCHES H2O
17:15 HRS	230.00 HRS (ET)	ORIFICE PRESSURE DROP	(DP- 10) / DP10(T)	=	2.400	INCHES H2O
1:15 HRS	238.00 HRS (ET)	ORIFICE PRESSURE DROP	(DP- 10) / DP10(T)	=	2.400	INCHES H2O
A V E R A G E :		ORIFICE PRESSURE DROP	(DP- 10) / ADP10	=	2.400	INCHES H2O
2:45 HRS	191.50 HRS (ET)	ORIFICE TEMPERATURE	(TL- 10) / TL10(T)	=	304.000	DEG F
14: 2 HRS	202.80 HRS (ET)	ORIFICE TEMPERATURE	(TL- 10) / TL10(T)	=	308.000	DEG F
3:15 HRS	216.00 HRS (ET)	ORIFICE TEMPERATURE	(TL- 10) / TL10(T)	=	306.000	DEG F
12:15 HRS	225.00 HRS (ET)	ORIFICE TEMPERATURE	(TL- 10) / TL10(T)	=	306.000	DEG F
1: 2 HRS	237.80 HRS (ET)	ORIFICE TEMPERATURE	(TL- 10) / TL10(T)	=	309.000	DEG F
5:15 HRS	242.00 HRS (ET)	ORIFICE TEMPERATURE	(TL- 10) / TL10(T)	=	312.000	DEG F
A V E R A G E :		ORIFICE TEMPERATURE	(TL- 10) / ATL10	=	307.500	DEG F
19:15 HRS	184.00 HRS (ET)	WEIGHT CYCLONE DUST	(D- 11) / CD11(T)	=	0.0	LB DUST
4: 2 HRS	192.80 HRS (ET)	WEIGHT CYCLONE DUST	(D- 11) / CD11(T)	=	1.250	LB DUST
11:15 HRS	200.00 HRS (ET)	WEIGHT CYCLONE DUST	(D- 11) / CD11(T)	=	1.200	LB DUST
19:15 HRS	208.00 HRS (ET)	WEIGHT CYCLONE DUST	(D- 11) / CD11(T)	=	1.400	LB DUST
3:15 HRS	216.00 HRS (ET)	WEIGHT CYCLONE DUST	(D- 11) / CD11(T)	=	1.500	LB DUST
11:15 HRS	224.00 HRS (ET)	WEIGHT CYCLONE DUST	(D- 11) / CD11(T)	=	1.600	LB DUST
19:15 HRS	232.00 HRS (ET)	WEIGHT CYCLONE DUST	(D- 11) / CD11(T)	=	1.500	LB DUST

11:15 HRS	248.00 HRS (ET)	WEIGHT CYCLONE DUST	(D- 11) /	CD11(T)	=	2.700	LB DUST
	T O T A L :	WEIGHT CYCLONE DUST	(D- 11) /	WD11	=	11.150	LB DUST
	R A T E :	WEIGHT CYCLONE DUST	(D- 11) /	RD11	=	0.174	LB DUST/HR
23:15 HRS	188.00 HRS (ET)	WEIGHT COLLECTOR DUST	(D- 12) /	CD12(T)	=	0.0	LB DUST
6:15 HRS	243.00 HRS (ET)	WEIGHT COLLECTOR DUST	(D- 12) /	CD12(T)	=	9.300	LB DUST
	T O T A L :	WEIGHT COLLECTOR DUST	(D- 12) /	WD12	=	9.300	LB DUST
	R A T E :	WEIGHT COLLECTOR DUST	(D- 12) /	RD12	=	0.169	LB DUST/HR
20:15 HRS	185.00 HRS (ET)	WEIGHT CARBON WEEPAGE	(CW- 12) /	CW12(T)	=	0.0	LB DUST
8:15 HRS	197.00 HRS (ET)	WEIGHT CARBON WEEPAGE	(CW- 12) /	CW12(T)	=	0.118	LB DUST
	T O T A L :	WEIGHT CARBON WEEPAGE	(CW- 12) /	WCW12	=	0.118	LB DUST
	R A T E :	WEIGHT CARBON WEEPAGE	(CW- 12) /	RCW12	=	0.010	LB DUST/HR
19:15 HRS	184.00 HRS (ET)	% TOT S ON CYCLONE DUST	(D- 11) /	D11(1,T)	=	6.240	% (WEIGHT)
3:15 HRS	216.00 HRS (ET)	% TOT S ON CYCLONE DUST	(D- 11) /	D11(1,T)	=	6.240	% (WEIGHT)
11:15 HRS	248.00 HRS (ET)	% TOT S ON CYCLONE DUST	(D- 11) /	D11(1,T)	=	6.600	% (WEIGHT)
	A V E R A G E :	% TOT S ON CYCLONE DUST	(D- 11) /	AD11A	=	6.560	% (WEIGHT)
6:15 HRS	243.00 HRS (ET)	% TOT S ON COLLECTOR DUST	(D- 12) /	D12(1,T)	=	10.080	% (WEIGHT)
	A V E R A G E :	% TOT S ON COLLECTOR DUST	(D- 12) /	AD12A	=	10.080	% (WEIGHT)

6" DIA CARBON PRECONDITIONER

5:15 HRS	194.00 HRS (ET)	% TOT S ON INLET CARBON	(CS-301) / Z301(1,T) =	8.880	%	(WEIGHT)
9:15 HRS	222.00 HRS (ET)	% TOT S ON INLET CARBON	(CS-301) / Z301(1,T) =	8.560	%	(WEIGHT)
9:15 HRS	246.00 HRS (ET)	% TOT S ON INLET CARBON	(CS-301) / Z301(1,T) =	8.000	%	(WEIGHT)
	AVERAGE :	% TOT S ON INLET CARBON	(CS-301) / AZ301A =	8.480	%	(WEIGHT)
5:15 HRS	194.00 HRS (ET)	% H2O ON INLET CARBON	(CS-301) / Z301(2,T) =	5.050	%	(WEIGHT)
9:15 HRS	222.00 HRS (ET)	% H2O ON INLET CARBON	(CS-301) / Z301(2,T) =	5.870	%	(WEIGHT)
9:15 HRS	246.00 HRS (ET)	% H2O ON INLET CARBON	(CS-301) / Z301(2,T) =	9.330	%	(WEIGHT)
	AVERAGE :	% H2O ON INLET CARBON	(CS-301) / AZ301B =	6.750	%	(WEIGHT)
23:15 HRS	188.00 HRS (ET)	WEIGHT CYCLONE DUST	(D-301) / CD301(T) =	0.0	LB	DUST
6:15 HRS	243.00 HRS (ET)	WEIGHT CYCLONE DUST	(D-301) / CD301(T) =	0.0	LB	DUST
	TOTAL :	WEIGHT CYCLONE DUST	(D-301) / WD301 =	0.0	LB	DUST
	RATE :	WEIGHT CYCLONE DUST	(D-301) / RD301 =	0.0	LB	DUST/HR
6:15 HRS	243.00 HRS (ET)	% TOT S ON CYCLONE DUST	(D-301) / D301(1,T) =	0.0	%	(WEIGHT)
	AVERAGE :	% TOT S ON CYCLONE DUST	(D-301) / AD301A =	0.0	%	(WEIGHT)

S U L F U R G E N E R A T O R

20:26 HRS	233.20 HRS (ET)	SO2 CONC OUTLET GAS	(GS-206) / Y206(1,T) =	0.990	% (VOLUME)
0:15 HRS	237.00 HRS (ET)	SO2 CONC OUTLET GAS	(GS-206) / Y206(1,T) =	0.690	% (VOLUME)
	A V E R A G E :	SO2 CONC OUTLET GAS	(GS-206) / AY206A =	0.840	% (VOLUME)
17: 8 HRS	205.90 HRS (ET)	H2S CONC INLET GAS	(GS-200) / Y200(2,T) =	29.800	% (VOLUME)
23:15 HRS	212.00 HRS (ET)	H2S CONC INLET GAS	(GS-200) / Y200(2,T) =	31.600	% (VOLUME)
4:32 HRS	217.30 HRS (ET)	H2S CONC INLET GAS	(GS-200) / Y200(2,T) =	31.900	% (VOLUME)
17:32 HRS	230.30 HRS (ET)	H2S CONC INLET GAS	(GS-200) / Y200(2,T) =	31.800	% (VOLUME)
22:38 HRS	235.40 HRS (ET)	H2S CONC INLET GAS	(GS-200) / Y200(2,T) =	30.600	% (VOLUME)
6:26 HRS	243.20 HRS (ET)	H2S CONC INLET GAS	(GS-200) / Y200(2,T) =	30.800	% (VOLUME)
	A V E R A G E :	H2S CONC INLET GAS	(GS-200) / AY200B =	31.083	% (VOLUME)
20:26 HRS	233.20 HRS (ET)	H2S CONC OUTLET GAS	(GS-206) / Y206(2,T) =	2.400	% (VOLUME)
0:15 HRS	237.00 HRS (ET)	H2S CONC OUTLET GAS	(GS-206) / Y206(2,T) =	2.500	% (VOLUME)
	A V E R A G E :	H2S CONC OUTLET GAS	(GS-206) / AY206B =	2.450	% (VOLUME)
17: 8 HRS	205.90 HRS (ET)	H2 CONC INLET GAS	(GS-200) / Y200(3,T) =	0.100	% (VOLUME)
23:15 HRS	212.00 HRS (ET)	H2 CONC INLET GAS	(GS-200) / Y200(3,T) =	1.000	% (VOLUME)
4:32 HRS	217.30 HRS (ET)	H2 CONC INLET GAS	(GS-200) / Y200(3,T) =	0.800	% (VOLUME)
17:32 HRS	230.30 HRS (ET)	H2 CONC INLET GAS	(GS-200) / Y200(3,T) =	0.900	% (VOLUME)
22:38 HRS	235.40 HRS (ET)	H2 CONC INLET GAS	(GS-200) / Y200(3,T) =	1.000	% (VOLUME)
6:26 HRS	243.20 HRS (ET)	H2 CONC INLET GAS	(GS-200) / Y200(3,T) =	0.0	% (VOLUME)
	A V E R A G E :	H2 CONC INLET GAS	(GS-200) / AY200C =	0.633	% (VOLUME)
16:32 HRS	229.30 HRS (ET)	H2 CONC OUTLET GAS	(GS-206) / Y206(3,T) =	0.0	% (VOLUME)
20:26 HRS	233.20 HRS (ET)	H2 CONC OUTLET GAS	(GS-206) / Y206(3,T) =	0.0	% (VOLUME)
0:15 HRS	237.00 HRS (ET)	H2 CONC OUTLET GAS	(GS-206) / Y206(3,T) =	0.400	% (VOLUME)
	A V E R A G E :	H2 CONC OUTLET GAS	(GS-206) / AY206C =	0.133	% (VOLUME)
23:15 HRS	212.00 HRS (ET)	H2O CONC INLET GAS	(GS-200) / Y200(4,T) =	11.400	% (VOLUME)
4:32 HRS	217.30 HRS (ET)	H2O CONC INLET GAS	(GS-200) / Y200(4,T) =	11.800	% (VOLUME)
17:32 HRS	230.30 HRS (ET)	H2O CONC INLET GAS	(GS-200) / Y200(4,T) =	10.200	% (VOLUME)
22:38 HRS	235.40 HRS (ET)	H2O CONC INLET GAS	(GS-200) / Y200(4,T) =	12.800	% (VOLUME)
6:26 HRS	243.20 HRS (ET)	H2O CONC INLET GAS	(GS-200) / Y200(4,T) =	14.600	% (VOLUME)
	A V E R A G E :	H2O CONC INLET GAS	(GS-200) / AY200D =	12.160	% (VOLUME)
20:26 HRS	233.20 HRS (ET)	H2O CONC OUTLET GAS	(GS-206) / Y206(4,T) =	48.900	% (VOLUME)
0:15 HRS	237.00 HRS (ET)	H2O CONC OUTLET GAS	(GS-206) / Y206(4,T) =	46.300	% (VOLUME)
	A V E R A G E :	H2O CONC OUTLET GAS	(GS-206) / AY206D =	47.600	% (VOLUME)
17: 8 HRS	205.90 HRS (ET)	N2 CONC INLET GAS	(GS-200) / Y200(5,T) =	57.700	% (VOLUME)
23:15 HRS	212.00 HRS (ET)	N2 CONC INLET GAS	(GS-200) / Y200(5,T) =	55.600	% (VOLUME)
4:32 HRS	217.30 HRS (ET)	N2 CONC INLET GAS	(GS-200) / Y200(5,T) =	55.200	% (VOLUME)
17:32 HRS	230.30 HRS (ET)	N2 CONC INLET GAS	(GS-200) / Y200(5,T) =	56.700	% (VOLUME)
22:38 HRS	235.40 HRS (ET)	N2 CONC INLET GAS	(GS-200) / Y200(5,T) =	55.300	% (VOLUME)
6:26 HRS	243.20 HRS (ET)	N2 CONC INLET GAS	(GS-200) / Y200(5,T) =	54.200	% (VOLUME)
	A V E R A G E :	N2 CONC INLET GAS	(GS-200) / AY200E =	55.783	% (VOLUME)
20:26 HRS	233.20 HRS (ET)	N2 CONC OUTLET GAS	(GS-206) / Y206(5,T) =	47.500	% (VOLUME)
0:15 HRS	237.00 HRS (ET)	N2 CONC OUTLET GAS	(GS-206) / Y206(5,T) =	49.900	% (VOLUME)
	A V E R A G E :	N2 CONC OUTLET GAS	(GS-206) / AY206E =	48.700	% (VOLUME)
2:15 HRS	191.00 HRS (ET)	N2 INLET VOL FLOW RATE	(G-200) / G200(5,T) =	150.000	CFH (70 DEG F)
21:15 HRS	210.00 HRS (ET)	N2 INLET VOL FLOW RATE	(G-200) / G200(5,T) =	150.000	CFH (70 DEG F)
9:15 HRS	222.00 HRS (ET)	N2 INLET VOL FLOW RATE	(G-200) / G200(5,T) =	150.000	CFH (70 DEG F)
17:15 HRS	230.00 HRS (ET)	N2 INLET VOL FLOW RATE	(G-200) / G200(5,T) =	150.000	CFH (70 DEG F)
5:15 HRS	242.00 HRS (ET)	N2 INLET VOL FLOW RATE	(G-200) / G200(5,T) =	150.000	CFH (70 DEG F)

	A V E R A G E :	N2 INLET VOL FLOW RATE	(G-200) /	AG200E =	150.000 CFM (70 DEG F)
5:15 HRS	194.00 HRS (ET)	% TOT S ON INLET CARBON	(CS-302) /	Z302(1,T) =	8.880 % (WEIGHT)
9:15 HRS	222.00 HRS (ET)	% TOT S ON INLET CARBON	(CS-302) /	Z302(1,T) =	8.560 % (WEIGHT)
9:15 HRS	246.00 HRS (ET)	% TOT S ON INLET CARBON	(CS-302) /	Z302(1,T) =	8.000 % (WEIGHT)
	A V E R A G E :	% TOT S ON INLET CARBON	(CS-302) /	AZ302A =	8.480 % (WEIGHT)
9:15 HRS	222.00 HRS (ET)	% TOT S ON OUTLET CARBON	(CS-200) /	Z200(1,T) =	23.600 % (WEIGHT)
9:15 HRS	246.00 HRS (ET)	% TOT S ON OUTLET CARBON	(CS-200) /	Z200(1,T) =	25.240 % (WEIGHT)
	A V E R A G E :	% TOT S ON OUTLET CARBON	(CS-200) /	AZ200A =	24.420 % (WEIGHT)
5:15 HRS	194.00 HRS (ET)	% H2O ON INLET CARBON	(CS-302) /	Z302(2,T) =	5.050 % (WEIGHT)
9:15 HRS	222.00 HRS (ET)	% H2O ON INLET CARBON	(CS-302) /	Z302(2,T) =	5.870 % (WEIGHT)
9:15 HRS	246.00 HRS (ET)	% H2O ON INLET CARBON	(CS-302) /	Z302(2,T) =	9.330 % (WEIGHT)
	A V E R A G E :	% H2O ON INLET CARBON	(CS-302) /	AZ302B =	6.750 % (WEIGHT)
5:15 HRS	194.00 HRS (ET)	% H2O ON OUTLET CARBON	(CS-200) /	Z200(2,T) =	0.740 % (WEIGHT)
9:15 HRS	222.00 HRS (ET)	% H2O ON OUTLET CARBON	(CS-200) /	Z200(2,T) =	0.0 % (WEIGHT)
9:15 HRS	246.00 HRS (ET)	% H2O ON OUTLET CARBON	(CS-200) /	Z200(2,T) =	0.270 % (WEIGHT)
	A V E R A G E :	% H2O ON OUTLET CARBON	(CS-200) /	AZ200B =	0.337 % (WEIGHT)
17:15 HRS	206.00 HRS (ET)	% ACID ON OUTLET CARBON	(CS-200) /	Z200(3,T) =	0.760 % (WEIGHT)
13:15 HRS	226.00 HRS (ET)	% ACID ON OUTLET CARBON	(CS-200) /	Z200(3,T) =	0.710 % (WEIGHT)
9:15 HRS	246.00 HRS (ET)	% ACID ON OUTLET CARBON	(CS-200) /	Z200(3,T) =	1.060 % (WEIGHT)
	A V E R A G E :	% ACID ON OUTLET CARBON	(CS-200) /	AZ200C =	0.843 % (WEIGHT)

H2S GENERATOR/SULFUR STRIPPER

2: 8 HRS	190.90 HRS (ET)	H2 CONC INLET GAS	(GS-100) / Y100(3,T) =	47.000	% (VOLUME)
21:15 HRS	234.00 HRS (ET)	H2 CONC INLET GAS	(GS-100) / Y100(3,T) =	47.200	% (VOLUME)
	A V E R A G E :	H2 CONC INLET GAS	(GS-100) / AY100C =	47.100	% (VOLUME)
17:32 HRS	230.30 HRS (ET)	H2 CONC OUTLET GAS	(GS-108) / Y108(3,T) =	0.900	% (VOLUME)
22:38 HRS	235.40 HRS (ET)	H2 CONC OUTLET GAS	(GS-108) / Y108(3,T) =	1.000	% (VOLUME)
6:26 HRS	243.20 HRS (ET)	H2 CONC OUTLET GAS	(GS-108) / Y108(3,T) =	0.0	% (VOLUME)
	A V E R A G E :	H2 CONC OUTLET GAS	(GS-108) / AY108C =	0.633	% (VOLUME)
2: 8 HRS	190.90 HRS (ET)	N2 CONC INLET GAS	(GS-100) / Y100(5,T) =	53.000	% (VOLUME)
21:15 HRS	234.00 HRS (ET)	N2 CONC INLET GAS	(GS-100) / Y100(5,T) =	52.800	% (VOLUME)
	A V E R A G E :	N2 CONC INLET GAS	(GS-100) / AY100E =	52.900	% (VOLUME)
17:32 HRS	230.30 HRS (ET)	N2 CONC OUTLET GAS	(GS-108) / Y108(5,T) =	56.700	% (VOLUME)
22:38 HRS	235.40 HRS (ET)	N2 CONC OUTLET GAS	(GS-108) / Y108(5,T) =	55.300	% (VOLUME)
6:26 HRS	243.20 HRS (ET)	N2 CONC OUTLET GAS	(GS-108) / Y108(5,T) =	54.200	% (VOLUME)
	A V E R A G E :	N2 CONC OUTLET GAS	(GS-108) / AY108E =	55.400	% (VOLUME)
17:32 HRS	230.30 HRS (ET)	H2S CONC OUTLET GAS	(GS-108) / Y108(2,T) =	31.800	% (VOLUME)
22:38 HRS	235.40 HRS (ET)	H2S CONC OUTLET GAS	(GS-108) / Y108(2,T) =	30.600	% (VOLUME)
6:26 HRS	243.20 HRS (ET)	H2S CONC OUTLET GAS	(GS-108) / Y108(2,T) =	30.800	% (VOLUME)
	A V E R A G E :	H2S CONC OUTLET GAS	(GS-108) / AY108B =	31.067	% (VOLUME)
17:32 HRS	230.30 HRS (ET)	H2O CONC OUTLET GAS	(GS-108) / Y108(4,T) =	10.200	% (VOLUME)
22:38 HRS	235.40 HRS (ET)	H2O CONC OUTLET GAS	(GS-108) / Y108(4,T) =	12.800	% (VOLUME)
6:26 HRS	243.20 HRS (ET)	H2O CONC OUTLET GAS	(GS-108) / Y108(4,T) =	14.600	% (VOLUME)
	A V E R A G E :	H2O CONC OUTLET GAS	(GS-108) / AY108D =	12.533	% (VOLUME)
2:15 HRS	191.00 HRS (ET)	N2 INLET VOL FLOW RATE	(G-100) / G100(5,T) =	165.000	CFH (70 DEG F)
21:15 HRS	210.00 HRS (ET)	N2 INLET VOL FLOW RATE	(G-100) / G100(5,T) =	165.000	CFH (70 DEG F)
9:15 HRS	222.00 HRS (ET)	N2 INLET VOL FLOW RATE	(G-100) / G100(5,T) =	165.000	CFH (70 DEG F)
2:15 HRS	23.00 HRS (ET)	N2 INLET VOL FLOW RATE	(G-100) / G100(5,T) =	165.000	CFH (70 DEG F)
5:15 HRS	242.00 HRS (ET)	N2 INLET VOL FLOW RATE	(G-100) / G100(5,T) =	165.000	CFH (70 DEG F)
	A V E R A G E :	N2 INLET VOL FLOW RATE	(G-100) / AG100E =	165.000	CFH (70 DEG F)
20:15 HRS	185.00 HRS (ET)	WEIGHT CYCLONE DUST	(D-101) / CD101(T) =	0.0	LB DUST
8:15 HRS	197.00 HRS (ET)	WEIGHT CYCLONE DUST	(D-101) / CD101(T) =	0.176	LB DUST
8:15 HRS	221.00 HRS (ET)	WEIGHT CYCLONE DUST	(D-101) / CD101(T) =	0.322	LB DUST
4:15 HRS	241.00 HRS (ET)	WEIGHT CYCLONE DUST	(D-101) / CD101(T) =	0.263	LB DUST
	T O T A L :	WEIGHT CYCLONE DUST	(D-101) / WD101 =	0.761	LB DUST
	R A T E :	WEIGHT CYCLONE DUST	(D-101) / RD101 =	0.014	LB DUST/HR
23:15 HRS	188.00 HRS (ET)	WEIGHT FILTER DUST	(D-102) / CD102(T) =	0.0	LB DUST
6:15 HRS	243.00 HRS (ET)	WEIGHT FILTER DUST	(D-102) / CD102(T) =	0.0	LB DUST
	T O T A L :	WEIGHT FILTER DUST	(D-102) / WD102 =	0.0	LB DUST
	R A T E :	WEIGHT FILTER DUST	(D-102) / RD102 =	0.0	LB DUST/HR
16:15 HRS	205.00 HRS (ET)	% TOT S ON CYCLONE DUST	(D-101) / D101(1,T) =	31.600	% (WEIGHT)
12:15 HRS	225.00 HRS (ET)	% TOT S ON CYCLONE DUST	(D-101) / D101(1,T) =	30.700	% (WEIGHT)
	A V E R A G E :	% TOT S ON CYCLONE DUST	(D-101) / AD101A =	31.150	% (WEIGHT)
6:15 HRS	243.00 HRS (ET)	% TOT S ON FILTER DUST	(D-102) / D102(1,T) =	0.0	% (WEIGHT)
	A V E R A G E :	% TOT S ON FILTER DUST	(D-102) / AD102A =	0.0	% (WEIGHT)

C A R B O N I N V E N T O R Y H O P P E R

5:15 HRS	194.00 HRS (ET)	% RESIDUAL S ON CARBON	(CS- 90) /	Z90(1,T) =	3.160	% (WEIGHT)
9:15 HRS	222.00 HRS (ET)	% RESIDUAL S ON CARBON	(CS- 90) /	Z90(1,T) =	3.000	% (WEIGHT)
9:15 HRS	246.00 HRS (ET)	% RESIDUAL S ON CARBON	(CS- 90) /	Z90(1,T) =	3.600	% (WEIGHT)
	A V E R A G E :	% RESIDUAL S ON CARBON	(CS- 90) /	AZ90A =	3.253	% (WEIGHT)
5:15 HRS	194.00 HRS (ET)	% RESIDUAL H2O ON CARBON	(CS- 90) /	Z90(2,T) =	0.130	% (WEIGHT)
9:15 HRS	246.00 HRS (ET)	% RESIDUAL H2O ON CARBON	(CS- 90) /	Z90(2,T) =	0.320	% (WEIGHT)
	A V E R A G E :	% RESIDUAL H2O ON CARBON	(CS- 90) /	AZ90B =	0.225	% (WEIGHT)
23:15 HRS	188.00 HRS (ET)	CARBON RECYCLE RATE	(C- 90) /	C90(1,T) =	31.000	LB MAT'L/HR
9:15 HRS	246.00 HRS (ET)	CARBON RECYCLE RATE	(C- 90) /	C90(1,T) =	31.000	LB MAT'L/HR
	A V E R A G E :	CARBON RECYCLE RATE	(C- 90) /	AC90A =	31.000	LB MAT'L/HR

S U L F U R C O N D E N S E R

23:15 HRS	236.00 HRS (ET)	WEIGHT SULFUR COLLECTED	(S-401) /	S401(T) =	0.0	LB SULFUR
5:15 HRS	242.00 HRS (ET)	WEIGHT SULFUR COLLECTED	(S-401) /	S401(T) =	8.500	LB SULFUR
9:15 HRS	246.00 HRS (ET)	WEIGHT SULFUR COLLECTED	(S-401) /	S401(T) =	7.600	LB SULFUR
	T O T A L :	WEIGHT SULFUR COLLECTED	(S-401) /	WS401 =	16.100	LB SULFUR
	R A T E :	WEIGHT SULFUR COLLECTED	(S-401) /	RS401 =	1.610	LB SULFUR/HR

STATUS REPORT OF OPERATING CONDITIONS FOR INTEGRATED OPERATION OF SO2 RECOVERY PROCESS

OPERATING PERIOD:

DATE: 2/23/74 TIME OF RECORD: 23:15 HRS TO 24: 0 HRS
DATE: 2/26/74 TIME OF RECORD: 0: 0 HRS TO 6:15 HRS

PROCESS ELAPSED TIME OF PERIOD: START 188.00 HRS / END 243.00 HRS LENGTH OF PERIOD: 55.00 HRS

SUMMARY OF INTEGRATED PROCESS PERFORMANCE:

1.	SO2 REMOVAL	PRSO2 =	94.15 % (ACTUAL)	90.0 % (GOAL)
2.	H2S UTILIZATION	PUH2S =	90.97 % (ACTUAL)	95.0 % (GOAL)
3.	ACID CONVERSION (TO SULFUR)	PVCS =	86.56 % (ACTUAL)	99.0 % (GOAL)
4.	H2 UTILIZATION (TO H2S)	PHCHS =	72.29 % (ACTUAL)	90.0 % (GOAL)
5.	SULFUR RECOVERY	PRS =	63.38 % (ACTUAL) 18.34 % (ACTUAL)	100.0 % (GOAL) OF SCRBED SO2 25.0 % (GOAL) OF STRIPPED SULFUR
6.	H2 UTILIZATION 4" UNIT	PUH2 =	98.53 %	
7.	RESIDUAL SULFUR ON CARBON	X90A =	0.0337 LB S/LB C	
8.	CARBON RECYCLE RATE (DB)	RC90 =	29.922 LB C(DB)/HR	
9.	ACID LOADING INLET CARBON 6" UNIT	X301C =	0.2560 LB ACID/LB C	
10.	MOISTURE CONTENT INLET CARBON 6" UNIT	X301B =	0.0934 LB H2O/LB C	
11.	ACID LOADING INLET CARBON 8" UNIT	X302C =	0.2560 LB ACID/LB C	
12.	MOISTURE CONTENT INLET CARBON 8" UNIT	X302B =	0.0934 LB H2O/LB C	
13.	TOTAL ACID CONVERTED 8" UNIT	PVC =	95.59 %	
14.	SULFUR CONVERSION (TO H2S)	PSCHS =	87.40 %	
15.	SULFUR CONDENSER EFFICIENCY	ERV400=	145.58 %	

MAJOR EVENTS DURING OPERATING PERIOD:

SOLVED PROBLEM WITH OFF-GAS ANALYSIS FROM SULFUR GENERATOR
AT END OF PERIOD LOWERED HYDROGEN FLOW RATE TO 120 CFH

STATUS REPORT OF OPERATING CONDITIONS FOR INTEGRATED OPERATION OF SO2 RECOVERY PROCESS

OPERATING PERIOD:

DATE: 2/23/74 TIME OF RECORD: 23:15 HRS TO 24: 0 HRS
DATE: 2/26/74 TIME OF RECORD: 0: 0 HRS TO 6:15 HRS

PROCESS ELAPSED TIME OF PERIOD: START 188.00 HRS / END 243.00 HRS LENGTH OF PERIOD: 55.00 HRS

SULFUR MATERIAL BALANCE (USING PROCESS H2S):

S O 2 S C R B E R

I N

INLET GAS AS SO2	(G- 13) /	BG10A =	2.6983 LB SULFUR/HR
INLET C AS RESIDUAL S	(C- 11) /	BC11A =	1.0085 LB SULFUR/HR
T O T A L I N :	(RV- 10) /	SI10 =	3.7069 LB SULFUR/HR

C U T

OUTLET GAS AS SO2	(G- 13) /	BG13A =	0.1579 LB SULFUR/HR
OUTLET CARBON	(C- 12) /	BC12A =	3.5093 LB SULFUR/HR
CYCLONE DUST	(C- 11) /	BD11A =	0.0114 LB SULFUR/HR
COLLECTOR DUST	(C- 12) /	BD12A =	0.0170 LB SULFUR/HR
CARBON WEEPAGE	(CW- 12) /	BCW12A =	0.0012 LB SULFUR/HR
T O T A L O U T :	(RV- 10) /	SO10 =	3.6968 LB SULFUR/HR

6" D I A C A R B O N P R E C O N D I T I O N E R

I N

INLET CARBON	(C- 12) /	BC12A =	3.5093 LB SULFUR/HR
T O T A L I N :	(RV-300) /	SI300 =	3.5093 LB SULFUR/HR

C U T

OUTLET CARBON	(C-201) /	BC201A =	3.5093 LB SULFUR/HR
CYCLONE DUST	(C-301) /	BD301A =	0.0 LB SULFUR/HR
T O T A L O U T :	(RV-300) /	SO300 =	3.5093 LB SULFUR/HR

S U L F U R G E N E R A T O R

I N

INLET GAS AS H2S (CYL)	(C-201) /	BG201B =	0.0 LB SULFUR/HR
INLET GAS AS H2S (PROC)	(C-201) /	BG203B =	7.6705 LB SULFUR/HR
INLET CARBON	(C-201) /	BC201A =	3.5093 LB SULFUR/HR
T O T A L I N :	(RV-200) /	SI200 =	11.1797 LB SULFUR/HR

C U T

OUTLET GAS AS H2S	(G-205) /	BG205B =	0.6881 LB SULFUR/HR
OUTLET GAS AS SO2	(G-205) /	BG205A =	0.2359 LB SULFUR/HR
OUTLET CARBON	(C-202) /	BC202A =	9.7849 LB SULFUR/HR
T O T A L O U T :	(RV-200) /	SO200 =	10.7090 LB SULFUR/HR

H2S GENERATOR/SULFUR STRIPPER

IN				
	INLET CARBON	(C-1C2) / BC202A =	9.7849	LB SULFUR/HR
	TOTAL IN :	(RV-1C0) / S1100 =	9.7849	LB SULFUR/HR
OUT				
	OUTLET CARBON	(C-1C3) / BC103A =	1.0085	LB SULFUR/HR
	OUTLET GAS AS H2S	(G-1C4) / BG104B =	7.6705	LB SULFUR/HR
	OUTLET GAS AS S	(G-1C4) / BG104S =	1.6100	LB SULFUR/HR
	CYCLONE DUST	(D-1C1) / BD101A =	0.0042	LB SULFUR/HR
	FILTER DUST	(D-1C2) / BD102A =	0.0	LB SULFUR/HR
	TOTAL OUT :	(RV-1C0) / S0100 =	10.2933	LB SULFUR/HR

OVERALL SULFUR BALANCE

IN				
	INLET GAS 18" UNIT AS SO2	(G-1C1) / BG10A =	2.6983	LB SULFUR/HR
	INLET GAS 8" UNIT AS CYL H2S	(G-2C1) / BG201B =	0.0	LB SULFUR/HR
	TOTAL SULFUR IN :		2.6983	LB SULFUR/HR
OUT				
	OUTLET GAS 18" UNIT AS SO2	(G-1C3) / BG13A =	0.1579	LB SULFUR/HR
	CYCLONE DUST 18" UNIT	(D-1C1) / BD11A =	0.0114	LB SULFUR/HR
	COLLECTOR DUST 18" UNIT	(D-1C2) / BD12A =	0.0170	LB SULFUR/HR
	CARBON WEEPAGE 18" UNIT	(CW-1C2) / BCW12A =	0.0012	LB SULFUR/HR
	CYCLONE DUST 6" UNIT	(D-3C1) / BD301A =	0.0	LB SULFUR/HR
	OUTLET GAS 8" UNIT AS H2S	(G-2C5) / BG205B =	0.6881	LB SULFUR/HR
	OUTLET GAS 8" UNIT AS SO2	(G-2C5) / BG205A =	0.2359	LB SULFUR/HR
	OUTLET GAS 4" UNIT AS H2S	(G-1C4) / BG104B =	0.0	LB SULFUR/HR
	OUTLET GAS 4" UNIT AS S	(G-1C4) / BG104S =	1.6100	LB SULFUR/HR
	CYCLONE DUST 4" UNIT	(D-1C1) / BD101A =	0.0042	LB SULFUR/HR
	FILTER DUST 4" UNIT	(D-1C2) / BD102A =	0.0	LB SULFUR/HR
	TOTAL SULFUR OUT :		2.7258	LB SULFUR/HR

HYDROGEN MATERIAL BALANCE:

SULFUR GENERATOR

IN			
	INLET GAS AS H2	(G-203) / BG203C =	0.0097 LB HYDROGEN/HR
	INLET GAS AS H2S (CYL)	(G-203) / BG203B =	0.0 LB HYDROGEN/HR
	INLET GAS AS H2S (PROC)	(G-203) / BG203 =	0.4793 LB HYDROGEN/HR
	INLET GAS AS H2O	(G-203) / BG203D =	0.1663 LB HYDROGEN/HR
	INLET CARBON	(C-201) / BC201H =	0.4667 LB HYDROGEN/HR
	TOTAL IN:	(RV-200) / HI200 =	1.1420 LB HYDROGEN/HR
OUT			
	OUTLET GAS AS H2	(G-205) / BG205C =	0.0023 LB HYDROGEN/HR
	OUTLET GAS AS H2S	(G-205) / BG205H =	0.0430 LB HYDROGEN/HR
	OUTLET GAS AS H2O	(G-205) / BG205D =	0.8354 LB HYDROGEN/HR
	OUTLET CARBON	(C-202) / BC202H =	0.0219 LB HYDROGEN/HR
	TOTAL OUT:	(RV-200) / HO200 =	0.9026 LB HYDROGEN/HR

H2S GENERATOR/SULFUR STRIPPER

IN			
	INLET GAS AS H2	(G-103) / BG103C =	0.6630 LB HYDROGEN/HR
	INLET CARBON	(C-202) / BC202H =	0.0219 LB HYDROGEN/HR
	TOTAL IN:	(RV-100) / HI100 =	0.6849 LB HYDROGEN/HR
OUT			
	OUTLET GAS AS H2	(G-104) / BG104C =	0.0098 LB HYDROGEN/HR
	OUTLET GAS AS H2S	(G-104) / BG104H =	0.4793 LB HYDROGEN/HR
	OUTLET GAS AS H2O	(G-104) / BG104D =	0.1934 LB HYDROGEN/HR
	TOTAL OUT:	(RV-100) / HO100 =	0.6824 LB HYDROGEN/HR

APPENDIX A-12-2

EXPERIMENTAL DATA AND RESULTS FOR INTEGRAL RUN IR-1-5 (246 - 262 hours)

STATUS REPORT OF OPERATING CONDITIONS FOR INTEGRATED OPERATION OF SO2 RECOVERY PROCESS

OPERATING PERIOD:

DATE: 2/26/73 TIME OF RECORD: 9:15 HRS TO 24: 0 HRS
DATE: 2/27/73 TIME OF RECORD: 0: 0 HRS TO 9:15 HRS

PROCESS ELAPSED TIME OF PERIOD: START 246.00 HRS / END 270.00 HRS LENGTH OF PERIOD: 24.00 HRS

PROCESS VARIABLES FOR OPERATING PERIOD:

S O 2 S C R B E R

13:15 HRS	250.00 HRS (ET)	SO2 CONC INLET FLUE GAS	(GS- 10) / Y10(1,T)	=	2215.000	PPM (VOLUME)
18: 2 HRS	254.80 HRS (ET)	SO2 CONC INLET FLUE GAS	(GS- 10) / Y10(1,T)	=	2090.000	PPM (VOLUME)
21:15 HRS	258.00 HRS (ET)	SO2 CONC INLET FLUE GAS	(GS- 10) / Y10(1,T)	=	2090.000	PPM (VOLUME)
1:15 HRS	262.00 HRS (ET)	SO2 CONC INLET FLUE GAS	(GS- 10) / Y10(1,T)	=	2090.000	PPM (VOLUME)
5:15 HRS	266.00 HRS (ET)	SO2 CONC INLET FLUE GAS	(GS- 10) / Y10(1,T)	=	2140.000	PPM (VOLUME)
A V E R A G E :		SO2 CONC INLET FLUE GAS	(GS- 10) / AY10A	=	2125.000	PPM (VOLUME)
13:15 HRS	250.00 HRS (ET)	SO2 CONC OUTLET FLUE GAS	(GS- 16) / Y16(1,T)	=	125.000	PPM (VOLUME)
18: 2 HRS	254.80 HRS (ET)	SO2 CONC OUTLET FLUE GAS	(GS- 16) / Y16(1,T)	=	125.000	PPM (VOLUME)
21:15 HRS	258.00 HRS (ET)	SO2 CONC OUTLET FLUE GAS	(GS- 16) / Y16(1,T)	=	125.000	PPM (VOLUME)
1:15 HRS	262.00 HRS (ET)	SO2 CONC OUTLET FLUE GAS	(GS- 16) / Y16(1,T)	=	150.000	PPM (VOLUME)
5:15 HRS	266.00 HRS (ET)	SO2 CONC OUTLET FLUE GAS	(GS- 16) / Y16(1,T)	=	143.000	PPM (VOLUME)
A V E R A G E :		SO2 CONC OUTLET FLUE GAS	(GS- 16) / AY16A	=	133.000	PPM (VOLUME)
21:15 HRS	258.00 HRS (ET)	H2O CONC INLET FLUE GAS	(GS- 10) / Y10(4,T)	=	9.800	% (VOLUME)
A V E R A G E :		H2O CONC INLET FLUE GAS	(GS- 10) / AY10D	=	9.800	% (VOLUME)
13:15 HRS	250.00 HRS (ET)	ORIFICE PRESSURE DROP	(DP- 10) / DP10(T)	=	2.400	INCHES H2O
22:15 HRS	259.00 HRS (ET)	ORIFICE PRESSURE DROP	(DP- 10) / DP10(T)	=	2.400	INCHES H2O
6:15 HRS	267.00 HRS (ET)	ORIFICE PRESSURE DROP	(DP- 10) / DP10(T)	=	2.350	INCHES H2O
A V E R A G E :		ORIFICE PRESSURE DROP	(DP- 10) / ADP10	=	2.383	INCHES H2O
13:15 HRS	250.00 HRS (ET)	ORIFICE TEMPERATURE	(TL- 10) / TL10(T)	=	307.000	DEG F
22:15 HRS	259.00 HRS (ET)	ORIFICE TEMPERATURE	(TL- 10) / TL10(T)	=	303.000	DEG F
6:15 HRS	267.00 HRS (ET)	ORIFICE TEMPERATURE	(TL- 10) / TL10(T)	=	302.000	DEG F
A V E R A G E :		ORIFICE TEMPERATURE	(TL- 10) / ATL10	=	304.333	DEG F
11:15 HRS	248.00 HRS (ET)	WEIGHT CYCLONE DUST	(D- 11) / CD11(T)	=	0.0	LB DUST
3:15 HRS	264.00 HRS (ET)	WEIGHT CYCLONE DUST	(D- 11) / CD11(T)	=	4.200	LB DUST
T O T A L :		WEIGHT CYCLONE DUST	(D- 11) / WD11	=	4.200	LB DUST
R A T E :		WEIGHT CYCLONE DUST	(D- 11) / RD11	=	0.262	LB DUST/HR
11:15 HRS	248.00 HRS (ET)	WEIGHT COLLECTOR DUST	(D- 12) / CD12(T)	=	0.0	LB DUST
3:15 HRS	264.00 HRS (ET)	WEIGHT COLLECTOR DUST	(D- 12) / CD12(T)	=	2.700	LB DUST
T O T A L :		WEIGHT COLLECTOR DUST	(D- 12) / WD12	=	2.700	LB DUST
R A T E :		WEIGHT COLLECTOR DUST	(D- 12) / RD12	=	0.169	LB DUST/HR
16:15 HRS	253.00 HRS (ET)	WEIGHT CARBON WEEPAGE	(CW- 12) / CW12(T)	=	0.0	LB DUST
0:15 HRS	261.00 HRS (ET)	WEIGHT CARBON WEEPAGE	(CW- 12) / CW12(T)	=	0.056	LB DUST
T O T A L :		WEIGHT CARBON WEEPAGE	(CW- 12) / WCW12	=	0.056	LB DUST
R A T E :		WEIGHT CARBON WEEPAGE	(CW- 12) / RCW12	=	0.007	LB DUST/HR
11:15 HRS	248.00 HRS (ET)	% TOT S ON CYCLONE DUST	(D- 11) / D11(1,T)	=	7.060	% (WEIGHT)

	A V E R A G E :	% TOT S CN CYCLONE DUST	(D- 11) /	AD11A	=	7.080 % (WEIGHT)
3:15 HRS	0.02 HRS (ET)	% TOT S CN COLLECTOR DUST	(D- 12) /	D12(1,T)	=	7.080 % (WEIGHT)
	A V E R A G E :	% TOT S CN COLLECTOR DUST	(D- 12) /	AD12A	=	7.080 % (WEIGHT)

6" DIA CARBON PRECONDITIONER

17:15 HRS	254.00 HRS (ET)	% TOT S ON INLET CARBON	(CS-301) / Z301(1,T) =	8.440	%	(WEIGHT)
1:15 HRS	262.00 HRS (ET)	% TOT S ON INLET CARBON	(CS-301) / Z301(1,T) =	7.600	%	(WEIGHT)
5:15 HRS	266.00 HRS (ET)	% TOT S ON INLET CARBON	(CS-301) / Z301(1,T) =	8.560	%	(WEIGHT)
	A V E R A G E :	% TOT S ON INLET CARBON	(CS-301) / AZ301A =	8.200	%	(WEIGHT)
17:15 HRS	254.00 HRS (ET)	% H2O ON INLET CARBON	(CS-301) / Z301(2,T) =	7.790	%	(WEIGHT)
1:15 HRS	262.00 HRS (ET)	% H2O ON INLET CARBON	(CS-301) / Z301(2,T) =	7.460	%	(WEIGHT)
5:15 HRS	266.00 HRS (ET)	% H2O ON INLET CARBON	(CS-301) / Z301(2,T) =	6.790	%	(WEIGHT)
	A V E R A G E :	% H2O ON INLET CARBON	(CS-301) / AZ301B =	7.347	%	(WEIGHT)
9:15 HRS	246.00 HRS (ET)	WEIGHT CYCLONE DUST	(D-301) / CD301(T) =	0.0	LB	DUST
9:15 HRS	270.00 HRS (ET)	WEIGHT CYCLONE DUST	(D-301) / CD301(T) =	0.0	LB	DUST
	T O T A L :	WEIGHT CYCLONE DUST	(D-301) / WD301 =	0.0	LB	DUST
	R A T E :	WEIGHT CYCLONE DUST	(D-301) / RD301 =	0.0	LB	DUST/HR
9:15 HRS	270.00 HRS (ET)	% TOT S ON CYCLONE DUST	(D-301) / D301(1,T) =	0.0	%	(WEIGHT)
	A V E R A G E :	% TOT S ON CYCLONE DUST	(D-301) / AD301A =	0.0	%	(WEIGHT)

SULFUR GENERATOR

14:45 HRS	251.50 HRS (ET)	SO2 CONC CUTLET GAS	(GS-206) / Y206(1,T) =	0.960 % (VOLUME)
23: 2 HRS	259.80 HRS (ET)	SO2 CONC CUTLET GAS	(GS-206) / Y206(1,T) =	1.100 % (VOLUME)
	A V E R A G E :	SO2 CONC CUTLET GAS	(GS-206) / AY206A =	1.030 % (VOLUME)
12:32 HRS	249.30 HRS (ET)	H2S CONC INLET GAS	(GS-200) / Y200(2,T) =	28.300 % (VOLUME)
0:15 HRS	261.00 HRS (ET)	H2S CONC INLET GAS	(GS-200) / Y200(2,T) =	25.700 % (VOLUME)
	A V E R A G E :	H2S CONC INLET GAS	(GS-200) / AY200B =	27.000 % (VOLUME)
14:45 HRS	251.50 HRS (ET)	H2S CONC CUTLET GAS	(GS-206) / Y206(2,T) =	1.000 % (VOLUME)
15:26 HRS	600.20 HRS (ET)	H2S CONC CUTLET GAS	(GS-206) / Y206(2,T) =	0.720 % (VOLUME)
	A V E R A G E :	H2S CONC CUTLET GAS	(GS-206) / AY206B =	0.860 % (VOLUME)
12:32 HRS	249.30 HRS (ET)	H2 CONC INLET GAS	(GS-200) / Y200(3,T) =	0.0 % (VOLUME)
0:15 HRS	261.00 HRS (ET)	H2 CONC INLET GAS	(GS-200) / Y200(3,T) =	0.0 % (VOLUME)
	A V E R A G E :	H2 CONC INLET GAS	(GS-200) / AY200C =	0.0 % (VOLUME)
14:45 HRS	251.50 HRS (ET)	H2 CONC CUTLET GAS	(GS-206) / Y206(3,T) =	0.0 % (VOLUME)
23:26 HRS	260.20 HRS (ET)	H2 CONC CUTLET GAS	(GS-206) / Y206(3,T) =	0.0 % (VOLUME)
	A V E R A G E :	H2 CONC CUTLET GAS	(GS-206) / AY206C =	0.0 % (VOLUME)
12:32 HRS	249.30 HRS (ET)	H2O CONC INLET GAS	(GS-200) / Y200(4,T) =	10.200 % (VOLUME)
0:15 HRS	261.00 HRS (ET)	H2O CONC INLET GAS	(GS-200) / Y200(4,T) =	11.200 % (VOLUME)
	A V E R A G E :	H2O CONC INLET GAS	(GS-200) / AY200D =	10.700 % (VOLUME)
14:45 HRS	251.50 HRS (ET)	H2O CONC CUTLET GAS	(GS-206) / Y206(4,T) =	48.300 % (VOLUME)
23:26 HRS	260.20 HRS (ET)	H2O CONC CUTLET GAS	(GS-206) / Y206(4,T) =	48.200 % (VOLUME)
	A V E R A G E :	H2O CONC CUTLET GAS	(GS-206) / AY206D =	48.250 % (VOLUME)
12:32 HRS	249.30 HRS (ET)	N2 CONC INLET GAS	(GS-200) / Y200(5,T) =	58.900 % (VOLUME)
0:15 HRS	261.00 HRS (ET)	N2 CONC INLET GAS	(GS-200) / Y200(5,T) =	58.500 % (VOLUME)
	A V E R A G E :	N2 CONC INLET GAS	(GS-200) / AY200E =	58.700 % (VOLUME)
14:45 HRS	251.50 HRS (ET)	N2 CONC OUTLET GAS	(GS-206) / Y206(5,T) =	49.500 % (VOLUME)
23:26 HRS	260.20 HRS (ET)	N2 CONC OUTLET GAS	(GS-206) / Y206(5,T) =	49.800 % (VOLUME)
	A V E R A G E :	N2 CONC OUTLET GAS	(GS-206) / AY206E =	49.650 % (VOLUME)
9:15 HRS	246.00 HRS (ET)	N2 INLET VOL FLOW RATE	(G-200) / G200(5,T) =	180.000 CFH (70 DEG F)
9:15 HRS	270.00 HRS (ET)	N2 INLET VOL FLOW RATE	(G-200) / G200(5,T) =	180.000 CFH (70 DEG F)
	A V E R A G E :	N2 INLET VOL FLOW RATE	(G-200) / AG200E =	180.000 CFH (70 DEG F)
21:15 HRS	258.00 HRS (ET)	% TOT S ON INLET CARBON	(CS-302) / Z302(1,T) =	8.200 % (WEIGHT)
	A V E R A G E :	% TOT S ON INLET CARBON	(CS-302) / AZ302A =	8.200 % (WEIGHT)
21:15 HRS	258.00 HRS (ET)	% TOT S ON OUTLET CARBON	(CS-200) / Z200(1,T) =	24.000 % (WEIGHT)
	A V E R A G E :	% TOT S ON OUTLET CARBON	(CS-200) / AZ200A =	24.000 % (WEIGHT)
21:15 HRS	258.00 HRS (ET)	% H2O ON INLET CARBON	(CS-302) / Z302(2,T) =	7.350 % (WEIGHT)
	A V E R A G E :	% H2O ON INLET CARBON	(CS-302) / AZ302B =	7.350 % (WEIGHT)
21:15 HRS	258.00 HRS (ET)	% H2O ON OUTLET CARBON	(CS-200) / Z200(2,T) =	0.240 % (WEIGHT)
	A V E R A G E :	% H2O ON OUTLET CARBON	(CS-200) / AZ200B =	0.240 % (WEIGHT)
9:15 HRS	246.00 HRS (ET)	% ACID ON OUTLET CARBON	(CS-200) / Z200(3,T) =	0.940 % (WEIGHT)
17:15 HRS	254.00 HRS (ET)	% ACID ON OUTLET CARBON	(CS-200) / Z200(3,T) =	1.210 % (WEIGHT)
1:15 HRS	262.00 HRS (ET)	% ACID ON OUTLET CARBON	(CS-200) / Z200(3,T) =	1.310 % (WEIGHT)
5:15 HRS	266.00 HRS (ET)	% ACID ON OUTLET CARBON	(CS-200) / Z200(3,T) =	1.100 % (WEIGHT)
	A V E R A G E :	% ACID ON OUTLET CARBON	(CS-200) / AZ200C =	1.140 % (WEIGHT)

H2S GENERATOR/SULFUR STRIPPER

11: 8 HRS	247.90 HRS (ET)	H2 CONC INLET GAS	(GS-100) / Y100(3,T) =	42.900	% (VOLUME)
15: 8 HRS	251.90 HRS (ET)	H2 CONC INLET GAS	(GS-100) / Y100(3,T) =	43.700	% (VOLUME)
1:26 HRS	262.20 HRS (ET)	H2 CONC INLET GAS	(GS-100) / Y100(3,T) =	43.000	% (VOLUME)
	A V E R A G E :	H2 CONC INLET GAS	(GS-100) / AY100C =	43.200	% (VOLUME)
12:32 HRS	249.30 HRS (ET)	H2 CONC OUTLET GAS	(GS-108) / Y108(3,T) =	0.0	% (VOLUME)
0:15 HRS	261.00 HRS (ET)	H2 CONC OUTLET GAS	(GS-108) / Y108(3,T) =	0.0	% (VOLUME)
	A V E R A G E :	H2 CONC OUTLET GAS	(GS-108) / AY108C =	0.0	% (VOLUME)
11: 8 HRS	247.90 HRS (ET)	N2 CONC INLET GAS	(GS-100) / Y100(5,T) =	57.100	% (VOLUME)
15: 8 HRS	251.90 HRS (ET)	N2 CONC INLET GAS	(GS-100) / Y100(5,T) =	56.300	% (VOLUME)
1:26 HRS	262.20 HRS (ET)	N2 CONC INLET GAS	(GS-100) / Y100(5,T) =	58.000	% (VOLUME)
	A V E R A G E :	N2 CONC INLET GAS	(GS-100) / AY100E =	57.133	% (VOLUME)
12:32 HRS	249.30 HRS (ET)	N2 CONC OUTLET GAS	(GS-108) / Y108(5,T) =	58.900	% (VOLUME)
0:15 HRS	261.00 HRS (ET)	N2 CONC OUTLET GAS	(GS-108) / Y108(5,T) =	58.500	% (VOLUME)
	A V E R A G E :	N2 CONC OUTLET GAS	(GS-108) / AY108E =	58.700	% (VOLUME)
12:32 HRS	249.30 HRS (ET)	H2S CONC OUTLET GAS	(GS-108) / Y108(2,T) =	28.300	% (VOLUME)
0:15 HRS	261.00 HRS (ET)	H2S CONC OUTLET GAS	(GS-108) / Y108(2,T) =	25.700	% (VOLUME)
	A V E R A G E :	H2S CONC OUTLET GAS	(GS-108) / AY108B =	27.000	% (VOLUME)
12:32 HRS	249.30 HRS (ET)	H2O CONC OUTLET GAS	(GS-108) / Y108(4,T) =	10.200	% (VOLUME)
0:15 HRS	261.00 HRS (ET)	H2O CONC OUTLET GAS	(GS-108) / Y108(4,T) =	11.200	% (VOLUME)
	A V E R A G E :	H2O CONC OUTLET GAS	(GS-108) / AY108D =	10.700	% (VOLUME)
13:15 HRS	250.00 HRS (ET)	N2 INLET VOL FLOW RATE	(G-100) / G100(5,T) =	175.000	CFH (70 DEG F)
19:15 HRS	256.00 HRS (ET)	N2 INLET VOL FLOW RATE	(G-100) / G100(5,T) =	175.000	CFH (70 DEG F)
1:15 HRS	262.00 HRS (ET)	N2 INLET VOL FLOW RATE	(G-100) / G100(5,T) =	175.000	CFH (70 DEG F)
	A V E R A G E :	N2 INLET VOL FLOW RATE	(G-100) / AG100E =	175.000	CFH (70 DEG F)
12:15 HRS	249.00 HRS (ET)	WEIGHT CYCLONE DUST	(D-101) / CD101(T) =	0.0	LB DUST
16:15 HRS	253.00 HRS (ET)	WEIGHT CYCLONE DUST	(D-101) / CD101(T) =	0.055	LB DUST
20:15 HRS	257.00 HRS (ET)	WEIGHT CYCLONE DUST	(D-101) / CD101(T) =	0.070	LB DUST
0:15 HRS	261.00 HRS (ET)	WEIGHT CYCLONE DUST	(D-101) / CD101(T) =	0.064	LB DUST
4:15 HRS	265.00 HRS (ET)	WEIGHT CYCLONE DUST	(D-101) / CD101(T) =	0.066	LB DUST
	T O T A L :	WEIGHT CYCLONE DUST	(D-101) / WD101 =	0.255	LB DUST
	R A T E :	WEIGHT CYCLONE DUST	(D-101) / RD101 =	0.016	LB DUST/HR
9:15 HRS	246.00 HRS (ET)	WEIGHT FILTER DUST	(D-102) / CD102(T) =	0.0	LB DUST
9:15 HRS	270.00 HRS (ET)	WEIGHT FILTER DUST	(D-102) / CD102(T) =	0.0	LB DUST
	T O T A L :	WEIGHT FILTER DUST	(D-102) / WD102 =	0.0	LB DUST
	R A T E :	WEIGHT FILTER DUST	(D-102) / RD102 =	0.0	LB DUST/HR
3:15 HRS	0.0 HRS (ET)	% TOT S ON CYCLONE DUST	(D-101) / D101(1,T) =	24.000	% (WEIGHT)
	A V E R A G E :	% TOT S ON CYCLONE DUST	(D-101) / AD101A =	24.000	% (WEIGHT)
21:15 HRS	258.00 HRS (ET)	% TOT S ON FILTER DUST	(D-102) / D102(1,T) =	24.000	% (WEIGHT)
	A V E R A G E :	% TOT S ON FILTER DUST	(D-102) / AD102A =	24.000	% (WEIGHT)

CARBON INVENTORY HOPPER

21:15 HRS	258.00 HRS (ET)	% RESIDUAL S ON CARBON	(CS- 90) /	Z90(1,T) =	3.190 % (WEIGHT)
	AVERAGE :	% RESIDUAL S ON CARBON	(CS- 90) /	AZ90A =	3.190 % (WEIGHT)
21:15 HRS	258.00 HRS (ET)	% RESIDUAL H2O ON CARBON	(CS- 90) /	Z90(2,T) =	0.300 % (WEIGHT)
	AVERAGE :	% RESIDUAL H2O ON CARBON	(CS- 90) /	AZ90B =	0.300 % (WEIGHT)
21:15 HRS	258.00 HRS (ET)	CARBON RECYCLE RATE	(C- 90) /	C90(1,T) =	31.000 LB MAT'L/HR
	AVERAGE :	CARBON RECYCLE RATE	(C- 90) /	AC90A =	31.000 LB MAT'L/HR

SULFUR CONDENSER

9:15 HRS	246.00 HRS (ET)	WEIGHT SULFUR COLLECTED	(S-401) /	S401(T) =	0.0 LB SULFUR
13:15 HRS	250.00 HRS (ET)	WEIGHT SULFUR COLLECTED	(S-401) /	S401(T) =	7.100 LB SULFUR
17:15 HRS	254.00 HRS (ET)	WEIGHT SULFUR COLLECTED	(S-401) /	S401(T) =	7.800 LB SULFUR
21:15 HRS	258.00 HRS (ET)	WEIGHT SULFUR COLLECTED	(S-401) /	S401(T) =	7.400 LB SULFUR
	TOTAL :	WEIGHT SULFUR COLLECTED	(S-401) /	WS401 =	22.300 LB SULFUR
	RATE :	WEIGHT SULFUR COLLECTED	(S-401) /	RS401 =	1.858 LB SULFUR/HR

STATUS REPORT OF OPERATING CONDITIONS FOR INTEGRATED OPERATION OF SO2 RECOVERY PROCESS

OPERATING PERIOD:

DATE: 2/26/73 TIME OF RECORD: 9:15 HRS TO 24: 0 HRS
DATE: 2/27/73 TIME OF RECORD: 0: 0 HRS TO 9:15 HRS

PROCESS ELAPSED TIME OF PERIOD: START 246.00 HRS / END 270.00 HRS LENGTH OF PERIOD: 24.00 HRS

SUMMARY OF INTEGRATED PROCESS PERFORMANCE:

1.	SO2 REMOVAL	PRSO2 =	93.71 % (ACTUAL)	90.0 % (GOAL)
2.	H2S UTILIZATION	PUH2S =	96.23 % (ACTUAL)	95.0 % (GOAL)
3.	ACID CONVERSION (TO SULFUR)	PVCS =	87.96 % (ACTUAL)	99.0 % (GOAL)
4.	H2 UTILIZATION (TO H2S)	PHCHS =	69.39 % (ACTUAL)	50.0 % (GOAL)
5.	SULFUR RECOVERY	PRS =	77.43 % (ACTUAL) 21.64 % (ACTUAL)	100.0 % (GOAL) OF SCRBED SO2 25.0 % (GOAL) OF STRIPPED SULFUR
6.	H2 UTILIZATION 4" UNIT	PUH2 =	100.00 %	
7.	RESIDUAL SULFUR ON CARBON	X90A =	0.0331 LB S/LB C	
8.	CARBON RECYCLE RATE (DB)	RC90 =	29.918 LB C(DB)/HR	
9.	ACID LOADING INLET CARBON 6" UNIT	X301C =	0.2453 LB ACID/LB C	
10.	MOISTURE CONTENT INLET CARBON 6" UNIT	X301B =	0.1014 LB H2O/LB C	
11.	ACID LOADING INLET CARBON 8" UNIT	X302C =	0.2453 LB ACID/LB C	
12.	MOISTURE CONTENT INLET CARBON 8" UNIT	X302B =	0.1014 LB H2O/LB C	
13.	TOTAL ACID CONVERTED 8" UNIT	PVC =	93.80 %	
14.	SULFUR CONVERSION (TO H2S)	PSCHS =	77.72 %	
15.	SULFUR CONDENSER EFFICIENCY	ERV400=	97.14 %	

MAJOR EVENTS DURING OPERATING PERIOD:

AT START OF PERIOD CUT H2 FLOW TO 120 CFH FROM 132 CFH

STATUS REPORT OF OPERATING CONDITIONS FOR INTEGRATED OPERATION OF SO2 RECOVERY PROCESS

OPERATING PERIOD:

DATE: 2/26/73 TIME OF RECORD: 9:15 HRS TO 24: 0 HRS
DATE: 2/27/73 TIME OF RECORD: 0: 0 HRS TO 9:15 HRS

PROCESS ELAPSED TIME OF PERIOD: START 246.00 HRS / END 270.00 HRS LENGTH OF PERIOD: 24.00 HRS

SULFUR MATERIAL BALANCE (USING PROCESS H2S):

S O 2 S C R B E R

I N			
INLET GAS AS SO2	(G- 13) / BG10A =	2.5609	LB SULFUR/HR
INLET C AS RESIDUAL S	(C- 11) / BC11A =	0.9889	LB SULFUR/HR
T O T A L I N :	(RV- 10) / SI10 =	3.5498	LB SULFUR/HR
O U T			
OUTLET GAS AS SO2	(G- 13 / BG13A =	0.1610	LB SULFUR/HR
OUTLET CARBON	(C- 12) / BC12A =	3.3849	LB SULFUR/HR
CYCLONE DUST	(D- 11) / BD11A =	0.0186	LB SULFUR/HR
COLLECTOR DUST	(C- 12) / BD12A =	0.0119	LB SULFUR/HR
CARBON WEEPAGE	(CW- 12) / BCW12A =	0.0008	LB SULFUR/HR
T O T A L O U T :	(RV- 10) / SO10 =	3.5772	LB SULFUR/HR

6" D I A C A R B O N P R E C O N D I T I O N E R

I N			
INLET CARBON	(C- 12) / BC12A =	3.3849	LB SULFUR/HR
T O T A L I N :	(RV-300) / SI300 =	3.3849	LB SULFUR/HR
O U T			
OUTLET CARBON	(C-201) / BC201A =	3.3849	LB SULFUR/HR
CYCLONE DUST	(D-301) / BD301A =	0.0	LB SULFUR/HR
T O T A L O U T :	(RV-300) / SO300 =	3.3849	LB SULFUR/HR

S U L F U R G E N E R A T O R

I N			
INLET GAS AS H2S (CYL)	(G-201) / BG201B =	0.0	LB SULFUR/HR
INLET GAS AS H2S (PROC)	(G-201) / BG203R =	6.6729	LB SULFUR/HR
INLET CARBON	(C-201) / BC201A =	3.3849	LB SULFUR/HR
T O T A L I N :	(RV-200) / SI200 =	10.0579	LB SULFUR/HR
O U T			
OUTLET GAS AS H2S	(G-205) / BG205B =	0.2513	LB SULFUR/HR
OUTLET GAS AS SO2	(G-205) / BG205A =	0.3010	LB SULFUR/HR
OUTLET CARBON	(C-202) / BC202A =	9.5749	LB SULFUR/HR
T O T A L O U T :	(RV-200) / SO200 =	10.1271	LB SULFUR/HR

H2S GENERATOR/SULFUR STRIPPER

IN				
	INLET CARBON	(C-2(2) /	BC202A =	9.5749 LB SULFUR/HR
	TOTAL IN:	(RV-1(C) /	SI100 =	9.5749 LB SULFUR/HR
OUT				
	OUTLET CARBON	(C-1(3) /	BC103A =	0.9889 LB SULFUR/HR
	OUTLET GAS AS H2S	(G-1(4) /	BG104B =	6.6729 LB SULFUR/HR
	OUTLET GAS AS S	(G-1(4) /	BG104S =	1.8583 LB SULFUR/HR
	CYCLONE DUST	(D-1(1) /	BD101A =	0.0038 LB SULFUR/HR
	FILTER DUST	(D-1(2) /	BD102A =	0.0 LB SULFUR/HR
	TOTAL OUT:	(RV-1(C) /	SO100 =	9.5240 LB SULFUR/HR

OVERALL SULFUR BALANCE

IN				
	INLET GAS 18" UNIT AS SO2	(G- 1(1) /	BG10A =	2.5609 LB SULFUR/HR
	INLET GAS 8" UNIT AS CYL H2S	(G-2(1) /	BG201B =	0.0 LB SULFUR/HR
	TOTAL SULFUR IN:			2.5609 LB SULFUR/HR
OUT				
	OUTLET GAS 18" UNIT AS SO2	(G- 13) /	BG13A =	0.1610 LB SULFUR/HR
	CYCLONE DUST 18" UNIT	(D- 11) /	BD11A =	0.0186 LB SULFUR/HR
	COLLECTOR DUST 18" UNIT	(D- 12) /	BD12A =	0.0119 LB SULFUR/HR
	CARBON WEEPAGE 18" UNIT	(CW- 12) /	BCW12A =	0.0008 LB SULFUR/HR
	CYCLONE DUST 6" UNIT	(D-3(1) /	BD301A =	0.0 LB SULFUR/HR
	OUTLET GAS 8" UNIT AS H2S	(G-2(5) /	BG205B =	0.2513 LB SULFUR/HR
	OUTLET GAS 8" UNIT AS SO2	(G-2(5) /	BG205A =	0.3010 LB SULFUR/HR
	OUTLET GAS 4" UNIT AS H2S	(G-1(4) /	BG104B =	0.0 LB SULFUR/HR
	OUTLET GAS 4" UNIT AS S	(G-1(4) /	BG104S =	1.8583 LB SULFUR/HR
	CYCLONE DUST 4" UNIT	(D-1(1) /	BD101A =	0.0038 LB SULFUR/HR
	FILTER DUST 4" UNIT	(D-1(2) /	BD102A =	0.0 LB SULFUR/HR
	TOTAL SULFUR OUT:			2.6067 LB SULFUR/HR

HYDROGEN MATERIAL BALANCE:

SULFUR GENERATOR

IN				
	INLET GAS AS H2	(G-203) / BG203C =	0.0	LB HYDROGEN/HR
	INLET GAS AS H2S (CYL)	(G-203) / BG203B =	0.0	LB HYDROGEN/HR
	INLET GAS AS H2S (PROC)	(G-203) / BG203 =	0.4170	LB HYDROGEN/HR
	INLET GAS AS H2O	(G-203) / BG203D =	0.1652	LB HYDROGEN/HR
	INLET CARBON	(C-201) / BC201H =	0.4869	LB HYDROGEN/HR
	TOTAL IN:	(RV-200) / HI200 =	1.0691	LB HYDROGEN/HR
OUT				
	OUTLET GAS AS H2	(G-205) / BG205C =	0.0	LB HYDROGEN/HR
	OUTLET GAS AS H2S	(G-205) / BG205H =	0.0157	LB HYDROGEN/HR
	OUTLET GAS AS H2O	(G-205) / BG205D =	0.8809	LB HYDROGEN/HR
	OUTLET CARBON	(C-202) / BC202H =	0.0199	LB HYDROGEN/HR
	TOTAL OUT:	(RV-200) / HO200 =	0.9166	LB HYDROGEN/HR

H2S GENERATOR/SULFUR STRIPPER

IN				
	INLET GAS AS H2	(G-103) / BG103C =	0.6009	LB HYDROGEN/HR
	INLET CARBON	(C-202) / BC202H =	0.0199	LB HYDROGEN/HR
	TOTAL IN:	(RV-100) / HI100 =	0.6208	LB HYDROGEN/HR
OUT				
	OUTLET GAS AS H2	(G-104) / BG104C =	0.0	LB HYDROGEN/HR
	OUTLET GAS AS H2S	(G-104) / BG104H =	0.4170	LB HYDROGEN/HR
	OUTLET GAS AS H2O	(G-104) / BG104D =	0.1652	LB HYDROGEN/HR
	TOTAL OUT:	(RV-100) / HO100 =	0.5822	LB HYDROGEN/HR

APPENDIX A-12-3

EXPERIMENTAL DATA AND RESULTS FOR INTEGRAL RUN IR-2-6 (37 - 51 hours)

STATUS REPORT OF OPERATING CONDITIONS FOR INTEGRATED OPERATION OF SO2 RECOVERY PROCESS

OPERATING PERIOD:

DATE: 4/21/74 TIME OF RECORD: 16:15 HRS TO 24: 0 HRS
DATE: 4/22/74 TIME OF RECORD: 0: 0 HRS TO 6:15 HRS

PROCESS ELAPSED TIME OF PERIOD: START 37.00 HRS / END 51.00 HRS LENGTH OF PERIOD: 14.00 HRS

PROCESS VARIABLES FOR OPERATING PERIOD:

S O 2 S C R B E R

16: 2 HRS	38.60 HRS (ET)	SO2 CONC INLET FLUE GAS	(GS- 10) / Y10(1,T)	=	2175.000	PPM (VOLUME)
18:15 HRS	39.00 HRS (ET)	SO2 CONC INLET FLUE GAS	(GS- 10) / Y10(1,T)	=	2100.000	PPM (VOLUME)
22:15 HRS	43.00 HRS (ET)	SO2 CONC INLET FLUE GAS	(GS- 10) / Y10(1,T)	=	2125.000	PPM (VOLUME)
2:15 HRS	47.00 HRS (ET)	SO2 CONC INLET FLUE GAS	(GS- 10) / Y10(1,T)	=	2106.000	PPM (VOLUME)
6:15 HRS	51.00 HRS (ET)	SO2 CONC INLET FLUE GAS	(GS- 10) / Y10(1,T)	=	2087.000	PPM (VOLUME)
	A V E R A G E :	SO2 CONC INLET FLUE GAS	(GS- 10) / AY10A	=	2118.600	PPM (VOLUME)
20:32 HRS	41.30 HRS (ET)	SO2 CONC OUTLET FLUE GAS	(GS- 16) / Y16(1,T)	=	40.000	PPM (VOLUME)
22:15 HRS	43.00 HRS (ET)	SO2 CONC OUTLET FLUE GAS	(GS- 16) / Y16(1,T)	=	40.000	PPM (VOLUME)
2:15 HRS	47.00 HRS (ET)	SO2 CONC OUTLET FLUE GAS	(GS- 16) / Y16(1,T)	=	50.000	PPM (VOLUME)
6:15 HRS	51.00 HRS (ET)	SO2 CONC OUTLET FLUE GAS	(GS- 16) / Y16(1,T)	=	58.000	PPM (VOLUME)
	A V E R A G E :	SO2 CONC OUTLET FLUE GAS	(GS- 16) / AY16A	=	47.000	PPM (VOLUME)
16:15 HRS	37.00 HRS (ET)	H2O CONC INLET FLUE GAS	(GS- 10) / Y10(4,T)	=	10.000	% (VOLUME)
6:15 HRS	51.00 HRS (ET)	H2O CONC INLET FLUE GAS	(GS- 10) / Y10(4,T)	=	10.000	% (VOLUME)
	A V E R A G E :	H2O CONC INLET FLUE GAS	(GS- 10) / AY10D	=	10.000	% (VOLUME)
18:15 HRS	39.00 HRS (ET)	ORIFICE PRESSURE DROP	(DP- 10) / DP10(T)	=	2.200	INCHES H2O
2:15 HRS	47.00 HRS (ET)	ORIFICE PRESSURE DROP	(DP- 10) / DP10(T)	=	2.200	INCHES H2O
10:15 HRS	55.00 HRS (ET)	ORIFICE PRESSURE DROP	(DP- 10) / DP10(T)	=	2.200	INCHES H2O
	A V E R A G E :	ORIFICE PRESSURE DROP	(DP- 10) / ADP10	=	2.200	INCHES H2O
20:26 HRS	41.20 HRS (ET)	ORIFICE TEMPERATURE	(TL- 10) / TL10(T)	=	314.000	DEG F
21:26 HRS	42.20 HRS (ET)	ORIFICE TEMPERATURE	(TL- 10) / TL10(T)	=	315.000	DEG F
22:50 HRS	43.60 HRS (ET)	ORIFICE TEMPERATURE	(TL- 10) / TL10(T)	=	317.000	DEG F
0:45 HRS	45.50 HRS (ET)	ORIFICE TEMPERATURE	(TL- 10) / TL10(T)	=	319.000	DEG F
2:15 HRS	47.00 HRS (ET)	ORIFICE TEMPERATURE	(TL- 10) / TL10(T)	=	318.000	DEG F
6:15 HRS	51.00 HRS (ET)	ORIFICE TEMPERATURE	(TL- 10) / TL10(T)	=	318.000	DEG F
	A V E R A G E :	ORIFICE TEMPERATURE	(TL- 10) / ATL10	=	316.833	DEG F
4:15 HRS	25.00 HRS (ET)	WEIGHT CYCLONE DUST	(D- 11) / CD11(T)	=	0.0	LB DUST
12:15 HRS	33.00 HRS (ET)	WEIGHT CYCLONE DUST	(D- 11) / CD11(T)	=	2.000	LB DUST
20:15 HRS	41.00 HRS (ET)	WEIGHT CYCLONE DUST	(D- 11) / CD11(T)	=	2.000	LB DUST
4:15 HRS	49.00 HRS (ET)	WEIGHT CYCLONE DUST	(D- 11) / CD11(T)	=	2.400	LB DUST
	T O T A L :	WEIGHT CYCLONE DUST	(D- 11) / WD11	=	6.400	LB DUST
	R A T E :	WEIGHT CYCLONE DUST	(D- 11) / RD11	=	0.267	LB DUST/HR
4:15 HRS	25.00 HRS (ET)	WEIGHT COLLECTOR DUST	(D- 12) / CD12(T)	=	0.0	LB DUST
12:15 HRS	33.00 HRS (ET)	WEIGHT COLLECTOR DUST	(D- 12) / CD12(T)	=	5.000	LB DUST
	T O T A L :	WEIGHT COLLECTOR DUST	(D- 12) / WD12	=	5.000	LB DUST
	R A T E :	WEIGHT COLLECTOR DUST	(D- 12) / RD12	=	0.625	LB DUST/HR
4:15 HRS	25.00 HRS (ET)	WEIGHT CARBON WEEPAGE	(CW- 12) / CW12(T)	=	0.0	LB DUST

12:15 HRS	33.00 HRS (ET)	WEIGHT CARBON WEEPAGE	(CW- 12) / CW12(T)	=	1.000 LB DUST
4:15 HRS	49.00 HRS (ET)	WEIGHT CARBON WEEPAGE	(CW- 12) / CW12(T)	=	0.180 LB DUST
	T O T A L :	WEIGHT CARBON WEEPAGE	(CW- 12) / WCW12	=	1.180 LB DUST
	R A T E :	WEIGHT CARBON WEEPAGE	(CW- 12) / RCW12	=	0.049 LB DUST/HR
20:15 HRS	41.00 HRS (ET)	% TOT S ON CYCLONE DUST	(D- 11) / D11(1,T)	=	4.640 % (WEIGHT)
4:15 HRS	49.00 HRS (ET)	% TOT S ON CYCLONE DUST	(D- 11) / D11(1,T)	=	6.300 % (WEIGHT)
	A V E R A G E :	% TOT S ON CYCLONE DUST	(D- 11) / AD11A	=	5.470 % (WEIGHT)
16:15 HRS	37.00 HRS (ET)	% TOT S ON COLLECTOR DUST	(D- 12) / D12(1,T)	=	0.0 % (WEIGHT)
6:15 HRS	51.00 HRS (ET)	% TOT S ON COLLECTOR DUST	(D- 12) / D12(1,T)	=	0.0 % (WEIGHT)
	A V E R A G E :	% TOT S ON COLLECTOR DUST	(D- 12) / AD12A	=	0.0 % (WEIGHT)

6" DIA CARBON PRECONDITIONER

21:15 HRS	42.00 HRS (ET)	% TOT S ON INLET CARBON	(CS-301) / Z301(1,T) =	6.340	% (WEIGHT)
1:15 HRS	46.00 HRS (ET)	% TOT S ON INLET CARBON	(CS-301) / Z301(1,T) =	7.940	% (WEIGHT)
5:15 HRS	50.00 HRS (ET)	% TOT S ON INLET CARBON	(CS-301) / Z301(1,T) =	8.060	% (WEIGHT)
	A V E R A G E :	% TOT S ON INLET CARBON	(CS-301) / AZ301A =	7.447	% (WEIGHT)
21:15 HRS	42.00 HRS (ET)	% H2O ON INLET CARBON	(CS-301) / Z301(2,T) =	10.700	% (WEIGHT)
1:15 HRS	46.00 HRS (ET)	% H2O ON INLET CARBON	(CS-301) / Z301(2,T) =	6.800	% (WEIGHT)
5:15 HRS	50.00 HRS (ET)	% H2O ON INLET CARBON	(CS-301) / Z301(2,T) =	13.000	% (WEIGHT)
	A V E R A G E :	% H2O ON INLET CARBON	(CS-301) / AZ301B =	10.167	% (WEIGHT)
4:15 HRS	25.00 HRS (ET)	WEIGHT CYCLONE DUST	(D-301) / CD301(T) =	0.0	LB DUST
12:15 HRS	33.00 HRS (ET)	WEIGHT CYCLONE DUST	(D-301) / CD301(T) =	0.0	LB DUST
	T O T A L :	WEIGHT CYCLONE DUST	(D-301) / WD301 =	0.0	LB DUST
	R A T E :	WEIGHT CYCLONE DUST	(D-301) / RD301 =	0.0	LB DUST/HR
16:15 HRS	37.00 HRS (ET)	% TOT S ON CYCLONE DUST	(D-301) / D301(1,T) =	0.0	% (WEIGHT)
6:15 HRS	51.00 HRS (ET)	% TOT S ON CYCLONE DUST	(D-301) / D301(1,T) =	0.0	% (WEIGHT)
	A V E R A G E :	% TOT S ON CYCLONE DUST	(D-301) / AD301A =	0.0	% (WEIGHT)

S U L F U R G E N E R A T O R

23:50 HRS	44.60 HRS (ET)	SO2 CONC OUTLET GAS	(GS-206) / Y206(1,T) =	0.700	% (VOLUME)
5:38 HRS	50.40 HRS (ET)	SO2 CONC OUTLET GAS	(GS-206) / Y206(1,T) =	0.990	% (VOLUME)
	A V E R A G E :	SO2 CONC OUTLET GAS	(GS-206) / AY206A =	0.845	% (VOLUME)
20:15 HRS	41.00 HRS (ET)	H2S CONC INLET GAS	(GS-200) / Y200(2,T) =	47.500	% (VOLUME)
1:15 HRS	46.00 HRS (ET)	H2S CONC INLET GAS	(GS-200) / Y200(2,T) =	46.900	% (VOLUME)
8: 2 HRS	52.80 HRS (ET)	H2S CONC INLET GAS	(GS-200) / Y200(2,T) =	47.200	% (VOLUME)
	A V E R A G E :	H2S CONC INLET GAS	(GS-200) / AY200B =	47.200	% (VOLUME)
23:50 HRS	44.60 HRS (ET)	H2S CONC OUTLET GAS	(GS-206) / Y206(2,T) =	7.500	% (VOLUME)
5:38 HRS	50.40 HRS (ET)	H2S CONC OUTLET GAS	(GS-206) / Y206(2,T) =	5.800	% (VOLUME)
	A V E R A G E :	H2S CONC OUTLET GAS	(GS-206) / AY206B =	6.650	% (VOLUME)
20:15 HRS	41.00 HRS (ET)	H2 CONC INLET GAS	(GS-200) / Y200(3,T) =	0.0	% (VOLUME)
1:15 HRS	46.00 HRS (ET)	H2 CONC INLET GAS	(GS-200) / Y200(3,T) =	0.0	% (VOLUME)
8: 2 HRS	52.80 HRS (ET)	H2 CONC INLET GAS	(GS-200) / Y200(3,T) =	0.0	% (VOLUME)
	A V E R A G E :	H2 CONC INLET GAS	(GS-200) / AY200C =	0.0	% (VOLUME)
23:50 HRS	44.60 HRS (ET)	H2 CONC OUTLET GAS	(GS-206) / Y206(3,T) =	0.0	% (VOLUME)
5:38 HRS	50.40 HRS (ET)	H2 CONC OUTLET GAS	(GS-206) / Y206(3,T) =	0.0	% (VOLUME)
	A V E R A G E :	H2 CONC OUTLET GAS	(GS-206) / AY206C =	0.0	% (VOLUME)
20:15 HRS	41.00 HRS (ET)	H2O CONC INLET GAS	(GS-200) / Y200(4,T) =	0.0	% (VOLUME)
1:15 HRS	46.00 HRS (ET)	H2O CONC INLET GAS	(GS-200) / Y200(4,T) =	0.0	% (VOLUME)
8: 2 HRS	52.80 HRS (ET)	H2O CONC INLET GAS	(GS-200) / Y200(4,T) =	0.0	% (VOLUME)
	A V E R A G E :	H2O CONC INLET GAS	(GS-200) / AY200D =	0.0	% (VOLUME)
23:50 HRS	44.60 HRS (ET)	H2O CONC OUTLET GAS	(GS-206) / Y206(4,T) =	48.000	% (VOLUME)
5:38 HRS	50.40 HRS (ET)	H2O CONC OUTLET GAS	(GS-206) / Y206(4,T) =	49.800	% (VOLUME)
	A V E R A G E :	H2O CONC OUTLET GAS	(GS-206) / AY206D =	48.900	% (VOLUME)
20:15 HRS	41.00 HRS (ET)	N2 CONC INLET GAS	(GS-200) / Y200(5,T) =	52.500	% (VOLUME)
1:15 HRS	46.00 HRS (ET)	N2 CONC INLET GAS	(GS-200) / Y200(5,T) =	53.100	% (VOLUME)
8: 2 HRS	52.80 HRS (ET)	N2 CONC INLET GAS	(GS-200) / Y200(5,T) =	52.800	% (VOLUME)
	A V E R A G E :	N2 CONC INLET GAS	(GS-200) / AY200E =	52.800	% (VOLUME)
23:50 HRS	44.60 HRS (ET)	N2 CONC OUTLET GAS	(GS-206) / Y206(5,T) =	43.800	% (VOLUME)
5:38 HRS	50.40 HRS (ET)	N2 CONC OUTLET GAS	(GS-206) / Y206(5,T) =	43.400	% (VOLUME)
	A V E R A G E :	N2 CONC OUTLET GAS	(GS-206) / AY206E =	43.600	% (VOLUME)
16:15 HRS	37.00 HRS (ET)	N2 INLET VOL FLOW RATE	(G-200) / G200(5,T) =	106.000	CFH (70 DEG F)
6:15 HRS	51.00 HRS (ET)	N2 INLET VOL FLOW RATE	(G-200) / G200(5,T) =	106.000	CFH (70 DEG F)
	A V E R A G E :	N2 INLET VOL FLOW RATE	(G-200) / AG200E =	106.000	CFH (70 DEG F)
0:15 HRS	45.00 HRS (ET)	% TOT S ON INLET CARBON	(CS-302) / Z302(1,T) =	6.340	% (WEIGHT)
1:15 HRS	46.00 HRS (ET)	% TOT S ON INLET CARBON	(CS-302) / Z302(1,T) =	7.940	% (WEIGHT)
5:15 HRS	50.00 HRS (ET)	% TOT S ON INLET CARBON	(CS-302) / Z302(1,T) =	8.060	% (WEIGHT)
	A V E R A G E :	% TOT S ON INLET CARBON	(CS-302) / AZ302A =	7.447	% (WEIGHT)
21:15 HRS	42.00 HRS (ET)	% TOT S ON OUTLET CARBON	(CS-200) / Z200(1,T) =	6.040	% (WEIGHT)
1:15 HRS	46.00 HRS (ET)	% TOT S ON OUTLET CARBON	(CS-200) / Z200(1,T) =	22.900	% (WEIGHT)
5:15 HRS	50.00 HRS (ET)	% TOT S ON OUTLET CARBON	(CS-200) / Z200(1,T) =	22.640	% (WEIGHT)
	A V E R A G E :	% TOT S ON OUTLET CARBON	(CS-200) / AZ200A =	17.193	% (WEIGHT)
21:15 HRS	42.00 HRS (ET)	% H2O ON INLET CARBON	(CS-302) / Z302(2,T) =	10.700	% (WEIGHT)
1:15 HRS	46.00 HRS (ET)	% H2O ON INLET CARBON	(CS-302) / Z302(2,T) =	6.000	% (WEIGHT)
5:15 HRS	50.00 HRS (ET)	% H2O ON INLET CARBON	(CS-302) / Z302(2,T) =	13.000	% (WEIGHT)

	A V E R A G E :	% H2O ON INLET CARBON	(CS-302) / AZ302B =	10.167 % (WEIGHT)
21:15 HRS	42.00 HRS (ET)	% H2O ON OUTLET CARBON	(CS-200) / Z200(2,T) =	3.700 % (WEIGHT)
1:15 HRS	46.00 HRS (ET)	% H2O ON OUTLET CARBON	(CS-200) / Z200(2,T) =	1.400 % (WEIGHT)
5:15 HRS	50.00 HRS (ET)	% H2O ON OUTLET CARBON	(CS-200) / Z200(2,T) =	1.100 % (WEIGHT)
	A V E R A G E :	% H2O ON OUTLET CARBON	(CS-200) / AZ200B =	2.067 % (WEIGHT)
21:15 HRS	42.00 HRS (ET)	% ACID ON OUTLET CARBON	(CS-200) / Z200(3,T) =	0.073 % (WEIGHT)
1:15 HRS	46.00 HRS (ET)	% ACID ON OUTLET CARBON	(CS-200) / Z200(3,T) =	0.370 % (WEIGHT)
5:15 HRS	50.00 HRS (ET)	% ACID ON OUTLET CARBON	(CS-200) / Z200(3,T) =	0.510 % (WEIGHT)
	A V E R A G E :	% ACID ON OUTLET CARBON	(CS-200) / AZ200C =	0.318 % (WEIGHT)

H2S GENERATOR/SULFUR STRIPPER

22:26 HRS	43.20 HRS (ET)	H2 CONC INLET GAS	(GS-100) / Y100(3,T) =	49.400	% (VOLUME)
4:15 HRS	49.00 HRS (ET)	H2 CONC INLET GAS	(GS-100) / Y100(3,T) =	49.500	% (VOLUME)
	A V E R A G E :	H2 CONC INLET GAS	(GS-100) / AY100C =	49.450	% (VOLUME)
14:32 HRS	59.30 HRS (ET)	H2 CONC OUTLET GAS	(GS-108) / Y108(3,T) =	0.0	% (VOLUME)
	A V E R A G E :	H2 CONC OUTLET GAS	(GS-108) / AY108C =	0.0	% (VOLUME)
22:26 HRS	43.20 HRS (ET)	N2 CONC INLET GAS	(GS-100) / Y100(5,T) =	50.600	% (VOLUME)
4:15 HRS	49.00 HRS (ET)	N2 CONC INLET GAS	(GS-100) / Y100(5,T) =	50.500	% (VOLUME)
	A V E R A G E :	N2 CONC INLET GAS	(GS-100) / AY100E =	50.550	% (VOLUME)
14:32 HRS	59.30 HRS (ET)	N2 CONC OUTLET GAS	(GS-108) / Y108(5,T) =	55.200	% (VOLUME)
	A V E R A G E :	N2 CONC OUTLET GAS	(GS-108) / AY108E =	55.200	% (VOLUME)
14:32 HRS	59.30 HRS (ET)	H2S CONC OUTLET GAS	(GS-108) / Y108(2,T) =	35.000	% (VOLUME)
	A V E R A G E :	H2S CONC OUTLET GAS	(GS-108) / AY108B =	35.000	% (VOLUME)
14:32 HRS	59.30 HRS (ET)	H2O CONC OUTLET GAS	(GS-108) / Y108(4,T) =	7.800	% (VOLUME)
	A V E R A G E :	H2O CONC OUTLET GAS	(GS-108) / AY108D =	7.800	% (VOLUME)
16:15 HRS	37.00 HRS (ET)	N2 INLET VOL FLOW RATE	(G-100) / G100(5,T) =	121.000	CFH (70 DEG F)
6:15 HRS	51.00 HRS (ET)	N2 INLET VOL FLOW RATE	(G-100) / G100(5,T) =	121.000	CFH (70 DEG F)
	A V E R A G E :	N2 INLET VOL FLOW RATE	(G-100) / AG100E =	121.000	CFH (70 DEG F)
4:15 HRS	25.00 HRS (ET)	WEIGHT CYCLONE DUST	(D-101) / CD101(T) =	0.0	LB DUST
12:15 HRS	33.00 HRS (ET)	WEIGHT CYCLONE DUST	(D-101) / CD101(T) =	0.020	LB DUST
20:15 HRS	41.00 HRS (ET)	WEIGHT CYCLONE DUST	(D-101) / CD101(T) =	0.010	LB DUST
4:15 HRS	49.00 HRS (ET)	WEIGHT CYCLONE DUST	(D-101) / CD101(T) =	0.020	LB DUST
	T O T A L :	WEIGHT CYCLONE DUST	(D-101) / WD101 =	0.050	LB DUST
	R A T E :	WEIGHT CYCLONE DUST	(D-101) / RD101 =	0.002	LB DUST/HR
4:15 HRS	25.00 HRS (ET)	WEIGHT FILTER DUST	(D-102) / CD102(T) =	0.0	LB DUST
4:15 HRS	49.00 HRS (ET)	WEIGHT FILTER DUST	(D-102) / CD102(T) =	0.0	LB DUST
	T O T A L :	WEIGHT FILTER DUST	(D-102) / WD102 =	0.0	LB DUST
	R A T E :	WEIGHT FILTER DUST	(D-102) / RD102 =	0.0	LB DUST/HR
21:15 HRS	42.00 HRS (ET)	% TOT S ON CYCLONE DUST	(D-101) / D101(1,T) =	2.720	% (WEIGHT)
1:15 HRS	46.00 HRS (ET)	% TOT S ON CYCLONE DUST	(D-101) / D101(1,T) =	3.200	% (WEIGHT)
5:15 HRS	50.00 HRS (ET)	% TOT S ON CYCLONE DUST	(D-101) / D101(1,T) =	3.640	% (WEIGHT)
	A V E R A G E :	% TOT S ON CYCLONE DUST	(D-101) / AD101A =	3.187	% (WEIGHT)
16:15 HRS	37.00 HRS (ET)	% TOT S ON FILTER DUST	(D-102) / D102(1,T) =	0.0	% (WEIGHT)
6:15 HRS	51.00 HRS (ET)	% TOT S ON FILTER DUST	(D-102) / D102(1,T) =	0.0	% (WEIGHT)
	A V E R A G E :	% TOT S ON FILTER DUST	(D-102) / AD102A =	0.0	% (WEIGHT)

CARBON INVENTORY HOPPER

21:15 HRS	42.00 HRS (ET)	% RESIDUAL S ON CARBON	(CS- 90) /	Z90(1,T) =	2.720	% (WEIGHT)
1:15 HRS	46.00 HRS (ET)	% RESIDUAL S ON CARBON	(CS- 90) /	Z90(1,T) =	3.200	% (WEIGHT)
5:15 HRS	50.00 HRS (ET)	% RESIDUAL S ON CARBON	(CS- 90) /	Z90(1,T) =	3.640	% (WEIGHT)
	AVERAGE :	% RESIDUAL S ON CARBON	(CS- 90) /	AZ90A =	3.187	% (WEIGHT)
21:15 HRS	42.00 HRS (ET)	% RESIDUAL H2O ON CARBON	(CS- 90) /	Z90(2,T) =	2.230	% (WEIGHT)
1:15 HRS	46.00 HRS (ET)	% RESIDUAL H2O ON CARBON	(CS- 90) /	Z90(2,T) =	2.230	% (WEIGHT)
5:15 HRS	50.00 HRS (ET)	% RESIDUAL H2O ON CARBON	(CS- 90) /	Z90(2,T) =	2.230	% (WEIGHT)
	AVERAGE :	% RESIDUAL H2O ON CARBON	(CS- 90) /	AZ90B =	2.230	% (WEIGHT)
16:15 HRS	37.00 HRS (ET)	CARBON RECYCLE RATE	(C- 90) /	C90(1,T) =	31.000	LB MAT'L/HR
6:15 HRS	51.00 HRS (ET)	CARBON RECYCLE RATE	(C- 90) /	C90(1,T) =	31.000	LB MAT'L/HR
	AVERAGE :	CARBON RECYCLE RATE	(C- 90) /	AC90A =	31.000	LB MAT'L/HR

SULFUR CONDENSER

16:15 HRS	37.00 HRS (ET)	WEIGHT SULFUR COLLECTED	(S-401) /	S401(T) =	0.0	LB SULFUR
6:15 HRS	51.00 HRS (ET)	WEIGHT SULFUR COLLECTED	(S-401) /	S401(T) =	0.0	LB SULFUR
	TOTAL :	WEIGHT SULFUR COLLECTED	(S-401) /	WS401 =	0.0	LB SULFUR
	RATE :	WEIGHT SULFUR COLLECTED	(S-401) /	RS401 =	0.0	LB SULFUR/HR

STATUS REPORT OF OPERATING CONDITIONS FOR INTEGRATED OPERATION OF SO2 RECOVERY PROCESS

OPERATING PERIOD:

DATE: 4/21/74 TIME OF RECORD: 16:15 HRS TO 24: 0 HRS
DATE: 4/22/74 TIME OF RECORD: 0: 0 HRS TO 6:15 HRS

PROCESS ELAPSED TIME OF PERIOD: START 37.00 HRS / END 51.00 HRS LENGTH OF PERIOD: 14.00 HRS

SUMMARY OF INTEGRATED PROCESS PERFORMANCE:

1.	SO2 REMOVAL	PRSO2 =	97.78 % (ACTUAL)	90.0 % (GOAL)
2.	H2S UTILIZATION	PUH2S =	82.94 % (ACTUAL)	95.0 % (GOAL)
3.	ACID CONVERSION (TO SULFUR)	PVCS =	63.99 % (ACTUAL)	99.0 % (GOAL)
4.	H2 UTILIZATION (TO H2S)	PHCHS =	80.76 % (ACTUAL)	90.0 % (GOAL)
5.	SULFUR RECOVERY	PRS =	0.0 % (ACTUAL)	100.0 % (GOAL) OF SCRBED SO2
			0.0 % (ACTUAL)	25.0 % (GOAL) OF STRIPPED SULFUR
6.	H2 UTILIZATION 4" UNIT	PUH2 =	100.00 %	
7.	RESIDUAL SULFUR ON CARBON	X90A =	0.0337 LB S/LB C	
8.	CARBON RECYCLE RATE (DB)	RC90 =	29.321 LB C(DB)/HR	
9.	ACID LOADING INLET CARBON 6" UNIT	X301C =	0.2134 LB ACID/LB C	
10.	MOISTURE CONTENT INLET CARBON 6" UNIT	X301B =	0.1411 LB H2O/LB C	
11.	ACID LOADING INLET CARBON 8" UNIT	X302C =	0.2134 LB ACID/LB C	
12.	MOISTURE CONTENT INLET CARBON 8" UNIT	X302B =	0.1411 LB H2O/LB C	
13.	TOTAL ACID CONVERTED 8" UNIT	PVC =	98.15 %	
14.	SULFUR CONVERSION (TO H2S)	PSCHS =	120.63 %	
15.	SULFUR CONDENSER EFFICIENCY	ERV400=	0.0 %	

MAJOR EVENTS DURING OPERATING PERIOD:

BY-PASSED 18" UNIT DUST COLLECTOR 37.0 HRS.
FLUE GAS STARTED 37.4 HRS. AT 3 FT/SEC.
CYLINDER H2S TO 8" UNIT STARTED 40.0 HRS.
H2 TO 4" UNIT STARTED 40.6 HRS.; GAS VELOCITY 2.0 FT/SEC.
OFF GAS 4" UNIT GOING TO BURNER

STATUS REPORT OF OPERATING CONDITIONS FOR INTEGRATED OPERATION OF SO2 RECOVERY PROCESS

OPERATING PERIOD:

DATE: 4/21/74 TIME OF RECORD: 16:15 HRS TO 24: 0 HRS
DATE: 4/22/74 TIME OF RECORD: 0: 0 HRS TO 6:15 HRS

PROCESS ELAPSED TIME OF PERIOD: START 37.00 HRS / END 51.00 HRS LENGTH OF PERIOD: 14.00 HRS

SULFUR MATERIAL BALANCE (USING CYLINDER H2S):

S O 2 S C R B E R

I N			
INLET GAS AS SO2	(G- 13) /	BG10A =	2.4278 LB SULFUR/HR
INLET C AS RESIDUAL S	(C- 11) /	BC11A =	0.9879 LB SULFUR/HR
T O T A L I N :	(RV- 10) /	SI10 =	3.4157 LB SULFUR/HR
O U T			
OUTLET GAS AS SO2	(G- 13) /	BG13A =	0.0539 LB SULFUR/HR
OUTLET CARBON	(C- 12) /	BC12A =	3.0312 LB SULFUR/HR
CYCLONE DUST	(D- 11) /	BD11A =	0.0146 LB SULFUR/HR
COLLECTOR DUST	(D- 12) /	BD12A =	0.0 LB SULFUR/HR
CARBON WEEPAGE	(CW- 12) /	BCW12A =	0.0051 LB SULFUR/HR
T O T A L O U T :	(RV- 10) /	SO10 =	3.1047 LB SULFUR/HR

6" D I A C A R B O N P R E C O N D I T I O N E R

I N			
INLET CARBON	(C- 12) /	BC12A =	3.0312 LB SULFUR/HR
T O T A L I N :	(RV-300) /	SI300 =	3.0312 LB SULFUR/HR
O U T			
OUTLET CARBON	(C-301) /	BC301A =	3.0312 LB SULFUR/HR
CYCLONE DUST	(D-301) /	BD301A =	0.0 LB SULFUR/HR
T O T A L O U T :	(RV-300) /	SO300 =	3.0312 LB SULFUR/HR

S U L F U R G E N E R A T O R

I N			
INLET GAS AS H2S (CYL)	(G-201) /	BG201B =	7.8554 LB SULFUR/HR
INLET GAS AS H2S (PROC)	(G-201) /	BG203R =	0.0 LB SULFUR/HR
INLET CARBON	(C-201) /	BC201A =	3.0312 LB SULFUR/HR
T O T A L I N :	(RV-200) /	SI200 =	10.8866 LB SULFUR/HR
O U T			
OUTLET GAS AS H2S	(G-205) /	BG205B =	1.3403 LB SULFUR/HR
OUTLET GAS AS SO2	(G-205) /	BG205A =	0.1703 LB SULFUR/HR
OUTLET CARBON	(C-202) /	BC202A =	6.2604 LB SULFUR/HR
T O T A L O U T :	(RV-200) /	SO200 =	7.7710 LB SULFUR/HR

H2S GENERATOR/SULFUR STRIPPER

IN

INLET CARBON	(C-202) / BC202A =	6.2604	LB SULFUR/HR
TOTAL IN :	(RV-100) / SI100 =	6.2604	LB SULFUR/HR

OUT

OUTLET CARBON	(C-103) / BC103A =	0.9879	LB SULFUR/HR
OUTLET GAS AS H2S	(G-104) / BG104B =	6.3602	LB SULFUR/HR
OUTLET GAS AS S	(G-104) / BG104S =	0.0	LB SULFUR/HR
CYCLONE DUST	(D-101) / BD101A =	0.0001	LB SULFUR/HR
FILTER DUST	(D-102) / BD102A =	0.0	LB SULFUR/HR
TOTAL OUT :	(RV-100) / SO100 =	7.3481	LB SULFUR/HR

OVERALL SULFUR BALANCE

IN

INLET GAS 18" UNIT AS SO2	(G- 10) / BG10A =	2.4278	LB SULFUR/HR
INLET GAS 8" UNIT AS CYL H2S	(G-201) / BG201B =	7.8554	LB SULFUR/HR
TOTAL SULFUR IN :		10.2832	LB SULFUR/HR

OUT

OUTLET GAS 18" UNIT AS SO2	(G- 13) / BG13A =	0.0539	LB SULFUR/HR
CYCLONE DUST 18" UNIT	(D- 11) / BD11A =	0.0146	LB SULFUR/HR
COLLECTOR DUST 18" UNIT	(D- 12) / BD12A =	0.0	LB SULFUR/HR
CARBON WEEPAGE 18" UNIT	(CW- 12) / BCW12A =	0.0051	LB SULFUR/HR
CYCLONE DUST 6" UNIT	(D-301) / BD301A =	0.0	LB SULFUR/HR
OUTLET GAS 8" UNIT AS H2S	(G-205) / BG205B =	1.3403	LB SULFUR/HR
OUTLET GAS 8" UNIT AS SO2	(G-205) / BG205A =	0.1703	LB SULFUR/HR
OUTLET GAS 4" UNIT AS H2S	(G-104) / BG104B =	6.3602	LB SULFUR/HR
OUTLET GAS 4" UNIT AS S.	(G-104) / BG104S =	0.0	LB SULFUR/HR
CYCLONE DUST 4" UNIT	(D-101) / BD101A =	0.0001	LB SULFUR/HR
FILTER DUST 4" UNIT	(D-102) / BD102A =	0.0	LB SULFUR/HR
TOTAL SULFUR OUT :		7.9443	LB SULFUR/HR

HYDROGEN MATERIAL BALANCE:

SULFUR GENERATOR

IN				
	INLET GAS AS H2	(G-203) / BG203C =	0.0	LB HYDROGEN/HR
	INLET GAS AS H2S (CYL)	(G-203) / BG203B =	0.4908	LB HYDROGEN/HR
	INLET GAS AS H2S (PROC)	(G-203) / BG203 =	0.0	LB HYDROGEN/HR
	INLET GAS AS H2O	(G-203) / BG203D =	0.0	LB HYDROGEN/HR
	INLET CARBON	(C-201) / BC201H =	0.5875	LB HYDROGEN/HR
	TOTAL IN:	(RV-200) / HI200 =	1.0784	LB HYDROGEN/HR
OUT				
	OUTLET GAS AS H2	(G-205) / BG205C =	0.0	LB HYDROGEN/HR
	OUTLET GAS AS H2S	(G-205) / BG205H =	0.0837	LB HYDROGEN/HR
	OUTLET GAS AS H2O	(G-205) / BG205D =	0.6158	LB HYDROGEN/HR
	OUTLET CARBON	(C-202) / BC202H =	0.0860	LB HYDROGEN/HR
	TOTAL OUT:	(RV-200) / HO200 =	0.7855	LB HYDROGEN/HR

H2S GENERATOR/SULFUR STRIPPER

IN				
	INLET GAS AS H2	(G-103) / BG103C =	0.4921	LB HYDROGEN/HR
	INLET CARBON	(C-202) / BC202H =	0.0860	LB HYDROGEN/HR
	TOTAL IN:	(RV-100) / HI100 =	0.5781	LB HYDROGEN/HR
OUT				
	OUTLET GAS AS H2	(G-104) / BG104C =	0.0	LB HYDROGEN/HR
	OUTLET GAS AS H2S	(G-104) / BG104H =	0.3974	LB HYDROGEN/HR
	OUTLET GAS AS H2O	(G-104) / BG104D =	0.0886	LB HYDROGEN/HR
	TOTAL OUT:	(RV-100) / HO100 =	0.4860	LB HYDROGEN/HR

APPENDIX A-12-4

EXPERIMENTAL DATA AND RESULTS FOR INTEGRAL RUN IR-2-6 (51 - 66 hours)

STATUS REPORT OF OPERATING CONDITIONS FOR INTEGRATED OPERATION OF SO2 RECOVERY PROCESS

OPERATING PERIOD:

DATE: 4/22/74 TIME OF RECORD: 6:15 HRS TO 21:15 HRS

PROCESS ELAPSED TIME OF PERIOD: START 51.00 HRS / END 66.00 HRS LENGTH OF PERIOD: 15.00 HRS

PROCESS VARIABLES FOR OPERATING PERIOD:

S O 2 S C R B E R

10:15 HRS	55.00 HRS (ET)	SO2 CONC INLET FLUE GAS	(GS- 10) /	Y10(1,T)	=	2000.000 PPM (VOLUME)
14:15 HRS	59.00 HRS (ET)	SO2 CONC INLET FLUE GAS	(GS- 10) /	Y10(1,T)	=	2025.000 PPM (VOLUME)
18:15 HRS	63.00 HRS (ET)	SO2 CONC INLET FLUE GAS	(GS- 10) /	Y10(1,T)	=	2025.000 PPM (VOLUME)
22:15 HRS	67.00 HRS (ET)	SO2 CONC INLET FLUE GAS	(GS- 10) /	Y10(1,T)	=	2075.000 PPM (VOLUME)
	A V E R A G E :	SO2 CONC INLET FLUE GAS	(GS- 10) /	AY10A	=	2031.250 PPM (VOLUME)
11:15 HRS	56.00 HRS (ET)	SO2 CONC OUTLET FLUE GAS	(GS- 16) /	Y16(1,T)	=	57.500 PPM (VOLUME)
15:15 HRS	60.00 HRS (ET)	SO2 CONC OUTLET FLUE GAS	(GS- 16) /	Y16(1,T)	=	85.000 PPM (VOLUME)
18:15 HRS	63.00 HRS (ET)	SO2 CONC OUTLET FLUE GAS	(GS- 16) /	Y16(1,T)	=	70.000 PPM (VOLUME)
22:15 HRS	67.00 HRS (ET)	SO2 CONC OUTLET FLUE GAS	(GS- 16) /	Y16(1,T)	=	67.000 PPM (VOLUME)
	A V E R A G E :	SO2 CONC OUTLET FLUE GAS	(GS- 16) /	AY16A	=	69.875 PPM (VOLUME)
6:15 HRS	51.00 HRS (ET)	H2O CONC INLET FLUE GAS	(GS- 10) /	Y10(4,T)	=	10.000 % (VOLUME)
21:15 HRS	66.00 HRS (ET)	H2O CONC INLET FLUE GAS	(GS- 10) /	Y10(4,T)	=	10.000 % (VOLUME)
	A V E R A G E :	H2O CONC INLET FLUE GAS	(GS- 10) /	AY10D	=	10.000 % (VOLUME)
10:15 HRS	55.00 HRS (ET)	ORIFICE PRESSURE DROP	(DP- 10) /	DP10(T)	=	2.200 INCHES H2O
18:15 HRS	63.00 HRS (ET)	ORIFICE PRESSURE DROP	(DP- 10) /	DP10(T)	=	2.200 INCHES H2O
2:15 HRS	71.00 HRS (ET)	ORIFICE PRESSURE DROP	(DP- 10) /	DP10(T)	=	2.200 INCHES H2O
	A V E R A G E :	ORIFICE PRESSURE DROP	(DP- 10) /	ADP10	=	2.200 INCHES H2O
7:15 HRS	52.00 HRS (ET)	ORIFICE TEMPERATURE	(TL- 10) /	TL10(T)	=	318.000 DEG F
10: 2 HRS	54.80 HRS (ET)	ORIFICE TEMPERATURE	(TL- 10) /	TL10(T)	=	317.000 DEG F
11:45 HRS	56.50 HRS (ET)	ORIFICE TEMPERATURE	(TL- 10) /	TL10(T)	=	315.000 DEG F
14:20 HRS	59.10 HRS (ET)	ORIFICE TEMPERATURE	(TL- 10) /	TL10(T)	=	315.000 DEG F
18:32 HRS	63.30 HRS (ET)	ORIFICE TEMPERATURE	(TL- 10) /	TL10(T)	=	314.000 DEG F
20:32 HRS	65.30 HRS (ET)	ORIFICE TEMPERATURE	(TL- 10) /	TL10(T)	=	311.000 DEG F
	A V E R A G E :	ORIFICE TEMPERATURE	(TL- 10) /	ATL10	=	315.000 DEG F
4:15 HRS	49.00 HRS (ET)	WEIGHT CYCLONE DUST	(D- 11) /	CD11(T)	=	0.0 LB DUST
12:15 HRS	57.00 HRS (ET)	WEIGHT CYCLONE DUST	(D- 11) /	CD11(T)	=	2.300 LB DUST
20:15 HRS	65.00 HRS (ET)	WEIGHT CYCLONE DUST	(D- 11) /	CD11(T)	=	2.200 LB DUST
	T O T A L :	WEIGHT CYCLONE DUST	(D- 11) /	WD11	=	4.500 LB DUST
	R A T E :	WEIGHT CYCLONE DUST	(D- 11) /	RD11	=	0.281 LB DUST/HR
4:15 HRS	49.00 HRS (ET)	WEIGHT COLLECTOR DUST	(D- 12) /	CD12(T)	=	0.0 LB DUST
20:15 HRS	65.00 HRS (ET)	WEIGHT COLLECTOR DUST	(D- 12) /	CD12(T)	=	0.0 LB DUST
	T O T A L :	WEIGHT COLLECTOR DUST	(D- 12) /	WD12	=	0.0 LB DUST
	R A T E :	WEIGHT COLLECTOR DUST	(D- 12) /	RD12	=	0.0 LB DUST/HR
4:15 HRS	49.00 HRS (ET)	WEIGHT CARBON WEEPAGE	(CW- 12) /	CW12(T)	=	0.0 LB DUST
12:15 HRS	57.00 HRS (ET)	WEIGHT CARBON WEEPAGE	(CW- 12) /	CW12(T)	=	0.060 LB DUST
20:15 HRS	65.00 HRS (ET)	WEIGHT CARBON WEEPAGE	(CW- 12) /	CW12(T)	=	0.040 LB DUST

```
T O T A L :    WEIGHT CARBON WEEPAGE        (CW- 12) /    WCW12  =      0.100 LB DUST
  R A T E :    WEIGHT CARBON WEEPAGE        (CW- 12) /    RCW12  =      0.006 LB DUST/HR

12:15 HRS    57.00 HRS (ET)    % TOT S ON CYCLONE DUST     ( D- 11) / D11(1,T)  =      6.080 % (WEIGHT)
20:15 HRS    65.00 HRS (ET)    % TOT S ON CYCLONE DUST     ( D- 11) / D11(1,T)  =      6.800 % (WEIGHT)
             A V E R A G E :   % TOT S ON CYCLONE DUST     ( D- 11) /    AD11A  =      6.440 % (WEIGHT)

 6:15 HRS    51.00 HRS (ET)    % TOT S ON COLLECTOR DUST   ( D- 12) / D12(1,T)  =      0.0   % (WEIGHT)
21:15 HRS    66.00 HRS (ET)    % TOT S ON COLLECTOR DUST   ( D- 12) / D12(1,T)  =      0.0   % (WEIGHT)
             A V E R A G E :   % TOT S ON COLLECTOR DUST   ( D- 12) /    AD12A  =      0.0   % (WEIGHT)
```

6" DIA CARBON PRECONDITIONER

9:15 HRS	54.00 HRS (ET)	% TOT S ON INLET CARBON	(CS-301) / Z301(1,T) =	8.080	% (WEIGHT)
13:15 HRS	58.00 HRS (ET)	% TOT S ON INLET CARBON	(CS-301) / Z301(1,T) =	7.920	% (WEIGHT)
17:15 HRS	62.00 HRS (ET)	% TOT S ON INLET CARBON	(CS-301) / Z301(1,T) =	8.400	% (WEIGHT)
21:15 HRS	66.00 HRS (ET)	% TOT S ON INLET CARBON	(CS-301) / Z301(1,T) =	8.520	% (WEIGHT)
	A V E R A G E :	% TOT S ON INLET CARBON	(CS-301) / AZ301A =	8.230	% (WEIGHT)
9:15 HRS	54.00 HRS (ET)	% H2O ON INLET CARBON	(CS-301) / Z301(2,T) =	8.200	% (WEIGHT)
13:15 HRS	58.00 HRS (ET)	% H2O ON INLET CARBON	(CS-301) / Z301(2,T) =	8.000	% (WEIGHT)
17:15 HRS	62.00 HRS (ET)	% H2O ON INLET CARBON	(CS-301) / Z301(2,T) =	8.200	% (WEIGHT)
21:15 HRS	66.00 HRS (ET)	% H2O ON INLET CARBON	(CS-301) / Z301(2,T) =	8.000	% (WEIGHT)
	A V E R A G E :	% H2O ON INLET CARBON	(CS-301) / AZ301B =	8.100	% (WEIGHT)
4:15 HRS	49.00 HRS (ET)	WEIGHT CYCLONE DUST	(D-301) / CD301(T) =	0.0	LB DUST
20:15 HRS	65.00 HRS (ET)	WEIGHT CYCLONE DUST	(D-301) / CD301(T) =	0.0	LB DUST
	T O T A L :	WEIGHT CYCLONE DUST	(D-301) / WD301 =	0.0	LB DUST
	R A T E :	WEIGHT CYCLONE DUST	(D-301) / RD301 =	0.0	LB DUST/HR
6:15 HRS	51.00 HRS (ET)	% TOT S ON CYCLONE DUST	(D-301) / D301(1,T) =	0.0	% (WEIGHT)
21:15 HRS	66.00 HRS (ET)	% TOT S ON CYCLONE DUST	(D-301) / D301(1,T) =	0.0	% (WEIGHT)
	A V E R A G E :	% TOT S ON CYCLONE DUST	(D-301) / AD301A =	0.0	% (WEIGHT)

S U L F U R G E N E R A T O R

23:50 HRS	44.60 HRS (ET)	SO2 CONC OUTLET GAS	(GS-206) / Y206(1,T) =	0.700	% (VOLUME)
5:38 HRS	50.40 HRS (ET)	SO2 CONC OUTLET GAS	(GS-206) / Y206(1,T) =	0.990	% (VOLUME)
21:32 HRS	66.30 HRS (ET)	SO2 CONC OUTLET GAS	(GS-206) / Y206(1,T) =	0.980	% (VOLUME)
	A V E R A G E :	SO2 CONC OUTLET GAS	(GS-206) / AY206A =	0.890	% (VOLUME)
20:15 HRS	41.00 HRS (ET)	H2S CONC INLET GAS	(GS-200) / Y200(2,T) =	47.500	% (VOLUME)
1:15 HRS	46.00 HRS (ET)	H2S CONC INLET GAS	(GS-200) / Y200(2,T) =	46.900	% (VOLUME)
8: 2 HRS	52.80 HRS (ET)	H2S CONC INLET GAS	(GS-200) / Y200(2,T) =	47.200	% (VOLUME)
	A V E R A G E :	H2S CONC INLET GAS	(GS-200) / AY200B =	47.200	% (VOLUME)
23:50 HRS	44.60 HRS (ET)	H2S CONC OUTLET GAS	(GS-206) / Y206(2,T) =	7.500	% (VOLUME)
5:38 HRS	50.40 HRS (ET)	H2S CONC OUTLET GAS	(GS-206) / Y206(2,T) =	5.800	% (VOLUME)
21:32 HRS	66.30 HRS (ET)	H2S CONC OUTLET GAS	(GS-206) / Y206(2,T) =	4.450	% (VOLUME)
	A V E R A G E :	H2S CONC OUTLET GAS	(GS-206) / AY206B =	5.917	% (VOLUME)
20:15 HRS	41.00 HRS (ET)	H2 CONC INLET GAS	(GS-200) / Y200(3,T) =	0.0	% (VOLUME)
1:15 HRS	46.00 HRS (ET)	H2 CONC INLET GAS	(GS-200) / Y200(3,T) =	0.0	% (VOLUME)
8: 2 HRS	52.80 HRS (ET)	H2 CONC INLET GAS	(GS-200) / Y200(3,T) =	0.0	% (VOLUME)
	A V E R A G E :	H2 CONC INLET GAS	(GS-200) / AY200C =	0.0	% (VOLUME)
23:50 HRS	44.60 HRS (ET)	H2 CONC OUTLET GAS	(GS-206) / Y206(3,T) =	0.0	% (VOLUME)
5:38 HRS	50.40 HRS (ET)	H2 CONC OUTLET GAS	(GS-206) / Y206(3,T) =	0.0	% (VOLUME)
21:32 HRS	66.30 HRS (ET)	H2 CONC OUTLET GAS	(GS-206) / Y206(3,T) =	0.0	% (VOLUME)
	A V E R A G E :	H2 CONC OUTLET GAS	(GS-206) / AY206C =	0.0	% (VOLUME)
20:15 HRS	41.00 HRS (ET)	H2O CONC INLET GAS	(GS-200) / Y200(4,T) =	0.0	% (VOLUME)
1:15 HRS	46.00 HRS (ET)	H2O CONC INLET GAS	(GS-200) / Y200(4,T) =	0.0	% (VOLUME)
8: 2 HRS	52.80 HRS (ET)	H2O CONC INLET GAS	(GS-200) / Y200(4,T) =	0.0	% (VOLUME)
	A V E R A G E :	H2O CONC INLET GAS	(GS-200) / AY200D =	0.0	% (VOLUME)
23:50 HRS	44.60 HRS (ET)	H2O CONC OUTLET GAS	(GS-206) / Y206(4,T) =	48.000	% (VOLUME)
5:38 HRS	50.40 HRS (ET)	H2O CONC OUTLET GAS	(GS-206) / Y206(4,T) =	49.600	% (VOLUME)
21:32 HRS	66.30 HRS (ET)	H2O CONC OUTLET GAS	(GS-206) / Y206(4,T) =	51.800	% (VOLUME)
	A V E R A G E :	H2O CONC OUTLET GAS	(GS-206) / AY206D =	49.667	% (VOLUME)
20:15 HRS	41.00 HRS (ET)	N2 CONC INLET GAS	(GS-200) / Y200(5,T) =	52.500	% (VOLUME)
1:15 HRS	46.00 HRS (ET)	N2 CONC INLET GAS	(GS-200) / Y200(5,T) =	53.100	% (VOLUME)
8: 2 HRS	52.80 HRS (ET)	N2 CONC INLET GAS	(GS-200) / Y200(5,T) =	52.800	% (VOLUME)
	A V E R A G E :	N2 CONC INLET GAS	(GS-200) / AY200E =	52.800	% (VOLUME)
23:50 HRS	44.60 HRS (ET)	N2 CONC OUTLET GAS	(GS-206) / Y206(5,T) =	43.800	% (VOLUME)
5:38 HRS	50.40 HRS (ET)	N2 CONC OUTLET GAS	(GS-206) / Y206(5,T) =	43.400	% (VOLUME)
21:32 HRS	66.30 HRS (ET)	N2 CONC OUTLET GAS	(GS-206) / Y206(5,T) =	42.800	% (VOLUME)
	A V E R A G E :	N2 CONC OUTLET GAS	(GS-206) / AY206E =	43.333	% (VOLUME)
6:15 HRS	51.00 HRS (ET)	N2 INLET VOL FLOW RATE	(G-200) / G200(5,T) =	106.000	CFH (70 DEG F)
21:15 HRS	66.00 HRS (ET)	N2 INLET VOL FLOW RATE	(G-200) / G200(5,T) =	106.000	CFH (70 DEG F)
	A V E R A G E :	N2 INLET VOL FLOW RATE	(G-200) / AG200E =	106.000	CFH (70 DEG F)
9:15 HRS	54.00 HRS (ET)	% TOT S ON INLET CARBON	(CS-302) / Z302(1,T) =	8.080	% (WEIGHT)
13:15 HRS	58.00 HRS (ET)	% TOT S ON INLET CARBON	(CS-302) / Z302(1,T) =	7.920	% (WEIGHT)
17:15 HRS	62.00 HRS (ET)	% TOT S ON INLET CARBON	(CS-302) / Z302(1,T) =	8.400	% (WEIGHT)
21:15 HRS	66.00 HRS (ET)	% TOT S ON INLET CARBON	(CS-302) / Z302(1,T) =	8.520	% (WEIGHT)
	A V E R A G E :	% TOT S ON INLET CARBON	(CS-302) / AZ302A =	8.230	% (WEIGHT)
9:15 HRS	54.00 HRS (ET)	% TOT S ON OUTLET CARBON	(CS-200) / Z200(1,T) =	23.320	% (WEIGHT)
13:15 HRS	58.00 HRS (ET)	% TOT S ON OUTLET CARBON	(CS-200) / Z200(1,T) =	24.800	% (WEIGHT)

17:15 HRS	62.00 HRS (ET)	% TOT S ON OUTLET CARBON	(CS-200) / Z200(1,T) =	25.600	% (WEIGHT)
21:15 HRS	66.00 HRS (ET)	% TOT S ON OUTLET CARBON	(CS-200) / Z200(1,T) =	23.100	% (WEIGHT)
	A V E R A G E :	% TOT S ON OUTLET CARBON	(CS-200) / AZ200A =	24.210	% (WEIGHT)
9:15 HRS	54.00 HRS (ET)	% H2O ON INLET CARBON	(CS-302) / Z302(2,T) =	8.200	% (WEIGHT)
13:15 HRS	58.00 HRS (ET)	% H2O ON INLET CARBON	(CS-302) / Z302(2,T) =	8.000	% (WEIGHT)
17:15 HRS	62.00 HRS (ET)	% H2O ON INLET CARBON	(CS-302) / Z302(2,T) =	8.200	% (WEIGHT)
21:15 HRS	66.00 HRS (ET)	% H2O ON INLET CARBON	(CS-302) / Z302(2,T) =	8.000	% (WEIGHT)
	A V E R A G E :	% H2O ON INLET CARBON	(CS-302) / AZ302B =	8.100	% (WEIGHT)
9:15 HRS	54.00 HRS (ET)	% H2O ON OUTLET CARBON	(CS-200) / Z200(2,T) =	1.950	% (WEIGHT)
13:15 HRS	58.00 HRS (ET)	% H2O ON OUTLET CARBON	(CS-200) / Z200(2,T) =	1.950	% (WEIGHT)
17:15 HRS	62.00 HRS (ET)	% H2O ON OUTLET CARBON	(CS-200) / Z200(2,T) =	2.800	% (WEIGHT)
21:15 HRS	66.00 HRS (ET)	% H2O ON OUTLET CARBON	(CS-200) / Z200(2,T) =	1.400	% (WEIGHT)
	A V E R A G E :	% H2O ON OUTLET CARBON	(CS-200) / AZ200B =	2.025	% (WEIGHT)
9:15 HRS	54.00 HRS (ET)	% ACID ON OUTLET CARBON	(CS-200) / Z200(3,T) =	0.610	% (WEIGHT)
13:15 HRS	58.00 HRS (ET)	% ACID ON OUTLET CARBON	(CS-200) / Z200(3,T) =	0.540	% (WEIGHT)
17:15 HRS	62.00 HRS (ET)	% ACID ON OUTLET CARBON	(CS-200) / Z200(3,T) =	0.590	% (WEIGHT)
21:15 HRS	66.00 HRS (ET)	% ACID ON OUTLET CARBON	(CS-200) / Z200(3,T) =	0.540	% (WEIGHT)
	A V E R A G E :	% ACID ON OUTLET CARBON	(CS-200) / AZ200C =	0.570	% (WEIGHT)

H2S GENERATOR/SULFUR STRIPPER

22:26 HRS	43.20 HRS (ET)	H2 CONC INLET GAS	(GS-100) / Y100(3,T) =	49.400	% (VOLUME)
4:15 HRS	49.00 HRS (ET)	H2 CONC INLET GAS	(GS-100) / Y100(3,T) =	49.500	% (VOLUME)
	A V E R A G E :	H2 CONC INLET GAS	(GS-100) / AY100C =	49.450	% (VOLUME)
14:32 HRS	59.30 HRS (ET)	H2 CONC OUTLET GAS	(GS-108) / Y108(3,T) =	0.0	% (VOLUME)
	A V E R A G E :	H2 CONC OUTLET GAS	(GS-108) / AY108C =	0.0	% (VOLUME)
22:26 HRS	43.20 HRS (ET)	N2 CONC INLET GAS	(GS-100) / Y100(5,T) =	50.600	% (VOLUME)
4:15 HRS	49.00 HRS (ET)	N2 CONC INLET GAS	(GS-100) / Y100(5,T) =	50.500	% (VOLUME)
	A V E R A G E :	N2 CONC INLET GAS	(GS-100) / AY100E =	50.550	% (VOLUME)
14:32 HRS	59.30 HRS (ET)	N2 CONC OUTLET GAS	(GS-108) / Y108(5,T) =	55.200	% (VOLUME)
	A V E R A G E :	N2 CONC OUTLET GAS	(GS-108) / AY108E =	55.200	% (VOLUME)
14:32 HRS	59.30 HRS (ET)	H2S CONC OUTLET GAS	(GS-108) / Y108(2,T) =	35.000	% (VOLUME)
	A V E R A G E :	H2S CONC OUTLET GAS	(GS-108) / AY108B =	35.000	% (VOLUME)
14:32 HRS	59.30 HRS (ET)	H2O CONC OUTLET GAS	(GS-108) / Y108(4,T) =	9.100	% (VOLUME)
	A V E R A G E :	H2O CONC OUTLET GAS	(GS-108) / AY108D =	9.100	% (VOLUME)
6:15 HRS	51.00 HRS (ET)	N2 INLET VOL FLOW RATE	(G-100) / G100(5,T) =	121.000	CFH (70 DEG F)
21:15 HRS	66.00 HRS (ET)	N2 INLET VOL FLOW RATE	(G-100) / G100(5,T) =	121.000	CFH (70 DEG F)
	A V E R A G E :	N2 INLET VOL FLOW RATE	(G-100) / AG100E =	121.000	CFH (70 DEG F)
4:15 HRS	49.00 HRS (ET)	WEIGHT CYCLONE DUST	(D-101) / CD101(T) =	0.0	LB DUST
12:15 HRS	57.00 HRS (ET)	WEIGHT CYCLONE DUST	(D-101) / CD101(T) =	0.059	LB DUST
20:15 HRS	65.00 HRS (ET)	WEIGHT CYCLONE DUST	(D-101) / CD101(T) =	0.088	LB DUST
	T O T A L :	WEIGHT CYCLONE DUST	(D-101) / WD101 =	0.147	LB DUST
	R A T E :	WEIGHT CYCLONE DUST	(D-101) / RD101 =	0.009	LB DUST/HR
4:15 HRS	49.00 HRS (ET)	WEIGHT FILTER DUST	(D-102) / CD102(T) =	0.0	LB DUST
20:15 HRS	65.00 HRS (ET)	WEIGHT FILTER DUST	(D-102) / CD102(T) =	0.0	LB DUST
	T O T A L :	WEIGHT FILTER DUST	(D-102) / WD102 =	0.0	LB DUST
	R A T E :	WEIGHT FILTER DUST	(D-102) / RD102 =	0.0	LB DUST/HR
9:15 HRS	54.00 HRS (ET)	% TOT S ON CYCLONE DUST	(D-101) / D101(1,T) =	3.640	% (WEIGHT)
11:15 HRS	56.00 HRS (ET)	% TOT S ON CYCLONE DUST	(D-101) / D101(1,T) =	3.800	% (WEIGHT)
17:15 HRS	62.00 HRS (ET)	% TOT S ON CYCLONE DUST	(D-101) / D101(1,T) =	3.960	% (WEIGHT)
21:15 HRS	66.00 HRS (ET)	% TOT S ON CYCLONE DUST	(D-101) / D101(1,T) =	3.920	% (WEIGHT)
	A V E R A G E :	% TOT S ON CYCLONE DUST	(D-101) / AD101A =	3.830	% (WEIGHT)
6:15 HRS	51.00 HRS (ET)	% TOT S ON FILTER DUST	(D-102) / D102(1,T) =	0.0	% (WEIGHT)
21:15 HRS	66.00 HRS (ET)	% TOT S ON FILTER DUST	(D-102) / D102(1,T) =	0.0	% (WEIGHT)
	A V E R A G E :	% TOT S ON FILTER DUST	(D-102) / AD102A =	0.0	% (WEIGHT)

C A R B O N I N V E N T O R Y H O P P E R

9:15 HRS	54.00 HRS (ET)	% RESIDUAL S ON CARBON	(CS- 90) /	Z90(1,T) =	3.640	% (WEIGHT)
13:15 HRS	58.00 HRS (ET)	% RESIDUAL S ON CARBON	(CS- 90) /	Z90(1,T) =	3.800	% (WEIGHT)
17:15 HRS	62.00 HRS (ET)	% RESIDUAL S ON CARBON	(CS- 90) /	Z90(1,T) =	3.960	% (WEIGHT)
21:15 HRS	66.00 HRS (ET)	% RESIDUAL S ON CARBON	(CS- 90) /	Z90(1,T) =	3.920	% (WEIGHT)
	A V E R A G E :	% RESIDUAL S ON CARBON	(CS- 90) /	AZ90A =	3.830	% (WEIGHT)
9:15 HRS	54.00 HRS (ET)	% RESIDUAL H2O ON CARBON	(CS- 90) /	Z90(2,T) =	2.230	% (WEIGHT)
13:15 HRS	58.00 HRS (ET)	% RESIDUAL H2O ON CARBON	(CS- 90) /	Z90(2,T) =	2.230	% (WEIGHT)
17:15 HRS	62.00 HRS (ET)	% RESIDUAL H2O ON CARBON	(CS- 90) /	Z90(2,T) =	2.230	% (WEIGHT)
21:15 HRS	66.00 HRS (ET)	% RESIDUAL H2O ON CARBON	(CS- 90) /	Z90(2,T) =	2.230	% (WEIGHT)
	A V E R A G E :	% RESIDUAL H2O ON CARBON	(CS- 90) /	AZ90B =	2.230	% (WEIGHT)
6:15 HRS	51.00 HRS (ET)	CARBON RECYCLE RATE	(C- 90) /	C90(1,T) =	31.000	LB MAT'L/HR
21:15 HRS	66.00 HRS (ET)	CARBON RECYCLE RATE	(C- 90) /	C90(1,T) =	31.000	LB MAT'L/HR
	A V E R A G E :	CARBON RECYCLE RATE	(C- 90) /	AC90A =	31.000	LB MAT'L/HR

S U L F U R C O N D E N S E R

6:15 HRS	51.00 HRS (ET)	WEIGHT SULFUR COLLECTED	(S-401) /	S401(T) =	0.0	LB SULFUR
21:15 HRS	66.00 HRS (ET)	WEIGHT SULFUR COLLECTED	(S-401) /	S401(T) =	0.0	LB SULFUR
	T O T A L :	WEIGHT SULFUR COLLECTED	(S-401) /	WS401 =	0.0	LB SULFUR
	R A T E :	WEIGHT SULFUR COLLECTED	(S-401) /	RS401 =	0.0	LB SULFUR/HR

STATUS REPORT OF OPERATING CONDITIONS FOR INTEGRATED OPERATION OF SO2 RECOVERY PROCESS

OPERATING PERIOD:

DATE: 4/22/74 TIME OF RECORD: 6:15 HRS TO 21:15 HRS

PROCESS ELAPSED TIME OF PERIOD: START 51.00 HRS / END 66.00 HRS LENGTH OF PERIOD: 15.00 HRS

SUMMARY OF INTEGRATED PROCESS PERFORMANCE:

1.	SO2 REMOVAL	PRSO2 =	96.56 % (ACTUAL)	90.0 % (GOAL)
2.	H2S UTILIZATION	PUH2S =	84.73 % (ACTUAL)	95.0 % (GOAL)
3.	ACID CONVERSION (TO SULFUR)	PVCS =	99.08 % (ACTUAL)	99.0 % (GOAL)
4.	H2 UTILIZATION (TO H2S)	PHCHS =	80.76 % (ACTUAL)	90.0 % (GOAL)
5.	SULFUR RECOVERY	PRS =	0.0 % (ACTUAL)	100.0 % (GOAL) OF SORBED SO2
			0.0 % (ACTUAL)	25.0 % (GOAL) OF STRIPPED SULFUR
6.	H2 UTILIZATION 4" UNIT	PUH2 =	100.00 %	
7.	RESIDUAL SULFUR ON CARBON	X90A =	0.0408 LB S/LB C	
8.	CARBON RECYCLE RATE (DB)	RC90 =	29.121 LB C(DB)/HR	
9.	ACID LOADING INLET CARBON 6" UNIT	X301C =	0.2213 LB ACID/LB C	
10.	MOISTURE CONTENT INLET CARBON 6" UNIT	X301B =	0.1112 LB H2O/LB C	
11.	ACID LOADING INLET CARBON 8" UNIT	X302C =	0.2213 LB ACID/LB C	
12.	MOISTURE CONTENT INLET CARBON 8" UNIT	X302B =	0.1112 LB H2O/LB C	
13.	TOTAL ACID CONVERTED 8" UNIT	PVC =	96.49 %	
14.	SULFUR CONVERSION (TO H2S)	PSCHS =	75.53 %	
15.	SULFUR CONDENSER EFFICIENCY	ERV400=	0.0 %	

MAJOR EVENTS DURING OPERATING PERIOD:

PLUG IN GAS LINE FROM 4" UNIT CYCLONE
TO SULFUR CONDENSER ACCOUNTED FOR
20" H2O PRESSURE DROP ACROSS CONDENSER.
PLUG BLOWN OUT AT 65.0 HRS.
SWITCHED BACK AND FORTH BETWEEN BURNER AND SULFUR CONDENSER DURING PERIOD.

STATUS REPORT OF OPERATING CONDITIONS FOR INTEGRATED OPERATION OF SO2 RECOVERY PROCESS

OPERATING PERIOD:

DATE: 4/22/74 TIME OF RECORD: 6:15 HRS TO 21:15 HRS

PROCESS ELAPSED TIME OF PERIOD: START 51.00 HRS / END 66.00 HRS LENGTH OF PERIOD: 15.00 HRS

SULFUR MATERIAL BALANCE (USING CYLINDER H2S):

SO2 SCRBER

IN			
INLET GAS AS SO2	(G- 13) /	BG10A =	2.3304 LB SULFUR/HR
INLET C AS RESIDUAL S	(C- 11) /	BC11A =	1.1873 LB SULFUR/HR
TOTAL IN:	(RV- 10) /	SI10 =	3.5177 LB SULFUR/HR
OUT			
OUTLET GAS AS SO2	(G- 13) /	SG13A =	0.0802 LB SULFUR/HR
OUTLET CARBON	(C- 12) /	BC12A =	3.2914 LB SULFUR/HR
CYCLONE DUST	(D- 11) /	BD11A =	0.0181 LB SULFUR/HR
COLLECTOR DUST	(D- 12) /	BD12A =	0.0 LB SULFUR/HR
CARBON WEEPAGE	(CW- 12) /	BCW12A =	0.0007 LB SULFUR/HR
TOTAL OUT:	(RV- 10) /	SO10 =	3.3904 LB SULFUR/HR

6" DIA CARBON PRECONDITIONER

IN			
INLET CARBON	(C- 12) /	BC12A =	3.2914 LB SULFUR/HR
TOTAL IN:	(RV-300) /	SI300 =	3.2914 LB SULFUR/HR
OUT			
OUTLET CARBON	(C-201) /	BC201A =	3.2914 LB SULFUR/HR
CYCLONE DUST	(D-301) /	BD301A =	0.0 LB SULFUR/HR
TOTAL OUT:	(RV-300) /	SO300 =	3.2914 LB SULFUR/HR

SULFUR GENERATOR

IN			
INLET GAS AS H2S (CYL)	(G-201) /	BG201B =	7.8554 LB SULFUR/HR
INLET GAS AS H2S (PROC)	(G-201) /	BG203R =	0.0 LB SULFUR/HR
INLET CARBON	(C-201) /	BC201A =	3.2914 LB SULFUR/HR
TOTAL IN:	(RV-200) /	SI200 =	11.1468 LB SULFUR/HR
OUT			
OUTLET GAS AS H2S	(G-205) /	BG205B =	1.1998 LB SULFUR/HR
OUTLET GAS AS SO2	(G-205) /	BG205A =	0.1805 LB SULFUR/HR
OUTLET CARBON	(C-202) /	BC202A =	9.6078 LB SULFUR/HR
TOTAL OUT:	(RV-200) /	SO200 =	10.9881 LB SULFUR/HR

H2S GENERATOR/SULFUR STRIPPER

IN

INLET CARBON	(D-2C2) / BC202A =	9.6078	LB SULFUR/HR
TOTAL IN :	(RV-1CC) / SI100 =	9.6078	LB SULFUR/HR

OUT

OUTLET CARBON	(D-1C3) / BC103A =	1.1873	LB SULFUR/HR
OUTLET GAS AS H2S	(G-1C4) / BG104B =	6.3602	LB SULFUR/HR
OUTLET GAS AS S	(G-1C4) / BG104S =	0.0	LB SULFUR/HR
CYCLONE DUST	(D-1C1) / BD101A =	0.0004	LB SULFUR/HR
FILTER DUST	(D-1C2) / BD102A =	0.0	LB SULFUR/HR
TOTAL OUT :	(RV-1CC) / SO100 =	7.5478	LB SULFUR/HR

OVERALL SULFUR BALANCE

IN

INLET GAS 18" UNIT AS SC2	(G- 1C) / BG10A =	2.3304	LB SULFUR/HR
INLET GAS 8" UNIT AS CYL H2S	(G-2C1) / BG201B =	7.8554	LB SULFUR/HR
TOTAL SULFUR IN :		10.1858	LB SULFUR/HR

OUT

OUTLET GAS 18" UNIT AS SC2	(G- 13) / BG13A =	0.0802	LB SULFUR/HR
CYCLONE DUST 18" UNIT	(D- 11) / BD11A =	0.0181	LB SULFUR/HR
COLLECTOR DUST 18" UNIT	(D- 12) / BD12A =	0.0	LB SULFUR/HR
CARBON WEEPAGE 18" UNIT	(CW- 12) / BCW12A =	0.0007	LB SULFUR/HR
CYCLONE DUST 6" UNIT	(D-3C1) / BD301A =	0.0	LB SULFUR/HR
OUTLET GAS 8" UNIT AS H2S	(G-2C5) / BG205B =	1.1998	LB SULFUR/HR
OUTLET GAS 8" UNIT AS SC2	(G-2C5) / BG205A =	0.1805	LB SULFUR/HR
OUTLET GAS 4" UNIT AS H2S	(G-1C4) / BG104B =	6.3602	LB SULFUR/HR
OUTLET GAS 4" UNIT AS S	(G-1C4) / BG104S =	0.0	LB SULFUR/HR
CYCLONE DUST 4" UNIT	(D-1C1) / BD101A =	0.0004	LB SULFUR/HR
FILTER DUST 4" UNIT	(D-1C2) / BD102A =	0.0	LB SULFUR/HR
TOTAL SULFUR OUT :		7.8398	LB SULFUR/HR

HYDROGEN MATERIAL BALANCE:

SULFUR GENERATOR

IN

INLET GAS AS H2	(G-2C3) / BG203C =	0.0	LB HYDROGEN/HR
INLET GAS AS H2S (CYL)	(G-2C3) / BG203B =	0.4908	LB HYDROGEN/HR
INLET GAS AS H2S (PROC)	(G-2C3) / BG203 =	0.0	LB HYDROGEN/HR
INLET GAS AS H2O	(G-2C3) / BG203D =	0.0	LB HYDROGEN/HR
INLET CARBON	(C-2C1) / BC201H =	0.4914	LB HYDROGEN/HR
TOTAL IN:	(RV-2CC) / HI2CO =	0.9823	LB HYDROGEN/HR

OUT

OUTLET GAS AS H2	(G-2C5) / BG205C =	0.0	LB HYDROGEN/HR
OUTLET GAS AS H2S	(G-2C5) / BG205H =	0.0750	LB HYDROGEN/HR
OUTLET GAS AS H2O	(G-2C5) / BG205D =	0.6319	LB HYDROGEN/HR
OUTLET CARBON	(C-2C2) / BC202H =	0.0939	LB HYDROGEN/HR
TOTAL OUT:	(RV-2CC) / HO2CO =	0.8007	LB HYDROGEN/HR

H2S GENERATOR SULFUR STRIPPER

IN

INLET GAS AS H2	(C-1C3) / BG103C =	0.4921	LB HYDROGEN/HR
INLET CARBON	(C-2C2) / BC202H =	0.0939	LB HYDROGEN/HR
TOTAL IN:	(RV-1CC) / HI1CO =	0.5860	LB HYDROGEN/HR

OUT

OUTLET GAS AS H2	(G-1C4) / BG104C =	0.0	LB HYDROGEN/HR
OUTLET GAS AS H2S	(G-1C4) / BG104H =	0.3974	LB HYDROGEN/HR
OUTLET GAS AS H2O	(G-1C4) / BG104D =	0.1033	LB HYDROGEN/HR
TOTAL OUT:	(RV-1CC) / HO1CO =	0.5007	LB HYDROGEN/HR

APPENDIX A-12-5

EXPERIMENTAL DATA AND RESULTS FOR INTEGRAL RUN IR-2-7 (66 - 81 hours)

STATUS REPORT OF OPERATING CONDITIONS FOR INTEGRATED OPERATION OF SO2 RECOVERY PROCESS

OPERATING PERIOD:

DATE: 4/22/74 TIME OF RECORD: 21:15 HRS TO 24: 0 HRS
DATE: 4/23/74 TIME OF RECORD: 0: 0 HRS TO 12:15 HRS

PROCESS ELAPSED TIME OF PERIOD: START 66.00 HRS / END 81.00 HRS LENGTH OF PERIOD: 15.00 HRS

PROCESS VARIABLES FOR OPERATING PERIOD:

S O 2 S C R B E R

22:15 HRS	67.00 HRS (ET)	SO2 CONC INLET FLUE GAS	(GS- 10) / Y10(1,T)	=	2075.000	PPM (VOLUME)
2:15 HRS	71.00 HRS (ET)	SO2 CONC INLET FLUE GAS	(GS- 10) / Y10(1,T)	=	2050.000	PPM (VOLUME)
6:15 HRS	75.00 HRS (ET)	SO2 CONC INLET FLUE GAS	(GS- 10) / Y10(1,T)	=	2125.000	PPM (VOLUME)
10:15 HRS	79.00 HRS (ET)	SO2 CONC INLET FLUE GAS	(GS- 10) / Y10(1,T)	=	2100.000	PPM (VOLUME)
	A V E R A G E :	SO2 CONC INLET FLUE GAS	(GS- 10) / AY10A	=	2087.500	PPM (VOLUME)
22:15 HRS	67.00 HRS (ET)	SO2 CONC OUTLET FLUE GAS	(GS- 16) / Y16(1,T)	=	67.000	PPM (VOLUME)
2:15 HRS	71.00 HRS (ET)	SO2 CONC OUTLET FLUE GAS	(GS- 16) / Y16(1,T)	=	65.000	PPM (VOLUME)
6:15 HRS	75.00 HRS (ET)	SO2 CONC OUTLET FLUE GAS	(GS- 16) / Y16(1,T)	=	60.000	PPM (VOLUME)
10:45 HRS	79.50 HRS (ET)	SO2 CONC OUTLET FLUE GAS	(GS- 16) / Y16(1,T)	=	117.500	PPM (VOLUME)
	A V E R A G E :	SO2 CONC OUTLET FLUE GAS	(GS- 16) / AY16A	=	77.375	PPM (VOLUME)
21:15 HRS	66.00 HRS (ET)	H2O CONC INLET FLUE GAS	(GS- 10) / Y10(4,T)	=	10.000	% (VOLUME)
12:15 HRS	81.00 HRS (ET)	H2O CONC INLET FLUE GAS	(GS- 10) / Y10(4,T)	=	10.000	% (VOLUME)
	A V E R A G E :	H2O CONC INLET FLUE GAS	(GS- 10) / AY10D	=	10.000	% (VOLUME)
2:15 HRS	71.00 HRS (ET)	ORIFICE PRESSURE DROP	(DP- 10) / DP10(T)	=	2.200	INCHES H2O
10:15 HRS	79.00 HRS (ET)	ORIFICE PRESSURE DROP	(DP- 10) / DP10(T)	=	2.300	INCHES H2O
18:15 HRS	87.00 HRS (ET)	ORIFICE PRESSURE DROP	(DP- 10) / DP10(T)	=	2.200	INCHES H2O
	A V E R A G E :	ORIFICE PRESSURE DROP	(DP- 10) / ADP10	=	2.233	INCHES H2O
22: 2 HRS	66.80 HRS (ET)	ORIFICE TEMPERATURE	(TL- 10) / TL10(T)	=	317.000	DEG F
0:20 HRS	69.10 HRS (ET)	ORIFICE TEMPERATURE	(TL- 10) / TL10(T)	=	313.000	DEG F
4:15 HRS	73.00 HRS (ET)	ORIFICE TEMPERATURE	(TL- 10) / TL10(T)	=	320.000	DEG F
7:20 HRS	76.10 HRS (ET)	ORIFICE TEMPERATURE	(TL- 10) / TL10(T)	=	317.000	DEG F
10:15 HRS	79.00 HRS (ET)	ORIFICE TEMPERATURE	(TL- 10) / TL10(T)	=	319.000	DEG F
12:15 HRS	81.00 HRS (ET)	ORIFICE TEMPERATURE	(TL- 10) / TL10(T)	=	317.000	DEG F
	A V E R A G E :	ORIFICE TEMPERATURE	(TL- 10) / ATL10	=	317.167	DEG F
20:15 HRS	65.00 HRS (ET)	WEIGHT CYCLONE DUST	(D- 11) / CD11(T)	=	0.0	LB DUST
4:15 HRS	73.00 HRS (ET)	WEIGHT CYCLONE DUST	(D- 11) / CD11(T)	=	2.100	LB DUST
12:15 HRS	81.00 HRS (ET)	WEIGHT CYCLONE DUST	(D- 11) / CD11(T)	=	1.700	LB DUST
	T O T A L :	WEIGHT CYCLONE DUST	(D- 11) / WD11	=	3.800	LB DUST
	R A T E :	WEIGHT CYCLONE DUST	(D- 11) / RD11	=	0.237	LB DUST/HR
21:15 HRS	66.00 HRS (ET)	WEIGHT COLLECTOR DUST	(D- 12) / CD12(T)	=	0.0	LB DUST
12:15 HRS	81.00 HRS (ET)	WEIGHT COLLECTOR DUST	(D- 12) / CD12(T)	=	0.0	LB DUST
	T O T A L :	WEIGHT COLLECTOR DUST	(D- 12) / WD12	=	0.0	LB DUST
	R A T E :	WEIGHT COLLECTOR DUST	(D- 12) / RD12	=	0.0	LB DUST/HR
20:15 HRS	65.00 HRS (ET)	WEIGHT CARBON WEEPAGE	(CW- 12) / CW12(T)	=	0.0	LB DUST
4:15 HRS	73.00 HRS (ET)	WEIGHT CARBON WEEPAGE	(CW- 12) / CW12(T)	=	0.0	LB DUST
12:15 HRS	81.00 HRS (ET)	WEIGHT CARBON WEEPAGE	(CW- 12) / CW12(T)	=	0.088	LB DUST

	T O T A L :	WEIGHT CARBON WEEPAGE	(CW- 12) /	WCW12	=	0.088 LB DUST
	R A T E :	WEIGHT CARBON WEEPAGE	(CW- 12) /	RCW12	=	0.005 LB DUST/HR
21:15 HRS	66.00 HRS (ET)	% TOT S ON CYCLONE DUST	(D- 11) /	D11(1,T)	=	0.0 % (WEIGHT)
12:15 HRS	81.00 HRS (ET)	% TOT S ON CYCLONE DUST	(D- 11) /	D11(1,T)	=	0.0 % (WEIGHT)
	A V E R A G E :	% TOT S ON CYCLONE DUST	(D- 11) /	AD11A	=	0.0 % (WEIGHT)
4:15 HRS	73.00 HRS (ET)	% TOT S ON COLLECTOR DUST	(D- 12) /	D12(1,T)	=	7.020 % (WEIGHT)
12:15 HRS	81.00 HRS (ET)	% TOT S ON COLLECTOR DUST	(D- 12) /	D12(1,T)	=	6.740 % (WEIGHT)
	A V E R A G E :	% TOT S ON COLLECTOR DUST	(D- 12) /	AD12A	=	6.880 % (WEIGHT)

6" DIA CARBON PRECONDITIONER

1:15 HRS	70.00 HRS (ET)	% TOT S ON INLET CARBON	(CS-301) / Z301(1,T) =	8.880	% (WEIGHT)
5:15 HRS	74.00 HRS (ET)	% TOT S ON INLET CARBON	(CS-301) / Z301(1,T) =	8.640	% (WEIGHT)
9:15 HRS	78.00 HRS (ET)	% TOT S ON INLET CARBON	(CS-301) / Z301(1,T) =	8.620	% (WEIGHT)
	A V E R A G E :	% TOT S ON INLET CARBON	(CS-301) / AZ301A =	8.713	% (WEIGHT)
5:15 HRS	74.00 HRS (ET)	% H2O ON INLET CARBON	(CS-301) / Z301(2,T) =	10.800	% (WEIGHT)
9:15 HRS	78.00 HRS (ET)	% H2O ON INLET CARBON	(CS-301) / Z301(2,T) =	7.900	% (WEIGHT)
	A V E R A G E :	% H2O ON INLET CARBON	(CS-301) / AZ301B =	9.350	% (WEIGHT)
20:15 HRS	65.00 HRS (ET)	WEIGHT CYCLONE DUST	(D-301) / CD301(T) =	0.0	LB DUST
12:15 HRS	81.00 HRS (ET)	WEIGHT CYCLONE DUST	(D-301) / CD301(T) =	0.0	LB DUST
	T O T A L :	WEIGHT CYCLONE DUST	(D-301) / WD301 =	0.0	LB DUST
	R A T E :	WEIGHT CYCLONE DUST	(D-301) / RD301 =	0.0	LB DUST/HR
21:15 HRS	66.00 HRS (ET)	% TOT S ON CYCLONE DUST	(D-301) / D301(1,T) =	0.0	% (WEIGHT)
12:15 HRS	81.00 HRS (ET)	% TOT S ON CYCLONE DUST	(D-301) / D301(1,T) =	0.0	% (WEIGHT)
	A V E R A G E :	% TOT S ON CYCLONE DUST	(D-301) / AD301A =	0.0	% (WEIGHT)

S U L F U R G E N E R A T O R

21:56 HRS	66.70 HRS (ET)	SO2 CONC OUTLET GAS	(GS-206) / Y206(1,T) =	0.950	% (VOLUME)
2:56 HRS	71.70 HRS (ET)	SO2 CONC OUTLET GAS	(GS-206) / Y206(1,T) =	1.210	% (VOLUME)
6:45 HRS	75.50 HRS (ET)	SO2 CONC OUTLET GAS	(GS-206) / Y206(1,T) =	1.300	% (VOLUME)
	A V E R A G E :	SO2 CONC OUTLET GAS	(GS-206) / AY206A =	1.153	% (VOLUME)
0:56 HRS	69.70 HRS (ET)	H2S CONC INLET GAS	(GS-200) / Y200(2,T) =	32.200	% (VOLUME)
16:15 HRS	85.00 HRS (ET)	H2S CONC INLET GAS	(GS-200) / Y200(2,T) =	27.200	% (VOLUME)
	A V E R A G E :	H2S CONC INLET GAS	(GS-200) / AY200B =	29.700	% (VOLUME)
21:56 HRS	66.70 HRS (ET)	H2S CONC OUTLET GAS	(GS-206) / Y206(2,T) =	3.200	% (VOLUME)
2:56 HRS	71.70 HRS (ET)	H2S CONC OUTLET GAS	(GS-206) / Y206(2,T) =	0.700	% (VOLUME)
6:45 HRS	75.50 HRS (ET)	H2S CONC OUTLET GAS	(GS-206) / Y206(2,T) =	0.500	% (VOLUME)
	A V E R A G E :	H2S CONC OUTLET GAS	(GS-206) / AY206B =	1.467	% (VOLUME)
0:56 HRS	69.70 HRS (ET)	H2 CONC INLET GAS	(GS-200) / Y200(3,T) =	0.0	% (VOLUME)
16:15 HRS	85.00 HRS (ET)	H2 CONC INLET GAS	(GS-200) / Y200(3,T) =	0.0	% (VOLUME)
	A V E R A G E :	H2 CONC INLET GAS	(GS-200) / AY200C =	0.0	% (VOLUME)
21:56 HRS	66.70 HRS (ET)	H2 CONC OUTLET GAS	(GS-206) / Y206(3,T) =	0.0	% (VOLUME)
2:56 HRS	71.70 HRS (ET)	H2 CONC OUTLET GAS	(GS-206) / Y206(3,T) =	0.0	% (VOLUME)
	A V E R A G E :	H2 CONC OUTLET GAS	(GS-206) / AY206C =	0.0	% (VOLUME)
0:56 HRS	69.70 HRS (ET)	H2O CONC INLET GAS	(GS-200) / Y200(4,T) =	14.000	% (VOLUME)
16:15 HRS	85.00 HRS (ET)	H2O CONC INLET GAS	(GS-200) / Y200(4,T) =	21.200	% (VOLUME)
	A V E R A G E :	H2O CONC INLET GAS	(GS-200) / AY200D =	17.600	% (VOLUME)
21:56 HRS	66.70 HRS (ET)	H2O CONC OUTLET GAS	(GS-206) / Y206(4,T) =	49.600	% (VOLUME)
2:56 HRS	71.70 HRS (ET)	H2O CONC OUTLET GAS	(GS-206) / Y206(4,T) =	52.500	% (VOLUME)
6:45 HRS	75.50 HRS (ET)	H2O CONC OUTLET GAS	(GS-206) / Y206(4,T) =	52.900	% (VOLUME)
	A V E R A G E :	H2O CONC OUTLET GAS	(GS-206) / AY206D =	51.667	% (VOLUME)
0:56 HRS	69.70 HRS (ET)	N2 CONC INLET GAS	(GS-200) / Y200(5,T) =	53.300	% (VOLUME)
2:15 HRS	85.00 HRS (ET)	N2 CONC INLET GAS	(GS-200) / Y200(5,T) =	51.100	% (VOLUME)
	A V E R A G E :	N2 CONC INLET GAS	(GS-200) / AY200E =	52.200	% (VOLUME)
21:56 HRS	66.70 HRS (ET)	N2 CONC OUTLET GAS	(GS-206) / Y206(5,T) =	45.800	% (VOLUME)
2:56 HRS	71.70 HRS (ET)	N2 CONC OUTLET GAS	(GS-206) / Y206(5,T) =	45.200	% (VOLUME)
6:45 HRS	75.50 HRS (ET)	N2 CONC OUTLET GAS	(GS-206) / Y206(5,T) =	45.000	% (VOLUME)
	A V E R A G E :	N2 CONC OUTLET GAS	(GS-206) / AY206E =	45.333	% (VOLUME)
21:15 HRS	66.00 HRS (ET)	N2 INLET VOL FLOW RATE	(G-200) / G200(5,T) =	121.000	CFH (70 DEG F)
12:15 HRS	81.00 HRS (ET)	N2 INLET VOL FLOW RATE	(G-200) / G200(5,T) =	121.000	CFH (70 DEG F)
	A V E R A G E :	N2 INLET VOL FLOW RATE	(G-200) / AG200E =	121.000	CFH (70 DEG F)
1:15 HRS	70.00 HRS (ET)	% TOT S ON INLET CARBON	(CS-302) / Z302(1,T) =	8.880	% (WEIGHT)
5:15 HRS	74.00 HRS (ET)	% TOT S ON INLET CARBON	(CS-302) / Z302(1,T) =	8.640	% (WEIGHT)
9:15 HRS	78.00 HRS (ET)	% TOT S ON INLET CARBON	(CS-302) / Z302(1,T) =	8.620	% (WEIGHT)
	A V E R A G E :	% TOT S ON INLET CARBON	(CS-302) / AZ302A =	8.713	% (WEIGHT)
1:15 HRS	70.00 HRS (ET)	% TOT S ON OUTLET CARBON	(CS-200) / Z200(1,T) =	21.600	% (WEIGHT)
5:15 HRS	74.00 HRS (ET)	% TOT S ON OUTLET CARBON	(CS-200) / Z200(1,T) =	23.400	% (WEIGHT)
9:15 HRS	78.00 HRS (ET)	% TOT S ON OUTLET CARBON	(CS-200) / Z200(1,T) =	20.200	% (WEIGHT)
	A V E R A G E :	% TOT S ON OUTLET CARBON	(CS-200) / AZ200A =	21.733	% (WEIGHT)
5:15 HRS	74.00 HRS (ET)	% H2O ON INLET CARBON	(CS-302) / Z302(2,T) =	10.800	% (WEIGHT)
9:15 HRS	78.00 HRS (ET)	% H2O ON INLET CARBON	(CS-302) / Z302(2,T) =	7.900	% (WEIGHT)
	A V E R A G E :	% H2O ON INLET CARBON	(CS-302) / AZ302B =	9.350	% (WEIGHT)

1:15 HRS	70.00 HRS (ET)	% H2O ON OUTLET CARBON	(CS-200) / Z200(2,T) =	1.600 % (WEIGHT)
5:15 HRS	74.00 HRS (ET)	% H2O ON OUTLET CARBON	(CS-200) / Z200(2,T) =	1.800 % (WEIGHT)
9:15 HRS	78.00 HRS (ET)	% H2O ON OUTLET CARBON	(CS-200) / Z200(2,T) =	1.900 % (WEIGHT)
	A V E R A G E :	% H2O ON OUTLET CARBON	(CS-200) / AZ200B =	1.767 % (WEIGHT)
1:15 HRS	70.00 HRS (ET)	% ACID ON OUTLET CARBON	(CS-200) / Z200(3,T) =	0.880 % (WEIGHT)
5:15 HRS	74.00 HRS (ET)	% ACID ON OUTLET CARBON	(CS-200) / Z200(3,T) =	1.350 % (WEIGHT)
9:15 HRS	78.00 HRS (ET)	% ACID ON OUTLET CARBON	(CS-200) / Z200(3,T) =	1.760 % (WEIGHT)
	A V E R A G E :	% ACID ON OUTLET CARBON	(CS-200) / AZ200C =	1.330 % (WEIGHT)

H 2 S G E N E R A T O R / S U L F U R S T R I P P E R

22:56 HRS	67.70 HRS (ET)	H2 CONC INLET GAS	(GS-100) / Y100(3,T) =	50.700	% (VOLUME)
13: 2 HRS	81.90 HRS (ET)	H2 CONC INLET GAS	(GS-100) / Y100(3,T) =	50.700	% (VOLUME)
	A V E R A G E :	H2 CONC INLET GAS	(GS-100) / AY100C =	50.700	% (VOLUME)
0: 8 HRS	68.90 HRS (ET)	H2 CONC OUTLET GAS	(GS-108) / Y108(3,T) =	0.0	% (VOLUME)
4:56 HRS	73.70 HRS (ET)	H2 CONC OUTLET GAS	(GS-108) / Y108(3,T) =	0.0	% (VOLUME)
0:38 HRS	93.40 HRS (ET)	H2 CONC OUTLET GAS	(GS-108) / Y108(3,T) =	0.0	% (VOLUME)
	A V E R A G E :	H2 CONC OUTLET GAS	(GS-108) / AY108C =	0.0	% (VOLUME)
22:56 HRS	67.70 HRS (ET)	N2 CONC INLET GAS	(GS-100) / Y100(5,T) =	49.300	% (VOLUME)
13: 2 HRS	81.80 HRS (ET)	N2 CONC INLET GAS	(GS-100) / Y100(5,T) =	49.300	% (VOLUME)
	A V E R A G E :	N2 CONC INLET GAS	(GS-100) / AY100E =	49.300	% (VOLUME)
0: 8 HRS	68.90 HRS (ET)	N2 CONC OUTLET GAS	(GS-108) / Y108(5,T) =	54.100	% (VOLUME)
4:56 HRS	73.70 HRS (ET)	N2 CONC OUTLET GAS	(GS-108) / Y108(5,T) =	52.500	% (VOLUME)
14:38 HRS	83.40 HRS (ET)	N2 CONC OUTLET GAS	(GS-108) / Y108(5,T) =	50.500	% (VOLUME)
	A V E R A G E :	N2 CONC OUTLET GAS	(GS-108) / AY108E =	52.367	% (VOLUME)
0: 8 HRS	68.90 HRS (ET)	H2S CONC OUTLET GAS	(GS-108) / Y108(2,T) =	34.400	% (VOLUME)
4:56 HRS	73.70 HRS (ET)	H2S CONC OUTLET GAS	(GS-108) / Y108(2,T) =	32.900	% (VOLUME)
14:38 HRS	83.40 HRS (ET)	H2S CONC OUTLET GAS	(GS-108) / Y108(2,T) =	29.600	% (VOLUME)
	A V E R A G E :	H2S CONC OUTLET GAS	(GS-108) / AY108B =	32.300	% (VOLUME)
0: 8 HRS	68.90 HRS (ET)	H2O CONC OUTLET GAS	(GS-108) / Y108(4,T) =	11.000	% (VOLUME)
4:56 HRS	73.70 HRS (ET)	H2O CONC OUTLET GAS	(GS-108) / Y108(4,T) =	14.100	% (VOLUME)
14:38 HRS	83.40 HRS (ET)	H2O CONC OUTLET GAS	(GS-108) / Y108(4,T) =	19.500	% (VOLUME)
	A V E R A G E :	H2O CONC OUTLET GAS	(GS-108) / AY108D =	14.867	% (VOLUME)
21:15 HRS	66.00 HRS (ET)	N2 INLET VOL FLOW RATE	(G-100) / G100(5,T) =	121.000	CFH (70 DEG F)
12:15 HRS	81.00 HRS (ET)	N2 INLET VOL FLOW RATE	(G-100) / G100(5,T) =	121.000	CFH (70 DEG F)
	A V E R A G E :	N2 INLET VOL FLOW RATE	(G-100) / AG100E =	121.000	CFH (70 DEG F)
20:15 HRS	65.00 HRS (ET)	WEIGHT CYCLONE DUST	(D-101) / CD101(T) =	0.0	LB DUST
4:15 HRS	73.00 HRS (ET)	WEIGHT CYCLONE DUST	(D-101) / CD101(T) =	0.0	LB DUST
12:15 HRS	81.00 HRS (ET)	WEIGHT CYCLONE DUST	(D-101) / CD101(T) =	0.0	LB DUST
	T O T A L :	WEIGHT CYCLONE DUST	(D-101) / WD101 =	0.0	LB DUST
	R A T E :	WEIGHT CYCLONE DUST	(D-101) / RD101 =	0.0	LB DUST/HR
20:15 HRS	65.00 HRS (ET)	WEIGHT FILTER DUST	(D-102) / CD102(T) =	0.0	LB DUST
12:15 HRS	81.00 HRS (ET)	WEIGHT FILTER DUST	(D-102) / CD102(T) =	0.0	LB DUST
	T O T A L :	WEIGHT FILTER DUST	(D-102) / WD102 =	0.0	LB DUST
	R A T E :	WEIGHT FILTER DUST	(D-102) / RD102 =	0.0	LB DUST/HR
1:15 HRS	70.00 HRS (ET)	% TOT S ON CYCLONE DUST	(D-101) / D101(1,T) =	5.160	% (WEIGHT)
5:15 HRS	74.00 HRS (ET)	% TOT S ON CYCLONE DUST	(D-101) / D101(1,T) =	5.280	% (WEIGHT)
9:15 HRS	78.00 HRS (ET)	% TOT S ON CYCLONE DUST	(D-101) / D101(1,T) =	3.880	% (WEIGHT)
	A V E R A G E :	% TOT S ON CYCLONE DUST	(D-101) / AD101A =	4.773	% (WEIGHT)
21:15 HRS	66.00 HRS (ET)	% TOT S ON FILTER DUST	(D-102) / D102(1,T) =	0.0	% (WEIGHT)
12:15 HRS	81.00 HRS (ET)	% TOT S ON FILTER DUST	(D-102) / D102(1,T) =	0.0	% (WEIGHT)
	A V E R A G E :	% TOT S ON FILTER DUST	(D-102) / AD102A =	0.0	% (WEIGHT)

CARBON INVENTORY HOPPER

1:15 HRS	70.00 HRS (ET)	% RESIDUAL S ON CARBON	(CS- 90) /	Z90(1,T) =	5.160 % (WEIGHT)
5:15 HRS	74.00 HRS (ET)	% RESIDUAL S ON CARBON	(CS- 90) /	Z90(1,T) =	5.280 % (WEIGHT)
9:15 HRS	78.00 HRS (ET)	% RESIDUAL S ON CARBON	(CS- 90) /	Z90(1,T) =	3.880 % (WEIGHT)
	A V E R A G E :	% RESIDUAL S ON CARBON	(CS- 90) /	AZ90A =	4.773 % (WEIGHT)
1:15 HRS	70.00 HRS (ET)	% RESIDUAL H2O ON CARBON	(CS- 90) /	Z90(2,T) =	2.230 % (WEIGHT)
5:15 HRS	74.00 HRS (ET)	% RESIDUAL H2O ON CARBON	(CS- 90) /	Z90(2,T) =	2.230 % (WEIGHT)
9:15 HRS	78.00 HRS (ET)	% RESIDUAL H2O ON CARBON	(CS- 90) /	Z90(2,T) =	2.230 % (WEIGHT)
	A V E R A G E :	% RESIDUAL H2O ON CARBON	(CS- 90) /	AZ90B =	2.230 % (WEIGHT)
21:15 HRS	66.00 HRS (ET)	CARBON RECYCLE RATE	(C- 90) /	C90(1,T) =	31.000 LB MAT'L/HR
12:15 HRS	81.00 HRS (ET)	CARBON RECYCLE RATE	(C- 90) /	C90(1,T) =	31.000 LB MAT'L/HR
	A V E R A G E :	CARBON RECYCLE RATE	(C- 90) /	AC90A =	31.000 LB MAT'L/HR

SULFUR CONDENSER

20:15 HRS	65.00 HRS (ET)	WEIGHT SULFUR COLLECTED	(S-401) /	S401(T) =	0.0 LB SULFUR
23:15 HRS	68.00 HRS (ET)	WEIGHT SULFUR COLLECTED	(S-401) /	S401(T) =	9.250 LB SULFUR
3:15 HRS	72.00 HRS (ET)	WEIGHT SULFUR COLLECTED	(S-401) /	S401(T) =	9.750 LB SULFUR
7:15 HRS	76.00 HRS (ET)	WEIGHT SULFUR COLLECTED	(S-401) /	S401(T) =	7.400 LB SULFUR
11:15 HRS	80.00 HRS (ET)	WEIGHT SULFUR COLLECTED	(S-401) /	S401(T) =	7.500 LB SULFUR
	T O T A L :	WEIGHT SULFUR COLLECTED	(S-401) /	WS401 =	33.900 LB SULFUR
	R A T E :	WEIGHT SULFUR COLLECTED	(S-401) /	RS401 =	2.260 LB SULFUR/HR

STATUS REPORT OF OPERATING CONDITIONS FOR INTEGRATED OPERATION OF SO2 RECOVERY PROCESS

OPERATING PERIOD:

DATE: 4/22/74 TIME OF RECORD: 21:15 HRS TO 24: 0 HRS
DATE: 4/23/74 TIME OF RECORD: 0: 0 HRS TO 12:15 HRS

PROCESS ELAPSED TIME OF PERIOD: START 66.00 HRS / END 81.00 HRS LENGTH OF PERIOD: 15.00 HRS

SUMMARY OF INTEGRATED PROCESS PERFORMANCE:

1.	SO2 REMOVAL	PRSO2 =	96.29 % (ACTUAL)	90.0 % (GOAL)
2.	H2S UTILIZATION	PUH2S =	94.31 % (ACTUAL)	95.0 % (GOAL)
3.	ACID CONVERSION (TO SULFUR)	PVCS =	81.66 % (ACTUAL)	99.0 % (GOAL)
4.	H2 UTILIZATION (TO H2S)	PHCHS =	78.56 % (ACTUAL)	90.0 % (GOAL)
5.	SULFUR RECOVERY	PRS =	97.40 % (ACTUAL)	100.0 % (GOAL) OF SORBED SO2
			33.20 % (ACTUAL)	25.0 % (GOAL) OF STRIPPED SULFUR
6.	H2 UTILIZATION 4" UNIT	PUH2 =	100.00 %	
7.	RESIDUAL SULFUR ON CARBON	X90A =	0.0513 LB S/LB C	
8.	CARBON RECYCLE RATE (DB)	RC90 =	28.829 LB C(DB)/HR	
9.	ACID LOADING INLET CARBON 6" UNIT	X301C =	0.2158 LB ACID/LB C	
10.	MOISTURE CONTENT INLET CARBON 6" UNIT	X301B =	0.1307 LB H2O/LB C	
11.	ACID LOADING INLET CARBON 8" UNIT	X302C =	0.2158 LB ACID/LB C	
12.	MOISTURE CONTENT INLET CARBON 8" UNIT	X302B =	0.1307 LB H2O/LB C	
13.	TOTAL ACID CONVERTED 8" UNIT	PVC =	91.85 %	
14.	SULFUR CONVERSION (TO H2S)	PSCHS =	90.89 %	
15.	SULFUR CONDENSER EFFICIENCY	ERV40C=	364.24 %	

MAJOR EVENTS DURING OPERATING PERIOD:

SWITCHED TO PROCESS H2S AT 66.4 HRS.
WITH INLET PRESSURE AT 46" TO 52" H2O
SULFUR CONDENSER WAS ON STREAM DURING PERIOD

STATUS REPORT OF OPERATING CONDITIONS FOR INTEGRATED OPERATION OF SO2 RECOVERY PROCESS

OPERATING PERIOD:

DATE: 4/22/74 TIME OF RECORD: 21:15 HRS TO 24: 0 HRS
DATE: 4/23/74 TIME OF RECORD: 0: 0 HRS TO 12:15 HRS

PROCESS ELAPSED TIME OF PERIOD: START 66.00 HRS / END 81.00 HRS LENGTH OF PERIOD: 15.00 HRS

SULFUR MATERIAL BALANCE (USING PROCESS H2S):

S O 2 S C R B E R

I N				
	INLET GAS AS SO2	(G- 13) /	BG10A =	2.4097 LB SULFUR/HR
	INLET C AS RESIDUAL S	(C- 11) /	BC11A =	1.4797 LB SULFUR/HR
	T O T A L I N :	(RV- 10) /	SI10 =	3.8894 LB SULFUR/HR
O U T				
	OUTLET GAS AS SO2	(G- 13) /	BG13A =	0.0893 LB SULFUR/HR
	OUTLET CARBON	(C- 12) /	BC12A =	3.5114 LB SULFUR/HR
	CYCLONE DUST	(D- 11) /	BD11A =	0.0 LB SULFUR/HR
	COLLECTOR DUST	(D- 12) /	BD12A =	0.0 LB SULFUR/HR
	CARBON WEEPAGE	(CW- 12) /	BCW12A =	0.0007 LB SULFUR/HR
	T O T A L O U T :	(RV- 10) /	SO10 =	3.6014 LB SULFUR/HR

6" D I A C A R B O N P R E C O N D I T I O N E R

I N				
	INLET CARBON	(C- 12) /	BC12A =	3.5114 LB SULFUR/HR
	T O T A L I N :	(RV-300) /	SI300 =	3.5114 LB SULFUR/HR
O U T				
	OUTLET CARBON	(C-201) /	BC201A =	3.5114 LB SULFUR/HR
	CYCLONE DUST	(D-301) /	BD301A =	0.0 LB SULFUR/HR
	T O T A L O U T :	(RV-300) /	SO300 =	3.5114 LB SULFUR/HR

S U L F U R G E N E R A T O R

I N				
	INLET GAS AS H2S (CYL)	(G-201) /	BG201B =	0.0 LB SULFUR/HR
	INLET GAS AS H2S (PROC)	(G-201) /	BG203R =	6.1871 LB SULFUR/HR
	INLET CARBON	(C-201) /	BC201A =	3.5114 LB SULFUR/HR
	T O T A L I N :	(RV-200) /	SI200 =	9.6985 LB SULFUR/HR
O U T				
	OUTLET GAS AS H2S	(G-205) /	BG205B =	0.3245 LB SULFUR/HR
	OUTLET GAS AS SO2	(G-205) /	BG205A =	0.2552 LB SULFUR/HR
	OUTLET CARBON	(C-202) /	BC202A =	8.2873 LB SULFUR/HR
	T O T A L O U T :	(RV-200) /	SO200 =	8.8670 LB SULFUR/HR

H2S GENERATOR / SULFUR STRIPPER

IN

INLET CARBON	(C-2C2) / BC202A =	8.2873	LB SULFUR/HR
TOTAL IN :	(RV-1CC) / SI1C0 =	8.2673	LB SULFUR/HR

OUT

OUTLET CARBON	(C-1C3) / BC103A =	1.4797	LB SULFUR/HR
OUTLET GAS AS H2S	(G-1C4) / BG104B =	6.1871	LB SULFUR/HR
OUTLET GAS AS S	(G-1C4) / BG104S =	2.2600	LB SULFUR/HR
CYCLONE DUST	(D-1C1) / BD101A =	0.0	LB SULFUR/HR
FILTER DUST	(D-1C2) / BD102A =	0.0	LB SULFUR/HR
TOTAL OUT :	(RV-1C0) / SO1C0 =	9.9268	LB SULFUR/HR

OVERALL SULFUR BALANCE

IN

INLET GAS 18" UNIT AS SC2	(G- 1C) / BG10A =	2.4097	LB SULFUR/HR
INLET GAS 8" UNIT AS CYL H2S	(G-2C1) / BG201B =	0.0	LB SULFUR/HR
TOTAL SULFUR IN :		2.4097	LB SULFUR/HR

OUT

OUTLET GAS 18" UNIT AS SC2	(G- 13) / BG13A =	0.0893	LB SULFUR/HR
CYCLONE DUST 18" UNIT	(D- 11) / BD11A =	0.0	LB SULFUR/HR
COLLECTOR DUST 18" UNIT	(D- 12) / BD12A =	0.0	LB SULFUR/HR
CARBON WEEPAGE 18" UNIT	(CW- 12) / BCW12A =	0.0007	LB SULFUR/HR
CYCLONE DUST 8" UNIT	(D-3C1) / BD201A =	0.0	LB SULFUR/HR
OUTLET GAS 8" UNIT AS H2S	(G-2C5) / BG205B =	0.3245	LB SULFUR/HR
OUTLET GAS 8" UNIT AS SC2	(G-2C5) / BG205A =	0.2552	LB SULFUR/HR
OUTLET GAS 4" UNIT AS H2S	(G-1C4) / BG104B =	0.0	LB SULFUR/HR
OUTLET GAS 4" UNIT AS S	(G-1C4) / BG104S =	2.2600	LB SULFUR/HR
CYCLONE DUST 4" UNIT	(D-1C1) / BD101A =	0.0	LB SULFUR/HR
FILTER DUST 4" UNIT	(D-1C2) / BD102A =	0.0	LB SULFUR/HR
TOTAL SULFUR OUT :		2.9297	LB SULFUR/HR

HYDROGEN MATERIAL BALANCE:

S U L F U R G E N E R A T O R

```
I N
        INLET GAS AS H2              ( G-2C3) / BG203C =      0.0     LB HYDROGEN/HR
        INLET GAS AS H2S (CYL)       ( G-2C3) / BG203B =      0.0     LB HYDROGEN/HR
        INLET GAS AS H2S (PROC)      ( G-2C3) / BG203  =      0.3866  LB HYDROGEN/HR
        INLET GAS AS H2O             ( G-2C3) / BG203D =      0.2113  LB HYDROGEN/HR
        INLET CARBON                 ( C-2C1) / BC201H =      0.5457  LB HYDROGEN/HR
            T O T A L   I N :        (RV-2CC) /  HI2CC =      1.1436  LB HYDROGEN/HR

O U T
        OUTLET GAS AS H2             ( G-2C5) / BG205C =      0.0     LB HYDROGEN/HR
        OUTLET GAS AS H2S            ( G-2C5) / BG205H =      0.0203  LB HYDROGEN/HR
        OUTLET GAS AS H2O            ( G-2C5) / BG205D =      0.7143  LB HYDROGEN/HR
        OUTLET CARBON                ( C-2C2) / BC202H =      0.0852  LB HYDROGEN/HR
            T O T A L   O U T :      (RV-2CC) /  HO2CC =      0.8198  LB HYDROGEN/HR
```

H 2 S G E N E R A T O R / S U L F U R S T R I P P E R

```
I N
        INLET GAS AS H2              ( G-1C3) / BG103C =      0.4921  LB HYDROGEN/HR
        INLET CARBON                 ( C-2C2) / BC202H =      0.0852  LB HYDROGEN/HR
            T O T A L   I N :        (RV-1CC) /  HI1CC =      0.5773  LB HYDROGEN/HR

O U T
        OUTLET GAS AS H2             ( G-1C4) / BG104C =      0.0     LB HYDROGEN/HR
        OUTLET GAS AS H2S            ( G-1C4) / BG104H =      0.3866  LB HYDROGEN/HR
        OUTLET GAS AS H2O            ( G-1C4) / BG104D =      0.1779  LB HYDROGEN/HR
            T O T A L   O U T :      (RV-1CC) /  HO1CC =      0.5645  LB HYDROGEN/HR
```

APPENDIX A-12-6

EXPERIMENTAL DATA AND RESULTS FOR INTEGRAL RUN IR-2-7 (81 - 96 hours)

STATUS REPORT OF OPERATING CONDITIONS FOR INTEGRATED OPERATION OF SO2 RECOVERY PROCESS

OPERATING PERIOD:

DATE: 4/23/74 TIME OF RECORD: 12:15 HRS TO 24: 0 HRS
DATE: 4/24/74 TIME OF RECORD: 0: 0 HRS TO 3:15 HRS

PROCESS ELAPSED TIME OF PERIOD: START 81.00 HRS / END 96.00 HRS LENGTH OF PERIOD: 15.00 HRS

PROCESS VARIABLES FOR OPERATING PERIOD:

S O 2 S C R B E R

15: 8 HRS	83.90 HRS (ET)	SO2 CONC INLET FLUE GAS	(GS- 10) /	Y10(1,T)	=	2000.000	PPM (VOLUME)
18:15 HRS	87.00 HRS (ET)	SO2 CONC INLET FLUE GAS	(GS- 10) /	Y10(1,T)	=	2025.000	PPM (VOLUME)
22:15 HRS	91.00 HRS (ET)	SO2 CONC INLET FLUE GAS	(GS- 10) /	Y10(1,T)	=	2000.000	PPM (VOLUME)
2:15 HRS	95.00 HRS (ET)	SO2 CONC INLET FLUE GAS	(GS- 10) /	Y10(1,T)	=	2000.000	PPM (VOLUME)
	A V E R A G E :	SO2 CONC INLET FLUE GAS	(GS- 10) /	AY10A	=	2006.250	PPM (VOLUME)
15:20 HRS	84.10 HRS (ET)	SO2 CONC OUTLET FLUE GAS	(GS- 16) /	Y16(1,T)	=	137.500	PPM (VOLUME)
18:15 HRS	87.00 HRS (ET)	SO2 CONC OUTLET FLUE GAS	(GS- 16) /	Y16(1,T)	=	115.000	PPM (VOLUME)
22:15 HRS	91.00 HRS (ET)	SO2 CONC OUTLET FLUE GAS	(GS- 16) /	Y16(1,T)	=	122.500	PPM (VOLUME)
0:32 HRS	93.30 HRS (ET)	SO2 CONC OUTLET FLUE GAS	(GS- 16) /	Y16(1,T)	=	120.000	PPM (VOLUME)
2:15 HRS	95.00 HRS (ET)	SO2 CONC OUTLET FLUE GAS	(GS- 16) /	Y16(1,T)	=	120.000	PPM (VOLUME)
	A V E R A G E :	SO2 CONC OUTLET FLUE GAS	(GS- 16) /	AY16A	=	123.000	PPM (VOLUME)
12:15 HRS	81.00 HRS (ET)	H2O CONC INLET FLUE GAS	(GS- 10) /	Y10(4,T)	=	10.000	% (VOLUME)
3:15 HRS	96.00 HRS (ET)	H2O CONC INLET FLUE GAS	(GS- 10) /	Y10(4,T)	=	10.000	% (VOLUME)
	A V E R A G E :	H2O CONC INLET FLUE GAS	(GS- 10) /	AY10D	=	10.000	% (VOLUME)
18:15 HRS	87.00 HRS (ET)	ORIFICE PRESSURE DROP	(DP- 10) /	DP10(T)	=	2.200	INCHES H2O
2:15 HRS	95.00 HRS (ET)	ORIFICE PRESSURE DROP	(DP- 10) /	DP10(T)	=	2.200	INCHES H2O
	A V E R A G E :	ORIFICE PRESSURE DROP	(DP- 10) /	ADP10	=	2.200	INCHES H2O
14:32 HRS	83.30 HRS (ET)	ORIFICE TEMPERATURE	(TL- 10) /	TL10(T)	=	317.000	DEG F
16:26 HRS	85.20 HRS (ET)	ORIFICE TEMPERATURE	(TL- 10) /	TL10(T)	=	322.000	DEG F
19:15 HRS	88.00 HRS (ET)	ORIFICE TEMPERATURE	(TL- 10) /	TL10(T)	=	320.000	DEG F
21:20 HRS	90.10 HRS (ET)	ORIFICE TEMPERATURE	(TL- 10) /	TL10(T)	=	321.000	DEG F
1:15 HRS	94.00 HRS (ET)	ORIFICE TEMPERATURE	(TL- 10) /	TL10(T)	=	319.000	DEG F
3:15 HRS	96.00 HRS (ET)	ORIFICE TEMPERATURE	(TL- 10) /	TL10(T)	=	319.000	DEG F
	A V E R A G E :	ORIFICE TEMPERATURE	(TL- 10) /	ATL10	=	319.667	DEG F
12:15 HRS	81.00 HRS (ET)	WEIGHT CYCLONE DUST	(D- 11) /	CD11(T)	=	0.0	LB DUST
20:15 HRS	89.00 HRS (ET)	WEIGHT CYCLONE DUST	(D- 11) /	CD11(T)	=	1.250	LB DUST
4:15 HRS	97.00 HRS (ET)	WEIGHT CYCLONE DUST	(D- 11) /	CD11(T)	=	1.500	LB DUST
	T O T A L :	WEIGHT CYCLONE DUST	(D- 11) /	WD11	=	2.750	LB DUST
	R A T E :	WEIGHT CYCLONE DUST	(D- 11) /	RD11	=	0.172	LB DUST/HR
12:15 HRS	81.00 HRS (ET)	WEIGHT COLLECTOR DUST	(D- 12) /	CD12(T)	=	0.0	LB DUST
4:15 HRS	97.00 HRS (ET)	WEIGHT COLLECTOR DUST	(D- 12) /	CD12(T)	=	0.0	LB DUST
	T O T A L :	WEIGHT COLLECTOR DUST	(D- 12) /	WD12	=	0.0	LB DUST
	R A T E :	WEIGHT COLLECTOR DUST	(D- 12) /	RD12	=	0.0	LB DUST/HR
12:15 HRS	81.00 HRS (ET)	WEIGHT CARBON WEEPAGE	(CW- 12) /	CW12(T)	=	0.0	LB DUST
20:15 HRS	89.00 HRS (ET)	WEIGHT CARBON WEEPAGE	(CW- 12) /	CW12(T)	=	0.068	LB DUST
4:15 HRS	97.00 HRS (ET)	WEIGHT CARBON WEEPAGE	(CW- 12) /	CW12(T)	=	0.057	LB DUST

	T O T A L :	WEIGHT CARBON WEEPAGE	(CW- 12) /	WCW12	=	0.125 LB DUST
	R A T E :	WEIGHT CARBON WEEPAGE	(CW- 12) /	RCW12	=	0.008 LB DUST/HR
12:15 HRS	81.00 HRS (ET)	% TOT S ON CYCLONE DUST	(D- 11) /	D11(1,T)	=	6.740 % (WEIGHT)
20:15 HRS	89.00 HRS (ET)	% TOT S ON CYCLONE DUST	(D- 11) /	D11(1,T)	=	7.120 % (WEIGHT)
4:15 HRS	97.00 HRS (ET)	% TOT S ON CYCLONE DUST	(D- 11) /	D11(1,T)	=	7.300 % (WEIGHT)
	A V E R A G E :	% TOT S ON CYCLONE DUST	(D- 11) /	AD11A	=	7.053 % (WEIGHT)
12:15 HRS	81.00 HRS (ET)	% TOT S ON COLLECTOR DUST	(D- 12) /	D12(1,T)	=	6.740 % (WEIGHT)
20:15 HRS	89.00 HRS (ET)	% TOT S ON COLLECTOR DUST	(D- 12) /	D12(1,T)	=	7.120 % (WEIGHT)
4:15 HRS	97.00 HRS (ET)	% TOT S ON COLLECTOR DUST	(D- 12) /	D12(1,T)	=	7.500 % (WEIGHT)
	A V E R A G E :	% TOT S ON COLLECTOR DUST	(D- 12) /	AD12A	=	7.120 % (WEIGHT)

6" DIA CARBON PRECONDITIONER

13:15 HRS	82.00 HRS (ET)	% TOT S ON INLET CARBON	(CS-301) / Z301(1,T) =	8.560	% (WEIGHT)
17:15 HRS	86.00 HRS (ET)	% TOT S ON INLET CARBON	(CS-301) / Z301(1,T) =	8.640	% (WEIGHT)
12:15 HRS	5.00 HRS (ET)	% TOT S ON INLET CARBON	(CS-301) / Z301(1,T) =	8.580	% (WEIGHT)
1:15 HRS	94.00 HRS (ET)	% TOT S ON INLET CARBON	(CS-301) / Z301(1,T) =	8.640	% (WEIGHT)
	A V E R A G E :	% TOT S ON INLET CARBON	(CS-301) / AZ301A =	8.605	% (WEIGHT)
13:15 HRS	82.00 HRS (ET)	% H20 ON INLET CARBON	(CS-301) / Z301(2,T) =	8.800	% (WEIGHT)
17:15 HRS	86.00 HRS (ET)	% H20 ON INLET CARBON	(CS-301) / Z301(2,T) =	6.400	% (WEIGHT)
21:15 HRS	90.00 HRS (ET)	% H20 ON INLET CARBON	(CS-301) / Z301(2,T) =	7.500	% (WEIGHT)
	A V E R A G E :	% H20 ON INLET CARBON	(CS-301) / AZ301B =	7.567	% (WEIGHT)
12:15 HRS	81.00 HRS (ET)	WEIGHT CYCLONE DUST	(D-301) / CD301(T) =	0.0	LB DUST
4:15 HRS	97.00 HRS (ET)	WEIGHT CYCLONE DUST	(D-301) / CD301(T) =	0.0	LB DUST
	T O T A L :	WEIGHT CYCLONE DUST	(D-301) / WD301 =	0.0	LB DUST
	R A T E :	WEIGHT CYCLONE DUST	(D-301) / RD301 =	0.0	LB DUST/HR
12:15 HRS	81.00 HRS (ET)	% TOT S ON CYCLONE DUST	(D-301) / D301(1,T) =	0.0	% (WEIGHT)
3:15 HRS	96.00 HRS (ET)	% TOT S ON CYCLONE DUST	(D-301) / D301(1,T) =	0.0	% (WEIGHT)
	A V E R A G E :	% TOT S ON CYCLONE DUST	(D-301) / AD301A =	0.0	% (WEIGHT)

S U L F U R G E N E R A T O R

17:50 HRS	86.60 HRS (ET)	SO2 CONC OUTLET GAS	(GS-206) / Y206(1,T) =	1.500	% (VOLUME)
0:15 HRS	93.00 HRS (ET)	SO2 CONC OUTLET GAS	(GS-206) / Y206(1,T) =	1.530	% (VOLUME)
6:15 HRS	99.00 HRS (ET)	SO2 CONC OUTLET GAS	(GS-206) / Y206(1,T) =	1.470	% (VOLUME)
	A V E R A G E :	SO2 CONC OUTLET GAS	(GS-206) / AY206A =	1.500	% (VOLUME)
16:15 HRS	85.00 HRS (ET)	H2S CONC INLET GAS	(GS-200) / Y200(2,T) =	27.200	% (VOLUME)
22:50 HRS	91.60 HRS (ET)	H2S CONC INLET GAS	(GS-200) / Y200(2,T) =	26.000	% (VOLUME)
4:26 HRS	97.20 HRS (ET)	H2S CONC INLET GAS	(GS-200) / Y200(2,T) =	26.800	% (VOLUME)
	A V E R A G E :	H2S CONC INLET GAS	(GS-200) / AY200B =	26.667	% (VOLUME)
17:50 HRS	86.60 HRS (ET)	H2S CONC OUTLET GAS	(GS-206) / Y206(2,T) =	0.0	% (VOLUME)
0:15 HRS	93.00 HRS (ET)	H2S CONC OUTLET GAS	(GS-206) / Y206(2,T) =	0.0	% (VOLUME)
6:15 HRS	99.00 HRS (ET)	H2S CONC OUTLET GAS	(GS-206) / Y206(2,T) =	0.0	% (VOLUME)
	A V E R A G E :	H2S CONC OUTLET GAS	(GS-206) / AY206B =	0.0	% (VOLUME)
16:15 HRS	85.00 HRS (ET)	H2 CONC INLET GAS	(GS-200) / Y200(3,T) =	0.0	% (VOLUME)
22:50 HRS	91.60 HRS (ET)	H2 CONC INLET GAS	(GS-200) / Y200(3,T) =	0.0	% (VOLUME)
4:26 HRS	97.20 HRS (ET)	H2 CONC INLET GAS	(GS-200) / Y200(3,T) =	0.0	% (VOLUME)
	A V E R A G E :	H2 CONC INLET GAS	(GS-200) / AY200C =	0.0	% (VOLUME)
17:50 HRS	86.60 HRS (ET)	H2 CONC OUTLET GAS	(GS-206) / Y206(3,T) =	0.0	% (VOLUME)
0:15 HRS	93.00 HRS (ET)	H2 CONC OUTLET GAS	(GS-206) / Y206(3,T) =	0.0	% (VOLUME)
6:15 HRS	99.00 HRS (ET)	H2 CONC OUTLET GAS	(GS-206) / Y206(3,T) =	0.0	% (VOLUME)
	A V E R A G E :	H2 CONC OUTLET GAS	(GS-206) / AY206C =	0.0	% (VOLUME)
16:15 HRS	85.00 HRS (ET)	H2O CONC INLET GAS	(GS-200) / Y200(4,T) =	21.200	% (VOLUME)
22:50 HRS	91.60 HRS (ET)	H2O CONC INLET GAS	(GS-200) / Y200(4,T) =	19.800	% (VOLUME)
4:26 HRS	97.20 HRS (ET)	H2O CONC INLET GAS	(GS-200) / Y200(4,T) =	20.000	% (VOLUME)
	A V E R A G E :	H2O CONC INLET GAS	(GS-200) / AY200D =	20.333	% (VOLUME)
17:50 HRS	86.60 HRS (ET)	H2O CONC OUTLET GAS	(GS-206) / Y206(4,T) =	53.200	% (VOLUME)
0:15 HRS	93.00 HRS (ET)	H2O CONC OUTLET GAS	(GS-206) / Y206(4,T) =	51.300	% (VOLUME)
6:15 HRS	99.00 HRS (ET)	H2O CONC OUTLET GAS	(GS-206) / Y206(4,T) =	50.500	% (VOLUME)
	A V E R A G E :	H2O CONC OUTLET GAS	(GS-206) / AY206D =	51.667	% (VOLUME)
2:15 HRS	95.00 HRS (ET)	N2 CONC INLET GAS	(GS-200) / Y200(5,T) =	51.100	% (VOLUME)
22:50 HRS	91.60 HRS (ET)	N2 CONC INLET GAS	(GS-200) / Y200(5,T) =	53.900	% (VOLUME)
4:26 HRS	97.20 HRS (ET)	N2 CONC INLET GAS	(GS-200) / Y200(5,T) =	52.800	% (VOLUME)
	A V E R A G E :	N2 CONC INLET GAS	(GS-200) / AY200E =	52.600	% (VOLUME)
17:50 HRS	86.60 HRS (ET)	N2 CONC OUTLET GAS	(GS-206) / Y206(5,T) =	45.000	% (VOLUME)
0:15 HRS	93.00 HRS (ET)	N2 CONC OUTLET GAS	(GS-206) / Y206(5,T) =	46.700	% (VOLUME)
6:15 HRS	99.00 HRS (ET)	N2 CONC OUTLET GAS	(GS-206) / Y206(5,T) =	47.700	% (VOLUME)
	A V E R A G E :	N2 CONC OUTLET GAS	(GS-206) / AY206E =	46.467	% (VOLUME)
12:15 HRS	81.00 HRS (ET)	N2 INLET VOL FLOW RATE	(G-200) / G200(5,T) =	121.000	CFH (70 DEG F)
3:15 HRS	96.00 HRS (ET)	N2 INLET VOL FLOW RATE	(G-200) / G200(5,T) =	121.000	CFH (70 DEG F)
	A V E R A G E :	N2 INLET VOL FLOW RATE	(G-200) / AG200E =	121.000	CFH (70 DEG F)
13:15 HRS	82.00 HRS (ET)	% TOT S ON INLET CARBON	(CS-302) / Z302(1,T) =	8.560	% (WEIGHT)
17:15 HRS	86.00 HRS (ET)	% TOT S ON INLET CARBON	(CS-302) / Z302(1,T) =	8.640	% (WEIGHT)
21:15 HRS	90.00 HRS (ET)	% TOT S ON INLET CARBON	(CS-302) / Z302(1,T) =	8.580	% (WEIGHT)
1:15 HRS	94.00 HRS (ET)	% TOT S ON INLET CARBON	(CS-302) / Z302(1,T) =	8.640	% (WEIGHT)
	A V E R A G E :	% TOT S ON INLET CARBON	(CS-302) / AZ302A =	8.605	% (WEIGHT)
13:15 HRS	82.00 HRS (ET)	% TOT S ON OUTLET CARBON	(CS-200) / Z200(1,T) =	19.800	% (WEIGHT)
17:15 HRS	86.00 HRS (ET)	% TOT S ON OUTLET CARBON	(CS-200) / Z200(1,T) =	19.600	% (WEIGHT)

21:15 HRS	90.00 HRS (ET)	% TOT S ON OUTLET CARBON	(CS-200) / Z200(1,T) =	21.100	% (WEIGHT)
1:15 HRS	94.00 HRS (ET)	% TOT S ON OUTLET CARBON	(CS-200) / Z200(1,T) =	19.200	% (WEIGHT)
	A V E R A G E :	% TOT S ON OUTLET CARBON	(CS-200) / AZ200A =	19.925	% (WEIGHT)
13:15 HRS	82.00 HRS (ET)	% H2O ON INLET CARBON	(CS-302) / Z302(2,T) =	8.800	% (WEIGHT)
17:15 HRS	86.00 HRS (ET)	% H2O ON INLET CARBON	(CS-302) / Z302(2,T) =	6.400	% (WEIGHT)
21:15 HRS	90.00 HRS (ET)	% H2O ON INLET CARBON	(CS-302) / Z302(2,T) =	7.500	% (WEIGHT)
	A V E R A G E :	% H2O ON INLET CARBON	(CS-302) / AZ302B =	7.567	% (WEIGHT)
13:15 HRS	82.00 HRS (ET)	% H2O ON OUTLET CARBON	(CS-200) / Z200(2,T) =	2.000	% (WEIGHT)
17:15 HRS	86.00 HRS (ET)	% H2O ON OUTLET CARBON	(CS-200) / Z200(2,T) =	2.800	% (WEIGHT)
21:15 HRS	90.00 HRS (ET)	% H2O ON OUTLET CARBON	(CS-200) / Z200(2,T) =	3.900	% (WEIGHT)
1:15 HRS	94.00 HRS (ET)	% H2O ON OUTLET CARBON	(CS-200) / Z200(2,T) =	3.100	% (WEIGHT)
	A V E R A G E :	% H2O ON OUTLET CARBON	(CS-200) / AZ200B =	2.950	% (WEIGHT)
13:15 HRS	82.00 HRS (ET)	% ACID ON OUTLET CARBON	(CS-200) / Z200(3,T) =	1.910	% (WEIGHT)
17:15 HRS	86.00 HRS (ET)	% ACID ON OUTLET CARBON	(CS-200) / Z200(3,T) =	2.350	% (WEIGHT)
21:15 HRS	90.00 HRS (ET)	% ACID ON OUTLET CARBON	(CS-200) / Z200(3,T) =	2.450	% (WEIGHT)
1:15 HRS	94.00 HRS (ET)	% ACID ON OUTLET CARBON	(CS-200) / Z200(3,T) =	2.450	% (WEIGHT)
	A V E R A G E :	% ACID ON OUTLET CARBON	(CS-200) / AZ200C =	2.290	% (WEIGHT)

H2S GENERATOR/SULFUR STRIPPER

13: 2 HRS	81.80 HRS (ET)	H2 CONC INLET GAS	(GS-100) / Y100(3,T) =	50.700	% (VOLUME)
19:15 HRS	88.00 HRS (ET)	H2 CONC INLET GAS	(GS-100) / Y100(3,T) =	51.200	% (VOLUME)
1: 2 HRS	93.80 HRS (ET)	H2 CONC INLET GAS	(GS-100) / Y100(3,T) =	50.600	% (VOLUME)
	A V E R A G E :	H2 CONC INLET GAS	(GS-100) / AY100C =	50.833	% (VOLUME)
14:38 HRS	83.40 HRS (ET)	H2 CONC OUTLET GAS	(GS-108) / Y108(3,T) =	0.0	% (VOLUME)
21:15 HRS	90.00 HRS (ET)	H2 CONC OUTLET GAS	(GS-108) / Y108(3,T) =	0.0	% (VOLUME)
3: 2 HRS	95.80 HRS (ET)	H2 CONC OUTLET GAS	(GS-108) / Y108(3,T) =	0.0	% (VOLUME)
	A V E R A G E :	H2 CONC OUTLET GAS	(GS-108) / AY108C =	0.0	% (VOLUME)
5:15 HRS	818.00 HRS (ET)	N2 CONC INLET GAS	(GS-100) / Y100(5,T) =	49.300	% (VOLUME)
19:15 HRS	88.00 HRS (ET)	N2 CONC INLET GAS	(GS-100) / Y100(5,T) =	48.800	% (VOLUME)
1: 2 HRS	93.80 HRS (ET)	N2 CONC INLET GAS	(GS-100) / Y100(5,T) =	49.400	% (VOLUME)
	A V E R A G E :	N2 CONC INLET GAS	(GS-100) / AY100E =	49.167	% (VOLUME)
14:38 HRS	83.40 HRS (ET)	N2 CONC OUTLET GAS	(GS-108) / Y108(5,T) =	50.500	% (VOLUME)
21:15 HRS	90.00 HRS (ET)	N2 CONC OUTLET GAS	(GS-108) / Y108(5,T) =	52.200	% (VOLUME)
3: 2 HRS	95.80 HRS (ET)	N2 CONC OUTLET GAS	(GS-108) / Y108(5,T) =	53.300	% (VOLUME)
	A V E R A G E :	N2 CONC OUTLET GAS	(GS-108) / AY108E =	52.000	% (VOLUME)
14:38 HRS	83.40 HRS (ET)	H2S CONC OUTLET GAS	(GS-108) / Y108(2,T) =	29.600	% (VOLUME)
21:15 HRS	90.00 HRS (ET)	H2S CONC OUTLET GAS	(GS-108) / Y108(2,T) =	28.100	% (VOLUME)
3: 2 HRS	95.80 HRS (ET)	H2S CONC OUTLET GAS	(GS-108) / Y108(2,T) =	28.600	% (VOLUME)
	A V E R A G E :	H2S CONC OUTLET GAS	(GS-108) / AY108B =	28.767	% (VOLUME)
14:38 HRS	83.40 HRS (ET)	H2O CONC OUTLET GAS	(GS-108) / Y108(4,T) =	19.500	% (VOLUME)
21:45 HRS	90.50 HRS (ET)	H2O CONC OUTLET GAS	(GS-108) / Y108(4,T) =	19.300	% (VOLUME)
3: 2 HRS	95.80 HRS (ET)	H2O CONC OUTLET GAS	(GS-108) / Y108(4,T) =	17.800	% (VOLUME)
	A V E R A G E :	H2O CONC OUTLET GAS	(GS-108) / AY108D =	18.867	% (VOLUME)
12:15 HRS	81.00 HRS (ET)	N2 INLET VOL FLOW RATE	(G-100) / G100(5,T) =	121.000	CFH (70 DEG F)
3:15 HRS	96.00 HRS (ET)	N2 INLET VOL FLOW RATE	(G-100) / G100(5,T) =	121.000	CFH (70 DEG F)
	A V E R A G E :	N2 INLET VOL FLOW RATE	(G-100) / AG100E =	121.000	CFH (70 DEG F)
12:15 HRS	81.00 HRS (ET)	WEIGHT CYCLONE DUST	(D-101) / CD101(T) =	0.0	LB DUST
4:15 HRS	97.00 HRS (ET)	WEIGHT CYCLONE DUST	(D-101) / CD101(T) =	0.0	LB DUST
	T O T A L :	WEIGHT CYCLONE DUST	(D-101) / WD101 =	0.0	LB DUST
	R A T E :	WEIGHT CYCLONE DUST	(D-101) / RD101 =	0.0	LB DUST/HR
12:15 HRS	81.00 HRS (ET)	WEIGHT FILTER DUST	(D-102) / CD102(T) =	0.0	LB DUST
4:15 HRS	97.00 HRS (ET)	WEIGHT FILTER DUST	(D-102) / CD102(T) =	0.0	LB DUST
	T O T A L :	WEIGHT FILTER DUST	(D-102) / WD102 =	0.0	LB DUST
	R A T E :	WEIGHT FILTER DUST	(D-102) / RD102 =	0.0	LB DUST/HR
13:15 HRS	82.00 HRS (ET)	% TOT S ON CYCLONE DUST	(D-101) / D101(1,T) =	4.000	% (WEIGHT)
17:15 HRS	86.00 HRS (ET)	% TOT S ON CYCLONE DUST	(D-101) / D101(1,T) =	3.920	% (WEIGHT)
21:15 HRS	90.00 HRS (ET)	% TOT S ON CYCLONE DUST	(D-101) / D101(1,T) =	4.200	% (WEIGHT)
1:15 HRS	94.00 HRS (ET)	% TOT S ON CYCLONE DUST	(D-101) / D101(1,T) =	4.080	% (WEIGHT)
	A V E R A G E :	% TOT S ON CYCLONE DUST	(D-101) / AD101A =	4.050	% (WEIGHT)
12:15 HRS	81.00 HRS (ET)	% TOT S ON FILTER DUST	(D-102) / D102(1,T) =	0.0	% (WEIGHT)
3:15 HRS	96.00 HRS (ET)	% TOT S ON FILTER DUST	(D-102) / D102(1,T) =	0.0	% (WEIGHT)
	A V E R A G E :	% TOT S ON FILTER DUST	(D-102) / AD102A =	0.0	% (WEIGHT)

C A R B O N I N V E N T O R Y H O P P E R

13:15 HRS	82.00 HRS (ET)	% RESIDUAL S ON CARBON	(CS- 90) /	Z90(1,T) =	4.000 % (WEIGHT)
17:15 HRS	86.00 HRS (ET)	% RESIDUAL S ON CARBON	(CS- 90) /	Z90(1,T) =	3.920 % (WEIGHT)
21:15 HRS	90.00 HRS (ET)	% RESIDUAL S ON CARBON	(CS- 90) /	Z90(1,T) =	4.200 % (WEIGHT)
1:15 HRS	94.00 HRS (ET)	% RESIDUAL S ON CARBON	(CS- 90) /	Z90(1,T) =	4.080 % (WEIGHT)
	A V E R A G E :	% RESIDUAL S ON CARBON	(CS- 90) /	AZ90A =	4.050 % (WEIGHT)
13:15 HRS	82.00 HRS (ET)	% RESIDUAL H2O ON CARBON	(CS- 90) /	Z90(2,T) =	2.230 % (WEIGHT)
17:15 HRS	86.00 HRS (ET)	% RESIDUAL H2O ON CARBON	(CS- 90) /	Z90(2,T) =	2.230 % (WEIGHT)
21:15 HRS	90.00 HRS (ET)	% RESIDUAL H2O ON CARBON	(CS- 90) /	Z90(2,T) =	2.230 % (WEIGHT)
1:15 HRS	94.00 HRS (ET)	% RESIDUAL H2O ON CARBON	(CS- 90) /	Z90(2,T) =	2.230 % (WEIGHT)
	A V E R A G E :	% RESIDUAL H2O ON CARBON	(CS- 90) /	AZ90B =	2.230 % (WEIGHT)
12:15 HRS	81.00 HRS (ET)	CARBON RECYCLE RATE	(C- 90) /	C90(1,T) =	31.000 LB MAT'L/HR
3:15 HRS	96.00 HRS (ET)	CARBON RECYCLE RATE	(C- 90) /	C90(1,T) =	31.000 LB MAT'L/HR
	A V E R A G E :	CARBON RECYCLE RATE	(C- 90) /	AC90A =	31.000 LB MAT'L/HR

S U L F U R C O N D E N S E R

11:15 HRS	80.00 HRS (ET)	WEIGHT SULFUR COLLECTED	(S-401) /	S401(T) =	0.0 LB SULFUR
13:38 HRS	82.40 HRS (ET)	WEIGHT SULFUR COLLECTED	(S-401) /	S401(T) =	4.200 LB SULFUR
18:15 HRS	87.00 HRS (ET)	WEIGHT SULFUR COLLECTED	(S-401) /	S401(T) =	8.000 LB SULFUR
	T O T A L :	WEIGHT SULFUR COLLECTED	(S-401) /	WS401 =	12.200 LB SULFUR
	R A T E :	WEIGHT SULFUR COLLECTED	(S-401) /	RS401 =	1.743 LB SULFUR/HR

STATUS REPORT OF OPERATING CONDITIONS FOR INTEGRATED OPERATION OF SO2 RECOVERY PROCESS

OPERATING PERIOD:

DATE: 4/23/74 TIME OF RECORD: 12:15 HRS TO 24: 0 HRS
DATE: 4/24/74 TIME OF RECORD: 0: 0 HRS TO 3:15 HRS

PROCESS ELAPSED TIME OF PERIOD: START 81.00 HRS / END 96.00 HRS LENGTH OF PERIOD: 15.00 HRS

SUMMARY OF INTEGRATED PROCESS PERFORMANCE:

1.	SO2 REMOVAL	PRSO2 =	93.87 % (ACTUAL)	90.0 % (GOAL)
2.	H2S UTILIZATION	PUH2S =	100.00 % (ACTUAL)	95.0 % (GOAL)
3.	ACID CONVERSION (TO SULFUR)	PVOS =	69.73 % (ACTUAL)	99.0 % (GOAL)
4.	H2 UTILIZATION (TO H2S)	PHOHS =	70.46 % (ACTUAL)	90.0 % (GOAL)
5.	SULFUR RECOVERY	PRS =	80.91 % (ACTUAL) 27.22 % (ACTUAL)	100.0 % (GOAL) OF SORBED SO2 25.0 % (GOAL) OF STRIPPED SULFUR
6.	H2 UTILIZATION 4" UNIT	PUH2 =	100.00 %	
7.	RESIDUAL SULFUR ON CARBON	X90A =	0.0432 LB S/LB C	
8.	CARBON RECYCLE RATE (DB)	RC90 =	29.053 LB C(DB)/HR	
9.	ACID LOADING INLET CARBON 6" UNIT	X301C =	0.2309 LB ACID/LB C	
10.	MOISTURE CONTENT INLET CARBON 6" UNIT	X301B =	0.1043 LB H2O/LB C	
11.	ACID LOADING INLET CARBON 8" UNIT	X302C =	0.2309 LB ACID/LB C	
12.	MOISTURE CONTENT INLET CARBON 8" UNIT	X302B =	0.1043 LB H2O/LB C	
13.	TOTAL ACID CONVERTED 8" UNIT	PVC =	36.88 %	
14.	SULFUR CONVERSION (TO H2S)	PSOHS =	36.66 %	
15.	SULFUR CONDENSER EFFICIENCY	ERV400=	203.97 %	

MAJOR EVENTS DURING OPERATING PERIOD:

GAS CHROMATOGRAPH H2 SLIGHTLY OFF
INITIATED PROCEDURE TO TAKE SO2 OUTLET
SAMPLE FROM 18" UNIT UNDER POSITIVE PRESSURE

STATUS REPORT OF OPERATING CONDITIONS FOR INTEGRATED OPERATION OF SO2 RECOVERY PROCESS

OPERATING PERIOD:

DATE: 4/23/74 TIME OF RECORD: 12:15 HRS TO 24: 0 HRS
DATE: 4/24/74 TIME OF RECORD: 0: 0 HRS TO 3:15 HRS

PROCESS ELAPSED TIME OF PERIOD: START 8.00 HRS / END 96.00 HRS LENGTH OF PERIOD: 15.00 HRS

SULFUR MATERIAL BALANCE (USING PROCESS H2S):

S O 2 S O R B E R

I N

INLET GAS AS SO2	(G- 13) /	BG10A =	2.2949 LB SULFUR/HR
INLET C AS RESIDUAL S	(C- 11) /	BC11A =	1.2555 LB SULFUR/HR
T O T A L I N :	(RV- 10) /	SI10 =	3.5504 LB SULFUR/HR

O U T

OUTLET GAS AS SO2	(G- 13) /	BG13A =	0.1407 LB SULFUR/HR
OUTLET CARBON	(C- 12) /	BC12A =	3.4462 LB SULFUR/HR
CYCLONE DUST	(D- 11) /	BD11A =	0.0121 LB SULFUR/HR
COLLECTOR DUST	(D- 12) /	BD12A =	0.0 LB SULFUR/HR
CARBON WEEPAGE	(CW- 12) /	BCW12A =	0.0009 LB SULFUR/HR
T O T A L O U T :	(RV- 10) /	SO10 =	3.5999 LB SULFUR/HR

6" D I A C A R B O N P R E C O N D I T I O N E R

I N

INLET CARBON	(C- 12) /	BC12A =	3.4462 LB SULFUR/HR
T O T A L I N :	(RV-300) /	SI300 =	3.4462 LB SULFUR/HR

O U T

OUTLET CARBON	(C-301) /	BC301A =	3.4462 LB SULFUR/HR
CYCLONE DUST	(D-301) /	BD301A =	0.0 LB SULFUR/HR
T O T A L O U T :	(RV-300) /	SO300 =	3.4462 LB SULFUR/HR

S U L F U R G E N E R A T O R

I N

INLET GAS AS H2S (CYL)	(G-201) /	BG201B =	0.0 LB SULFUR/HR
INLET GAS AS H2S (PROC)	(G-201) /	BG203R =	5.5491 LB SULFUR/HR
INLET CARBON	(C-201) /	BC201A =	3.4462 LB SULFUR/HR
T O T A L I N :	(RV-200) /	SI200 =	8.9953 LB SULFUR/HR

O U T

OUTLET GAS AS H2S	(G-205) /	BG205B =	0.0 LB SULFUR/HR
OUTLET GAS AS SO2	(G-205) /	BG205A =	0.3238 LB SULFUR/HR
OUTLET CARBON	(C-202) /	BC202A =	7.6591 LB SULFUR/HR
T O T A L O U T :	(RV-200) /	SO200 =	7.9829 LB SULFUR/HR

H2S GENERATOR/SULFUR STRIPPER

IN				
	INLET CARBON	(C-2(2) / BC202A =	7.6591	LB SULFUR/HR
	TOTAL IN :	(RV-1(C) / SI100 =	7.6591	LB SULFUR/HR
CUT				
	OUTLET CARBON	(C-1(3) / BC103A =	1.2555	LB SULFUR/HR
	OUTLET GAS AS H2S	(G-1(4) / BG104B =	5.5491	LB SULFUR/HR
	OUTLET GAS AS S	(G-1(4) / BG104S =	1.7429	LB SULFUR/HR
	CYCLONE DUST	(D-1(1) / BD101A =	0.0	LB SULFUR/HR
	FILTER DUST	(D-1(2) / BD102A =	0.0	LB SULFUR/HR
	TOTAL OUT :	(RV-1(C) / SO100 =	8.5475	LB SULFUR/HR

OVERALL SULFUR BALANCE

IN				
	INLET GAS 18" UNIT AS SO2	(G- 1(C) / BG10A =	2.2949	LB SULFUR/HR
	INLET GAS 8" UNIT AS CYL H2S	(G-2(1) / BG201B =	0.0	LB SULFUR/HR
	TOTAL SULFUR IN :		2.2949	LB SULFUR/HR
CUT				
	OUTLET GAS 18" UNIT AS SO2	(G- 13) / BG13A =	0.1407	LB SULFUR/HR
	CYCLONE DUST 18" UNIT	(D- 11) / BD11A =	0.0121	LB SULFUR/HR
	COLLECTOR DUST 18" UNIT	(D- 12) / BD12A =	0.0	LB SULFUR/HR
	CARBON WEEPAGE 18" UNIT	(CW- 12) / BCW12A =	0.0009	LB SULFUR/HR
	CYCLONE DUST 6" UNIT	(D-3(1) / BD301A =	0.0	LB SULFUR/HR
	OUTLET GAS 8" UNIT AS H2S	(G-2(5) / BG205B =	0.0	LB SULFUR/HR
	OUTLET GAS 8" UNIT AS SO2	(G-2(5) / BG205A =	0.3238	LB SULFUR/HR
	OUTLET GAS 4" UNIT AS H2S	(G-1(4) / BG104B =	0.0	LB SULFUR/HR
	OUTLET GAS 4" UNIT AS S	(G-1(4) / BG104S =	1.7429	LB SULFUR/HR
	CYCLONE DUST 4" UNIT	(D-1(1) / BD101A =	0.0	LB SULFUR/HR
	FILTER DUST 4" UNIT	(D-1(2) / BD102A =	0.0	LB SULFUR/HR
	TOTAL SULFUR OUT :		2.2204	LB SULFUR/HR

HYDROGEN MATERIAL BALANCE:

SULFUR GENERATOR

IN				
	INLET GAS AS H2	(G-2(3) / BG203C =	0.0	LB HYDROGEN/HR
	INLET GAS AS H2S (CYL)	(G-2(3) / BG203B =	0.0	LB HYDROGEN/HR
	INLET GAS AS H2S (PROC)	(G-2(3) / BG203 =	0.3467	LB HYDROGEN/HR
	INLET GAS AS H2O	(G-2(3) / BG203D =	0.2423	LB HYDROGEN/HR
	INLET CARBON	(C-2(1) / BC201H =	0.4736	LB HYDROGEN/HR
	TOTAL IN:	(RV-2(0) / HI200 =	1.0627	LB HYDROGEN/HR
OUT				
	OUTLET GAS AS H2	(G-2(5) / BG205C =	0.0	LB HYDROGEN/HR
	OUTLET GAS AS H2S	(G-2(5) / BG205B =	0.0	LB HYDROGEN/HR
	OUTLET GAS AS H2O	(G-2(5) / BG205D =	0.6969	LB HYDROGEN/HR
	OUTLET CARBON	(C-2(2) / BC202H =	0.1440	LB HYDROGEN/HR
	TOTAL OUT:	(RV-2(0) / HO200 =	0.8409	LB HYDROGEN/HR

H2S GENERATOR/SULFUR STRIPPER

IN				
	INLET GAS AS H2	(G-1(3) / BG103C =	0.4921	LB HYDROGEN/HR
	INLET CARBON	(C-2(2) / BC202H =	0.1440	LB HYDROGEN/HR
	TOTAL IN:	(RV-1(0) / HI100 =	0.6361	LB HYDROGEN/HR
OUT				
	OUTLET GAS AS H2	(G-1(4) / BG104C =	0.0	LB HYDROGEN/HR
	OUTLET GAS AS H2S	(G-1(4) / BG104B =	0.3467	LB HYDROGEN/HR
	OUTLET GAS AS H2O	(G-1(4) / BG104D =	0.2274	LB HYDROGEN/HR
	TOTAL OUT:	(RV-1(0) / HO100 =	0.5741	LB HYDROGEN/HR

APPENDIX A-12-7

EXPERIMENTAL DATA AND RESULTS FOR INTEGRAL RUN IR-2-7 (96 - 111 hours)

STATUS REPORT OF OPERATING CONDITIONS FOR INTEGRATED OPERATION OF SO2 RECOVERY PROCESS

OPERATING PERIOD:

DATE: 4/24/74 TIME OF RECORD: 3:15 HRS TO 18:15 HRS

PROCESS ELAPSED TIME OF PERIOD: START 96.00 HRS / END 111.00 HRS LENGTH OF PERIOD: 15.00 HRS

PROCESS VARIABLES FOR OPERATING PERIOD:

S O 2 S C R B E R

6:15 HRS	99.00 HRS (ET)	SO2 CONC INLET FLUE GAS	(GS- 10) / Y10(1,T)	=	2075.000	PPM	(VOLUME)
11:32 HRS	104.30 HRS (ET)	SO2 CONC INLET FLUE GAS	(GS- 10) / Y10(1,T)	=	1900.000	PPM	(VOLUME)
14: 2 HRS	106.80 HRS (ET)	SO2 CONC INLET FLUE GAS	(GS- 10) / Y10(1,T)	=	2075.000	PPM	(VOLUME)
19: 2 HRS	111.80 HRS (ET)	SO2 CONC INLET FLUE GAS	(GS- 10) / Y10(1,T)	=	2000.000	PPM	(VOLUME)
A V E R A G E :		SO2 CONC INLET FLUE GAS	(GS- 10) / AY10A	=	2012.500	PPM	(VOLUME)
6:15 HRS	99.00 HRS (ET)	SO2 CONC OUTLET FLUE GAS	(GS- 16) / Y16(1,T)	=	120.000	PPM	(VOLUME)
12: 2 HRS	104.80 HRS (ET)	SO2 CONC OUTLET FLUE GAS	(GS- 16) / Y16(1,T)	=	42.500	PPM	(VOLUME)
14:15 HRS	107.00 HRS (ET)	SO2 CONC OUTLET FLUE GAS	(GS- 16) / Y16(1,T)	=	55.000	PPM	(VOLUME)
19: 2 HRS	111.30 HRS (ET)	SO2 CONC OUTLET FLUE GAS	(GS- 16) / Y16(1,T)	=	50.000	PPM	(VOLUME)
A V E R A G E :		SO2 CONC OUTLET FLUE GAS	(GS- 16) / AY16A	=	66.875	PPM	(VOLUME)
3:15 HRS	96.00 HRS (ET)	H2O CONC INLET FLUE GAS	(GS- 10) / Y10(4,T)	=	10.000	%	(VOLUME)
18:15 HRS	111.00 HRS (ET)	H2O CONC INLET FLUE GAS	(GS- 10) / Y10(4,T)	=	10.000	%	(VOLUME)
A V E R A G E :		H2O CONC INLET FLUE GAS	(GS- 10) / AY10D	=	10.000	%	(VOLUME)
2:15 HRS	95.00 HRS (ET)	ORIFICE PRESSURE DROP	(DP- 10) / DP10(T)	=	2.200	INCHES	H2O
10:15 HRS	103.00 HRS (ET)	ORIFICE PRESSURE DROP	(DP- 10) / DP10(T)	=	2.300	INCHES	H2O
12:15 HRS	111.00 HRS (ET)	ORIFICE PRESSURE DROP	(DP- 10) / DP10(T)	=	2.300	INCHES	H2O
A V E R A G E :		ORIFICE PRESSURE DROP	(DP- 10) / ADP10	=	2.267	INCHES	H2O
4:15 HRS	97.00 HRS (ET)	ORIFICE TEMPERATURE	(TL- 10) / TL10(T)	=	319.000	DEG	F
6:15 HRS	99.00 HRS (ET)	ORIFICE TEMPERATURE	(TL- 10) / TL10(T)	=	315.000	DEG	F
9:20 HRS	102.10 HRS (ET)	ORIFICE TEMPERATURE	(TL- 10) / TL10(T)	=	303.000	DEG	F
11:15 HRS	104.00 HRS (ET)	ORIFICE TEMPERATURE	(TL- 10) / TL10(T)	=	294.000	DEG	F
14:20 HRS	107.10 HRS (ET)	ORIFICE TEMPERATURE	(TL- 10) / TL10(T)	=	293.000	DEG	F
A V E R A G E :		ORIFICE TEMPERATURE	(TL- 10) / ATL10	=	304.800	DEG	F
4:15 HRS	97.00 HRS (ET)	WEIGHT CYCLONE DUST	(D- 11) / CD11(T)	=	0.0	LB	DUST
12:15 HRS	105.00 HRS (ET)	WEIGHT CYCLONE DUST	(D- 11) / CD11(T)	=	1.500	LB	DUST
20:15 HRS	113.00 HRS (ET)	WEIGHT CYCLONE DUST	(D- 11) / CD11(T)	=	1.500	LB	DUST
T O T A L :		WEIGHT CYCLONE DUST	(D- 11) / WD11	=	3.000	LB	DUST
R A T E :		WEIGHT CYCLONE DUST	(D- 11) / RD11	=	0.188	LB	DUST/HR
4:15 HRS	97.00 HRS (ET)	WEIGHT COLLECTOR DUST	(D- 12) / CD12(T)	=	0.0	LB	DUST
20:15 HRS	113.00 HRS (ET)	WEIGHT COLLECTOR DUST	(D- 12) / CD12(T)	=	0.0	LB	DUST
T O T A L :		WEIGHT COLLECTOR DUST	(D- 12) / WD12	=	0.0	LB	DUST
R A T E :		WEIGHT COLLECTOR DUST	(D- 12) / RD12	=	0.0	LB	DUST/HR
4:15 HRS	97.00 HRS (ET)	WEIGHT CARBON WEEPAGE	(CW- 12) / CW12(T)	=	0.0	LB	DUST
12:15 HRS	105.00 HRS (ET)	WEIGHT CARBON WEEPAGE	(CW- 12) / CW12(T)	=	0.033	LB	DUST
20:15 HRS	113.00 HRS (ET)	WEIGHT CARBON WEEPAGE	(CW- 12) / CW12(T)	=	0.045	LB	DUST
T O T A L :		WEIGHT CARBON WEEPAGE	(CW- 12) / WCW12	=	0.078	LB	DUST

```
                    R A T E :    WEIGHT CARBON WEEPAGE          (CW- 12) /    RCW12  =      0.005 LB DUST/HR

 4:15 HRS    97.00 HRS (ET)      % TOT S ON CYCLONE DUST        ( D- 11) / D11(1,T)  =      7.300 % (WEIGHT)
12:15 HRS   105.00 HRS (ET)      % TOT S ON CYCLONE DUST        ( D- 11) / D11(1,T)  =      7.220 % (WEIGHT)
20:15 HRS   113.00 HRS (ET)      % TOT S ON CYCLONE DUST        ( D- 11) / D11(1,T)  =      7.160 % (WEIGHT)
            A V E R A G E :      % TOT S ON CYCLONE DUST        ( D- 11) /    AD11A  =      7.227 % (WEIGHT)

 4:15 HRS    97.00 HRS (ET)      % TOT S ON COLLECTOR DUST      ( D- 12) / D12(1,T)  =      7.300 % (WEIGHT)
12:15 HRS   105.00 HRS (ET)      % TOT S ON COLLECTOR DUST      ( D- 12) / D12(1,T)  =      7.220 % (WEIGHT)
20:15 HRS   113.00 HRS (ET)      % TOT S ON COLLECTOR DUST      ( D- 12) / D12(1,T)  =      7.160 % (WEIGHT)
            A V E R A G E :      % TOT S ON COLLECTOR DUST      ( D- 12) /    AD12A  =      7.227 % (WEIGHT)
```

6" DIA CARBON PRECONDITIONER

5:15 HRS	98.00 HRS (ET)	% TOT S ON INLET CARBON	(CS-301) / Z301(1,T) =	8.560	% (WEIGHT)
9:15 HRS	102.00 HRS (ET)	% TOT S ON INLET CARBON	(CS-301) / Z301(1,T) =	8.140	% (WEIGHT)
13:15 HRS	106.00 HRS (ET)	% TOT S ON INLET CARBON	(CS-301) / Z301(1,T) =	8.060	% (WEIGHT)
17:15 HRS	110.00 HRS (ET)	% TOT S ON INLET CARBON	(CS-301) / Z301(1,T) =	8.540	% (WEIGHT)
	AVERAGE :	% TOT S ON INLET CARBON	(CS-301) / AZ301A =	8.325	% (WEIGHT)
5:15 HRS	98.00 HRS (ET)	% H2O ON INLET CARBON	(CS-301) / Z301(2,T) =	6.100	% (WEIGHT)
9:15 HRS	102.00 HRS (ET)	% H2O ON INLET CARBON	(CS-301) / Z301(2,T) =	6.200	% (WEIGHT)
13:15 HRS	106.00 HRS (ET)	% H2O ON INLET CARBON	(CS-301) / Z301(2,T) =	6.300	% (WEIGHT)
17:15 HRS	110.00 HRS (ET)	% H2O ON INLET CARBON	(CS-301) / Z301(2,T) =	6.400	% (WEIGHT)
	AVERAGE :	% H2O ON INLET CARBON	(CS-301) / AZ301B =	6.250	% (WEIGHT)
4:15 HRS	97.00 HRS (ET)	WEIGHT CYCLONE DUST	(D-301) / CD301(T) =	0.0	LB DUST
20:15 HRS	113.00 HRS (ET)	WEIGHT CYCLONE DUST	(D-301) / CD301(T) =	0.0	LB DUST
	TOTAL :	WEIGHT CYCLONE DUST	(D-301) / WD301 =	0.0	LB DUST
	RATE :	WEIGHT CYCLONE DUST	(D-301) / RD301 =	0.0	LB DUST/HR
3:15 HRS	96.00 HRS (ET)	% TOT S ON CYCLONE DUST	(D-301) / D301(1,T) =	0.0	% (WEIGHT)
18:15 HRS	111.00 HRS (ET)	% TOT S ON CYCLONE DUST	(D-301) / D301(1,T) =	0.0	% (WEIGHT)
	AVERAGE :	% TOT S ON CYCLONE DUST	(D-301) / AD301A =	0.0	% (WEIGHT)

S U L F U R G E N E R A T O R

0:15 HRS	93.00 HRS (ET)	SO2 CONC OUTLET GAS	(GS-206) / Y206(1,T) =	1.530	% (VOLUME)
6:15 HRS	99.00 HRS (ET)	SO2 CONC OUTLET GAS	(GS-206) / Y206(1,T) =	1.470	% (VOLUME)
17:38 HRS	110.40 HRS (ET)	SO2 CONC OUTLET GAS	(GS-206) / Y206(1,T) =	1.400	% (VOLUME)
	A V E R A G E :	SO2 CONC OUTLET GAS	(GS-206) / AY206A =	1.467	% (VOLUME)
22:50 HRS	91.60 HRS (ET)	H2S CONC INLET GAS	(GS-200) / Y200(2,T) =	26.000	% (VOLUME)
4:26 HRS	97.20 HRS (ET)	H2S CONC INLET GAS	(GS-200) / Y200(2,T) =	26.600	% (VOLUME)
19:26 HRS	112.20 HRS (ET)	H2S CONC INLET GAS	(GS-200) / Y200(2,T) =	25.000	% (VOLUME)
	A V E R A G E :	H2S CONC INLET GAS	(GS-200) / AY200B =	25.933	% (VOLUME)
0:15 HRS	93.00 HRS (ET)	H2S CONC OUTLET GAS	(GS-206) / Y206(2,T) =	0.0	% (VOLUME)
6:15 HRS	99.00 HRS (ET)	H2S CONC OUTLET GAS	(GS-206) / Y206(2,T) =	0.0	% (VOLUME)
17:38 HRS	110.40 HRS (ET)	H2S CONC OUTLET GAS	(GS-206) / Y206(2,T) =	0.0	% (VOLUME)
	A V E R A G E :	H2S CONC OUTLET GAS	(GS-206) / AY206B =	0.0	% (VOLUME)
22:50 HRS	91.60 HRS (ET)	H2 CONC INLET GAS	(GS-200) / Y200(3,T) =	0.0	% (VOLUME)
4:26 HRS	97.20 HRS (ET)	H2 CONC INLET GAS	(GS-200) / Y200(3,T) =	0.0	% (VOLUME)
19:26 HRS	112.20 HRS (ET)	H2 CONC INLET GAS	(GS-200) / Y200(3,T) =	0.0	% (VOLUME)
	A V E R A G E :	H2 CONC INLET GAS	(GS-200) / AY200C =	0.0	% (VOLUME)
0:15 HRS	93.00 HRS (ET)	H2 CONC OUTLET GAS	(GS-206) / Y206(3,T) =	0.0	% (VOLUME)
6:15 HRS	99.00 HRS (ET)	H2 CONC OUTLET GAS	(GS-206) / Y206(3,T) =	0.0	% (VOLUME)
17:38 HRS	110.40 HRS (ET)	H2 CONC OUTLET GAS	(GS-206) / Y206(3,T) =	0.0	% (VOLUME)
	A V E R A G E :	H2 CONC OUTLET GAS	(GS-206) / AY206C =	0.0	% (VOLUME)
22:50 HRS	91.60 HRS (ET)	H2O CONC INLET GAS	(GS-200) / Y200(4,T) =	19.800	% (VOLUME)
4:26 HRS	97.20 HRS (ET)	H2O CONC INLET GAS	(GS-200) / Y200(4,T) =	20.000	% (VOLUME)
19:26 HRS	112.20 HRS (ET)	H2O CONC INLET GAS	(GS-200) / Y200(4,T) =	22.300	% (VOLUME)
	A V E R A G E :	H2O CONC INLET GAS	(GS-200) / AY200D =	20.700	% (VOLUME)
0:15 HRS	93.00 HRS (ET)	H2O CONC OUTLET GAS	(GS-206) / Y206(4,T) =	51.300	% (VOLUME)
6:15 HRS	99.00 HRS (ET)	H2O CONC OUTLET GAS	(GS-206) / Y206(4,T) =	50.500	% (VOLUME)
17:38 HRS	110.40 HRS (ET)	H2O CONC OUTLET GAS	(GS-206) / Y206(4,T) =	52.600	% (VOLUME)
	A V E R A G E :	H2O CONC OUTLET GAS	(GS-206) / AY206D =	51.467	% (VOLUME)
22:50 HRS	91.60 HRS (ET)	N2 CONC INLET GAS	(GS-200) / Y200(5,T) =	53.900	% (VOLUME)
4:26 HRS	97.20 HRS (ET)	N2 CONC INLET GAS	(GS-200) / Y200(5,T) =	52.800	% (VOLUME)
19:26 HRS	112.20 HRS (ET)	N2 CONC INLET GAS	(GS-200) / Y200(5,T) =	52.100	% (VOLUME)
	A V E R A G E :	N2 CONC INLET GAS	(GS-200) / AY200E =	52.933	% (VOLUME)
0:15 HRS	93.00 HRS (ET)	N2 CONC OUTLET GAS	(GS-206) / Y206(5,T) =	46.700	% (VOLUME)
6:15 HRS	99.00 HRS (ET)	N2 CONC OUTLET GAS	(GS-206) / Y206(5,T) =	47.700	% (VOLUME)
17:38 HRS	110.40 HRS (ET)	N2 CONC OUTLET GAS	(GS-206) / Y206(5,T) =	45.700	% (VOLUME)
	A V E R A G E :	N2 CONC OUTLET GAS	(GS-206) / AY206E =	46.700	% (VOLUME)
3:15 HRS	96.00 HRS (ET)	N2 INLET VOL FLOW RATE	(G-200) / G200(5,T) =	121.000	CFH (70 DEG F)
18:15 HRS	111.00 HRS (ET)	N2 INLET VOL FLOW RATE	(G-200) / G200(5,T) =	121.000	CFH (70 DEG F)
	A V E R A G E :	N2 INLET VOL FLOW RATE	(G-200) / AG200E =	121.000	CFH (70 DEG F)
5:15 HRS	98.00 HRS (ET)	% TOT S ON INLET CARBON	(GS-302) / Z302(1,T) =	8.560	% (WEIGHT)
9:15 HRS	102.00 HRS (ET)	% TOT S ON INLET CARBON	(GS-302) / Z302(1,T) =	8.140	% (WEIGHT)
13:15 HRS	106.00 HRS (ET)	% TOT S ON INLET CARBON	(GS-302) / Z302(1,T) =	8.060	% (WEIGHT)
17:15 HRS	110.00 HRS (ET)	% TOT S ON INLET CARBON	(GS-302) / Z302(1,T) =	8.540	% (WEIGHT)
	A V E R A G E :	% TOT S ON INLET CARBON	(GS-302) / AZ302A =	8.325	% (WEIGHT)
5:15 HRS	98.00 HRS (ET)	% TOT S ON OUTLET CARBON	(GS-200) / Z200(1,T) =	20.500	% (WEIGHT)
9:15 HRS	102.00 HRS (ET)	% TOT S ON OUTLET CARBON	(GS-200) / Z200(1,T) =	20.100	% (WEIGHT)

13:15 HRS	106.00 HRS (ET)	% TOT S ON OUTLET CARBON	(CS-200) / Z200(1,T) =	20.000	% (WEIGHT)
17:15 HRS	110.00 HRS (ET)	% TOT S ON OUTLET CARBON	(CS-200) / Z200(1,T) =	19.360	% (WEIGHT)
	A V E R A G E :	% TOT S ON OUTLET CARBON	(CS-200) / AZ200A =	19.990	% (WEIGHT)
5:15 HRS	98.00 HRS (ET)	% H2O ON INLET CARBON	(CS-302) / Z302(2,T) =	6.100	% (WEIGHT)
9:15 HRS	102.00 HRS (ET)	% H2O ON INLET CARBON	(CS-302) / Z302(2,T) =	6.200	% (WEIGHT)
13:15 HRS	106.00 HRS (ET)	% H2O ON INLET CARBON	(CS-302) / Z302(2,T) =	6.300	% (WEIGHT)
17:15 HRS	110.00 HRS (ET)	% H2O ON INLET CARBON	(CS-302) / Z302(2,T) =	6.400	% (WEIGHT)
	A V E R A G E :	% H2O ON INLET CARBON	(CS-302) / AZ302B =	6.250	% (WEIGHT)
5:15 HRS	98.00 HRS (ET)	% H2O ON OUTLET CARBON	(CS-200) / Z200(2,T) =	2.300	% (WEIGHT)
9:15 HRS	102.00 HRS (ET)	% H2O ON OUTLET CARBON	(CS-200) / Z200(2,T) =	2.300	% (WEIGHT)
13:15 HRS	106.00 HRS (ET)	% H2O ON OUTLET CARBON	(CS-200) / Z200(2,T) =	2.600	% (WEIGHT)
17:15 HRS	110.00 HRS (ET)	% H2O ON OUTLET CARBON	(CS-200) / Z200(2,T) =	2.600	% (WEIGHT)
	A V E R A G E :	% H2O ON OUTLET CARBON	(CS-200) / AZ200B =	2.450	% (WEIGHT)
5:15 HRS	98.00 HRS (ET)	% ACID ON OUTLET CARBON	(CS-200) / Z200(3,T) =	2.700	% (WEIGHT)
9:15 HRS	102.00 HRS (ET)	% ACID ON OUTLET CARBON	(CS-200) / Z200(3,T) =	2.300	% (WEIGHT)
13:15 HRS	106.00 HRS (ET)	% ACID ON OUTLET CARBON	(CS-200) / Z200(3,T) =	2.210	% (WEIGHT)
17:15 HRS	110.00 HRS (ET)	% ACID ON OUTLET CARBON	(CS-200) / Z200(3,T) =	2.740	% (WEIGHT)
	A V E R A G E :	% ACID ON OUTLET CARBON	(CS-200) / AZ200C =	2.487	% (WEIGHT)

H2S GENERATOR/SULFUR STRIPPER

19:15 HRS	88.00 HRS (ET)	H2 CONC INLET GAS	(GS-100) / Y100(3,T) =	51.200	%	(VOLUME)
1: 2 HRS	93.80 HRS (ET)	H2 CONC INLET GAS	(GS-100) / Y100(3,T) =	50.600	%	(VOLUME)
21:15 HRS	114.00 HRS (ET)	H2 CONC INLET GAS	(GS-100) / Y100(3,T) =	51.000	%	(VOLUME)
	A V E R A G E :	H2 CONC INLET GAS	(GS-100) / AY100C =	50.933	%	(VOLUME)
21:15 HRS	90.00 HRS (ET)	H2 CONC OUTLET GAS	(GS-108) / Y108(3,T) =	0.0	%	(VOLUME)
3: 2 HRS	95.80 HRS (ET)	H2 CONC OUTLET GAS	(GS-108) / Y108(3,T) =	0.0	%	(VOLUME)
8: 2 HRS	100.80 HRS (ET)	H2 CONC OUTLET GAS	(GS-108) / Y108(3,T) =	0.0	%	(VOLUME)
23: 2 HRS	115.80 HRS (ET)	H2 CONC OUTLET GAS	(GS-108) / Y108(3,T) =	0.0	%	(VOLUME)
	A V E R A G E :	H2 CONC OUTLET GAS	(GS-108) / AY108C =	0.0	%	(VOLUME)
19:15 HRS	88.00 HRS (ET)	N2 CONC INLET GAS	(GS-100) / Y100(5,T) =	48.800	%	(VOLUME)
1: 2 HRS	93.80 HRS (ET)	N2 CONC INLET GAS	(GS-100) / Y100(5,T) =	49.400	%	(VOLUME)
21:15 HRS	114.00 HRS (ET)	N2 CONC INLET GAS	(GS-100) / Y100(5,T) =	49.000	%	(VOLUME)
	A V E R A G E :	N2 CONC INLET GAS	(GS-100) / AY100E =	49.067	%	(VOLUME)
21:15 HRS	90.00 HRS (ET)	N2 CONC OUTLET GAS	(GS-108) / Y108(5,T) =	52.200	%	(VOLUME)
3: 2 HRS	95.80 HRS (ET)	N2 CONC OUTLET GAS	(GS-108) / Y108(5,T) =	53.300	%	(VOLUME)
8: 2 HRS	100.80 HRS (ET)	N2 CONC OUTLET GAS	(GS-108) / Y108(5,T) =	52.200	%	(VOLUME)
23: 2 HRS	115.80 HRS (ET)	N2 CONC OUTLET GAS	(GS-108) / Y108(5,T) =	52.300	%	(VOLUME)
	A V E R A G E :	N2 CONC OUTLET GAS	(GS-108) / AY108E =	52.500	%	(VOLUME)
21:15 HRS	90.00 HRS (ET)	H2S CONC OUTLET GAS	(GS-108) / Y108(2,T) =	28.100	%	(VOLUME)
3: 2 HRS	95.80 HRS (ET)	H2S CONC OUTLET GAS	(GS-108) / Y108(2,T) =	28.600	%	(VOLUME)
8: 2 HRS	100.80 HRS (ET)	H2S CONC OUTLET GAS	(GS-108) / Y108(2,T) =	29.900	%	(VOLUME)
23: 2 HRS	115.80 HRS (ET)	H2S CONC OUTLET GAS	(GS-108) / Y108(2,T) =	27.700	%	(VOLUME)
	A V E R A G E :	H2S CONC OUTLET GAS	(GS-108) / AY108B =	28.575	%	(VOLUME)
21:15 HRS	90.00 HRS (ET)	H2O CONC OUTLET GAS	(GS-108) / Y108(4,T) =	19.300	%	(VOLUME)
3: 2 HRS	95.80 HRS (ET)	H2O CONC OUTLET GAS	(GS-108) / Y108(4,T) =	17.800	%	(VOLUME)
8: 2 HRS	100.80 HRS (ET)	H2O CONC OUTLET GAS	(GS-108) / Y108(4,T) =	17.600	%	(VOLUME)
23: 2 HRS	115.80 HRS (ET)	H2O CONC OUTLET GAS	(GS-108) / Y108(4,T) =	19.700	%	(VOLUME)
	A V E R A G E :	H2O CONC OUTLET GAS	(GS-108) / AY108D =	18.600	%	(VOLUME)
3:15 HRS	96.00 HRS (ET)	N2 INLET VOL FLOW RATE	(G-100) / G100(5,T) =	121.000	CFH	(70 DEG F)
18:15 HRS	111.00 HRS (ET)	N2 INLET VOL FLOW RATE	(G-100) / G100(5,T) =	121.000	CFH	(70 DEG F)
	A V E R A G E :	N2 INLET VOL FLOW RATE	(G-100) / AG100E =	121.000	CFH	(70 DEG F)
4:15 HRS	97.00 HRS (ET)	WEIGHT CYCLONE DUST	(D-101) / CD101(T) =	0.0	LB	DUST
20:15 HRS	113.00 HRS (ET)	WEIGHT CYCLONE DUST	(D-101) / CD101(T) =	0.0	LB	DUST
	T O T A L :	WEIGHT CYCLONE DUST	(D-101) / WD101 =	0.0	LB	DUST
	R A T E :	WEIGHT CYCLONE DUST	(D-101) / RD101 =	0.0	LB	DUST/HR
4:15 HRS	97.00 HRS (ET)	WEIGHT FILTER DUST	(D-102) / CD102(T) =	0.0	LB	DUST
20:15 HRS	113.00 HRS (ET)	WEIGHT FILTER DUST	(D-102) / CD102(T) =	0.0	LB	DUST
	T O T A L :	WEIGHT FILTER DUST	(D-102) / WD102 =	0.0	LB	DUST
	R A T E :	WEIGHT FILTER DUST	(D-102) / RD102 =	0.0	LB	DUST/HR
5:15 HRS	98.00 HRS (ET)	% TOT S ON CYCLONE DUST	(D-101) / D101(1,T) =	3.520	%	(WEIGHT)
9:15 HRS	102.00 HRS (ET)	% TOT S ON CYCLONE DUST	(D-101) / D101(1,T) =	2.480	%	(WEIGHT)
13:15 HRS	106.00 HRS (ET)	% TOT S ON CYCLONE DUST	(D-101) / D101(1,T) =	3.940	%	(WEIGHT)
17:15 HRS	110.00 HRS (ET)	% TOT S ON CYCLONE DUST	(D-101) / D101(1,T) =	3.840	%	(WEIGHT)
	A V E R A G E :	% TOT S ON CYCLONE DUST	(D-101) / AD101A =	3.695	%	(WEIGHT)
3:15 HRS	96.00 HRS (ET)	% TOT S ON FILTER DUST	(D-102) / D102(1,T) =	0.0	%	(WEIGHT)
18:15 HRS	111.00 HRS (ET)	% TOT S ON FILTER DUST	(D-102) / D102(1,T) =	0.0	%	(WEIGHT)
	A V E R A G E :	% TOT S ON FILTER DUST	(D-102) / AD102A =	0.0	%	(WEIGHT)

CARBON INVENTORY HOPPER

5:15 HRS	98.00 HRS (ET)	% RESIDUAL S ON CARBON	(CS- 90) /	Z90(1,T) =	3.520 % (WEIGHT)
9:15 HRS	102.00 HRS (ET)	% RESIDUAL S ON CARBON	(CS- 90) /	Z90(1,T) =	3.480 % (WEIGHT)
13:15 HRS	106.00 HRS (ET)	% RESIDUAL S ON CARBON	(CS- 90) /	Z90(1,T) =	3.940 % (WEIGHT)
17:15 HRS	110.00 HRS (ET)	% RESIDUAL S ON CARBON	(CS- 90) /	Z90(1,T) =	3.840 % (WEIGHT)
	A V E R A G E :	% RESIDUAL S ON CARBON	(CS- 90) /	AZ90A =	3.695 % (WEIGHT)
5:15 HRS	98.00 HRS (ET)	% RESIDUAL H2O ON CARBON	(CS- 90) /	Z90(2,T) =	2.230 % (WEIGHT)
9:15 HRS	102.00 HRS (ET)	% RESIDUAL H2O ON CARBON	(CS- 90) /	Z90(2,T) =	2.230 % (WEIGHT)
13:15 HRS	106.00 HRS (ET)	% RESIDUAL H2O ON CARBON	(CS- 90) /	Z90(2,T) =	2.230 % (WEIGHT)
17:15 HRS	110.00 HRS (ET)	% RESIDUAL H2O ON CARBON	(CS- 90) /	Z90(2,T) =	2.230 % (WEIGHT)
	A V E R A G E :	% RESIDUAL H2O ON CARBON	(CS- 90) /	AZ90B =	2.230 % (WEIGHT)
3:15 HRS	96.00 HRS (ET)	CARBON RECYCLE RATE	(C- 90) /	C90(1,T) =	31.000 LB MAT'L/HR
18:15 HRS	111.00 HRS (ET)	CARBON RECYCLE RATE	(C- 90) /	C90(1,T) =	31.000 LB MAT'L/HR
	A V E R A G E :	CARBON RECYCLE RATE	(C- 90) /	AC90A =	31.000 LB MAT'L/HR

SULFUR CONDENSER

4:15 HRS	97.00 HRS (ET)	WEIGHT SULFUR COLLECTED	(S-401) /	S401(T) =	0.0 LB SULFUR
14:15 HRS	107.00 HRS (ET)	WEIGHT SULFUR COLLECTED	(S-401) /	S401(T) =	17.500 LB SULFUR
	T O T A L :	WEIGHT SULFUR COLLECTED	(S-401) /	WS401 =	17.500 LB SULFUR
	R A T E :	WEIGHT SULFUR COLLECTED	(S-401) /	RS401 =	1.750 LB SULFUR/HR

STATUS REPORT OF OPERATING CONDITIONS FOR INTEGRATED OPERATION OF SO2 RECOVERY PROCESS

OPERATING PERIOD:

DATE: 4/24/74 TIME OF RECORD: 3:15 HRS TO 18:15 HRS

PROCESS ELAPSED TIME OF PERIOD: START 96.00 HRS / END 111.00 HRS LENGTH OF PERIOD: 15.00 HRS

SUMMARY OF INTEGRATED PROCESS PERFORMANCE:

1.	SO2 REMOVAL	PRSO2 =	96.68 % (ACTUAL)	90.0 % (GOAL)
2.	H2S UTILIZATION	PUH2S =	100.00 % (ACTUAL)	95.0 % (GOAL)
3.	ACID CONVERSION (TO SULFUR)	PVCS =	73.22 % (ACTUAL)	99.0 % (GOAL)
4.	H2 UTILIZATION (TO H2S)	PHCHS =	69.32 % (ACTUAL)	90.0 % (GOAL)
5.	SULFUR RECOVERY	PRS =	76.73 % (ACTUAL)	100.0 % (GOAL) OF SCRBED SO2
			26.77 % (ACTUAL)	25.0 % (GOAL) OF STRIPPED SULFUR
6.	H2 UTILIZATION 4" UNIT	PUH2 =	100.00 %	
7.	RESIDUAL SULFUR ON CARBON	X90A =	0.0393 LB S/LB C	
8.	CARBON RECYCLE RATE (DB)	RC90 =	29.163 LB C(DB)/HR	
9.	ACID LOADING INLET CARBON 6" UNIT	X301C =	0.2230 LB ACID/LB C	
10.	MOISTURE CONTENT INLET CARBON 6" UNIT	X301B =	0.0842 LB H2O/LB C	
11.	ACID LOADING INLET CARBON 8" UNIT	X302C =	0.2230 LB ACID/LB C	
12.	MOISTURE CONTENT INLET CARBON 8" UNIT	X302B =	0.0842 LB H2O/LB C	
13.	TOTAL ACID CONVERTED 8" UNIT	PVC =	85.30 %	
14.	SULFUR CONVERSION (TO H2S)	PSCHS =	83.52 %	
15.	SULFUR CONDENSER EFFICIENCY	ERV400=	162.43 %	

MAJOR EVENTS DURING OPERATING PERIOD:

REPAIRED LEAK IN SULFUR RECIRCULATION
PUMP ON SULFUR CONDENSER AT 100.0 HRS.
LEVEL IN SULFUR POT DOWN FROM NOMINAL OF
9" H2O TO 4" H2O
REBUILT SULFUR LEVEL IN POT TO 8.7" H2O AT 113.4 HRS.

STATUS REPORT OF OPERATING CONDITIONS FOR INTEGRATED OPERATION OF SO2 RECOVERY PROCESS

OPERATING PERIOD:

DATE: 4/24/74 TIME OF RECORD: 3:15 HRS TO 18:15 HRS

PROCESS ELAPSED TIME OF PERIOD: START 96.00 HRS / END 111.00 HRS LENGTH OF PERIOD: 15.00 HRS

SULFUR MATERIAL BALANCE (USING PROCESS H2S):

SO2 SCRBER

IN				
	INLET GAS AS SO2	(G- 13) /	BG10A =	2.3592 LB SULFUR/HR
	INLET C AS RESIDUAL S	(C- 11) /	BC11A =	1.1454 LB SULFUR/HR
	TOTAL IN:	(RV- 1) /	SI10 =	3.5047 LB SULFUR/HR
OUT				
	OUTLET GAS AS SO2	(G- 13) /	BG13A =	0.0784 LB SULFUR/HR
	OUTLET CARBON	(C- 12) /	BC12A =	3.2689 LB SULFUR/HR
	CYCLONE DUST	(C- 11) /	BD11A =	0.0135 LB SULFUR/HR
	COLLECTOR DUST	(D- 12) /	BD12A =	0.0 LB SULFUR/HR
	CARBON WEEPAGE	(CW- 12) /	BCW12A =	0.0005 LB SULFUR/HR
	TOTAL OUT:	(RV- 10) /	SO10 =	3.3614 LB SULFUR/HR

6" DIA CARBON RECONDITIONER

IN				
	INLET CARBON	(C- 12) /	BC12A =	3.2689 LB SULFUR/HR
	TOTAL IN:	(RV-300) /	SI300 =	3.2689 LB SULFUR/HR
OUT				
	OUTLET CARBON	(C-201) /	BC201A =	3.2689 LB SULFUR/HR
	CYCLONE DUST	(D-301) /	BD301A =	0.0 LB SULFUR/HR
	TOTAL OUT:	(RV-300) /	SO300 =	3.2689 LB SULFUR/HR

SULFUR GENERATOR

IN				
	INLET GAS AS H2S (CYL)	(G-201) /	BG201B =	0.0 LB SULFUR/HR
	INLET GAS AS H2S (PROC)	(G-201) /	BG203R =	5.4597 LB SULFUR/HR
	INLET CARBON	(C-201) /	BC201A =	3.2689 LB SULFUR/HR
	TOTAL IN:	(RV-200) /	SI200 =	8.7286 LB SULFUR/HR
OUT				
	OUTLET GAS AS H2S	(G-205) /	BG205B =	0.0 LB SULFUR/HR
	OUTLET GAS AS SO2	(G-205) /	BG205A =	0.3150 LB SULFUR/HR
	OUTLET CARBON	(C-202) /	BC202A =	7.6825 LB SULFUR/HR
	TOTAL OUT:	(RV-210) /	SO200 =	7.9975 LB SULFUR/HR

H2S GENERATOR/SULFUR STRIPPER

IN				
	INLET CARBON	(C-202) / BC202A =	7.6825	LB SULFUR/HR
	TOTAL IN:	(RV-100) / SI100 =	7.6825	LB SULFUR/HR
OUT				
	OUTLET CARBON	(C-103) / BC103A =	1.1454	LB SULFUR/HR
	OUTLET GAS AS H2S	(G-104) / BG104B =	5.4597	LB SULFUR/HR
	OUTLET GAS AS S	(G-104) / BG104S =	1.7500	LB SULFUR/HR
	CYCLONE DUST	(D-101) / BD101A =	0.0	LB SULFUR/HR
	FILTER DUST	(D-102) / BD102A =	0.0	LB SULFUR/HR
	TOTAL OUT:	(RV-100) / SO100 =	8.3551	LB SULFUR/HR

OVERALL SULFUR BALANCE

IN				
	INLET GAS 18" UNIT AS SO2	(G- 10) / BG10A =	2.3592	LB SULFUR/HR
	INLET GAS 8" UNIT AS CYL H2S	(G-201) / BG201B =	0.0	LB SULFUR/HR
	TOTAL SULFUR IN:		2.3592	LB SULFUR/HR
OUT				
	OUTLET GAS 18" UNIT AS SO2	(G- 13) / BG13A =	0.0784	LB SULFUR/HR
	CYCLONE DUST 18" UNIT	(D- 11) / BD11A =	0.0135	LB SULFUR/HR
	COLLECTOR DUST 18" UNIT	(D- 12) / BD12A =	0.0	LB SULFUR/HR
	CARBON WEEPAGE 18" UNIT	(CW- 12) / BCW12A =	0.0005	LB SULFUR/HR
	CYCLONE DUST 8" UNIT	(D-301) / BD301A =	0.0	LB SULFUR/HR
	OUTLET GAS 8" UNIT AS H2S	(G-205) / BG205B =	0.0	LB SULFUR/HR
	OUTLET GAS 8" UNIT AS SO2	(G-205) / BG205A =	0.3150	LB SULFUR/HR
	OUTLET GAS 4" UNIT AS H2S	(G-104) / BG104B =	0.0	LB SULFUR/HR
	OUTLET GAS 4" UNIT AS S	(G-104) / BG104S =	1.7500	LB SULFUR/HR
	CYCLONE DUST 4" UNIT	(D-101) / BD101A =	0.0	LB SULFUR/HR
	FILTER DUST 4" UNIT	(D-102) / BD102A =	0.0	LB SULFUR/HR
	TOTAL SULFUR OUT:		2.1575	LB SULFUR/HR

HYDROGEN MATERIAL BALANCE:

S U L F U R G E N E R A T O R

I N				
	INLET GAS AS H2	(G-203) / BG203C =	0.0	LB HYDROGEN/HR
	INLET GAS AS H2S (CYL)	(G-203) / BG203H =	0.0	LB HYDROGEN/HR
	INLET GAS AS H2S (PROC)	(G-203) / BG203 =	0.3411	LB HYDROGEN/HR
	INLET GAS AS H2O	(G-203) / BG203D =	0.3451	LB HYDROGEN/HR
	INLET CARBON	(C-203) / BC201H =	0.4054	LB HYDROGEN/HR
	T O T A L I N :	(RV-200) / HI200 =	0.9917	LB HYDROGEN/HR
O U T				
	OUTLET GAS AS H2	(G-205) / BG205C =	0.0	LB HYDROGEN/HR
	OUTLET GAS AS H2S	(G-205) / BG205H =	0.0	LB HYDROGEN/HR
	OUTLET GAS AS H2O	(G-205) / BG205D =	0.6908	LB HYDROGEN/HR
	OUTLET CARBON	(C-202) / BC202H =	0.1241	LB HYDROGEN/HR
	T O T A L O U T :	(RV-200) / HO200 =	0.8149	LB HYDROGEN/HR

H 2 S G E N E R A T O R / S U L F U R S T R I P P E R

I N				
	INLET GAS AS H2	(G-103) / BG103C =	0.4921	LB HYDROGEN/HR
	INLET CARBON	(C-202) / BC202H =	0.1241	LB HYDROGEN/HR
	T O T A L I N :	(RV-100) / HI100 =	0.6162	LB HYDROGEN/HR
O U T				
	OUTLET GAS AS H2	(G-104) / BG104C =	0.0	LB HYDROGEN/HR
	OUTLET GAS AS H2S	(G-104) / BG104H =	0.3411	LB HYDROGEN/HR
	OUTLET GAS AS H2O	(G-104) / BG104D =	0.2221	LB HYDROGEN/HR
	T O T A L O U T :	(RV-100) / HO100 =	0.5632	LB HYDROGEN/HR

APPENDIX A-12-8

EXPERIMENTAL DATA AND RESULTS FOR INTEGRAL RUN IR-2-7 (111 - 126 hours)

STATUS REPORT OF OPERATING CONDITIONS FOR INTEGRATED OPERATION OF SO2 RECOVERY PROCESS

OPERATING PERIOD:

DATE: 4/24/74 TIME OF RECORD: 18:15 HRS TO 24: 0 HRS
DATE: 4/25/74 TIME OF RECORD: 0: 0 HRS TO 9:15 HRS

PROCESS ELAPSED TIME OF PERIOD: START 111.00 HRS / END 126.00 HRS LENGTH OF PERIOD: 15.00 HRS

PROCESS VARIABLES FOR OPERATING PERIOD:

S O 2 S O R B E R

22:15 HRS	115.00 HRS (ET)	SO2 CONC INLET FLUE GAS	(GS- 10) / Y10(1,T)	=	1950.000	PPM (VOLUME)
2:15 HRS	119.00 HRS (ET)	SO2 CONC INLET FLUE GAS	(GS- 10) / Y10(1,T)	=	2000.000	PPM (VOLUME)
6:50 HRS	123.60 HRS (ET)	SO2 CONC INLET FLUE GAS	(GS- 10) / Y10(1,T)	=	2000.000	PPM (VOLUME)
10: 2 HRS	126.80 HRS (ET)	SO2 CONC INLET FLUE GAS	(GS- 10) / Y10(1,T)	=	1975.000	PPM (VOLUME)
A V E R A G E :		SO2 CONC INLET FLUE GAS	(GS- 10) / AY10A	=	1981.250	PPM (VOLUME)
22:15 HRS	115.00 HRS (ET)	SO2 CONC OUTLET FLUE GAS	(GS- 16) / Y16(1,T)	=	87.500	PPM (VOLUME)
2:15 HRS	119.00 HRS (ET)	SO2 CONC OUTLET FLUE GAS	(GS- 16) / Y16(1,T)	=	110.000	PPM (VOLUME)
6:50 HRS	123.60 HRS (ET)	SO2 CONC OUTLET FLUE GAS	(GS- 16) / Y16(1,T)	=	80.000	PPM (VOLUME)
10:15 HRS	127.00 HRS (ET)	SO2 CONC OUTLET FLUE GAS	(GS- 16) / Y16(1,T)	=	95.000	PPM (VOLUME)
A V E R A G E :		SO2 CONC OUTLET FLUE GAS	(GS- 16) / AY16A	=	93.125	PPM (VOLUME)
18:15 HRS	111.00 HRS (ET)	H2O CONC INLET FLUE GAS	(GS- 10) / Y10(4,T)	=	10.000	% (VOLUME)
9:15 HRS	126.00 HRS (ET)	H2O CONC INLET FLUE GAS	(GS- 10) / Y10(4,T)	=	10.000	% (VOLUME)
A V E R A G E :		H2O CONC INLET FLUE GAS	(GS- 10) / AY10D	=	10.000	% (VOLUME)
18:15 HRS	111.00 HRS (ET)	ORIFICE PRESSURE DROP	(DP- 10) / DP10(T)	=	2.300	INCHES H2O
2:15 HRS	119.00 HRS (ET)	ORIFICE PRESSURE DROP	(DP- 10) / DP10(T)	=	2.200	INCHES H2O
10:15 HRS	127.00 HRS (ET)	ORIFICE PRESSURE DROP	(DP- 10) / DP10(T)	=	2.300	INCHES H2O
A V E R A G E :		ORIFICE PRESSURE DROP	(DP- 10) / ADP10	=	2.267	INCHES H2O
21:20 HRS	114.10 HRS (ET)	ORIFICE TEMPERATURE	(TL- 10) / TL10(T)	=	301.000	DEG F
23:26 HRS	116.20 HRS (ET)	ORIFICE TEMPERATURE	(TL- 10) / TL10(T)	=	305.000	DEG F
2:15 HRS	119.00 HRS (ET)	ORIFICE TEMPERATURE	(TL- 10) / TL10(T)	=	300.000	DEG F
4:15 HRS	121.00 HRS (ET)	ORIFICE TEMPERATURE	(TL- 10) / TL10(T)	=	299.000	DEG F
6:20 HRS	123.10 HRS (ET)	ORIFICE TEMPERATURE	(TL- 10) / TL10(T)	=	298.000	DEG F
9: 8 HRS	125.90 HRS (ET)	ORIFICE TEMPERATURE	(TL- 10) / TL10(T)	=	298.000	DEG F
A V E R A G E :		ORIFICE TEMPERATURE	(TL- 10) / ATL10	=	300.167	DEG F
20:15 HRS	113.00 HRS (ET)	WEIGHT CYCLONE DUST	(D- 11) / CD11(T)	=	0.0	LB DUST
4:15 HRS	121.00 HRS (ET)	WEIGHT CYCLONE DUST	(D- 11) / CD11(T)	=	1.500	LB DUST
T O T A L :		WEIGHT CYCLONE DUST	(D- 11) / WD11	=	1.500	LB DUST
R A T E :		WEIGHT CYCLONE DUST	(D- 11) / RD11	=	0.188	LB DUST/HR
20:15 HRS	113.00 HRS (ET)	WEIGHT COLLECTOR DUST	(D- 12) / CD12(T)	=	0.0	LB DUST
4:15 HRS	121.00 HRS (ET)	WEIGHT COLLECTOR DUST	(D- 12) / CD12(T)	=	0.0	LB DUST
T O T A L :		WEIGHT COLLECTOR DUST	(D- 12) / WD12	=	0.0	LB DUST
R A T E :		WEIGHT COLLECTOR DUST	(D- 12) / RD12	=	0.0	LB DUST/HR
20:15 HRS	113.00 HRS (ET)	WEIGHT CARBON WEEPAGE	(CW- 12) / CW12(T)	=	0.0	LB DUST
4:15 HRS	121.00 HRS (ET)	WEIGHT CARBON WEEPAGE	(CW- 12) / CW12(T)	=	0.026	LB DUST
T O T A L :		WEIGHT CARBON WEEPAGE	(CW- 12) / WCW12	=	0.026	LB DUST
R A T E :		WEIGHT CARBON WEEPAGE	(CW- 12) / RCW12	=	0.003	LB DUST/HR

20:15 HRS	113.00 HRS (ET)	% TOT S ON CYCLONE DUST	(D- 11) / D11(1,T)	=	7.160	% (WEIGHT)
4:15 HRS	121.00 HRS (ET)	% TOT S ON CYCLONE DUST	(D- 11) / D11(1,T)	=	7.180	% (WEIGHT)
12:15 HRS	129.00 HRS (ET)	% TOT S ON CYCLONE DUST	(D- 11) / D11(1,T)	=	6.940	% (WEIGHT)
	A V E R A G E :	% TOT S ON CYCLONE DUST	(D- 11) / AD11A	=	7.093	% (WEIGHT)
20:15 HRS	113.00 HRS (ET)	% TOT S ON COLLECTOR DUST	(D- 12) / D12(1,T)	=	7.160	% (WEIGHT)
4:15 HRS	121.00 HRS (ET)	% TOT S ON COLLECTOR DUST	(D- 12) / D12(1,T)	=	7.130	% (WEIGHT)
12:15 HRS	129.00 HRS (ET)	% TOT S ON COLLECTOR DUST	(D- 12) / D12(1,T)	=	6.940	% (WEIGHT)
	A V E R A G E :	% TOT S ON COLLECTOR DUST	(D- 12) / AD12A	=	7.077	% (WEIGHT)

6" DIA CARBON PRECONDITIONER

21:15 HRS	114.00 HRS (ET)	% TOT S ON INLET CARBON	(CS-301) / Z301(1,T) =	8.280	%	(WEIGHT)
1:15 HRS	118.00 HRS (ET)	% TOT S ON INLET CARBON	(CS-301) / Z301(1,T) =	8.120	%	(WEIGHT)
5:15 HRS	122.00 HRS (ET)	% TOT S ON INLET CARBON	(CS-301) / Z301(1,T) =	8.280	%	(WEIGHT)
9:15 HRS	126.00 HRS (ET)	% TOT S ON INLET CARBON	(CS-301) / Z301(1,T) =	8.640	%	(WEIGHT)
	A V E R A G E :	% TOT S ON INLET CARBON	(CS-301) / AZ301A =	8.330	%	(WEIGHT)
21:15 HRS	114.00 HRS (ET)	% H2O ON INLET CARBON	(CS-301) / Z301(2,T) =	5.900	%	(WEIGHT)
1:15 HRS	118.00 HRS (ET)	% H2O ON INLET CARBON	(CS-301) / Z301(2,T) =	6.900	%	(WEIGHT)
5:15 HRS	122.00 HRS (ET)	% H2O ON INLET CARBON	(CS-301) / Z301(2,T) =	7.900	%	(WEIGHT)
9:15 HRS	126.00 HRS (ET)	% H2O ON INLET CARBON	(CS-301) / Z301(2,T) =	9.100	%	(WEIGHT)
	A V E R A G E :	% H2O ON INLET CARBON	(CS-301) / AZ301B =	7.450	%	(WEIGHT)
20:15 HRS	113.00 HRS (ET)	WEIGHT CYCLONE DUST	(D-301) / CD301(T) =	0.0	LB	DUST
4:15 HRS	121.00 HRS (ET)	WEIGHT CYCLONE DUST	(D-301) / CD301(T) =	0.0	LB	DUST
	T O T A L :	WEIGHT CYCLONE DUST	(D-301) / WD301 =	0.0	LB	DUST
	R A T E :	WEIGHT CYCLONE DUST	(D-301) / RD301 =	0.0	LB	DUST/HR
18:15 HRS	111.00 HRS (ET)	% TOT S ON CYCLONE DUST	(D-301) / D301(1,T) =	0.0	%	(WEIGHT)
9:15 HRS	126.00 HRS (ET)	% TOT S ON CYCLONE DUST	(D-301) / D301(1,T) =	0.0	%	(WEIGHT)
	A V E R A G E :	% TOT S ON CYCLONE DUST	(D-301) / AD301A =	0.0	%	(WEIGHT)

S U L F U R G E N E R A T O R

17:38 HRS	110.40 HRS (ET)	SO2 CONC OUTLET GAS	(GS-206) / Y206(1,T) =	1.400	% (VOLUME)
2:26 HRS	119.20 HRS (ET)	SO2 CONC OUTLET GAS	(GS-206) / Y206(1,T) =	1.210	% (VOLUME)
8: 8 HRS	124.90 HRS (ET)	SO2 CONC OUTLET GAS	(GS-206) / Y206(1,T) =	0.830	% (VOLUME)
	A V E R A G E :	SO2 CONC OUTLET GAS	(GS-206) / AY206A =	1.147	% (VOLUME)
4:26 HRS	97.20 HRS (ET)	H2S CONC INLET GAS	(GS-200) / Y200(2,T) =	26.800	% (VOLUME)
19:26 HRS	112.20 HRS (ET)	H2S CONC INLET GAS	(GS-200) / Y200(2,T) =	25.000	% (VOLUME)
6:32 HRS	123.30 HRS (ET)	H2S CONC INLET GAS	(GS-200) / Y200(2,T) =	21.400	% (VOLUME)
	A V E R A G E :	H2S CONC INLET GAS	(GS-200) / AY200B =	24.400	% (VOLUME)
17:38 HRS	110.40 HRS (ET)	H2S CONC OUTLET GAS	(GS-206) / Y206(2,T) =	0.0	% (VOLUME)
2:26 HRS	119.20 HRS (ET)	H2S CONC OUTLET GAS	(GS-206) / Y206(2,T) =	0.025	% (VOLUME)
8: 8 HRS	124.90 HRS (ET)	H2S CONC OUTLET GAS	(GS-206) / Y206(2,T) =	0.072	% (VOLUME)
	A V E R A G E :	H2S CONC OUTLET GAS	(GS-206) / AY206B =	0.032	% (VOLUME)
4:26 HRS	97.20 HRS (ET)	H2 CONC INLET GAS	(GS-200) / Y200(3,T) =	0.0	% (VOLUME)
19:26 HRS	112.20 HRS (ET)	H2 CONC INLET GAS	(GS-200) / Y200(3,T) =	0.0	% (VOLUME)
6:32 HRS	123.30 HRS (ET)	H2 CONC INLET GAS	(GS-200) / Y200(3,T) =	0.0	% (VOLUME)
	A V E R A G E :	H2 CONC INLET GAS	(GS-200) / AY200C =	0.0	% (VOLUME)
17:38 HRS	110.40 HRS (ET)	H2 CONC OUTLET GAS	(GS-206) / Y206(3,T) =	0.0	% (VOLUME)
2:26 HRS	119.20 HRS (ET)	H2 CONC OUTLET GAS	(GS-206) / Y206(3,T) =	0.0	% (VOLUME)
8: 8 HRS	124.90 HRS (ET)	H2 CONC OUTLET GAS	(GS-206) / Y206(3,T) =	0.0	% (VOLUME)
	A V E R A G E :	H2 CONC OUTLET GAS	(GS-206) / AY206C =	0.0	% (VOLUME)
4:26 HRS	97.20 HRS (ET)	H2O CONC INLET GAS	(GS-200) / Y200(4,T) =	20.000	% (VOLUME)
19:26 HRS	112.20 HRS (ET)	H2O CONC INLET GAS	(GS-200) / Y200(4,T) =	22.300	% (VOLUME)
6:32 HRS	123.30 HRS (ET)	H2O CONC INLET GAS	(GS-200) / Y200(4,T) =	24.100	% (VOLUME)
	A V E R A G E :	H2O CONC INLET GAS	(GS-200) / AY200D =	22.133	% (VOLUME)
17:38 HRS	110.40 HRS (ET)	H2O CONC OUTLET GAS	(GS-206) / Y206(4,T) =	52.600	% (VOLUME)
2:26 HRS	119.20 HRS (ET)	H2O CONC OUTLET GAS	(GS-206) / Y206(4,T) =	51.600	% (VOLUME)
8: 8 HRS	124.90 HRS (ET)	H2O CONC OUTLET GAS	(GS-206) / Y206(4,T) =	53.200	% (VOLUME)
	A V E R A G E :	H2O CONC OUTLET GAS	(GS-206) / AY206D =	52.467	% (VOLUME)
4:26 HRS	97.20 HRS (ET)	N2 CONC INLET GAS	(GS-200) / Y200(5,T) =	52.800	% (VOLUME)
19:26 HRS	112.20 HRS (ET)	N2 CONC INLET GAS	(GS-200) / Y200(5,T) =	52.100	% (VOLUME)
6:32 HRS	123.30 HRS (ET)	N2 CONC INLET GAS	(GS-200) / Y200(5,T) =	54.200	% (VOLUME)
	A V E R A G E :	N2 CONC INLET GAS	(GS-200) / AY200E =	53.033	% (VOLUME)
17:38 HRS	110.40 HRS (ET)	N2 CONC OUTLET GAS	(GS-206) / Y206(5,T) =	45.700	% (VOLUME)
2:26 HRS	119.20 HRS (ET)	N2 CONC OUTLET GAS	(GS-206) / Y206(5,T) =	47.200	% (VOLUME)
8: 8 HRS	124.90 HRS (ET)	N2 CONC OUTLET GAS	(GS-206) / Y206(5,T) =	45.600	% (VOLUME)
	A V E R A G E :	N2 CONC OUTLET GAS	(GS-206) / AY206E =	46.167	% (VOLUME)
18:15 HRS	111.00 HRS (ET)	N2 INLET VOL FLOW RATE	(G-200) / G200(5,T) =	121.000	CFH (70 DEG F)
9:15 HRS	126.00 HRS (ET)	N2 INLET VOL FLOW RATE	(G-200) / G200(5,T) =	121.000	CFH (70 DEG F)
	A V E R A G E :	N2 INLET VOL FLOW RATE	(G-200) / AG200E =	121.000	CFH (70 DEG F)
21:15 HRS	114.00 HRS (ET)	% TOT S ON INLET CARBON	(GS-302) / Z302(1,T) =	8.280	% (WEIGHT)
1:15 HRS	118.00 HRS (ET)	% TOT S ON INLET CARBON	(GS-302) / Z302(1,T) =	8.120	% (WEIGHT)
5:15 HRS	122.00 HRS (ET)	% TOT S ON INLET CARBON	(GS-302) / Z302(1,T) =	8.200	% (WEIGHT)
9:15 HRS	126.00 HRS (ET)	% TOT S ON INLET CARBON	(GS-302) / Z302(1,T) =	8.640	% (WEIGHT)
	A V E R A G E :	% TOT S ON INLET CARBON	(GS-302) / AZ302A =	8.330	% (WEIGHT)
21:15 HRS	114.00 HRS (ET)	% TOT S ON OUTLET CARBON	(GS-200) / Z200(1,T) =	19.440	% (WEIGHT)
1:15 HRS	118.00 HRS (ET)	% TOT S ON OUTLET CARBON	(GS-200) / Z200(1,T) =	19.520	% (WEIGHT)

5:15 HRS	122.00 HRS (ET)	% TOT S ON OUTLET CARBON	(CS-200) / Z200(1,T) =	19.640	% (WEIGHT)
9:15 HRS	126.00 HRS (ET)	% TOT S ON OUTLET CARBON	(CS-200) / Z200(1,T) =	19.960	% (WEIGHT)
	A V E R A G E :	% TOT S ON OUTLET CARBON	(CS-200) / AZ200A =	19.640	% (WEIGHT)
21:15 HRS	114.00 HRS (ET)	% H2O ON INLET CARBON	(CS-302) / Z302(2,T) =	5.900	% (WEIGHT)
1:15 HRS	118.00 HRS (ET)	% H2O ON INLET CARBON	(CS-302) / Z302(2,T) =	6.900	% (WEIGHT)
5:15 HRS	122.00 HRS (ET)	% H2O ON INLET CARBON	(CS-302) / Z302(2,T) =	7.900	% (WEIGHT)
9:15 HRS	126.00 HRS (ET)	% H2O ON INLET CARBON	(CS-302) / Z302(2,T) =	9.100	% (WEIGHT)
	A V E R A G E :	% H2O ON INLET CARBON	(CS-302) / AZ302B =	7.450	% (WEIGHT)
21:15 HRS	114.00 HRS (ET)	% H2O ON OUTLET CARBON	(CS-200) / Z200(2,T) =	2.900	% (WEIGHT)
1:15 HRS	118.00 HRS (ET)	% H2O ON OUTLET CARBON	(CS-200) / Z200(2,T) =	2.400	% (WEIGHT)
5:15 HRS	122.00 HRS (ET)	% H2O ON OUTLET CARBON	(CS-200) / Z200(2,T) =	2.800	% (WEIGHT)
9:15 HRS	126.00 HRS (ET)	% H2O ON OUTLET CARBON	(CS-200) / Z200(2,T) =	3.200	% (WEIGHT)
	A V E R A G E :	% H2O ON OUTLET CARBON	(CS-200) / AZ200B =	2.825	% (WEIGHT)
21:15 HRS	114.00 HRS (ET)	% ACID ON OUTLET CARBON	(CS-200) / Z200(3,T) =	3.040	% (WEIGHT)
1:15 HRS	118.00 HRS (ET)	% ACID ON OUTLET CARBON	(CS-200) / Z200(3,T) =	2.400	% (WEIGHT)
5:15 HRS	122.00 HRS (ET)	% ACID ON OUTLET CARBON	(CS-200) / Z200(3,T) =	2.350	% (WEIGHT)
9:15 HRS	126.00 HRS (ET)	% ACID ON OUTLET CARBON	(CS-200) / Z200(3,T) =	2.450	% (WEIGHT)
	A V E R A G E :	% ACID ON OUTLET CARBON	(CS-200) / AZ200C =	2.560	% (WEIGHT)

H2S GENERATOR/SULFUR STRIPPER

1: 2 HRS	93.80 HRS (ET)	H2 CONC INLET GAS	(GS-100) / Y100(3,T) =	50.600	% (VOLUME)
21:15 HRS	114.00 HRS (ET)	H2 CONC INLET GAS	(GS-100) / Y100(3,T) =	51.000	% (VOLUME)
4:45 HRS	121.50 HRS (ET)	H2 CONC INLET GAS	(GS-100) / Y100(3,T) =	50.700	% (VOLUME)
	A V E R A G E :	H2 CONC INLET GAS	(GS-100) / AY100C =	50.767	% (VOLUME)
6:15 HRS	99.00 HRS (ET)	H2 CONC OUTLET GAS	(GS-108) / Y108(3,T) =	0.0	% (VOLUME)
23: 2 HRS	115.80 HRS (ET)	H2 CONC OUTLET GAS	(GS-108) / Y108(3,T) =	0.0	% (VOLUME)
3:50 HRS	120.60 HRS (ET)	H2 CONC OUTLET GAS	(GS-108) / Y108(3,T) =	0.0	% (VOLUME)
9:26 HRS	126.20 HRS (ET)	H2 CONC OUTLET GAS	(GS-108) / Y108(3,T) =	0.0	% (VOLUME)
	A V E R A G E :	H2 CONC OUTLET GAS	(GS-108) / AY108C =	0.0	% (VOLUME)
1: 2 HRS	93.80 HRS (ET)	N2 CONC INLET GAS	(GS-100) / Y100(5,T) =	49.400	% (VOLUME)
21:15 HRS	114.00 HRS (ET)	N2 CONC INLET GAS	(GS-100) / Y100(5,T) =	49.000	% (VOLUME)
4:45 HRS	121.50 HRS (ET)	N2 CONC INLET GAS	(GS-100) / Y100(5,T) =	49.300	% (VOLUME)
	A V E R A G E :	N2 CONC INLET GAS	(GS-100) / AY100E =	49.233	% (VOLUME)
6:15 HRS	99.00 HRS (ET)	N2 CONC OUTLET GAS	(GS-108) / Y108(5,T) =	52.200	% (VOLUME)
23: 2 HRS	115.80 HRS (ET)	N2 CONC OUTLET GAS	(GS-108) / Y108(5,T) =	52.300	% (VOLUME)
3:50 HRS	120.60 HRS (ET)	N2 CONC OUTLET GAS	(GS-108) / Y108(5,T) =	52.600	% (VOLUME)
9:26 HRS	126.20 HRS (ET)	N2 CONC OUTLET GAS	(GS-108) / Y108(5,T) =	52.600	% (VOLUME)
	A V E R A G E :	N2 CONC OUTLET GAS	(GS-108) / AY108E =	52.425	% (VOLUME)
6:15 HRS	99.00 HRS (ET)	H2S CONC OUTLET GAS	(GS-108) / Y108(2,T) =	29.900	% (VOLUME)
23: 2 HRS	115.80 HRS (ET)	H2S CONC OUTLET GAS	(GS-108) / Y108(2,T) =	27.700	% (VOLUME)
3:50 HRS	120.60 HRS (ET)	H2S CONC OUTLET GAS	(GS-108) / Y108(2,T) =	26.800	% (VOLUME)
9:26 HRS	126.20 HRS (ET)	H2S CONC OUTLET GAS	(GS-108) / Y108(2,T) =	26.500	% (VOLUME)
	A V E R A G E :	H2S CONC OUTLET GAS	(GS-108) / AY108B =	27.725	% (VOLUME)
6:15 HRS	99.00 HRS (ET)	H2O CONC OUTLET GAS	(GS-108) / Y108(4,T) =	17.600	% (VOLUME)
23: 2 HRS	115.80 HRS (ET)	H2O CONC OUTLET GAS	(GS-108) / Y108(4,T) =	19.700	% (VOLUME)
3:50 HRS	120.60 HRS (ET)	H2O CONC OUTLET GAS	(GS-108) / Y108(4,T) =	20.200	% (VOLUME)
9:26 HRS	126.20 HRS (ET)	H2O CONC OUTLET GAS	(GS-108) / Y108(4,T) =	20.600	% (VOLUME)
	A V E R A G E :	H2O CONC OUTLET GAS	(GS-108) / AY108D =	19.525	% (VOLUME)
18:15 HRS	111.00 HRS (ET)	N2 INLET VOL FLOW RATE	(G-100) / G100(5,T) =	121.000	CFH (70 DEG F)
9:15 HRS	126.00 HRS (ET)	N2 INLET VOL FLOW RATE	(G-100) / G100(5,T) =	121.000	CFH (70 DEG F)
	A V E R A G E :	N2 INLET VOL FLOW RATE	(G-100) / AG100E =	121.000	CFH (70 DEG F)
20:15 HRS	113.00 HRS (ET)	WEIGHT CYCLONE DUST	(D-101) / CD101(T) =	0.0	LB DUST
4:15 HRS	121.00 HRS (ET)	WEIGHT CYCLONE DUST	(D-101) / CD101(T) =	0.008	LB DUST
	T O T A L :	WEIGHT CYCLONE DUST	(D-101) / WD101 =	0.008	LB DUST
	R A T E :	WEIGHT CYCLONE DUST	(D-101) / RD101 =	0.001	LB DUST/HR
20:15 HRS	113.00 HRS (ET)	WEIGHT FILTER DUST	(D-102) / CD102(T) =	0.0	LB DUST
4:15 HRS	121.00 HRS (ET)	WEIGHT FILTER DUST	(D-102) / CD102(T) =	0.0	LB DUST
	T O T A L :	WEIGHT FILTER DUST	(D-102) / WD102 =	0.0	LB DUST
	R A T E :	WEIGHT FILTER DUST	(D-102) / RD102 =	0.0	LB DUST/HR
21:15 HRS	114.00 HRS (ET)	% TOT S ON CYCLONE DUST	(D-101) / D101(1,T) =	3.440	% (WEIGHT)
1:15 HRS	118.00 HRS (ET)	% TOT S ON CYCLONE DUST	(D-101) / D101(1,T) =	4.000	% (WEIGHT)
5:15 HRS	122.00 HRS (ET)	% TOT S ON CYCLONE DUST	(D-101) / D101(1,T) =	4.640	% (WEIGHT)
9:15 HRS	126.00 HRS (ET)	% TOT S ON CYCLONE DUST	(D-101) / D101(1,T) =	3.960	% (WEIGHT)
	A V E R A G E :	% TOT S ON CYCLONE DUST	(D-101) / AD101A =	4.010	% (WEIGHT)
18:15 HRS	111.00 HRS (ET)	% TOT S ON FILTER DUST	(D-102) / D102(1,T) =	0.0	% (WEIGHT)
9:15 HRS	126.00 HRS (ET)	% TOT S ON FILTER DUST	(D-102) / D102(1,T) =	0.0	% (WEIGHT)
	A V E R A G E :	% TOT S ON FILTER DUST	(D-102) / AD102A =	0.0	% (WEIGHT)

C A R B O N I N V E N T O R Y H O P P E R

21:15 HRS	114.00 HRS (ET)	% RESIDUAL S ON CARBON	(CS- 90) /	Z90(1,T) =	3.440	% (WEIGHT)
1:15 HRS	118.00 HRS (ET)	% RESIDUAL S ON CARBON	(CS- 90) /	Z90(1,T) =	4.000	% (WEIGHT)
5:15 HRS	122.00 HRS (ET)	% RESIDUAL S ON CARBON	(CS- 90) /	Z90(1,T) =	4.640	% (WEIGHT)
9:15 HRS	126.00 HRS (ET)	% RESIDUAL S ON CARBON	(CS- 90) /	Z90(1,T) =	3.960	% (WEIGHT)
A V E R A G E :		% RESIDUAL S ON CARBON	(CS- 90) /	AZ90A =	4.010	% (WEIGHT)
21:15 HRS	114.00 HRS (ET)	% RESIDUAL H2O ON CARBON	(CS- 90) /	Z90(2,T) =	2.100	% (WEIGHT)
1:15 HRS	118.00 HRS (ET)	% RESIDUAL H2O ON CARBON	(CS- 90) /	Z90(2,T) =	2.900	% (WEIGHT)
5:15 HRS	122.00 HRS (ET)	% RESIDUAL H2O ON CARBON	(CS- 90) /	Z90(2,T) =	1.700	% (WEIGHT)
9:15 HRS	126.00 HRS (ET)	% RESIDUAL H2O ON CARBON	(CS- 90) /	Z90(2,T) =	2.500	% (WEIGHT)
A V E R A G E :		% RESIDUAL H2O ON CARBON	(CS- 90) /	AZ90B =	2.300	% (WEIGHT)
18:15 HRS	111.00 HRS (ET)	CARBON RECYCLE RATE	(C- 90) /	C90(1,T) =	31.000	LB MAT'L/HR
9:15 HRS	126.00 HRS (ET)	CARBON RECYCLE RATE	(C- 90) /	C90(1,T) =	31.000	LB MAT'L/HR
A V E R A G E :		CARBON RECYCLE RATE	(C- 90) /	AC90A =	31.000	LB MAT'L/HR

S U L F U R C O N D E N S E R

22:15 HRS	115.00 HRS (ET)	WEIGHT SULFUR COLLECTED	(S-401) /	S401(T) =	0.0	LB SULFUR
2:15 HRS	119.00 HRS (ET)	WEIGHT SULFUR COLLECTED	(S-401) /	S401(T) =	7.000	LB SULFUR
6:15 HRS	123.00 HRS (ET)	WEIGHT SULFUR COLLECTED	(S-401) /	S401(T) =	6.750	LB SULFUR
10:15 HRS	127.00 HRS (ET)	WEIGHT SULFUR COLLECTED	(S-401) /	S401(T) =	7.300	LB SULFUR
T O T A L :		WEIGHT SULFUR COLLECTED	(S-401) /	WS401 =	21.050	LB SULFUR
R A T E :		WEIGHT SULFUR COLLECTED	(S-401) /	RS401 =	1.754	LB SULFUR/HR

STATUS REPORT OF OPERATING CONDITIONS FOR INTEGRATED OPERATION OF SO2 RECOVERY PROCESS

OPERATING PERIOD:

DATE: 4/24/74 TIME OF RECORD: 18:15 HRS TO 24: 0 HRS
DATE: 4/25/74 TIME OF RECORD: 0: 0 HRS TO 9:15 HRS

PROCESS ELAPSED TIME OF PERIOD: START 111.00 HRS / END 126.00 HRS LENGTH OF PERIOD: 15.00 HRS

SUMMARY OF INTEGRATED PROCESS PERFORMANCE:

1.	SO2 REMOVAL	PRSO2 =	55.30 % (ACTUAL)	90.0 % (GOAL)
2.	H2S UTILIZATION	PUH2S =	59.85 % (ACTUAL)	95.0 % (GOAL)
3.	ACID CONVERSION (TO SULFUR)	PVCS =	72.73 % (ACTUAL)	99.0 % (GOAL)
4.	H2 UTILIZATION (TO H2S)	PHCHS =	67.36 % (ACTUAL)	90.0 % (GOAL)
5.	SULFUR RECOVERY	PRS =	79.01 % (ACTUAL) 27.93 % (ACTUAL)	100.0 % (GOAL) OF SORBED SO2 25.0 % (GOAL) OF STRIPPED SULFUR
6.	H2 UTILIZATION 4" UNIT	PUH2 =	100.00 %	
7.	RESIDUAL SULFUR ON CARBON	X90A =	0.0428 LB S/LB C	
8.	CARBON RECYCLE RATE (DB)	RC90 =	25.044 LB C(DB)/HR	
9.	ACID LOADING INLET CARBON 6" UNIT	X301C =	0.2159 LB ACID/LB C	
10.	MOISTURE CONTENT INLET CARBON 6" UNIT	X301B =	0.1013 LB H2O/LB C	
11.	ACID LOADING INLET CARBON 8" UNIT	X302C =	0.2159 LB ACID/LB C	
12.	MOISTURE CONTENT INLET CARBON 8" UNIT	X302B =	0.1013 LB H2O/LB C	
13.	TOTAL ACID CONVERTED 8" UNIT	PVC =	84.36 %	
14.	SULFUR CONVERSION (TO H2S)	PSCHS =	84.45 %	
15.	SULFUR CONDENSER EFFICIENCY	ERV400=	179.64 %	

MAJOR EVENTS DURING OPERATING PERIOD:

PILOT PLANT PLACED ON STANDBY AT
126.6 HRS. TO CORRECT CARBON FEED PROBLEM
AT STG 6 OF THE 4" UNIT.

STATUS REPORT OF OPERATING CONDITIONS FOR INTEGRATED OPERATION OF SO2 RECOVERY PROCESS

OPERATING PERIOD:

DATE: 4/24/74 TIME OF RECORD: 18:15 HRS TO 24: 0 HRS
DATE: 4/25/74 TIME OF RECORD: 0: 0 HRS TO 9:15 HRS

PROCESS ELAPSED TIME OF PERIOD: START 111.00 HRS / END 126.00 HRS LENGTH OF PERIOD: 15.00 HRS

SULFUR MATERIAL BALANCE (USING PROCESS H2S):

SO2 SCRBER

IN				
	INLET GAS AS SO2	(G-- 13) /	BG10A =	2.3297 LB SULFUR/HR
	INLET C AS RESIDUAL S	(C-- 11) /	BC11A =	1.2431 LB SULFUR/HR
	TOTAL IN:	(RV-- 10) /	SI10 =	3.5728 LB SULFUR/HR
OUT				
	OUTLET GAS AS SO2	(G-- 13) /	BG13A =	0.1095 LB SULFUR/HR
	OUTLET CARBON	(C-- 12) /	BC12A =	3.2903 LB SULFUR/HR
	CYCLONE DUST	(D-- 11) /	BD11A =	0.0133 LB SULFUR/HR
	COLLECTOR DUST	(D-- 12) /	BD12A =	0.0 LB SULFUR/HR
	CARBON WEEPAGE	(CW-- 12) /	BCW12A =	0.0004 LB SULFUR/HR
	TOTAL OUT:	(RV-- 10) /	SO10 =	3.4135 LB SULFUR/HR

6" DIA CARBON PRECONDITIONER

IN				
	INLET CARBON	(C-- 12) /	BC12A =	3.2903 LB SULFUR/HR
	TOTAL IN:	(RV-300) /	SI300 =	3.2903 LB SULFUR/HR
OUT				
	OUTLET CARBON	(C-201) /	BC201A =	3.2903 LB SULFUR/HR
	CYCLONE DUST	(D-301) /	BD301A =	0.0 LB SULFUR/HR
	TOTAL OUT:	(RV-300) /	SO300 =	3.2903 LB SULFUR/HR

SULFUR GENERATOR

IN				
	INLET GAS AS H2S (CYL)	(G-201) /	BG201B =	0.0 LB SULFUR/HR
	INLET GAS AS H2S (PROC)	(G-201) /	BG203R =	5.3048 LB SULFUR/HR
	INLET CARBON	(C-201) /	BC201A =	3.2903 LB SULFUR/HR
	TOTAL IN:	(RV-200) /	SI200 =	8.5952 LB SULFUR/HR
OUT				
	OUTLET GAS AS H2S	(G-205) /	BG205B =	0.0070 LB SULFUR/HR
	OUTLET GAS AS SO2	(G-205) /	BG205A =	0.2491 LB SULFUR/HR
	OUTLET CARBON	(C-202) /	BC202A =	7.5244 LB SULFUR/HR
	TOTAL OUT:	(RV-200) /	SO200 =	7.7806 LB SULFUR/HR

H2S GENERATOR/SULFUR STRIPPER

IN				
	INLET CARBON	(C-2C2) / BC202A =	7.5244	LB SULFUR/HR
	TOTAL IN:	(RV-1CC) / SI100 =	7.5244	LB SULFUR/HR
CUT				
	OUTLET CARBON	(C-1C3) / BC103A =	1.2431	LB SULFUR/HR
	OUTLET GAS AS H2S	(G-1C4) / BG104B =	5.3048	LB SULFUR/HR
	OUTLET GAS AS S	(G-1C4) / BG104S =	1.7542	LB SULFUR/HR
	CYCLONE DUST	(D-1C1) / BD101A =	0.0000	LB SULFUR/HR
	FILTER DUST	(D-1C2) / BD102A =	0.0	LB SULFUR/HR
	TOTAL OUT:	(RV-1CC) / SO100 =	8.3022	LB SULFUR/HR

OVERALL SULFUR BALANCE

IN				
	INLET GAS 18" UNIT AS SO2	(G- 1C) / BG10A =	2.3297	LB SULFUR/HR
	INLET GAS 8" UNIT AS CYL H2S	(G-2C1) / BG201B =	0.0	LB SULFUR/HR
	TOTAL SULFUR IN:		2.3297	LB SULFUR/HR
CUT				
	OUTLET GAS 18" UNIT AS SO2	(G- 13) / BG13A =	0.1095	LB SULFUR/HR
	CYCLONE DUST 18" UNIT	(D- 11) / BD11A =	0.0133	LB SULFUR/HR
	COLLECTOR DUST 18" UNIT	(D- 12) / BD12A =	0.0	LB SULFUR/HR
	CARBON WEEPAGE 18" UNIT	(CW- 12) / BCW12A =	0.0004	LB SULFUR/HR
	CYCLONE DUST 6" UNIT	(D-3C1) / BD301A =	0.0	LB SULFUR/HR
	OUTLET GAS 8" UNIT AS H2S	(G-2C5) / BG205B =	0.0070	LB SULFUR/HR
	OUTLET GAS 8" UNIT AS SO2	(G-2C5) / BG205A =	0.2491	LB SULFUR/HR
	OUTLET GAS 4" UNIT AS H2S	(G-1C4) / BG104B =	0.0	LB SULFUR/HR
	OUTLET GAS 4" UNIT AS S	(G-1C4) / BG104S =	1.7542	LB SULFUR/HR
	CYCLONE DUST 4" UNIT	(D-1C1) / BD101A =	0.0000	LB SULFUR/HR
	FILTER DUST 4" UNIT	(D-1C2) / BD102A =	0.0	LB SULFUR/HR
	TOTAL SULFUR OUT:		2.1335	LB SULFUR/HR

HYDROGEN MATERIAL BALANCE:

SULFUR GENERATOR

IN			
INLET GAS AS H2	(G-203) / BG203C =	0.0	LB HYDROGEN/HR
INLET GAS AS H2S (CYL)	(G-203) / BG203B =	0.0	LB HYDROGEN/HR
INLET GAS AS H2S (PROC)	(G-203) / BG203 =	0.3315	LB HYDROGEN/HR
INLET GAS AS H2O	(G-203) / BG203D =	0.2616	LB HYDROGEN/HR
INLET CARBON	(C-201) / BC201H =	0.4549	LB HYDROGEN/HR
TOTAL IN:	(RV-200) / HI200 =	1.0480	LB HYDROGEN/HR
OUT			
OUTLET GAS AS H2	(G-205) / BG205C =	0.0	LB HYDROGEN/HR
OUTLET GAS AS H2S	(G-205) / BG205H =	0.0004	LB HYDROGEN/HR
OUTLET GAS AS H2O	(G-205) / BG205D =	0.7123	LB HYDROGEN/HR
OUTLET CARBON	(C-202) / BC202H =	0.1403	LB HYDROGEN/HR
TOTAL OUT:	(RV-200) / HO200 =	0.8530	LB HYDROGEN/HR

H2S GENERATOR/SULFUR STRIPPER

IN			
INLET GAS AS H2	(G-103) / BG103C =	0.4921	LB HYDROGEN/HR
INLET CARBON	(C-202) / BC202H =	0.1403	LB HYDROGEN/HR
TOTAL IN:	(RV-100) / HI100 =	0.6324	LB HYDROGEN/HR
OUT			
OUTLET GAS AS H2	(G-104) / BG104C =	0.0	LB HYDROGEN/HR
OUTLET GAS AS H2S	(G-104) / BG104H =	0.3315	LB HYDROGEN/HR
OUTLET GAS AS H2O	(G-104) / BG104D =	0.2334	LB HYDROGEN/HR
TOTAL OUT:	(RV-100) / HO100 =	0.5649	LB HYDROGEN/HR

APPENDIX A-12-9

EXPERIMENTAL DATA AND RESULTS FOR INTEGRAL RUN IR-2-8 (144 - 148 hours)

STATUS REPORT OF OPERATING CONDITIONS FOR INTEGRATED OPERATION OF SO2 RECOVERY PROCESS

OPERATING PERIOD:

DATE: 4/26/74 TIME OF RECORD: 3:15 HRS TO 7:15 HRS

PROCESS ELAPSED TIME OF PERIOD: START 144.00 HRS / END 148.00 HRS LENGTH OF PERIOD: 4.00 HRS

PROCESS VARIABLES FOR OPERATING PERIOD:

S O 2 S C R B E R

4:39 HRS	145.40 HRS (ET)	SO2 CONC INLET FLUE GAS	(GS- 10) / Y10(1,T)	=	2000.000	PPM (VOLUME)
10:26 HRS	151.20 HRS (ET)	SO2 CONC INLET FLUE GAS	(GS- 10) / Y10(1,T)	=	1975.000	PPM (VOLUME)
	A V E R A G E :	SO2 CONC INLET FLUE GAS	(GS- 10) / AY10A	=	1987.500	PPM (VOLUME)
4:38 HRS	145.40 HRS (ET)	SO2 CONC OUTLET FLUE GAS	(GS- 16) / Y16(1,T)	=	95.000	PPM (VOLUME)
10:45 HRS	151.50 HRS (ET)	SO2 CONC OUTLET FLUE GAS	(GS- 16) / Y16(1,T)	=	92.500	PPM (VOLUME)
	A V E R A G E :	SO2 CONC OUTLET FLUE GAS	(GS- 16) / AY16A	=	93.750	PPM (VOLUME)
3:15 HRS	144.00 HRS (ET)	H2O CONC INLET FLUE GAS	(GS- 10) / Y10(4,T)	=	10.000	% (VOLUME)
7:15 HRS	148.00 HRS (ET)	H2O CONC INLET FLUE GAS	(GS- 10) / Y10(4,T)	=	10.000	% (VOLUME)
	A V E R A G E :	H2O CONC INLET FLUE GAS	(GS- 10) / AY10D	=	10.000	% (VOLUME)
9:15 HRS	150.00 HRS (ET)	ORIFICE PRESSURE DROP	(DP- 10) / DP10(T)	=	2.300	INCHES H2O
	A V E R A G E :	ORIFICE PRESSURE DROP	(DP- 10) / ADP10	=	2.300	INCHES H2O
3:15 HRS	144.00 HRS (ET)	ORIFICE TEMPERATURE	(TL- 10) / TL10(T)	=	315.000	DEG F
5:15 HRS	146.00 HRS (ET)	ORIFICE TEMPERATURE	(TL- 10) / TL10(T)	=	301.000	DEG F
6:15 HRS	147.00 HRS (ET)	ORIFICE TEMPERATURE	(TL- 10) / TL10(T)	=	313.000	DEG F
7:20 HRS	148.10 HRS (ET)	ORIFICE TEMPERATURE	(TL- 10) / TL10(T)	=	308.000	DEG F
	A V E R A G E :	ORIFICE TEMPERATURE	(TL- 10) / ATL10	=	309.250	DEG F
4:15 HRS	145.00 HRS (ET)	WEIGHT CYCLONE DUST	(D- 11) / CD11(T)	=	0.0	LB DUST
12:15 HRS	153.00 HRS (ET)	WEIGHT CYCLONE DUST	(D- 11) / CD11(T)	=	2.000	LB DUST
	T O T A L :	WEIGHT CYCLONE DUST	(D- 11) / WD11	=	2.000	LB DUST
	R A T E :	WEIGHT CYCLONE DUST	(D- 11) / RD11	=	0.250	LB DUST/HR
4:15 HRS	145.00 HRS (ET)	WEIGHT COLLECTOR DUST	(D- 12) / CD12(T)	=	0.0	LB DUST
12:15 HRS	153.00 HRS (ET)	WEIGHT COLLECTOR DUST	(D- 12) / CD12(T)	=	0.0	LB DUST
	T O T A L :	WEIGHT COLLECTOR DUST	(D- 12) / WD12	=	0.0	LB DUST
	R A T E :	WEIGHT COLLECTOR DUST	(D- 12) / RD12	=	0.0	LB DUST/HR
4:15 HRS	145.00 HRS (ET)	WEIGHT CARBON WEEPAGE	(CW- 12) / CW12(T)	=	0.0	LB DUST
12:15 HRS	153.00 HRS (ET)	WEIGHT CARBON WEEPAGE	(CW- 12) / CW12(T)	=	0.630	LB DUST
	T O T A L :	WEIGHT CARBON WEEPAGE	(CW- 12) / WCW12	=	0.630	LB DUST
	R A T E :	WEIGHT CARBON WEEPAGE	(CW- 12) / RCW12	=	0.079	LB DUST/HR
4:15 HRS	145.00 HRS (ET)	% TOT S ON CYCLONE DUST	(D- 11) / D11(1,T)	=	7.640	% (WEIGHT)
12:15 HRS	153.00 HRS (ET)	% TOT S ON CYCLONE DUST	(D- 11) / D11(1,T)	=	7.700	% (WEIGHT)
	A V E R A G E :	% TOT S ON CYCLONE DUST	(D- 11) / AD11A	=	7.670	% (WEIGHT)
4:15 HRS	145.00 HRS (ET)	% TOT S ON COLLECTOR DUST	(D- 12) / D12(1,T)	=	7.640	% (WEIGHT)
12:15 HRS	153.00 HRS (ET)	% TOT S ON COLLECTOR DUST	(D- 12) / D12(1,T)	=	7.700	% (WEIGHT)
	A V E R A G E :	% TOT S ON COLLECTOR DUST	(D- 12) / AD12A	=	7.670	% (WEIGHT)

6" DIA CARBON PRECONDITIONER

6:15 HRS	147.00 HRS (ET)	% TOT S ON INLET CARBON	(CS-301) / Z301(1,T) =	7.860	% (WEIGHT)
10:15 HRS	151.00 HRS (ET)	% TOT S ON INLET CARBON	(CS-301) / Z301(1,T) =	9.080	% (WEIGHT)
	AVERAGE :	% TOT S ON INLET CARBON	(CS-301) / AZ301A =	8.470	% (WEIGHT)
6:15 HRS	147.00 HRS (ET)	% H2O ON INLET CARBON	(CS-301) / Z301(2,T) =	7.000	% (WEIGHT)
	AVERAGE :	% H2O ON INLET CARBON	(CS-301) / AZ301B =	7.000	% (WEIGHT)
4:15 HRS	145.00 HRS (ET)	WEIGHT CYCLONE DUST	(D-301) / CD301(T) =	0.0	LB DUST
12:15 HRS	153.00 HRS (ET)	WEIGHT CYCLONE DUST	(D-301) / CD301(T) =	0.0	LB DUST
	TOTAL :	WEIGHT CYCLONE DUST	(D-301) / WD301 =	0.0	LB DUST
	RATE :	WEIGHT CYCLONE DUST	(D-301) / RD301 =	0.0	LB DUST/HR
3:15 HRS	144.00 HRS (ET)	% TOT S ON CYCLONE DUST	(D-301) / D301(1,T) =	0.0	% (WEIGHT)
7:15 HRS	148.00 HRS (ET)	% TOT S ON CYCLONE DUST	(D-301) / D301(1,T) =	0.0	% (WEIGHT)
	AVERAGE :	% TOT S ON CYCLONE DUST	(D-301) / AD301A =	0.0	% (WEIGHT)

S U L F U R G E N E R A T O R

17:38 HRS	110.40 HRS (ET)	SO2 CONC OUTLET GAS	(GS-206) / Y206(1,T) =	1.400	% (VOLUME)
2:26 HRS	119.20 HRS (ET)	SO2 CONC OUTLET GAS	(GS-206) / Y206(1,T) =	1.210	% (VOLUME)
8: 8 HRS	124.90 HRS (ET)	SO2 CONC OUTLET GAS	(GS-206) / Y206(1,T) =	0.830	% (VOLUME)
	A V E R A G E :	SO2 CONC OUTLET GAS	(GS-206) / AY206A =	1.147	% (VOLUME)
4:26 HRS	97.20 HRS (ET)	H2S CONC INLET GAS	(GS-200) / Y200(2,T) =	26.800	% (VOLUME)
19:26 HRS	112.20 HRS (ET)	H2S CONC INLET GAS	(GS-200) / Y200(2,T) =	25.000	% (VOLUME)
6:32 HRS	123.30 HRS (ET)	H2S CONC INLET GAS	(GS-200) / Y200(2,T) =	21.400	% (VOLUME)
	A V E R A G E :	H2S CONC INLET GAS	(GS-200) / AY200B =	24.400	% (VOLUME)
17:38 HRS	110.40 HRS (ET)	H2S CONC OUTLET GAS	(GS-206) / Y206(2,T) =	0.0	% (VOLUME)
2:26 HRS	119.20 HRS (ET)	H2S CONC OUTLET GAS	(GS-206) / Y206(2,T) =	0.025	% (VOLUME)
8: 8 HRS	124.90 HRS (ET)	H2S CONC OUTLET GAS	(GS-206) / Y206(2,T) =	0.072	% (VOLUME)
	A V E R A G E :	H2S CONC OUTLET GAS	(GS-206) / AY206B =	0.032	% (VOLUME)
4:26 HRS	97.20 HRS (ET)	H2 CONC INLET GAS	(GS-200) / Y200(3,T) =	0.0	% (VOLUME)
19:26 HRS	112.20 HRS (ET)	H2 CONC INLET GAS	(GS-200) / Y200(3,T) =	0.0	% (VOLUME)
6:32 HRS	123.30 HRS (ET)	H2 CONC INLET GAS	(GS-200) / Y200(3,T) =	0.0	% (VOLUME)
	A V E R A G E :	H2 CONC INLET GAS	(GS-200) / AY200C =	0.0	% (VOLUME)
17:38 HRS	110.40 HRS (ET)	H2 CONC OUTLET GAS	(GS-206) / Y206(3,T) =	0.0	% (VOLUME)
2:26 HRS	119.20 HRS (ET)	H2 CONC OUTLET GAS	(GS-206) / Y206(3,T) =	0.0	% (VOLUME)
8: 8 HRS	124.90 HRS (ET)	H2 CONC OUTLET GAS	(GS-206) / Y206(3,T) =	0.0	% (VOLUME)
	A V E R A G E :	H2 CONC OUTLET GAS	(GS-206) / AY206C =	0.0	% (VOLUME)
4:26 HRS	97.20 HRS (ET)	H2O CONC INLET GAS	(GS-200) / Y200(4,T) =	20.000	% (VOLUME)
19:26 HRS	112.20 HRS (ET)	H2O CONC INLET GAS	(GS-200) / Y200(4,T) =	22.300	% (VOLUME)
6:32 HRS	123.30 HRS (ET)	H2O CONC INLET GAS	(GS-200) / Y200(4,T) =	24.100	% (VOLUME)
	A V E R A G E :	H2O CONC INLET GAS	(GS-200) / AY200D =	22.133	% (VOLUME)
17:38 HRS	110.40 HRS (ET)	H2O CONC OUTLET GAS	(GS-206) / Y206(4,T) =	52.600	% (VOLUME)
2:26 HRS	119.20 HRS (ET)	H2O CONC OUTLET GAS	(GS-206) / Y206(4,T) =	51.600	% (VOLUME)
8: 8 HRS	124.90 HRS (ET)	H2O CONC OUTLET GAS	(GS-206) / Y206(4,T) =	53.200	% (VOLUME)
	A V E R A G E :	H2O CONC OUTLET GAS	(GS-206) / AY206D =	52.467	% (VOLUME)
4:26 HRS	97.20 HRS (ET)	N2 CONC INLET GAS	(GS-200) / Y200(5,T) =	52.800	% (VOLUME)
19:26 HRS	112.20 HRS (ET)	N2 CONC INLET GAS	(GS-200) / Y200(5,T) =	52.100	% (VOLUME)
6:32 HRS	123.30 HRS (ET)	N2 CONC INLET GAS	(GS-200) / Y200(5,T) =	54.200	% (VOLUME)
	A V E R A G E :	N2 CONC INLET GAS	(GS-200) / AY200E =	53.033	% (VOLUME)
17:38 HRS	110.40 HRS (ET)	N2 CONC OUTLET GAS	(GS-206) / Y206(5,T) =	45.700	% (VOLUME)
2:26 HRS	119.20 HRS (ET)	N2 CONC OUTLET GAS	(GS-206) / Y206(5,T) =	47.200	% (VOLUME)
8: 8 HRS	124.90 HRS (ET)	N2 CONC OUTLET GAS	(GS-206) / Y206(5,T) =	45.600	% (VOLUME)
	A V E R A G E :	N2 CONC OUTLET GAS	(GS-206) / AY206E =	46.167	% (VOLUME)
3:15 HRS	144.00 HRS (ET)	N2 INLET VOL FLOW RATE	(G-200) / G200(5,T) =	127.000	CFH (70 DEG F)
7:15 HRS	148.00 HRS (ET)	N2 INLET VOL FLOW RATE	(G-200) / G200(5,T) =	127.000	CFH (70 DEG F)
	A V E R A G E :	N2 INLET VOL FLOW RATE	(G-200) / AG200E =	127.000	CFH (70 DEG F)
6:15 HRS	147.00 HRS (ET)	% TOT S ON INLET CARBON	(CS-302) / Z302(1,T) =	7.860	% (WEIGHT)
10:15 HRS	151.00 HRS (ET)	% TOT S ON INLET CARBON	(CS-302) / Z302(1,T) =	9.080	% (WEIGHT)
	A V E R A G E :	% TOT S ON INLET CARBON	(CS-302) / AZ302A =	8.470	% (WEIGHT)
6:15 HRS	147.00 HRS (ET)	% TOT S ON OUTLET CARBON	(CS-200) / Z200(1,T) =	20.200	% (WEIGHT)
10:15 HRS	151.00 HRS (ET)	% TOT S ON OUTLET CARBON	(CS-200) / Z200(1,T) =	21.600	% (WEIGHT)
	A V E R A G E :	% TOT S ON OUTLET CARBON	(CS-200) / AZ200A =	20.900	% (WEIGHT)

6:15 HRS	147.00 HRS (ET)	% H2O ON INLET CARBON	(CS-302) / Z302(2,T) =	7.000 % (WEIGHT)
10:15 HRS	151.00 HRS (ET)	% H2O ON INLET CARBON	(CS-302) / Z302(2,T) =	7.000 % (WEIGHT)
	A V E R A G E :	% H2O ON INLET CARBON	(CS-302) / AZ302B =	7.000 % (WEIGHT)
6:15 HRS	147.00 HRS (ET)	% H2O ON OUTLET CARBON	(CS-200) / Z200(2,T) =	3.200 % (WEIGHT)
10:15 HRS	151.00 HRS (ET)	% H2O ON OUTLET CARBON	(CS-200) / Z200(2,T) =	3.300 % (WEIGHT)
	A V E R A G E :	% H2O ON OUTLET CARBON	(CS-200) / AZ200B =	3.250 % (WEIGHT)
6:15 HRS	147.00 HRS (ET)	% ACID ON OUTLET CARBON	(CS-200) / Z200(3,T) =	1.470 % (WEIGHT)
10:15 HRS	151.00 HRS (ET)	% ACID ON OUTLET CARBON	(CS-200) / Z200(3,T) =	1.860 % (WEIGHT)
	A V E R A G E :	% ACID ON OUTLET CARBON	(CS-200) / AZ200C =	1.665 % (WEIGHT)

H2S GENERATOR/SULFUR STRIPPER

1: 2 HRS	93.80 HRS (ET)	H2 CONC INLET GAS	(GS-100) / Y100(3,T) =	50.600	%	(VOLUME)
21:15 HRS	114.00 HRS (ET)	H2 CONC INLET GAS	(GS-100) / Y100(3,T) =	51.000	%	(VOLUME)
4:45 HRS	121.50 HRS (ET)	H2 CONC INLET GAS	(GS-100) / Y100(3,T) =	50.700	%	(VOLUME)
	AVERAGE :	H2 CONC INLET GAS	(GS-100) / AY100C =	50.767	%	(VOLUME)
6:15 HRS	99.00 HRS (ET)	H2 CONC OUTLET GAS	(GS-108) / Y108(3,T) =	0.0	%	(VOLUME)
23: 2 HRS	115.80 HRS (ET)	H2 CONC OUTLET GAS	(GS-108) / Y108(3,T) =	0.0	%	(VOLUME)
3:50 HRS	120.60 HRS (ET)	H2 CONC OUTLET GAS	(GS-108) / Y108(3,T) =	0.0	%	(VOLUME)
9:26 HRS	126.20 HRS (ET)	H2 CONC OUTLET GAS	(GS-108) / Y108(3,T) =	0.0	%	(VOLUME)
	AVERAGE :	H2 CONC OUTLET GAS	(GS-108) / AY108C =	0.0	%	(VOLUME)
1: 2 HRS	93.80 HRS (ET)	N2 CONC INLET GAS	(GS-100) / Y100(5,T) =	49.400	%	(VOLUME)
21:15 HRS	114.00 HRS (ET)	N2 CONC INLET GAS	(GS-100) / Y100(5,T) =	49.000	%	(VOLUME)
4:45 HRS	121.50 HRS (ET)	N2 CONC INLET GAS	(GS-100) / Y100(5,T) =	49.300	%	(VOLUME)
	AVERAGE :	N2 CONC INLET GAS	(GS-100) / AY100E =	49.233	%	(VOLUME)
6:15 HRS	99.00 HRS (ET)	N2 CONC OUTLET GAS	(GS-108) / Y108(5,T) =	52.200	%	(VOLUME)
23: 2 HRS	115.80 HRS (ET)	N2 CONC OUTLET GAS	(GS-108) / Y108(5,T) =	52.300	%	(VOLUME)
3:50 HRS	120.60 HRS (ET)	N2 CONC OUTLET GAS	(GS-108) / Y108(5,T) =	52.600	%	(VOLUME)
9:26 HRS	126.20 HRS (ET)	N2 CONC OUTLET GAS	(GS-108) / Y108(5,T) =	52.600	%	(VOLUME)
	AVERAGE :	N2 CONC OUTLET GAS	(GS-108) / AY108E =	52.425	%	(VOLUME)
6:15 HRS	99.00 HRS (ET)	H2S CONC OUTLET GAS	(GS-108) / Y108(2,T) =	29.900	%	(VOLUME)
23: 2 HRS	115.80 HRS (ET)	H2S CONC OUTLET GAS	(GS-108) / Y108(2,T) =	27.700	%	(VOLUME)
3:50 HRS	120.60 HRS (ET)	H2S CONC OUTLET GAS	(GS-108) / Y108(2,T) =	26.800	%	(VOLUME)
9:26 HRS	126.20 HRS (ET)	H2S CONC OUTLET GAS	(GS-108) / Y108(2,T) =	26.500	%	(VOLUME)
	AVERAGE :	H2S CONC OUTLET GAS	(GS-108) / AY108B =	27.725	%	(VOLUME)
6:15 HRS	99.00 HRS (ET)	H2O CONC OUTLET GAS	(GS-108) / Y108(4,T) =	17.600	%	(VOLUME)
23: 2 HRS	115.80 HRS (ET)	H2O CONC OUTLET GAS	(GS-108) / Y108(4,T) =	19.700	%	(VOLUME)
3:50 HRS	120.60 HRS (ET)	H2O CONC OUTLET GAS	(GS-108) / Y108(4,T) =	20.200	%	(VOLUME)
9:26 HRS	126.20 HRS (ET)	H2O CONC OUTLET GAS	(GS-108) / Y108(4,T) =	20.600	%	(VOLUME)
	AVERAGE :	H2O CONC OUTLET GAS	(GS-108) / AY108D =	19.525	%	(VOLUME)
3:15 HRS	144.00 HRS (ET)	N2 INLET VOL FLOW RATE	(G-100) / G100(5,T) =	127.000	CFH	(70 DEG F)
7:15 HRS	148.00 HRS (ET)	N2 INLET VOL FLOW RATE	(G-100) / G100(5,T) =	127.000	CFH	(70 DEG F)
	AVERAGE :	N2 INLET VOL FLOW RATE	(G-100) / AG100E =	127.000	CFH	(70 DEG F)
4:15 HRS	145.00 HRS (ET)	WEIGHT CYCLONE DUST	(D-101) / CD101(T) =	0.0	LB	DUST
12:15 HRS	153.00 HRS (ET)	WEIGHT CYCLONE DUST	(D-101) / CD101(T) =	0.0	LB	DUST
	TOTAL :	WEIGHT CYCLONE DUST	(D-101) / WD101 =	0.0	LB	DUST
	RATE :	WEIGHT CYCLONE DUST	(D-101) / RD101 =	0.0	LB	DUST/HR
4:15 HRS	145.00 HRS (ET)	WEIGHT FILTER DUST	(D-102) / CD102(T) =	0.0	LB	DUST
12:15 HRS	153.00 HRS (ET)	WEIGHT FILTER DUST	(D-102) / CD102(T) =	0.0	LB	DUST
	TOTAL :	WEIGHT FILTER DUST	(D-102) / WD102 =	0.0	LB	DUST
	RATE :	WEIGHT FILTER DUST	(D-102) / RD102 =	0.0	LB	DUST/HR
6:15 HRS	147.00 HRS (ET)	% TOT S ON CYCLONE DUST	(D-101) / D101(1,T) =	3.860	%	(WEIGHT)
10:15 HRS	151.00 HRS (ET)	% TOT S ON CYCLONE DUST	(D-101) / D101(1,T) =	3.800	%	(WEIGHT)
	AVERAGE :	% TOT S ON CYCLONE DUST	(D-101) / AD101A =	3.830	%	(WEIGHT)
3:15 HRS	144.00 HRS (ET)	% TOT S ON FILTER DUST	(D-102) / D102(1,T) =	0.0	%	(WEIGHT)
7:15 HRS	148.00 HRS (ET)	% TOT S ON FILTER DUST	(D-102) / D102(1,T) =	0.0	%	(WEIGHT)
	AVERAGE :	% TOT S ON FILTER DUST	(D-102) / AD102A =	0.0	%	(WEIGHT)

CARBON INVENTORY HOPPER

6:15 HRS	147.00 HRS (ET)	% RESIDUAL S ON CARBON	(CS- 90) /	Z90(1,T) =	3.800 % (WEIGHT)
10:15 HRS	151.00 HRS (ET)	% RESIDUAL S ON CARBON	(CS- 90) /	Z90(1,T) =	3.860 % (WEIGHT)
	AVERAGE :	% RESIDUAL S ON CARBON	(CS- 90) /	AZ90A =	3.830 % (WEIGHT)
6:15 HRS	147.00 HRS (ET)	% RESIDUAL H2O ON CARBON	(CS- 90) /	Z90(2,T) =	2.100 % (WEIGHT)
10:15 HRS	151.00 HRS (ET)	% RESIDUAL H2O ON CARBON	(CS- 90) /	Z90(2,T) =	2.900 % (WEIGHT)
18:15 HRS	159.00 HRS (ET)	% RESIDUAL H2O ON CARBON	(CS- 90) /	Z90(2,T) =	1.700 % (WEIGHT)
	AVERAGE :	% RESIDUAL H2O ON CARBON	(CS- 90) /	AZ90B =	2.233 % (WEIGHT)
3:15 HRS	144.00 HRS (ET)	CARBON RECYCLE RATE	(C- 90) /	C90(1,T) =	31.000 LB MAT'L/HR
7:15 HRS	148.00 HRS (ET)	CARBON RECYCLE RATE	(C- 90) /	C90(1,T) =	31.000 LB MAT'L/HR
	AVERAGE :	CARBON RECYCLE RATE	(C- 90) /	AC90A =	31.000 LB MAT'L/HR

SULFUR CONDENSER

6:15 HRS	147.00 HRS (ET)	WEIGHT SULFUR COLLECTED	(S-401) /	S401(T) =	0.0 LB SULFUR
10:15 HRS	151.00 HRS (ET)	WEIGHT SULFUR COLLECTED	(S-401) /	S401(T) =	6.500 LB SULFUR
	TOTAL :	WEIGHT SULFUR COLLECTED	(S-401) /	WS401 =	6.500 LB SULFUR
	RATE :	WEIGHT SULFUR COLLECTED	(S-401) /	RS401 =	1.625 LB SULFUR/HR

STATUS REPORT OF OPERATING CONDITIONS FOR INTEGRATED OPERATION OF SO2 RECOVERY PROCESS

OPERATING PERIOD:

DATE: 4/26/74 TIME OF RECORD: 3:15 HRS TO 7:15 HRS

PROCESS ELAPSED TIME OF PERIOD: START 144.00 HRS / END 148.00 HRS LENGTH OF PERIOD: 4.00 HRS

SUMMARY OF INTEGRATED PROCESS PERFORMANCE:

1.	SO2 REMOVAL	PRSO2 =	95.28 % (ACTUAL)	90.0 % (GOAL)
2.	H2S UTILIZATION	PUH2S =	99.85 % (ACTUAL)	95.0 % (GOAL)
3.	ACID CONVERSION (TO SULFUR)	PVCS =	77.23 % (ACTUAL)	99.0 % (GOAL)
4.	H2 UTILIZATION (TO H2S)	PHCHS =	70.70 % (ACTUAL)	90.0 % (GOAL)
5.	SULFUR RECOVERY	PRS =	72.88 % (ACTUAL)	100.0 % (GOAL) OF SORBED SO2
			23.36 % (ACTUAL)	25.0 % (GOAL) OF STRIPPED SULFUR
6.	H2 UTILIZATION 4" UNIT	PUH2 =	100.00 %	
7.	RESIDUAL SULFUR ON CARBON	X90A =	0.0406 LB S/LB C	
8.	CARBON RECYCLE RATE (DB)	RC90 =	29.120 LB C(DB)/HR	
9.	ACID LOADING INLET CARBON 6" UNIT	X301C =	0.2294 LB ACID/LB C	
10.	MOISTURE CONTENT INLET CARBON 6" UNIT	X301B =	0.0956 LB H2O/LB C	
11.	ACID LOADING INLET CARBON 8" UNIT	X302C =	0.2294 LB ACID/LB C	
12.	MOISTURE CONTENT INLET CARBON 8" UNIT	X302B =	0.0956 LB H2O/LB C	
13.	TOTAL ACID CONVERTED 8" UNIT	PVC =	90.29 %	
14.	SULFUR CONVERSION (TO H2S)	PSCHS =	80.03 %	
15.	SULFUR CONDENSER EFFICIENCY	ERV400=	116.97 %	

MAJOR EVENTS DURING OPERATING PERIOD:

DURING STANDBY LEAK AT ORIFICE IN
PROCESS H2S LINE FOUND AND REPAIRED
BEFORE RE-START UP.
CORRECTED SCALE OFFSET ON 4" UNIT N2 ROTAMETER
WHICH MEANT PREVIOUS 106 CFH SET PT. GAVE 100 CFH ACTUAL.

STATUS REPORT OF OPERATING CONDITIONS FOR INTEGRATED OPERATION OF SO2 RECOVERY PROCESS

OPERATING PERIOD:

DATE: 4/26/74 TIME OF RECORD: 3:15 HRS TO 7:15 HRS

PROCESS ELAPSED TIME OF PERIOD: START 144.00 HRS / END 148.00 HRS LENGTH OF PERIOD: 4.00 HRS

SULFUR MATERIAL BALANCE (USING PROCESS H2S):

S O 2 S C R B E R

I N			
INLET GAS AS SO2	(G- 13) /	BG10A =	2.3402 LB SULFUR/HR
INLET C AS RESIDUAL S	(C- 11) /	BC11A =	1.1873 LB SULFUR/HR
T O T A L I N :	(RV- 10) /	SI10 =	3.5275 LB SULFUR/HR
O U T			
OUTLET GAS AS SO2	(G- 13) /	BG12A =	0.1104 LB SULFUR/HR
OUTLET CARBON	(C- 12) /	BC12A =	3.3688 LB SULFUR/HR
CYCLONE DUST	(C- 11) /	BC11A =	0.0192 LB SULFUR/HR
COLLECTOR DUST	(D- 12) /	BD12A =	0.0 LB SULFUR/HR
CARBON WEEPAGE	(CW- 12) /	BCW12A =	0.0091 LB SULFUR/HR
T O T A L O U T :	(RV- 10) /	SO10 =	3.5075 LB SULFUR/HR

6" D I A C A R B O N P R E C O N D I T I O N E R

I N			
INLET CARBON	(C- 12) /	BC12A =	3.3688 LB SULFUR/HR
T O T A L I N :	(RV-300) /	SI300 =	3.3688 LB SULFUR/HR
O U T			
OUTLET CARBON	(C-201) /	BC201A =	3.3688 LB SULFUR/HR
CYCLONE DUST	(D-301) /	BD301A =	0.0 LB SULFUR/HR
T O T A L O U T :	(RV-300) /	SO300 =	3.3688 LB SULFUR/HR

S U L F U R G E N E R A T O R

I N			
INLET GAS AS H2S (CYL)	(G-201) /	BG201B =	0.0 LB SULFUR/HR
INLET GAS AS H2S (PROC)	(G-201) /	BG203R =	5.5679 LB SULFUR/HR
INLET CARBON	(C-201) /	BC201A =	3.3688 LB SULFUR/HR
T O T A L I N :	(RV-200) /	SI200 =	8.9367 LB SULFUR/HR
O U T			
OUTLET GAS AS H2S	(G-205) /	BG205B =	0.0074 LB SULFUR/HR
OUTLET GAS AS SO2	(G-205) /	BG205A =	0.2615 LB SULFUR/HR
OUTLET CARBON	(C-202) /	BC202A =	8.1444 LB SULFUR/HR
T O T A L O U T :	(RV-200) /	SO200 =	8.4133 LB SULFUR/HR

H2S GENERATOR/SULFUR STRIPPER

IN				
	INLET CARBON	(C-2C2) / BC202A =	8.1444	LB SULFUR/HR
	TOTAL IN :	(RV-1CC) / SI1CO =	8.1444	LB SULFUR/HR
OUT				
	OUTLET CARBON	(C-1C3) / BC103A =	1.1873	LB SULFUR/HR
	OUTLET GAS AS H2S	(G-1C4) / BG104B =	5.5679	LB SULFUR/HR
	OUTLET GAS AS S	(G-1C4) / BG104S =	1.6250	LB SULFUR/HR
	CYCLONE DUST	(D-1C1) / BD101A =	0.0	LB SULFUR/HR
	FILTER DUST	(D-1C2) / BD102A =	0.0	LB SULFUR/HR
	TOTAL OUT :	(RV-1CC) / SO1CO =	8.3802	LB SULFUR/HR

OVERALL SULFUR BALANCE

IN				
	INLET GAS 18" UNIT AS SO2	(G- 1C) / BG10A =	2.3402	LB SULFUR/HR
	INLET GAS 8" UNIT AS CYL H2S	(G-2C1) / BG201B =	0.0	LB SULFUR/HR
	TOTAL SULFUR IN :		2.3402	LB SULFUR/HR
OUT				
	OUTLET GAS 18" UNIT AS SO2	(G- 13) / BG13A =	0.1104	LB SULFUR/HR
	CYCLONE DUST 18" UNIT	(D- 11) / BD11A =	0.0192	LB SULFUR/HR
	COLLECTOR DUST 18" UNIT	(D- 12) / BD12A =	0.0	LB SULFUR/HR
	CARBON WEEPAGE 18" UNIT	(CW- 12) / BCW12A =	0.0091	LB SULFUR/HR
	CYCLONE DUST 6" UNIT	(D-3C1) / BD301A =	0.0	LB SULFUR/HR
	OUTLET GAS 8" UNIT AS H2S	(G-2C5) / BG205B =	0.0074	LB SULFUR/HR
	OUTLET GAS 8" UNIT AS SO2	(G-2C5) / BG205A =	0.2615	LB SULFUR/HR
	OUTLET GAS 4" UNIT AS H2S	(G-1C4) / BG104B =	0.0	LB SULFUR/HR
	OUTLET GAS 4" UNIT AS S	(G-1C4) / BG104S =	1.6250	LB SULFUR/HR
	CYCLONE DUST 4" UNIT	(D-1C1) / BD101A =	0.0	LB SULFUR/HR
	FILTER DUST 4" UNIT	(D-1C2) / BD102A =	0.0	LB SULFUR/HR
	TOTAL SULFUR OUT :		2.0325	LB SULFUR/HR

HYDROGEN MATERIAL BALANCE:

SULFUR GENERATOR

IN				
	INLET GAS AS H2	(G-2C3) / BG203C =	0.0	LB HYDROGEN/HR
	INLET GAS AS H2S (CYL)	(G-2C3) / BG203B =	0.0	LB HYDROGEN/HR
	INLET GAS AS H2S (PROC)	(G-2C3) / BG203 =	0.3479	LB HYDROGEN/HR
	INLET GAS AS H2O	(G-2C3) / BG203D =	0.2746	LB HYDROGEN/HR
	INLET CARBON	(C-2C1) / BC201H =	0.4457	LB HYDROGEN/HR
	TOTAL IN:	(RV-2CC) / HI200 =	1.0682	LB HYDROGEN/HR
OUT				
	OUTLET GAS AS H2	(G-2C5) / BG205C =	0.0	LB HYDROGEN/HR
	OUTLET GAS AS H2S	(G-2C5) / BG205H =	0.0005	LB HYDROGEN/HR
	OUTLET GAS AS H2O	(G-2C5) / BG205D =	0.7476	LB HYDROGEN/HR
	OUTLET CARBON	(C-2C2) / BC202H =	0.1540	LB HYDROGEN/HR
	TOTAL OUT:	(RV-2CC) / HO200 =	0.9021	LB HYDROGEN/HR

H2S GENERATOR/SULFUR STRIPPER

IN				
	INLET GAS AS H2	(G-1C3) / BG103C =	0.4921	LB HYDROGEN/HR
	INLET CARBON	(C-2C2) / BC202H =	0.1540	LB HYDROGEN/HR
	TOTAL IN:	(RV-1CC) / HI100 =	0.6461	LB HYDROGEN/HR
OUT				
	OUTLET GAS AS H2	(G-1C4) / BG104C =	0.0	LB HYDROGEN/HR
	OUTLET GAS AS H2S	(G-1C4) / BG104H =	0.3479	LB HYDROGEN/HR
	OUTLET GAS AS H2O	(G-1C4) / BG104D =	0.2450	LB HYDROGEN/HR
	TOTAL OUT:	(RV-1CC) / HO100 =	0.5929	LB HYDROGEN/HR

APPENDIX A-12-10

EXPERIMENTAL DATA AND RESULTS FOR INTEGRAL RUN IR-2-8 (148 - 156 hours)

STATUS REPORT OF OPERATING CONDITIONS FOR INTEGRATED OPERATION OF SO2 RECOVERY PROCESS

OPERATING PERIOD:

DATE: 4/26/74 TIME OF RECORD: 7:15 HRS TO 15:15 HRS

PROCESS ELAPSED TIME OF PERIOD: START 148.00 HRS / END 156.00 HRS LENGTH OF PERIOD: 8.00 HRS

PROCESS VARIABLES FOR OPERATING PERIOD:

S O 2 S O R B E R

10:26 HRS	151.20 HRS (ET)	SO2 CONC INLET FLUE GAS	(GS- 10) / Y10(1,T)	=	1975.000 PPM (VOLUME)
14:26 HRS	155.20 HRS (ET)	SO2 CONC INLET FLUE GAS	(GS- 10) / Y10(1,T)	=	2000.000 PPM (VOLUME)
18:15 HRS	159.00 HRS (ET)	SO2 CONC INLET FLUE GAS	(GS- 10) / Y10(1,T)	=	2075.000 PPM (VOLUME)
	A V E R A G E :	SO2 CONC INLET FLUE GAS	(GS- 10) / AY10A	=	2016.667 PPM (VOLUME)
10:45 HRS	151.50 HRS (ET)	SO2 CONC OUTLET FLUE GAS	(GS- 16) / Y16(1,T)	=	92.500 PPM (VOLUME)
14:32 HRS	155.30 HRS (ET)	SO2 CONC OUTLET FLUE GAS	(GS- 16) / Y16(1,T)	=	72.500 PPM (VOLUME)
18:15 HRS	159.00 HRS (ET)	SO2 CONC OUTLET FLUE GAS	(GS- 16) / Y16(1,T)	=	75.000 PPM (VOLUME)
	A V E R A G E :	SO2 CONC OUTLET FLUE GAS	(GS- 16) / AY16A	=	80.000 PPM (VOLUME)
7:15 HRS	148.00 HRS (ET)	H2O CONC INLET FLUE GAS	(GS- 10) / Y10(4,T)	=	10.000 % (VOLUME)
15:15 HRS	156.00 HRS (ET)	H2O CONC INLET FLUE GAS	(GS- 10) / Y10(4,T)	=	10.000 % (VOLUME)
	A V E R A G E :	H2O CONC INLET FLUE GAS	(GS- 10) / AY10C	=	10.000 % (VOLUME)
9:15 HRS	150.00 HRS (ET)	ORIFICE PRESSURE DROP	(DP- 10) / DP10(T)	=	2.300 INCHES H2O
17:15 HRS	158.00 HRS (ET)	ORIFICE PRESSURE DROP	(DP- 10) / DP10(T)	=	2.300 INCHES H2O
	A V E R A G E :	ORIFICE PRESSURE DROP	(DP- 10) / ADP10	=	2.300 INCHES H2O
8:20 HRS	149.10 HRS (ET)	ORIFICE TEMPERATURE	(TL- 10) / TL10(T)	=	304.000 DEG F
10:15 HRS	151.00 HRS (ET)	ORIFICE TEMPERATURE	(TL- 10) / TL10(T)	=	303.000 DEG F
11:15 HRS	152.00 HRS (ET)	ORIFICE TEMPERATURE	(TL- 10) / TL10(T)	=	303.000 DEG F
13:15 HRS	154.00 HRS (ET)	ORIFICE TEMPERATURE	(TL- 10) / TL10(T)	=	303.000 DEG F
15:15 HRS	156.00 HRS (ET)	ORIFICE TEMPERATURE	(TL- 10) / TL10(T)	=	299.000 DEG F
	A V E R A G E :	ORIFICE TEMPERATURE	(TL- 10) / ATL10	=	302.400 DEG F
12:15 HRS	153.00 HRS (ET)	WEIGHT CYCLONE DUST	(D- 11) / CD11(T)	=	0.0 LB DUST
20:15 HRS	161.00 HRS (ET)	WEIGHT CYCLONE DUST	(D- 11) / CD11(T)	=	1.250 LB DUST
	T O T A L :	WEIGHT CYCLONE DUST	(D- 11) / WD11	=	1.250 LB DUST
	R A T E :	WEIGHT CYCLONE DUST	(D- 11) / RD11	=	0.156 LB DUST/HR
12:15 HRS	153.00 HRS (ET)	WEIGHT COLLECTOR DUST	(D- 12) / CD12(T)	=	0.0 LB DUST
20:15 HRS	161.00 HRS (ET)	WEIGHT COLLECTOR DUST	(D- 12) / CD12(T)	=	0.0 LB DUST
	T O T A L :	WEIGHT COLLECTOR DUST	(D- 12) / WD12	=	0.0 LB DUST
	R A T E :	WEIGHT COLLECTOR DUST	(D- 12) / RD12	=	0.0 LB DUST/HR
12:15 HRS	153.00 HRS (ET)	WEIGHT CARBON WEEPAGE	(CW- 12) / CW12(T)	=	0.0 LB DUST
20:15 HRS	161.00 HRS (ET)	WEIGHT CARBON WEEPAGE	(CW- 12) / CW12(T)	=	1.500 LB DUST
	T O T A L :	WEIGHT CARBON WEEPAGE	(CW- 12) / WCW12	=	1.500 LB DUST
	R A T E :	WEIGHT CARBON WEEPAGE	(CW- 12) / RCW12	=	0.188 LB DUST/HR
4:15 HRS	145.00 HRS (ET)	% TOT S ON CYCLONE DUST	(D- 11) / D11(1,T)	=	7.640 % (WEIGHT)
12:15 HRS	153.00 HRS (ET)	% TOT S ON CYCLONE DUST	(D- 11) / D11(1,T)	=	7.700 % (WEIGHT)
20:15 HRS	161.00 HRS (ET)	% TOT S ON CYCLONE DUST	(D- 11) / D11(1,T)	=	7.760 % (WEIGHT)

A V E R A G E :		% TOT S ON CYCLONE DUST	(D- 11) /	AD11A	=	7.700 % (WEIGHT)
4:15 HRS	145.00 HRS (ET)	% TOT S ON COLLECTOR DUST	(D- 12) /	D12(1,T)	=	7.640 % (WEIGHT)
12:15 HRS	153.00 HRS (ET)	% TOT S ON COLLECTOR DUST	(D- 12) /	D12(1,T)	=	7.700 % (WEIGHT)
20:15 HRS	161.00 HRS (ET)	% TOT S ON COLLECTOR DUST	(D- 12) /	D12(1,T)	=	7.760 % (WEIGHT)
A V E R A G E :		% TOT S ON COLLECTOR DUST	(D- 12) /	AD12A	=	7.700 % (WEIGHT)

6" DIA CARBON PRECONDITIONER

10:15 HRS	151.00 HRS (ET)	% TOT S ON INLET CARBON	(CS-301) / Z301(1,T) =	9.080	% (WEIGHT)
14:15 HRS	155.00 HRS (ET)	% TOT S ON INLET CARBON	(CS-301) / Z301(1,T) =	9.860	% (WEIGHT)
	A V E R A G E :	% TOT S ON INLET CARBON	(CS-301) / AZ301A =	9.470	% (WEIGHT)
10:15 HRS	151.00 HRS (ET)	% H2O ON INLET CARBON	(CS-301) / Z301(2,T) =	7.000	% (WEIGHT)
14:15 HRS	155.00 HRS (ET)	% H2O ON INLET CARBON	(CS-301) / Z301(2,T) =	7.000	% (WEIGHT)
18:15 HRS	159.00 HRS (ET)	% H2O ON INLET CARBON	(CS-301) / Z301(2,T) =	5.600	% (WEIGHT)
	A V E R A G E :	% H2O ON INLET CARBON	(CS-301) / AZ301B =	6.533	% (WEIGHT)
12:15 HRS	153.00 HRS (ET)	WEIGHT CYCLONE DUST	(D-301) / CD301(T) =	0.0	LB DUST
20:15 HRS	161.00 HRS (ET)	WEIGHT CYCLONE DUST	(D-301) / CD301(T) =	0.0	LB DUST
	T O T A L :	WEIGHT CYCLONE DUST	(D-301) / WD301 =	0.0	LB DUST
	R A T E :	WEIGHT CYCLONE DUST	(D-301) / RD301 =	0.0	LB DUST/HR
7:15 HRS	148.00 HRS (ET)	% TOT S ON CYCLONE DUST	(D-301) / D301(1,T) =	0.0	% (WEIGHT)
15:15 HRS	156.00 HRS (ET)	% TOT S ON CYCLONE DUST	(D-301) / D301(1,T) =	0.0	% (WEIGHT)
	A V E R A G E :	% TOT S ON CYCLONE DUST	(D-301) / AD301A =	0.0	% (WEIGHT)

S U L F U R G E N E R A T O R

13:32 HRS	154.30 HRS (ET)	SO2 CONC OUTLET GAS	(GS-206) / Y206(1,T) =	1.700	% (VOLUME)
	A V E R A G E :	SO2 CONC OUTLET GAS	(GS-206) / AY206A =	1.700	% (VOLUME)
14:56 HRS	155.70 HRS (ET)	H2S CONC INLET GAS	(GS-200) / Y200(2,T) =	23.400	% (VOLUME)
	A V E R A G E :	H2S CONC INLET GAS	(GS-200) / AY200B =	23.400	% (VOLUME)
13:32 HRS	154.30 HRS (ET)	H2S CONC OUTLET GAS	(GS-206) / Y206(2,T) =	0.500	% (VOLUME)
	A V E R A G E :	H2S CONC OUTLET GAS	(GS-206) / AY206B =	0.500	% (VOLUME)
14:56 HRS	155.70 HRS (ET)	H2 CONC INLET GAS	(GS-200) / Y200(3,T) =	0.0	% (VOLUME)
	A V E R A G E :	H2 CONC INLET GAS	(GS-200) / AY200C =	0.0	% (VOLUME)
13:32 HRS	154.30 HRS (ET)	H2 CONC OUTLET GAS	(GS-206) / Y206(3,T) =	0.0	% (VOLUME)
	A V E R A G E :	H2 CONC OUTLET GAS	(GS-206) / AY206C =	0.0	% (VOLUME)
14:56 HRS	155.70 HRS (ET)	H2O CONC INLET GAS	(GS-200) / Y200(4,T) =	27.900	% (VOLUME)
	A V E R A G E :	H2O CONC INLET GAS	(GS-200) / AY200D =	27.900	% (VOLUME)
13:32 HRS	154.30 HRS (ET)	H2O CONC OUTLET GAS	(GS-206) / Y206(4,T) =	49.200	% (VOLUME)
	A V E R A G E :	H2O CONC OUTLET GAS	(GS-206) / AY206D =	49.200	% (VOLUME)
14:56 HRS	155.70 HRS (ET)	N2 CONC INLET GAS	(GS-200) / Y200(5,T) =	35.000	% (VOLUME)
	A V E R A G E :	N2 CONC INLET GAS	(GS-200) / AY200E =	35.000	% (VOLUME)
13:32 HRS	154.30 HRS (ET)	N2 CONC OUTLET GAS	(GS-206) / Y206(5,T) =	34.000	% (VOLUME)
	A V E R A G E :	N2 CONC OUTLET GAS	(GS-206) / AY206E =	34.000	% (VOLUME)
7:15 HRS	148.00 HRS (ET)	N2 INLET VOL FLOW RATE	(G-200) / G200(5,T) =	87.000	CFH (70 DEG F)
15:15 HRS	156.00 HRS (ET)	N2 INLET VOL FLOW RATE	(G-200) / G200(5,T) =	87.000	CFH (70 DEG F)
	A V E R A G E :	N2 INLET VOL FLOW RATE	(G-200) / AG200E =	87.000	CFH (70 DEG F)
10:15 HRS	151.00 HRS (ET)	% TOT S ON INLET CARBON	(CS-302) / Z302(1,T) =	9.080	% (WEIGHT)
14:15 HRS	155.00 HRS (ET)	% TOT S ON INLET CARBON	(CS-302) / Z302(1,T) =	9.860	% (WEIGHT)
	A V E R A G E :	% TOT S ON INLET CARBON	(CS-302) / AZ302A =	9.470	% (WEIGHT)
10:15 HRS	151.00 HRS (ET)	% TOT S ON OUTLET CARBON	(CS-200) / Z200(1,T) =	21.600	% (WEIGHT)
14:15 HRS	155.00 HRS (ET)	% TOT S ON OUTLET CARBON	(CS-200) / Z200(1,T) =	20.500	% (WEIGHT)
18:15 HRS	159.00 HRS (ET)	% TOT S ON OUTLET CARBON	(CS-200) / Z200(1,T) =	19.000	% (WEIGHT)
	A V E R A G E :	% TOT S ON OUTLET CARBON	(CS-200) / AZ200A =	20.367	% (WEIGHT)
10:15 HRS	151.00 HRS (ET)	% H2O ON INLET CARBON	(CS-302) / Z302(2,T) =	7.000	% (WEIGHT)
14:15 HRS	155.00 HRS (ET)	% H2O ON INLET CARBON	(CS-302) / Z302(2,T) =	7.000	% (WEIGHT)
18:15 HRS	159.00 HRS (ET)	% H2O ON INLET CARBON	(CS-302) / Z302(2,T) =	5.600	% (WEIGHT)
	A V E R A G E :	% H2O ON INLET CARBON	(CS-302) / AZ302B =	6.533	% (WEIGHT)
10:15 HRS	151.00 HRS (ET)	% H2O ON OUTLET CARBON	(CS-200) / Z200(2,T) =	3.100	% (WEIGHT)
14:15 HRS	155.00 HRS (ET)	% H2O ON OUTLET CARBON	(CS-200) / Z200(2,T) =	3.200	% (WEIGHT)
18:15 HRS	159.00 HRS (ET)	% H2O ON OUTLET CARBON	(CS-200) / Z200(2,T) =	3.300	% (WEIGHT)
	A V E R A G E :	% H2O ON OUTLET CARBON	(CS-200) / AZ200B =	3.200	% (WEIGHT)
10:15 HRS	151.00 HRS (ET)	% ACID ON OUTLET CARBON	(CS-200) / Z200(3,T) =	1.860	% (WEIGHT)
14:15 HRS	155.00 HRS (ET)	% ACID ON OUTLET CARBON	(CS-200) / Z200(3,T) =	2.940	% (WEIGHT)
18:15 HRS	159.00 HRS (ET)	% ACID ON OUTLET CARBON	(CS-200) / Z200(3,T) =	4.510	% (WEIGHT)
	A V E R A G E :	% ACID ON OUTLET CARBON	(CS-200) / AZ200C =	3.103	% (WEIGHT)

H2S GENERATOR/SULFUR STRIPPER

7:15 HRS	148.00 HRS (ET)	H2 CONC INLET GAS	(GS-100) /	Y100(3,T) =	47.300	% (VOLUME)
	A V E R A G E :	H2 CONC INLET GAS	(GS-100) /	AY100C =	47.300	% (VOLUME)
8: 8 HRS	148.90 HRS (ET)	H2 CONC OUTLET GAS	(GS-108) /	Y108(3,T) =	0.0	% (VOLUME)
12: 8 HRS	152.90 HRS (ET)	H2 CONC OUTLET GAS	(GS-108) /	Y108(3,T) =	0.0	% (VOLUME)
14:32 HRS	155.30 HRS (ET)	H2 CONC OUTLET GAS	(GS-108) /	Y108(3,T) =	0.0	% (VOLUME)
	A V E R A G E :	H2 CONC OUTLET GAS	(GS-108) /	AY108C =	0.0	% (VOLUME)
7:15 HRS	148.00 HRS (ET)	N2 CONC INLET GAS	(GS-100) /	Y100(5,T) =	32.800	% (VOLUME)
	A V E R A G E :	N2 CONC INLET GAS	(GS-100) /	AY100E =	32.800	% (VOLUME)
8: 8 HRS	148.90 HRS (ET)	N2 CONC OUTLET GAS	(GS-108) /	Y108(5,T) =	37.500	% (VOLUME)
12: 8 HRS	152.90 HRS (ET)	N2 CONC OUTLET GAS	(GS-108) /	Y108(5,T) =	40.600	% (VOLUME)
14:32 HRS	155.30 HRS (ET)	N2 CONC OUTLET GAS	(GS-108) /	Y108(5,T) =	38.500	% (VOLUME)
	A V E R A G E :	N2 CONC OUTLET GAS	(GS-108) /	AY108E =	39.000	% (VOLUME)
8: 8 HRS	148.90 HRS (ET)	H2S CONC OUTLET GAS	(GS-108) /	Y108(2,T) =	28.500	% (VOLUME)
12: 8 HRS	152.90 HRS (ET)	H2S CONC OUTLET GAS	(GS-108) /	Y108(2,T) =	24.600	% (VOLUME)
14:32 HRS	155.30 HRS (ET)	H2S CONC OUTLET GAS	(GS-108) /	Y108(2,T) =	24.700	% (VOLUME)
	A V E R A G E :	H2S CONC OUTLET GAS	(GS-108) /	AY108B =	25.933	% (VOLUME)
8: 8 HRS	148.90 HRS (ET)	H2O CONC OUTLET GAS	(GS-108) /	Y108(4,T) =	16.300	% (VOLUME)
12: 8 HRS	152.90 HRS (ET)	H2O CONC OUTLET GAS	(GS-108) /	Y108(4,T) =	22.200	% (VOLUME)
14:32 HRS	155.30 HRS (ET)	H2O CONC OUTLET GAS	(GS-108) /	Y108(4,T) =	22.300	% (VOLUME)
	A V E R A G E :	H2O CONC OUTLET GAS	(GS-108) /	AY108D =	20.267	% (VOLUME)
7:15 HRS	148.00 HRS (ET)	N2 INLET VOL FLOW RATE	(G-100) /	G100(5,T) =	87.000	CFH (70 DEG F)
15:15 HRS	156.00 HRS (ET)	N2 INLET VOL FLOW RATE	(G-100) /	G100(5,T) =	87.000	CFH (70 DEG F)
	A V E R A G E :	N2 INLET VOL FLOW RATE	(G-100) /	AG100E =	87.000	CFH (70 DEG F)
12:15 HRS	153.00 HRS (ET)	WEIGHT CYCLONE DUST	(D-101) /	CD101(T) =	0.0	LB DUST
20:15 HRS	161.00 HRS (ET)	WEIGHT CYCLONE DUST	(D-101) /	CD101(T) =	0.0	LB DUST
	T O T A L :	WEIGHT CYCLONE DUST	(D-101) /	WD101 =	0.0	LB DUST
	R A T E :	WEIGHT CYCLONE DUST	(D-101) /	RD101 =	0.0	LB DUST/HR
12:15 HRS	153.00 HRS (ET)	WEIGHT FILTER DUST	(D-102) /	CD102(T) =	0.0	LB DUST
20:15 HRS	161.00 HRS (ET)	WEIGHT FILTER DUST	(D-102) /	CD102(T) =	0.0	LB DUST
	T O T A L :	WEIGHT FILTER DUST	(D-102) /	WD102 =	0.0	LB DUST
	R A T E :	WEIGHT FILTER DUST	(D-102) /	RD102 =	0.0	LB DUST/HR
10:15 HRS	151.00 HRS (ET)	% TOT S ON CYCLONE DUST	(D-101) /	D101(1,T) =	3.800	% (WEIGHT)
14:15 HRS	155.00 HRS (ET)	% TOT S ON CYCLONE DUST	(D-101) /	D101(1,T) =	4.660	% (WEIGHT)
18:15 HRS	159.00 HRS (ET)	% TOT S ON CYCLONE DUST	(D-101) /	D101(1,T) =	4.620	% (WEIGHT)
	A V E R A G E :	% TOT S ON CYCLONE DUST	(D-101) /	AD101A =	4.360	% (WEIGHT)
7:15 HRS	148.00 HRS (ET)	% TOT S ON FILTER DUST	(D-102) /	D102(1,T) =	0.0	% (WEIGHT)
15:15 HRS	156.00 HRS (ET)	% TOT S ON FILTER DUST	(D-102) /	D102(1,T) =	0.0	% (WEIGHT)
	A V E R A G E :	% TOT S ON FILTER DUST	(D-102) /	AD102A =	0.0	% (WEIGHT)

C A R B O N I N V E N T O R Y H O P P E R

10:15 HRS	151.00 HRS (ET)	% RESIDUAL S ON CARBON	(CS- 90) /	Z90(1,T) =	3.800	% (WEIGHT)
14:15 HRS	155.00 HRS (ET)	% RESIDUAL S ON CARBON	(CS- 90) /	Z90(1,T) =	4.660	% (WEIGHT)
18:15 HRS	159.00 HRS (ET)	% RESIDUAL S ON CARBON	(CS- 90) /	Z90(1,T) =	4.620	% (WEIGHT)
	A V E R A G E :	% RESIDUAL S ON CARBON	(CS- 90) /	AZ90A =	4.260	% (WEIGHT)
10:15 HRS	151.00 HRS (ET)	% RESIDUAL H2O ON CARBON	(CS- 90) /	Z90(2,T) =	2.230	% (WEIGHT)
14:15 HRS	155.00 HRS (ET)	% RESIDUAL H2O ON CARBON	(CS- 90) /	Z90(2,T) =	2.230	% (WEIGHT)
18:15 HRS	159.00 HRS (ET)	% RESIDUAL H2O ON CARBON	(CS- 90) /	Z90(2,T) =	2.230	% (WEIGHT)
	A V E R A G E :	% RESIDUAL H2O ON CARBON	(CS- 90) /	AZ90B =	2.230	% (WEIGHT)
7:15 HRS	148.00 HRS (ET)	CARBON RECYCLE RATE	(C- 90) /	C90(1,T) =	31.000	LB MAT'L/HR
15:15 HRS	156.00 HRS (ET)	CARBON RECYCLE RATE	(C- 90) /	C90(1,T) =	31.000	LB MAT'L/HR
	A V E R A G E :	CARBON RECYCLE RATE	(C- 90) /	AC90A =	31.000	LB MAT'L/HR

S U L F U R C O N D E N S E R

10:15 HRS	151.00 HRS (ET)	WEIGHT SULFUR COLLECTED	(S-401) /	S401(T) =	0.0	LB SULFUR
14:15 HRS	155.00 HRS (ET)	WEIGHT SULFUR COLLECTED	(S-401) /	S401(T) =	3.700	LB SULFUR
15:15 HRS	156.00 HRS (ET)	WEIGHT SULFUR COLLECTED	(S-401) /	S401(T) =	18.500	LB SULFUR
20:20 HRS	161.10 HRS (ET)	WEIGHT SULFUR COLLECTED	(S-401) /	S401(T) =	4.200	LB SULFUR
0:15 HRS	165.00 HRS (ET)	WEIGHT SULFUR COLLECTED	(S-401) /	S401(T) =	5.000	LB SULFUR
3:15 HRS	168.00 HRS (ET)	WEIGHT SULFUR COLLECTED	(S-401) /	S401(T) =	3.000	LB SULFUR
	T O T A L :	WEIGHT SULFUR COLLECTED	(S-401) /	WS401 =	34.400	LB SULFUR
	R A T E :	WEIGHT SULFUR COLLECTED	(S-401) /	RS401 =	2.024	LB SULFUR/HR

STATUS REPORT OF OPERATING CONDITIONS FOR INTEGRATED OPERATION OF SO2 RECOVERY PROCESS

OPERATING PERIOD:

DATE: 4/26/74 TIME OF RECORD: 7:15 HRS TO 15:15 HRS

PROCESS ELAPSED TIME OF PERIOD: START 148.00 HRS / END 156.00 HRS LENGTH OF PERIOD: 8.00 HRS

SUMMARY OF INTEGRATED PROCESS PERFORMANCE:

1.	SO2 REMOVAL	PRSO2 =	96.03 % (ACTUAL)	90.0 % (GOAL)
2.	H2S UTILIZATION	PUH2S =	97.80 % (ACTUAL)	95.0 % (GOAL)
3.	ACID CONVERSION (TO SULFUR)	PVCS =	91.99 % (ACTUAL)	95.0 % (GOAL)
4.	H2 UTILIZATION (TO H2S)	PHCHS =	90.90 % (ACTUAL)	90.0 % (GOAL)
5.	SULFUR RECOVERY	PRS =	88.34 % (ACTUAL)	100.0 % (GOAL) OF SORBED SO2
			30.75 % (ACTUAL)	25.0 % (GOAL) OF STRIPPED SULFUR
6.	H2 UTILIZATION 4" UNIT	PUH2 =	100.00 %	
7.	RESIDUAL SULFUR ON CARBON	X90A =	0.0467 LB S/LB C	
8.	CARBON RECYCLE RATE (DB)	RC90 =	28.957 LB C(DB)/HR	
9.	ACID LOADING INLET CARBON 6" UNIT	X301C =	0.2637 LB ACID/LB C	
10.	MOISTURE CONTENT INLET CARBON 6" UNIT	X301B =	0.0916 LB H2O/LB C	
11.	ACID LOADING INLET CARBON 8" UNIT	X302C =	0.2637 LB ACID/LB C	
12.	MOISTURE CONTENT INLET CARBON 8" UNIT	X302B =	0.0916 LB H2O/LB C	
13.	TOTAL ACID CONVERTED 8" UNIT	PVC =	84.17 %	
14.	SULFUR CONVERSION (TO H2S)	PSCHS =	72.87 %	
15.	SULFUR CONDENSER EFFICIENCY	ERV400=	113.32 %	

MAJOR EVENTS DURING OPERATING PERIOD:

CUT ON CO2 TO 40 CFH IN 4" UNIT AND
REDUCED N2 TO 66 CFH AT 148.1 HRS.
ATTEMPT TO TURN STEAM ON TO 4" UNIT AT
150.3 HRS. UNSUCCESSFUL DUE TO LIQUID H2O IN
STEAM LINE. BLEW SULFUR FROM RECIRCULATION POT TO OVERFLOW POT

STATUS REPORT OF OPERATING CONDITIONS FOR INTEGRATED OPERATION OF SO2 RECOVERY PROCESS

OPERATING PERIOD:

DATE: 4/26/74 TIME OF RECORD: 7:15 HRS TO 15:15 HRS

PROCESS ELAPSED TIME OF PERIOD: START 148.00 HRS / END 156.00 HRS LENGTH OF PERIOD: 8.00 HRS

SULFUR MATERIAL BALANCE (USING PROCESS H2S):

S O 2 S C R B E R

I N

INLET GAS AS SO2	(G- 13) /	BG10A =	2.3852 LB SULFUR/HR
INLET C AS RESIDUAL S	(G- 11) /	BC11A =	1.3516 LB SULFUR/HR
T O T A L I N :	(RV- 10) /	SI10 =	3.7368 LB SULFUR/HR

O U T

OUTLET GAS AS SO2	(G- 13) /	BG13A =	0.0946 LB SULFUR/HR
OUTLET CARBON	(G- 12) /	BC12A =	3.8444 LB SULFUR/HR
CYCLONE DUST	(D- 11) /	BD11A =	0.0120 LB SULFUR/HR
COLLECTOR DUST	(D- 12) /	BD12A =	0.0 LB SULFUR/HR
CARBON WEEPAGE	(CW- 12) /	BCW12A =	0.0249 LB SULFUR/HR
T O T A L O U T :	(RV- 10) /	SO10 =	3.9760 LB SULFUR/HR

6" D I A C A R B O N P R E C O N D I T I O N E R

I N

INLET CARBON	(C- 12) /	BC12A =	3.8444 LB SULFUR/HR
T O T A L I N :	(RV-300) /	SI300 =	3.8444 LB SULFUR/HR

O U T

OUTLET CARBON	(C-301) /	BC301A =	3.8444 LB SULFUR/HR
CYCLONE DUST	(D-301) /	BD301A =	0.0 LB SULFUR/HR
T O T A L O U T :	(RV-300) /	SO300 =	3.8444 LB SULFUR/HR

S U L F U R G E N E R A T O R

I N

INLET GAS AS H2S (CYL)	(G-201) /	BG201B =	0.0261 LB SULFUR/HR
INLET GAS AS H2S (PROC)	(G-201) /	BG203R =	4.7959 LB SULFUR/HR
INLET CARBON	(C-201) /	BC201A =	3.8444 LB SULFUR/HR
T O T A L I N :	(RV-200) /	SI200 =	8.6664 LB SULFUR/HR

O U T

OUTLET GAS AS H2S	(G-205) /	BG205B =	0.1061 LB SULFUR/HR
OUTLET GAS AS SO2	(G-205) /	BG205A =	0.3606 LB SULFUR/HR
OUTLET CARBON	(C-202) /	BC202A =	7.9331 LB SULFUR/HR
T O T A L O U T :	(RV-200) /	SO200 =	8.3998 LB SULFUR/HR

H2S GENERATOR/SULFUR STRIPPER

IN

INLET CARBON	(C-202) / BC202A =	7.9331	LB SULFUR/HR
TOTAL IN:	(RV-100) / SI100 =	7.9331	LB SULFUR/HR

OUT

OUTLET CARBON	(C-103) / BC103A =	1.3516	LB SULFUR/HR
OUTLET GAS AS H2S	(G-104) / BG104B =	4.7959	LB SULFUR/HR
OUTLET GAS AS S	(G-104) / BG104S =	2.0235	LB SULFUR/HR
CYCLONE DUST	(D-101) / BD101A =	0.0	LB SULFUR/HR
FILTER DUST	(D-102) / BD102A =	0.0	LB SULFUR/HR
TOTAL OUT:	(RV-100) / SO100 =	8.1710	LB SULFUR/HR

OVERALL SULFUR BALANCE

IN

INLET GAS 18" UNIT AS SO2	(G- 10) / BG10A =	2.3852	LB SULFUR/HR
INLET GAS 8" UNIT AS CYL H2S	(G-201) / BG201B =	0.0261	LB SULFUR/HR
TOTAL SULFUR IN:		2.4112	LB SULFUR/HR

OUT

OUTLET GAS 18" UNIT AS SO2	(G- 13) / BG13A =	0.0946	LB SULFUR/HR
CYCLONE DUST 18" UNIT	(D- 11) / BD11A =	0.0120	LB SULFUR/HR
COLLECTOR DUST 18" UNIT	(D- 12) / BD12A =	0.0	LB SULFUR/HR
CARBON WEEPAGE 18" UNIT	(CW- 12) / BCW12A =	0.0249	LB SULFUR/HR
CYCLONE DUST 6" UNIT	(D-301) / BD301A =	0.0	LB SULFUR/HR
OUTLET GAS 8" UNIT AS H2S	(G-205) / BG205B =	0.1061	LB SULFUR/HR
OUTLET GAS 8" UNIT AS SO2	(G-205) / BG205A =	0.3606	LB SULFUR/HR
OUTLET GAS 4" UNIT AS H2S	(G-104) / BG104B =	0.0	LB SULFUR/HR
OUTLET GAS 4" UNIT AS S	(G-104) / BG104S =	2.0235	LB SULFUR/HR
CYCLONE DUST 4" UNIT	(D-101) / BD101A =	0.0	LB SULFUR/HR
FILTER DUST 4" UNIT	(D-102) / BD102A =	0.0	LB SULFUR/HR
TOTAL SULFUR OUT:		2.6217	LB SULFUR/HR

HYDROGEN MATERIAL BALANCE:

SULFUR GENERATOR

IN

INLET GAS AS H2	(G-203) / BG203C =	0.0	LB HYDROGEN/HR
INLET GAS AS H2S (CYL)	(G-203) / BG203B =	0.0016	LB HYDROGEN/HR
INLET GAS AS H2S (PROC)	(G-203) / BG203 =	0.2997	LB HYDROGEN/HR
INLET GAS AS H2O	(G-203) / BG203D =	0.3592	LB HYDROGEN/HR
INLET CARBON	(C-201) / BC201H =	0.4505	LB HYDROGEN/HR
TOTAL IN:	(RW-200) / HI200 =	1.1111	LB HYDROGEN/HR

OUT

OUTLET GAS AS H2	(G-205) / BG205C =	0.0	LB HYDROGEN/HR
OUTLET GAS AS H2S	(G-205) / BG205B =	0.0066	LB HYDROGEN/HR
OUTLET GAS AS H2O	(G-205) / BG205D =	0.6521	LB HYDROGEN/HR
OUTLET CARBON	(C-202) / BC202H =	0.1632	LB HYDROGEN/HR
TOTAL OUT:	(RW-200) / HO200 =	0.8219	LB HYDROGEN/HR

H2S GENERATOR/SULFUR STRIPPER

IN

INLET GAS AS H2	(G-103) / BG103C =	0.4921	LB HYDROGEN/HR
INLET CARBON	(C-202) / BC202H =	0.1632	LB HYDROGEN/HR
TOTAL IN:	(RW-100) / HI100 =	0.6553	LB HYDROGEN/HR

OUT

OUTLET GAS AS H2	(G-104) / BG104C =	0.0	LB HYDROGEN/HR
OUTLET GAS AS H2S	(G-104) / BG104B =	0.2997	LB HYDROGEN/HR
OUTLET GAS AS H2O	(G-104) / BG104D =	0.2342	LB HYDROGEN/HR
TOTAL OUT:	(RW-100) / HO100 =	0.5339	LB HYDROGEN/HR

APPENDIX A-12-11

EXPERIMENTAL DATA AND RESULTS FOR INTEGRAL RUN IR-2-8 (156 - 168 hours)

STATUS REPORT OF OPERATING CONDITIONS FOR INTEGRATED OPERATION OF SO2 RECOVERY PROCESS

OPERATING PERIOD:

DATE: 4/26/74 TIME OF RECORD: 15:15 HRS TO 24: 0 HRS
DATE: 4/27/74 TIME OF RECORD: 0: 0 HRS TO 3:15 HRS

PROCESS ELAPSED TIME OF PERIOD: START 159.00 HRS / END 168.00 HRS LENGTH OF PERIOD: 12.00 HRS

PROCESS VARIABLES FOR OPERATING PERIOD:

S O 2 S O R B E R

18:15 HRS	159.00 HRS (ET)	SO2 CONC INLET FLUE GAS	(GS- 10) / Y10(1,T)	=	2075.000	PPM (VOLUME)
22:15 HRS	163.00 HRS (ET)	SO2 CONC INLET FLUE GAS	(GS- 10) / Y10(1,T)	=	2075.000	PPM (VOLUME)
2:15 HRS	167.00 HRS (ET)	SO2 CONC INLET FLUE GAS	(GS- 10) / Y10(1,T)	=	2025.000	PPM (VOLUME)
	A V E R A G E :	SO2 CONC INLET FLUE GAS	(GS- 10) / AY10A	=	2058.333	PPM (VOLUME)
18:15 HRS	159.00 HRS (ET)	SO2 CONC OUTLET FLUE GAS	(GS- 16) / Y16(1,T)	=	75.000	PPM (VOLUME)
22:15 HRS	163.00 HRS (ET)	SO2 CONC OUTLET FLUE GAS	(GS- 16) / Y16(1,T)	=	105.000	PPM (VOLUME)
2:15 HRS	167.00 HRS (ET)	SO2 CONC OUTLET FLUE GAS	(GS- 16) / Y16(1,T)	=	120.000	PPM (VOLUME)
	A V E R A G E :	SO2 CONC OUTLET FLUE GAS	(GS- 16) / AY16A	=	100.000	PPM (VOLUME)
15:15 HRS	156.00 HRS (ET)	H2O CONC INLET FLUE GAS	(GS- 10) / Y10(4,T)	=	10.000	% (VOLUME)
3:15 HRS	168.00 HRS (ET)	H2O CONC INLET FLUE GAS	(GS- 10) / Y10(4,T)	=	10.000	% (VOLUME)
	A V E R A G E :	H2O CONC INLET FLUE GAS	(GS- 10) / AY10D	=	10.000	% (VOLUME)
17:15 HRS	156.00 HRS (ET)	ORIFICE PRESSURE DROP	(DP- 10) / DP10(T)	=	2.300	INCHES H2O
1:15 HRS	166.00 HRS (ET)	ORIFICE PRESSURE DROP	(DP- 10) / DP10(T)	=	2.300	INCHES H2O
	A V E R A G E :	ORIFICE PRESSURE DROP	(DP- 10) / ADP10	=	2.300	INCHES H2O
16:15 HRS	157.00 HRS (ET)	ORIFICE TEMPERATURE	(TL- 10) / TL10(T)	=	297.000	DEG F
18:15 HRS	159.00 HRS (ET)	ORIFICE TEMPERATURE	(TL- 10) / TL10(T)	=	305.000	DEG F
19:15 HRS	160.00 HRS (ET)	ORIFICE TEMPERATURE	(TL- 10) / TL10(T)	=	316.000	DEG F
20:15 HRS	161.00 HRS (ET)	ORIFICE TEMPERATURE	(TL- 10) / TL10(T)	=	322.000	DEG F
23:15 HRS	164.00 HRS (ET)	ORIFICE TEMPERATURE	(TL- 10) / TL10(T)	=	325.000	DEG F
3:15 HRS	168.00 HRS (ET)	ORIFICE TEMPERATURE	(TL- 10) / TL10(T)	=	325.000	DEG F
	A V E R A G E :	ORIFICE TEMPERATURE	(TL- 10) / ATL10	=	315.000	DEG F
20:15 HRS	161.00 HRS (ET)	WEIGHT CYCLONE DUST	(D- 11) / CD11(T)	=	0.0	LB DUST
3:15 HRS	168.00 HRS (ET)	WEIGHT CYCLONE DUST	(D- 11) / CD11(T)	=	0.500	LB DUST
	T O T A L :	WEIGHT CYCLONE DUST	(D- 11) / WD11	=	0.500	LB DUST
	R A T E :	WEIGHT CYCLONE DUST	(D- 11) / RD11	=	0.071	LB DUST/HR
20:15 HRS	161.00 HRS (ET)	WEIGHT COLLECTOR DUST	(D- 12) / CD12(T)	=	0.0	LB DUST
3:15 HRS	168.00 HRS (ET)	WEIGHT COLLECTOR DUST	(D- 12) / CD12(T)	=	0.0	LB DUST
	T O T A L :	WEIGHT COLLECTOR DUST	(D- 12) / WD12	=	0.0	LB DUST
	R A T E :	WEIGHT COLLECTOR DUST	(D- 12) / RD12	=	0.0	LB DUST/HR
20:15 HRS	161.00 HRS (ET)	WEIGHT CARBON WEEPAGE	(CW- 12) / CW12(T)	=	0.0	LB DUST
21:15 HRS	162.00 HRS (ET)	WEIGHT CARBON WEEPAGE	(CW- 12) / CW12(T)	=	0.230	LB DUST
3:15 HRS	168.00 HRS (ET)	WEIGHT CARBON WEEPAGE	(CW- 12) / CW12(T)	=	0.0	LB DUST
	T O T A L :	WEIGHT CARBON WEEPAGE	(CW- 12) / WCW12	=	0.230	LB DUST
	R A T E :	WEIGHT CARBON WEEPAGE	(CW- 12) / RCW12	=	0.033	LB DUST/HR
12:15 HRS	153.00 HRS (ET)	% TOT S ON CYCLONE DUST	(D- 11) / D11(1,T)	=	7.700	% (WEIGHT)

20:15 HRS	161.00 HRS (ET)	% TOT S ON CYCLONE DUST	(D- 11) / D11(1,T)	=	7.760 % (WEIGHT)
3:15 HRS	168.00 HRS (ET)	% TOT S ON CYCLONE DUST	(D- 11) / D11(1,T)	=	7.640 % (WEIGHT)
	A V E R A G E :	% TOT S ON CYCLONE DUST	(D- 11) / AD11A	=	7.700 % (WEIGHT)
12:15 HRS	153.00 HRS (ET)	% TOT S ON COLLECTOR DUST	(D- 12) / D12(1,T)	=	7.700 % (WEIGHT)
20:15 HRS	161.00 HRS (ET)	% TOT S ON COLLECTOR DUST	(D- 12) / D12(1,T)	=	7.760 % (WEIGHT)
3:15 HRS	168.00 HRS (ET)	% TOT S ON COLLECTOR DUST	(D- 12) / D12(1,T)	=	7.640 % (WEIGHT)
	A V E R A G E :	% TOT S ON COLLECTOR DUST	(D- 12) / AD12A	=	7.700 % (WEIGHT)

6" DIA CARBON PRECONDITIONER

14:15 HRS	155.00 HRS (ET)	% TOT S ON INLET CARBON	(CS-301) / Z301(1,T) =	9.860	% (WEIGHT)
22:15 HRS	163.00 HRS (ET)	% TOT S ON INLET CARBON	(CS-301) / Z301(1,T) =	8.300	% (WEIGHT)
2:15 HRS	167.00 HRS (ET)	% TOT S ON INLET CARBON	(CS-301) / Z301(1,T) =	8.060	% (WEIGHT)
	A V E R A G E :	% TOT S ON INLET CARBON	(CS-301) / AZ301A =	8.740	% (WEIGHT)
14:15 HRS	155.00 HRS (ET)	% H2O ON INLET CARBON	(CS-301) / Z301(2,T) =	7.000	% (WEIGHT)
22:15 HRS	163.00 HRS (ET)	% H2O ON INLET CARBON	(CS-301) / Z301(2,T) =	7.600	% (WEIGHT)
2:15 HRS	167.00 HRS (ET)	% H2O ON INLET CARBON	(CS-301) / Z301(2,T) =	6.000	% (WEIGHT)
	A V E R A G E :	% H2O ON INLET CARBON	(CS-301) / AZ301B =	6.867	% (WEIGHT)
20:15 HRS	161.00 HRS (ET)	WEIGHT CYCLONE DUST	(D-301) / CD301(T) =	0.0	LB DUST
3:15 HRS	168.00 HRS (ET)	WEIGHT CYCLONE DUST	(D-301) / CD301(T) =	0.0	LB DUST
	T O T A L :	WEIGHT CYCLONE DUST	(D-301) / WD301 =	0.0	LB DUST
	R A T E :	WEIGHT CYCLONE DUST	(D-301) / RD301 =	0.0	LB DUST/HR
15:15 HRS	156.00 HRS (ET)	% TOT S ON CYCLONE DUST	(D-301) / D301(1,T) =	0.0	% (WEIGHT)
3:15 HRS	168.00 HRS (ET)	% TOT S ON CYCLONE DUST	(D-301) / D301(1,T) =	0.0	% (WEIGHT)
	A V E R A G E :	% TOT S ON CYCLONE DUST	(D-301) / AD301A =	0.0	% (WEIGHT)

S U L F U R G E N E R A T O R

23: 2 HRS	163.80 HRS (ET)	SO2 CONC OUTLET GAS	(GS-206) / Y206(1,T) =	1.650	% (VOLUME)
	A V E R A G E :	SO2 CONC OUTLET GAS	(GS-206) / AY206A =	1.650	% (VOLUME)
16:20 HRS	157.10 HRS (ET)	H2S CONC INLET GAS	(GS-200) / Y200(2,T) =	23.300	% (VOLUME)
19:15 HRS	160.00 HRS (ET)	H2S CONC INLET GAS	(GS-200) / Y200(2,T) =	25.600	% (VOLUME)
20:26 HRS	161.20 HRS (ET)	H2S CONC INLET GAS	(GS-200) / Y200(2,T) =	24.400	% (VOLUME)
21:38 HRS	162.40 HRS (ET)	H2S CONC INLET GAS	(GS-200) / Y200(2,T) =	25.600	% (VOLUME)
	A V E R A G E :	H2S CONC INLET GAS	(GS-200) / AY200B =	24.725	% (VOLUME)
23: 2 HRS	163.80 HRS (ET)	H2S CONC OUTLET GAS	(GS-206) / Y206(2,T) =	0.0	% (VOLUME)
	A V E R A G E :	H2S CONC OUTLET GAS	(GS-206) / AY206B =	0.0	% (VOLUME)
16:20 HRS	157.10 HRS (ET)	H2 CONC INLET GAS	(GS-200) / Y200(3,T) =	0.200	% (VOLUME)
19:15 HRS	160.00 HRS (ET)	H2 CONC INLET GAS	(GS-200) / Y200(3,T) =	0.0	% (VOLUME)
20:26 HRS	161.20 HRS (ET)	H2 CONC INLET GAS	(GS-200) / Y200(3,T) =	0.0	% (VOLUME)
21:38 HRS	162.40 HRS (ET)	H2 CONC INLET GAS	(GS-200) / Y200(3,T) =	0.0	% (VOLUME)
	A V E R A G E :	H2 CONC INLET GAS	(GS-200) / AY200C =	0.050	% (VOLUME)
23: 2 HRS	163.80 HRS (ET)	H2 CONC OUTLET GAS	(GS-206) / Y206(3,T) =	0.0	% (VOLUME)
	A V E R A G E :	H2 CONC OUTLET GAS	(GS-206) / AY206C =	0.0	% (VOLUME)
16:20 HRS	157.10 HRS (ET)	H2O CONC INLET GAS	(GS-200) / Y200(4,T) =	22.400	% (VOLUME)
19:15 HRS	160.00 HRS (ET)	H2O CONC INLET GAS	(GS-200) / Y200(4,T) =	24.100	% (VOLUME)
20:26 HRS	161.20 HRS (ET)	H2O CONC INLET GAS	(GS-200) / Y200(4,T) =	23.400	% (VOLUME)
21:38 HRS	162.40 HRS (ET)	H2O CONC INLET GAS	(GS-200) / Y200(4,T) =	23.300	% (VOLUME)
	A V E R A G E :	H2O CONC INLET GAS	(GS-200) / AY200D =	23.300	% (VOLUME)
23: 2 HRS	163.80 HRS (ET)	H2O CONC OUTLET GAS	(GS-206) / Y206(4,T) =	49.600	% (VOLUME)
	A V E R A G E :	H2O CONC OUTLET GAS	(GS-206) / AY206D =	49.600	% (VOLUME)
16:20 HRS	157.10 HRS (ET)	N2 CONC INLET GAS	(GS-200) / Y200(5,T) =	56.000	% (VOLUME)
19:15 HRS	160.00 HRS (ET)	N2 CONC INLET GAS	(GS-200) / Y200(5,T) =	52.400	% (VOLUME)
20:26 HRS	161.20 HRS (ET)	N2 CONC INLET GAS	(GS-200) / Y200(5,T) =	54.200	% (VOLUME)
21:38 HRS	162.40 HRS (ET)	N2 CONC INLET GAS	(GS-200) / Y200(5,T) =	53.200	% (VOLUME)
	A V E R A G E :	N2 CONC INLET GAS	(GS-200) / AY200E =	53.950	% (VOLUME)
23: 2 HRS	163.80 HRS (ET)	N2 CONC OUTLET GAS	(GS-206) / Y206(5,T) =	45.300	% (VOLUME)
	A V E R A G E :	N2 CONC OUTLET GAS	(GS-206) / AY206E =	45.300	% (VOLUME)
15:15 HRS	156.00 HRS (ET)	N2 INLET VOL FLOW RATE	(G-200) / G200(5,T) =	127.000	CFH (70 DEG F)
3:15 HRS	168.00 HRS (ET)	N2 INLET VOL FLOW RATE	(G-200) / G200(5,T) =	127.000	CFH (70 DEG F)
	A V E R A G E :	N2 INLET VOL FLOW RATE	(G-200) / AG200E =	127.000	CFH (70 DEG F)
14:15 HRS	155.00 HRS (ET)	% TOT S ON INLET CARBON	(GS-302) / Z302(1,T) =	9.360	% (WEIGHT)
22:15 HRS	163.00 HRS (ET)	% TOT S ON INLET CARBON	(GS-302) / Z302(1,T) =	8.300	% (WEIGHT)
2:15 HRS	167.00 HRS (ET)	% TOT S ON INLET CARBON	(GS-302) / Z302(1,T) =	8.060	% (WEIGHT)
	A V E R A G E :	% TOT S ON INLET CARBON	(GS-302) / AZ302A =	8.740	% (WEIGHT)
14:15 HRS	155.00 HRS (ET)	% TOT S ON OUTLET CARBON	(GS-200) / Z200(1,T) =	20.500	% (WEIGHT)
18:15 HRS	159.00 HRS (ET)	% TOT S ON OUTLET CARBON	(GS-200) / Z200(1,T) =	19.000	% (WEIGHT)
22:15 HRS	163.00 HRS (ET)	% TOT S ON OUTLET CARBON	(GS-200) / Z200(1,T) =	18.940	% (WEIGHT)
2:15 HRS	167.00 HRS (ET)	% TOT S ON OUTLET CARBON	(GS-200) / Z200(1,T) =	18.800	% (WEIGHT)
	A V E R A G E :	% TOT S ON OUTLET CARBON	(GS-200) / AZ200A =	19.310	% (WEIGHT)
14:15 HRS	155.00 HRS (ET)	% H2O ON INLET CARBON	(GS-302) / Z302(2,T) =	7.000	% (WEIGHT)
18:15 HRS	159.00 HRS (ET)	% H2O ON INLET CARBON	(GS-302) / Z302(2,T) =	7.600	% (WEIGHT)
22:15 HRS	163.00 HRS (ET)	% H2O ON INLET CARBON	(GS-302) / Z302(2,T) =	6.000	% (WEIGHT)

	A V E R A G E :	% H2O ON INLET CARBON	(CS-302) /	AZ3029 =	6.867 % (WEIGHT)
14:15 HRS	155.00 HRS (ET)	% H2O ON OUTLET CARBON	(CS-200) /	Z200(2,T) =	3.100 % (WEIGHT)
18:15 HRS	159.00 HRS (ET)	% H2O ON OUTLET CARBON	(CS-200) /	Z200(2,T) =	3.300 % (WEIGHT)
22:15 HRS	163.00 HRS (ET)	% H2O ON OUTLET CARBON	(CS-200) /	Z200(2,T) =	2.700 % (WEIGHT)
2:15 HRS	167.00 HRS (ET)	% H2O ON OUTLET CARBON	(CS-200) /	Z200(2,T) =	4.900 % (WEIGHT)
	A V E R A G E :	% H2O ON OUTLET CARBON	(CS-200) /	AZ200B =	3.500 % (WEIGHT)
14:15 HRS	155.00 HRS (ET)	% ACID ON OUTLET CARBON	(CS-200) /	Z200(3,T) =	2.940 % (WEIGHT)
18:15 HRS	159.00 HRS (ET)	% ACID ON OUTLET CARBON	(CS-200) /	Z200(3,T) =	4.510 % (WEIGHT)
22:15 HRS	163.00 HRS (ET)	% ACID ON OUTLET CARBON	(CS-200) /	Z200(3,T) =	3.820 % (WEIGHT)
2:15 HRS	167.00 HRS (ET)	% ACID ON OUTLET CARBON	(CS-200) /	Z200(3,T) =	4.210 % (WEIGHT)
	A V E R A G E :	% ACID ON OUTLET CARBON	(CS-200) /	AZ200C =	3.870 % (WEIGHT)

H2S GENERATOR/SULFUR STRIPPER

17:15 HRS	158.00 HRS (ET)	H2 CONC INLET GAS	(GS-100) / Y100(3,T) =	48.500	% (VOLUME)
	A V E R A G E :	H2 CONC INLET GAS	(GS-100) / AY100C =	48.500	% (VOLUME)
16:20 HRS	157.10 HRS (ET)	H2 CONC OUTLET GAS	(GS-108) / Y108(3,T) =	0.000	% (VOLUME)
19:15 HRS	160.00 HRS (ET)	H2 CONC OUTLET GAS	(GS-108) / Y108(3,T) =	0.0	% (VOLUME)
20:26 HRS	161.20 HRS (ET)	H2 CONC OUTLET GAS	(GS-108) / Y108(2,T) =	0.0	% (VOLUME)
21:38 HRS	162.40 HRS (ET)	H2 CONC OUTLET GAS	(GS-108) / Y108(3,T) =	0.0	% (VOLUME)
	A V E R A G E :	H2 CONC OUTLET GAS	(GS-108) / AY108C =	0.050	% (VOLUME)
17:15 HRS	158.00 HRS (ET)	N2 CONC INLET GAS	(GS-100) / Y100(5,T) =	51.500	% (VOLUME)
	A V E R A G E :	N2 CONC INLET GAS	(GS-100) / AY100E =	51.500	% (VOLUME)
16:20 HRS	157.10 HRS (ET)	N2 CONC OUTLET GAS	(GS-108) / Y108(5,T) =	56.000	% (VOLUME)
19:15 HRS	160.00 HRS (ET)	N2 CONC OUTLET GAS	(GS-108) / Y108(5,T) =	52.400	% (VOLUME)
20:26 HRS	161.20 HRS (ET)	N2 CONC OUTLET GAS	(GS-108) / Y108(5,T) =	54.200	% (VOLUME)
21:38 HRS	162.40 HRS (ET)	N2 CONC OUTLET GAS	(GS-108) / Y108(5,T) =	53.200	% (VOLUME)
0:15 HRS	165.00 HRS (ET)	N2 CONC OUTLET GAS	(GS-108) / Y108(5,T) =	52.500	% (VOLUME)
1:15 HRS	166.00 HRS (ET)	N2 CONC OUTLET GAS	(GS-108) / Y108(5,T) =	54.100	% (VOLUME)
3:15 HRS	168.00 HRS (ET)	N2 CONC OUTLET GAS	(GS-108) / Y108(5,T) =	52.600	% (VOLUME)
	A V E R A G E :	N2 CONC OUTLET GAS	(GS-108) / AY108E =	53.571	% (VOLUME)
16:20 HRS	157.10 HRS (ET)	H2S CONC OUTLET GAS	(GS-108) / Y108(2,T) =	23.300	% (VOLUME)
19:15 HRS	160.00 HRS (ET)	H2S CONC OUTLET GAS	(GS-108) / Y108(2,T) =	25.600	% (VOLUME)
20:26 HRS	161.20 HRS (ET)	H2S CONC OUTLET GAS	(GS-108) / Y108(2,T) =	24.400	% (VOLUME)
21:38 HRS	162.40 HRS (ET)	H2S CONC OUTLET GAS	(GS-108) / Y108(2,T) =	25.600	% (VOLUME)
0:15 HRS	165.00 HRS (ET)	H2S CONC OUTLET GAS	(GS-108) / Y108(2,T) =	26.100	% (VOLUME)
1:15 HRS	166.00 HRS (ET)	H2S CONC OUTLET GAS	(GS-108) / Y108(2,T) =	24.100	% (VOLUME)
3:15 HRS	168.00 HRS (ET)	H2S CONC OUTLET GAS	(GS-108) / Y108(2,T) =	26.100	% (VOLUME)
	A V E R A G E :	H2S CONC OUTLET GAS	(GS-108) / AY108B =	25.029	% (VOLUME)
16:20 HRS	157.10 HRS (ET)	H2O CONC OUTLET GAS	(GS-108) / Y108(4,T) =	22.400	% (VOLUME)
19:15 HRS	160.00 HRS (ET)	H2O CONC OUTLET GAS	(GS-108) / Y108(4,T) =	24.100	% (VOLUME)
20:26 HRS	161.20 HRS (ET)	H2O CONC OUTLET GAS	(GS-108) / Y108(4,T) =	23.400	% (VOLUME)
21:38 HRS	162.40 HRS (ET)	H2O CONC OUTLET GAS	(GS-108) / Y108(4,T) =	23.300	% (VOLUME)
0:15 HRS	165.00 HRS (ET)	H2O CONC OUTLET GAS	(GS-108) / Y108(4,T) =	21.000	% (VOLUME)
1:15 HRS	166.00 HRS (ET)	H2O CONC OUTLET GAS	(GS-108) / Y108(4,T) =	21.400	% (VOLUME)
3:15 HRS	168.00 HRS (ET)	H2O CONC OUTLET GAS	(GS-108) / Y108(4,T) =	21.000	% (VOLUME)
	A V E R A G E :	H2O CONC OUTLET GAS	(GS-108) / AY108D =	22.371	% (VOLUME)
15:15 HRS	156.00 HRS (ET)	N2 INLET VOL FLOW RATE	(G-100) / G100(5,T) =	127.000	CFH (70 DEG F)
3:15 HRS	168.00 HRS (ET)	N2 INLET VOL FLOW RATE	(G-100) / G100(5,T) =	127.000	CFH (70 DEG F)
	A V E R A G E :	N2 INLET VOL FLOW RATE	(G-100) / AG100E =	127.000	CFH (70 DEG F)
20:15 HRS	161.00 HRS (ET)	WEIGHT CYCLONE DUST	(D-101) / CD101(T) =	0.0	LB DUST
3:15 HRS	168.00 HRS (ET)	WEIGHT CYCLONE DUST	(D-101) / CD101(T) =	0.0	LB DUST
	T O T A L :	WEIGHT CYCLONE DUST	(D-101) / WD101 =	0.0	LB DUST
	R A T E :	WEIGHT CYCLONE DUST	(D-101) / RD101 =	0.0	LB DUST/HR
20:15 HRS	161.00 HRS (ET)	WEIGHT FILTER DUST	(D-102) / CD102(T) =	0.0	LB DUST
3:15 HRS	168.00 HRS (ET)	WEIGHT FILTER DUST	(D-102) / CD102(T) =	0.0	LB DUST
	T O T A L :	WEIGHT FILTER DUST	(D-102) / WD102 =	0.0	LB DUST
	R A T E :	WEIGHT FILTER DUST	(D-102) / RD102 =	0.0	LB DUST/HR
14:15 HRS	155.00 HRS (ET)	% TOT S ON CYCLONE DUST	(D-101) / D101(1,T) =	4.660	% (WEIGHT)
18:15 HRS	159.00 HRS (ET)	% TOT S ON CYCLONE DUST	(D-101) / D101(1,T) =	4.620	% (WEIGHT)
22:15 HRS	163.00 HRS (ET)	% TOT S ON CYCLONE DUST	(D-101) / D101(1,T) =	4.360	% (WEIGHT)
2:15 HRS	167.00 HRS (ET)	% TOT S ON CYCLONE DUST	(D-101) / D101(1,T) =	4.320	% (WEIGHT)

	A V E R A G E :	% TOT S CA CYCLONE DUST	(D-101) /	AD101A =	4.490 % (WEIGHT)
15:15 HRS	156.00 HRS (ET)	% TOT S CA FILTER DUST	(D-102) /	D102(1,T) =	0.0 % (WEIGHT)
3:15 HRS	168.00 HRS (ET)	% TOT S CA FILTER DUST	(D-102) /	D102(1,T) =	0.0 % (WEIGHT)
	A V E R A G E :	% TOT S CA FILTER DUST	(D-102) /	AD102A =	0.0 % (WEIGHT)

C A R B O N I N V E N T O R Y H O P P E R

14:15 HRS	155.00 HRS (ET)	% RESIDUAL S ON CARBON	(CS- 90) /	Z90(1,T) =	4.660	% (WEIGHT)
18:15 HRS	159.00 HRS (ET)	% RESIDUAL S ON CARBON	(CS- 90) /	Z90(1,T) =	4.620	% (WEIGHT)
22:15 HRS	163.00 HRS (ET)	% RESIDUAL S ON CARBON	(CS- 90) /	Z90(1,T) =	4.360	% (WEIGHT)
2:15 HRS	167.00 HRS (ET)	% RESIDUAL S ON CARBON	(CS- 90) /	Z90(1,T) =	4.320	% (WEIGHT)
A V E R A G E :		% RESIDUAL S ON CARBON	(CS- 90) /	AZ90A =	4.490	% (WEIGHT)
14:15 HRS	155.00 HRS (ET)	% RESIDUAL H2O ON CARBON	(CS- 90) /	Z90(2,T) =	2.230	% (WEIGHT)
18:15 HRS	159.00 HRS (ET)	% RESIDUAL H2O ON CARBON	(CS- 90) /	Z90(2,T) =	2.230	% (WEIGHT)
22:15 HRS	163.00 HRS (ET)	% RESIDUAL H2O ON CARBON	(CS- 90) /	Z90(2,T) =	2.230	% (WEIGHT)
2:15 HRS	167.00 HRS (ET)	% RESIDUAL H2O ON CARBON	(CS- 90) /	Z90(2,T) =	2.230	% (WEIGHT)
A V E R A G E :		% RESIDUAL H2O ON CARBON	(CS- 90) /	AZ90B =	2.230	% (WEIGHT)
15:15 HRS	156.00 HRS (ET)	CARBON RECYCLE RATE	(C- 90) /	C90(1,T) =	31.000	LB MAT'L/HR
3:15 HRS	168.00 HRS (ET)	CARBON RECYCLE RATE	(C- 90) /	C90(1,T) =	31.000	LB MAT'L/HR
A V E R A G E :		CARBON RECYCLE RATE	(C- 90) /	AC90A =	31.000	LB MAT'L/HR

S U L F U R C O N D E N S E R

10:15 HRS	151.00 HRS (ET)	WEIGHT SULFUR COLLECTED	(S-401) /	S401(T) =	0.0	LB SULFUR
14:15 HRS	155.00 HRS (ET)	WEIGHT SULFUR COLLECTED	(S-401) /	S401(T) =	3.700	LB SULFUR
15:15 HRS	156.00 HRS (ET)	WEIGHT SULFUR COLLECTED	(S-401) /	S401(T) =	18.500	LB SULFUR
20:15 HRS	161.00 HRS (ET)	WEIGHT SULFUR COLLECTED	(S-401) /	S401(T) =	4.200	LB SULFUR
0:15 HRS	165.00 HRS (ET)	WEIGHT SULFUR COLLECTED	(S-401) /	S401(T) =	5.000	LB SULFUR
3:15 HRS	168.00 HRS (ET)	WEIGHT SULFUR COLLECTED	(S-401) /	S401(T) =	3.000	LB SULFUR
T O T A L :		WEIGHT SULFUR COLLECTED	(S-401) /	WS401 =	34.400	LB SULFUR
R A T E :		WEIGHT SULFUR COLLECTED	(S-401) /	RS401 =	2.024	LB SULFUR/HR

STATUS REPORT OF OPERATING CONDITIONS FOR INTEGRATED OPERATION OF SO2 RECOVERY PROCESS

OPERATING PERIOD:

DATE: 4/26/74 TIME OF RECORD: 15:15 HRS TO 24: 0 HRS
DATE: 4/27/74 TIME OF RECORD: 0: 0 HRS TO 3:15 HRS

PROCESS ELAPSED TIME OF PERIOD: START 156.00 HRS / END 168.00 HRS LENGTH OF PERIOD: 12.00 HRS

SUMMARY OF INTEGRATED PROCESS PERFORMANCE:

1.	SO2 REMOVAL	PRSO2 =	95.14 % (ACTUAL)	90.0 % (GOAL)
2.	H2S UTILIZATION	PUH2S =	100.00 % (ACTUAL)	95.0 % (GOAL)
3.	ACID CONVERSION (TO SULFUR)	PVCS =	68.69 % (ACTUAL)	99.0 % (GOAL)
4.	H2 UTILIZATION (TO H2S)	PHCHS =	62.46 % (ACTUAL)	90.0 % (GOAL)
5.	SULFUR RECOVERY	PRS =	88.08 % (ACTUAL)	100.0 % (GOAL) OF SCRBED SO2
			33.20 % (ACTUAL)	25.0 % (GOAL) OF STRIPPED SULFUR
6.	H2 UTILIZATION 4" UNIT	PUH2 =	99.88 %	
7.	RESIDUAL SULFUR ON CARBON	X90A =	0.0481 LB S/LB C	
8.	CARBON RECYCLE RATE (DB)	RC90 =	28.917 LB C(DB)/HR	
9.	ACID LOADING INLET CARBON 6" UNIT	X301C =	0.2159 LB ACID/LB C	
10.	MOISTURE CONTENT INLET CARBON 6" UNIT	X301B =	0.0932 LB H2O/LB C	
11.	ACID LOADING INLET CARBON 8" UNIT	X302C =	0.2159 LB ACID/LB C	
12.	MOISTURE CONTENT INLET CARBON 8" UNIT	X302B =	0.0932 LB H2O/LB C	
13.	TOTAL ACID CONVERTED 8" UNIT	PVC =	75.96 %	
14.	SULFUR CONVERSION (TO H2S)	PSCHS =	80.70 %	
15.	SULFUR CONDENSER EFFICIENCY	ERV400=	172.04 %	

MAJOR EVENTS DURING OPERATING PERIOD:

CUT OFF CO2 TO 4" UNIT AND SET N2
BACK TO 104 CFH AT 155.8 HRS.
VOLUNTARY SHUT DOWN OF PILOT PLANT
STARTED AT 168.0 HRS.
ALL CARBON REGENERATED DURING SHUT DOWN

STATUS REPORT OF OPERATING CONDITIONS FOR INTEGRATED OPERATION OF SO2 RECOVERY PROCESS

OPERATING PERIOD:

DATE: 4/26/74 TIME OF RECORD: 15:15 HRS TO 24: 0 HRS
DATE: 4/27/74 TIME OF RECORD: 0: 0 HRS TO 3:15 HRS

PROCESS ELAPSED TIME OF PERIOD: START 156.00 HRS / END 168.00 HRS LENGTH OF PERIOD: 12.00 HRS

SULFUR MATERIAL BALANCE (USING PROCESS H2S):

S O 2 S C R B E R

I N				
INLET GAS AS SO2	(G- 13) /	BG10A =	2.4146	LB SULFUR/HR
INLET GAS RESIDUAL S	(G- 11) /	BG11A =	1.3919	LB SULFUR/HR
T O T A L I N :	(RV- 10) /	SI10 =	3.8065	LB SULFUR/HR
O U T				
OUTLET GAS AS SO2	(G- 13) /	BG13A =	0.1173	LB SULFUR/HR
OUTLET CARBON	(C- 12) /	BC12A =	3.4301	LB SULFUR/HR
CYCLONE DUST	(D- 11) /	BD11A =	0.0055	LB SULFUR/HR
COLLECTOR DUST	(D- 12) /	BD12A =	0.0	LB SULFUR/HR
CARBON WEEPAGE	(CW- 12) /	BCW12A =	0.0039	LB SULFUR/HR
T O T A L O U T :	(RV- 10) /	SO10 =	3.5568	LB SULFUR/HR

6" D I A C A R B O N P R E C O N D I T I O N E R

I N				
INLET CARBON	(C- 12) /	BC12A =	3.4301	LB SULFUR/HR
T O T A L I N :	(RV-300) /	SI300 =	3.4301	LB SULFUR/HR
O U T				
OUTLET CARBON	(C-201) /	BC201A =	3.4301	LB SULFUR/HR
CYCLONE DUST	(D-301) /	BD301A =	0.0	LB SULFUR/HR
T O T A L O U T :	(RV-300) /	SO300 =	3.4301	LB SULFUR/HR

S U L F U R G E N E R A T O R

I N				
INLET GAS AS H2S (CYL)	(G-201) /	BG201B =	0.0	LB SULFUR/HR
INLET GAS AS H2S (PROC)	(G-201) /	BG203R =	4.9188	LB SULFUR/HR
INLET CARBON	(C-201) /	BC201A =	3.4301	LB SULFUR/HR
T O T A L I N :	(RV-200) /	SI200 =	8.3489	LB SULFUR/HR
O U T				
OUTLET GAS AS H2S	(G-205) /	BG205B =	0.0	LB SULFUR/HR
OUTLET GAS AS SO2	(G-205) /	BG205A =	0.3835	LB SULFUR/HR
OUTLET CARBON	(C-202) /	BC202A =	7.4869	LB SULFUR/HR
T O T A L O U T :	(RV-200) /	SO200 =	7.8703	LB SULFUR/HR

H2S GENERATOR / SULFUR STRIPPER

IN

INLET CARBON	(C-2(2) / BC202A =	7.4669	LB SULFUR/HR
TOTAL IN :	(R\-1(C) / SI100 =	7.4869	LB SULFUR/HR

OUT

OUTLET CARBON	(C-1(3) / BC103A =	1.3919	LB SULFUR/HR
OUTLET GAS AS H2S	(C-1(4) / BG104B =	4.9188	LB SULFUR/HR
OUTLET GAS AS S	(C-1(4) / BG104S =	2.0235	LB SULFUR/HR
CYCLONE DUST	(C-1(1) / BD101A =	0.0	LB SULFUR/HR
FILTER DUST	(C-1(2) / BD102A =	0.0	LB SULFUR/HR
TOTAL OUT :	(R\-1(C) / SO100 =	8.3342	LB SULFUR/HR

OVERALL SULFUR BALANCE

IN

INLET GAS 18" UNIT AS SO2	(G- 10) / BG10A =	2.4146	LB SULFUR/HR
INLET GAS 8" UNIT AS CYL H2S	(G-2(1) / BG201B =	0.0	LB SULFUR/HR
TOTAL SULFUR IN :		2.4146	LB SULFUR/HR

OUT

OUTLET GAS 18" UNIT AS SO2	(G- 13) / BG13A =	0.1173	LB SULFUR/HR
CYCLONE DUST 18" UNIT	(D- 11) / BD11A =	0.0055	LB SULFUR/HR
COLLECTOR DUST 18" UNIT	(D- 12) / BD12A =	0.0	LB SULFUR/HR
CARBON WEEPAGE 18" UNIT	(CW- 12) / BCW12A =	0.0039	LB SULFUR/HR
CYCLONE DUST 6" UNIT	(D-3(1) / BD301A =	0.0	LB SULFUR/HR
OUTLET GAS 8" UNIT AS H2S	(G-2(5) / BG205B =	0.0	LB SULFUR/HR
OUTLET GAS 8" UNIT AS SO2	(G-2(5) / BG205A =	0.3835	LB SULFUR/HR
OUTLET GAS 4" UNIT AS H2S	(G-1(4) / BG104B =	0.0	LB SULFUR/HR
OUTLET GAS 4" UNIT AS S	(G-1(4) / BG104S =	2.0235	LB SULFUR/HR
CYCLONE DUST 4" UNIT	(D-1(1) / BD101A =	0.0	LB SULFUR/HR
FILTER DUST 4" UNIT	(D-1(2) / BD102A =	0.0	LB SULFUR/HR
TOTAL SULFUR OUT :		2.5337	LB SULFUR/HR

HYDROGEN MATERIAL BALANCE:

SULFUR GENERATOR

IN			
	INLET GAS AS H2	(G-203) / BG203C =	0.0006 LB HYDROGEN/HR
	INLET GAS AS H2S (CYL)	(G-203) / BG203B =	0.0 LB HYDROGEN/HR
	INLET GAS AS H2S (PROC)	(G-203) / BG203 =	0.3074 LB HYDROGEN/HR
	INLET GAS AS H2O	(G-203) / BG203D =	0.2841 LB HYDROGEN/HR
	INLET CARBON	(C-202) / BC202H =	0.4268 LB HYDROGEN/HR
	TOTAL IN:	(RV-200) / HI200 =	1.0189 LB HYDROGEN/HR
OUT			
	OUTLET GAS AS H2	(G-205) / BG205C =	0.0 LB HYDROGEN/HR
	OUTLET GAS AS H2S	(G-205) / BG205B =	0.0 LB HYDROGEN/HR
	OUTLET GAS AS H2O	(G-205) / BG205D =	0.7203 LB HYDROGEN/HR
	OUTLET CARBON	(C-202) / BC202H =	0.1814 LB HYDROGEN/HR
	TOTAL OUT:	(RV-200) / HO200 =	0.9017 LB HYDROGEN/HR

H2S GENERATOR/SULFUR STRIPPER

IN			
	INLET GAS AS H2	(G-103) / BG103C =	0.4921 LB HYDROGEN/HR
	INLET CARBON	(C-202) / BC202H =	0.1814 LB HYDROGEN/HR
	TOTAL IN:	(RV-100) / HI100 =	0.6735 LB HYDROGEN/HR
OUT			
	OUTLET GAS AS H2	(G-104) / BG104C =	0.0006 LB HYDROGEN/HR
	OUTLET GAS AS H2S	(G-104) / BG104B =	0.3074 LB HYDROGEN/HR
	OUTLET GAS AS H2O	(G-104) / BG104D =	0.2747 LB HYDROGEN/HR
	TOTAL OUT:	(RV-100) / HO100 =	0.5827 LB HYDROGEN/HR

APPENDIX A-13

DATA FROM SOLVENT EXTRACTION EXPERIMENTS

0-70-77	JHS9 B12	20.45g	14.0%S											
	$(NH_4)_2S$ 20% ac				100ml									
3068326	one 15 min. contact	by	slurry	agitation			30 min. contact			60 min. contact				
(030071)														
	Water Wash													
	(1)		8.72%S				8.4%S			8.6%S				
	(2)		8.6				8.3			8.4				
	Boiled(H_2O) & Dried		8.6 %S				8.4			8.3				
		C-activity retained 26%												

										Inert Gas	Degassed		Steamed			
3068:46	C-7077(Virgin carbon)		0.5%S								beforehand					
					CS_2											
3068:31		30g			50ml 1 extn	30 min. agit.				(air)	No		No			2.2%S
					$(NH_4)_2S$											
3068:31		30g			100ml 1 extn	30 min. agit.				(air)	No		No			4.0%S
3068:46		40g			~65ml 1 soak	30 min. soak				Helium	No.		1.5 hr. 200°F slow exhaust steam			1.7%S
3068:48		40g			~70ml	60 min. soak				N_2	1800°F	60 min	8 hr.	250-75°F @ 70 atm		1.[illegible]%S

C-70-77	FMS9-E12	20g	14%S	(~33cc)			
	Xylene					50ml Xylene each	
		aliquot	%S			Recovered S	
	1 Extrn.	0.655g	9.08				contained
						24ml	0.585g
	2	0.472g	5.52				
						48	0.691
	3	0.566g	4.60				
						48	0.472
	4	0.404	3.52				
						49	0.272
	5	17.707	3.08				
						48	0.137
		Continuing					
	Carbon used	15.0g	3.08%				
						38ml Xylene each	
	6	0.561g	2.32%				
						20ml	0.040g
	7	0.377	2.04				
						35	0.039
	8	0.570	1.76				
						36	0.022
	9	0.515	1.60				
						37	0.014
	10	12.261	1.46				
						36	0.005
			051271				
		3175 E	10-12				

CHARLESTON RESEARCH CENTER

C-70-77	FHSO B12	21.4g	14.0%S			
	CS_2			(50ml		)
				Recovered		
	1 Extrn.	0.63g	10.24%S			
				25ml	0.71gS$_x$	
	2					
				45ml	0.72g	
	3					
				45	0.39	
	4					
				45	0.24g	
	5	0.83g	6.23%			
				45ml	0.16gS$_x$	
	6					
				45	0.081g	
	7	0.97g	3.12			
				45ml	0.054gS$_x$	
	8					
				45	0.030g	
	9	0.61g	2.56			
				45.0	0.033g	
	10	15.62	3.2%S			
				45ml	0.011gS$_x$	
		Under	Air			
		Extrn.		77°F		
			slurry	agitation, ~20min.		
		Decanted				
		Solvent	re-freshed			
		Solvent	evapd & matter OD 105°C o'nit			
			041571			
		3068 S	45			

CHARLESTON RESEARCH CENTER

C-70-77	FHS9-312	39.2g	14.0%S	(~65cc)		
	$(NH_4)_2S$ 15%aq				(100ml	1.012gS_x)
					Recovered	
	1 Extrn.	0.554g	8.00%S			
					70ml	1.35gS
	2	0.641	6.96			
					80	1.28
	3	0.622	5.88			
					85	1.05
	4	0.530	4.96			
					75	0.77
	5	0.538	4.16			
					80	0.68
	6	0.556	3.56			
					80	0.595
	7	0.536	3.44			
					85	0.525
	8	0.512	3.16			
					85	0.510
	9	0.582	2.80			
					92	0.486
	10	0.745	2.72			
					120ml	0.587
	Wash & Steamed	27.226g	2.08%S			
		Under	N_2			
		Extrn.	100-105°F			
			circulating		35ccpm	25min.
		H_2Owash	100-105°F			
			3 times		60ccpm	
		Steamed	250-280°F			
			8 hr.		70ccpm	
			051171			
		3175 S	8-9			

C-70-77	FHS9 B12	39.3g	14.0%S	(~65cc)		
	$(NH_4)_2S$ 15%aq				(100 ml 1.05gS$_x$)	
					Recovered	
	1 Extrn.	1.422g	3.60%S			
					75ml	1.42gS$_x$
	2	1.415	3.72			
					85	1.49
	3	1.739	5.43			
					100	1.33g
	4	1.2000	4.84			
					90	0.93
	5	0.398	4.32			
					120	1.10gS$_x$
	Washed & Steamed	27.981g	3.76%S			
		Under	N_2			
		Extrn.		140°F		
			circulating		35ccpm	30min.
		H_2O wash		130-150°F		
		3 times(~10 min.ea)			60ccpm	
		Steamed		250-275°F		
			8 hr.		70cc/m	
			050571			
		3175 S	5-6			

C-70-77	FHS9 B12	40.9g	140%S	(~65cc)					39.7g	14.0%S	(~65cc)			
	$(NH_4)_2S$ 15%aq				(100ml	0.482gS_x)								
					Recovered							Recovered		
	1 Extrn.	1.099g	10.64%S						1.637g	10.00%S				
					75ml	1.42gS_x						80ml	1.56gS_x	
	2	1.166g	7.48						1.606g	8.32				
					85ml	1.26g						90ml	1.33g	
	3	1.445g	7.40%						1.696g	7.52%				
					80	0.96g						90	1.07g	
	4	1.294g	6.76%						1.455g	6.28%				
					80	0.71g						80	0.935g	
	5	-	-						-	-				
					130ml	0.92gS_x						135ml	0.93gS_x	
	Washed & Steamed	30.277g	4.08%						29.033	2.80%				
		Under	N_2						As Per					
											except	during	steaming	
		Extrn.		105°F										
			circulating		35ccpm	30 min.			temp.	away				
											got to 1000°F			
		H_2O wash		105°F						hot cycle period 1/2 - 3/4 hr.				
		3 times (~10 min.ea)			60ccpm									
		Steamed		250-275°F										
		8 hr.			70ccpm									
		Carbon: Activity Retained 47.4%												
			042971							042871				
		3175 S	3-4						3175 S	1-2				

C-70-77	FHS9 B12	40.0g	14.0%S	(~65cc)		
	$(NH_4)_2S$ 15%ac				(100ml	0.550gS$_x$)
					Recovered	
	1 Extrn.	1.332g	11.64%S			
					80ml	1.55gS$_x$
	2	1.221g	10.0			
					80ml	1.30g
	3	1.421g	9.40%			
					80ml	1.0gS$_x$
	4	1.410g	8.12%S			
					75ml	0.79g
	5	-	-			
					125ml	11.1gS$_x$
	Washed & Steamed	29.38g	6.64%S			
		Under	N_2			
		Extrn.		77°F		
			circulating		35ccpm	30min.
		H_2O washing		77°F		
		3 times (~10 min. ea) 60ccpm				
		Steamed		250-300°F		
			8 hr.		70ccpm	
			042671			
		3068 E	49-50			

CHARLESTON RESEARCH CENTER

C-70-77	EH39 B12	42.29g	14.0%S		
	$(NH_4)_2S$ 20% ac			100ml	
	1 Extrn.	2.08g	10.0%S		
	2	2.03g	5.28%		
	3	2.60g	5.4		
	4	2.35g	4.8%		
	5	-	-		
	Washed & Dried	30.50g	4.4%		
		Under	Air		
		Extracted slurry agitated			15 min.
		Water washed by slurry			
		Decanted and oven dried 105°C			overnight
		Carbon activity retained			20.8%
			031971		
		3063 $	32		

CHARLESTON RESEARCH CENTER

APPENDIX A-14

LITERATURE SURVEY FOR RECOVERY OF SULFUR BY SOLVENT EXTRACTION

I. SULFUR RECOVERY - REVIEW ITEMS

1. Berthelot, Ch. Recovery of sulfur in the coke plants in Germany. Genie Civil 113, pp. 401-6 (1938).

2. Berthelot, Ch. Recovery of sulfur in coal-carbonization plants and petroleum refineries. Genie Civil 116, pp. 6-7 (1940).

3. Brabant, M. Desulfurization of (town) gas and sulfur recovery processes. J. usines Gaz 64, pp. 33-43, 49-56, 69-75 (1940).

4. Brabant, M. Desulfurization of gas and processes for recovery of sulfur. Schweiz. Ver. Gas-u. Wasserfach. Monats-Bull. 21, pp. 26-30, 41-2, 96-100, 114-6 (1941).

5. Bulian, W.; Dittmar, A., and Feher, F. Removing elementary sulfur from natural gas. Erdoel Kohle, Erdgas, Petrochem. 20 (12), pp. 849-52 (1967).

6. Evans, E. C. et al-Special study of sulfur removal and recovery from fuels. J. Inst. Fuel 29, pp. 138-9 (1956).

*7. Goar, B. G. Today s sulfur recovery processes. Hydrocarbon Process. 1968, 47(9), pp. 248-52.

8. Grosskinsky, O. Recovery and utilization of nitrogen and sulfur produced in coal carbonization. Bergbau - Arch. 5/6, pp. 146-52 (1947).

*9. Kronacher, H. K. Modern Desulfurization Processes in Germany. Gas-Age Record 68,(2), pp. 37-56 (1931).

---

* Filed in Charleston Research Center

*(T) Translated into English

10. Lissner, A. The importance of the sulfur of coal in the German raw-material economy. Tech. Niederdonau 1, 197-9, 218-21 (1940).

*11. Lorenzen, G. Purification of Gases with Special Attention to Desulfurization and the Recovery of Sulfur. Chem. Fabrik 12(1,2):6-23 (1939).

12. Muhlert, F. Recovery of by-product nitrogen and sulfur in the coke-oven and gas industries. Brennstoff-Chem., 10, pp. 487-90 (1929).

*13. Powell, Alfred R. Recovery of sulfur from fuel gases. Ind. Eng. Chem. 31, pp. 789-96 (1939).

14. Rosendahl, F. Recovery of coke-oven gas products. Oel u. Kohle ver. Petroleum, 36, pp. 229-43 (1940).

15. Secchi, I. M. Recovery of sulfur from coke-oven gases. Chim. e industria (Italy) 19, 187-91 (1937).

*16. Sweeney, E. L. and Sands, A. E. The removal of free sulfur from spent oxide. Gas Age - Record 77, pp. 657-62 (1936).

17. Thau A. Extraction and utilization of fuel-gas sulfur. Z. Ver. deut. Ing., Beiheft Folge 1938, no. 3, pp. 81-6.

18. Wagner, P. Utilization of spent oxide from gas works. Rev. Prod. Chim., 24, pp. 397-404 (1921).

II. SOLVENTS FOR SULFUR EXTRACTION

A. Ammonium Compounds

1. Aoki, T.; Morikawa, M. and Akiyama, Y. to Sumitomo Chem. Co. Recovery of sulfur from hydrogen sulfide. Japan patent 582,626. April 12, 1958.

2. Collin, F. J. A-G. Extraction of sulfur from fumes containing hydrogen sulfide. British patent 748,037. April 18, 1956.

3. Gluud, W., Schonfelder, R. and Riese, W. Purification of sulfur from gas plants. Brennstoff-Chem. 8, pp. 168-9 (1927).

4. I. G. Farbenind. A-G. Gas purification. British patent 320,190. Aug. 25, 1928.

5. Pieters, H. A. J. Removal of hydrogen sulfide from gases. Brennstoff-Chem. 18, 373-6 (1937).

6. Wallis, E. Recovery of sulfur in a marketable form from flue gases. Brit. Chem. Eng. 7, pp. 833-6 (1962).

7. Williams, P. E. Treatment of spent oxide. British patent 596. Jan. 9, 1909.

B. Aliphatic Hydrocarbons and Derivatives

1. Alexander Wacker Gesellschaft fur electrochemische Industrie G.m.b.H. Recovering sulfur from used gas-purifying masses. Brit. patent 508,966. July 7, 1939.

2. Bonner, L. C. Treating gas purifier. British patent 10,780. May 1, 1914.

3. Every, R. L. and Grimsley, R. L. to Continental Oil Co. Preparing dispersable sulfur. U. S. patent 3,318,666.

4. Genther et Franke. Extraction of sulfur. French patent 377,824. May 15, 1907.

5. Muszkat, K. Production of free sulfur from hydrogen sulfide-absorbing materials in the Warsaw Gas Works. Gas i Woda 17, pp. 235-8 (1937).

6. Roga, B. Gas purification masses as a source for the recovery of sulfur. Przeglad Gorniczo-Hutniczy 30, pp. 432-6 (1938).

7. Simpson, C. H. Extraction of sulfur from material containing elemental sulfur. U. S. patent 3,063,817. Nov. 13, 1962.

8. Stobe, R. Reclaiming sulfur from the mass used for gas purification. German patent 708,031. June 5, 1941.

C. Aromatic Solvents

1. Anon. Recovery of the sulfur from spent oxide. Gas World 57, 197 (1912).

2. Becigneul, J. Obtaining sulfur from gas-purifying materials. U. S. patent 833,573. (1907).

*3. Bradley, G. W. and Barritt, D. T. Sulfur. British patent 724,119. Feb. 16, 1955.

4. Germogenova, E. V. Utilization of mixed solvents for the extraction of sulfur from sulfur ores. Mineral. Syr'e 1937, no. 5, pp. 28-35.

5. Herold, P. to I. G. Farbenind. A.-G. Purifying coke-oven gases, etc. German patent 570,448. Sept. 26, 1928.

6. Hunt, E. J. and Glidden, W. T. Recovering sulfur from tarry spent oxide. U. S. patent 105,996. April 29, 1913.

7. Jaeger, A. Sulfur extraction from spent gas-purification using tetralin (and low temp. tar oils). Brennstoff Chem. 3, p. 356 (1922).

8. Katewinkle, R. Recovery of sulfur from spent oxide by means of tetralin. Brennstoff Chem. 3, pp. 310-1 (1922).

9. Kuster, O. R. to Lummus Co. Continuous countercurrent crystallization. U. S. patent 3,337,307. Aug. 22, 1967.

*10. Prchlik, J.; Hlinak, L. and Kartakova, C. D. Recovery of sulfur from spent gas works purification mass. Paliva 34, pp. 298-305 (1954).

11. Rosen, R. to Standard Oil Dev. Co. Removal and recovery of free sulfur from gas-purification materials, etc. U. S. patent 2,195,870.

12. Soc. d Eclairage, Chauffage et Force Matrice. Removing sulfur and nitrogen from exhausted gas-purifying masses. French patent 454,990.

13. Suru, J. The desulfurization of gases. Technikai Kurir 8, pp. 31-2 (1937).

14. Weil, J. A. to Imperial Industries Ltd. Sulfur. British patent 561,370. May 17, 1944.

15. Wohlwill, M. to Metallgesellschaft Akt.-Ges. Reclaiming sulfur from gases. German patent 707,132. May 15, 1941.

D. Organic Sulfur Compounds

1. Anderson, W. Cyanogen compounds; sulfur. British patent 127,128. June 15, 1918.

2. Capell, R. G.; Wright, J. H. and Cruse, Wm. A. to Gulf Research and Dev. Co. Recovery of elemental sulfur from sulfur-bearing solid mineral matter. U. S. patent 2,897,065. July 28, 1959.

3. Chemische Fabrik Phonix, Rohleder and Co. Recovery of sulfur from extracts of gas-purifying masses. German patent 182,820. Nov. 16, 1905.

4. Deal, Carl H. and Papadopoulos, M. N. to Shell Oil Co. Removal of sulfur-containing gases from gaseous mixtures. U. S. patent 3,363,989. Jan. 16, 1968.

*5. Potsdamer, L. S. Notes on sodium prussiate. J. Ind. Eng. Chem., 11, pp. 769-70 (1919).

6. Strauss, F. to Gottfried Bischoff K.-G. Extraction of sulfur-containing materials. German patent 1,147,566. Apr. 25, 1963.

7. Strauss, F. to Gottfried Bischoff K.-G. Recovery of sulfur from gas purification masses. German patent 1,131,192. June 14, 1962.

E. Other Organic Solvents

1. Johnson, E. J. A theory of fluidization and its application to sulfur recovery by solvent extraction. Inst. Gas Engrs. Publication no. 378 (a), 39 pp. (1950).

2. Murphy, E. J. Removal of sulfur from spent oxide. J. Gas Lighting 136, pp. 396, pp. 396-7 (1916).

3. Sawa, M. to Nittetsu Mining Co., Ltd. Crystallization of sulfur in solvent refining. Japan patent 6318,207. Sept. 14, 1963.

III. USE OF ACTIVE CARBON IN SULFUR RECOVERY FROM GASES

1. Bakes, W. E.; King, J. G. and Sinnat, F. S. Sulfur compounds in water gas and their removal. Dept. Sci. Ind. Research, Fuel Research, Tech. Paper 31, 35 pp. (1931).

2. Braeuer, H. W.; Rogge, K. Natural gas refining by desulfurization with active charcoal. Erdoel, Erdgas Z. 1967, 83(5), pp. 170-8.

3. Brychta, M. Separation of sulfur from Lurgi generator gas. Paliva 36, pp. 391-9 (1956).

4. Carbonisation et charbons actifs. Desulfurizing gases. British patent 479,410. Feb. 4, 1938.

5. Englehardt, A. Use of active materials at coke ovens and gasworks. Glukauf 73, pp. 925-33 (1937).

*6. Fischer, F. and Kloeckner, L. New method for the purification of viscose exhaust air. Wasser, Luft Betr. 10(12), pp. 833-5 (1966).

*7. Grantham, L. F.; Larsen, C. M. to N. American Rockwell Corp. Sulfur production from flue gases. U. S. patent 3,438,733.

8. Griffiths, H. Activated carbons-modern applications for adsorptive processes. Chem. Trade J. 96, pp. 235-6 (1935).

9. Hoffman, Th. New methods and goals in desulfurizing illuminating gas. Chem. App. 16, 61-63, 120-1 (1929).

10. Hollings, H. and Evans, E. V. Report on removal of sulfur compounds from town gas down to 10 grains per 100 cubic feet. Institute of Gas Engrs. Pub. no. 146/43, 21 pp. (1936).

11. Knauf, G. Application of activated carbon for sulfur removal in gas purification. Energietechnik 1968, 17 (11), pp. 485-8.

*(T)12. Koenigstuhl, M. D. Extraction of sulfur from the hydrogen sulfide of coke-oven and other gases by means of activated charcoal. Coke and Chem. (U.S.S.R.) 1932, no. 7, pp. 32-7.

13. Kostrikov, V. I.; Keltsev, N. V., and Nivin, P. I. Use of one sorbent to remove both hydrogen sulfide and carbon disulfide from rayon-industry waste gases. Khim. Volokna 1968(2).

14. Krczil, F. Catalytic oxidation of hydrogen sulfide in presence of active carbon. Chem.-Ztg. 61, pp. 247-8, 249, 267-8, 269-70 (1937).

15. Metallgesellschaft A-G. Removal of hydrogen sulfide from gas mixtures. French patent 1,388,453. Feb. 5, 1965.

16. Neuwirth, F. Desulfurization of gas with Koflach lignite charcoal. Berg-u. Huttenmann. Jahrb., 76, pp. 1-13(1928).

17. Stanisz, Z. Regeneration of sulfur from gases by means of activated charcoal. Przeglad Chem. 2, pp. 530-1 (1938).

18. Thoma, M. Fine purification of gas. Schweiz, Ver. Gas-u. Wasserfach., Monats-Bull. 16, pp. 257-68(1936).

19. Todd, E. W. Removal of sulfur from illuminating gas by activated carbon. Nova Scotian Inst. Sci., 17, Pt. 2, pp. 12-3 (1928).

20. Visconti, Y. S. Obtaining elementary sulfur. Rev. brasil. quim. (Sao Paulo) 22, pp. 415-18(1946).

*(T)21. Waeser, B. Desulfurizing gases. Chem.-Ztg. 52, pp. 617-8, 638-40, 658-9 (1928).

IV. SOLVENT EXTRACTION OF SULFUR FROM CARBON

A. Ammonium Sulfide

*1. Comm. on Gas Mfg. of the Assoc. Technique. Gas purification by activated carbon and recovery of sulfur in the solid form. Gas Journal, 184, pp. 526-7 (1928).

*(T)2. Egorov, N. N., et al. Purification of gases with activated carbon. Chapter IV, pp. 37-47 of "Removal of Sulfur from Coke-Oven and Other Fuel Gases," Moscow, 1950.

*(T)3. Engelhardt, A. The use of active charcoal in the gas industry. Gas-u. Wasserfach 71, pp. 290-7 (1928).

4. Evans, K.; Pearson, H. F., and Reisemann, E. Industrial Applications of Active Carbon. Trans. Inst. Chem. Eng., Dec. 6, 1929, pp. 62-83.

5. Gouthiere and Co., and Ducanel, P. Recovery of sulfur from used gas-purifying masses. Ger. Patent 245,570. July 14, 1910.

6. Kazarnovskii, S. and Pisarev, K. The purification of gases from hydrogen sulfide by oxidation on activated charcoal. J. Chem. Ind. (Moscow) 12, pp. 913-21 (1931).

7. Prchlik, J. Removal of active carbon of sulfur from waste gases obtained during production of town gas in the Lurgi generator. Prace Ustavu Vyzkum Paliv 1963(6), pp. 138-50.

8. Reichert, O. and Stemmler, H. to Spinnfaser Akt.-Ges. Recovery of sulfur from activated filter charcoal. Ger. patent 1,054,655. April 9, 1959.

*(T)9. Spechal, W. Sulfur removal from synthesis blue gas by active charcoal. Gas-u-Wasserfach 94, pp. 679-84 (1953).

10. Szilagyi, I. Method to purify and to remove sulfur from the raw gases produced from lignite. Magyar Kem. Lapja 4, pp. 24-5 (1949).

11. Tyulyukov, A. and Khronova, M. The purification of gases containing hydrogen sulfide by active charcoal. J. Chem. Ind. (U.S.S.R.) 12, pp. 247-54 (1935).

12. Zel'venskii, Ya. D. and Volkov, A. E. Gas purification from hydrogen sulfide by oxidation on active carbon. Trudy Gosudarst. Nauch.-Issledovatel. i Proekt. Inst. Azot. Prom. 1952, no. 1, pp. 131-8 (1953).

B. Organic Solvents

1. Becigneul, J. J. M. Extracting sulfur from spent gas-purifying materials. Brit. patent 9,800.

*2. Braeuer, H. W. and Fischer, F. Recovery of carbon disulfide with simultaneous removal of hydrogen sulfide. DECHEMA monograph 1968, 59(1045-1069), 173-89.

3. Brychta, M. Desulfurizing coke-oven gas by activated carbon. Prace Ustavu Vyzkum Palio 1962(4), pp. 169-232.

4. Cornillaux. Extracting and purifying sulfur. French patent 353,932, March 25, 1905.

*5. Fischer, F. and Kloecker, L. to Pintsch Bamag A.-G. Process of regenerating activated carbon saturated with hydrogen sulfide and an organic solvent present in exhaust air or oxygen-containing gases. German patent 1,259,845, Feb. 1, 1968.

*6. Riedl, R.; Brychta, M., and Praskova, D. Regeneration of spent activated charcoal used for the adsorption of hydrogen sulfide from pressure gas by toluene and xylene. Sv. Vysoke Skoly Chem.-Technol. Praze, Oddil Fak. Technol. Paliv Vody 3, no. 1, 5-34 (1959).

*7. Schreiber, F. Use of tetralin in sulfur recovery from active charcoal used for gas purification. Brennstoff-Chem., 3, pp. 355-6 (1922).

APPENDIX A-15

SO_2 ACTIVITY AND PORE VOLUME DETERMINATION OF SOLVENT EXTRACTED CARBON

		Page
1.	SO_2 Activity of Solvent Extracted Carbon	399
2.	Surface Area and Pore Volume Distribution of Solvent Extracted Carbon	420

APPENDIX A-15-1

SO_2 ACTIVITY OF SOLVENT EXTRACTED CARBON

GRAVIMETRIC FLOW EXPERIMENTS

Run:	120-G	NO:	0 ppm	F_t:	1500 cc/min.
Dry Weight:	95.02 mg.	O_2:	3.5%	% H_2SO_4:	76.66
Deflection:	-2.53 mg.	H_2O:	6%	Correction:	0.5007
SO_2:	2000 ppm	t:	200°F	Date:	March 23, 1971
Carbon:	EXV-1				

Time minutes	Load mg. H_2SO_4/g. C
1	6.57
2	8.86
3	10.63
4	11.99
5	13.34
6	14.80
7	16.26
8	17.83
9	19.50
10	21.37
11	23.04
12	24.92
13	26.69
14	28.67
15	30.65
16	32.74
17	34.82
18	36.80
19	38.99
20	41.18
21	43.27
22	45.45
23	47.96
24	50.25
25	52.65
26	54.94
27	57.44
28	60.05
29	62.55
30	65.05
32	69.85
34	75.06
36	79.86
38	84.97
40	89.97
42	94.97
44	100.08
46	105.19
48	110.51
50	115.62
52	120.52
54	125.73
56	130.94
58	136.05
60	141.26
65	153.26
70	165.24

Mean Load mg. H_2SO_4/g. C	Rate mg. H_2SO_4/g. C/min.
4	4.9520
6	3.5446
8	2.4395
10	1.6681
12	1.3553
14	1.4283
16	1.5325
18	1.6264
20	1.7098
25	1.8766
30	1.9912
35	2.0955
40	2.1789
45	2.2623
50	2.3249
55	2.3874
60	2.4291
65	2.4708
70	2.5021
75	2.5334
80	2.5542
85	2.5751
90	2.5959
95	2.6063
100	2.6063
110	2.6063
120	2.6063
130	2.5959
140	2.5646
150	2.5229
160	2.4917
170	2.4500
180	2.3978
190	2.3353
200	2.2623
220	2.1268
240	1.9808
260	1.8140
280	1.6785
300	1.5221
320	1.3866
340	1.2198
360	1.0530
380	0.8862

(CONTINUED FROM PREVIOUS PAGE)

Run:	129-G	NO:	0 ppm	F_t:	1500 cc/min.
Dry Weight:	95.92 mg.	O_2:	3.5%	% H_2SO_4:	76.66
Deflection:	-2.53 mg.	H_2O:	6%	Correction:	0.5007
SO_2:	2000 ppm	t:	200°F	Date:	March 23, 1971
Carbon:	EXV-1				

Time minutes	Load mg. H_2SO_4/g. C
75	177.13
80	188.70
85	200.17
90	211.53
95	222.58
100	233.11
105	243.12
110	252.92
115	261.78
120	270.54
125	278.77
130	286.80
135	294.41
140	301.40
145	308.38
150	315.16
155	321.52
160	327.88
165	334.24
170	340.60
175	346.64
180	352.90
185	358.53
190	364.16
195	369.58
200	374.90
205	378.38
210	383.55
215	387.51
220	391.37

GRAVIMETRIC FLOW EXPERIMENTS

Run:	130-G	NO:	0 ppm	F_t:	1500 cc/min.
Dry Weight:	101.74 mg.	O_2:	3.5%	% H_2SO_4:	76.86
Deflection:	-2.55 mg.	H_2O:	6%	Correction:	0.5019
SO_2:	2000 ppm	t:	200°F	Date:	March 24, 1971
Carbon:	EXB-1				

Time minutes	Load mg. H_2SO_4/g. C
1	5.11
2	5.90
3	6.39
4	6.88
5	7.37
6	7.76
7	8.16
8	8.45
9	8.85
10	9.24
12	9.93
14	10.52
16	11.21
18	11.89
20	12.68
22	13.37
24	14.15
26	14.84
28	15.73
30	16.51
35	18.58
40	20.74
45	22.90
50	25.16
55	27.42
60	29.98
65	32.04
70	35.29
75	37.84
80	40.59
85	43.44
90	46.29
95	49.34
100	52.29
110	58.48
120	64.97
130	71.95
140	79.12
150	86.30
160	93.28
170	100.65
180	108.12
190	115.49
200	122.76
210	129.64
220	136.52
230	143.40
240	150.09
250	156.67
260	162.77
270	168.96
280	174.96
290	180.36
300	185.77
310	191.17
320	196.28
330	201.30

Mean Load mg. H_2SO_4/g. C	Rate mg. H_2SO_4/g. C/min.
4	3.4893
6	0.5897
8	0.3440
10	0.3244
12	0.3342
14	0.3440
16	0.3637
18	0.3833
20	0.4128
25	0.4521
30	0.4914
35	0.5308
40	0.5701
45	0.5996
50	0.6291
55	0.6487
60	0.6684
65	0.6880
70	0.6979
75	0.7077
80	0.7175
85	0.7175
90	0.7273
95	0.7273
100	0.7273
110	0.7175
120	0.7077
130	0.6979
140	0.6684
150	0.6487
160	0.6291
170	0.5996
180	0.5701
190	0.5406
200	0.5013

GRAVIMETRIC FLOW EXPERIMENTS

Run:	131-G	NO:	0 ppm	F_t:	1500 cc/min.
Dry Weight:	102.52 mg.	O_2:	3.5%	% H_2SO_4:	74.29
Deflection:	-2.45 mg.	H_2O:	6%	Correction:	0.4851
SO_2:	2000 ppm	t:	200°F	Date:	March 25, 1971
Carbon:	EXV-2B				

Time minutes	Load mg. H_2SO_4/g. C
1	7.61
2	8.78
3	9.36
4	9.85
5	10.44
6	10.92
7	11.51
8	12.10
9	12.58
10	13.17
12	14.14
14	15.12
16	16.19
18	17.17
20	18.34
22	19.51
24	20.58
26	21.85
28	23.02
30	24.29
35	27.41
40	30.63
45	34.04
50	37.65
55	40.97
60	44.58
65	48.28
70	52.09
75	55.79
80	59.70
85	63.89
90	68.18
95	72.47
100	76.96
110	86.32
120	95.79
130	105.35
140	115.49
150	125.44
160	135.97
170	146.31
180	156.26
190	165.82
200	174.70
210	183.38
220	191.57
230	199.57
240	207.76
250	215.57
260	222.98
270	230.10
280	236.83
290	243.27
300	249.41
310	255.56
320	261.41
330	266.68

Mean Load mg. H_2SO_4/g. C	Rate mg. H_2SO_4/g. C/min.
4	7.5595
6	4.8771
8	1.7070
10	0.5365
12	0.5365
14	0.5462
16	0.5560
18	0.5657
20	0.5755
25	0.6145
30	0.6438
35	0.6730
40	0.7121
45	0.7413
50	0.7803
55	0.8096
60	0.8389
65	0.8681
70	0.8974
75	0.9169
80	0.9364
85	0.9559
90	0.9657
95	0.9852
100	0.9949
110	1.0144
120	1.0242
130	1.0242
140	1.0242
150	1.0047
160	0.9754
170	0.9462
180	0.9071
190	0.8681
200	0.8194
220	0.7316
240	0.6438
260	0.5462

Run:	142-G	NO:	0 ppm	F_t:	1500 cc/min.
Dry Weight:	101.90 mg.	O_2:	3.5%	% H_2SO_4:	72.06
Deflection:	-2.74 mg.	H_2O:	6%	Correction:	0.4706
SO_2:	2000 ppm	t:	200° F	Date:	March 30, 1971
Carbon:	EXB-2				

Time minutes	Load mg. H_2SO_4/g. C
1	8.44
2	9.13
3	9.52
4	9.81
5	10.40
6	10.79
7	11.09
8	11.38
9	11.68
10	11.97
12	12.56
14	13.25
16	13.94
18	14.62
20	15.21
22	15.90
24	16.68
26	17.27
28	18.06
30	18.84
35	20.71
40	22.67
45	24.63
50	26.59
55	28.56
60	30.52
65	32.58
70	34.74
75	36.80
80	38.96
85	41.22
90	43.57
95	45.83
100	48.18
110	53.10
120	58.39
130	63.79
140	69.28
150	74.98
160	80.86
170	86.75
180	92.64
190	98.53
200	104.82
210	109.91
220	115.31
230	120.90
240	126.50
250	132.38
260	137.98
270	143.38
280	148.97

Mean Load mg. H_2SO_4/g. C	Rate mg. H_2SO_4/g. C/min.
4	8.6850
6	5.6919
8	2.3553
10	0.3925
12	0.3435
14	0.3435
16	0.3435
18	0.3533
20	0.3631
25	0.3925
30	0.4220
35	0.4416
40	0.4612
45	0.4809
50	0.5005
55	0.5201
60	0.5299
65	0.5397
70	0.5496
75	0.5594
80	0.5692
85	0.5790
90	0.5888
95	0.5888
100	0.5888
110	0.5888
120	0.5888
130	0.5790
140	0.5692

GRAVIMETRIC FLOW EXPERIMENTS

Run:	134-G	NO:	0 ppm	F_t:	1500 cc/min.
Dry Weight:	99.98 mg.	O_2:	3.5%	% H_2SO_4:	74.77
Deflection:	-2.83 mg.	H_2O:	6%	Correction:	0.4883
SO_2:	2000 ppm	t:	200°F	Date:	April 12, 1971
Carbon:	EXV-2C				

Time minutes	Load mg. H_2SO_4/g. C
1	12.40
2	13.90
3	14.90
4	15.90
5	16.90
6	17.90
7	18.80
8	19.80
9	20.80
10	21.90
12	23.90
14	25.91
16	27.91
18	29.91
20	31.91
25	37.11
30	42.31
35	47.71
40	53.01
45	58.61
50	64.31
55	70.11
60	76.02
65	81.92
70	88.02
75	93.92
80	99.82
85	105.92
90	111.92
95	118.12
100	124.12
110	135.93
120	147.53
130	158.83
140	169.93
150	180.94
160	191.64
170	201.94
180	211.94
190	221.54
200	230.85
210	239.85
220	248.15
230	256.45
240	264.45
250	272.05
260	279.16
270	285.96
280	292.66
290	299.16
300	305.26

Mean Load mg. H_2SO_4/g. C	Rate mg. H_2SO_4/g. C/min.
6	12.2525
8	9.5019
10	6.7514
12	3.4507
14	1.1002
16	1.0002
18	0.9902
20	0.9902
25	1.0102
30	1.0402
35	1.0602
40	1.0802
45	1.1002
50	1.1202
55	1.1302
60	1.1502
65	1.1602
70	1.1802
75	1.1902
80	1.2002
85	1.2002
90	1.2102
95	1.2102
100	1.2102
110	1.2102
120	1.2102
130	1.2002
140	1.1902
150	1.1602
160	1.1402
170	1.1102
180	1.0902
190	1.0502
200	1.0202
220	0.9502
240	0.8702
260	0.8002
280	0.7101
300	0.6201

GRAVIMETRIC FLOW EXPERIMENTS

Run:	146-G	NO:	0 ppm	F_t:	1500 cc/min.
Dry Weight:	100.14 mg.	O_2:	3.55	% H_2SO_4:	77.04
Deflection:	-5.53 mg.	H_2O:	6%	Correction:	0.5031
SO_2:	2000 ppm	t:	200°F	Date:	May 4, 1971
Carbon:	EXV-3B				

Time minutes	Load mg. H_2SO_4/g. C
1	6.09
2	7.39
3	8.29
4	9.19
5	10.19
6	11.08
7	12.08
8	13.08
9	14.08
10	15.08
12	17.28
14	19.47
16	21.77
18	24.07
20	26.46
25	32.75
30	39.74
35	47.23
40	55.12
45	63.41
50	71.50
55	79.79
60	88.18
65	96.56
70	105.25
75	113.74
80	122.13
85	130.42
90	138.51
95	146.69
100	154.38
110	169.66
120	184.14
130	197.82
140	210.80
150	223.19
160	235.17
170	246.45
180	257.04
190	267.03
200	276.21
210	284.70
220	292.99
230	299.68
240	307.97

Mean Load mg. H_2SO_4/g. C	Rate mg. H_2SO_4/g. C/min.
4	4.9930
6	2.6962
8	0.9287
10	0.9287
12	0.9686
14	1.0086
16	1.0585
18	1.1035
20	1.1434
25	1.2383
30	1.3182
35	1.3881
40	1.4530
45	1.5029
50	1.5428
55	1.5778
60	1.6127
65	1.6327
70	1.6527
75	1.6677
80	1.6777
85	1.6926
90	1.6976
95	1.7026
100	1.7026
110	1.6976
120	1.6876
130	1.6677
140	1.6377
150	1.6028
160	1.5528
170	1.5029
180	1.4480
190	1.3980
200	1.3431
220	1.2283
240	1.1184
260	1.0036
280	0.8838
300	0.7639

GRAVIMETRIC FLOW EXPERIMENTS

Run:	147-G	NO:	0 ppm	F_t:	1500 cc/min.
Dry Weight:	103.3 mg.	O_2:	3.5%	% H_2SO_4:	76.11
Deflection:	-5.26 mg.	H_2O:	6%	Correction:	0.4970
SO_2:	2000 ppm	t:	200°F	Date:	May 6, 1970
Carbon:	EXB-2				

Time minutes	Load mg. H_2SO_4/g. C
1	4.26
2	5.52
3	6.29
4	6.97
5	7.65
6	8.23
7	8.81
8	9.49
9	10.07
10	10.74
12	12.00
14	13.36
16	14.81
18	16.16
20	17.62
25	21.20
30	24.97
35	28.94
40	32.81
45	37.07
50	41.62
55	46.46
60	51.78
65	57.10
70	62.62
75	68.23
80	74.14
85	80.33
90	86.53
95	92.82
100	99.21
110	112.27
120	125.82
130	138.99
140	151.86
150	164.44
160	176.44
170	188.39
180	199.86
190	211.19
200	222.13
210	232.68
220	243.03
230	253.19
240	262.49

Mean Load mg. H_2SO_4/g. C	Rate mg. H_2SO_4/g. C/min.
2	4.3554
4	2.4003
6	0.7743
8	0.6775
10	0.6581
12	0.6581
14	0.6630
16	0.6727
18	0.6872
20	0.7065
25	0.7598
30	0.8227
35	0.8808
40	0.9388
45	0.9872
50	1.0308
55	1.0743
60	1.1130
65	1.1518
70	1.1905
75	1.2292
80	1.2485
85	1.2679
90	1.2873
95	1.2969
100	1.3066
110	1.3163
120	1.3163
130	1.3066
140	1.2969
150	1.2776
160	1.2582
170	1.2389
180	1.2098
190	1.1808
200	1.1518
220	1.0889
240	1.0163
260	0.9485

GRAVIMETRIC FLOW EXPERIMENTS

Run:	154-G	NO:	0 ppm	F_t:	1500 cc/min.
Dry Weight:	117.04 mg.	O_2:	3.5%	$\%^t H_2SO_4$:	71.24
Deflection:	-5.53 mg.	H_2O:	6%	Correction:	0.4652
SO_2:	2000 ppm	t:	200°F	Date:	May 26, 1971
Carbon:	EXA-1				

Time minutes	Load mg. H_2SO_4/g. C
1	0.17
2	0.34
3	0.60
4	0.77
5	0.94
6	1.11
7	1.37
8	1.54
9	1.79
10	1.97
12	2.31
14	2.73
16	3.08
18	3.42
20	3.67
25	4.53
30	5.30
35	6.07
40	6.75
45	7.43
50	8.03
60	9.31
70	10.42
80	11.53
90	12.65
100	13.67
110	14.70
120	15.59
130	16.32
140	17.09
150	17.69
160	18.37
170	19.22
180	20.25
190	21.36
200	22.73
210	24.18
220	25.72
230	27.17
240	28.96
250	30.50
260	32.38
270	34.18
280	36.06
290	37.94
300	39.82

Mean Load mg. H_2SO_4/g. C	Rate mg. H_2SO_4/g. C/min.
2	0.2153
4	0.1692
6	0.1393
8	0.1256
10	0.1128
12	0.1008
14	0.0897
16	0.0795
18	0.0880
20	0.1094
22	0.1282
24	0.1427
26	0.1521
28	0.1623
30	0.1692
32	0.1777
34	0.1837
36	0.1897
38	0.1931
40	0.1965

GRAVIMETRIC FLOW EXPERIMENTS

Run:	155-G	NO:	0 ppm	F_t:	1500 cc/min.
Dry Weight:	108.52 mg.	O_2:	3.5%	% H_2SO_4:	76.99
Deflection:	-5.85 mg.	H_2O:	6%	Correction:	0.5028
SO_2:	2000 ppm	t:	200°F	Date:	May 27, 1971
Carbon:	EXB-3				

Time minutes	Load mg. H_2SO_4/g. C
1	3.87
2	4.88
3	5.62
4	6.36
5	7.10
6	7.83
7	8.57
8	9.31
9	10.04
10	10.78
12	12.35
14	13.91
16	15.57
18	17.23
20	18.89
25	23.41
30	28.20
35	33.27
40	38.89
45	45.06
50	51.33
55	57.96
60	64.41
65	70.77
70	77.22
75	83.76
80	91.23
85	98.51
90	105.79
95	113.16
100	120.53
110	135.09
120	149.37
130	163.38
140	177.29
150	191.95
160	206.04
170	219.68
180	232.58
190	244.66
200	255.90
210	266.68
220	277.00
230	286.93
240	296.17
250	304.92
260	313.21
270	320.95
280	328.05
290	334.96
300	342.06

Mean Load mg. H_2SO_4/g. C	Rate mg. H_2SO_4/g. C/min.
2	3.8703
4	1.9812
6	0.7925
8	0.7464
10	0.7648
12	0.7833
14	0.8109
16	0.8386
18	0.8662
20	0.8938
25	0.9583
30	1.0229
35	1.0781
40	1.1242
45	1.1703
50	1.2072
55	1.2440
60	1.2809
65	1.3085
70	1.3362
75	1.3638
80	1.3822
85	1.4007
90	1.4191
95	1.4375
100	1.4467
110	1.4652
120	1.4744
130	1.4744
140	1.4652
150	1.4560
160	1.4375
170	1.4099
180	1.3914
190	1.3638
200	1.3362
220	1.2624
240	1.1887
260	1.1058
280	1.0136
300	0.9031
320	0.8017
340	0.6911

G R A V I M E T R I C F L O W E X P E R I M E N T S

Run:	196-G	NO:	0 ppm	F_t:	1500 cc/min.
Dry Weight:	103.60 mg.	O_2:	3.5%	% H_2SO_4:	75.15
Deflection:	-9.90 mg.	H_2O:	6%	Correction:	0.4908
SO_2:	2000 ppm	t:	200°F	Date:	May 28, 1971
Carbon:	EXC-1				

Time minutes	Load mg. H_2SO_4/g. C
1	9.27
2	10.42
3	11.29
4	12.16
5	12.93
6	13.80
7	14.67
8	15.44
9	16.31
10	17.18
12	18.82
14	20.66
16	22.39
18	24.13
20	25.97
25	30.60
30	35.52
35	40.64
40	46.14
45	51.74
50	57.53
55	63.51
60	69.50
65	75.68
70	81.76
75	88.03
80	94.21
85	100.39
90	106.56
95	112.84
100	119.11
110	131.18
120	142.95
130	154.44
140	165.64
150	176.45
160	186.97
170	197.10
180	20[illegible].66
190	215.94
200	225.13
210	232.53
220	240.83
230	248.65
240	256.18
250	[illegible]
260	270.27
270	276.03
280	283.80
290	289.48
300	295.17

Mean Load mg. H_2SO_4/g. C	Rate mg. H_2SO_4/g. C/min.
6	7.1429
8	4.1988
10	1.1390
12	0.8687
14	0.8301
16	0.8398
18	0.8591
20	0.8784
25	0.9266
30	0.9749
35	1.0232
40	1.0714
45	1.1004
50	1.1293
55	1.1583
60	1.1873
65	1.1969
70	1.2162
75	1.2259
80	1.2355
85	1.2355
90	1.2355
95	1.2355
100	1.2355
110	1.2259
120	1.2162
130	1.1969
140	1.1680
150	1.1486
160	1.1197
170	1.0907
180	1.0618
190	1.0232
200	0.9942
220	0.9170
240	0.8301
260	0.7432
280	0.6371

G R A V I M E T R I C F L O W E X P E R I M E N T S

Run:	159-G	NO:	0 ppm	F_t:	1500 cc/min.
Dry Weight:	102.26 mg.	O_2:	3.5%	% H_2SO_4:	79.44
Deflection:	-5.93 mg.	H_2O:	6%	Correction:	0.5188
SO_2:	2000 ppm	t:	200°F	Date:	June 7, 1971
Carbon:	EXA-2				

Time minutes	Load mg. H_2SO_4/g. C
1	2.64
2	3.52
3	3.91
4	4.20
5	4.50
6	4.69
7	4.89
8	5.09
9	5.28
10	5.38
12	5.67
14	5.97
16	6.26
18	6.55
20	6.75
25	7.53
30	8.31
35	9.00
40	9.68
45	10.37
50	11.05
60	12.52
70	13.89
80	15.45
90	16.92
100	18.48
110	19.95
120	21.51
130	23.08
140	24.64
150	26.31
160	27.87
170	29.73
180	31.39
190	33.15
200	34.91
210	36.77
220	38.63
230	40.58
240	42.54
250	44.50
260	46.74
270	48.89
280	51.24
290	53.69
300	56.13

Mean Load mg. H_2SO_4/g. C	Rate mg. H_2SO_4/g. C/min.
4	0.3071
6	0.1604
8	0.1408
10	0.1418
12	0.1438
14	0.1457
16	0.1486
18	0.1516
20	0.1555
25	0.1633
30	0.1741
35	0.1868
40	0.2005
45	0.2151
50	0.2318
55	0.2494

GRAVIMETRIC FLOW EXPERIMENTS

Run:	165-G	NO:	0 ppm	F_t:	1500 cc/min.
Dry Weight:	106.92 mg.	O_2:	3.5%	% H_2SO_4:	77.85
Deflection:	-5.97 mg.	H_2O:	6%	Correction:	0.5084
SO_2:	2000 ppm	t:	200°F	Date:	June 16, 1971
Carbon:	EXA-3				

Time minutes	Load mg. H_2SO_4/g. C
1	4.12
2	6.08
3	7.48
4	8.60
5	9.63
6	10.57
7	11.50
8	12.44
9	13.28
10	14.22
12	15.62
14	17.02
16	18.33
18	19.73
20	21.23
25	25.16
30	29.09
35	33.20
40	37.60
45	42.18
50	46.95
60	56.96
70	67.71
80	79.12
90	91.66
100	104.00
110	116.35
120	129.35
130	142.26
140	154.98
150	166.85
160	178.17
170	189.86
180	201.27
190	212.12
200	222.78
210	232.98
220	242.70
230	251.46
240	260.48
250	268.80
260	276.56
270	283.56
280	290.63
290	297.14
300	303.40
310	309.48
320	316.03
330	321.74

Mean Load mg. H_2SO_4/g. C	Rate mg. H_2SO_4/g. C/min.
2	4.2088
4	2.5907
6	1.6835
8	1.1785
10	0.9727
12	0.8605
14	0.7669
16	0.7202
18	0.7108
20	0.7295
25	0.7856
30	0.8230
35	0.8698
40	0.9166
45	0.9540
50	1.0007
55	1.0382
60	1.0756
65	1.1130
70	1.1504
75	1.1785
80	1.2065
85	1.2252
90	1.2439
95	1.2533
100	1.2626
110	1.2813
120	1.2813
130	1.2720
140	1.2626
150	1.2439
160	1.2252
170	1.1972
180	1.1691
190	1.1504
200	1.1130
220	1.0382
240	0.9540
260	0.8605
280	0.7669
300	0.6640
320	0.5612

GRAVIMETRIC FLOW EXPERIMENTS

Run:	166-G	NO:	0 ppm	Ft:	1500 cc/min.
Dry Weight:	101.36 mg.	O_2:	3.5%	% H_2SO_4:	77.20
Deflection:	-6.09 mg.	H_2O:	6%	Correction:	0.5042
SO_2:	2000 ppm	t:	200°F	Date:	June 21, 1971
Carbon:	EXA-4				

Time minutes	Load mg. H_2SO_4/g. C
1	4.04
2	5.82
3	7.20
4	8.29
5	9.27
6	10.26
7	11.25
8	12.33
9	13.32
10	14.31
12	16.18
14	18.15
16	19.93
18	21.80
20	23.78
25	28.12
30	32.66
35	37.19
40	41.83
45	46.47
50	51.30
60	61.76
70	73.01
80	84.55
90	96.98
100	110.00
110	122.93
120	135.06
130	147.40
140	159.83
150	172.36
160	184.19
170	195.74
180	206.39
190	216.55
200	226.32
210	235.79
220	244.87
230	253.85
240	262.04
250	269.83
260	277.43
270	284.63
280	291.54
290	298.15
300	304.66

Mean Load mg. H_2SO_4/g. c	Rate mg. H_2SO_4/g. C/min.
2	4.0450
4	2.4862
6	1.6180
8	1.1346
10	1.0359
12	0.9767
14	0.9471
16	0.9373
18	0.9274
20	0.9175
25	0.9077
30	0.9126
35	0.9175
40	0.9422
45	0.9570
50	1.0014
55	1.0359
60	1.0754
65	1.1099
70	1.1444
75	1.1691
80	1.1938
85	1.2135
90	1.2332
95	1.2480
100	1.2579
110	1.2727
120	1.2727
130	1.2628
140	1.2579
150	1.2382
160	1.2184
170	1.1938
180	1.1642
190	1.1346
200	1.0951
220	1.0162
240	0.9274
260	0.8287
280	0.7202
300	0.6215

GRAVIMETRIC FLOW EXPERIMENTS

Run:	167-G	NO:	0 ppm	F_t:	1500 cc/min.
Dry Weight:	107.14 mg.	O_2:	3.5%	% H_2SO_4:	77.51
Deflection:	-5.99 mg.	H_2O:	6%	Correction:	0.5062
SO_2:	2000 ppm	t:	200°F	Date:	June 23, 1971
Carbon:	EXA-5				

Time minutes	Load mg. H_2SO_4/g. C
1	3.17
2	4.67
3	5.69
4	6.53
5	7.37
6	8.12
7	8.87
8	9.52
9	10.17
10	10.83
12	12.13
14	13.44
16	14.75
18	16.15
20	17.55
25	21.09
30	24.64
35	28.19
40	31.83
45	35.56
50	39.39
60	47.23
70	55.44
80	64.60
90	74.30
100	84.66
110	95.30
120	106.40
130	117.51
140	128.62
150	139.54
160	150.64
170	161.56
180	172.58
190	183.22
200	193.21
210	202.91
220	212.53
230	221.95
240	231.10
250	239.97
260	248.83
270	257.51
280	264.89
290	272.07
300	278.39

Mean Load mg. H_2SO_4/g. C	Rate mg. H_2SO_4/g. C/min.
2	2.7067
4	1.6054
6	0.9520
8	0.7467
10	0.7000
12	0.6814
14	0.6720
16	0.6814
18	0.6860
20	0.6907
25	0.7094
30	0.7280
35	0.7560
40	0.7840
45	0.8167
50	0.8494
55	0.8867
60	0.9240
65	0.9614
70	0.9894
75	1.0080
80	1.0360
85	1.0500
90	1.0640
95	1.0780
100	1.0920
110	1.1060
120	1.1107
130	1.1107
140	1.1014
150	1.0920
160	1.0780
170	1.0594
180	1.0407
190	1.0174
200	0.9894
220	0.9334
240	0.8587
260	0.7840
280	0.7094

GRAVIMETRIC FLOW EXPERIMENTS

Run:	169-G	NO:	0 ppm	F_t:	1500 cc/min.
Dry Weight:	100.50 mg.	O_2:	3.5%	% H_2SO_4:	78.24
Deflection:	-5.91 mg.	H_2O:	6%	Correction:	0.51105
SO_2:	2000 ppm	t:	200° F	Date:	June 25, 1971
Carbon:	EXB-4				

Time minutes	Load mg. H_2SO_4/g. C
1	4.78
2	6.17
3	7.06
4	8.06
5	8.96
6	9.95
7	10.95
8	11.94
9	12.94
10	13.93
12	16.02
14	18.31
16	20.50
18	22.89
20	25.17
25	30.95
30	37.41
35	44.68
40	52.44
45	60.80
50	69.65
60	88.36
70	107.96
80	128.26
90	149.25
100	169.75
110	189.75
120	208.96
130	226.97
140	243.68
150	259.80
160	275.02
170	290.05
180	303.08
190	314.93
200	325.87
210	335.22
220	346.17
230	355.[illegible]2
240	364.[illegible]
250	372.24
260	379.00
270	387.16
280	394.43
290	401.20
300	407.76

Mean Load mg. H_2SO_4/g. C	Rate mg. H_2SO_4/g. C/min.
4	3.1841
6	1.2438
8	0.9254
10	0.9552
12	0.9751
14	1.0149
16	1.0348
18	1.0647
20	1.0945
25	1.1741
30	1.2637
35	1.3433
40	1.4229
45	1.4975
50	1.5672
55	1.6418
60	1.7015
65	1.7612
70	1.8109
75	1.8607
80	1.8905
85	1.9204
90	1.9602
95	1.9900
100	2.0100
110	2.0498
120	2.0697
130	2.0796
140	2.0796
150	2.0697
160	2.0597
170	2.0398
180	2.0000
190	1.9602
200	1.9104
220	1.79[illegible]0
240	1.6666
260	1.5622
280	1.4[illegible]
300	1.3[illegible]
320	1.1741
340	1.0448
360	0.9154
380	0.7711
400	0.6269

Run:	170-G	NO:	0 ppm	F_t:	1500 cc/min.
Dry Weight:	102.04 mg	O_2:	3.5%	% H_2SO_4:	78.47
Deflection:	-5.01 mg.	H_2O:	6%	Correction:	0.5124
SO_2:	2000 ppm	t:	200° F	Date:	June 28, 1971
Carbon:	EXB-5				

Time minutes	Load mg. H_2SO_4/g. C
1	4.19
2	6.33
3	7.79
4	8.87
5	9.94
6	11.01
7	12.08
8	13.06
9	13.93
10	14.71
12	16.56
14	18.61
16	20.65
18	22.90
20	25.23
25	31.18
30	37.61
35	44.72
40	52.51
45	60.80
50	69.66
60	88.56
70	108.73
80	129.87
90	150.14
100	170.01
110	188.91
120	206.55
130	223.79
140	240.55
150	256.63
160	271.04
170	284.10
180	296.89
190	307.00
200	315.00
210	323.53
220	333.07
230	346.65
240	364.15
250	381.46
260	393.15
270	376.01
280	351.04
290	337.23
300	393.12
310	403.87
320	404.03
330	409.00

Mean Load mg. H_2SO_4/g. C	Rate mg. H_2SO_4/g. C/min.
2	4.3843
4	2.7280
6	1.9680
8	1.4322
10	1.0035
12	0.9353
14	0.9256
16	0.9499
18	0.9840
20	1.0279
25	1.1448
30	1.2422
35	1.3396
40	1.4322
45	1.5101
50	1.5881
55	1.6660
60	1.7342
65	1.7927
70	1.8463
75	1.8950
80	1.9339
85	1.9729
90	1.9973
95	2.0216
100	2.0460
110	2.0703
120	2.0752
130	2.0703
140	2.0557
150	2.0216
160	1.9875
170	1.9486
180	1.9096
190	1.8706
200	1.8170
220	1.7050
240	1.5783
260	1.4371
280	1.2763
300	1.1204
320	0.9743
340	0.8379
360	0.7210
380	0.6089
400	0.5261

Run:	171-G	NO:	0 ppm	F_t:	1500 cc/min.
Dry Weight:	101.80 mg.	O_2:	3.5%	% H_2SO_4:	77.04
Deflection:	-6.22 mg.	H_2O:	6%	Correction:	0.5031
SO_2:	2000 ppm	t:	200°F	Date:	June 29, 1971
Carbon:	EXA-4				

Time minutes	Load mg. H_2SO_4/g. C
1	5.50
2	7.56
3	9.04
4	10.12
5	11.20
6	12.28
7	13.26
8	14.15
9	14.93
10	15.82
12	17.29
14	18.76
16	20.04
18	21.41
20	22.99
25	26.82
30	31.04
35	35.66
40	40.37
45	45.28
50	50.29
60	60.81
70	71.51
80	82.91
90	94.79
100	106.88
110	119.35
120	131.93
130	144.01
140	155.80
150	167.58
160	178.68
170	189.10
180	199.12
190	208.84
200	218.47
210	227.70
220	236.74
230	245.68
240	254.32
250	262.57
260	270.92
270	279.20
280	284.77
290	290.86
300	296.86

Mean Load mg. H_2SO_4/g. C	Rate mg. H_2SO_4/g. C/min.
2	6.5815
4	3.6837
6	2.4558
8	1.5226
10	1.2083
12	0.9921
14	0.8743
16	0.7859
18	0.7466
20	0.7367
25	0.7957
30	0.8546
35	0.9037
40	0.9627
45	0.9921
50	1.0314
55	1.0609
60	1.0904
65	1.1198
70	1.1395
75	1.1591
80	1.1788
85	1.1886
90	1.2083
95	1.2181
100	1.2279
110	1.2377
120	1.2475
130	1.2377
140	1.2181
150	1.1886
160	1.1591
170	1.1297
180	1.1002
190	1.0609
200	1.0216
220	0.9528
240	0.8743
260	0.7859
280	0.6876
300	0.5894

GRAVIMETRIC FLOW EXPERIMENTS

Run:	172-G	NO:	0 ppm	F_t:	1500 cc/min.
Dry Weight:	100.14 mg.	O_2:	3.5%%	% H_2SO_4:	76.89
Deflection:	-6.13 mg.	H_2O:	6%	Correction:	0.5021
SO_2:	2000 ppm	t:	200°F	Date:	July 8, 1971
Carbon:	EXC-2				

Time minutes	Load mg. H_2SO_4/g. C
1	3.40
2	5.19
3	6.39
4	7.39
5	8.39
6	9.29
7	10.19
8	10.98
9	11.88
10	12.68
12	14.48
14	16.17
16	17.97
18	19.87
20	21.77
25	26.86
30	32.15
35	37.85
40	43.74
45	50.33
50	57.02
60	71.10
70	86.68
80	103.26
90	119.83
100	136.81
110	153.7[illegible]
120	170.3[illegible]
130	186.54
140	201.22
150	216.16
160	230.3[illegible]
170	244.4[illegible]
180	256.24
190	271.52
200	281.81
210	291.79
220	301.9[illegible]
230	312.1[illegible]
240	322.15
250	331.6[illegible]
260	[illegible].92
270	[illegible].11
280	[illegible].30
290	[illegible].50
300	370.68

Mean Load mg. H_2SO_4/g. C	Rate mg. H_2SO_4/g. C/min.
2	2.9459
4	1.8774
6	1.2483
8	0.9087
10	0.8238
12	0.8189
14	0.8438
16	0.8738
18	0.9087
20	0.9387
25	1.0136
30	1.0785
35	1.1484
40	1.2033
45	1.2582
50	1.3132
55	1.3581
60	1.4030
65	1.4430
70	1.4779
75	1.5179
80	1.5478
85	1.5728
90	1.5978
95	1.6177
100	1.6377
110	1.6677
120	1.6777
130	1.6826
140	1.6777
150	1.6677
160	1.6477
170	1.6227
180	1.5978
190	1.5678
200	1.5279
220	1.4530
240	1.3681
260	1.2682
280	1.1684
300	1.0685
320	0.9637
340	0.8488
360	0.7390

GRAVIMETRIC FLOW EXPERIMENTS

Run:	175-G	NO:	0 ppm	F_t:	1500 cc/min.
Dry Weight:	102.56 mg.	O_2:	3.5%	% H_2SO_4:	73.58
Deflection:	-6.16 mg.	H_2O:	6.0%	Correction:	0.4980
SO_2:	2000 ppm	t:	200°F	Date:	July 16, 1971
Carbon:	EXC-3				

Time minutes	Load mg. H_2SO_4/g. C
1	6.34
2	8.29
3	9.56
4	10.43
5	11.31
6	12.09
7	12.77
8	13.46
9	14.14
10	14.72
12	16.19
14	17.55
16	19.01
18	20.48
20	22.04
25	26.23
30	30.91
35	36.08
40	41.44
45	47.19
50	53.33
60	66.50
70	80.54
80	95.46
90	110.18
100	125.39
110	141.38
120	157.37
130	172.87
140	188.09
150	201.93
160	214.90
170	228.16
180	241.22
190	253.41
200	265.41
210	276.91
220	287.64
230	297.00
240	305.06
250	314.04
260	323.62
270	331.71
280	339.41
290	346.52
300	353.94

Mean Load mg. H_2SO_4/g. C	Rate mg. H_2SO_4/g. C/min.
2	8.2391
4	5.1677
6	3.1201
8	1.7453
10	0.8970
12	0.7118
14	0.6533
16	0.6728
18	0.7215
20	0.7605
25	0.8678
30	0.9555
35	1.0238
40	1.1018
45	1.1603
50	1.2188
55	1.2676
60	1.3066
65	1.3358
70	1.3748
75	1.4041
80	1.4333
85	1.4528
90	1.4723
95	1.4918
100	1.5113
110	1.5308
120	1.5503
130	1.5601
140	1.5601
150	1.5503
160	1.5308
170	1.5113
180	1.4821
190	1.4431
200	1.4041
220	1.3066
240	1.2188
260	1.1408
280	1.0628
300	0.9653
320	0.8678
340	0.7605

APPENDIX A-15-2

SURFACE AREA AND PORE VOLUME DISTRIBUTION OF SOLVENT EXTRACTED CARBON

Surface area and pore volume distribution measurements were made by means of nitrogen isotherms on the Englehard Isorpta, Englehard Industries, Inc., Newark, New Jersey. The surface area was calculated from the BET equation[12]* and the pore volume distribution with a computer program we have using the Roberts[13] method of pore determination. In the tables given in this section, REL P is relative pressure and VOLUME is volume adsorbed of nitrogen in cc./g. C. Other designations are S = surface area in m^2/g. C; C = the BET constant, and R = the correlation coefficient. PORE RADIUS is the range of pore size in Å; VOL is the volume in cc./g. C in that range; and CUMV is the cumulative volume to that point.

---

*References are listed in Bibliography, Section 8, in Volume I.

SAMPLE: EXA-1

REL P	VOLUME
0.1423	0.0933
0.1782	0.0990
0.2141	0.1015
0.3219	0.1078
0.4296	0.1135
0.5374	0.1182
0.6452	0.1226
0.7529	0.1268
0.8607	0.1318
0.9685	0.1389

S 193.7
C -34.257
R 0.9980

PORE	RADIUS	VOL	CUMV
1000.	500.	0.0012	0.0012
500.	400.	0.0006	0.0018
400.	300.	0.0009	0.0026
300.	200.	0.0016	0.0042
200.	150.	0.0015	0.0057
150.	100.	0.0027	0.0084
100.	90.	0.0009	0.0093
90.	80.	0.0011	0.0103
80.	70.	0.0013	0.0116
70.	60.	0.0017	0.0133
60.	50.	0.0023	0.0157
50.	45.	0.0015	0.0172
45.	40.	0.0018	0.0191
40.	35.	0.0022	0.0213
35.	30.	0.0029	0.0242
30.	25.	0.0043	0.0285
25.	20.	0.0068	0.0353
20.	18.	0.0041	0.0394
18.	16.	0.0055	0.0449
16.	14.	0.0070	0.0519
14.	12.	0.0076	0.0595
12.	10.	0.0114	0.0709

SAMPLE: EXA-2

REL P	VOLUME
0.1488	0.0856
0.1865	0.0878
0.2243	0.0900
0.3375	0.0966
0.4508	0.1028
0.5641	0.1083
0.6773	0.1133
0.7906	0.1180
0.9039	0.1234
0.9869	0.1287

S 167.7
C -28.132
R 0.9991

PORE	RADIUS	VOL	CUMV
1000.	500.	0.0009	0.0009
500.	400.	0.0004	0.0013
400.	300.	0.0007	0.0020
300.	200.	0.0013	0.0032
200.	150.	0.0012	0.0045
150.	100.	0.0023	0.0068
100.	90.	0.0008	0.0076
90.	80.	0.0010	0.0085
80.	70.	0.0012	0.0097
70.	60.	0.0016	0.0113
60.	50.	0.0023	0.0136
50.	45.	0.0015	0.0151
45.	40.	0.0019	0.0170
40.	35.	0.0024	0.0195
35.	30.	0.0033	0.0227
30.	25.	0.0048	0.0275
25.	20.	0.0078	0.0353
20.	18.	0.0047	0.0400
18.	16.	0.0059	0.0459
16.	14.	0.0070	0.0529
14.	12.	0.0077	0.0606
12.	10.	0.0077	0.0683

SAMPLE: EXA-3

REL P	VOLUME
0.1488	0.3620
0.1865	0.3684
0.2243	0.3731
0.3375	0.3850
0.4508	0.3948
0.5641	0.4027
0.6773	0.4096
0.7906	0.4161
0.9039	0.4231
0.9869	0.4296

S 650.9
C -20.340
R 0.9983

PORE RADIUS		VOL	CUMV
1000.	500.	0.0010	0.0010
500.	400.	0.0005	0.0015
400.	300.	0.0008	0.0023
300.	200.	0.0016	0.0039
200.	150.	0.0015	0.0054
150.	100.	0.0029	0.0084
100.	90.	0.0010	0.0093
90.	80.	0.0012	0.0106
80.	70.	0.0016	0.0121
70.	60.	0.0021	0.0142
60.	50.	0.0030	0.0173
50.	45.	0.0021	0.0194
45.	40.	0.0026	0.0220
40.	35.	0.0034	0.0254
35.	30.	0.0045	0.0299
30.	25.	0.0066	0.0365
25.	20.	0.0111	0.0476
20.	18.	0.0071	0.0547
18.	16.	0.0094	0.0641
16.	14.	0.0120	0.0761
14.	12.	0.0151	0.0912
12.	10.	0.0210	0.1122

SAMPLE: EXA-5

REL P	VOLUME
0.1428	0.3382
0.1791	0.3430
0.2153	0.3478
0.3241	0.3588
0.4328	0.3683
0.5416	0.3759
0.6504	0.3831
0.7591	0.3898
0.8679	0.3975
0.9766	0.4093

S 620.8
C -22.416
R 0.9985

PORE RADIUS		VOL	CUMV
1000.	500.	0.0026	0.0026
500.	400.	0.0010	0.0037
400.	300.	0.0015	0.0052
300.	200.	0.0026	0.0079
200.	150.	0.0023	0.0102
150.	100.	0.0041	0.0143
100.	90.	0.0013	0.0155
90.	80.	0.0015	0.0171
80.	70.	0.0019	0.0190
70.	60.	0.0025	0.0215
60.	50.	0.0035	0.0250
50.	45.	0.0024	0.0274
45.	40.	0.0029	0.0303
40.	35.	0.0036	0.0339
35.	30.	0.0048	0.0387
30.	25.	0.0069	0.0456
25.	20.	0.0108	0.0564
20.	18.	0.0066	0.0630
18.	16.	0.0092	0.0722
16.	14.	0.0117	0.0840
14.	12.	0.0133	0.0973
12.	10.	0.0201	0.1174

SAMPLE: EXB-3

REL P	VOLUME
0.1426	0.3636
0.1788	0.3690
0.2151	0.3734
0.3237	0.3855
0.4323	0.3956
0.5409	0.4039
0.6495	0.4115
0.7581	0.4184
0.8667	0.4257
0.9753	0.4350

S 667.5
C -22.456
R 0.9986

PORE RADIUS		VOL	CUMV
1000.	500.	0.0015	0.0015
500.	400.	0.0007	0.0022
400.	300.	0.0010	0.0032
300.	200.	0.0019	0.0051
200.	150.	0.0018	0.0069
150.	100.	0.0034	0.0104
100.	90.	0.0011	0.0115
90.	80.	0.0014	0.0129
80.	70.	0.0018	0.0146
70.	60.	0.0024	0.0170
60.	50.	0.0034	0.0204
50.	45.	0.0023	0.0227
45.	40.	0.0029	0.0256
40.	35.	0.0038	0.0294
35.	30.	0.0051	0.0345
30.	25.	0.0074	0.0419
25.	20.	0.0119	0.0538
20.	18.	0.0073	0.0611
18.	16.	0.0097	0.0708
16.	14.	0.0125	0.0833
14.	12.	0.0156	0.0990
12.	10.	0.0187	0.1176

SAMPLE: EXB-4

REL P	VOLUME
0.1425	0.3720
0.1786	0.3772
0.2148	0.3816
0.3232	0.3931
0.4317	0.4023
0.5402	0.4100
0.6487	0.4167
0.7571	0.4237
0.8656	0.4309
0.9741	0.4407

S 680.1
C -22.182
R 0.9986

PORE RADIUS		VOL	CUMV
1000.	500.	0.0021	0.0021
500.	400.	0.0008	0.0030
400.	300.	0.0013	0.0042
300.	200.	0.0022	0.0064
200.	150.	0.0020	0.0084
150.	100.	0.0035	0.0119
100.	90.	0.0011	0.0130
90.	80.	0.0014	0.0144
80.	70.	0.0018	0.0162
70.	60.	0.0024	0.0185
60.	50.	0.0034	0.0219
50.	45.	0.0023	0.0242
45.	40.	0.0030	0.0272
40.	35.	0.0039	0.0310
35.	30.	0.0049	0.0360
30.	25.	0.0063	0.0423
25.	20.	0.0106	0.0529
20.	18.	0.0068	0.0597
18.	16.	0.0089	0.0686
16.	14.	0.0115	0.0800
14.	12.	0.0148	0.0948
12.	10.	0.0189	0.1137

SAMPLE: EXB-5

REL P	VOLUME
0.1484	0.4108
0.1860	0.4169
0.2237	0.4213
0.3366	0.4334
0.4496	0.4439
0.5626	0.4530
0.6755	0.4607
0.7885	0.4679
0.9015	0.4756
0.9994	0.4842

S 731.4
C -19.859
R 0.9983

PORE	RADIUS	VOL	CUMV
1000.	500.	0.0011	0.0011
500.	400.	0.0005	0.0017
400.	300.	0.0009	0.0026
300.	200.	0.0017	0.0043
200.	150.	0.0017	0.0059
150.	100.	0.0032	0.0091
100.	90.	0.0011	0.0102
90.	80.	0.0013	0.0115
80.	70.	0.0017	0.0133
70.	60.	0.0023	0.0156
60.	50.	0.0034	0.0190
50.	45.	0.0024	0.0213
45.	40.	0.0030	0.0243
40.	35.	0.0038	0.0282
35.	30.	0.0051	0.0332
30.	25.	0.0073	0.0405
25.	20.	0.0128	0.0533
20.	18.	0.0080	0.0613
18.	16.	0.0102	0.0714
16.	14.	0.0125	0.0839
14.	12.	0.0148	0.0988
12.	10.	0.0188	0.1175

SAMPLE: EXC-1

REL P	VOLUME
0.1426	0.3442
0.1788	0.3489
0.2151	0.3531
0.3237	0.3634
0.4323	0.3722
0.5409	0.3805
0.6495	0.3873
0.7581	0.3937
0.8667	0.4007
0.9753	0.4132

S 628.0
C -22.024
R 0.9985

PORE RADIUS		VOL	CUMV
1000.	500.	0.0040	0.0040
500.	400.	0.0014	0.0054
400.	300.	0.0020	0.0074
300.	200.	0.0031	0.0105
200.	150.	0.0025	0.0130
150.	100.	0.0041	0.0171
100.	90.	0.0012	0.0183
90.	80.	0.0015	0.0197
80.	70.	0.0018	0.0215
70.	60.	0.0023	0.0238
60.	50.	0.0032	0.0270
50.	45.	0.0021	0.0291
45.	40.	0.0027	0.0318
40.	35.	0.0034	0.0353
35.	30.	0.0045	0.0398
30.	25.	0.0065	0.0463
25.	20.	0.0115	0.0578
20.	18.	0.0073	0.0651
18.	16.	0.0086	0.0737
16.	14.	0.0104	0.0841
14.	12.	0.0127	0.0968
12.	10.	0.0174	0.1141

SAMPLE: EXC-2

REL P	VOLUME
0.1478	0.4102
0.1853	0.4172
0.2228	0.4232
0.3353	0.4348
0.4478	0.4459
0.5604	0.4553
0.6729	0.4624
0.7854	0.4688
0.8979	0.4768
0.9880	0.4838

S 736.8
C -20.304
R 0.9982

PORE RADIUS		VOL	CUMV
1000.	500.	0.0003	0.0003
500.	400.	0.0004	0.0007
400.	300.	0.0007	0.0014
300.	200.	0.0016	0.0030
200.	150.	0.0017	0.0047
150.	100.	0.0035	0.0082
100.	90.	0.0012	0.0094
90.	80.	0.0015	0.0109
80.	70.	0.0019	0.0127
70.	60.	0.0024	0.0151
60.	50.	0.0034	0.0185
50.	45.	0.0021	0.0206
45.	40.	0.0026	0.0232
40.	35.	0.0033	0.0266
35.	30.	0.0044	0.0310
30.	25.	0.0068	0.0378
25.	20.	0.0132	0.0510
20.	18.	0.0086	0.0596
18.	16.	0.0109	0.0705
16.	14.	0.0125	0.0831
14.	12.	0.0133	0.0964
12.	10.	0.0262	0.1226

SAMPLE: EXC-3

REL P	VOLUME
0.1478	0.4228
0.1853	0.4291
0.2228	0.4338
0.3353	0.4453
0.4478	0.4553
0.5604	0.4634
0.6729	0.4707
0.7854	0.4780
0.8979	0.4857
0.9880	0.4925

S 752.8
C -19.881
R 0.9983

PORE RADIUS		VOL	CUMV
1000.	500.	0.0006	0.0006
500.	400.	0.0004	0.0010
400.	300.	0.0007	0.0017
300.	200.	0.0015	0.0032
200.	150.	0.0016	0.0048
150.	100.	0.0032	0.0079
100.	90.	0.0011	0.0090
90.	80.	0.0014	0.0104
80.	70.	0.0018	0.0121
70.	60.	0.0024	0.0145
60.	50.	0.0034	0.0179
50.	45.	0.0024	0.0203
45.	40.	0.0030	0.0233
40.	35.	0.0039	0.0272
35.	30.	0.0050	0.0322
30.	25.	0.0070	0.0391
25.	20.	0.0113	0.0504
20.	18.	0.0071	0.0575
18.	16.	0.0096	0.0671
16.	14.	0.0119	0.0790
14.	12.	0.0142	0.0933
12.	10.	0.0202	0.1135

SAMPLE: EXD-1

REL-P	VOLUME
0.1484	0.0769
0.1860	0.0792
0.2237	0.0818
0.3366	0.0896
0.4496	0.0964
0.5626	0.1019
0.6755	0.1072
0.7885	0.1121
0.9015	0.1176
0.9919	0.1236

S 158.4
C -37.043
R 0.9995

PORE RADIUS		VOL	CUMV
1000.	500.	0.0009	0.0009
500.	400.	0.0004	0.0013
400.	300.	0.0007	0.0020
300.	200.	0.0013	0.0033
200.	150.	0.0012	0.0045
150.	100.	0.0024	0.0069
100.	90.	0.0008	0.0077
90.	80.	0.0010	0.0087
80.	70.	0.0012	0.0099
70.	60.	0.0017	0.0116
60.	50.	0.0024	0.0139
50.	45.	0.0016	0.0155
45.	40.	0.0020	0.0175
40.	35.	0.0026	0.0201
35.	30.	0.0035	0.0236
30.	25.	0.0051	0.0287
25.	20.	0.0076	0.0363
20.	18.	0.0047	0.0410
18.	16.	0.0065	0.0475
16.	14.	0.0083	0.0558
14.	12.	0.0098	0.0655
12.	10.	0.0095	0.0750

SAMPLE EXH-1

REL P	VOLUME
0.1484	0.4065
0.1860	0.4106
0.2237	0.4156
0.3366	0.4278
0.4496	0.4383
0.5626	0.4471
0.6755	0.4544
0.7885	0.4619
0.9015	0.4696
0.9919	0.4781

S 721.7
C -19.848
R 0.9984

PORE RADIUS		VOL	CUMV
1000.	500.	0.0014	0.0014
500.	400.	0.0006	0.0021
400.	300.	0.0010	0.0030
300.	200.	0.0018	0.0048
200.	150.	0.0017	0.0065
150.	100.	0.0032	0.0097
100.	90.	0.0011	0.0108
90.	80.	0.0013	0.0121
80.	70.	0.0017	0.0138
70.	60.	0.0023	0.0162
60.	50.	0.0034	0.0196
50.	45.	0.0025	0.0220
45.	40.	0.0031	0.0251
40.	35.	0.0040	0.0291
35.	30.	0.0049	0.0340
30.	25.	0.0069	0.0409
25.	20.	0.0121	0.0531
20.	18.	0.0078	0.0608
18.	16.	0.0102	0.0711
16.	14.	0.0127	0.0837
14.	12.	0.0150	0.0987
12.	10.	0.0192	0.1179

SAMPLE: EXN-1

REL P	VOLUME
0.1426	0.1570
0.1788	0.1603
0.2151	0.1638
0.3237	0.1721
0.4323	0.1791
0.5409	0.1850
0.6495	0.1900
0.7581	0.1944
0.8667	0.1996
0.9753	0.2074

S 302.4
C -26.573
R 0.9988

PORE	RADIUS	VOL	CUMV
1000.	500.	0.0015	0.0015
500.	400.	0.0007	0.0022
400.	300.	0.0010	0.0032
300.	200.	0.0017	0.0049
200.	150.	0.0016	0.0065
150.	100.	0.0028	0.0093
100.	90.	0.0009	0.0102
90.	80.	0.0011	0.0112
80.	70.	0.0013	0.0126
70.	60.	0.0017	0.0143
60.	50.	0.0024	0.0167
50.	45.	0.0016	0.0182
45.	40.	0.0018	0.0201
40.	35.	0.0023	0.0224
35.	30.	0.0031	0.0255
30.	25.	0.0049	0.0304
25.	20.	0.0083	0.0388
20.	18.	0.0052	0.0440
18.	16.	0.0068	0.0508
16.	14.	0.0086	0.0594
14.	12.	0.0103	0.0697
12.	10.	0.0148	0.0844

SAMPLE: EXV-1

REL P	VOLUME
0.1428	0.3628
0.1789	0.3686
0.2149	0.3733
0.3231	0.3851
0.4313	0.3950
0.5395	0.4031
0.6477	0.4103
0.7559	0.4168
0.8641	0.4242
0.9722	0.4350

S 667.4
C -22.544
R 0.9985

PORE RADIUS		VOL	CUMV
1000.	500.	0.0022	0.0022
500.	400.	0.0009	0.0031
400.	300.	0.0014	0.0045
300.	200.	0.0024	0.0070
200.	150.	0.0022	0.0092
150.	100.	0.0040	0.0131
100.	90.	0.0012	0.0144
90.	80.	0.0015	0.0159
80.	70.	0.0019	0.0178
70.	60.	0.0025	0.0203
60.	50.	0.0034	0.0237
50.	45.	0.0023	0.0260
45.	40.	0.0028	0.0288
40.	35.	0.0035	0.0323
35.	30.	0.0047	0.0369
30.	25.	0.0070	0.0439
25.	20.	0.0115	0.0554
20.	18.	0.0071	0.0625
18.	16.	0.0096	0.0721
16.	14.	0.0123	0.0844
14.	12.	0.0149	0.0994
12.	10.	0.0204	0.1198

APPENDIX A-16

EXPERIMENTAL RESULTS OF BENCH SCALE RECYCLE TESTS - SOLVENT EXTRACTION VERSUS HYDROGEN TREATMENT

		Page
1.	SO_2 Sorption Results from 1" Diameter Fixed Bed for $(NH_4)_2S$ Extracted and H_2S Generation Carbon Samples	436
2.	SO_2 Sorption Results from Differential Rate Apparatus for $(NH_4)_2S$ Extracted and H_2S Generation Carbon Samples	448
3.	Sulfur Generation from 1" Diameter Fixed Bed for $(NH_4)_2S$ Extracted and H_2S Generation Carbon Samples	453
4.	$(NH_4)_2S$ Extraction Experimental Results	462
5.	Pore Volume Distribution Runs for $(NH_4)_2S$ Extracted and H_2S Generation Samples after Sixth Cycle	468

APPENDIX A-16-1

SO_2 SORPTION RESULTS FROM 1" DIAMETER FIXED BED FOR $(NH_4)_2S$ EXTRACTED AND H_2S GENERATION CARBON SAMPLES

SO2 SORPTION RATE 8 31 71

RXT-6-1A

TEMPERATURE = 208.000000 F
SPACE VELOCITY = 0.299939E 04 /HR
INLET SO2 MOLE FRACTION (DRY) = 0.002760 (WET) = 0.002484
INLET H2O MOLE FRACTION = 0.099978
INLET OXYGEN MOLE FRACTION = 0.035403
INLET CO2 MOLE FRACTION = 0.0
INLET NO MOLE FRACTION = 0.000149
INLET INERT GAS MOLE FRACTION = 0.861992
INLET CARBON WEIGHT = 40.000000 GMS
TOTAL GAS FLOW = 7.061549 SCFH

TIME	MOLE FRACTION SO2	H2SO4 LOADING GMS ACID/GM C	RATE OF H2SO4 SORPTION GMS ACID/GM C-MIN
0.	0.315000E-03	0.0	0.0
30.	0.315000E-03	0.241539E-01	0.805129E-03
60.	0.398000E-03	0.478977E-01	0.777798E-03
90.	0.450000E-03	0.709748E-01	0.760674E-03
120.	0.660000E-03	0.927576E-01	0.691522E-03
150.	0.660000E-03	0.113503E 00	0.691522E-03
180.	0.600000E-03	0.134545E 00	0.711279E-03
210.	0.750000E-03	0.155143E 00	0.661885E-03
240.	0.920000E-03	0.174160E 00	0.605905E-03
260.	0.900000E-03	0.186343E 00	0.612491E-03

AVERAGE RATE OF SO2 SORPTION = 0.705465E-03

SO2 SORPTION RATE 8 31 71

RXT-6-2A

TEMPERATURE = 209.000000 F
SPACE VELOCITY = 0.299961E 04 /HR
INLET SO2 MOLE FRACTION (DRY) = 0.002760 (WET) = 0.002484
INLET H2O MOLE FRACTION = 0.100021
INLET OXYGEN MOLE FRACTION = 0.035045
INLET CO2 MOLE FRACTION = 0.0
INLET NO MOLE FRACTION = 0.000150
INLET INERT GAS MOLE FRACTION = 0.862302
INLET CARBON WEIGHT = 29.899994 GMS
TOTAL GAS FLOW = 5.278689 SCFH

TIME	MOLE FRACTION SO2	H2SO4 LOADING GMS ACID/GM C	RATE OF H2SO4 SORPTION GMS ACID/GM C-MIN
0.	0.150000E-03	0.0	0.0
30.	0.150000E-03	0.257845E-01	0.859484E-03
60.	0.510000E-03	0.497908E-01	0.740934E-03
90.	0.690000E-03	0.711296E-01	0.681660E-03
120.	0.102000E-02	0.899493E-01	0.572999E-03
150.	0.100500E-02	0.107213E 00	0.577929E-03
180.	0.108000E-02	0.124180E 00	0.553231E-03
210.	0.120000E-02	0.140185E 00	0.513715E-03

AVERAGE RATE OF SO2 SORPTION = 0.642848E-03

SO2 SORPTION RATE 8 31 71

RXT-6-3A

TEMPERATURE = 199.000000 F
SPACE VELOCITY = 0.299982E 04 /HR
INLET SO2 MOLE FRACTION (DRY) = 0.002780 (WET) = 0.002502
INLET H2O MOLE FRACTION = 0.100036
INLET OXYGEN MOLE FRACTION = 0.034975
INLET CO2 MOLE FRACTION = 0.0
INLET NO MOLE FRACTION = 0.000150
INLET INERT GAS MOLE FRACTION = 0.862338
INLET CARBON WEIGHT = 30.119995 GMS
TOTAL GAS FLOW = 5.318099 SCFH

TIME	MOLE FRACTION SO2	H2SO4 LOADING GMS ACID/GM C	RATE OF H2SO4 SORPTION GMS ACID/GM C-MIN
0.	0.270000E-03	0.0	0.0
30.	0.270000E-03	0.247979E-01	0.826598E-03
60.	0.420000E-03	0.488548E-01	0.777199E-03
90.	0.585000E-03	0.713557E-01	0.722862E-03
120.	0.780000E-03	0.920782E-01	0.658644E-03
150.	0.103500E-02	0.110576E 00	0.574667E-03
180.	0.102000E-02	0.127892E 00	0.579607E-03
210.	0.916000E-03	0.145794E 00	0.613856E-03
240.	0.885000E-03	0.164363E 00	0.624065E-03

AVERAGE RATE OF SO2 SORPTION = 0.672186E-03

SO2 SORPTION RATE 8 31 71

RXT-6-4A

TEMPERATURE = 204.000000 F
SPACE VELOCITY = 0.299933E 04 /HR
INLET SO2 MOLE FRACTION (DRY) = 0.002780 (WET) = 0.002502
INLET H2O MOLE FRACTION = 0.100043
INLET OXYGEN MOLE FRACTION = 0.034948
INLET CO2 MOLE FRACTION = 0.0
INLET NO MOLE FRACTION = 0.000150
INLET INERT GAS MOLE FRACTION = 0.862364
INLET CARBON WEIGHT = 29.500000 GMS
TOTAL GAS FLOW = 5.207779 SCFH

TIME	MOLE FRACTION SO2	H2SO4 LOADING GMS ACID/GM C	RATE OF H2SO4 SORPTION GMS ACID/GM C-MIN
0.	0.120000E-03	0.0	0.0
30.	0.120000E-03	0.262754E-01	0.875846E-03
60.	0.570000E-03	0.503282E-01	0.727676E-03
90.	0.750000E-03	0.712694E-01	0.668408E-03
120.	0.764000E-03	0.912524E-01	0.663799E-03
150.	0.930000E-03	0.110346E 00	0.609141E-03
180.	0.103500E-02	0.128102E 00	0.574568E-03
210.	0.120800E-02	0.144485E 00	0.517605E-03
240.	0.120800E-02	0.160013E 00	0.517605E-03
270.	0.127500E-02	0.175210E 00	0.495544E-03
290.	0.135000E-02	0.184874E 00	0.470849E-03

AVERAGE RATE OF SO2 SORPTION = 0.616974E-03

SO2 SORPTION RATE 8 31 71

RXT-6-5A

TEMPERATURE = 206.000000 F
SPACE VELOCITY = 0.299917E 04 /HR
INLET SO2 MOLE FRACTION (DRY) = 0.002780 (WET) = 0.002502
INLET H2O MOLE FRACTION = 0.100026
INLET OXYGEN MOLE FRACTION = 0.035019
INLET CO2 MOLE FRACTION = 0.0
INLET NO MOLE FRACTION = 0.000149
INLET INERT GAS MOLE FRACTION = 0.862311
INLET CARBON WEIGHT = 29.279999 GMS
TOTAL GAS FLOW = 5.168670 SCFH

TIME	MOLE FRACTION SO2	H2SO4 LOADING GMS ACID/GM C	RATE OF H2SO4 SORPTION GMS ACID/GM C-MIN
0.	0.270000E-03	0.0	0.0
30.	0.270000E-03	0.247928E-01	0.826428E-03
60.	0.720000E-03	0.473632E-01	0.678264E-03
90.	0.870000E-03	0.669702E-01	0.628876E-03
120.	0.102000E-02	0.850956E-01	0.579480E-03
150.	0.105000E-02	0.102332E 00	0.569610E-03
180.	0.103500E-02	0.119494E 00	0.574549E-03
210.	0.117000E-02	0.136064E 00	0.530099E-03
240.	0.135000E-02	0.151078E 00	0.470834E-03
270.	0.142500E-02	0.164833E 00	0.446140E-03
300.	0.150000E-02	0.177846E 00	0.421445E-03
320.	0.150000E-02	0.186275E 00	0.421445E-03

AVERAGE RATE OF SO2 SORPTION = 0.563127E-03

SO2 SORPTION RATE 8 31 71

RXT-6-6A

TEMPERATURE = 199.000000 F
SPACE VELOCITY = 0.298621E 04 /HR
INLET SO2 MOLE FRACTION (DRY) = 0.002700 (WET) = 0.002430
INLET H2O MOLE FRACTION = 0.100015
INLET OXYGEN MOLE FRACTION = 0.034935
INLET CO2 MOLE FRACTION = 0.0
INLET NO MOLE FRACTION = 0.000150
INLET INERT GAS MOLE FRACTION = 0.862405
INLET CARBON WEIGHT = 28.500000 GMS
TOTAL GAS FLOW = 5.009249 SCFH

TIME	MOLE FRACTION SO2	H2SO4 LOADING GMS ACID/GM C	RATE OF H2SO4 SORPTION GMS ACID/GM C-MIN
0.	0.0	0.0	0.0
30.	0.0	0.265547E-01	0.885157E-03
60.	0.390000E-03	0.511916E-01	0.757301E-03
90.	0.780000E-03	0.719927E-01	0.629445E-03
120.	0.855000E-03	0.905072E-01	0.604857E-03
150.	0.930000E-03	0.108284E 00	0.580270E-03
180.	0.108000E-02	0.124954E 00	0.531094E-03
210.	0.121500E-02	0.140223E 00	0.486836E-03
240.	0.118500E-02	0.154976E 00	0.496671E-03
270.	0.124500E-02	0.169581E 00	0.477001E-03
280.	0.129000E-02	0.174277E 00	0.462248E-03

AVERAGE RATE OF SO2 SORPTION = 0.600290E-03

SO2 SORPTION RATE 8 31 71

RXT-7-1A

TEMPERATURE = 206.000000 F
SPACE VELOCITY = 0.299977E 04 /HR
INLET SO2 MOLE FRACTION (DRY) = 0.002740 (WET) = 0.002466
INLET H2O MOLE FRACTION = 0.099965
INLET OXYGEN MOLE FRACTION = 0.035398
INLET CO2 MOLE FRACTION = 0.0
INLET NO MOLE FRACTION = 0.000149
INLET INERT GAS MOLE FRACTION = 0.862024
INLET CARBON WEIGHT = 40.000000 GMS
TOTAL GAS FLOW = 7.062449 SCFH

TIME	MOLE FRACTION SO2	H2SO4 LOADING GMS ACID/GM C	RATE OF H2SO4 SORPTION GMS ACID/GM C-MIN
0.	0.150000E-03	0.0	0.0
30.	0.150000E-03	0.255899E-01	0.852998E-03
60.	0.210000E-03	0.508834E-01	0.833237E-03
90.	0.300000E-03	0.754359E-01	0.803596E-03
120.	0.330000E-03	0.993956E-01	0.793716E-03
150.	0.345000E-03	0.123133E 00	0.788776E-03
180.	0.570000E-03	0.145685E 00	0.714674E-03
210.	0.600000E-03	0.166977E 00	0.704793E-03
235.	0.750000E-03	0.183979E 00	0.655392E-03

AVERAGE RATE OF SO2 SORPTION = 0.770802E-03

SO2 SORPTION RATE 8 31 71

RXT-7-2A

TEMPERATURE = 203.000000 F
SPACE VELOCITY = 0.299962E 04 /HR
INLET SO2 MOLE FRACTION (DRY) = 0.002760 (WET) = 0.002484
INLET H2O MOLE FRACTION = 0.099964
INLET OXYGEN MOLE FRACTION = 0.034952
INLET CO2 MOLE FRACTION = 0.0
INLET NO MOLE FRACTION = 0.000150
INLET INERT GAS MOLE FRACTION = 0.862452
INLET CARBON WEIGHT = 32.409988 GMS
TOTAL GAS FLOW = 5.722059 SCFH

TIME	MOLE FRACTION SO2	H2SO4 LOADING GMS ACID/GM C	RATE OF H2SO4 SORPTION GMS ACID/GM C-MIN
0.	0.138000E-02	0.0	0.0
30.	0.138000E-02	0.136341E-01	0.454471E-03
60.	0.158500E-02	0.262556E-01	0.386959E-03
90.	0.163500E-02	0.376173E-01	0.370492E-03
120.	0.174000E-02	0.482134E-01	0.335913E-03
150.	0.186000E-02	0.576980E-01	0.296394E-03
180.	0.180000E-02	0.668862E-01	0.316154E-03
210.	0.166500E-02	0.770376E-01	0.360613E-03
240.	0.162000E-02	0.880783E-01	0.375432E-03
270.	0.166000E-02	0.991436E-01	0.362259E-03
300.	0.177000E-02	0.109468E 00	0.326033E-03
330.	0.166500E-02	0.119768E 00	0.360613E-03
360.	0.165000E-02	0.130660E 00	0.365552E-03
390.	0.180000E-02	0.140886E 00	0.316154E-03
420.	0.186000E-02	0.150074E 00	0.296394E-03
450.	0.198000E-02	0.158373E 00	0.256875E-03
480.	0.204000E-02	0.165783E 00	0.237115E-03
485.	0.202000E-02	0.166985E 00	0.243702E-03

AVERAGE RATE OF SO2 SORPTION = 0.337610E-03

SO2 SORPTION RATE 8 31 71

RXT-7-3A

TEMPERATURE = 204.000000 F
SPACE VELOCITY = 0.299944E 04 /HR
INLET SO2 MOLE FRACTION (DRY) = 0.002780 (WET) = 0.002502
INLET H2O MOLE FRACTION = 0.100045
INLET OXYGEN MOLE FRACTION = 0.035078
INLET CO2 MOLE FRACTION = 0.0
INLET NO MOLE FRACTION = 0.000149
INLET INERT GAS MOLE FRACTION = 0.862216
INLET CARBON WEIGHT = 27.289993 GMS
TOTAL GAS FLOW = 4.817819 SCFH

TIME	MOLE FRACTION SO2	H2SO4 LOADING GMS ACID/GM C	RATE OF H2SO4 SORPTION GMS ACID/GM C-MIN
0.	0.117000E-02	0.0	0.0
30.	0.117000E-02	0.159041E-01	0.530136E-03
60.	0.141000E-02	0.306227E-01	0.451109E-03
90.	0.144000E-02	0.440078E-01	0.441231E-03
120.	0.153000E-02	0.568002E-01	0.411596E-03
150.	0.168000E-02	0.684072E-01	0.362205E-03
180.	0.162000E-02	0.795696E-01	0.381961E-03
210.	0.180000E-02	0.901394E-01	0.322691E-03
240.	0.177000E-02	0.999683E-01	0.332569E-03
270.	0.186000E-02	0.109501E 00	0.302935E-03
300.	0.194000E-02	0.118194E 00	0.276593E-03
330.	0.188500E-02	0.126763E 00	0.294703E-03
360.	0.187000E-02	0.135678E 00	0.299642E-03
390.	0.195000E-02	0.144272E 00	0.273300E-03
420.	0.196500E-02	0.152397E 00	0.268361E-03
450.	0.189000E-02	0.160818E 00	0.293056E-03
480.	0.196500E-02	0.169240E 00	0.268361E-03
510.	0.208000E-02	0.176722E 00	0.230494E-03
520.	0.210000E-02	0.178994E 00	0.223908E-03

AVERAGE RATE OF SO2 SORPTION = 0.335513E-03

SO2 SORPTION RATE .. 8 31 71

RXT-7-4A

TEMPERATURE = 202.000000 F
SPACE VELOCITY = 0.299954E 04 /HR
INLET SO2 MOLE FRACTION (DRY) = 0.002780 (WET) = 0.002502
INLET H2O MOLE FRACTION = 0.100010
INLET OXYGEN MOLE FRACTION = 0.034786
INLET CO2 MOLE FRACTION = 0.0
INLET NO MOLE FRACTION = 0.000149
INLET INERT GAS MOLE FRACTION = 0.862560
INLET CARBON WEIGHT = 24.750000 GMS
TOTAL GAS FLOW = 4.369549 SCFH

TIME	MOLE FRACTION SO2	H2SO4 LOADING GMS ACID/GM C	RATE OF H2SO4 SORPTION GMS ACID/GM C-MIN
0.	0.135000E-02	0.0	0.0
30.	0.135000E-02	0.141270E-01	0.470900E-03
60.	0.167000E-02	0.266733E-01	0.365524E-03
90.	0.180000E-02	0.369969E-01	0.322714E-03
120.	0.186000E-02	0.463819E-01	0.302956E-03
150.	0.195000E-02	0.550260E-01	0.273319E-03
180.	0.186000E-02	0.636702E-01	0.302956E-03
210.	0.195000E-02	0.723143E-01	0.273319E-03
240.	0.192000E-02	0.806620E-01	0.283198E-03
270.	0.201000E-02	0.887133E-01	0.253561E-03
300.	0.183000E-02	0.972093E-01	0.312835E-03
330.	0.171000E-02	0.107187E 00	0.352351E-03
360.	0.165000E-02	0.118054E 00	0.372110E-03
390.	0.165000E-02	0.129217E 00	0.372110E-03
420.	0.156000E-02	0.140825E 00	0.401747E-03
450.	0.162000E-02	0.152581E 00	0.381989E-03
480.	0.162000E-02	0.164041E 00	0.381989E-03
510.	0.192000E-02	0.174018E 00	0.283198E-03
540.	0.200000E-02	0.182119E 00	0.256854E-03
570.	0.200000E-02	0.189825E 00	0.256854E-03

AVERAGE RATE OF SO2 SORPTION = 0.327393E-03

SO2 SORPTION RATE 8 31 71

RXT-7-5A

TEMPERATURE = 203.000000 F
SPACE VELOCITY = 0.299947E 04 /HR
INLET SO2 MOLE FRACTION (DRY) = 0.002820 (WET) = 0.002538
INLET H2O MOLE FRACTION = 0.099918
INLET OXYGEN MOLE FRACTION = 0.034936
INLET CO2 MOLE FRACTION = 0.0
INLET NO MOLE FRACTION = 0.000149
INLET INERT GAS MOLE FRACTION = 0.862459
INLET CARBON WEIGHT = 24.319992 GMS
TOTAL GAS FLOW = 4.293538 SCFH

TIME	MOLE FRACTION SO2	H2SO4 LOADING GMS ACID/GM C	RATE OF H2SO4 SORPTION GMS ACID/GM C-MIN
0.	0.202000E-02	0.0	0.0
30.	0.202000E-02	0.790385E-02	0.263462E-03
60.	0.207000E-02	0.155607E-01	0.246995E-03
90.	0.198000E-02	0.234152E-01	0.276635E-03
120.	0.198000E-02	0.317142E-01	0.276635E-03
150.	0.207000E-02	0.395687E-01	0.246995E-03
180.	0.213000E-02	0.466822E-01	0.227236E-03
210.	0.204000E-02	0.539439E-01	0.256875E-03
240.	0.213000E-02	0.612055E-01	0.227236E-03
270.	0.220000E-02	0.676768E-01	0.204183E-03
300.	0.207000E-02	0.744444E-01	0.246995E-03
330.	0.207000E-02	0.818543E-01	0.246995E-03
360.	0.202000E-02	0.895111E-01	0.263462E-03
390.	0.213000E-02	0.968716E-01	0.227236E-03
420.	0.214000E-02	0.103639E 00	0.223942E-03
450.	0.216000E-02	0.110259E 00	0.217356E-03
480.	0.225000E-02	0.116335E 00	0.187717E-03
510.	0.229500E-02	0.121744E 00	0.172897E-03
540.	0.234000E-02	0.126708E 00	0.158077E-03
570.	0.238500E-02	0.131228E 00	0.143257E-03
600.	0.240000E-02	0.135452E 00	0.138317E-03
630.	0.240000E-02	0.139602E 00	0.138317E-03
660.	0.234000E-02	0.144047E 00	0.158077E-03
690.	0.240000E-02	0.148493E 00	0.138317E-03
720.	0.237000E-02	0.152791E 00	0.148197E-03
750.	0.241500E-02	0.157015E 00	0.133378E-03

AVERAGE RATE OF SO2 SORPTION = 0.206751E-03

SO2 SORPTION RATE 8 31 71

RXT-7-6A

TEMPERATURE = 203.000000 F
SPACE VELOCITY = 0.299986E 04 /HR
INLET SO2 MOLE FRACTION (DRY) = 0.002760 (WET) = 0.002484
INLET H2O MOLE FRACTION = 0.099932
INLET OXYGEN MOLE FRACTION = 0.034928
INLET CO2 MOLE FRACTION = 0.0
INLET NO MOLE FRACTION = 0.000150
INLET INERT GAS MOLE FRACTION = 0.862517
INLET CARBON WEIGHT = 23.349991 GMS
TOTAL GAS FLOW = 4.122819 SCFH

TIME	MOLE FRACTION SO2	H2SO4 LOADING GMS ACID/GM C	RATE OF H2SO4 SORPTION GMS ACID/GM C-MIN
0.	0.163500E-02	0.0	0.0
30.	0.163500E-02	0.111160E-01	0.370535E-03
60.	0.171000E-02	0.218615E-01	0.345832E-03
90.	0.192000E-02	0.311990E-01	0.276666E-03
120.	0.198000E-02	0.392026E-01	0.256904E-03
150.	0.204000E-02	0.466133E-01	0.237142E-03
180.	0.195000E-02	0.541722E-01	0.266785E-03
210.	0.198000E-02	0.620275E-01	0.256904E-03
240.	0.201000E-02	0.695864E-01	0.247023E-03
270.	0.213000E-02	0.764042E-01	0.207500E-03
300.	0.207000E-02	0.829256E-01	0.227261E-03
330.	0.211000E-02	0.895458E-01	0.214087E-03
345.	0.210500E-02	0.927694E-01	0.215734E-03
360.	0.210000E-02	0.960178E-01	0.217381E-03
390.	0.216000E-02	0.102243E 00	0.197619E-03
420.	0.195000E-02	0.109209E 00	0.266785E-03
450.	0.205000E-02	0.116718E 00	0.233849E-03
480.	0.207000E-02	0.123635E 00	0.227261E-03
510.	0.215000E-02	0.130057E 00	0.200912E-03
540.	0.195000E-02	0.137073E 00	0.266785E-03
570.	0.195000E-02	0.145076E 00	0.266785E-03
600.	0.206000E-02	0.152536E 00	0.230555E-03
630.	0.204000E-02	0.159552E 00	0.237142E-03
660.	0.210000E-02	0.166370E 00	0.217381E-03
690.	0.207000E-02	0.173039E 00	0.227261E-03
710.	0.207000E-02	0.177584E 00	0.227261E-03

AVERAGE RATE OF SO2 SORPTION = 0.247057E-03

APPENDIX A-16-2

SO_2 SORPTION RESULTS FROM DIFFERENTIAL RATE APPARATUS FOR $(NH_4)_2S$ EXTRACTED AND H_2S GENERATION CARBON SAMPLES

GRAVIMETRIC FLOW EXPERIMENTS

Run:	180-G	SO_2:	2000 ppm	t:	200°F
Dry Weight:	95.10 mg	NO:	150 ppm	Ft:	1500 cc/min.
Deflection:	-6.18 mg.	O_2:	3.5%	% H_2SO_4:	75.14
Carbon:	Virgin, C-70-77	H_2O:	6.0%	Correction:	0.4907
				Date:	August 3, 1971

Time minutes	Load mg. H_2SO_4/g. C
1	14.72
2	17.35
3	19.35
4	20.93
5	22.08
6	23.24
7	24.40
8	25.55
9	26.71
10	27.87
12	29.97
14	32.07
16	34.17
18	36.38
20	38.49
25	44.16
30	49.84
35	55.42
40	61.20
45	66.88
50	72.55
60	83.70
70	95.06
80	106.41
90	117.67
100	128.39
110	138.80
120	149.21
130	159.52
140	169.40
150	179.18
160	189.06
170	198.32
180	207.36
190	215.77
200	223.76
210	231.44
220	239.12
230	246.27
240	253.42
250	260.36
260	266.98
270	273.50
280	279.81
290	285.91
300	291.90

Mean Load mg. H_2SO_4/g. C	Rate mg. H_2SO_4/g. C/min.
6	16.2461
8	13.9327
10	11.6193
12	9.4637
14	6.5720
16	3.2597
18	1.8822
20	1.5563
25	1.1672
30	1.0726
35	1.0726
40	1.1251
45	1.1356
50	1.1356
55	1.1462
60	1.1567
65	1.1567
70	1.1567
75	1.1567
80	1.1567
85	1.1567
90	1.1567
95	1.1462
100	1.1462
110	1.1251
120	1.1041
130	1.0936
140	1.0726
150	1.0515
160	1.0305
170	1.0095
180	0.9884
190	0.9569
200	0.9253
220	0.8623
240	0.7886
260	0.7150
280	0.6309
300	0.5468

GRAVIMETRIC FLOW EXPERIMENTS

Run:	185-G	SO_2:	2000 ppm	t:	200°F
Dry Weight:	97.24 mg.	NO:	150 ppm	F_t:	1500 cc/min.
Deflection:	-5.94 mg.	O_2:	3.5%	% H_2SO_4:	77.72
Carbon:	RXT-6-3C	H_2O:	6.0%	Correction:	0.5076
				Date:	August 20, 1971

Time minutes	Load mg. H_2SO_4/g. C
1	5.55
2	8.64
3	11.00
4	13.27
5	15.32
6	17.07
7	18.92
8	20.57
9	22.21
10	23.76
12	26.43
14	29.21
16	31.78
18	34.25
20	36.71
25	42.37
30	47.72
35	52.55
40	57.28
45	61.81
50	66.23
60	74.56
70	82.68
80	90.60
90	98.72
100	106.64
110	114.66
120	122.48
130	130.19
140	137.70
150	145.21
160	152.41
170	159.30
180	166.19
190	173.08
200	179.86
210	186.65
220	193.44
230	199.92
240	206.50
250	212.67
260	218.63
270	224.60
280	230.46
290	236.32
300	241.88

Mean Load mg. H_2SO_4/g. C	Rate mg. H_2SO_4/g. C/min.
2	5.8412
4	4.7306
6	3.7742
8	3.0337
10	2.4452
12	2.2110
14	2.0053
16	1.8511
18	1.7277
20	1.6248
25	1.4500
30	1.3318
35	1.2238
40	1.1261
45	1.0490
50	0.9821
55	0.9255
60	0.8896
65	0.8536
70	0.8381
75	0.8227
80	0.8124
85	0.8073
90	0.8021
95	0.7970
100	0.7970
110	0.7919
120	0.7764
130	0.7610
140	0.7456
150	0.7302
160	0.7147
170	0.6942
180	0.6736
190	0.6582
200	0.6427
220	0.5965
240	0.5502

GRAVIMETRIC FLOW EXPERIMENTS

Run:	186-G	SO_2:	2000 ppm	t:	200°F
Dry Weight:	101.70 mg.	NO:	150 ppm	F_t:	1500 cc/min.
Deflection:	-6.35 mg.	O_2:	3.5%	% H_2SO_4:	75.56
Carbon:	RXT-7-3C	H_2O:	6.0%	Correction:	0.4934
				Date:	August 23, 1971

Time minutes	Load mg. H_2SO_4/g. C
1	6.78
2	8.95
3	10.42
4	11.50
5	12.29
6	12.98
7	13.67
8	14.36
9	15.04
10	15.73
12	16.91
14	18.19
16	19.47
18	20.55
20	21.73
25	24.39
30	27.14
35	29.60
40	31.96
45	34.32
50	36.68
60	40.90
70	45.23
80	49.16
90	52.90
100	56.44
110	60.28
120	64.01
130	67.45
140	71.48
150	75.22
160	79.35
170	83.48
180	87.41
190	91.05
200	94.59
210	98.03
220	101.57
230	105.51
240	109.44
250	113.27
260	117.11
270	120.94
280	124.78
290	128.42
300	131.86

Mean Load mg. H_2SO_4/g. C	Rate mg. H_2SO_4/g. C/min.
4	5.5261
6	3.6185
8	2.2616
10	1.3766
12	0.8505
14	0.7030
16	0.6391
18	0.5949
20	0.5605
25	0.5015
30	0.4720
35	0.4523
40	0.4425
45	0.4277
50	0.4228
55	0.4179
60	0.4179
65	0.4179
70	0.4179
75	0.4179
80	0.4130
85	0.4081
90	0.4031
95	0.3982
100	0.3933
110	0.3736
120	0.3589
130	0.3392

GRAVIMETRIC FLOW CALCULATIONS

Run:	187-G	SO_2:	2000 ppm	t:	200°F
Dry Weight:	91.92 mg.	NO:	150 ppm	F_t:	1500 cc/min.
Deflection:	-5.98 mg.	O_2:	3.5%	% H_2SO_4:	75.83
Carbon:	RXT-7-5C	H_2O:	6.0%	Correction:	0.4952
				Date:	August 24, 1971

Time minutes	Load mg. H_2SO_4/g. C
1	7.29
2	10.12
3	11.97
4	13.27
5	14.47
6	15.45
7	16.43
8	17.30
9	18.06
10	18.71
12	19.91
14	21.00
16	22.19
18	23.39
20	24.48
25	27.09
30	29.59
35	31.98
40	33.94
45	36.01
50	37.86
60	41.78
70	45.47
80	49.17
90	52.65
100	55.92
110	59.18
120	62.66
130	65.93
140	68.97
150	71.91
160	75.17
170	78.44
180	81.59
190	84.75
200	87.79
210	91.06
220	94.10
230	97.69
240	101.07
250	104.33
260	107.27
270	109.99
280	112.92
290	115.54
300	117.93

Mean Load mg. H_2SO_4/g. C	Rate mg. H_2SO_4/g. C/min.
4	6.4730
6	4.7868
8	3.3616
10	2.2084
12	1.4687
14	1.1151
16	0.8975
18	0.7398
20	0.6364
25	0.4896
30	0.4569
35	0.4297
40	0.4080
45	0.3916
50	0.3808
55	0.3753
60	0.3699
65	0.3590
70	0.3536
75	0.3481
80	0.3372
85	0.3264
90	0.3209
95	0.3046
100	0.2937
110	0.2665
120	0.2393

GRAVIMETRIC FLOW EXPERIMENTS

Run:	188-G	SO_2:	2000 ppm	t:	200°F
Dry Weight:	100.66 mg.	NO:	150 ppm	F_t:	1500 cc/min.
Deflection:	-5.96 mg.	O_2:	3.5%	% H_2SO_4:	76.97
Carbon:	RXT-6-5C	H_2O:	6.0%	Correction:	0.5027
				Date:	August 25, 1971

Time minutes	Load mg. H_2SO_4/g. C
1	7.15
2	10.53
3	13.31
4	15.50
5	17.68
6	19.57
7	21.36
8	23.15
9	24.74
10	26.33
12	29.31
14	32.19
16	34.87
18	37.55
20	40.04
25	45.90
30	51.26
35	56.43
40	61.10
45	65.67
50	70.04
60	78.48
70	86.83
80	94.87
90	102.52
100	109.97
110	117.23
120	124.48
130	131.53
140	138.49
150	145.34
160	152.39
170	159.15
180	165.71
190	172.36
200	178.82
210	184.88
220	190.64
230	196.70
240	202.56
250	208.52
260	214.39
270	220.15
280	225.91
290	231.27
300	236.44

Mean Load mg. H_2SO_4/g. C	Rate mg. H_2SO_4/g. C/min.
4	6.3332
6	4.6493
8	3.6956
10	3.0995
12	2.6376
14	2.3743
16	2.1111
18	1.9422
20	1.8180
25	1.5895
30	1.4355
35	1.3163
40	1.2170
45	1.1276
50	1.0481
55	0.9934
60	0.9438
65	0.9090
70	0.8742
75	0.8494
80	0.8295
85	0.8146
90	0.7948
95	0.7799
100	0.7699
110	0.7451
120	0.7252
130	0.7053
140	0.6904
150	0.6706
160	0.6557
170	0.6457
180	0.6259
190	0.6110
200	0.5911
220	0.5563
240	0.5166

APPENDIX A-16-3

SULFUR GENERATION FROM 1 INCH DIAMETER FIXED BED FOR $(NH_4)_2S$ EXTRACTED AND H_2S GENERATION CARBON SAMPLES

RATE OF SULFUR GENERATION 8 31 71
BENCH SCALE

RXT-6-1B

SPACE VELOCITY = 0.100125E 04 /HR
INERT GAS FLOW RATE = 623.00 SCC/MIN
WEIGHT OF CARBON, UNLOADED = 32.000 GMS LOADED = 40.30 GMS

INLET PERCENT H2S = 38.000
INLET MOLAR H2S CONCENTRATION = 0.612903 MOLES H2S/MOLE INERT GAS
INLET SULFURIC ACID LOADING = 0.187600 GMS H2SO4/GM CARBON,

FINAL OUTLET PERCENT SULFUR LOADING ON CARBON = 19.680
FINAL OUTLET SULFUR LOADING ON CARBON = 0.248 GMS S/GM CARBON
INITIAL TEMPERATURE = 270.00 F
MAXIMUM TEMPERATURE = 315.00 F
FINAL TEMPERATURE = 310.00 F

TIME	PERCENT H2S	PERCENT SO2	PERCENT CO2	MOLAR CONC H2S	H2SO4 LOADING GMS ACID/GM C	RATE ACID DECOMP. GM ACID/GM C-MIN.
0.0	0.0	0.0	0.0	0.0	0.187600E 00	0.0
5.0	0.210000E 01	0.0	0.0	0.214505E-01	0.102135E 00	-0.167886E-01
10.0	0.180000E 02	0.0	0.0	0.219512E 00	0.322466E-01	-0.111666E-01
15.0	0.166000E 02	0.0	0.0	0.199041E 00	-0.250390E-01	-0.117477E-01
20.0	0.242000E 02	0.0	0.0	0.319261E 00	-0.752460E-01	-0.833515E-02
25.0	0.360000E 02	0.0	0.0	0.562500E 00	-0.996606E-01	-0.143072E-02
30.0	0.380000E 02	0.0	0.0	0.612903E 00	-0.103237E 00	0.0
35.0	0.380000E 02	0.0	0.0	0.612903E 00	-0.103237E 00	0.0

ACID LOADING = 0.187600E-01 AT 0.111771E 02 MINUTES
RATE OF ACID DECOMPOSITION = -0.113034E-01 AT 0.111771E 02 MINUTES
AVERAGE RATE OF ACID DECOMPOSITION UP TO 90 PERCENT ACID UTILIZATION = -0.136960E-01

RATE OF SULFUR GENERATION 8 31 71
BENCH SCALE

RXT-6-2B

SPACE VELOCITY = 0.500870E 03 /HR
INERT GAS FLOW RATE = 291.00 SCC/MIN
WEIGHT OF CARBON, UNLOADED = 29.900 GMS LOADED = 35.61 GMS

INLET PERCENT H2S = 32.000
INLET MOLAR H2S CONCENTRATION = 0.470588 MOLES H2S/MOLE INERT GAS
INLET SULFURIC ACID LOADING = 0.139600 GMS H2SO4/GM CARBON,

FINAL OUTLET PERCENT SULFUR LOADING ON CARBON = 15.420
FINAL OUTLET SULFUR LOADING ON CARBON = 0.184 GMS S/GM CARBON
INITIAL TEMPERATURE = 280.00 F
MAXIMUM TEMPERATURE = 300.00 F
FINAL TEMPERATURE = 298.00 F

TIME	PERCENT H2S	PERCENT SO2	PERCENT CO2	MOLAR CONC H2S	H2SO4 LOADING GMS ACID/GM C	RATE ACID DECOMP. GM ACID/GM C-MIN.
0.0	0.0	0.0	0.0	0.0	0.139600E 00	0.0
10.0	0.123000E 02	0.0	0.0	0.140251E 00	0.827747E-01	-0.468745E-02
20.0	0.178000E 02	0.0	0.0	0.216545E 00	0.413132E-01	-0.360485E-02
30.0	0.225000E 02	0.0	0.0	0.290323E 00	0.104992E-01	-0.255795E-02
40.0	0.320000E 02	0.0	0.0	0.470588E 00	-0.229061E-02	0.0
50.0	0.320000E 02	0.0	0.0	0.470588E 00	-0.229061E-02	0.0

ACID LOADING = 0.139600E-01 AT 0.288769E 02 MINUTES
RATE OF ACID DECOMPOSITION = -0.267553E-02 AT 0.288769E 02 MINUTES
AVERAGE RATE OF ACID DECOMPOSITION UP TO 90 PERCENT ACID UTILIZATION = -0.369408E-02

RATE OF SULFUR GENERATION 8 31 71
BENCH SCALE

RXT-6-3B

SPACE VELOCITY = 0.499602E 03 /HR
INERT GAS FLOW RATE = 293.00 SCC/MIN
WEIGHT OF CARBON, UNLOADED = 30.120 GMS LOADED = 35.95 GMS

INLET PERCENT H2S = 32.500
INLET MOLAR H2S CONCENTRATION = 0.481481 MOLES H2S/MOLE INERT GAS
INLET SULFURIC ACID LOADING = 0.167100 GMS H2SO4/GM CARBON.

FINAL OUTLET PERCENT SULFUR LOADING ON CARBON = 17.910
FINAL OUTLET SULFUR LOADING ON CARBON = 0.214 GMS S/GM CARBON
INITIAL TEMPERATURE = 270.00 F
MAXIMUM TEMPERATURE = 310.00 F
FINAL TEMPERATURE = 298.00 F

TIME	PERCENT H2S	PERCENT SO2	PERCENT CO2	MOLAR CONC H2S	H2SO4 LOADING GMS ACID/GM C	RATE ACID DECOMP. GM ACID/GM C-MIN.
0.0	0.0	0.0	0.0	0.0	0.167100E 00	0.0
10.0	0.0	0.0	0.0	0.0	0.988111E-01	-0.682888E-02
20.0	0.250000E 01	0.0	0.0	0.256410E-01	0.323407E-01	-0.646521E-02
30.0	0.263000E 02	0.0	0.0	0.356852E 00	-0.882351E-02	-0.176763E-02
40.0	0.275000E 02	0.0	0.0	0.379310E 00	-0.249071E-01	-0.144910E-02
50.0	0.310000E 02	0.0	0.0	0.449275E 00	-0.344365E-01	-0.456781E-03
60.0	0.325000E 02	0.0	0.0	0.481481E 00	-0.367204E-01	0.0

ACID LOADING = 0.167100E-01 AT 0.237971E 02 MINUTES
RATE OF ACID DECOMPOSITION = -0.468147E-02 AT 0.237971E 02 MINUTES
AVERAGE RATE OF ACID DECOMPOSITION UP TO 90 PERCENT ACID UTILIZATION = -0.633341E-02

RATE OF SULFUR GENERATION 8 31 71
BENCH SCALE

RXT-6-4B

SPACE VELOCITY = 0.500339E 03 /HR
INERT GAS FLOW RATE = 287.00 SCC/MIN
WEIGHT OF CARBON, UNLOADED = 29.500 GMS LOADED = 36.69 GMS

INLET PERCENT H2S = 30.000
INLET MOLAR H2S CONCENTRATION = 0.428571 MOLES H2S/MOLE INERT GAS
INLET SULFURIC ACID LOADING = 0.185300 GMS H2SO4/GM CARBON,

FINAL OUTLET PERCENT SULFUR LOADING ON CARBON = 19.480
FINAL OUTLET SULFUR LOADING ON CARBON = 0.242 GMS S/GM CARBON
INITIAL TEMPERATURE = 305.00 F
MAXIMUM TEMPERATURE = 311.00 F
FINAL TEMPERATURE = 297.00 F

TIME	PERCENT H2S	PERCENT SO2	PERCENT CO2	MOLAR CONC H2S	H2SO4 LOADING GMS ACID/GM C	RATE ACID DECOMP. GM ACID/GM C-MIN.
0.0	0.0	0.0	0.0	0.0	0.185300E 00	0.0
15.0	0.850000E 01	0.0	0.0	0.928962E-01	0.103996E 00	-0.476142E-02
30.0	0.223000E 02	0.0	0.0	0.287001E 00	0.532245E-01	-0.200812E-02
45.0	0.262000E 02	0.0	0.0	0.355013E 00	0.303382E-01	-0.104339E-02
60.0	0.300000E 02	0.0	0.0	0.428571E 00	0.225127E-01	0.0

RATE OF SULFUR GENERATION 8 31 71
BENCH SCALE

RXT-6-5B

SPACE VELOCITY = 0.500410E 03 /HR
INERT GAS FLOW RATE = 285.00 SCC/MIN
WEIGHT OF CARBON, UNLOADED = 29.280 GMS LOADED = 35.80 GMS

INLET PERCENT H2S = 34.200
INLET MOLAR H2S CONCENTRATION = 0.519757 MOLES H2S/MOLE INERT GAS
INLET SULFURIC ACID LOADING = 0.186000 GMS H2SO4/GM CARBON,

FINAL OUTLET PERCENT SULFUR LOADING ON CARBON = 0.0
FINAL OUTLET SULFUR LOADING ON CARBON = 0.0 GMS S/GM CARBON
INITIAL TEMPERATURE = 273.00 F
MAXIMUM TEMPERATURE = 310.00 F
FINAL TEMPERATURE = 305.00 F

TIME	PERCENT H2S	PERCENT SO2	PERCENT CO2	MOLAR CONC H2S	H2SO4 LOADING GMS ACID/GM C	RATE ACID DECOMP. GM ACID/GM C-MIN.
0.0	0.0	0.0	0.0	0.0	0.186000E 00	0.0
15.0	0.200000E 01	0.0	0.0	0.204082E-01	0.775295E-01	-0.708655E-02
30.0	0.650000E 01	0.0	0.0	0.695187E-01	-0.235415E-01	-0.638960E-02
45.0	0.305000E 02	0.0	0.0	0.438849E 00	-0.800750E-01	-0.114821E-02
50.0	0.332000E 02	0.0	0.0	0.497006E 00	-0.837527E-01	-0.322871E-03
55.0	0.342000E 02	0.0	0.0	0.519757E 00	-0.845599E-01	0.0
60.0	0.342000E 02	0.0	0.0	0.519757E 00	-0.845599E-01	0.0

ACID LOADING = 0.186000E-01 AT 0.237458E 02 MINUTES
RATE OF ACID DECOMPOSITION = -0.668019E-02 AT 0.237458E 02 MINUTES
AVERAGE RATE OF ACID DECOMPOSITION UP TO 90 PERCENT ACID UTILIZATION = -0.693688E-02

RATE OF SULFUR GENERATION 8 31 71
BENCH SCALE

RXT-7-18

SPACE VELOCITY = 0.494292E 03 /HR
INERT GAS FLOW RATE = 312.00 SCC/MIN
WEIGHT OF CARBON, UNLOADED = 32.410 GMS LOADED = 38.60 GMS

INLET PERCENT H2S = 26.800
INLET MOLAR H2S CONCENTRATION = 0.366120 MOLES H2S/MOLE INERT GAS
INLET SULFURIC ACID LOADING = 0.167400 GMS H2SO4/GM CARBON,

FINAL OUTLET PERCENT SULFUR LOADING ON CARBON = 17.970
FINAL OUTLET SULFUR LOADING ON CARBON = 0.214 GMS S/GM CARBON
INITIAL TEMPERATURE = 273.00 F
MAXIMUM TEMPERATURE = 303.00 F
FINAL TEMPERATURE = 302.00 F

TIME	PERCENT H2S	PERCENT SO2	PERCENT CO2	MOLAR CONC H2S	H2SO4 LOADING GMS ACID/GM C	RATE ACID DECOMP. GM ACID/GM C-MIN.
0.0	0.0	0.0	0.0	0.0	0.167400E 00	0.0
30.0	0.650000E 01	0.0	0.0	0.695187E-01	0.278739E-01	-0.416300E-02
60.0	0.252000E 02	0.0	0.0	0.336898E 00	-0.407232E-01	-0.410145E-03
90.0	0.256000E 02	0.0	0.0	0.344086E 00	-0.515143E-01	-0.309264E-03
105.0	0.268000E 02	0.0	0.0	0.366120E 00	-0.538338E-01	0.0

ACID LOADING = 0.167400E-01 AT 0.348693E 02 MINUTES
RATE OF ACID DECOMPOSITION = -0.355388E-02 AT 0.348693E 02 MINUTES
AVERAGE RATE OF ACID DECOMPOSITION UP TO 90 PERCENT ACID UTILIZATION = -0.407793E-02

RATE OF SULFUR GENERATION 8 31 71
BENCH SCALE

RXT-7-2B

SPACE VELOCITY = 0.615268E 03 /HR
INERT GAS FLOW RATE = 315.00 SCC/MIN
WEIGHT OF CARBON, UNLOADED = 26.330 GMS LOADED = 32.41 GMS

INLET PERCENT H2S = 26.300
INLET MOLAR H2S CONCENTRATION = 0.356852 MOLES H2S/MOLE INERT GAS
INLET SULFURIC ACID LOADING = 0.168900 GMS H2SO4/GM CARBON,

FINAL OUTLET PERCENT SULFUR LOADING ON CARBON = 18.070
FINAL OUTLET SULFUR LOADING ON CARBON = 0.222 GMS S/GM CARBON
INITIAL TEMPERATURE = 270.00 F
MAXIMUM TEMPERATURE = 315.00 F
FINAL TEMPERATURE = 300.00 F

TIME	PERCENT H2S	PERCENT SO2	PERCENT CO2	MOLAR CONC H2S	H2SO4 LOADING GMS ACID/GM C	RATE ACID DECOMP. GM ACID/GM C-MIN.
0.0	0.0	0.0	0.0	0.0	0.168900E 00	0.0
5.0	0.0	0.0	0.0	0.0	0.137777E 00	-0.622451E-02
10.0	0.0	0.320000E 01	0.0	0.0	0.106655E 00	-0.622451E-02
20.0	0.400000E 01	0.300000E 00	0.0	0.417973E-01	0.480550E-01	-0.549544E-02
30.0	0.230000E 02	0.0	0.0	0.298701E 00	0.155062E-01	-0.101431E-02
35.0	0.245000E 02	0.0	0.0	0.324503E 00	0.115598E-01	-0.564251E-03
40.0	0.260000E 02	0.0	0.0	0.351351E 00	0.990935E-02	-0.959453E-04
45.0	0.255000E 02	0.0	0.0	0.342282E 00	0.903412E-02	-0.254142E-03
55.0	0.260000E 02	0.0	0.0	0.351351E 00	0.728368E-02	-0.959453E-04
60.0	0.263000E 02	0.0	0.0	0.356852E 00	0.704382E-02	0.0

ACID LOADING = 0.168900E-01 AT 0.295749E 02 MINUTES
RATE OF ACID DECOMPOSITION = -0.120483E-02 AT 0.295749E 02 MINUTES
AVERAGE RATE OF ACID DECOMPOSITION UP TO 90 PERCENT ACID UTILIZATION = -0.435287E-02

RATE OF SULFUR GENERATION 8 31 71
BENCH SCALE

RXT-7-5B

SPACE VELOCITY = 0.500329E 03 /HR
INERT GAS FLOW RATE = 237.00 SCC/MIN
WEIGHT OF CARBON, UNLOADED = 24.320 GMS LOADED = 30.90 GMS

INLET PERCENT H2S = 28.000
INLET MOLAR H2S CONCENTRATION = 0.388889 MOLES H2S/MOLE INERT GAS
INLET SULFURIC ACID LOADING = 0.184000 GMS H2SO4/GM CARBON,

FINAL OUTLET PERCENT SULFUR LOADING ON CARBON = 19.350
FINAL OUTLET SULFUR LOADING ON CARBON = 0.246 GMS S/GM CARBON
INITIAL TEMPERATURE = 270.00 F
MAXIMUM TEMPERATURE = 310.00 F
FINAL TEMPERATURE = 300.00 F

TIME	PERCENT H2S	PERCENT SO2	PERCENT CO2	MOLAR CONC H2S	H2SO4 LOADING GMS ACID/GM C	RATE ACID DECOMP. GM ACID/GM C-MIN.
0.0	0.0	0.0	0.0	0.0	0.184000E 00	0.0
15.0	0.100000E 01	0.0	0.0	0.101010E-01	0.102195E 00	-0.538193E-02
30.0	0.800000E 00	0.0	0.0	0.806452E-02	0.212486E-01	-0.541086E-02
60.0	0.175000E 02	0.0	0.0	0.212121E 00	-0.975879E-01	-0.251157E-02
75.0	0.175000E 02	0.0	0.0	0.212121E 00	-0.135261E 00	-0.251157E-02
90.0	0.183000E 02	0.0	0.0	0.223990E 00	-0.171670E 00	-0.234293E-02
105.0	0.185000E 02	0.0	0.0	0.226994E 00	-0.206494E 00	-0.230025E-02
120.0	0.157000E 02	0.0	0.0	0.186240E 00	-0.245341E 00	-0.287930E-02
130.0	0.300000E 02	0.0	0.0	0.428571E 00	-0.256918E 00	0.563822E-03

ACID LOADING = 0.184000E-01 AT 0.307191E 02 MINUTES
RATE OF ACID DECOMPOSITION = -0.534137E-02 AT 0.307191E 02 MINUTES
AVERAGE RATE OF ACID DECOMPOSITION UP TO 90 PERCENT ACID UTILIZATION = -0.539510E-02

APPENDIX A-16-4

$(NH_4)_2S$ EXTRACTION EXPERIMENTAL RESULTS

RUN: RXT-7-1C

CARBON USED: RXT-7-1B SOLVENT USED: 15% $(NH_4)_2S$ Solution

Wash Number	Time, minutes	Temperature, °F	Circulation Rate, ml./min.		ml. $(NH_4)_2S$ Added	ml. $(NH_4)_2S$ + Sulfur Drained
			$(NH_4)_2S$	H_2O		
1	0	100	35		~50	
	2	102	35			
	5	105	35			
	8	105	35			
	11	105	35			
	15		35			19.5
2	0	120	35		~50	
	5	111	35			
	10	110	35			
	15	108	35			36
3	0	105	35		~50	
	5	102	35			
	10	105	35			
	15	108	35			37
4	0	110	35		~50	
	5	107	35			
	10	107	35			
	15	105	35			36
5	0	102	35		~50	
	5	101	35			
	10	102	35			
	15	100	35			34.5
6	0	115	35		~50	
	5	100	35			
	10	100	35			
	15	103	35			32
7	0	120	35		~50	
	5	105	35			
	10	105	35			
	15	105	35			32
8	0	105	35		~50	
	5	107	35			
	10	100	35			
	15	100	35			32.5
9	0	110	35		~50	
	5	100	35			
	10	105	35			
	15	100	35			33
10	0	115	35		~50	
	5	108	35			
	10	105	35			
	15	105	35			30
1	0	95		60		
	5	100		60		
	10	110		60		46*
2	0	110		60		
	5	105		60		
	10	110		60		37*
3**	0	105		60		
	5	105		60		
	10	105		60		39*

*ml. H_2O Drained

**After water washing, steamed for 2 hours at 1,000 cc/min.

RUN: RXT-7-2C

CARBON USED: RXT-7-2B SOLUTION USED: 15% $(NH_4)_2S$ Solution

Wash Number	Time, minutes	Temperature, °F	Circulation Rate, ml./min. $(NH_4)_2S$	H_2O	ml. $(NH_4)_2S$ Added	ml. $(NH_4)_2S$ + Sulfur Drained
1	0	102	35		~50	
	5	108	35			
	10	105	35			
	15	111	35			25
2	0		35		~50	
	5	110	35			
	10	100	35			
	15	106	35			62
3	0	115	35		~50	
	5	109	35			
	10	109	35			
	15	111	35			25
4	0	103	35		~50	
	5	110	35			
	10	104	35			
	15	109	35			45.8
5	0	115	35		~50	
	5	105	35			
	10	105	35			
	15	109	35			44
6	0	110	35		~50	
	5	100	35			
	10	110	35			
	15	103	35			40
7	0	117	35		~50	
	5	100	35			
	10	109	35			
	15	105	35			29.8
8	0	120	35		~50	
	5	108	35			
	10	100	35			
	15	102	35			46.2
9	0	123	35		~50	
	5	100	35			
	10	110	35			
	15	102	35			53
10	0	98	35		~50	
	5	112	35			
	10	110	35			
	15	106	35			51.5
11	0	111	35		~50	
	5	110	35			
	10	110	35			
	15	104	35			42
12	0	89	35		~50	
	5	106	35			
	10	110	35			
	15	100	35			48
13	0	110	35		~50	
	5	102	35			
	10	111	35			
	15	111	35			48
14	0	112	35		~50	
	5	103	35			
	10	110	35			
	15	110	35			44
15	0	90	35		~50	
	5	100	35			
	10	112	35			
	15	125	35			82.5
1	0	98		60		
	5	110		60		
	10	110		60		
	15	110		60		36.5*
2	0	127		60		
	5	105		60		
	10	110		60		
	15	110		60		52.5*
3**	0	120		60		
	5	111		60		
	10	111		60		
	15	111		60		66.3*

*ml. H_2O Drained

**After water washing, steamed for 2 hours at 1,000 cc/min.

RUN: RXT-7-3C

CARBON USED: RXT-7-3B SOLVENT USED: 15% $(NH_4)_2S$ Solution

Wash Number	Time, minutes	Temperature, °F	Circulation Rate, ml./min. $(NH_4)_2S$	Circulation Rate, ml./min. H_2O	ml. $(NH_4)_2S$ Added	ml. $(NH_4)_2S$ + Sulfur Drained
1	0	105	35			
	5	102	35			
	10	105	35			
	15	105	35			46
2	0	112	35			
	5	100	35			
	10	106	35			
	15	100	35			45
3	0	110	35		50	
	5	100	35			
	10	106	35			
	15	102	35			51
4	0	102	35		50	
	5	100	35			
	10	101	35			
	15	101	35			48
5	0	101	35		50	
	5	95	35			
	10	101	35			
	15	101	35			48
6	0	105	35		50	
	5	100	35			
	10	101	35			
	15	101	35			47
7	0	101	35		50	
	5	101	35			
	10	101	35			
	15	101	35			49
8	0	100	35		50	
	5	98	35			
	10	101	35			
	15	100	35			50
9	0	100	35		50	
	5	101	35			
	10	100	35			
	15	102	35			47
10	0	101	35		50	
	5	101	35			
	10	101	35			
	15	100	35			37
11	0	104	35		50	
	5	100	35			
	10	101	35			
	15	100	35			49
12	0	98	35		50	
	5	100	35			
	10	101	35			
	15	102	35			47
13	0	105	35		50	
	5	101	35			
	10	101	35			
	15	100	35			48
14	0	101	35		50	
	5	95	35			
	10	102	35			
	15	102	35			55
15	0	110	35		50	
	5	100	35			
	10	104	35			
	15	102	35			46
1	0	103		60	70*	
	5	101		60		
	100	101		60		
	15	101		60		41**
2	0	100		60	50*	
	5	101		60		
	10	101		60		
	15	100		60		
3***	0	100		60	50*	
	5	105		60		
	10	101		60		

*ml. H_2O Added
**ml. H_2O Drained
***After water washing, steamed for 2 hours at 1,000 cc/min.

RUN: RXT-7-4C

CARBON USED: RXT-7-4B SOLVENT USED: 15% $(NH_4)_2S$ Solution

Wash Number	Time, minutes	Temperature, °F	Circulation Rate, ml./min. $(NH_4)_2S$	H_2O	ml. $(NH_4)_2S$ Added	ml. $(NH_4)_2S$ + Sulfur Drained
1	0	100	35		100	
	5	95	35			
	10	101	35			
	15	101	35			52
2	0	105	35		50	
	5	101	35			
	10	102	35			
	15	102	35			47
3	0	110	35		50	
	5	102	35			
	10	103	35			
	15	103	35			49
4	0	100	35		50	
	5	103	35			
	10	103	35			
	15	103	35			47
5	0	110	35		50	
	5	102	35			
	10	102	35			
	15	102	35			49
6	0	104	35		50	
	5	102	35			
	10	105	35			
	15	105	35			51
7	0	95	35		50	
	5	100	35			
	10	100	35			
	15	100	35			51
8	0	106	35		50	
	5	100	35			
	10	101	35			
	15	102	35			48
9	0	91	35		50	
	5	95	35			
	10	100	35			
	15	100	35			48
10	0	91	35		50	
	5	99	35			
	10	101	35			
	15	100	35			53.5
11	0	108	35		50	
	5	100	35			
	10	102	35			
	15	102	35			30
12	0	99	35		50	
	5	105	35			
	10	101	35			
	15	98				55
13	0	90	35		50	
	5	99	35			
	10	100	35			
	15	100				51
14	0	91	35		50	
	5	100	35			
	10	100	35			
	15	101				48
15	0	91	35		50	
	5	100	35			
	10	101	35			
	15	103	35			80
1	0	95		60	50*	
	5	96		60		
	10	100		60		
	15	103		60		45**
2	0	90		60	50*	
	5	108		60		
	10	112		60		
	15	115		60		59**
3***	0	120		60	50*	
	5	128		60		
	10	125		60		
	15	118		60		49**

*ml. H_2O Added
**ml. H_2O Drained
***After water washing, steamed for 2 hours at 1,000 cc/min.

RUN: RXT-7-5C

CARBON USED: RXT-7-5D SOLVENT USED: 15% $(NH_4)_2S$ Solution

Wash Number	Time, minutes	Temperature, °F	Circulation Rate, ml./min. $(NH_4)_2S$	Circulation Rate, ml./min. H_2O	ml. $(NH_4)_2S$ Added	ml. $(NH_4)_2S$ Sulfur Drained
1	0	100	35		100	
	5	85	35			
	10	90	35			
	15	103	35			49
2	0	100	35		50	
	5	100	35			
	10	102	35			
	15	102	35			46
3	0	100	35		50	
	5	100	35			
	10	100	35			
	15	100	35			41
4	0	100	35		50	
	5	100	35			
	10	100	35			
	15	100	35			50
5	0	100	35		50	
	5	100	35			
	10	100	35			
	15	100	35			59
6	0	100	35		50	
	5	100	35			
	10	100	35			
	15	100	35			50
7	0	100	35		50	
	5	100	35			
	10	100	35			
	15	100	35			49
8	0	100	35		50	
	5	100	35			
	10	100	35			
	15	100	35			60
9	0	100	35		50	
	5	100	35			
	10	100	35			
	15	100	35			48
10	0	100	35		50	
	5	100	35			
	10	100	35			
	15	100	35			25
11	0	100	35		50	
	5	100	35			
	10	100	35			
	15	100	35			42
12	0	100	35		50	
	5	100	35			
	10	100	35			
	15	100	35			50
13	0	100	35		50	
	5	100	35			
	10	100	35			
	15	100	35			43
14	0	100	35		50	
	5	100	35			
	10	100	35			
	15	100	35			49
15	0	100	35		50	
	5	100	35			
	10	100	35			
	15	100	35			50
1	0	100		65	100*	
	5	100		65		
	10	100		65		
	15	100		65		58**
2	0	100		65	50*	
	5	100		65		
	10	100		65		
	15	100		65		50**
3***	0	100		65	50*	
	5	100		65		
	10	100		65		
	15	100		65		46**

*ml. H_2O Added
**ml. H_2O Drained
***After water washing, steamed for 2 hours at 1,000 cc/min.

RUN: RXT-7-6C

CARBON USED: RXT-7-6B SOLVENT USED: 15% $(NH_4)_2S$ Solution

Wash Number	Time, minutes	Temperature, °F	Circulation Rate, ml./min. $(NH_4)_2S$	Circulation Rate, ml./min. H_2O	ml. $(NH_4)_2S$ Added	ml. $(NH\ )\ S$ + Sulfur Drained
1	0	100	35		91	
	5	120	35			
	10	100	35			
	15	100	35			45
2	0	100	35		50	
	5	100	35			
	10	100	35			
	15	100	35			
3	0	95	35		50	
	5	100	35			
	10	100	35			
	15	100	35			49
4	0	100	35		50	
	5	100	35			
	10	100	35			
	15	105	35			46
5	0	105	35		50	
	5	105	35			
	10	105	35			
	15	105	35			46
6	0	110	35		50	
	5	105	35			
	10	100	35			
	15	100	35			54
7	0	95	35		50	
	5	100	35			
	10	100	35			
	15	100	35			53
8	0	105	35		50	
	5	100	35			
	10	100	35			
	15	100	35			42
9	0	95	35		50	
	5	100	35			
	10	100	35			
	15	100	35			48
10	0	95	35		50	
	5	100	35			
	10	100	35			
	15	100	35			
11	0	95	35		50	
	5	100	35			
	10	100	35			
	15	100	35			57
12	0	105	35		50	
	5	100	35			
	10	100	35			
	15	100	35			44
13	0	105	35		50	
	5	100	35			
	10	100	35			
	15	100	35			50
14	0	95	35		50	
	5	100	35			
	10	100	35			
	15	100	35			51
15	0	105	35		50	
	5	100	35			
	10	100	35			
	15		35			43
1	0	100		60	100*	
	5	100		60		
	10	105		60		
	15	105		60		72
2	0	105		60	50*	
	5	105		60		
	10	105		60		
	15			60		52**
3***	0	111		60	56*	
	5	110		60		
	10	110		60		
	15	110		60		75**

*ml. H_2O Added
**ml. H_2O Drained
***After water washing, steamed for 2 hours at 1,000 cc/min.

APPENDIX A-16-5

PORE VOLUME DISTRIBUTION RUNS FOR $(NH_4)_2S$ EXTRACTED AND H_2S GENERATION SAMPLES AFTER SIXTH CYCLE

SAMPLE: EXV-1

REL P	VOLUME
0.1428	0.3628
0.1789	0.3686
0.2149	0.3733
0.3231	0.3851
0.4313	0.3950
0.5395	0.4031
0.6477	0.4103
0.7559	0.4168
0.8641	0.4242
0.9722	0.4350

S 667.4
C -22.544
R 0.9985

PORE	RADIUS	VOL	CUMV
1000.	500.	0.0022	0.0022
500.	400.	0.0009	0.0031
400.	300.	0.0014	0.0045
300.	200.	0.0024	0.0070
200.	150.	0.0022	0.0092
150.	100.	0.0040	0.0131
100.	90.	0.0012	0.0144
90.	80.	0.0015	0.0159
80.	70.	0.0019	0.0178
70.	60.	0.0025	0.0203
60.	50.	0.0034	0.0237
50.	45.	0.0023	0.0260
45.	40.	0.0028	0.0288
40.	35.	0.0035	0.0323
35.	30.	0.0047	0.0369
30.	25.	0.0070	0.0439
25.	20.	0.0115	0.0554
20.	18.	0.0071	0.0625
18.	16.	0.0096	0.0721
16.	14.	0.0123	0.0844
14.	12.	0.0149	0.0994
12.	10.	0.0204	0.1198

SAMPLE: RXT-6-6C

REL P	VOLUME
0.1487	0.4417
0.1863	0.4461
0.2238	0.4532
0.3365	0.4688
0.4492	0.4794
0.5619	0.4838
0.6745	0.4922
0.7872	0.4995
0.8924	0.5075
0.9900	0.5156

S 794.2
C -20.632
R 0.9986

PORE RADIUS		VOL	CUMV
1000.	500.	0.0006	0.0006
500.	400.	0.0004	0.0010
400.	300.	0.0008	0.0018
300.	200.	0.0017	0.0034
200.	150.	0.0018	0.0053
150.	100.	0.0037	0.0090
100.	90.	0.0012	0.0102
90.	80.	0.0015	0.0117
80.	70.	0.0020	0.0137
70.	60.	0.0026	0.0163
60.	50.	0.0037	0.0199
50.	45.	0.0024	0.0223
45.	40.	0.0030	0.0253
40.	35.	0.0039	0.0292
35.	30.	0.0059	0.0350
30.	25.	0.0081	0.0431
25.	20.	0.0058	0.0489
20.	18.	0.0043	0.0532
18.	16.	0.0100	0.0632
16.	14.	0.0153	0.0785
14.	12.	0.0215	0.1000
12.	10.	0.0301	0.1301

SAMPLE: RXT-7-6C

REL P	VOLUME
0.1487	0.3417
0.1863	0.3490
0.2238	0.3530
0.3365	0.3646
0.4492	0.3742
0.5619	0.3823
0.6745	0.3895
0.7872	0.3959
0.8999	0.4031
0.9900	0.4099

S 617.8
C -20.604
R 0.9983

PORE RADIUS		VOL	CUMV
1000.	500.	0.0008	0.0008
500.	400.	0.0004	0.0012
400.	300.	0.0007	0.0020
300.	200.	0.0015	0.0034
200.	150.	0.0016	0.0050
150.	100.	0.0031	0.0081
100.	90.	0.0010	0.0091
90.	80.	0.0013	0.0104
80.	70.	0.0016	0.0120
70.	60.	0.0022	0.0142
60.	50.	0.0031	0.0173
50.	45.	0.0021	0.0194
45.	40.	0.0026	0.0220
40.	35.	0.0034	0.0254
35.	30.	0.0047	0.0301
30.	25.	0.0070	0.0371
25.	20.	0.0112	0.0483
20.	18.	0.0071	0.0554
18.	16.	0.0093	0.0647
16.	14.	0.0119	0.0766
14.	12.	0.0147	0.0914
12.	10.	0.0185	0.1099

APPENDIX A-17

POST-TREATMENT RESULTS OF AMMONIUM SULFIDE SOLVENT EXTRACTED CARBON

		Page
1.	Experimental Conditions for Isothermal and Thermal Post-Treatments of $(NH_4)_2S$ Extracted Carbon	472
2.	Experimental Results for Determination of the SO_2 Activity of Post-Treated $(NH_4)_2S$ Extracted Carbon Samples Using Differential Rate Apparatus	475
3.	SO_2 Sorption Rates for Determination of the SO_2 Activity of Post-Treated $(NH_4)_2S$ Extracted Carbon Samples Using Differential Rate Apparatus	486

APPENDIX A-17-1

EXPERIMENTAL CONDITIONS FOR ISOTHERMAL AND THERMAL POST-TREATMENTS OF $(NH_4)_2S$ EXTRACTED CARBON

RUN NO.:	RXT-7-6C-1
TYPE CARBON:	RXT-7-6C
DESCRIPTION OF RUN:	Run at 1000°F for 2 hrs. with 30% H_2
EXPERIMENTAL CONDITIONS:	Weight of Carbon: 0.5 gms Bed Temperature: 1000°F Inlet H_2 Concentration: 30% Gas Flows: N_2 - 19.4 cc/min.; H_2 - 8.3 cc/min.

RUN NO.:	RXT-7-6C-4
TYPE CARBON:	RXT-7-6C
DESCRIPTION OF RUN:	Run at 800°F for 4 hrs. with H_2; 2 hrs. preheat time
EXPERIMENTAL CONDITIONS:	Weight of Carbon: 0.5 gms Bed Temperature: 800°F Inlet H_2 Concentration: 30% Gas Flows: N_2 - 19.4 cc/min.; H_2 - 8.3 cc/min.

RUN NO.:	RXT-7-6C-5
TYPE CARBON:	RXT-7-6C
DESCRIPTION OF RUN:	Run at 1200°F for 4 hrs. with H_2; 2 hrs. preheat time
EXPERIMENTAL CONDITIONS:	Weight of Carbon: 0.5 gms Bed Temperature: 1200°F Inlet H_2 Concentration: 30% Gas Flows: N_2 - 19.4 cc/min.; H_2 - 8.3 cc/min.

RUN NO.:	RXT-7-6C-6
TYPE CARBON:	RXT-7-6C
DESCRIPTION OF RUN:	Run at 1000°F for 4 hrs. with H_2
EXPERIMENTAL CONDITIONS:	Weight of Carbon: 0.5 gms Bed Temperature: 1000°F Inlet H_2 Concentration: 30% Gas Flows: N_2 - 19.4 cc/min.; H_2 - 8.3 cc/min.

RUN NO.:	RXT-7-6C-7
TYPE CARBON:	RXT-7-6C
DESCRIPTION OF RUN:	Run at 1000°F for 4 hrs. with N_2; 2 hrs. preheat period
EXPERIMENTAL CONDITIONS:	Weight of Carbon: 0.5 gms Bed Temperature: 1000°F Inlet H_2 Concentration: 0 Gas Flows: N_2 - 27.7 cc/min.; H_2 - 0

RUN NO.:	RXT-7-6C-8
TYPE CARBON:	RXT-7-6C
DESCRIPTION OF RUN:	Run at 1000°F for 4 hrs. with CO; 2 hrs. preheat period
EXPERIMENTAL CONDITIONS:	Weight of Carbon: 0.5 gms Bed Temperature: 1000°F Inlet CO Concentration: 30% Gas Flows: N_2 - 19.4 cc/min.; CO - 8.3 cc/min.

RUN NO.:	RXT-7-6C-9
TYPE CARBON:	RXT-7-6C
WEIGHT OF CARBON:	0.5 gms
DESCRIPTION OF RUN:	(1) Washed for 15 minutes with 50 ml. of a 2% NH_4OH solution at 77°F (2) Three distilled H_2O washings of 50 ml for 15 minutes each at 77°F (3) Heat the sample in a 1,000 scc/min. purge of N_2 for 1 hour at 400°F

RUN NO.:	Virgin Washing with $(NH_4)OH$
TYPE CARBON:	Virgin, C-70-77
WEIGHT OF CARBON:	0.5 gms
DESCRIPTION OF RUN:	Same as RXT-7-6C-9

APPENDIX A-17-2

EXPERIMENTAL RESULTS FOR DETERMINATION OF THE SO_2 ACTIVITY OF POST-TREATED $(NH_4)_2S$ EXTRACTED CARBON SAMPLES USING DIFFERENTIAL RATE APPARATUS

CALCULATIONS FOR GRAVIMETRIC FLOW EXPERIMENTS

RUN NO. =	180	SO2 =	2000. PPM	TEMP =	200. DEG. F.
DATE =	9 9 71	NO =	150. PPM	FLU =	1500. CC/MIN
DRY WT.=	95.10 MG	O2 =	3.5 %	H2SO4 =	75.14 %
CORRECTION=	-6.18 MG	H2O =	6.0 %		

TIME (MIN)	MASS DIAL	CHART INCHES	PICKUP (MG H2SO4)
1.00	0.4750	7.90	1.61998
2.00	0.4750	8.04	1.75998
3.00	0.4750	8.16	1.87997
4.00	0.4750	8.27	1.98997
5.00	0.4750	8.38	2.09998
6.00	0.4750	8.49	2.20998
7.00	0.4750	8.60	2.31998
8.00	0.4750	8.70	2.41998
9.00	0.4750	8.80	2.51997
10.00	0.4750	8.91	2.62997
11.00	0.4750	9.02	2.73997
12.00	0.4750	9.14	2.85999
13.00	0.4750	9.22	2.93997
14.00	0.4750	9.31	3.02998
15.00	0.4750	9.42	3.13998
16.00	0.5200	0.52	3.23997
17.00	0.5200	0.62	3.33998
18.00	0.5200	0.71	3.42998
19.00	0.5200	0.81	3.52998
20.00	0.5200	0.91	3.62997
21.00	0.5200	1.02	3.73997
22.00	0.5200	1.14	3.85999
23.00	0.5200	1.25	3.96999
24.00	0.5200	1.36	4.07997
25.00	0.5200	1.47	4.18997
26.00	0.5200	1.58	4.29997
27.00	0.5200	1.69	4.40997
28.00	0.5200	1.79	4.50998
29.00	0.5200	1.90	4.61998
30.00	0.5200	2.00	4.71999
33.00	0.5200	2.32	5.03998
36.00	0.5200	2.66	5.37997
39.00	0.5200	2.98	5.69998
42.00	0.5200	3.30	6.01997
45.00	0.5200	3.63	6.36998
48.00	0.5200	3.96	6.67998
51.00	0.5200	4.28	6.99998
54.00	0.5200	4.60	7.31998
57.00	0.5200	4.91	7.62997
60.00	0.5200	5.23	7.94996
63.00	0.5200	5.56	8.27998
66.00	0.5200	5.89	8.60999
69.00	0.5200	6.21	8.92998
72.00	0.5200	6.52	9.23997
75.00	0.5200	6.86	9.57997
78.00	0.5200	7.19	9.90997
81.00	0.5200	7.51	10.22998
84.00	0.5200	7.83	10.54997
87.00	0.5200	8.16	10.87997
90.00	0.5200	8.47	11.18997
93.00	0.5200	8.79	11.50998
96.00	0.5200	9.10	11.81998
99.00	0.5650	0.34	12.05998
102.00	0.5650	0.66	12.37997
105.00	0.5650	0.97	12.68997
108.00	0.5650	1.27	12.98997
111.00	0.5650	1.57	13.28998
114.00	0.5650	1.87	13.58998
117.00	0.5650	2.17	13.88998
120.00	0.5650	2.47	14.18997
126.00	0.5650	3.05	14.76997
132.00	0.5650	3.62	15.33998
138.00	0.5650	4.19	15.90997
144.00	0.5650	4.77	16.48997
150.00	0.5650	5.32	17.03998
156.00	0.5650	5.88	17.59998
162.00	0.5650	6.41	18.12997
168.00	0.5650	6.95	18.66998
174.00	0.5650	7.49	19.20998
180.00	0.5650	8.00	19.71999
186.00	0.5650	8.50	20.21999
192.00	0.6050	0.95	20.66998
198.00	0.6050	1.41	21.12997
204.00	0.6050	1.85	21.56998
210.00	0.6050	2.29	22.00998
216.00	0.6050	2.72	22.43997
222.00	0.6050	3.15	22.86998
228.00	0.6050	3.56	23.27998
234.00	0.6050	3.97	23.68997
240.00	0.6050	4.38	24.09998
246.00	0.6050	4.77	24.48997
252.00	0.6050	5.16	24.87997
258.00	0.6050	5.54	25.25998
264.00	0.6050	5.92	25.63998
270.00	0.6050	6.29	26.00998
276.00	0.6050	6.66	26.37997
282.00	0.6050	7.00	26.71999
288.00	0.6050	7.37	27.08998
294.00	0.6050	7.70	27.41998
300.00	0.6050	8.04	27.75998

CALCULATIONS FOR GRAVIMETRIC FLOW EXPERIMENTS

RUN NO. =	189	SO2 =	2000. PPM	TEMP =	200. DEG. F.
DATE =	8 31 71	NO =	150. PPM	F(T) =	1500. CC/MIN
DRY WT.=	98.86 MG	O2 =	3.5 %	H2SO4 =	75.55 %
CORRECTION=	-6.22 MG	H2O =	6.0 %		

TIME (MIN)	MASS DIAL	CHART INCHES	PICKUP (MG H2SO4)
1.00	0.4900	7.60	0.51999
2.00	0.4900	7.91	0.82999
3.00	0.4900	8.18	1.09999
4.00	0.4900	8.38	1.29999
5.00	0.4900	8.56	1.48000
6.00	0.4900	8.72	1.63998
7.00	0.5300	0.86	1.77998
8.00	0.5300	1.03	1.95000
9.00	0.5300	1.21	2.12999
10.00	0.5300	1.37	2.28999
11.00	0.5300	1.53	2.45000
12.00	0.5300	1.69	2.60999
13.00	0.5300	1.85	2.76999
14.00	0.5300	2.00	2.92000
15.00	0.5300	2.17	3.09000
16.00	0.5300	2.32	3.23999
17.00	0.5300	2.47	3.38998
18.00	0.5300	2.61	3.52998
19.00	0.5300	2.77	3.68999
20.00	0.5300	2.90	3.81999
21.00	0.5300	3.02	3.93999
22.00	0.5300	3.16	4.07999
23.00	0.5300	3.28	4.20000
24.00	0.5300	3.40	4.31999
25.00	0.5300	3.50	4.42000
26.00	0.5300	3.60	4.51999
27.00	0.5300	3.70	4.62000
28.00	0.5300	3.80	4.71999
29.00	0.5300	3.90	4.81999
30.00	0.5300	3.99	4.90999
33.00	0.5300	4.34	5.25999
36.00	0.5300	4.68	5.59999
39.00	0.5300	5.00	5.92000
42.00	0.5300	5.31	6.23000
45.00	0.5300	5.61	6.52998
48.00	0.5300	5.92	6.84000
51.00	0.5300	6.21	7.12999
54.00	0.5300	6.51	7.42999
57.00	0.5300	6.81	7.73000
60.00	0.5300	7.10	8.01999
63.00	0.5300	7.39	8.31000
66.00	0.5300	7.68	8.59999
69.00	0.5300	7.97	8.88998
72.00	0.5300	8.25	9.17000
75.00	0.5300	8.52	9.43999
78.00	0.5300	8.81	9.73000
81.00	0.5300	9.09	10.00999
84.00	0.5750	0.30	10.21999
87.00	0.5750	0.59	10.50999
90.00	0.5750	0.87	10.78999
93.00	0.5750	1.16	11.07999
96.00	0.5750	1.43	11.34999
99.00	0.5750	1.71	11.62999
102.00	0.5750	1.99	11.90999
105.00	0.5750	2.26	12.17999
108.00	0.5750	2.54	12.45999
111.00	0.5750	2.81	12.73000
114.00	0.5750	3.09	13.00999
117.00	0.5750	3.35	13.26999
120.00	0.5750	3.61	13.52998
126.00	0.5900	1.09	14.00999
132.00	0.5900	1.63	14.54999
138.00	0.5900	2.17	15.09000
144.00	0.5900	2.69	15.60999
150.00	0.5900	3.20	16.12000
156.00	0.5900	3.71	16.62999
162.00	0.5900	4.22	17.13998
168.00	0.5900	4.73	17.64999
174.00	0.5900	5.21	18.12999
180.00	0.5900	5.69	18.60999
186.00	0.5900	6.17	19.09000
192.00	0.5900	6.66	19.57999
198.00	0.5900	7.16	20.07999
204.00	0.5900	7.64	20.56000
210.00	0.5900	8.13	21.04999
216.00	0.5900	8.61	21.52998
222.00	0.5900	9.08	21.99998
228.00	0.5900	9.54	22.45999
234.00	0.5900	10.00	22.92000
240.00	0.6400	0.40	23.31999
246.00	0.6400	0.83	23.74998
252.00	0.6400	1.26	24.17999
258.00	0.6400	1.68	24.59999
264.00	0.6400	2.09	25.00999
270.00	0.6400	2.49	25.40999
276.00	0.6400	2.89	25.81000
282.00	0.6400	3.27	26.18999
288.00	0.6400	3.65	26.56999
294.00	0.6400	4.02	26.93999
300.00	0.6400	4.40	27.31999

CALCULATIONS FOR GRAVIMETRIC FLOW EXPERIMENTS

RUN NO. = 191 SO2 = 2000. PPM TEMP = 200. DEG. F.
DATE = 9 2 71 NO = 150. PPM F(T) = 1500. CC/MIN
DRY WT.= 100.56 MG O2 3.5 % H2SO4 = 76.20 %
CORRECTION= -6.43 MG H2O = 6.0 %

TIME (MIN)	MASS DIAL	CHART INCHES	PICKUP (MG H2SO4)
1.00	0.5000	7.59	0.59999
2.00	0.5000	7.84	0.83998
3.00	0.5000	8.05	1.05998
4.00	0.5000	8.24	1.24998
5.00	0.5000	8.41	1.41998
6.00	0.5000	8.58	1.58998
7.00	0.5000	8.73	1.73999
8.00	0.5000	8.88	1.88998
9.00	0.5000	9.01	2.01999
10.00	0.5000	9.15	2.15999
11.00	0.5000	9.28	2.28999
12.00	0.5450	0.32	2.32997
13.00	0.5450	0.45	2.45998
14.00	0.5450	0.57	2.57997
15.00	0.5450	0.67	2.67998
16.00	0.5450	0.78	2.78998
17.00	0.5450	0.88	2.88997
18.00	0.5450	0.98	2.98997
19.00	0.5450	1.07	3.07997
20.00	0.5450	1.16	3.16997
21.00	0.5450	1.25	3.25998
22.00	0.5450	1.35	3.35997
23.00	0.5450	1.44	3.44997
24.00	0.5450	1.52	3.52997
25.00	0.5450	1.61	3.61996
26.00	0.5450	1.70	3.70998
27.00	0.5450	1.78	3.78998
28.00	0.5450	1.85	3.85997
29.00	0.5450	1.92	3.92998
30.00	0.5450	2.00	4.00998
33.00	0.5450	2.27	4.27997
36.00	0.5450	2.50	4.50998
39.00	0.5450	2.74	4.74997
42.00	0.5450	2.97	4.97997
45.00	0.5450	3.21	5.21997
48.00	0.5450	3.44	5.44997
51.00	0.5450	3.66	5.66997
54.00	0.5450	3.87	5.87997
57.00	0.5450	4.09	6.09998
60.00	0.5450	4.30	6.30997
63.00	0.5450	5.41	7.41997
66.00	0.5450	4.72	6.72997
69.00	0.5450	4.93	6.93997
72.00	0.5450	5.14	7.14998
75.00	0.5450	5.34	7.34998
78.00	0.5450	5.55	7.55997
81.00	0.5450	5.75	7.75998
84.00	0.5450	5.95	7.95998
87.00	0.5450	6.15	8.15997
90.00	0.5450	6.35	8.35997
93.00	0.5450	6.54	8.54997
96.00	0.5450	6.73	8.73997
99.00	0.5450	6.91	8.91997
102.00	0.5450	7.10	9.10997
105.00	0.5450	7.29	9.29997
108.00	0.5450	7.48	9.48997
111.00	0.5450	7.66	9.66997
114.00	0.5450	7.84	9.84998
117.00	0.5450	8.02	10.02997
120.00	0.5450	8.20	10.20998
126.00	0.5450	8.56	10.56998
132.00	0.5850	0.93	10.93997
138.00	0.5850	1.30	11.30997
144.00	0.5850	1.68	11.68997
150.00	0.5850	2.04	12.04997
156.00	0.5850	2.40	12.40997
162.00	0.5850	2.75	12.75998
168.00	0.5850	3.09	13.09998
174.00	0.5850	3.42	13.42998
180.00	0.5850	3.77	13.77997
186.00	0.5850	4.10	14.10997
192.00	0.5850	4.43	14.43997
198.00	0.5850	4.76	14.76997
204.00	0.5850	5.07	15.07997
210.00	0.5850	5.39	15.39998
216.00	0.5850	5.72	15.72997
222.00	0.5850	6.05	16.05997
228.00	0.5850	6.37	16.37997
234.00	0.5850	6.69	16.69997
240.00	0.5850	7.01	17.01997
246.00	0.5850	7.32	17.32997
252.00	0.5850	7.63	17.63997
258.00	0.5850	7.94	17.94997
264.00	0.5850	8.24	18.24997
270.00	0.5850	8.54	18.54997
276.00	0.6250	0.82	18.82999
282.00	0.6250	1.12	19.12999
288.00	0.6250	1.42	19.42999
294.00	0.6250	1.71	19.71999
300.00	0.6250	1.99	19.99998

CALCULATIONS FOR GRAVIMETRIC FLOW EXPERIMENTS

RUN NO. = 192 SO2 = 2000. PPM TEMP = 200. DEG. F.
DATE = 9 3 71 NO = 150. PPM F(T) = 1500. CC/MIN
DRY WT.= 100.90 MG O2 = 3.5 % H2SO4 = 76.62 %
CORRECTION= -6.13 MG H2O = 6.0 %

TIME (MIN)	MASS DIAL	CHART INCHES	PICKUP (MG H2SO4)
1.00	0.5000	8.29	1.25999
2.00	0.5000	8.73	1.70000
3.00	0.5000	9.14	2.11000
4.00	0.5000	9.52	2.48999
5.00	0.5450	0.73	2.69998
6.00	0.5450	1.08	3.04997
7.00	0.5450	1.39	3.35999
8.00	0.5450	1.69	3.65997
9.00	0.5450	1.95	3.91998
10.00	0.5450	2.21	4.17998
11.00	0.5450	2.46	4.42998
12.00	0.5450	2.71	4.67998
13.00	0.5450	2.94	4.90997
14.00	0.5450	3.16	5.12997
15.00	0.5450	3.37	5.33998
16.00	0.5450	3.60	5.56998
17.00	0.5450	3.80	5.76997
18.00	0.5450	4.00	5.96999
19.00	0.5450	4.20	6.16998
20.00	0.5450	4.40	6.36998
21.00	0.5450	4.59	6.55998
22.00	0.5450	4.78	6.74998
23.00	0.5450	4.94	6.90997
24.00	0.5450	5.11	7.07997
25.00	0.5450	5.29	7.25998
26.00	0.5450	5.45	7.41998
27.00	0.5450	5.61	7.57997
28.00	0.5450	5.79	7.75998
29.00	0.5450	5.96	7.92998
30.00	0.5450	6.13	8.09998
33.00	0.5450	6.66	8.62997
36.00	0.5450	7.14	9.10999
39.00	0.5450	7.62	9.58998
42.00	0.5450	8.10	10.06998
45.00	0.5450	8.59	10.55998
48.00	0.5900	0.01	10.97998
51.00	0.5900	0.50	11.46999
54.00	0.5900	0.99	11.95998
57.00	0.5900	1.47	12.43997
60.00	0.5900	1.92	12.88998
63.00	0.5900	2.39	13.35999
66.00	0.5900	2.83	13.79997
69.00	0.5900	3.29	14.25998
72.00	0.5900	3.93	14.89998
75.00	0.5900	4.19	15.15997
78.00	0.5900	4.63	15.59998
81.00	0.5900	5.08	16.04997
84.00	0.5900	5.51	16.47998
87.00	0.5900	5.95	16.91998
90.00	0.6200	0.31	17.27998
93.00	0.6200	0.77	17.73997
96.00	0.6200	1.19	18.15997
99.00	0.6200	1.60	18.56998
102.00	0.6200	2.00	18.96999
105.00	0.6200	2.40	19.36998
108.00	0.6200	2.80	19.76997
111.00	0.6200	3.20	20.16998
114.00	0.6200	3.59	20.55998
117.00	0.6200	3.98	20.94998
120.00	0.6200	4.37	21.33998
126.00	0.6200	5.13	22.09998
132.00	0.6200	5.89	22.85999
138.00	0.6200	6.60	23.56998
144.00	0.6200	7.30	24.26997
150.00	0.6200	7.99	24.95998
156.00	0.6200	8.67	25.63998
162.00	0.6200	9.34	26.30998
168.00	0.6200	9.99	26.95998
174.00	0.6700	0.47	27.43997
180.00	0.6700	1.10	28.06998
186.00	0.6700	1.69	28.65997
192.00	0.6700	2.26	29.22998
198.00	0.6700	2.82	29.78998
204.00	0.6700	3.39	30.35999
210.00	0.6700	3.91	30.87997
216.00	0.6700	4.44	31.40997
222.00	0.6700	4.95	31.91998
228.00	0.6700	5.44	32.40997
234.00	0.6700	5.94	32.90997
240.00	0.6700	6.41	33.37997
246.00	0.6700	6.89	33.85999
252.00	0.6700	7.32	34.28998
258.00	0.6700	7.78	34.74998
264.00	0.6700	8.21	35.17998
270.00	0.6700	8.60	35.56998
276.00	0.6700	9.00	35.96999
282.00	0.7150	0.29	36.25998
288.00	0.7150	0.64	36.60999
294.00	0.7150	0.99	36.95998
300.00	0.7150	1.34	37.30998

CALCULATIONS FOR GRAVIMETRIC FLOW EXPERIMENTS

RUN NO. = 193 SO2 = 2000. PPM TEMP = 200. DEG. F.
DATE = 9 7 71 NO = 150. PPM F(T) = 1500. CC/MIN
DRY WT.= 102.82 MG O2 = 3.5 % H2SO4 = 76.19 %
CORRECTION= -6.18 MG H2O = 6.0 %

TIME (MIN)	MASS DIAL	CHART INCHES	PICKUP (MG H2SO4)
1.00	0.5100	7.63	0.62997
2.00	0.5100	7.89	0.88998
3.00	0.5100	8.16	1.15997
4.00	0.5100	8.40	1.39998
5.00	0.5100	8.65	1.64998
6.00	0.5100	8.90	1.89998
7.00	0.5100	9.13	2.12997
8.00	0.5550	0.27	2.26997
9.00	0.5550	0.49	2.48997
10.00	0.5550	0.70	2.69998
11.00	0.5550	0.91	2.90997
12.00	0.5550	1.11	3.10997
13.00	0.5550	1.30	3.29997
14.00	0.5550	1.49	3.48997
15.00	0.5550	1.67	3.66998
16.00	0.5550	1.83	3.82997
17.00	0.5550	2.00	3.99998
18.00	0.5550	2.17	4.16998
19.00	0.5550	2.34	4.33998
20.00	0.5550	2.49	4.48997
21.00	0.5550	2.64	4.63998
22.00	0.5550	2.80	4.79997
23.00	0.5550	2.94	4.93997
24.00	0.5550	3.09	5.08998
25.00	0.5550	3.22	5.21997
26.00	0.5550	3.37	5.36998
27.00	0.5550	3.51	5.50998
28.00	0.5550	3.63	5.62997
29.00	0.5550	3.77	5.76997
30.00	0.5550	3.90	5.89998
33.00	0.5550	4.30	6.29997
36.00	0.5550	4.68	6.67996
39.00	0.5550	5.05	7.04997
42.00	0.5550	5.41	7.40997
45.00	0.5550	5.79	7.78998
48.00	0.5550	6.17	8.16998
51.00	0.5550	6.52	8.51997
54.00	0.5550	6.89	8.88998
57.00	0.5550	7.26	9.25998
60.00	0.5550	7.61	9.60997
63.00	0.5550	7.98	9.97998
66.00	0.5550	8.32	10.31998
69.00	0.5550	8.68	10.67998
72.00	0.5550	9.02	11.01997
75.00	0.5550	9.38	11.37997
78.00	0.6000	0.87	11.86998
81.00	0.6000	1.22	12.21997
84.00	0.6000	1.59	12.58998
87.00	0.6000	1.94	12.93997
90.00	0.6000	2.30	13.29997
93.00	0.6000	2.66	13.65997
96.00	0.6000	3.00	13.99998
99.00	0.6000	3.36	14.35997
102.00	0.6000	3.70	14.69998
105.00	0.6000	4.04	15.03998
108.00	0.6000	4.37	15.36998
111.00	0.6000	4.70	15.69998
114.00	0.6000	5.02	16.01997
117.00	0.6000	5.34	16.33998
120.00	0.6000	5.66	16.65997
126.00	0.6000	6.29	17.28998
132.00	0.6000	6.91	17.90997
138.00	0.6350	0.44	18.43997
144.00	0.6350	1.02	19.01997
150.00	0.6350	1.60	19.59998
156.00	0.6350	2.16	20.15997
162.00	0.6350	2.71	20.70998
168.00	0.6350	3.26	21.25998
174.00	0.6350	3.80	21.79997
180.00	0.6350	4.35	22.34998
186.00	0.6350	4.89	22.88998
192.00	0.6350	5.41	23.40997
198.00	0.6350	5.93	23.92998
204.00	0.6350	6.44	24.43997
210.00	0.6350	6.96	24.95998
216.00	0.6350	7.45	25.44998
222.00	0.6350	7.94	25.93997
228.00	0.6350	8.42	26.41998
234.00	0.6350	8.90	26.89998
240.00	0.6800	0.38	27.37997
246.00	0.6800	0.82	27.81998
252.00	0.6800	1.26	28.25998
258.00	0.6800	1.70	28.69998
264.00	0.6800	2.12	29.11998
270.00	0.6800	2.55	29.54997
276.00	0.6800	2.95	29.94998
282.00	0.6800	3.38	30.37997
288.00	0.6800	3.79	30.78998
294.00	0.6800	4.19	31.18997
300.00	0.6800	4.58	31.57997

CALCULATIONS FOR GRAVIMETRIC FLOW EXPERIMENTS

RUN NO. = 194 SO2 = 2000. PPM TEMP = 200. DEG. F.
DATE = 9 9 71 NO = 150. PPM FLT) = 1500. CC/MIN
DRY WT.= 103.30 MG O2 = 3.5 % H2SO4 = 75.69 %
CORRECTION= -5.98 MG H2O = 6.0 %

TIME (MIN)	MASS DIAL	CHART INCHES	PICKUP (MG H2SO4)
1.00	0.5150	7.78	1.49998
2.00	0.5150	7.87	1.58998
3.00	0.5150	7.96	1.67998
4.00	0.5150	8.06	1.77998
5.00	0.5150	8.16	1.87997
6.00	0.5150	8.26	1.97998
7.00	0.5150	8.37	2.08998
8.00	0.5150	8.47	2.18997
9.00	0.5150	8.58	2.29997
10.00	0.5150	8.67	2.38998
11.00	0.5150	8.74	2.45998
12.00	0.5150	8.82	2.53998
13.00	0.5150	8.90	2.61998
14.00	0.5150	8.99	2.70998
15.00	0.5150	9.08	2.79997
16.00	0.5600	0.12	2.83998
17.00	0.5600	0.20	2.91998
18.00	0.5600	0.29	3.00998
19.00	0.5600	0.37	3.08998
20.00	0.5600	0.45	3.16998
21.00	0.5600	0.53	3.24998
22.00	0.5600	0.61	3.32997
23.00	0.5600	0.69	3.40997
24.00	0.5600	0.76	3.47998
25.00	0.5600	0.83	3.54997
26.00	0.5600	0.89	3.60999
27.00	0.5600	0.96	3.67998
28.00	0.5600	1.01	3.72998
29.00	0.5600	1.09	3.80998
30.00	0.5600	1.15	3.86998
33.00	0.5600	1.32	4.03998
36.00	0.5600	1.50	4.21999
39.00	0.5600	1.68	4.39998
42.00	0.5600	1.85	4.56998
45.00	0.5600	2.01	4.72998
48.00	0.5600	2.18	4.89998
51.00	0.5600	2.34	5.05998
54.00	0.5600	2.50	5.21999
57.00	0.5600	2.67	5.38998
60.00	0.5600	2.82	5.53998
63.00	0.5600	2.96	5.67998
66.00	0.5600	3.10	5.81998
69.00	0.5600	3.25	5.96999
72.00	0.5600	3.39	6.10999
75.00	0.5600	3.53	6.24998
78.00	0.5600	3.67	6.38998
81.00	0.5600	3.80	6.51997
84.00	0.5600	3.94	6.65997
87.00	0.5600	4.08	6.79997
90.00	0.5600	4.21	6.92998
93.00	0.5600	4.34	7.05998
96.00	0.5600	4.47	7.18997
99.00	0.5600	4.59	7.30998
102.00	0.5600	4.72	7.43997
105.00	0.5600	4.87	7.58998
108.00	0.5600	5.00	7.71999
111.00	0.5600	5.14	7.85999
114.00	0.5600	5.27	7.98997
117.00	0.5600	5.40	8.11998
120.00	0.5600	5.54	8.25998
126.00	0.5600	5.80	8.51997
132.00	0.5600	6.05	8.76997
138.00	0.5600	6.30	9.01997
144.00	0.5600	6.55	9.26997
150.00	0.5900	0.82	9.53998
156.00	0.5900	1.09	9.80998
162.00	0.5900	1.35	10.06998
168.00	0.5900	1.60	10.31998
174.00	0.5900	1.85	10.56998
180.00	0.5900	2.10	10.81998
186.00	0.5900	2.36	11.07997
192.00	0.5900	2.61	11.32997
198.00	0.5900	2.86	11.57997
204.00	0.5900	3.10	11.81998
210.00	0.5900	3.34	12.05998
216.00	0.5900	3.57	12.28998
222.00	0.5900	3.80	12.51997
228.00	0.5900	4.02	12.73997
234.00	0.5900	4.24	12.95998
240.00	0.5900	4.45	13.16998
246.00	0.5900	4.65	13.36998
252.00	0.5900	4.85	13.56998
258.00	0.5900	5.04	13.75998
264.00	0.5900	5.24	13.95998
270.00	0.5900	5.48	14.19998
276.00	0.5900	5.69	14.40997
282.00	0.5900	5.90	14.61998
288.00	0.5900	6.13	14.84998
294.00	0.5900	6.36	15.07997
300.00	0.5900	6.58	15.29997

CALCULATIONS FOR GRAVIMETRIC FLOW EXPERIMENTS

RUN NO. = 195 SO2 = 2000. PPM TEMP = 200. DEG. F.
DATE = 9 10 71 NO = 150. PPM F(T) = 1500. CC/MIN
DRY WT.= 104.70 MG O2 = 3.5 % H2SO4 = 76.92 %
CORRECTION= -5.87 MG H2O = 6.0 %

TIME (MIN)	MASS DIAL	CHART INCHES	PICKUP (MG H2SO4)
1.00	0.5200	7.49	0.91997
2.00	0.5200	7.69	1.11996
3.00	0.5200	7.88	1.30997
4.00	0.5200	8.04	1.46997
5.00	0.5200	8.20	1.62997
6.00	0.5200	8.35	1.77997
7.00	0.5200	8.50	1.92998
8.00	0.5200	8.63	2.05997
9.00	0.5200	8.76	2.18997
10.00	0.5200	8.89	2.31998
11.00	0.5200	9.01	2.43997
12.00	0.5200	9.12	2.54997
13.00	0.5200	9.23	2.65997
14.00	0.5650	0.24	2.66997
15.00	0.5650	0.35	2.77997
16.00	0.5650	0.46	2.88997
17.00	0.5650	0.56	2.98997
18.00	0.5650	0.66	3.08997
19.00	0.5650	0.76	3.18997
20.00	0.5650	0.87	3.29997
21.00	0.5650	0.97	3.39996
22.00	0.5650	1.06	3.48997
23.00	0.5650	1.14	3.56998
24.00	0.5650	1.24	3.66997
25.00	0.5650	1.34	3.76997
26.00	0.5650	1.43	3.85997
27.00	0.5650	1.51	3.93997
28.00	0.5650	1.59	4.01997
29.00	0.5650	1.69	4.11996
30.00	0.5650	1.78	4.20998
33.00	0.5650	2.04	4.46997
36.00	0.5650	2.29	4.71997
39.00	0.5650	2.54	4.96997
42.00	0.5650	2.79	5.21997
45.00	0.5650	3.04	5.46997
48.00	0.5650	3.29	5.71997
51.00	0.5650	3.53	5.95998
54.00	0.5650	3.78	6.20998
57.00	0.5650	4.01	6.43997
60.00	0.5650	4.25	6.67998
63.00	0.5650	4.49	6.91997
66.00	0.5650	4.72	7.14996
69.00	0.5650	4.96	7.38997
72.00	0.5650	5.19	7.61996
75.00	0.5650	5.43	7.85997
78.00	0.5650	5.66	8.08997
81.00	0.5650	5.90	8.32997
84.00	0.5650	6.13	8.55997
87.00	0.5650	6.36	8.78996
90.00	0.5650	6.59	9.01997
93.00	0.5650	6.82	9.24997
96.00	0.5650	7.06	9.50996
99.00	0.5650	7.30	9.72997
102.00	0.5650	7.54	9.96997
105.00	0.5650	7.77	10.19997
108.00	0.5650	8.00	10.42998
111.00	0.5650	8.23	10.65997
114.00	0.5650	8.46	10.88997
117.00	0.5650	8.69	11.11996
120.00	0.5650	8.91	11.33997
126.00	0.5650	9.36	11.78996
132.00	0.6100	0.81	12.23997
138.00	0.6100	1.27	12.69997
144.00	0.6100	1.73	13.15997
150.00	0.6100	2.18	13.60997
156.00	0.6100	2.62	14.04997
162.00	0.6100	3.06	14.48997
168.00	0.6100	3.48	14.90997
174.00	0.6250	0.90	15.32999
180.00	0.6250	1.33	15.75998
186.00	0.6250	1.76	16.18999
192.00	0.6250	2.19	16.61998
198.00	0.6250	2.60	17.02998
204.00	0.6250	3.01	17.43999
210.00	0.6250	3.44	17.86998
216.00	0.6250	3.86	18.28998
222.00	0.6250	4.29	18.71999
228.00	0.6250	4.70	19.12999
234.00	0.6250	5.11	19.53998
240.00	0.6250	5.51	19.93999
246.00	0.6250	5.91	20.33998
252.00	0.6250	6.30	20.72998
258.00	0.6250	6.69	21.11998
264.00	0.6250	7.07	21.49998
270.00	0.6250	7.44	21.86998
276.00	0.6250	7.82	22.24998
282.00	0.6250	8.18	22.60999
288.00	0.6250	8.54	22.96999
294.00	0.6250	8.89	23.31999
300.00	0.6250	9.23	23.65999

CALCULATIONS FOR GRAVIMETRIC FLOW EXPERIMENTS

RUN NO. = 196 SO2 = 2000. PPM TEMP = 200. DEG. F.
DATE = 9 14 71 NO = 150. PPM F(T) = 1500. CC/MIN
DRY WT.= 100.42 MG O2 = 3.5 % H2SO4 = 75.78 %
CORRECTION= -6.22 MG H2O = 6.0 %

TIME (MIN)	MASS DIAL	CHART INCHES	PICKUP (MG H2SO4)
1.00	0.5000	7.44	0.79999
2.00	0.5000	7.54	0.89999
3.00	0.5000	7.60	0.95999
4.00	0.5000	7.65	1.00999
5.00	0.5000	7.71	1.06999
6.00	0.5000	7.77	1.12999
7.00	0.5000	7.82	1.17999
8.00	0.5000	7.88	1.23999
9.00	0.5000	7.93	1.28999
10.00	0.5000	7.98	1.34000
11.00	0.5000	8.04	1.39999
12.00	0.5000	8.10	1.45999
13.00	0.5000	8.16	1.51999
14.00	0.5000	8.21	1.56999
15.00	0.5000	8.26	1.62000
16.00	0.5000	8.31	1.67000
17.00	0.5000	8.36	1.71999
18.00	0.5000	8.40	1.75999
19.00	0.5000	8.44	1.79999
20.00	0.5000	8.49	1.84999
21.00	0.5000	8.54	1.89999
22.00	0.5000	8.59	1.95000
23.00	0.5000	8.63	1.98999
24.00	0.5000	8.68	2.03999
25.00	0.5000	8.72	2.07999
26.00	0.5000	8.76	2.12000
27.00	0.5000	8.80	2.15999
28.00	0.5000	8.85	2.20999
29.00	0.5000	8.89	2.25000
30.00	0.5000	8.93	2.28999
33.00	0.5400	0.93	2.28998
36.00	0.5400	1.03	2.38998
39.00	0.5400	1.14	2.49998
42.00	0.5400	1.26	2.61998
45.00	0.5400	1.37	2.72998
48.00	0.5400	1.48	2.83998
51.00	0.5400	1.59	2.94998
54.00	0.5400	1.69	3.04997
57.00	0.5400	1.79	3.14998
60.00	0.5400	1.89	3.24998
63.00	0.5400	1.99	3.34998
66.00	0.5400	2.09	3.44998
69.00	0.5400	2.19	3.54997
72.00	0.5400	2.29	3.64998
75.00	0.5400	2.39	3.74998
78.00	0.5400	2.49	3.84998
81.00	0.5400	2.59	3.94998
84.00	0.5400	2.69	4.04997
87.00	0.5400	2.78	4.13998
90.00	0.5400	2.88	4.23997
93.00	0.5400	2.97	4.32997
96.00	0.5400	3.06	4.41998
99.00	0.5400	3.15	4.50998
102.00	0.5400	3.24	4.59998
105.00	0.5400	3.32	4.67998
108.00	0.5400	3.40	4.75998
111.00	0.5400	3.49	4.84998
114.00	0.5400	3.57	4.92998
117.00	0.5400	3.66	5.01997
120.00	0.5400	3.74	5.09998
126.00	0.5400	3.90	5.25998
132.00	0.5400	4.08	5.43997
138.00	0.5400	4.26	5.61998
144.00	0.5400	4.44	5.79997
150.00	0.5400	4.61	5.96997
156.00	0.5400	4.80	6.15997
162.00	0.5400	4.98	6.33998
168.00	0.5400	5.16	6.51997
174.00	0.5400	5.34	6.69998
180.00	0.5400	5.51	6.86998
186.00	0.5400	5.70	7.05998
192.00	0.5400	5.87	7.22998
198.00	0.5400	6.05	7.40997
204.00	0.5400	6.22	7.57997
210.00	0.5400	6.40	7.75998
216.00	0.5400	6.58	7.93997
222.00	0.5400	6.75	8.10999
228.00	0.5400	6.93	8.28998
234.00	0.5400	7.10	8.45998
240.00	0.5400	7.27	8.62997
246.00	0.5400	7.43	8.78998
252.00	0.5400	7.60	8.95998
258.00	0.5400	7.77	9.12997
264.00	0.5400	7.94	9.29997
270.00	0.5400	8.10	9.45998
276.00	0.5400	8.27	9.62997
282.00	0.5400	8.44	9.79997
288.00	0.5400	8.60	9.95998
294.00	0.5400	8.77	10.12997
300.00	0.5400	8.93	10.28998

CALCULATIONS FOR GRAVIMETRIC FLOW EXPERIMENTS

RUN NO. = 197 SO2 = 2000. PPM TEMP = 200. DEG. F.
DATE = 9 15 71 NO = 150. PPM F(T) = 1500. CC/MIN
DRY WT.= 98.30 MG O2 = 3.5 % H2SO4 = 74.73 %
CORRECTION= -6.09 MG H2O = 6.0 %

TIME (MIN)	MASS DIAL	CHART INCHES	PICKUP (MG H2SO4)
1.00	0.4900	7.52	1.12997
2.00	0.4900	7.63	1.23997
3.00	0.4900	7.70	1.30998
4.00	0.4900	7.77	1.37997
5.00	0.4900	7.83	1.43997
6.00	0.4900	7.89	1.49998
7.00	0.4900	7.96	1.56998
8.00	0.4900	8.02	1.62997
9.00	0.4900	8.09	1.69998
10.00	0.4900	8.15	1.75998
11.00	0.4900	8.21	1.81998
12.00	0.4900	8.28	1.88998
13.00	0.4900	8.34	1.94998
14.00	0.4900	8.40	2.00998
15.00	0.4900	8.45	2.05998
16.00	0.4900	8.50	2.10999
17.00	0.4900	8.54	2.14998
18.00	0.4900	8.59	2.19998
19.00	0.4900	8.64	2.24998
20.00	0.4900	8.69	2.29997
21.00	0.4900	8.74	2.34998
22.00	0.4900	8.78	2.38998
23.00	0.4900	8.82	2.42998
24.00	0.4900	8.86	2.46997
25.00	0.4900	8.90	2.50998
26.00	0.4900	8.94	2.54997
27.00	0.4900	8.98	2.58998
28.00	0.4900	9.02	2.62997
29.00	0.4900	9.07	2.67998
30.00	0.4900	9.11	2.71997
33.00	0.5350	0.08	2.68997
36.00	0.5350	0.19	2.79997
39.00	0.5350	0.30	2.90997
42.00	0.5350	0.41	3.01997
45.00	0.5350	0.52	3.12997
48.00	0.5350	0.62	3.22998
51.00	0.5350	0.73	3.33998
54.00	0.5350	0.83	3.43997
57.00	0.5350	0.93	3.53998
60.00	0.5350	1.04	3.64998
63.00	0.5350	1.14	3.74998
66.00	0.5350	1.25	3.85999
69.00	0.5350	1.36	3.96997
72.00	0.5350	1.47	4.07997
75.00	0.5350	1.57	4.17998
78.00	0.5350	1.67	4.27998
81.00	0.5350	1.77	4.37997
84.00	0.5350	1.86	4.46997
87.00	0.5350	1.96	4.56998
90.00	0.5350	2.06	4.66998
93.00	0.5350	2.15	4.75998
96.00	0.5350	2.25	4.85999
99.00	0.5350	2.35	4.95998
102.00	0.5350	2.45	5.05998
105.00	0.5350	2.55	5.15997
108.00	0.5350	2.65	5.25998
111.00	0.5350	2.74	5.34998
114.00	0.5350	2.84	5.44998
117.00	0.5350	2.93	5.53998
120.00	0.5350	3.01	5.61998
126.00	0.5350	3.20	5.80998
132.00	0.5350	3.39	5.99998
138.00	0.5350	3.57	6.17998
144.00	0.5350	3.75	6.35999
150.00	0.5350	3.93	6.53998
156.00	0.5350	4.10	6.70998
162.00	0.5350	4.30	6.90997
168.00	0.5350	4.48	7.08998
174.00	0.5350	4.65	7.25998
180.00	0.5350	4.82	7.42998
186.00	0.5350	5.00	7.60999
192.00	0.5350	5.18	7.78998
198.00	0.5350	5.35	7.95998
204.00	0.5350	5.52	8.12997
210.00	0.5350	5.70	8.30998
216.00	0.5350	5.88	8.48997
222.00	0.5350	6.06	8.66998
228.00	0.5350	6.24	8.84998
234.00	0.5350	6.42	9.02998
240.00	0.5350	6.60	9.20998
246.00	0.5350	6.80	9.40997
252.00	0.5350	6.98	9.58998
258.00	0.5350	7.17	9.77998
264.00	0.5350	7.35	9.95998
270.00	0.5350	7.53	10.13998
276.00	0.5350	7.70	10.30998
282.00	0.5350	7.89	10.49998
288.00	0.5350	8.07	10.67998
294.00	0.5350	8.23	10.83998
300.00	0.5350	8.39	10.99998

CALCULATIONS FOR GRAVIMETRIC FLOW EXPERIMENTS

RUN NO. = 198 SO2 = 2000. PPM TEMP = 200. DEG. F.
DATE = 9 16 71 NO = 150. PPM F(T) = 1500. CC/MIN
DRY WT.= 103.10 MG O2 = 3.5 % H2SO4 = 77.32 %
CORRECTION= -5.10 MG H2O = 6.0 %

TIME (MIN)	MASS DIAL	CHART INCHES	PICKUP (MG H2SO4)
1.00	0.5100	8.11	1.90997
2.00	0.5100	8.19	1.98997
3.00	0.5100	8.27	2.06998
4.00	0.5100	8.34	2.13998
5.00	0.5100	8.42	2.21999
6.00	0.5100	8.50	2.29999
7.00	0.5100	8.58	2.37997
8.00	0.5100	8.67	2.46999
9.00	0.5100	8.74	2.53998
10.00	0.5100	8.81	2.60999
11.00	0.5100	8.89	2.68999
12.00	0.5100	8.98	2.77998
13.00	0.5100	9.06	2.85999
14.00	0.5550	0.07	2.86998
15.00	0.5550	0.13	2.92998
16.00	0.5550	0.19	2.98997
17.00	0.5550	0.27	3.06998
18.00	0.5550	0.34	3.13998
19.00	0.5550	0.41	3.20998
20.00	0.5550	0.48	3.27998
21.00	0.5550	0.55	3.34998
22.00	0.5550	0.62	3.41998
23.00	0.5550	0.69	3.48997
24.00	0.5550	0.76	3.55998
25.00	0.5550	0.82	3.61998
26.00	0.5550	0.89	3.68999
27.00	0.5550	0.97	3.76997
28.00	0.5550	1.03	3.82999
29.00	0.5550	1.10	3.89998
30.00	0.5550	1.08	3.87997
33.00	0.5550	1.37	4.16998
36.00	0.5550	1.57	4.36998
39.00	0.5550	1.76	4.55998
42.00	0.5550	1.95	4.74998
45.00	0.5550	2.14	4.93999
48.00	0.5550	2.32	5.11998
51.00	0.5550	2.51	5.30998
54.00	0.5550	2.70	5.49998
57.00	0.5550	2.89	5.68999
60.00	0.5550	3.08	5.87997
63.00	0.5550	3.27	6.06998
66.00	0.5550	3.46	6.25998
69.00	0.5550	3.64	6.43999
72.00	0.5550	3.82	6.61998
75.00	0.5550	4.01	6.80998
78.00	0.5550	4.20	6.99998
81.00	0.5550	4.40	7.19998
84.00	0.5550	4.59	7.38998
87.00	0.5550	4.79	7.58998
90.00	0.5550	4.99	7.78998
93.00	0.5550	5.18	7.97998
96.00	0.5550	5.38	6.17998
99.00	0.5550	5.58	8.37997
102.00	0.5550	5.77	8.56998
105.00	0.5550	5.97	8.76997
108.00	0.5550	6.18	8.97998
111.00	0.5550	6.39	9.18999
114.00	0.5550	6.69	9.48997
117.00	0.5550	6.80	9.59998
120.00	0.5550	7.01	9.80998
126.00	0.5550	7.47	10.21999
132.00	0.5550	7.84	10.63998
138.00	0.5550	8.25	11.04999
144.00	0.5550	8.67	11.46999
150.00	0.5550	9.06	11.87997
156.00	0.5550	9.49	12.28998
162.00	0.6000	0.89	12.68999
168.00	0.6000	1.29	13.08998
174.00	0.6000	1.68	13.47998
180.00	0.6000	2.08	13.87997
186.00	0.6000	2.48	14.27998
192.00	0.6000	2.89	14.68999
198.00	0.6000	3.30	15.09998
204.00	0.6000	3.71	15.50998
210.00	0.6000	4.11	15.90997
216.00	0.6000	4.51	16.30998
222.00	0.6000	4.95	16.74998
228.00	0.6000	5.36	17.15997
234.00	0.6000	5.74	17.53998
240.00	0.6000	6.13	17.92998
246.00	0.6000	6.52	18.31998
252.00	0.6000	6.91	18.70998
258.00	0.6000	7.29	19.08998
264.00	0.6000	7.69	19.48997
270.00	0.6000	8.07	19.86998
276.00	0.6000	8.45	20.24998
282.00	0.6000	8.83	20.62997
288.00	0.6400	0.94	20.73997
294.00	0.6400	1.20	20.99998
300.00	0.6400	1.46	21.25998

APPENDIX A-17-3

SO_2 SORPTION RATES FOR DETERMINATION OF THE SO_2 ACTIVITY OF POST-TREATED $(NH_4)_2S$ EXTRACTED CARBON SAMPLES USING DIFFERENTIAL RATE APPARATUS

CALCULATIONS FOR GRAVIMETRIC FLOW EXPERIMENTS

C-70-77 (VIRGIN)

RUN NO. =	180	SO2 =	2000. PPM	TEMP =	200. DEG. F.
DATE =	9 9 71	NO =	150. PPM	F(T) =	1500. CC/MIN
DRY WT.=	95.10 MG	O2 =	3.5 %	H2SO4 =	75.14 %
CORRECTION=	-6.18 MG.	H2O =	6.0 %		

MEAN LOAD GMS SO2/100 GMS C	DIFFERENTIAL RATE MGM SO2/GM C-MIN	MEAN LOAD GMS ACID/100 GMS C	DIFFERENTIAL RATE MGM ACID/GM C-MIN
0.87202	0.72239	1.33528	1.10616
0.93910	0.61917	1.43799	0.94810
0.99843	0.56760	1.52885	0.86913
1.05519	0.56760	1.61577	0.86913
1.11195	0.56760	1.70268	0.86913
1.16871	0.56760	1.78959	0.86913
1.22289	0.51602	1.87256	0.79016
1.27449	0.51595	1.95157	0.79004
1.32867	0.56760	2.03452	0.86913
1.38543	0.56760	2.12144	0.86913
1.44477	0.61925	2.21231	0.94822
1.49637	0.41273	2.29132	0.63199
1.54023	0.46445	2.35847	0.71120
1.59183	0.56760	2.43749	0.86913
1.64601	0.51595	2.52045	0.79004
1.69761	0.51602	2.59946	0.79016
1.74663	0.46438	2.67452	0.71107
1.79565	0.51602	2.74959	0.79016
1.84725	0.51595	2.82860	0.79004
1.90142	0.56760	2.91155	0.86913
1.96076	0.61925	3.00242	0.94822
2.02011	0.56760	3.07329	0.86913
2.07686	0.56752	3.18020	0.86901
2.13362	0.56760	3.26710	0.86913
2.19038	0.56760	3.35402	0.86913
2.24714	0.56760	3.44093	0.86913
2.30132	0.51602	3.52389	0.79016
2.35550	0.56760	3.60686	0.86913
2.40968	0.51602	3.68982	0.79016
2.51804	0.55038	3.85575	0.84277
2.68831	0.58479	4.11648	0.89545
2.85859	0.55041	4.37722	0.84281
3.02371	0.55038	4.63006	0.84277
3.19141	0.56760	4.88684	0.86913
3.36168	0.56760	5.14758	0.86913
3.52939	0.55041	5.40437	0.84281
3.69450	0.55038	5.65721	0.84277
3.85704	0.53319	5.90609	0.81645
4.01958	0.55041	6.15498	0.84281
4.18728	0.56760	6.41177	0.86913
4.35756	0.56760	6.67251	0.86913
4.52525	0.55038	6.92930	0.84277
4.68779	0.53319	7.17818	0.81645
4.85549	0.58479	7.43496	0.89545
5.02834	0.56760	7.69965	0.86913
5.19604	0.55041	7.95644	0.84281
5.36116	0.55038	8.20928	0.84277
5.52886	0.56760	8.46606	0.86913
5.69398	0.53319	8.71890	0.81645
5.85651	0.55041	8.96778	0.84281
6.01905	0.53319	9.21667	0.81645
6.16095	0.41280	9.43396	0.63211
6.30543	0.55038	9.65519	0.84277
6.46797	0.53319	9.90407	0.81645
6.62534	0.51600	10.14506	0.79012
6.78014	0.51600	10.38209	0.79012
6.93494	0.51600	10.61913	0.79012
7.08974	0.51600	10.85617	0.79012
7.24454	0.51597	11.09320	0.79008
7.47157	0.49860	11.44085	0.76378
7.76827	0.49020	11.89517	0.75062
8.06239	0.49019	12.34553	0.75060
8.35908	0.49860	12.79985	0.76378
8.65062	0.47300	13.24626	0.72428
8.93700	0.48159	13.68478	0.73744
9.21821	0.45579	14.11539	0.69793
9.49427	0.46440	14.53810	0.71112
9.77291	0.46439	14.96477	0.71109
10.04381	0.43860	15.37958	0.67161
10.30439	0.42999	15.77859	0.65843
10.54948	0.38699	16.15388	0.59258
10.78426	0.39559	16.51338	0.60574
11.01645	0.37840	16.86893	0.57942
11.24349	0.37840	17.21658	0.57942
11.46795	0.36979	17.56079	0.56624
11.68982	0.36980	17.90004	0.56626
11.90654	0.35260	18.23189	0.53992
12.11810	0.35259	18.55583	0.53990
12.32965	0.35260	18.87978	0.53992
12.53605	0.33540	19.19582	0.51357
12.73729	0.33540	19.50397	0.51357
12.93595	0.32680	19.80817	0.50041
13.13203	0.32680	20.10841	0.50041
13.32553	0.31819	20.40471	0.48723
13.51644	0.31819	20.69705	0.48723
13.69362	0.29241	20.97754	0.44775
13.88280	0.31819	21.25803	0.48723
14.0[illegible]	0.28300	21.53456	0.43357
14.2[illegible]	0.29239	21.79926	0.44773

CALCULATIONS FOR GRAVIMETRIC FLOW EXPERIMENTS

KAT-7-6C-1

RUN NO. =	189	SO2 =	2000. PPM	TEMP =	200. DEG. F.
DATE =	8 31 71	NO =	150. PPM	FLO	1500. CC/MIN
DRY WT.=	98.86 MG	O2 =	3.5 %	H2SO4 =	75.55 %
CORRECTION=	-6.22 MG	H2O =	6.0 %		

MEAN LOAD GMS SO2/100 GMS C	DIFFERENTIAL RATE MGM SO2/GM C-MIN	MEAN LOAD GMS ACID/100 GMS C	DIFFERENTIAL RATE MGM ACID/GM C-MIN
0.33687	1.54713	0.51583	2.36904
0.48160	1.34753	0.73746	2.06340
0.59869	0.99814	0.91705	1.52840
0.69371	0.89838	1.06225	1.37564
0.77856	0.79847	1.19216	1.22265
0.85341	0.69870	1.30679	1.06989
0.93077	0.84850	1.42525	1.29926
1.01811	0.89830	1.55899	1.37552
1.10296	0.79854	1.68890	1.22277
1.18281	0.79854	1.81118	1.22277
1.26266	0.79847	1.93345	1.22265
1.34251	0.79854	2.05572	1.22277
1.41987	0.74866	2.17418	1.14639
1.49973	0.84842	2.29645	1.29915
1.57958	0.74858	2.41873	1.14627
1.65443	0.74858	2.53335	1.14627
1.72680	0.69870	2.64416	1.06989
1.80166	0.79854	2.75879	1.22277
1.87403	0.64882	2.86961	0.99351
1.93641	0.59887	2.96513	0.91702
2.00129	0.69870	3.06448	1.06989
2.06617	0.59894	3.16383	0.91713
2.12607	0.59887	3.25554	0.91702
2.18096	0.49911	3.33960	0.76426
2.23087	0.49903	3.41602	0.76414
2.28078	0.49911	3.49244	0.76426
2.33068	0.49903	3.56886	0.76414
2.38059	0.49911	3.64528	0.76426
2.42801	0.44915	3.71786	0.68776
2.53780	0.58227	3.88601	0.89160
2.70998	0.56561	4.14966	0.86610
2.87468	0.53236	4.40186	0.81516
3.03189	0.51571	4.64258	0.78968
3.18410	0.49906	4.87566	0.76416
3.33632	0.51573	5.10875	0.78972
3.48605	0.48243	5.33801	0.73872
3.63328	0.49908	5.56345	0.76422
3.78300	0.49908	5.79272	0.76422
3.93022	0.48243	6.01816	0.73872
4.07496	0.48246	6.23978	0.73876
4.21969	0.48243	6.46140	0.73872
4.36442	0.48243	6.68302	0.73872
4.50666	0.46583	6.90082	0.71330
4.64391	0.44915	7.11098	0.68776
4.78365	0.48246	7.32496	0.73876
4.92589	0.46580	7.54276	0.71326
5.04816	0.34934	7.72999	0.53493
5.17293	0.48246	7.92104	0.73876
5.31517	0.46580	8.13085	0.71326
5.45740	0.48243	8.35665	0.73872
5.59714	0.44918	8.57063	0.68780
5.73439	0.46580	8.78078	0.71326
5.87413	0.46580	8.99476	0.71326
6.01138	0.44918	9.20492	0.68780
6.14862	0.46580	9.41508	0.71326
6.28587	0.44918	9.62524	0.68780
6.42312	0.46580	9.83540	0.71326
6.55787	0.43252	10.04173	0.66230
6.68763	0.43252	10.24043	0.66230
6.87229	0.39927	10.52319	0.61138
7.12682	0.44916	10.91294	0.68778
7.39632	0.44918	11.32561	0.68780
7.66083	0.43252	11.73064	0.66230
7.91785	0.42422	12.12421	0.64959
8.17238	0.42421	12.51396	0.64957
8.42691	0.42421	12.90370	0.64957
8.68144	0.42422	13.29345	0.64959
8.92849	0.39926	13.67174	0.61136
9.16804	0.39926	14.03856	0.61136
9.40760	0.39927	14.40539	0.61138
9.64965	0.40757	14.77604	0.62409
9.89669	0.41590	15.15431	0.63684
10.14124	0.39927	15.52878	0.61138
10.38329	0.40757	15.89942	0.62409
10.62534	0.39926	16.27005	0.61136
10.86240	0.39094	16.63304	0.59863
11.09448	0.38263	16.98842	0.58590
11.32406	0.38263	17.33995	0.58590
11.53866	0.33271	17.66856	0.50947
11.74577	0.35767	17.98570	0.54768
11.96038	0.35768	18.31432	0.54770
12.17249	0.34935	18.64911	0.53495
12.37960	0.34104	18.95625	0.52222
12.59173	0.33271	19.26576	0.50947
12.78136	0.33273	19.57146	0.50949
12.97600	0.31607	19.86949	0.48399
13.16565	0.31609	20.15990	0.48401
13.35280	0.30776	20.44647	0.47126
13.53996	0.31607	20.73305	0.48401

CALCULATIONS FOR GRAVIMETRIC FLOW EXPERIMENTS

RXT-7-6C-4

RUN NO. = 191 SO2 = 2000. PPM TEMP = 200. DEG. F.
DATE = 9 2 71 NO = 150. PPM FLO = 1500. CC/MIN
DRY WT.= 100.56 MG O2 = 3.5 % H2SO4 = 76.20 %
CORRECTION= -6.43 MG H2O = 6.0 %

MEAN LOAD GMS SO2/100 GMS C	DIFFERENTIAL RATE MGM SO2/GM C-MIN	MEAN LOAD GMS ACID/100 GMS C	DIFFERENTIAL RATE MGM ACID/GM C-MIN
0.35629	1.18762	0.54557	1.81854
0.47011	1.08870	0.71985	1.66707
0.57156	0.94025	0.87520	1.43975
0.66063	0.84126	1.01159	1.28817
0.74476	0.84126	1.14041	1.28817
0.82394	0.74234	1.26165	1.13670
0.89817	0.74226	1.37532	1.13659
0.96745	0.64334	1.48140	0.98512
1.03425	0.69280	1.58370	1.06085
1.10106	0.64336	1.68600	0.98512
1.14312	0.19784	1.75040	0.30294
1.18518	0.64334	1.81480	0.98512
1.24704	0.59381	1.90952	0.90927
1.30147	0.49489	1.99288	0.75780
1.35343	0.54435	2.07244	0.83354
1.40539	0.49482	2.15201	0.75769
1.45488	0.49489	2.22778	0.75780
1.50189	0.44536	2.29977	0.68195
1.54643	0.44536	2.36796	0.68195
1.59097	0.44543	2.43616	0.68207
1.63798	0.49482	2.50815	0.75769
1.68499	0.44536	2.58013	0.68195
1.72705	0.39590	2.64454	0.60622
1.76911	0.44536	2.70895	0.68195
1.81365	0.44543	2.77715	0.68207
1.85572	0.39590	2.84157	0.60622
1.89283	0.34636	2.89840	0.53037
1.92747	0.34644	2.95144	0.53048
1.96459	0.39590	3.00828	0.60622
2.05119	0.44536	3.14088	0.68195
2.17490	0.37941	3.33032	0.58097
2.29119	0.39587	3.50839	0.60618
2.40748	0.37939	3.68646	0.58094
2.52378	0.39590	3.86453	0.60622
2.64007	0.37939	4.04260	0.58094
2.75141	0.36290	4.21310	0.55569
2.85781	0.34641	4.37602	0.53045
2.96421	0.36290	4.53894	0.55569
3.07060	0.34639	4.70185	0.53041
3.39720	1.83099	5.20197	2.80370
3.38236	0.34641	5.17924	0.53045
3.48628	0.34641	5.33837	0.53045
3.58773	0.32990	5.49371	0.50516
3.68917	0.34639	5.64905	0.53041
3.79062	0.32993	5.80439	0.50520
3.88960	0.32990	5.95594	0.50516
3.98857	0.32990	6.10749	0.50516
4.08754	0.32990	6.25904	0.50516
4.18404	0.31342	6.40681	0.47992
4.27806	0.31342	6.55078	0.47992
4.36961	0.29690	6.69096	0.45464
4.46116	0.31342	6.83115	0.47992
4.55518	0.31342	6.97512	0.47992
4.64921	0.31342	7.11910	0.47992
4.74076	0.29690	7.25928	0.45464
4.82983	0.29693	7.39567	0.45467
4.91890	0.29690	7.53207	0.45464
5.00798	0.29693	7.66847	0.45467
5.14159	0.29692	7.87307	0.45465
5.32222	0.30516	8.14965	0.46728
5.50531	0.30516	8.43001	0.46728
5.69089	0.31342	8.71417	0.47992
5.87399	0.29692	8.99454	0.45465
6.05214	0.29692	9.26733	0.45465
6.22781	0.28867	9.53634	0.44203
6.39854	0.28042	9.79777	0.42939
6.56432	0.27218	10.05162	0.41677
6.73257	0.28866	10.30925	0.44201
6.90082	0.27218	10.56686	0.41677
7.06413	0.27218	10.81694	0.41677
7.22743	0.27218	11.06701	0.41677
7.38579	0.25568	11.30949	0.39150
7.54167	0.26393	11.54818	0.40415
7.70250	0.27216	11.79445	0.41675
7.86580	0.27218	12.04451	0.41677
8.02663	0.26393	12.29078	0.40415
8.18499	0.26392	12.53326	0.40413
8.34334	0.26393	12.77574	0.40415
8.49922	0.25568	13.01444	0.39150
8.65263	0.25568	13.24934	0.39150
8.80604	0.25568	13.48425	0.39150
8.95697	0.24743	13.71536	0.37888
9.10543	0.24743	13.94267	0.37888
9.24894	0.23095	14.16245	0.35364
9.39246	0.24743	14.38220	0.37888
9.54092	0.24743	14.60953	0.37888
9.66680	0.23918	14.83307	0.36624
9.82793	0.23073	15.24902	0.35362

CALCULATIONS FOR GRAVIMETRIC FLOW EXPERIMENTS

HAT-7-AC-5

RUN NO. =	192	SO2 =	2000. PPM	TEMP =	200. DEG. F.
DATE =	9 3 71	NO =	150. PPM	FLTI =	1500. CC/MIN
DRY WT.=	100.90 MG	O2 =	3.5 %	H2SO4 =	76.62 %
CORRECTION=	-6.13 MG	H2O =	6.0 %		

MEAN LOAD GMS SO2/100 GMS C	DIFFERENTIAL RATE MGM SO2/GM C-MIN	MEAN LOAD GMS ACID/100 GMS C	DIFFERENTIAL RATE MGM ACID/GM C-MIN
0.73395	2.18202	1.12386	3.34123
0.94471	2.03326	1.44659	3.11343
1.14060	1.88441	1.74654	2.88551
1.28688	1.04137	1.97054	1.59460
1.42574	1.73565	2.18316	2.65771
1.58939	1.53739	2.43375	2.35413
1.74064	1.48768	2.66536	2.27800
1.87950	1.28942	2.87798	1.97442
2.00843	1.28934	3.07541	1.97431
2.13489	1.23978	3.26905	1.89841
2.25887	1.23978	3.45889	1.89841
2.37789	1.14058	3.64114	1.74651
2.48947	1.09101	3.81199	1.67061
2.59609	1.04145	3.97526	1.59472
2.70519	1.14058	4.14232	1.74651
2.81181	0.99181	4.30558	1.51871
2.91099	0.99188	4.45746	1.51882
3.01018	0.99181	4.60934	1.51871
3.10936	0.99181	4.76121	1.51871
3.20606	0.94225	4.90928	1.44281
3.30028	0.94225	5.05356	1.44281
3.38707	0.79340	5.18645	1.21490
3.46889	0.84304	5.31174	1.29091
3.55568	0.89268	5.44463	1.36692
3.63998	0.79348	5.57373	1.21501
3.71933	0.79340	5.69522	1.21490
3.80363	0.89268	5.82431	1.36692
3.89042	0.84304	5.95720	1.29091
3.97472	0.84304	6.08629	1.29091
4.14829	0.87611	6.35207	1.34154
4.39873	0.79348	6.73556	1.21501
4.63677	0.79345	7.10005	1.21497
4.87480	0.79345	7.46454	1.21497
5.11532	0.81000	7.83284	1.24031
5.34096	0.69427	8.17835	1.06311
5.56660	0.81000	8.52386	1.24031
5.80960	0.80997	8.89595	1.24027
6.05011	0.79345	9.26424	1.21497
6.28071	0.75389	9.61734	1.13908
6.50884	0.77693	9.96660	1.18966
6.73448	0.72732	10.31216	1.11370
6.95763	0.76041	10.65388	1.16438
7.23039	1.05794	11.07153	1.61998
7.45355	0.42978	11.41324	0.65810
7.62711	0.72734	11.67902	1.11374
7.84780	0.74386	12.01694	1.13904
8.06600	0.71082	12.35106	1.08844
8.28172	0.72734	12.68139	1.11374
8.48009	0.59510	12.98514	0.91124
8.68341	0.76038	13.29647	1.16434
8.90161	0.69427	13.63059	1.06311
9.10741	0.67775	13.94572	1.03781
9.30826	0.66123	14.25327	1.01251
9.50663	0.66121	14.55702	1.01247
9.70499	0.66121	14.86076	1.01247
9.90335	0.66123	15.16451	1.01251
10.09924	0.64468	15.46446	0.98717
10.29265	0.64468	15.76061	0.98717
10.48605	0.64468	16.05676	0.98717
10.77120	0.62815	16.49339	0.96186
11.14810	0.62816	17.07051	0.96187
11.51259	0.58682	17.62865	0.89857
11.86221	0.57856	18.16400	0.88592
12.20686	0.57030	18.69176	0.87327
12.54657	0.56204	19.21191	0.86062
12.88131	0.55377	19.72450	0.84796
13.20861	0.53723	20.22568	0.82264
13.48880	0.39673	20.65471	0.60749
13.76403	0.52071	21.07616	0.79734
14.06653	0.48764	21.53937	0.74670
14.35416	0.47112	21.97980	0.72141
14.63436	0.46285	22.40866	0.70874
14.91455	0.47112	22.83789	0.72141
15.18482	0.42978	23.25175	0.65810
15.44517	0.43805	23.65041	0.67077
15.70405	0.42153	24.04529	0.64547
15.95100	0.40499	24.42496	0.62014
16.19667	0.41326	24.80684	0.63280
16.43638	0.38847	25.16911	0.59484
16.67255	0.39674	25.52983	0.60751
16.88819	0.35544	25.87545	0.54420
17.11867	0.38029	26.21326	0.58219
17.33455	0.35544	26.55118	0.54420
17.54288	0.32234	26.86252	0.49359
17.73875	0.33062	27.16246	0.50625
17.90985	0.23969	27.42445	0.36702
18.06056	0.28929	27.66745	0.44297
18.20211	0.28929	27.93323	0.44295
18.41968	0.29929	28.17961	0.44297

CALCULATIONS FOR GRAVIMETRIC FLOW EXPERIMENTS

RAT-7-6L-6

RUN NO. =	193	SO2 =	2000. PPM	TEMP =	200. DEG. F.
DATE =	9 7 71	NO =	150. PPM	F(T) =	1500. CC/MIN
DRY WT.=	102.82 MG	O2 =	3.5 %	H2SO4 =	76.19 %
CORRECTION=	-6.18 MG	H2O =	6.0 %		

MEAN LOAD GMS SO2/100 GMS C	DIFFERENTIAL RATE MGM SO2/GM C-MIN	MEAN LOAD GMS ACID/100 GMS C	DIFFERENTIAL RATE MGM ACID/GM C-MIN
0.36777	1.25824	0.56315	1.92668
0.49601	1.30653	0.75951	2.00063
0.61941	1.16144	0.94847	1.77845
0.73797	1.20980	1.13001	1.85251
0.85895	1.20980	1.31526	1.85251
0.97509	1.11300	1.49310	1.70428
1.06461	0.67749	1.63019	1.03740
1.15172	1.06463	1.76357	1.63021
1.25576	1.01626	1.92289	1.55616
1.35739	1.01619	2.07850	1.55604
1.45659	0.96783	2.23040	1.48198
1.55095	0.91946	2.37489	1.40792
1.64290	0.91946	2.51569	1.40792
1.73242	0.87110	2.65277	1.33386
1.81469	0.77422	2.77874	1.18552
1.89454	0.82273	2.90101	1.25980
1.97681	0.82266	3.02699	1.25969
2.05907	0.82266	3.15296	1.25969
2.13650	0.72585	3.27151	1.11146
2.20909	0.72593	3.38266	1.11157
2.28409	0.77422	3.49752	1.18552
2.35668	0.67749	3.60866	1.03740
2.42685	0.72593	3.71611	1.11157
2.49460	0.62905	3.81985	0.96323
2.56235	0.72593	3.92359	1.11157
2.63252	0.67749	4.03104	1.03740
2.69543	0.58068	4.12737	0.88917
2.75833	0.67749	4.22370	1.03740
2.82366	0.62912	4.32374	0.96334
2.95190	0.64522	4.52010	0.98799
3.14063	0.61297	4.80909	0.93862
3.32210	0.59683	5.08697	0.91389
3.49673	0.58071	5.35743	0.88921
3.67778	0.61297	5.63160	0.93862
3.86168	0.61297	5.91319	0.93862
4.03831	0.56456	6.18365	0.86448
4.21252	0.59685	6.45042	0.91393
4.39157	0.59683	6.72459	0.91389
4.56578	0.56456	6.99134	0.86448
4.73999	0.59685	7.25811	0.91393
4.91178	0.54844	7.52116	0.83979
5.08115	0.58071	7.78052	0.88921
5.25052	0.54844	8.03987	0.83979
5.41990	0.58071	8.29922	0.88921
5.62556	0.79041	8.61415	1.21032
5.82881	0.56456	8.92536	0.86448
6.00302	0.59685	9.19213	0.91393
6.17723	0.56456	9.45889	0.86448
6.34902	0.58071	9.72194	0.88921
6.52324	0.58071	9.98870	0.88921
6.69261	0.54846	10.24806	0.83983
6.86198	0.58068	10.50741	0.88917
7.03135	0.54846	10.76676	0.83983
7.19589	0.54844	11.01870	0.83979
7.35800	0.53232	11.26694	0.81511
7.51770	0.53232	11.51147	0.81511
7.67497	0.51617	11.75229	0.79038
7.82982	0.51619	11.98942	0.79042
7.98468	0.51617	12.22653	0.79038
8.21454	0.50812	12.57851	0.77806
8.51699	0.50005	13.04164	0.76570
8.79524	0.42746	13.46772	0.65455
9.06382	0.46779	13.87897	0.71631
9.34449	0.46779	14.30876	0.71631
9.62033	0.45166	14.73113	0.69160
9.88890	0.44360	15.14238	0.67926
10.15506	0.44360	15.54994	0.67926
10.41880	0.43552	15.95376	0.66689
10.68253	0.44360	16.35762	0.67926
10.94627	0.43554	16.76147	0.66691
11.20275	0.41939	17.15421	0.64219
11.45439	0.41940	17.53952	0.64221
11.70361	0.41133	17.92114	0.62985
11.95282	0.41940	18.30275	0.64221
12.19721	0.39521	18.67697	0.60516
12.43433	0.39519	19.04005	0.60514
12.66903	0.38715	19.39944	0.59282
12.90131	0.38713	19.75513	0.59280
13.13359	0.38713	20.11081	0.59280
13.35619	0.35488	20.45166	0.54341
13.56912	0.35488	20.77771	0.54341
13.78205	0.35488	21.10374	0.54341
13.99013	0.33874	21.42218	0.51870
14.19580	0.34660	21.73730	0.53104
14.39663	0.32262	22.04483	0.49401
14.59745	0.34680	22.35234	0.53104
14.80070	0.33068	22.66356	0.50636
14.99669	0.32261	22.96367	0.49379
15.19783	0.31455	23.26636	0.48125

CALCULATIONS FOR GRAVIMETRIC FLOW EXPERIMENTS

RAT-7-6C-7

RUN NO. = 194 SO2 = 2000. PPM TEMP = 200. DEG. F.
DATE = 9 9 71 NO = 150. PPM F(T) = 1500. CC/MIN
DRY WT.= 103.30 MG O2 = 3.5 % H2SO4 = 75.69 %
CORRECTION= -5.98 MG H2O = 6.0 %

MEAN LOAD GMS SO2/100 GMS C	DIFFERENTIAL RATE MGM SO2/GM C-MIN	MEAN LOAD GMS ACID/100 GMS C	DIFFERENTIAL RATE MGM ACID/GM C-MIN
0.73929	0.43064	1.13204	0.65942
0.78236	0.43064	1.19798	0.65942
0.82781	0.47854	1.26759	0.73276
0.87567	0.47847	1.34086	0.73265
0.92352	0.47854	1.41413	0.73276
0.97376	0.52636	1.49107	0.80600
1.02400	0.47847	1.56800	0.73265
1.07424	0.52636	1.64493	0.80600
1.12210	0.43072	1.71821	0.65953
1.16038	0.33492	1.77683	0.51285
1.19627	0.38282	1.83178	0.58619
1.23455	0.38282	1.89040	0.58619
1.27522	0.43064	1.95268	0.65942
1.31828	0.43064	2.01862	0.65942
1.34939	0.19145	2.06625	0.29315
1.37810	0.38282	2.11022	0.58619
1.41876	0.43064	2.17250	0.65942
1.45945	0.38282	2.23476	0.58619
1.49773	0.38282	2.29340	0.58619
1.53601	0.38282	2.35202	0.58619
1.57429	0.38274	2.41063	0.58608
1.61257	0.38282	2.46925	0.58619
1.64846	0.33499	2.52420	0.51296
1.68195	0.33492	2.57549	0.51285
1.71306	0.28717	2.62312	0.43973
1.74416	0.33492	2.67075	0.51285
1.77287	0.23927	2.71471	0.36638
1.80398	0.38282	2.76234	0.58619
1.83747	0.28709	2.81363	0.43961
1.89250	0.27115	2.89789	0.41520
1.97624	0.28712	3.02612	0.43965
2.06237	0.28709	3.15801	0.43961
2.14611	0.27115	3.28623	0.41520
2.22507	0.25521	3.40713	0.39079
2.30402	0.27115	3.52803	0.41520
2.38298	0.25521	3.64893	0.39079
2.45954	0.25521	3.76617	0.39079
2.53849	0.27115	3.88707	0.41520
2.61505	0.23925	4.00430	0.36635
2.68444	0.22330	4.11054	0.34193
2.75143	0.22330	4.21312	0.34193
2.82081	0.23927	4.31937	0.36638
2.89020	0.22330	4.42562	0.34193
2.95719	0.22330	4.52820	0.34193
3.02418	0.22330	4.63078	0.34193
3.08878	0.20734	4.72969	0.31749
3.15337	0.22330	4.82860	0.34193
3.22037	0.22330	4.93118	0.34193
3.28497	0.20736	5.03010	0.31752
3.34717	0.20736	5.12536	0.31752
3.40938	0.20734	5.22061	0.31749
3.46919	0.19142	5.31220	0.29311
3.52901	0.20734	5.40379	0.31749
3.59600	0.23927	5.50637	0.36638
3.66299	0.20736	5.60896	0.31752
3.72759	0.22330	5.70788	0.34193
3.79219	0.20734	5.80679	0.31749
3.85439	0.20736	5.90204	0.31752
3.91899	0.22330	6.00096	0.34193
4.01469	0.20735	6.14750	0.31751
4.13671	0.19938	6.33434	0.30530
4.25634	0.19938	6.51752	0.30530
4.37597	0.19938	6.70070	0.30530
4.50038	0.21533	6.89171	0.32973
4.62958	0.21533	7.08905	0.32973
4.75639	0.20735	7.28322	0.31751
4.87841	0.19938	7.47006	0.30530
4.99804	0.19938	7.65324	0.30530
5.11766	0.19938	7.83642	0.30530
5.23968	0.20735	8.02326	0.31751
5.36170	0.19938	8.21011	0.30530
5.48133	0.19938	8.39329	0.30530
5.59857	0.19141	8.57280	0.29309
5.71341	0.19141	8.74866	0.29309
5.82586	0.18343	8.92085	0.28087
5.93591	0.18343	9.08937	0.28087
6.04358	0.17545	9.25423	0.26867
6.14885	0.17545	9.41543	0.26867
6.25173	0.16748	9.57297	0.25646
6.34983	0.15950	9.72318	0.24424
6.44553	0.15950	9.86972	0.24424
6.53884	0.15153	10.01260	0.23203
6.63215	0.15950	10.15548	0.24424
6.73742	0.19141	10.31668	0.29309
6.84509	0.16747	10.48154	0.25644
6.94558	0.16748	10.63541	0.25646
7.05065	0.18343	10.79661	0.28087
7.16090	0.18343	10.96513	0.28087
7.26457	0.17545	11.13000	0.26867

CALCULATIONS FOR GRAVIMETRIC FLOW EXPERIMENTS

PXT-7-6C-8

RUN NO. =	195	SO2 =	2000. PPM	TEMP =	200. DEG. F.
DATE =	9 10 71	NO =	150. PPM	F(T) =	1500. CC/MIN
DRY WT.=	104.70 MG	O2 =	3.5 %	H2SO4 =	76.92 %
CORRECTION=	-5.87 MG	H2O =	6.0 %		

MEAN LOAD GMS SO2/100 GMS C	DIFFERENTIAL RATE MGM SO2/GM C-MIN	MEAN LOAD GMS ACID/100 GMS C	DIFFERENTIAL RATE MGM ACID/GM C-MIN
0.48936	0.95955	0.74934	1.46932
0.58292	0.91160	0.89260	1.39589
0.66689	0.76767	1.02117	1.17550
0.74365	0.76767	1.13872	1.17550
0.81802	0.71965	1.25259	1.10196
0.88999	0.71972	1.36279	1.10207
0.95716	0.62367	1.46565	0.95499
1.01953	0.62374	1.56115	0.95511
1.08190	0.62374	1.65666	0.95511
1.14187	0.57572	1.74849	0.88157
1.19705	0.52777	1.83298	0.80814
1.24983	0.52777	1.91379	0.80814
1.27861	0.04795	1.95787	0.07343
1.30740	0.52777	2.00195	0.80814
1.36017	0.52777	2.08277	0.80814
1.41055	0.47981	2.15991	0.73472
1.45853	0.47974	2.23337	0.73460
1.50651	0.47981	2.30684	0.73472
1.55689	0.52777	2.38398	0.80814
1.60726	0.47974	2.46112	0.73460
1.65284	0.43186	2.53092	0.66129
1.69363	0.38384	2.59337	0.58775
1.73681	0.47974	2.65948	0.73460
1.78478	0.47981	2.73295	0.73472
1.83037	0.43179	2.80275	0.66118
1.87115	0.38384	2.86519	0.58775
1.90953	0.38384	2.92397	0.58775
1.95271	0.47974	2.99008	0.73460
1.99829	0.43186	3.05988	0.66129
2.06225	0.41580	3.18845	0.63670
2.20460	0.39982	3.37579	0.61223
2.32454	0.39982	3.55945	0.61223
2.44449	0.39982	3.74312	0.61223
2.56444	0.39982	3.92679	0.61223
2.68438	0.39982	4.11046	0.61223
2.80193	0.38384	4.29045	0.58775
2.91948	0.39982	4.47045	0.61223
3.03463	0.36783	4.64677	0.56324
3.14737	0.38384	4.81941	0.58775
3.26252	0.38381	4.99574	0.58771
3.37527	0.36783	5.16838	0.56324
3.48802	0.38384	5.34103	0.58775
3.60077	0.36783	5.51367	0.56324
3.71352	0.38384	5.68632	0.58775
3.82627	0.36783	5.85897	0.56324
3.93902	0.38384	6.03162	0.58775
4.05176	0.36783	6.20426	0.56324
4.16211	0.36783	6.37324	0.56324
4.27247	0.36785	6.54221	0.56327
4.38282	0.36783	6.71119	0.56324
4.50036	0.41580	6.89118	0.63670
4.61551	0.35184	7.06750	0.53876
4.72586	0.38384	7.23648	0.58775
4.83861	0.36783	7.40912	0.56324
4.94896	0.36785	7.57810	0.56327
5.05932	0.36783	7.74708	0.56324
5.16966	0.36783	7.91605	0.56324
5.28001	0.36783	8.08502	0.56324
5.38797	0.35184	8.25032	0.53876
5.54869	0.35984	8.49643	0.55100
5.76460	0.35985	8.82704	0.55102
5.98290	0.36783	9.16131	0.56324
6.20360	0.36784	9.49926	0.56326
6.42190	0.35984	9.83354	0.55100
6.63541	0.35184	10.16047	0.53876
6.84651	0.35184	10.48372	0.53876
7.05782	0.33585	10.79963	0.51427
7.25433	0.33586	11.10620	0.51429
7.45824	0.34384	11.42044	0.52650
7.66455	0.34385	11.73634	0.52652
7.87086	0.34384	12.05225	0.52650
8.07237	0.32786	12.36081	0.50203
8.26908	0.32786	12.66203	0.50203
8.47059	0.34384	12.97059	0.52650
8.67450	0.33585	13.28282	0.51427
8.87840	0.34385	13.59506	0.52652
9.07992	0.32786	13.90363	0.50203
9.27663	0.32784	14.20484	0.50201
9.47094	0.31986	14.50238	0.48979
9.66286	0.31985	14.79625	0.48977
9.85237	0.31186	15.08644	0.47753
10.03948	0.31186	15.37296	0.47753
10.22420	0.30387	15.65581	0.46530
10.40412	0.29586	15.93131	0.45304
10.58404	0.30387	16.20680	0.46530
10.76156	0.28787	16.47869	0.44080
10.93429	0.28787	16.74412	0.44080
11.1[illegible]	0.27988	17.00392	0.42857
11.27014	0.27188	17.25739	0.41631

CALCULATIONS FOR GRAVIMETRIC FLOW EXPERIMENTS

RXT-7-6C-9

RUN NO. = 196 SO2 = 2000. PPM TEMP = 200. DEG. F.
DATE = 9 14 71 NO = 150. PPM F(T) = 1500. CC/MIN
DRY WT.= 100.42 MG O2 = 3.5 % H2SO4 = 75.78 %
CORRECTION= -6.22 MG H2O = 6.0 %

MEAN LOAD GMS SO2/100 GMS C	DIFFERENTIAL RATE MGM SO2/GM C-MIN	MEAN LOAD GMS ACID/100 GMS C	DIFFERENTIAL RATE MGM ACID/GM C-MIN
0.41889	0.49285	0.64143	0.75468
0.45832	0.29568	0.70180	0.45276
0.48542	0.24642	0.74331	0.37734
0.51253	0.29568	0.78481	0.45276
0.54210	0.29568	0.83009	0.45276
0.56920	0.24642	0.87159	0.37734
0.59631	0.29568	0.91310	0.45276
0.62341	0.24642	0.95460	0.37734
0.64806	0.24642	0.99233	0.37734
0.67516	0.29568	1.03384	0.45276
0.70473	0.29568	1.07911	0.45276
0.73430	0.29568	1.12439	0.45276
0.76140	0.24642	1.16590	0.37734
0.78604	0.24642	1.20363	0.37734
0.81069	0.24642	1.24136	0.37734
0.83533	0.24635	1.27909	0.37722
0.85750	0.19717	1.31305	0.30192
0.87721	0.19709	1.34324	0.30180
0.89939	0.24642	1.37719	0.37734
0.92403	0.24642	1.41493	0.37734
0.94868	0.24642	1.45266	0.37734
0.97085	0.19709	1.48662	0.30180
0.99303	0.24642	1.52057	0.37734
1.01520	0.19709	1.55453	0.30180
1.03492	0.19717	1.58472	0.30192
1.05463	0.19709	1.61490	0.30180
1.07681	0.24642	1.64886	0.37734
1.09892	0.19717	1.68282	0.30192
1.11870	0.19709	1.71301	0.30180
1.15319	0.16428	1.76582	0.25156
1.20494	0.18070	1.84506	0.27670
1.26161	0.19712	1.93184	0.30184
1.31828	0.18070	2.01862	0.27670
1.37249	0.18070	2.10163	0.27670
1.42670	0.18070	2.18464	0.27670
1.47845	0.16426	2.26387	0.25152
1.52773	0.16428	2.33933	0.25156
1.57701	0.16428	2.41480	0.25156
1.62630	0.16426	2.49026	0.25152
1.67558	0.16428	2.56573	0.25156
1.72486	0.16426	2.64119	0.25152
1.77414	0.16428	2.71665	0.25156
1.82342	0.16428	2.79212	0.25156
1.87271	0.16426	2.86758	0.25152
1.92199	0.16428	2.94304	0.25156
1.97127	0.16426	3.01850	0.25152
2.01809	0.14786	3.09019	0.22642
2.06490	0.16426	3.16188	0.25152
2.11172	0.14784	3.23357	0.22638
2.15607	0.14786	3.30149	0.22642
2.20043	0.14784	3.36941	0.22638
2.24478	0.14784	3.43732	0.22638
2.28667	0.13142	3.50147	0.20124
2.32610	0.13142	3.56184	0.20124
2.36799	0.14784	3.62598	0.22638
2.40988	0.13142	3.69012	0.20124
2.45177	0.14784	3.75427	0.22638
2.49366	0.13142	3.81841	0.20124
2.55280	0.13142	3.90897	0.20124
2.63657	0.14784	4.03725	0.22638
2.72528	0.14785	4.17309	0.22640
2.81399	0.14784	4.30892	0.22638
2.90023	0.13963	4.44098	0.21381
2.98894	0.15606	4.57681	0.23897
3.08011	0.14785	4.71642	0.22640
3.16882	0.14784	4.85225	0.72638
3.25753	0.14785	4.98809	0.22640
3.34377	0.13963	5.12015	0.21381
3.43248	0.15606	5.25598	0.23897
3.52119	0.13963	5.39182	0.21381
3.60743	0.14784	5.52387	0.22638
3.69367	0.13963	5.65593	0.21381
3.77991	0.14785	5.78799	0.22640
3.86862	0.14784	5.92383	0.22638
3.95487	0.13964	6.05589	0.21383
4.04111	0.14784	6.18795	0.22638
4.12735	0.13963	6.32001	0.21381
4.21113	0.13963	6.44830	0.21381
4.29245	0.13142	6.57281	0.20124
4.37376	0.13963	6.69732	0.21381
4.45754	0.13963	6.82561	0.21381
4.54132	0.13963	6.95389	0.21381
4.62263	0.13142	7.07841	0.20124
4.70395	0.13963	7.20292	0.21381
4.78773	0.13963	7.33121	0.21381
4.86904	0.13142	7.45572	0.20124
4.95036	0.13963	7.58024	0.21381
5.03168	0.13142	7.70476	0.20124

CALCULATIONS FOR GRAVIMETRIC FLOW EXPERIMENTS

RXT-7-6C

RUN NO. = 197 SO2 = 2000. PPM TEMP = 200. DEG. F.
DATE = 9 15 71 NO = 150. PPM F(T) = 1500. CC/MIN
DRY WT.= 98.30 MG O2 = 3.5 % H2SO4 = 74.73 %
CORRECTION= -6.09 MG H2O = 6.0 %

MEAN LOAD GMS SO2/100 GMS C	DIFFERENTIAL RATE MGM SO2/GM C-MIN	MEAN LOAD GMS ACID/100 GMS C	DIFFERENTIAL RATE MGM ACID/GM C-MIN
0.58831	0.54612	0.90085	0.83625
0.63299	0.34757	0.96927	0.53221
0.66774	0.34749	1.02248	0.53210
0.70001	0.29787	1.07189	0.45612
0.72980	0.29795	1.11751	0.45623
0.76208	0.34749	1.16693	0.53210
0.79434	0.29787	1.21634	0.45612
0.82662	0.34757	1.26575	0.53221
0.85889	0.29787	1.31517	0.45612
0.88867	0.29787	1.36078	0.45612
0.92095	0.34757	1.41020	0.53221
0.95322	0.29787	1.45962	0.45612
0.98301	0.29787	1.50523	0.45612
1.01031	0.24825	1.54704	0.38013
1.03514	0.24825	1.58505	0.38013
1.05748	0.19856	1.61926	0.30404
1.07982	0.24825	1.65347	0.38013
1.10464	0.24825	1.69148	0.38013
1.12946	0.24818	1.72949	0.38002
1.15429	0.24825	1.76750	0.38013
1.17663	0.19863	1.80171	0.30415
1.19649	0.19856	1.83212	0.30404
1.21634	0.19856	1.86253	0.30404
1.23620	0.19863	1.89294	0.30415
1.25606	0.19856	1.92335	0.30404
1.27592	0.19863	1.95376	0.30415
1.29578	0.19856	1.98417	0.30404
1.31812	0.24825	2.01837	0.38013
1.34046	0.19856	2.05258	0.30404
1.36280	0.18204	2.08679	0.27875
1.41762	0.18204	2.17042	0.27875
1.47203	0.18204	2.25404	0.27875
1.52664	0.18204	2.33767	0.27875
1.57877	0.16550	2.41749	0.25342
1.63090	0.18204	2.49732	0.27875
1.68303	0.16548	2.57714	0.25338
1.73268	0.16550	2.65316	0.25342
1.78481	0.18204	2.73299	0.27875
1.83694	0.16550	2.81281	0.25342
1.88907	0.18204	2.89264	0.27875
1.94368	0.18202	2.97626	0.27871
1.99829	0.18204	3.05988	0.27875
2.05042	0.16550	3.13970	0.25342
2.10007	0.16550	3.21573	0.25342
2.14972	0.16548	3.29175	0.25338
2.19688	0.14894	3.36397	0.22806
2.24404	0.16550	3.43619	0.25342
2.29369	0.16550	3.51222	0.25342
2.34086	0.14894	3.58444	0.22806
2.38802	0.16550	3.65666	0.25342
2.43767	0.16548	3.73268	0.25338
2.48732	0.16550	3.80870	0.25342
2.53696	0.16548	3.88472	0.25338
2.58661	0.16550	3.96075	0.25342
2.63378	0.14894	4.03297	0.22806
2.68094	0.16550	4.10519	0.25342
2.72811	0.14894	4.17741	0.22806
2.77031	0.13240	4.24203	0.20273
2.83733	0.15722	4.34466	0.24074
2.93166	0.15722	4.48911	0.24074
3.02351	0.14894	4.62975	0.22806
3.11287	0.14895	4.76659	0.22808
3.20224	0.14894	4.90342	0.22806
3.28912	0.14067	5.03646	0.21539
3.38097	0.16549	5.17710	0.25340
3.47530	0.14895	5.32154	0.22808
3.56218	0.14067	5.45458	0.21539
3.64658	0.14067	5.58383	0.21539
3.73370	0.14895	5.71687	0.22808
3.82283	0.14894	5.85370	0.22806
3.90971	0.14067	5.98674	0.21539
3.99411	0.14067	6.11598	0.21539
4.08099	0.14895	6.24902	0.22808
4.17036	0.14894	6.38586	0.22806
4.25972	0.14895	6.52270	0.22808
4.34909	0.14894	6.65954	0.22806
4.43845	0.14895	6.79638	0.22808
4.52782	0.14894	6.93322	0.22806
4.62215	0.16549	7.07766	0.25340
4.71648	0.14895	7.22210	0.22808
4.80833	0.15722	7.36275	0.24074
4.90017	0.14894	7.50339	0.22806
4.98954	0.14895	7.64023	0.22808
5.07642	0.14067	7.77327	0.21539
5.16579	0.15722	7.91011	0.24074
5.25763	0.14894	8.05075	0.22806
5.34203	0.13240	8.17999	0.20273
5.42147	0.13240	8.30163	0.20273

CALCULATIONS FOR GRAVIMETRIC FLOW EXPERIMENTS

C-70-77 TREATED WITH 2% NH4OH

RUN NO. = 198 SO2 = 2000. PPM TEMP = 200. DEG. F.
DATE = 9 16 71 NO = 150. PPM F(T) = 1500. CC/MIN
DRY WT.= 103.10 MG O2 = 3.5 % H2SO4 = 77.32 %
CORRECTION= -5.10 MG H2O = 6.0 %

MEAN LOAD GMS SO2/100 GMS C	DIFFERENTIAL RATE MGM SO2/GM C-MIN	MEAN LOAD GMS ACID/100 GMS C	DIFFERENTIAL RATE MGM ACID/GM C-MIN
0.95503	0.39182	1.46239	0.59997
0.99421	0.39182	1.52238	0.59997
1.03094	0.34287	1.57863	0.52502
1.06768	0.39182	1.63488	0.59997
1.10686	0.39182	1.69488	0.59997
1.14604	0.39175	1.75487	0.59986
1.18767	0.44084	1.81862	0.67504
1.22685	0.34280	1.87861	0.52491
1.26113	0.34287	1.93111	0.52502
1.29787	0.39182	1.98736	0.59997
1.33950	0.44077	2.05110	0.67493
1.38113	0.39182	2.11485	0.59997
1.40316	0.04895	2.14860	0.07495
1.42031	0.29385	2.17484	0.44995
1.44969	0.29385	2.21984	0.44995
1.48397	0.39182	2.27233	0.59997
1.52071	0.34287	2.32858	0.52502
1.55499	0.34280	2.38108	0.52491
1.58927	0.34287	2.43358	0.52502
1.62356	0.34280	2.48607	0.52491
1.65784	0.34287	2.53857	0.52502
1.69212	0.34280	2.59107	0.52491
1.72641	0.34287	2.64356	0.52502
1.75824	0.29385	2.69231	0.44995
1.79008	0.34287	2.74106	0.52502
1.82681	0.39175	2.79730	0.59986
1.86109	0.29392	2.84980	0.45007
1.89293	0.34280	2.89855	0.52491
1.97129	0.47345	3.01854	0.72497
2.09128	0.32650	3.20228	0.49996
2.18619	0.31019	3.34852	0.47497
2.27984	0.31019	3.49101	0.47497
2.37290	0.31019	3.63350	0.47497
2.46350	0.29385	3.77224	0.44995
2.55411	0.31019	3.91098	0.47497
2.64717	0.31019	4.05347	0.47497
2.74022	0.31019	4.19597	0.47497
2.83328	0.31016	4.33845	0.47494
2.92633	0.31019	4.48094	0.47497
3.01938	0.31019	4.62343	0.47497
3.10999	0.29387	4.76218	0.44999
3.19815	0.29385	4.89716	0.44995
3.28875	0.31019	5.03590	0.47497
3.36181	0.31019	5.17840	0.47497
3.47731	0.32650	5.32464	0.49996
3.57282	0.31019	5.47088	0.47497
3.66832	0.32650	5.61712	0.49996
3.76628	0.32650	5.76711	0.49996
3.86178	0.31019	5.91334	0.47497
3.95728	0.32650	6.05959	0.49996
4.05523	0.32650	6.20957	0.49996
4.15074	0.31019	6.35581	0.47497
4.24624	0.32650	6.50206	0.49996
4.34664	0.34285	6.65580	0.52498
4.44950	0.34285	6.81329	0.52498
4.57438	0.48974	7.00453	0.74992
4.67479	0.17958	7.15827	0.27498
4.75315	0.34285	7.27826	0.52498
4.90498	0.33468	7.51075	0.51247
5.10823	0.34283	7.82198	0.52496
5.31148	0.33468	8.13321	0.51247
5.51473	0.34283	8.44444	0.52496
5.71798	0.33466	8.75566	0.51245
5.91879	0.33468	9.06314	0.51247
6.11714	0.32652	9.36688	0.49998
6.31305	0.32650	9.66686	0.49996
6.50651	0.31835	9.96309	0.48747
6.69996	0.32650	10.25931	0.49996
6.89587	0.32652	10.55929	0.49998
7.09427	0.33468	10.86303	0.51247
7.29502	0.33466	11.17050	0.51245
7.49583	0.33468	11.47798	0.51247
7.69418	0.32650	11.78171	0.49996
7.89009	0.32652	12.08170	0.49998
8.09579	0.35916	12.39668	0.54997
8.30394	0.33466	12.71541	0.51245
8.49739	0.31019	13.01163	0.47497
8.68595	0.31835	13.30037	0.48747
8.87696	0.31835	13.59285	0.48747
9.06797	0.31835	13.88533	0.48747
9.25653	0.31019	14.17406	0.47497
9.44754	0.32650	14.46654	0.49996
9.63854	0.31019	14.75902	0.47497
9.82466	0.31019	15.04401	0.47497
10.01077	0.31018	15.32899	0.47496
10.13076	0.08979	15.51272	0.13749
10.22137	0.21224	15.65147	0.32499
10.34870	0.21223	15.84645	0.32497

APPENDIX A-18

LITERATURE STUDY ON SOLVENT EXTRACTION

A literature survey on the removal of sulfur from carbon by extraction was made.

The paper by Prchlik, et al.[14] was of particular interest. The paper discussed a detailed study based on both literature and experimental work of sulfur extraction from spent gas works purification mass (iron oxide). Literature references on 10 solvent systems for sulfur extraction from spent purification mass were given. Solubility data for sulfur in various solvents were given. These data are shown in the following section. Diagrams of bench scale extraction apparatus and proposed commercial equipment are given. In reviewing various solvents and running bench scale tests, Prchlik, et al. reached the following conclusions:

1) Carbon disulfide, while an excellent solvent, is discounted due to the health and explosion hazards inherent in its handling.

2) Chlorinated solvents, trichloroethylene and dichlorobenzene, were discounted primarily due to cost although it was also mentioned that trichloroethylene will not remove the pitch or naphthalene present in the gas being treated.

3) Tetralin was considered an excellent solvent but was discounted because of expense and difficulty in removing it from the purification mass.

4) A toluene-xylene mixture was considered the best solvent in view of the requirement to remove pitch and naphthalene as well as sulfur to regenerate the purification mass.

Ammonium sulfide was not considered by the authors, presumably because of its reactivity with the iron oxide.

Equilibrium Data - Sulfur-Solvent Systems

Solubility of Sulfur in Ammonium Sulfide

No extensive data on the solubility of sulfur in ammonium sulfide was found. Previous extraction processes operated near room temperature and under these conditions the solubility was reported to be 18-24% by weight of sulfur in solution[14,15]. Since the pressure of H_2S and NH_3 were important for extraction studies at higher temperatures these data are shown in Tables A-18-1 and A-18-2 and Figure A-18-1.

Table A-18-1. VAPOR PRESSURES OF H_2S, NH_3, AND H_2O OVER AQUEOUS $(NH_4)_2S$ SOLUTIONS

Temp., °C	NH_3, % by Wt.	H_2S, % by Wt.	Vapor Pressure, mm. Hg		
			H_2S	NH_3	H_2O
20	1.38	1.40	53.3	0	16.3
20	2.68	2.68	65.6	0	16.2
20	6.77	6.81	130.1	0	15.8
20	8.05	8.03	154.8	5.6	15.1
20	9.41	9.40	190.0	13.0	14.3
40	2.31	2.33	92.0	8.2	49.1
40	5.88	5.86	183.4	22.2	44.7
40	7.21	7.26	220.5	26.9	48.4
40	9.34	9.36	293.2	30.4	47.9
60	3.22	3.25	134.1	25.5	125.1
60	5.54	5.56	205.0	48.5	127.3
60	6.80	6.81	250.9	76.1	113.5
60	9.00	9.05	365.0	145.0	105.0

Table A-18-2. VAPOR PRESSURES OF H_2S, NH_3, AND H_2O OVER AQUEOUS $(NH_4)_2HS$ SOLUTIONS

Temp., °C	NH_3, % by Wt.	H_2S, % by Wt.	Vapor Pressure, mm. Hg		
			H_2S	NH_3	H_2O
20	0.80	1.58	115.7	0	13.9
20	2.14	4.23	163.0	0	15.2
20	2.97	5.93	197.6	0	16.1

Figure A-18-1. Equilibrium vapor pressures of hydrogen sulfide and ammonia over aqueous ammonia solutions at 20°C

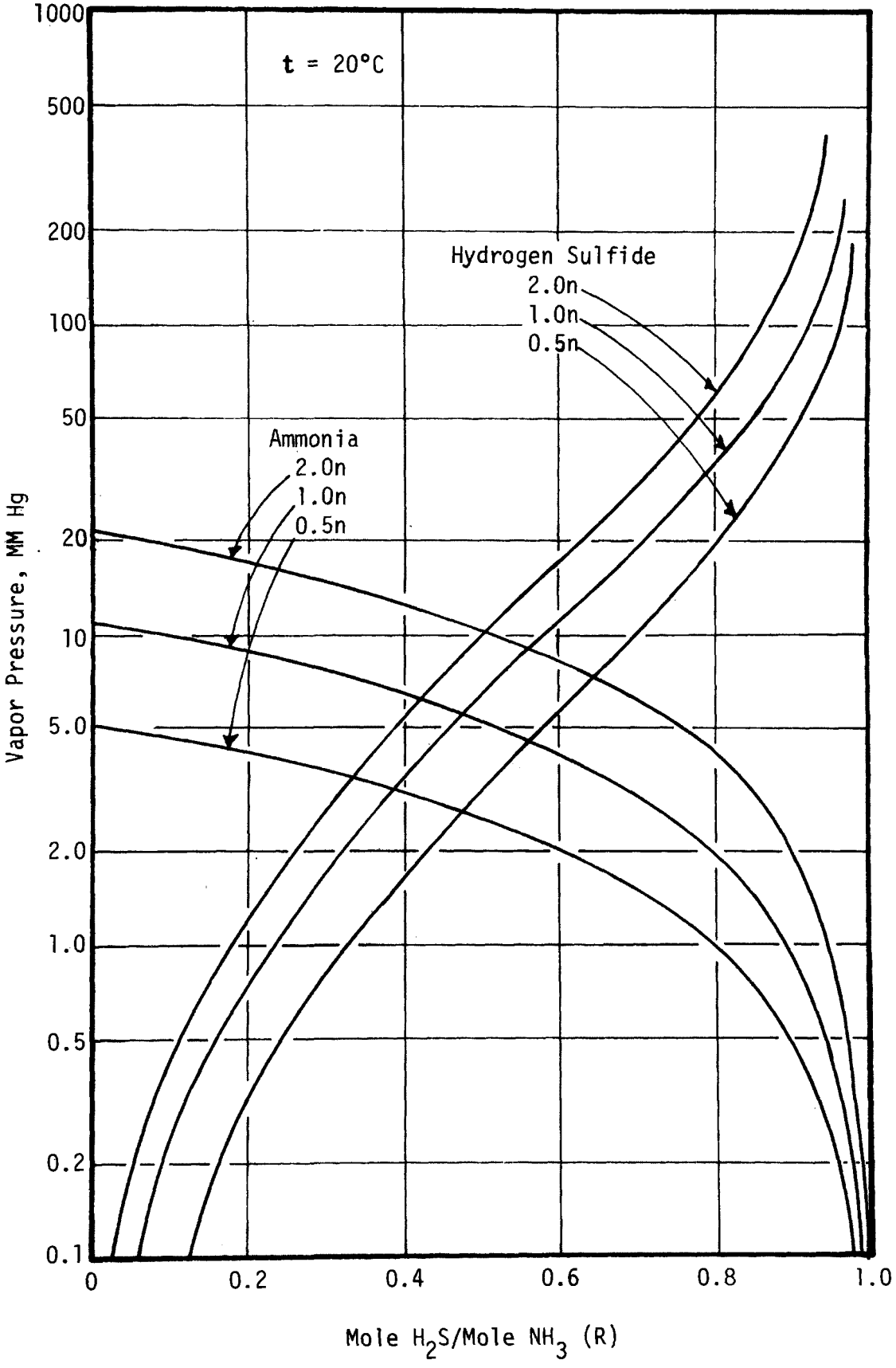

Solubility of Sulfur in Carbon Disulfide

The solubility of sulfur in carbon disulfide is strongly dependent upon temperature, reaching 90% at 98°C. Data from the literature on solubility are contained in Table A-18-3[16].

Table A-18-3. SOLUBILITY OF SULFUR IN CARBON DISULFIDE

Temp., °F	% Sulfur in Solution	Temp., °F	% Sulfur in Solution
-110	1.0	0	19.0
-100	1.5	10	23.5
-90	2.0	20	30.0
-80	2.5	30	38.5
-70	3.2	40	50.0
-60	4.2	50	60.0
-50	5.5	60	66.0
-40	7.1	70	71.0
-30	9.5	80	78.5
-20	12.0	90	86.0
-10	15.0	98	90.1

Solubility of Sulfur in Xylene

The solubility of sulfur in meta and para-xylene is up to 21.8% in solution is shown in Table A-18-4[16]. There is no solid phase of sulfur in equilibrium with the solution above 21.8% and a liquid-liquid separation occurred. There was

Table A-18-4. SOLUBILITY OF SULFUR IN XYLENE

m-Xylene

Temp., °C	% Sulfur in Solution
25	1.969
45	3.604
80	10.29

Rhombic Sulfur-p-Xylene

% Sulfur in Solution	Equilibrium Temp., °C
11.0	85.0
13.95	92.5
17.85	100.5

Monoclinic Sulfur-p-Xylene

% Sulfur in Solution	Equilibrium Temp., °C
16.25	98.2
16.3	98.0
17.85	103.3
20.38	106.0
21.8	107.0

apparently the formation of amorphous sulfur. Table A-18-5[16] gives the solubility results before measurable amounts of amorphous sulfur were formed.

These data indicate that sulfur and p-xylene are initially mixcible in all proportions above about 190°C. However, if the equilibrium temperature is maintained, reseparation of liquid phases occurs, probably due to the formation of

Table A-18-5. SOLUBILITY OF SULFUR IN p-XYLENE ABOVE 21% CONCENTRATIONS BEFORE PHASE SEPARATION

% Sulfur in Solution	Equilibrium Temp., °C	% Sulfur in Solution	Equilibrium Temp., °C
20.38	94.0	44.1	167.5
21.8	101.0	45.7	171.0
25.9	117.7	46.3	175.0
27.95	124.5	48.3	175.0
28.04	124.2	61.7	190.0
30.22	130.0	71.2	190.0
31.95	137.3	81.0	184.0
34.6	144.5	85.6	176.0
34.9	149.0	87.9	162.5
39.9	158.5	90.0	150.0
44.0	167.0	91.0	143.0

amorphous sulfur, resulting in a rise in the temperature of complete miscibility. The equilibrium temperatures finally obtained are contained in Table A-18-6.

Table A-18-6. SOLUBILITY OF SULFUR IN p-XYLENE AT ELEVATED TEMPERATURES

% Sulfur in Solution	Equilibrium Temp., °C	% Sulfur in Solution	Equilibrium Temp., °C
16.25	80	39.9	165.0
21.8	109.0	44.0	174.5
25.9	121.7	44.1	174.5
27.8	127.0	45.7	179.5
27.95	129.0	46.3	183.5
29.1	132.0	48.3	196.0
30.22	133.7	87.9	177.0
31.95	141.5	90.0	155.0
34.6	148.25	91.0	147.5
34.9	150.0	96.2	84.0
36.0	154.0		

The equilibrium temperature rises with sulfur concentration below 48.3% and decreases with sulfur concentration above 87.9%. There does not appear to be a maximum, however. Rather the low and high concentration curves appear to be entirely separate. The temperatures above which two phases exist and below which one phase exists are:

S in Solution, %	Equilibrium Temp., °C
44.0	235.0
46.3	220.0
48.3	206.0
87.9	187.0
90.0	203.0
91.0	205.0

Smisek and Cerney[17] also present data on the solubility of sulfur in xylene as shown in Table A-18-7. These data agree rather well with the literature information in previous tables.

Table A-18-7. SOLUBILITY OF SULFUR IN XYLENE

Temperature, °C	Concentration, Wt. %
25	1.73
45	3.24
85	10.78
100	18.8
107	24.1

The following equilibrium data as presented in Prchlik's article[14] are referenced to the original author:

System: Sulfur-Benzene[18]

Temp., °C	g. S/100 g. Sat. Soln.
25	2.074
54	5.165
84	13.02

System: Sulfur-Toluene

Soln. Temp., °F	Dissolved g. of S in 100 g. of Sat. Solns.	Determined By
-10	0.576	Jacek[19]
0	0.923	Jacek[19]
0	0.897	Hildebrand-Jenks[18]
13	1.545	Delaplace[20]
15.5	1.649	Jacek[19]
20	1.827	Delaplace[20]
23	1.889	Delaplace[20]
25	2.018	Hildebrand-Jenks[18]
35	2.722	Hildebrand-Jenks[18]
40	2.35	Burden-Newling[21]
50	3.68	Burden-Newling[21]
54	4.85	Hildebrand-Jenks[18]
60	5.27	Burden-Newling[21]
70	7.83	Burden-Newling[21]
80	11.1	Burden-Newling[21]
83.5	11.64	Hildebrand-Jenks[18]
90	15.3	Burden-Newling[21]
100	20.9	Burden-Newling[21]

System: Sulfur-p-Xylene[22]

Temp., °C	g. S/100 g. Sat. Soln.
85	11.9
92.5	13.95
98.0	16.3
100.5	17.85
107.0	21.8
117-121	25.9
124-129	27.95

System: Sulfur-Pitch Oil (From Carbonization of Bituminous Coal)[22]

Temp. °C	B.P., °C: S.G.:	Pitch Oil Fraction by Boiling Point Range					
		80-100 .87	85-120 .88	120-220 .882	150-200 .885	210-300 1.01	220-300 1.02
15		2.1	2.3	2.5	2.6	6.0	7.0
30		3.0	4.0	5.3	5.8	8.5	8.5
50		5.2	6.1	8.3	8.7	10.0	12.0
80		11.8	13.7	15.2	21.0	37.0	41.0
100		15.2	18.7	23.0	26.4	52.5	54.0
110		----	23.0	26.2	31.0	105.0	115.0
120		----	27.0	32.0	38.0	----	----
130		----	----	38.7	43.8	----	----

APPENDIX A-19

DETAILED DATA FROM COMBINED SULFUR STRIPPING/H_2S GENERATION STUDIES

		Page
1.	Run SHG-1	507
2.	Run SHG-2	512
3.	Run SHG-3	517
4.	Run SHG-5	522
5.	Run SHG-7	527
6.	Run SHG-8	532
7.	Run SHG-9	537
8.	Run SHG-10	542
9.	Run SHG-11	548

RUN SHG-1

A. EXPERIMENTAL DATA - H_2S GENERATION/S STRIPPING

1. Virgin Carbon
   a. % Sulfur (Combustion Anal.), P_{sc} = 0.65%

2. Inlet Carbon -
   a. % Sulfur (Combustion Anal.), P_{si} = 20.70%
   b. Acid Titration, P_{vi} =
   c. Material Rate, R_i = 40.6 lbs./hr.

3. Intermediate Stage Carbon
   a. Stage 8, % Sulfur, P_{S8} =
   b. Stage 7, % Sulfur, P_{S7} =
   c. Stage 6, % Sulfur, P_{S6} =
   d. Stage 5, % Sulfur, P_{S5} =
   e. Stage 4, % Sulfur, P_{S4} =
   f. Stage 3, % Sulfur, P_{S3} =
   g. Stage 2, % Sulfur, P_{S2} =
   h. Stage 1, % Sulfur, P_{S1} =

4. Outlet Carbon
   a. % Sulfur (Combustion Anal.), P_{so} = 15.79%
   b. Material Rate, R_o = 37.3 lbs./hr.

5. Inlet Gas
   a. % H_2 (26.0% by Rota) = 26.8 Chrom. %
   b. H_2 Gas Rate (55% @ 4.3 PSI) = 66 CFH @ 70°F
   c. N_2 Gas Rate (25.8% of 640 @ 4.3 PSI) = 188 CFH @ 70°F

6. Intermediate Stage Gas Analysis

Stage	% H_2	% H_2S	% N_2	% SO_2	% H_2O	% CO	% CO_2
1	21.4	0.88	72.0	0	0.08	0	0.04
2	4.1	0	70.4	0.3	0.56	0	0.05
3	21.8	2.96	71.7	0	0	0	0.04
4	1.3	0	91.1	0	0	0	0.04
5	18.1	6.0	71.9	0	0.14	0	0.04
6	16.0	6.2	71.4	0	0.49	0	0.05
7	15.8	8.4	71.0	0	0.90	0	0.10

7. Outlet Gas Analysis
   a. % H_2 = 16.2%
   b. % H_2S = 4 1%
   c. % N_2 = 68.3%
   d. % SO_2 = 0.2%
   e. % H_2O = 6.3%
   f. % CO = ---
   g. % CO_2 = 1.0%
   h. % Sulfur (as S1) = 1.5%

8. Temperature

Stage	Carbon/Gas, °F	Stage	Carbon/Gas, °F
1	768/800	5	801/806
2	771/	6	799/
3	781/800	7	---/801
4	778/	8	734/

9. Cyclone Product
   a. Sulfur =
   b. Material Rate =
   c. % Material +40 Mesh =
   d. % Material -40 Mesh =

B. SULFUR MATERIAL BALANCE, SULFUR REMOVAL, AND H_2S CONVERSION

1. Run Start = ~1680-1690

2. Run Times
   a. Run Time = 1680-1890
   b. Steady State Period = 1720-1890
   c. Inlet Carbon Analysis = 1647-1817 (-73 min)
   d. Outlet Carbon Analysis = 1776-1946 (+56 min)

3. Inlet Sulfur Loading, P_{si} = 20.70%
   Outlet Sulfur Loading, P_{so} = 15.79%

4. Inlet Material Rate, R_{si} = 40.6 lbs./hr.
   Outlet Material Rate, R_{so} = 37.3 lbs./hr.

5. Cyclone Sulfur Loading, P_{scy} = % } negligible
   Cyclone Material Rate, R_{scy} = 0.0055 lbs./hr. } in balance

6. Gas Rate In, q_T = 254 CFH @ 70°F
   N_2 Rate In, q_{N_2} = 188 CFH @ 70°F

7. H_2 Conc. In, 100 $(y_{H_2})_i$ =
   H_2 Conc. Out, 100 $(y_{H_2})_o$ =

8. H_2S Conc. Out, 100 $(y_{H_2S})_o$ =

9. SO_2 Conc. Out, 100 y_{SO_2} =

10. H_2O Conc. Out, 100 $(y_{H_2O})_o$ =

11. CO Conc. Out, 100 y_{CO_o} =

12. CO_2 Conc. Out, 100 $(y_{CO_2})_o$ =

13. Sulfur Vapor Out, R_{svo} =

SS - 1720-1890

OUTLET CAPAC. 1776 - 1946

GAS AND CARBON FLOW RATES

4" DIA REGENERATOR
RUN NO [illegible]
FEED SG - 53
DATE 1/31/73

TIME	OPERATING NOTES	GAS FLOW RATES: O2 SEAL LEG R-6 RR	O2 SEAL LEG R-6 CFH	O2 SEAL LEG LFA-C RR	O2 SEAL LEG LFA-C CFH	ROTA PRESS PSIG	N2 RR	N2 APP CFH	N2 COR CFH	HIGH H2S RR	HIGH H2S APP CFH	HIGH H2S COR. CFH	LOW H2S RR	LOW H2S APP CFH	LOW H2S COR. CFH	H2 RR	H2 APP CFH	H2 COR. CFH	CO2 RR	CO2 APP CFH	CO2 COR. CFH	STEAM RR	STEAM APP	STEAM COR.	CO RR	CO APP CFH	CO COR. CFH	EXHAUST OFF-GAS FT/SEC	EXHAUST SHROUD FT/SEC	CARBON FLOW RATES: INLET LB/HR	OUTLET LB/HR	OUTLET LB/HR	OUTLET LB	ENGINE RPM	LB/HR
[illegible]	TO FEED ON, H_2 ON					[illegible]																													
[illegible]		[illegible]		23		[illegible]	[illegible]	[illegible]	[illegible]							55														[illegible]	[illegible]	[illegible]	[illegible]		
[illegible]																55														[illegible]	[illegible]	[illegible]	[illegible]		
[illegible]																														[illegible]	[illegible]	[illegible]	[illegible]		
[illegible]		[illegible]		[illegible]		[illegible]	[illegible]																							[illegible]	[illegible]	[illegible]	[illegible]		
[illegible]																														[illegible]	[illegible]	[illegible]	[illegible]		
[illegible]		[illegible]		[illegible]		[illegible]	[illegible]																							[illegible]	[illegible]	[illegible]	[illegible]		
[illegible]	DROPPED CARBON FEED TO 35-3					FLOW FROZEN																								[illegible]	[illegible]	[illegible]	[illegible]		

CROSS REFERENCES: _____

CARBON SPECIFICATIONS:
TYPE _____
SKID NO _____
SAMPLE NO _____

DATE	SHIFT	OPERATOR
	8-4	
	4-12	
	12-8	

READ AND UNDERSTOOD
W. A. Wheel, Jr. 2/12/73

*NOTE: Rota. Press. - Pressure at Outlet of Rotameter Read at N_2 Rotameter Outlet; App. - Gas Flow Rate, No Correction; Cor. - Gas Flow Rate Corrected for Pressure and Density; R-6 - N_2 Flow for Lower Carbon Seal Leg; LFA-101 - N_2 Flow for Upper Carbon Seal Leg.

4" DIA. REGENERATOR
RUN NO. SG-[illegible]
FEED SG-S3
DATE 1/31/73

GAS ANALYSIS

TIME	OPERATOR NOTES	INLET GAS ANALYSIS H_2S	SO_2	CO_2	CO	H_2O	H_2	N_2	EXIT GAS ANALYSIS H_2S	SO_2	CO_2	CO	H_2O	H_2	N_2
[illegible]		0	0	0.73	0	0	11.0	88.3							
[illegible]		0	0	0.024	0	0	29.4	71.4	[illegible]	[illegible]	[illegible]	[illegible]	[illegible]	[illegible]	
[illegible]		0	0	0.033	0	0	29.1	71.1							
[illegible]		0	0	0.024	0	0	29.7	71.1							
[illegible]									3.24	0.157	0.740	0	5.[illegible]7	26.7	68.0
[illegible]									4.08	0.154	>1	0	[illegible]8	26.5	69.3
[illegible]									4.36	0.179	0.934		[illegible]6	26.2	63.7
[illegible]	Switched to stage	then back to outlet may not be S.S. yet. →							4.16	0.165	>1		5.[illegible]2	26.5	68.3
[illegible]															
[illegible]															
[illegible]															
[illegible]															
[illegible]															
[illegible]															
[illegible]															

STAGE	H_2S	SO_2	CO_2	CO	H_2O	H_2	N_2
1	2.32	0	0.[illegible]2	0	0.08	33.2	72.[illegible]
2	0	5.30	0.[illegible]	0	0.56	27.6	70.4
3	2.96	0	0.038	0	0	33.8	71.7
4	0	0	0.038	0	0	1.2	97.1
5	6.00	0	0.03[illegible]	0	0.14	29.1	70.9
6	6.20	0	0.050	0	0.70	26.2	71.4
7	5.40		0.[illegible]		0.90	26.0	71.0

CROSS REFERENCES: _____

CARBON SPECIFICATIONS:
TYPE _____
SKID NO. _____
SAMPLE NO. _____

DATE	SHIFT	OPERATOR
	8-4	
	4-12	
	12-8	

READ AND UNDERSTOOD	
W. A. Ward, Jr.	2/12/73

STEADY STATE
1720 - 1890

COLUMN TEMPERATURES, PRESSURES, AND PRESSURE DROPS

4" DIA. REGENERATOR
RUN NO SMG-1
FEED SG-85
DATE 1/31/73

| TIME | OPERATOR NOTES | COLUMN PRESSURES AND PRESSURE DROPS, IN. H_2O | | | | | | | | | | | | | | | | COLUMN TEMPERATURES, °F | | | | | | | | | | | | | | | |

RUN SHG-2

A. EXPERIMENTAL DATA - H_2S GENERATION/S STRIPPING

1. Virgin Carbon
   a. % Sulfur (Combustion Anal.), P_{sc} =

2. Inlet Carbon - Precursor C-72-108 - Act. $(0.598)(10^{-3})$
   a. % Sulfur (Combustion Anal.), P_{si} = 20.31%
   b. Acid Titration, P_{vi} =
   c. Material Rate, R_i = 35.1 lbs./hr.

3. Intermediate Stage Carbon
   a. Stage 8, % Sulfur, P_{S8} =
   b. Stage 7, % Sulfur, P_{S7} =
   c. Stage 6, % Sulfur, P_{S6} =
   d. Stage 5, % Sulfur, P_{S5} =
   e. Stage 4, % Sulfur, P_{S4} =
   f. Stage 3, % Sulfur, P_{S3} =
   g. Stage 2, % Sulfur, P_{S2} =
   h. Stage 1, % Sulfur, P_{S1} =

4. Outlet Carbon
   a. % Sulfur (Combustion Anal.), P_{so} = 4.85%
   b. Material Rate, R_o = 29.1 lbs./hr.

5. Inlet Gas
   a. % H_2 (29.3% by Rotameter) = 32.0 Chrom. %
   b. H_2 Gas Rate (57 RR x 1.1 FF = 3 PSI) = 67 CFH @ 70°F
   c. N_2 Gas Rate (41% of 360 @ 3 PSI) = 162 CFH @ 70°F

6. Intermediate Stage Gas Analysis

Stage	% H_2	% H_2S	% N_2	% SO_2	% H_2O	% CO	% CO_2
1	----	----	----	---	----	---	----
2	7.8	0	73.3	0.1	0.52	0	0
3	24.7	0	72.8	0	0	0	0
4	24.2	1.0	74.3	0	0.25	0	0
5	21.5	4.4	74.6	0	0	0	0
6	13.0	6.1	71.2	0	0.41	0	0.05
7	10.3	16.9	73.8	0	0.61	0	0.1

7. Outlet Gas Analysis
   a. % H_2 = 10.0%
   b. % H_2S = 13.4%
   c. % N_2 = 68.5%
   d. % SO_2 = 0
   e. % H_2O = 8.5%
   f. % CO = 0
   g. % CO_2 = 1.25%
   h. % Sulfur (as S_1) = 5.5%

8. Temperature

Stage	Carbon/Gas, °F	Stage	Carbon/Gas, °F
1	942/997	5	1001/997
2	970/	6	970/
3	982/997	7	---/970
4	967/	8	840/

9. Cyclone Product
   a. Sulfur = 3131 (Start
   b. Material Rate =
   c. % Material +40 Mesh =
   d. % Material -40 Mesh =

B. SULFUR MATERIAL BALANCE, SULFUR REMOVAL, AND H_2S CONVERSION

1. Run Start = 3131 (Started C at Feeder +95 min)
2. Run Times
   a. Run Time = 3226-3408
   b. Steady State Period = 3262-3408 (+36)
   c. Inlet Carbon Analysis = 3167-3313 (-95)+36
   d. Outlet Carbon Analysis = 3326-3472 (+64)+36
3. Inlet Sulfur Loading, P_{si} = 20.31%
   Outlet Sulfur Loading, P_{so} = 4.85%
4. Inlet Material Rate, R_{si} = 35.1 lbs./hr.
   Outlet Material Rate, R_{so} = 29.1 lbs./hr.
5. Cyclone Sulfur Loading, P_{scy} = % } negligible
   Cyclone Material Rate, R_{scy} = 0.0033 lbs./hr.
6. Gas Rate In, q_T =
   N_2 Rate In, q_{N_2} = 162 CFH @ 70°F
7. H_2 Conc. In, 100 $(y_{H_2})_i$ = 32.0 vol. %
   H_2 Conc. Out, 100 $(y_{H_2})_o$ =
8. H_2S Conc. Out, 100 $(y_{H_2S})_o$ =
9. SO_2 Conc. Out, 100 y_{So} =
10. H_2O Conc. Out, 100 $(y_{H_2O})_o$ =
11. CO Conc. Out, 100 y_{CO_o} =
12. CO_2 Conc. Out, 100 $(y_{CO_2})_o$ =
13. Sulfur Vapor Out, R_{svo} =

SS 3262-3408
OUT ANAL 3326-3472

GAS AND CARBON FLOW RATES

4" DIA. REGENERATOR
RUN NO. [illegible]
FEED [illegible]
DATE 1 FEB 73

TIME	OPERATOR NOTES	C. SEAL LEG R-6	C. SEAL LEG LFA-101	ROTA PRES	N2 RR	N2 APP CFH	N2 COR CFH	HIGH H2S RR	HIGH H2S APP CFH	HIGH H2S COR. CFH	LOW H2S RR	LOW H2S APP CFH	LOW H2S COR. CFH	H2 RR	H2 APP CFH	H2 COR. CFH	CO2 RR	CO2 APP CFH	CO2 COR. CFH	STEAM RR	STEAM APP	STEAM COR.	CO RR	CO APP CFH	CO COR. CFH	EXHAUST OFF-GAS FT/SEC	EXHAUST SHROUD FT/SEC	CARBON FLOW RATES INLET	CARBON FLOW RATES OUTLET	CYCLONE PRES
[illegible]	ADJUST CE[illegible]																													
[illegible]					[illegible]	[illegible]	[illegible]							50	[illegible]	[illegible]												[illegible]	[illegible]	
[illegible]	950 # [illegible]																													
[illegible]					[illegible]	[illegible]	[illegible]							50	[illegible]	[illegible]														
[illegible]																														
[illegible]	CARBON NOT FLOWING THROUGH COLUMN. RPM 9 DEGREED, PI 3 @ 13, LIS 102 [illegible] CARBON FEED & SIGHT FLOW OFF CARBON HEATER OFF																													
[illegible]	RESTARTED RUN - VALVES AT CARBON HEATER STUCK - PRIED OPEN AND LEFT OPEN																													
[illegible]	[illegible]				[illegible]									70	[illegible]	[illegible]												[illegible]	—	
[illegible]																														
[illegible]	[illegible]																													
[illegible]	[illegible]																													
[illegible]					53									—	—	—														
[illegible]	[illegible]																													
[illegible]	[illegible]																													
[illegible]	[illegible]																													
[illegible]		[illegible]	65	—	71									50	[illegible]	[illegible]											[illegible]	[illegible]	[illegible]	
[illegible]																											[illegible]	[illegible]	[illegible]	
[illegible]		76	65		71									51													[illegible]	[illegible]	[illegible]	
[illegible]																											[illegible]	[illegible]	[illegible]	
[illegible]																											[illegible]	[illegible]	[illegible]	
[illegible]					[illegible]	[illegible]								57																
[illegible]																											[illegible]	[illegible]

4" DIA. REGENERATOR
RUN NO. SHG-2
FEED SG-85
DATE 2/1/73

GAS ANALYSIS

TIME	OPERATOR NOTES	INLET GAS ANALYSIS H_2S	SO_2	CO_2	CO	H_2O	H_2	EXIT GAS ANALYSIS H_2S	SO_2	CO_2	CO	H_2	H_2	N_2
3:45	H_2 at 50						16.9							
3:58	"						22.8							
3:70	"						23.7							
3:72	at 55						24.0							
3:96							25.0							
3:06	at 56						25.5							
3:07	at 57 %						25.5							
3:08						25.5								
3:22								13.3%	0	0.95	0	7.4%	9.6%	67.8
3:34								12.9		1.25		8.6	10.0	67.4
3:46								13.5		1.15		7.4%	10.0	68.6
3:73								13.2		1.20		9.0	10.25	68.4
3:90							avg.	13.5		1.44		9.1	9.7	68.5
3:02							these for analysis							
3:14														
3:24														
3:32														
3:50														
3:52														
3:54														
3:56														
3:66														
3:76														
3:87														

INTERMEDIATE GAS ANALYSIS

STAGE	H_2S	SO_2	CO_2	CO	H_2O	H_2	N_2
7	18.4	0	0.023	0	0.89	9.5	72.9
7	17.1	0	0.020	0	0.84	10.7	73.4
7	16.7	0	0.017	0	0.58	10.0	74.2
6	8.3	0	0.001	0	0.41	11.9	78.8
6	6.1	0	0.001	0	0.41	12.0	71.2
5	4.7	0	0	0	0	21.5	74.6
4	1.0	0	0	0	0.25	24.2	74.3
3	0	0	0	0	0	24.7	72.8
2	0	0.21	0	0	0.52	8.7	73.3
1							

need to multiply by 5

Avg. these two

Take this one

CROSS REFERENCES: _____

CARBON SPECIFICATIONS:
TYPE _____
SKID NO. _____
SAMPLE NO. _____

DATE	SHIFT	OPERATOR
	8-4	
	4-12	
2/1/73	12-8	BG, MN, GNB

READ AND UNDERSTOOD
W. A. Weil 2/12/73

SS 3262-3408

COLUMN TEMPERATURES, PRESSURES, AND PRESSURE DROPS

4" DIA REGENERATOR
RUN NO SHG-2
FEED SG-83
DATE 1 FEB 73

TIME	OPERATOR NOTES	COLUMN PRESSURES AND PRESSURE DROPS, IN. H_2O — P1 STAGE AND DP1 NUMBER 2	3	1	2	3	4	5	6	7	8	9	DPIA 1	4	42	43	44	45	46	48	43	49	47	45	43	41	40	MTA	#22
0700-1200	START HEATING TO 1000 °F																												
1000		14	19	14	19	1.5	1.6	1.8	2.0	2.2	2.4	1.9	7.9	925	933	943	935	970	940	950	950	922	600	1000	1000	1000	1000	500	925 60	
1000	START RUN													915	940	950	950	975	950	950	950	940	600	1000	1000	1000	1000	500	930 60	
1040		1.5	1.8	1.4	1.3	1.5	1.7	1.8	2.0	2.3	2.5	1.9	5.9	915	940	975	950	975	950	950	950	940	600	1000	1000	1000	1000	500	930 60	
[illegible]		1.5	1.8	1.4	1.3	1.5	1.8	1.9	2.0	2.2	2.4	1.8	6.9																
[illegible]		1.0	1.3																										
[illegible]		1.5	1.8	1.5	2.0	1.5	1.8	1.8	2.0	2.4	2.9	6-10	5.8	955	980	998	970	1000	985	916	250	511	320	1000	1015	1000	1015	750	875 60	559
[illegible]																													
[illegible]	START [illegible] C-VSA-22 LEAN [illegible] WITH C & RGSC GAS RATE																												
[illegible]		0.7	1.2	1.1	1.6	1.2	1.4	1.5	1.4	1.7	1.5	1.5	6.0	8	912	945	920	988	950	930	850	710	250	805	1015	1000	1000	550	870 70	187
[illegible]	[illegible]																												
[illegible]		1.0	1.6	1.5	1.8	1.5	1.6	1.6	1.9	2.3	2.5	1.9	5.69	9	915	982	957	970	965	800	635	770	400	1000	990	990	990	750	900 60	563
[illegible]	STEAM TEMP [illegible] FROM 900 TO 1000																												
[illegible]		1.2	1.6	1.5	1.9	1.5	1.7	1.7	1.8	2.2	2.5																		
[illegible]	FEED-down from [illegible]																												
[illegible]		1.3	1.6	1.4	1.9	1.5	1.7	1.7	1.8	2.2	2.4	1.9	5	945	970	980	965	1000	940	843	950	725	635	1000	990	990	990	750	950 60	412
3260		1.4	1.7	1.5	1.9	1.5	1.8	1.8	1.9	2.3	2.4	1.9	6	940	971	981	967	1010	975	840	570	537	400	1000	990	990	990	740	950 60	430
3260														935	970	980	963	994	962	832	1000	590	570	1000	1000	990	990	990	950 60	420
3260		1.3	1.1	1.3	1.7	1.4	1.6	1.6	1.7	2.0	2.3	1.9	8	930	970	985	970	1000	933	858	650	533	550	1000	1000	1000	1000	450	950 55	420
[illegible]	[illegible] STEAM HEATING FOR SHG-3																												
3400																													

CROSS REFERENCES: _____

CARBON SPECIFICATIONS:
TYPE _____
SKID NO _____
SAMPLE NO _____

DATE	SHIFT	OPERATOR
	8-4	
	4-12	
1 FEB 73	12-8	GNB, JBG, SMN

READ AND UNDERSTOOD	
W. A. Weir Jr	2/12/73

*NOTE: P2 - Inlet Column Pressure, P1 - Inlet Column Pressure, DPIA - Lower Carbon Bed, Log Pressure Drop; T2 - Column Carbon Temperatures, 1st Number Indicates 4" Column, 2nd Stage Number. T3 - Column Sec Temperatures, 1st Number Indicates 4" Column, 2nd Stage Number; MTA 1C1 - Temperature at Outlet of Column, MTA 2C - Temperature at Carbon Cooler Exit.

RUN SHG-3

A. EXPERIMENTAL DATA - H_2S GENERATION/S STRIPPING

1. Virgin Carbon
   a. % Sulfur (Combustion Anal.), P_{sc} =

2. Inlet Carbon -
   a. % Sulfur (Combustion Anal.), P_{si} = 20.35%
   b. Acid Titration, P_{vi} =
   c. Material Rate, R_i = 30.9 lbs./hr.

3. Intermediate Stage Carbon
   a. Stage 8, % Sulfur, P_{S8} =
   b. Stage 7, % Sulfur, P_{S7} =
   c. Stage 6, % Sulfur, P_{S6} =
   d. Stage 5, % Sulfur, P_{S5} =
   e. Stage 4, % Sulfur, P_{S4} =
   f. Stage 3, % Sulfur, P_{S3} =
   g. Stage 2, % Sulfur, P_{S2} =
   h. Stage 1, % Sulfur, P_{S1} =

4. Outlet Carbon
   a. % Sulfur (Combustion Anal.), P_{so} = 2.82%
   b. Material Rate, R_o = 23.85 lbs./hr.

5. Inlet Gas
   a. % H_2 (27.2% by Rotameter) = 29.8%
   b. H_2 Gas Rate (45% Scale, Assume 1.1 PSI) = 52 CFH @ 70°F
   c. N_2 Gas Rate = 139 CFH @ 70°F

6. Intermediate Stage Gas Analysis

Stage	% H_2	% H_2S	% N_2	% SO_2	% H_2O	% CO	% CO_2
1	21.2	0	73.3	0	0	0	0
2	3.6	0	72.4	0.27	0.63	0	0
3	22.6	0	75.0	0	0.002	0	0
4	21.2	2.9	74.0	0	0.16	0	0
5	19.7	2.4	76.0	0	0.22	0.2	0
6	13.8	4.0	74.8	0	0.48	0.04	0
7	5.7	16.1	76.1	0	0.48	0	0.08

7. Outlet Gas Analysis
   a. % H_2 = 3.1%
   b. % H_2S = 15.2%
   c. % N_2 = 70.7%
   d. % SO_2 = 0
   e. % H_2O = 5.9%
   f. % CO = 0
   g. % CO_2 = 1.8%
   h. % Sulfur (as S1) = 8.0%

8. Temperature

Stage	Carbon/Gas, °F	Stage	Carbon/Gas, °F
1	1130/1203	5	1147.1205
2	1168/	6	1115/
3	1178/1200	7	---/1192
4	1147/	8	914

9. Cyclone Product
   a. Sulfur =
   b. Material Rate =
   c. % Material +40 Mesh =
   d. % Material -40 Mesh =

B. SULFUR MATERIAL BALANCE, SULFUR REMOVAL, AND H_2S CONVERSION

1. Run Start = 3442

2. Run Times
   a. Run Time = 3442-3670
   b. Steady State Period = 3483-3670 (+41)
   c. Inlet Carbon Analysis = 3375-3562 (-108)+41
   d. Outlet Carbon Analysis = 3555-3742 (+72)+41

3. Inlet Sulfur Loading, P_{si} = 20.35%
   Outlet Sulfur Loading, P_{so} = 2.82%

4. Inlet Material Rate, R_{si} = 30.9 lbs./hr.
   Outlet Material Rate, R_{so} = 23.85 lbs./hr.

5. Cyclone Sulfur Loading, P_{scy} = %
   Cyclone Material Rate, R_{scy} = 0.0066 lb./hr.

6. Gas Rate In, q_T = 203 CFH @ 70°F
   N_2 Rate In, q_{N_2} = 148 CFH @ 70°F

7. H_2 Conc. In, 100 $(y_{H_2})_i$ = 29.8 vol. %
   H_2 Conc. Out, 100 $(y_{H_2})_o$ = 3.08 vol. %

8. H_2S Conc. Out, 100 $(y_{H_2S})_o$ = 15.22 vol. %

9. SO_2 Conc. Out, 100 y_{S_o} = 0

10. H_2O Conc. Out, 100 $(y_{H_2O})_o$ = 5.89 vol. %

11. CO Conc. Out, 100 y_{CO_o} = 0

12. CO_2 Conc. Out, 100 $(y_{CO_2})_o$ = 1.85 vol. %

13. Sulfur Vapor Out, R_{svo} =

SS 3483- 3670

GAS AND CARBON FLOW RATES

4" DIA REGENERATOR
RUN NO SHG-3
FEED SG-83
DATE 2 FEB 73

TIME	OPERATING NOTES	C SEAL LEG R-6 RR	C SEAL LEG R-6 CFH	C SEAL LEG LFA-101 RR	C SEAL LEG LFA-101 CFH	ROTA PRES PSIG	N2 RR	N2 APP CFH	N2 COR CFH	HIGH H2S RR	HIGH H2S APP CFH	HIGH H2S COR. CFH	LOW H2S RR	LOW H2S APP CFH	LOW H2S COR. CFH	H2 RR B.G.	H2 APP CFH	H2 COR. CFH	CO2 RR	CO2 APP CFH	CO2 COR. CFH	STEAM RR	STEAM APP #/HR	STEAM COR. #/HR	CO RR	CO APP CFH	CO COR. CFH	EXHAUST OFF-GAS FT/SEC	EXHAUST SHROUD FT/SEC	CARBON FLOW RATES INLET	CARBON FLOW RATES INLET LB/HR	CARBON FLOW RATES OUTLET LB/HR	CARBON FLOW RATES OUTLET LB.	CYCLONE PRES.	CYCLONE PRES. LB.
[illegible]	[illegible] to 12.5#/[illegible]																																		
[illegible]	Heat/[illegible] [illegible] to 30.9#/HR																														30.9				
[illegible]	START SIM																																		
[illegible]							35									45																12.0	24.0	[illegible]	
[illegible]																																14.0	[illegible]		
[illegible]							35									45																11.2	22.4		
[illegible]	[illegible] on H2 [illegible]																															12.5	[illegible]		
[illegible]																																11.7	[illegible]		
[illegible]																																13.5	[illegible]		
[illegible]																																[illegible]	[illegible]		
[illegible]																																11.0	[illegible]		
[illegible]																																			

CROSS REFERENCES: _____

CARBON SPECIFICATIONS:
TYPE _____
SKID NO _____
SAMPLE NO _____

DATE	SHIFT	OPERATOR
	8-4	
	4-12	
2/1/73	12-8	MN, BG, GNB

READ AND UNDERSTOOD	
W. A. Weigh	2/1/73

*NOTE: Rota. Press. - Pressure at Outlet of Rotameter Read at N2 Rotameter Outlet; App. - Gas Flow Rate, No Correction; Cor. - Gas Flow Rate Corrected for Pressure and Density; R-6 - N2 Flow for Lower Carbon Seal Leg; LFA-101 - N2 Flow for Upper Carbon Seal Leg.

GAS ANALYSIS

4" DIA. REGENERATOR
RUN NO. SHG-3
FEED SG-85
DATE 2/1/73

TIME ACT	TIME ELP	OPERATOR NOTES	INLET GAS ANALYSIS H_2S	SO_2	CO_2	CO	H_2O	H_2	N_2	EXIT GAS ANALYSIS H_2S	SO_2	CO_2	CO	H_2O	H_2	N_2	INTERMEDIATE GAS ANALYSIS STAGE	H_2S	SO_2	CO_2	CO	H_2O	H_2	N_2
	[illegible]	Set up New Inlet	No Conc.	Run Started																				
	[illegible]		0	0	0	0	0	24.2	74.0															
[illegible]	[illegible]		0	0	0	0	0	24.3	73.8															
	[illegible]		0	0	0	0	0	24.2	73.8															
	[illegible]		0	0	0	0	0	24.3	73.8															
	[illegible]									15.52	0	1.72	0	[illegible]	3.2	73.4								
	[illegible]									15.00	0	2.00	0	[illegible]	3.2	73.4								
	[illegible]									15.36	0	1.66	0	[illegible]	3.1	71.3								
	[illegible]									15.28	0	1.88	0	[illegible]	2.8	71.1								
	[illegible]									14.96		2.00		[illegible]	3.1	70.2								
	[illegible]																7	15.24	0	0.070	0.005	0.51	5.95	76.1
	[illegible]																7	15.07	0	0.080	0	0.48	5.70	76.1
	[illegible]																6	3.96	0	0	[illegible]	0.48	13.8	74.8
	[illegible]	(Incr. on press. to 27" H_2O)															1	0	0	0	0	0	21.2	73.3
	[illegible]																2	0	0.271	0	0	0.23	3.6	72.7
	[illegible]																3	0	0	0	0	0.002	22.6	75.0
	[illegible]																4	2.88	0	0	0	0.16	21.2	74.0
	[illegible]																5	2.54	0	0	0.022	0.22	19.7	76.0
	[illegible]									14.76	0	1.60	0	0.9%	2.9	70.3								
	[illegible]									14.76	0	1.40	0	[illegible]	2.9	71.3								

CROSS REFERENCES: _____

CARBON SPECIFICATIONS:
TYPE _____
SKID NO. _____
SAMPLE NO. _____

DATE	SHIFT	OPERATOR
	8-4	
	4-12	
2/1/73	12-8	BG, MN, GNB

READ AND UNDERSTOOD	
W. G. Wa[illegible]	2/12/73

SS 3483 -3670

COLUMN TEMPERATURES, PRESSURES, AND PRESSURE DROPS

4" DIA. REGENERATOR
RUN NO. SHG-3
FEED SG-83
DATE 2 FEB 73

| TIME | OPERATOR NOTES | COLUMN PRESSURES AND PRESSURE DROPS, IN. H_2O | | |

RUN SHG-5

A. EXPERIMENTAL DATA - H_2S GENERATION/S STRIPPING

1. Virgin Carbon
   a. % Sulfur (Combustion Anal.), P_{sc} =

2. Inlet Carbon -
   a. % Sulfur (Combustion Anal.), P_{si} = 19.78%
   b. Acid Titration, P_{vi} =
   c. Material Rate, R_i = 30.9 lbs./hr.

3. Intermediate Stage Carbon
   a. Stage 8, % Sulfur, P_{S8} =
   b. Stage 7, % Sulfur, P_{S7} =
   c. Stage 6, % Sulfur, P_{S6} =
   d. Stage 5, % Sulfur, P_{S5} =
   e. Stage 4, % Sulfur, P_{S4} =
   f. Stage 3, % Sulfur, P_{S3} =
   g. Stage 2, % Sulfur, P_{S2} =
   h. Stage 1, % Sulfur, P_{S1} =

4. Outlet Carbon
   a. % Sulfur (Combustion Anal.), P_{so} = 4.91%
   b. Material Rate, R_o = 25.1 lbs./hr.

5. Inlet Gas
   a. % H_2 (10.3% by Rotameter) = 5.4 Chrom. %
   b. H_2 Gas Rate (20 CFH x 1.1) = 22 CFH @ 70°F
   c. N_2 Gas Rate (48.5% x 360 x 1.1) = 192 CFH @ 70°F

6. Intermediate Stage Gas Analysis

Stage	% H_2	% H_2S	% N_2	% SO_2	% H_2O	% CO	% CO_2
1	4.0	0	91	0	0	0	0
2	0.5	0	79	>1	4.0	0.05	0.05
3	---	---	--	----	---	----	----
4	0.5	1.6	94	0	0.5	0.01	0
5	---	---	--	----	---	----	----
6	0	1.6	92	0.06	0	0	0.01
7	---	---	--	----	---	----	----

7. Outlet Gas Analysis
   a. % H_2 = 0
   b. % H_2S = 3.0%
   c. % N_2 = 88.0%
   d. % SO_2 = 0.07%
   e. % H_2O = 5.4%
   f. % CO = 0
   g. % CO_2 = 1.4%
   h. % Sulfur (as S_1) =

8. Temperature

Stage	Carbon/Gas, °F	Stage	Carbon/Gas, °F
1	1144/1212	5	1170/1208
2	1169/	6	1139/
3	1179/1204	7	---/1201
4	1140	8	951/

9. Cyclone Product
   a. Sulfur =
   b. Material Rate =
   c. % Material +40 Mesh =
   d. % Material -40 Mesh =

B. SULFUR MATERIAL BALANCE, SULFUR REMOVAL, AND H_2S CONVERSION

1. Run Start = 3784

2. Run Times
   a. Run Time = 3784
   b. Steady State Period = 3865-4135 (+41)
   c. Inlet Carbon Analysis = 3760-4027 (-108)+41
   d. Outlet Carbon Analysis = 3940-4207 (+72)+41

3. Inlet Sulfur Loading, P_{si} = 19.78%
   Outlet Sulfur Loading, P_{so} = 4.91%

4. Inlet Material Rate, R_{si} = 30.9 lbs./hr.
   Outlet Material Rate, R_{so} = 25.1 lbs./hr.

5. Cyclone Sulfur Loading, P_{scy} =
   Cyclone Material Rate, R_{scy} =

6. Gas Rate In, q_T = 201 CFH @ 70°F
   N_2 Rate In, q_{N_2} = 190 CFH @ 70°F

7. H_2 Conc. In, 100 $(y_{H_2})_i$ = 5.4 vol. %
   H_2 Conc. Out, 100 $(y_{H_2})_o$ = 0

8. H_2S Conc. Out, 100 $(y_{H_2S})_o$ = 3.0 vol. %

9. SO_2 Conc. Out, 100 y_{S_o} = 0.08 vol. %

10. H_2O Conc. Out, 100 $(y_{H_2O})_o$ = 5.40 vol. %

11. CO Conc. Out, 100 y_{CO_o} = 0

12. CO_2 Conc. Out, 100 $(y_{CO_2})_o$ = 1.40 vol. %

13. Sulfur Vapor Out, R_{svo} =

3940 - START
4130 - END
4210 STOP START

SS - 3865 - 4135
OUT ANAL. 3940-4207

PUMP OUT 3715 5 0.000

GAS AND CARBON FLOW RATES

4" DIA REGENERATOR
RUN NO SMG-5
FEED SG-83
DATE 2 FEB 73

TIME	OPERATING NOTES	C SEAL LEG R-5 RR	C SEAL LEG R-5 APP CFH	C SEAL LEG LFA-101 RR	C SEAL LEG LFA-101 APP CFH	ROTA PRES PSIG	N2 RR	N2 APP CFH	N2 COR CFH	HIGH H2S RR	HIGH H2S APP CFH	HIGH H2S COR. CFH	LOW H2S RR	LOW H2S APP CFH	LOW H2S COR. CFH	H2 RR	H2 APP CFH	H2 COR. CFH	CO2 RR	CO2 APP CFH	CO2 COR. CFH	STEAM RR	STEAM APP	STEAM COR.	CO RR	CO APP CFH	CO COR. CFH	EXHAUST OFF-GAS FT/SEC	EXHAUST SHROUD FT/SEC	CARBON FLOW RATES INLET		CARBON FLOW RATES OUTLET			
	SMG-5															10																			
																10																			
													(COR 197)			10		3	25 MIN CORRECTED N_2 @ 5% ON CHROMATOGRAPH													12.5	25.0		
																19			70% AS H_2 ROTAMETER													12.5	25.0	O	
	GRAINS SS																															12.8	25.6		
																20			(MIDDLE OF FLOAT)													12.4	24.8		
																20																13.0	26.0		
																20														20.9	12.5	25.0		
																20												Average		20.9	12.3	24.6		
																20												Flow		20.9	12.8	25.6		
																20												2352 #/hr		20.9	12.6	25.2		
																20														20.9	12.6	25.2		
																20														20.9	12.8	25.6		
																20														20.9	12.25	24.5		
																20														20.9	12.6	25.2		
	SAMPLE WATCH TO HOPPER																															13.0			
	END																																		

CROSS REFERENCES: _____

CARBON SPECIFICATIONS:
TYPE _____
SKID NO _____
SAMPLE NO _____

DATE	SHIFT	OPERATOR
	8-4	
	4-12	
	12-8	

READ AND UNDERSTOOD
W. A. Weil 2/12/73

*NOTE: Rota. Press. - Pressure at Outlet of Rotameter Read at N_2 Rotameter Outlet; App. - Gas Flow Rate, No Correction; Cor. - Gas Flow Rate Corrected for Pressure and Density; R-6 - N_2 Flow for Lower Carbon Seal Leg; LFA-101 - N_2 Flow for Upper Carbon Seal Leg.

GAS ANALYSIS

4" DIA. REGENERATOR
RUN NO. SHG-5
FEED SG-85
DATE 2/12/73

TIME ACT	TIME ELP	OPERATOR NOTES	INLET GAS ANALYSIS H_2S	SO_2	CO_2	CO	H_2O	H_2	N_2	TOT	EXIT GAS ANALYSIS H_2S	SO_2	CO_2	CO	H_2O	H_2	N_2	TOT	INTERMEDIATE GAS ANALYSIS STAGE	H_2S	SO_2	CO_2	CO	H_2O	N_2	N_2	TOT			
	8:7	STARTED SHG-5																												
		Calib. G.C.																												
	4:10							5.4	93	98.4																				
	4:23							5.4	93	98.4																				
	4:34										2.68	0.12	1.55	0	5.8	0	87.8	98												
	4:46										3.00	0.09	1.45	0	5.6	0	87.8	98												
	4:58										3.0	0.06	1.35	0	5.3	0	88.2	98												
	5:07																		1	0	.06	0	0	0.1	3.8	91	95			
	5:22																		1	0	0	0	0	0	4.0	91	95			
	5:34																		2	0	0.7	0.05		2.3		76				
	5:46																		2	-	[illegible]	0.05	0.05	4.0	0.5	79		SO_2 off scale		
	5:58																		4	1.6	0	0	0	0	0.5	94				
	6:13																		4	1.6	0	0	.01	1	0.5	94				
	6:27																		6	1.6	.05	0.01	0	0	0	93				
	6:35																		6	1.6	0.06	0.01	0	0	0	92				
	6:46																		2	0		0.05		1.0		50				
	6:57										2.0		1.5	0	4.3	0	89		2											
	6:90														4.3															

CROSS REFERENCES: _____

CARBON SPECIFICATIONS:
TYPE _____
SKID NO. _____
SAMPLE NO. _____

DATE	SHIFT	OPERATOR
	8-4	
	4-12	
	12-8	

READ AND UNDERSTOOD
W. A. [illegible] 2/12/73

SS 3865-4135

COLUMN TEMPERATURES, PRESSURES, AND PRESSURE DROPS

4" DIA. REGENERATOR
RUN NO. SHG-5
FEED 26-83
DATE 2/2/73

| TIME | OPERATOR NOTES | COLUMN PRESSURES AND PRESSURE DROPS, IN. H_2O | | |

RUN SHG-7

A. EXPERIMENTAL DATA - H_2S GENERATION/S STRIPPING

1. Virgin Carbon
   a. % Sulfur (Combustion Anal.), P_{sc} =

Precursor C-72-108

2. Inlet Carbon - Act. $0.701(10^{-3})$; Stg. 5 Act. $0.576(10^{-3})$
   a. % Sulfur (Combustion Anal.), P_{si} = 20.16%
   b. Acid Titration, P_{vi} =
   c. Material Rate, R_i = 30.9 lbs./hr.

3. Intermediate Stage Carbon
   a. Stage 8, % Sulfur, P_{S8} = 17.72%
   b. Stage 7, % Sulfur, P_{S7} = 6.56%
   c. Stage 6, % Sulfur, P_{S6} = 4.84%
   d. Stage 5, % Sulfur, P_{S5} = 4.44%
   e. Stage 4, % Sulfur, P_{S4} = 3.32%
   f. Stage 3, % Sulfur, P_{S3} = 3.20%
   g. Stage 2, % Sulfur, P_{S2} = 3.20%
   h. Stage 1, % Sulfur, P_{S1} = 2.32%

4. Outlet Carbon
   a. % Sulfur (Combustion Anal.), P_{so} = 2.8%
   b. Material Rate, R_o = 25.0 lbs./hr.

5. Inlet Gas
   a. % H_2 (35.8% by Rotameter) = 37.7%
   b. H_2 Gas Rate (5.7 CFH x 1.1) = 63 CFH @ 70°F
   c. N_2 Gas Rate (30% x 360 x 1.05) = 113 CFH @ 70°F

6. Intermediate Stage Gas Analysis

Stage	% H_2	% H_2S	% N_2	% SO_2	% H_2O	% CO	% CO_2
1							
2							
3							
4							
5							
6							
7							

7. Outlet Gas Analysis
   a. % H_2 = 5.2%
   b. % H_2S = 18.6%
   c. % N_2 = 64.7%
   d. % SO_2 = 0
   e. % H_2O = 6.4%
   f. % CO = 0
   g. % CO_2 = 1.7%
   h. % Sulfur (as S_1) =

8. Temperature

Stage	Carbon/Gas, °F	Stage	Carbon/Gas, °F
1	1135/1210	5	1198/1222
2	1175/	6	1025/
3	1180/1207	7	---/1192
4	1192	8	910/

9. Cyclone Product
   a. Sulfur =
   b. Material Rate =
   c. % Material +40 Mesh =
   d. % Material -40 Mesh =

B. SULFUR MATERIAL BALANCE, SULFUR REMOVAL, AND H_2S CONVERSION

1. Run Start = 3673

2. Run Times
   a. Run Time = 3673-3784
   b. Steady State Period = 3714-3784 (+41)
   c. Inlet Carbon Analysis = 3606-3676 (-108)+41
   d. Outlet Carbon Analysis = 3786-3856 (+72)+41

3. Inlet Sulfur Loading, P_{si} = 20.16%
   Outlet Sulfur Loading, P_{so} = 2.80%

4. Inlet Material Rate, R_{si} = 30.9 lbs./hr.
   Outlet Material Rate, R_{so} = 25.0 lbs./hr.

5. Cyclone Sulfur Loading, P_{scy} =
   Cyclone Material Rate, R_{scy} =

6. Gas Rate In, q_T = 201 CFH @ 70°F
   N_2 Rate In, q_{N_2} = 133 CFH @ 70°F

7. H_2 Conc. In, 100 $(y_{H_2})_i$ = 37.7 vol. %
   H_2 Conc. Out, 100 $(y_{H_2})_o$ = 5.20 vol. %

8. H_2S Conc. Out, 100 $(y_{H_2S})_o$ = 18.65 vol. %

9. SO_2 Conc. Out, 100 y_{S_o} = 0

10. H_2O Conc. Out, 100 $(y_{H_2O})_o$ = 6.55 vol. %

11. CO Conc. Out, 100 y_{CO_o} = 0

12. CO_2 Conc. Out, 100 $(y_{CO_2})_o$ = 1.66 vol. %

13. Sulfur Vapor Out, R_{svo} =

SS 3714 -3784

out - 3786 - 3856
ANALYSIS

GAS AND CARBON FLOW RATES

4" DIA REGENERATOR
RUN NO SHG-7
FEED SG-5N
DATE 2 FEB 73

TIME	OPERATING NOTES	GAS FLOW RATES: GAS METERS R-6 RR	R-6 CFH	LFA-101 RR	LFA-101 CFH	ROTA PRES PSIG	N2 RR	N2 APP CFH	N2 COR CFH	HIGH H2S RR	HIGH H2S APP CFH	HIGH H2S COR. CFH	LOW H2S RR	LOW H2S APP CFH	LOW H2S COR. CFH	H2 RR	H2 APP CFH	H2 COR. CFH	CO2 RR	CO2 APP CFH	CO2 COR. CFH	STEAM RR	STEAM APP #/HR	STEAM COR. #/HR	CO RR	CO APP CFH	CO COR. CFH	EXHAUST OFF-GAS FT/SEC	EXHAUST SHROUD FT/SEC	CARBON FLOW RATES: INLET	INLET LB/HR	OUTLET LB/HR	OUTLET LB/HR	SYSTEM PRES.	LB/HR
[illegible]	BEGIN SHG-7																																		
[illegible]							30									54														30.9	13.0	26.0			
[illegible]																															12.5	25.0			
[illegible]							30									54														30.5	12.5	27.0			
[illegible]																																			

CROSS REFERENCES: _____

CARBON SPECIFICATIONS:
TYPE _____
SKID NO _____
SAMPLE NO _____

DATE	SHIFT	OPERATOR
	8-4	
	4-12	
	12-8	GNB, TBG, SNM

READ AND UNDERSTOOD
W. G. Wood 2/22/73

*NOTE: Rota. Press. - Pressure at Outlet of Rotameter Read at N2 Rotameter Outlet; App. - Gas Flow Rate, No Correction; Cor. - Gas Flow Rate Corrected for Pressure and Density; R-6 - N2 Flow for Lower Carbon Seal Leg; LFA-101 - N2 Flow for Upper Carbon Seal Leg.

GAS ANALYSIS

4" DIA. REGENERATOR
RUN NO. SG-7
FEED SG-85
DATE 2/2/73

TIME	OPERATOR NOTES	INLET GAS ANALYSIS								EXIT GAS ANALYSIS								INTERMEDIATE GAS ANALYSIS										
HOT ELP		H_2S	SO_2	CO_2	CO	H_2O	H_2	N_2		H_2S	SO_2	CO_2	CO	H_2O	H_2	N_2		STAGE	H_2S	SO_2	CO_2	CO	H_2O	H_2	N_2			
[illegible]	Run started																											
[illegible]		0	0	0	0	0	28.0	67.0																				
[illegible]		0	0	0	0	0	28.1	67.1																				
[illegible]		0	0	0	0	0	28.0	67.0																				
[illegible]										0	0.33	0	0	0.[illegible]6	9.9	69.2												
[illegible]										18.5	0	1.66	0	5.[illegible]7	4.50	65.2												
[illegible]										19.2	0	1.91	0	8.[illegible]4	4.65	63.6												
[illegible]										18.7	0	1.50	0	6.[illegible]0	5.65	65.0												
[illegible]										18.2	0	1.56	0	6.[illegible]0	6.00	65.0												

CROSS REFERENCES: _____

CARBON SPECIFICATIONS:
TYPE _____
SKID NO. _____
SAMPLE NO. _____

DATE	SHIFT	OPERATOR
	8-4	
	4-12	
	12-8	

READ AND UNDERSTOOD
W. G. Wesley 2/12/73

COLUMN TEMPERATURES, PRESSURES, AND PRESSURE DROPS

4" DIA REGENERATOR
RUN NO. SHG-7
FEED SG-95
DATE 2 FEB 73

TIME	OPERATOR NOTES	COLUMN PRESSURES AND PRESSURE DROPS, IN. H_2O																COLUMN TEMPERATURES, °F																								
		PI STAGE AND DPI NUMBER															ΔP																									
		2	3			1	2	3	4	5	6	7	8	9			1	11	12	13	14	15 TI	16		18	23	17	FENWAL CONTROLLERS TIC							MTA		C COOLER INLET	
																												411	49	47	45	43	41	410		101	100	T1	T2
1:33	SSG-N SHG-7																																									
2:02		1.2	1.9			1.2	1.6	1.3	1.5	1.5	1.5	1.8	2.1	1.9			11.5	1137	1175	1150	1240	1226	921		920	958	944	520	195	[illegible]	[illegible]	[illegible]	210	750		100	60	450	
2:12		1.0	1.9			1.2	1.6	1.3	1.5	1.5	1.5	1.9	2.1	1.9			11.5	[illegible]	[illegible]	[illegible]	[illegible]	[illegible]	[illegible]		[illegible]	[illegible]	[illegible]	[illegible]	[illegible]	[illegible]	[illegible]	[illegible]	[illegible]	[illegible]		[illegible]	[illegible]	450	

CROSS REFERENCES: _____

CARBON SPECIFICATIONS:
TYPE _____
SKID NO _____
SAMPLE NO _____

DATE	SHIFT	OPERATOR
	8-4	
	4-12	
	12-8	

READ AND UNDERSTOOD
W. G. Wolf 2/12/73

*NOTE: P2 - Outlet Column Pressure, P1 - Inlet Column Pressure, DP1A - Lower Carbon Bed Dp Pressure Drop; T1 - Column Carbon Temperatures, 1st Number Indicates 4" Column, 2nd Stage Number, T10 - Column Gas Temperatures, 1st Number Indicates 4" Column, 2nd Stage Number; MTA 101 - Temperature at Outlet of Column; MTA 100 - Temperature at Carbon Cooler Exit.

RUN SHG-8

A. EXPERIMENTAL DATA - H_2S GENERATION/S STRIPPING

1. Virgin Carbon
   a. % Sulfur (Combustion Anal.), P_{sc} =

2. Inlet Carbon -
   a. % Sulfur (Combustion Anal.), P_{si} = 50.8%
   b. Acid Titration, P_{vi} =
   c. Material Rate, R_i = 25.2 lbs./hr.

3. Intermediate Stage Carbon
   a. Stage 8, % Sulfur, P_{S8} = 4.76%
   b. Stage 7, % Sulfur, P_{S7} = 4.88%
   c. Stage 6, % Sulfur, P_{S6} = 3.72%
   d. Stage 5, % Sulfur, P_{S5} = ----
   e. Stage 4, % Sulfur, P_{S4} = 3.40%
   f. Stage 3, % Sulfur, P_{S3} = 3.12%
   g. Stage 2, % Sulfur, P_{S2} = 3.04%
   h. Stage 1, % Sulfur, P_{S1} = 3.56%

4. Outlet Carbon
   a. % Sulfur (Combustion Anal.), P_{so} = 2.90%
   b. Material Rate, R_o = 24.9 lbs./hr.

5. Inlet Gas
   a. % H_2 (35.8% by Rotameter) = 36.7%
   b. H_2 Gas Rate (57 CFH @ 54 x 1.1 FF) = 63 CFH @ 70°F
   c. N_2 Gas Rate (30% x 360 x 1.05) = 113 CFH @ 70°F

6. Intermediate Stage Gas Analysis

Stage	% H_2	% H_2S	% N_2	% SO_2	% H_2O	% CO	% CO_2
1							
2							
3							
4							
5							
6							
7	23.1	2.6	69.4	0	0.42	0.01	0

7. Outlet Gas Analysis
   a. % H_2 = 27.7%
   b. % H_2S = 2.64%
   c. % N_2 = 69.4%
   d. % SO_2 = 0
   e. % H_2O = 0.41%
   f. % CO = 0.01%
   g. % CO_2 = 0
   h. % Sulfur (as S_1) =

8. Temperature

Stage	Carbon/Gas, °F	Stage	Carbon/Gas, °F
1	1132/1210	5	1178/1210
2	1168/----	6	1178/----
3	1178/1200	7	----/1208
4	1150/----	8	938/----

9. Cyclone Product
   a. Sulfur =
   b. Material Rate =
   c. % Material +40 Mesh =
   d. % Material -40 Mesh =

B. SULFUR MATERIAL BALANCE, SULFUR REMOVAL, AND H_2S CONVERSION

1. Run Start = 4172 (Started Feed from SHG-5)
2. Run Times 4172+108 = 4280+40 = 4320
   a. Run Time = 4280-4457
   b. Steady State Period = 4320-4457 (+41)
   c. Inlet Carbon Analysis = 4212-4349 (-108)+41
   d. Outlet Carbon Analysis = 4392-4529 (+72)+41
3. Inlet Sulfur Loading, P_{si} =
   Outlet Sulfur Loading, P_{so} =
4. Inlet Material Rate, R_{si} = 25.2 lbs./hr.
   Outlet Material Rate, R_{so} = 24.9 lbs./hr.
5. Cyclone Sulfur Loading, P_{scy} =
   Cyclone Material Rate, R_{scy} =
6. Gas Rate In, q_T = 176 CFH @ 70°F
   N_2 Rate In, q_{N_2} = 113 CFH @ 70°F
7. H_2 Conc. In, 100 $(y_{H_2})_i$ =
   H_2 Conc. Out, 100 $(y_{H_2})_o$ =
8. H_2S Conc. Out, 100 $(y_{H_2S})_o$ =
9. SO_2 Conc. Out, 100 y_{S_o} =
10. H_2O Conc. Out, 100 $(y_{H_2O})_o$ =
11. CO Conc. Out, 100 y_{CO_o} =
12. CO_2 Conc. Out, 100 $(y_{CO_2})_o$ =
13. Sulfur Vapor Out, R_{svo} =

4230 - Dumped last of recycle carbon into hopper.

GAS AND CARBON FLOW RATES

4" DIA. REGENERATOR
RUN NO. SMG-9
FEED SMG-5 RECYCLE
DATE 2-3-75

8RV14 5.3 RV16 B4 GC

TIME	OPERATOR NOTES	R. SEAL LEG R-6 RR	R. SEAL LEG LFA-101 RR	R. SEAL LEG LFA-101 CFH	ROTA PRES PSIG	N2 RR	N2 APP CFH	N2 COR. CFH	HIGH H2S RR	HIGH H2S APP CFH	HIGH H2S COR. CFH	LOW H2S RR	LOW H2S APP CFH	LOW H2S COR. CFH	H2O RR	H2O APP CFH	H2O COR. CFH	CO2 RR	CO2 APP CFH	CO2 COR. CFH	STEAM RR	STEAM APP	STEAM COR.	CO RR	CO APP CFH	CO COR. CFH	EXHAUST OFF-GAS FT/SEC	EXHAUST SHROUD FT/SEC	CARBON FLOW RATES INLET	CARBON FLOW RATES INLET LB/HR	CARBON FLOW RATES OUTLET	CARBON FLOW RATES OUTLET LB/HR	PRESSURE DROP	PRESSURE DROP LB
[illegible]	REDUCED [illegible]	[illegible]	[illegible]	[illegible]	1.7	30									54		7												[illegible]					
[illegible]					1.7	30		170							54	5.5	5.4														12.20	26.5		
[illegible]		15	25		1.7	30		170							54	5.5																		
[illegible] 2270																														25.2	13.3	25.2		
[illegible]		15	25		1.7	30		170							54	5.6														25.2	13.3	25.6		
[illegible]																														25.2	13.3	25.6		
[illegible]		15	25		1.7	30		170							54	5.6														25.2	13.3	25.4		
[illegible]																														25.2	13.3	25.4		
[illegible]		15	25		1.8	30		170							54	5.6														25.2	13.0	25.5		
[illegible]		15	25		1.8	30		170							54	5.6														25.2	13.0	25.5		
[illegible] START [illegible] FEED (3380)																																		
[illegible] FEED [illegible] TO 3.9 LBS PART/HR																																		

CROSS REFERENCES: _____

CARBON SPECIFICATIONS:
TYPE _____
SKID NO _____
SAMPLE NO _____

DATE	SHIFT	OPERATOR
2-3-73	8-4	EA, RCR, BYD, CMR
2-3-73	4-12	BYD, CMR, WCP, RW
2-	12-8	

READ AND UNDERSTOOD
W. G. Wade 2/12/73

*NOTE: Rota. Press. - Pressure at Outlet of Rotameter Read at N2 Rotameter Outlet; App. - Gas Flow Rate, No Correction; Cor. - Gas Flow Rate Corrected for Pressure and Density; R-6 - N2 Flow for Lower Carbon Seal Leg; LFA-101 - N2 Flow for Upper Carbon Seal Leg.

4" DIA. REGENERATOR
RUN NO. SHG-8
FEED SHG-5 PRODUCT
DATE 2/2/9[illegible]

GAS ANALYSIS

TIME ACT	TIME ELP	OPERATOR NOTES	INLET GAS ANALYSIS H_2S	SO_2	CO_2	CO	H_2O	H_2	N_2	EXIT GAS ANALYSIS H_2S	SO_2	CO_2	CO	H_2O	H_2	N_2	INTERMEDIATE GAS ANALYSIS STAGE	H_2S	SO_2	CO_2	CO	H_2O	H_2	N_2
	[illegible]						0.05	27.25	66.0															
										Estimated from spectrum = 22.0														
	[illegible]																7	2.80	0	0	0.025	0.53	22.6	69.1
	[illegible]																7	2.88	0	0	0.011	0.44	23.2	69.1
	[illegible]															Average	7	2.40	0	0	0.010	0.49	23.0	69.7
	[illegible]																7	2.64	0	0	0.009	0.35	23.2	69.4
	[illegible]		0	0	0	0	0	27.50	66.1															
	[illegible]		0	0	0	0	0	27.60	66.0															
	[illegible]		0	0	0	0	0	27.60	66.0															

CROSS REFERENCES: _____

CARBON SPECIFICATIONS:
TYPE _____
SKID NO. _____
SAMPLE NO. _____

DATE	SHIFT	OPERATOR
	8-4	
	4-12	
	12-8	

READ AND UNDERSTOOD	
W. A. Wood, Jr.	2/12/23

COLUMN TEMPERATURES, PRESSURES, AND PRESSURE DROPS

4" DIA. REGENERATOR
RUN NO. SHG-8
FEED SHG-5 RECYCLE
DATE 2/3/73

| TIME | OPERATOR NOTES | COLUMN PRESSURES AND PRESSURE DROPS, IN. H_2O | | | | | | | | | | | | | | | COLUMN TEMPERATURES, °F | | | | | | | | | | | | | | |

RUN SHG-9

A. EXPERIMENTAL DATA - H_2S GENERATION/S STRIPPING

1. Virgin Carbon
   a. % Sulfur (Combustion Anal.), P_{sc} =

2. Inlet Carbon -
   a. % Sulfur (Combustion Anal.), P_{si} = 20.12%
   b. Acid Titration, P_{vi} =
   c. Material Rate, R_i = 30.9 lbs./hr.

3. Intermediate Stage Carbon
   a. Stage 8, % Sulfur, P_{S8} =
   b. Stage 7, % Sulfur, P_{S7} =
   c. Stage 6, % Sulfur, P_{S6} =
   d. Stage 5, % Sulfur, P_{S5} =
   e. Stage 4, % Sulfur, P_{S4} =
   f. Stage 3, % Sulfur, P_{S3} =
   g. Stage 2, % Sulfur, P_{S2} =
   h. Stage 1, % Sulfur, P_{S1} =

4. Outlet Carbon
   a. % Sulfur (Combustion Anal.), P_{so} = 2.64%
   b. Material Rate, R_o = 24.6 lbs./hr.

5. Inlet Gas
   a. % H_2 (26.2% by Rotameter) = 27.3%
   b. H_2 Gas Rate (48 CFH x 1.1) = 5.3 CFH @ 70°F
   c. N_2 Gas Rate (37.6 x 360 x 1.1) = 149 CFH @ 70°F

6. Intermediate Stage Gas Analysis

Stage	% H_2	% H_2S	% N_2	% SO_2	% H_2O	% CO	% CO_2
1							
2							
3							
4							
5							
6							
7	5.9	14.2	76.4	0	0.5	0	0.1

7. Outlet Gas Analysis
   a. % H_2 = 3.06%
   b. % H_2S = 13.0%
   c. % N_2 = 71.7%
   d. % SO_2 = 0.007%
   e. % H_2O = 5.73%
   f. % CO = 0
   g. % CO_2 = 1.4%
   h. % Sulfur (as S_1) =

8. Temperature

Stage	Carbon/Gas, °F	Stage	Carbon/Gas, °F
1	1140/1210	5	1187/1202
2	1173/	6	1164/
3	1186/1195	7	----/1197
4	1165/	8	918/

9. Cyclone Product
   a. Sulfur =
   b. Material Rate =
   c. % Material +40 Mesh =
   d. % Material -40 Mesh =

B. SULFUR MATERIAL BALANCE, SULFUR REMOVAL, AND H_2S CONVERSION

1. Run Start = 4469 (Started SG-85C)

2. Run Times
   a. Run Time = 4577-4718
   b. Steady State Period = 4618-4718 (+41)
   c. Inlet Carbon Analysis = 4510-4610 (-108)+41
   d. Outlet Carbon Analysis = 4690-4790 (+72)+41

3. Inlet Sulfur Loading, P_{si} = 20.12%
   Outlet Sulfur Loading, P_{so} =

4. Inlet Material Rate, R_{si} = 30.9 lbs./hr.
   Outlet Material Rate, R_{so} = 24.6 lbs./hr.

5. Cyclone Sulfur Loading, P_{scy} =
   Cyclone Material Rate, R_{scy} =

6. Gas Rate In, q_T = 201 CFH @ 70°F
   N_2 Rate In, q_{N_2} = 149 CFH @ 70°F

7. H_2 Conc. In, 100 $(y_{H_2})_i$ =
   H_2 Conc. Out, 100 $(y_{H_2})_o$ =

8. H_2S Conc. Out, 100 $(y_{H_2S})_o$ =

9. SO_2 Conc. Out, 100 y_{S_o} =

10. H_2O Conc. Out, 100 $(y_{H_2O})_o$ =

11. CO Conc. Out, 100 y_{CO_o} =

12. CO_2 Conc. Out, 100 $(y_{CO_2})_o$ =

13. Sulfur Vapor Out, R_{svo} =

GAS AND CARBON FLOW RATES

4" DIA. REGENERATOR
RUN NO. SHG-9
FEED S.-85C
DATE 2/2/73

8RV14 Float

B. & Float R-6-15B TUBE (BROOKS)

TIME	REMARKS NOTES	GAS FLOW RATES: G. SEAL LEG R-6 RR	G. SEAL LEG R-6 CFH	G. SEAL LEG LFA-101 RR	G. SEAL LEG LFA-101 CFH	ROTA PRES PSIG	N2 RR	N2 APP CFH	N2 COR. CFH	HIGH H2S RR	HIGH H2S APP CFH	HIGH H2S COR. CFH	LOW H2S RR	LOW H2S APP CFH	LOW H2S COR. CFH	H2 RR	H2 APP CFH	H2 COR. CFH	CO2 RR	CO2 APP CFH	CO2 COR. CFH	STEAM RR	STEAM APP LB/HR	STEAM COR. LB/HR	CO RR	CO APP CFH	CO COR. CFH	EXHAUST OFF-GAS FT/SEC	EXHAUST SHROUD FT/SEC	CARBON FLOW RATES: INLET	INLET LB/HR	OUTLET	OUTLET LB/HR	[illegible]	[illegible] LB/HR
[illegible]	[illegible]	95			25.0	2.0/3.5	37.59	149								43	3.5	5.3												30.9	11.5	22.2			
[illegible]		95			25	2.0/3.5	37.59	149								44	3.5	5.3												30.9	13.2	25.4			
[illegible]		95			25	2.0/3.5	37.59	149								45	3.5	5.3												30.9	12.3	24.5			
[illegible]																														30.9	[illegible]	[illegible]	[illegible]		
[illegible]		[illegible]			25	2.0/3.6	[illegible]	150								46	3.6													30.9	13.0	24.3			
[illegible]	COULD NOT SET SULFUR TRAP INTO LINE BECAUSE OF [illegible] NOT ON TRAP.																													30.9	12.75	25.5			
[illegible]		95			25	2.0/3.5	[illegible]	149								46	3.8													30.9	12.0	24.0			
[illegible]																														30.9	12.0	[illegible]	[illegible]		
[illegible]	[illegible] SG-[illegible], SET CARBON RATE AT 30.9 LBS/HR — CUT OFF CARBON HEATER & COLUMN HEATERS																																		
[illegible]																														30.9	12.5	25.0			
[illegible]	[illegible] Carbon off																																		

CROSS REFERENCES: _____

CARBON SPECIFICATIONS:
TYPE _____
SKID NO _____
SAMPLE NO _____

DATE	SHIFT	OPERATOR
	8-4	
2 FEB. 73	4-12	GOB, BIG RN, RS
	12-8	

READ AND UNDERSTOOD	
W. R. Wiley	2/12/73

*NOTE: Rota. Press. - Pressure at Outlet of Rotameter Read at N2 Rotameter Outlet; App. - Gas Flow Rate, No Correction; Cor. - Gas Flow Rate Corrected for Pressure and Density; R-6 - N2 Flow for Lower Carbon Seal Leg; LFA-101 - N2 Flow for Upper Carbon Seal Leg.

4" DIA. REGENERATOR
RUN NO. SHG-9
FEED SG-85-C
DATE 2/2/73

GAS ANALYSIS

TIME ACT	TIME EDP	OPERATOR NOTES	INLET GAS ANALYSIS H_2S	SO_2	CO_2	CO	H_2O	H_2	N_2	EXIT GAS ANALYSIS H_2S	SO_2	CO_2	CO	H_2O	H_2	N_2	INTERMEDIATE GAS ANALYSIS STAGE	H_2S	SO_2	CO_2	CO	H_2O	H_2	N_2
	4430	Final Inlet gas conc.																						
	4439		0	0	0	0	0	22.9	74.4															
	4501		0	0	0	0	0	22.8	74.3															
	4513		0	0	0	0	0	22.8	74.4															
	4525		0	0	0	0	0	23.0	74.1															
	4537		0	0	0	0	0	22.9	74.1															
	4549																							
	4561																							
	4573																							
	4585									12.06	0.023	1.28	0	5.4	3.6	72.3								
	4597																							
	4609							not																
	4621									12.48	0.085	1.44	0	5.2	3.2	72.0								
	4633									13.12	0	1.30	0	5.8	3.0	73.4								
	4645									12.96	0.005	1.28	0	5.2	3.3	72.0								
	4657									13.24	0.020	1.75	0	5.1	2.8	70.6								
	4669									13.05	0	1.30	0	5.4	3.0	71.8								
	4681									12.80	0.011	1.36	0	5.1	3.2	71.5								
	4693																7	14.00	0	0.10	0	0.56	6.3	76.3
	4705								AVERAGE	13.0	0.007	1.40	0	5.3	3.06	71.7	7	14.16	0	0.11	0	0.50	5.9	76.3
	4717																7	14.32	0	0.12	0	0.50	5.9	76.6
	4729																6	2.40	0.090	0	0.28	0.61	9.0	73.8

CROSS REFERENCES: _____

CARBON SPECIFICATIONS:
TYPE _____
SKID NO. _____
SAMPLE NO. _____

DATE	SHIFT	OPERATOR
	8-4	
2/2	4-12	GNB, RG, MM, RS
	12-8	

READ AND UNDERSTOOD	
W. G. Wilsey	2/12/73

COLUMN TEMPERATURES, PRESSURES, AND PRESSURE DROPS

4" DIA. REGENERATOR
RUN NO. SHG-7
FEED SG-23 #6
DATE 2 FEB 73

| TIME | OPERATOR NOTES | COLUMN PRESSURES AND PRESSURE DROPS, IN. H_2O | | | | | | | | | | | | | | | | | | Sulfur Burner COLUMN TEMPERATURES, °F | | | | | | | | | | | | | | | | | |

RUN SHG-10

A. EXPERIMENTAL DATA - H_2S GENERATION/S STRIPPING

1. Virgin Carbon
   a. % Sulfur (Combustion Anal.), P_{sc} = 0.65%

2. Inlet Carbon -
   a. % Sulfur (Combustion Anal.), P_{si} = 19.81%
   b. Acid Titration, P_{vi} =
   c. Material Rate, R_i = 35 lbs./hr.

3. Intermediate Stage Carbon
   a. Stage 8, % Sulfur, P_{S8} = ---
   b. Stage 7, % Sulfur, P_{S7} = ---
   c. Stage 6, % Sulfur, P_{S6} = 8.0%
   d. Stage 5, % Sulfur, P_{S5} = 7.8%
   e. Stage 4, % Sulfur, P_{S4} = ---
   f. Stage 3, % Sulfur, P_{S3} = 7.9%
   g. Stage 2, % Sulfur, P_{S2} = 5.0
   h. Stage 1, % Sulfur, P_{S1} = 4.2%

4. Outlet Carbon
   a. % Sulfur (Combustion Anal.), P_{so} = 4.21%
   b. Material Rate, R_o = 28.9 lbs./hr.

5. Inlet Gas
   a. % H_2 = 36.1%
   b. H_2 Gas Rate = 79 CFH @ 70°F
   c. N_2 Gas Rate = 127 CFH @ 70°F

6. Intermediate Stage Gas Analysis

Stage	% H_2	% H_2S	% N_2	% SO_2	% H_2O	% CO	% CO_2
1	34.3	0	64.8	0	0	0	0
2	28.8	4.0	66.6	0	0	0.012	0
3	15.8	18.5	65.1	0	0.24	0.052	0.05
4	----	----	----	---	----	---	---
5	5.2	23.9	59.9	0	9.40	0	1.60
6	----	----	----	---	----	---	---
7	----	----	----	---	----	---	---

7. Outlet Gas Analysis
   a. % H_2 = 2.0%
   b. % H_2S = 27.3% 60.0%
   c. % N_2 = 60.0%
   d. % SO_2 = 0
   e. % H_2O = 9.04%
   f. % CO = 0
   g. % CO_2 = 1.8%
   h. % Sulfur (as S_1) = 6.2% (on Dry Basis)

8. Temperature

Stage	Carbon/Gas, °F	Stage	Carbon/Gas, °F
1	1132/1215	5	1120/1204
2	1135/1182	6	1219/1234
3	1072/1198	7	1024/1200
4	899/992	8	----/1248

9. Cyclone Product
   a. Sulfur = 25.4%
   b. Material Rate = 0.015 lb./hr.
   c. % Material +40 Mesh = 8.5%
   d. % Material -40 Mesh = 91.5%

B. SULFUR MATERIAL BALANCE, SULFUR REMOVAL, AND H_2S CONVERSION

1. Run Start =

2. Run Times
   a. Run Time = 2463-2818
   b. Steady State Period = 2574-2818 +90+21 = +111
   c. Inlet Carbon Analysis = 2481-2725 (-93)+111
   d. Outlet Carbon Analysis = 2636-2880 (-62)+111

3. Inlet Sulfur Loading, P_{si} = 19.81%
   Outlet Sulfur Loading, P_{so} = 4.21%

4. Inlet Material Rate, R_{si} = 35 lbs./hr.
   Outlet Material Rate, R_{so} = 28.9 lbs./hr.

5. Cyclone Sulfur Loading, P_{scy} = 25.4%
   Cyclone Material Rate, R_{scy} = 0.015 lb./hr.

6. Gas Rate In, q_T = 206 CFH @ 70°F
   N_2 Rate In, q_{N_2} = 127 CFH @ 70°F

7. H_2 Conc. In, 100 $(y_{H_2})_i$ = 36.1 vol. %
   H_2 Conc. Out, 100 $(y_{H_2})_o$ = 2.0 vol. %

8. H_2S Conc. Out, 100 $(y_{H_2S})_o$ = 27.3 vol. %

9. SO_2 Conc. Out, 100 y_{S_o} = 0

10. H_2O Conc. Out, 100 $(y_{H_2O})_o$ = 9.04 vol. % (by difference)

11. CO Conc. Out, 100 y_{CO_o} = 0

12. CO_2 Conc. Out, 100 $(y_{CO_2})_o$ = 1.80 vol. %

13. Sulfur Vapor Out, R_{svo} = 0.421 lb./hr.

SAMPLE CALCULATION

Sulfur in Off-Gas

Measured Quantities

W_S = Weight of Sulfur Recovered = 4.73 gms. = 0.0104 lbs.
T_{wt} = Temperature of Wet Test Meter = 99°F = P_{H2O} = 6.2% H_2O
Q = Cubic Feet of Gas = 3.35 ft.^{3} (less Sulfur)
t = Elapsed Time of Sample = 128 minutes

Calculations

$$q_T = \text{Dry Gas Flow Rate} = \left(\frac{(Q)(60)}{t}\right)\left(\frac{530}{T_{wt}+460}\right)\left(1 - \frac{P_{H2O}}{100}\right)$$

$$= \frac{(3.35)(60)(530)(1 - 0.062)}{(128)(554)}$$

$$= 1.40 \text{ CFH @ } 70^\circ\text{F}$$

$$\%\ S \text{ (Dry Basis)} = \frac{\left(\frac{W_S}{32}\right)(386)\left(\frac{60}{128}\right)(100)}{q_T + \left(\frac{W_S}{32}\right)(386)\left(\frac{60}{128}\right)}$$

$$= \frac{[(0.014)(386)(60)(100)]/[(32)(128)]}{q_T + \left(\frac{0.0104}{32}\right)(386)\left(\frac{60}{128}\right)}$$

$$= \frac{5.8805}{1.459}$$

$$= 4.03\%\ S_1$$

$$R_{svo} = \text{lbs. S/hr.} = \frac{(W_S)(60)}{(q_T)(t)}\ (q_{N2})$$

$$= \left(\frac{0.0104}{1.40}\right)\left(\frac{60}{128}\right)(127)$$

$$= 0.443 \text{ lbs. S/hr.}$$

Found leak in analysis system and measured it to be:

$$\frac{1.16 \text{ ft.}^3}{2 \text{ hours}}\ (0.938)\left(\frac{530}{554}\right) = 0.516 \text{ CFH @ } 70^\circ\text{F}$$

Corrected above sulfur gas results:

$$\%\ S = \frac{\left(\frac{0.0104}{32}\right)(386)\left(\frac{60}{128}\right)(100)}{1.40 - 0.516 + \left(\frac{0.0104}{22}\right)(380)\left(\frac{60}{128}\right)} = \frac{5.88}{0.943} = 6.24\%$$

$$R_{svo} = \#\ S/\text{hr.} = \left(\frac{0.0104}{1.40 - 0.516}\right)\left(\frac{60}{128}\right)(127) = \frac{(0.0104)(60)(127)}{(0.884)(128)}$$

$$= 0.700 \text{ lbs./hr.}$$

GAS ANALYSIS

4" DIA. REGENERATOR
RUN NO. SHG-10
FEED SG-84
DATE 2/22/73

TIME ACT	TEMP	OPERATOR NOTES	INLET GAS ANALYSIS H_2S	SO_2	CO_2	CO	H_2O	H_2	N_2	Σ	EXIT GAS ANALYSIS H_2S	SO_2	CO_2	CO	H_2	H_2	N_2	Σ	INTERMEDIATE GAS ANALYSIS STAGE	H_2S	SO_2	CO_2	CO	H_2O	H_2	N_2	Σ
	2357	Pump started																									
	2311							36.5	66.5																		
	2333	Cal. Mixt. — 0 Cal. ok — N_2 was ~ 0.7% low — ~ H_2 was ~ 1 per mesh ~ ~3% 1 PART IN 30																									
	2337							37.0	66.0																		
	2339							36.5	66.5																		
	2351							37.0	66.3																		
	2373	WITH 30% MIXT.						37.2	66.4																		
	2317	RECHECKED	H_2 CAL.	READING	TO	HIGH	— ABOVE	H_2	would actually be	~ 34%	will reset	H_2 rot.	— RESET CAL	FOR	H_2												
	2455	Reset H_2 by Rot to 38.3																									
	2457	RECHECKED	H_2 CAL.	WITH	30%	MIXT.					O.K.	Σ	$N_2 + H_2$	= 100.2													
	2419		0	0	0	0	0	36.5	63.8	100.3	24.0	0	1.66	0	2.0	3.0	63.0	93.7									
	2421										24.0	0	1.66	0	2.01	3.0	63.0	93.7									
	2442										24.4	0	1.77	0	1.97	2.8	62.9	93.8									
	2455										17.9	0	1.35	0	1.97	2.2	71.2	94.53									
	2467										17.6	0	1.10	0	1.11	2.0	71.2										
	2479										(3.8)	0	1.52	0	2.21	2.0	64.0	93.6									
	2497	H_2S Cal. check (2 div out of 80 off (read slightly low)																									
	2512										27.5	0	2.08	0	2.07	1.2	61.4	94.25									
	2524										27.5	0	2.10	0	1.95	1.2	61.5	94.30									
	2536										27.6	0	1.97	0	2.00	1.2	61.6										
	2548										19.4	0.150	1.15	0.178	1.02	3.5	64.0	89.07	19.4								
	2560																		6	24.4	0.170	1.27	0.150	0.58	3.5	63.4	88.47
	2572																		5	25.63	0	1.63	0	0.97	4.4	61.3	93.9
	2584																		5	25.2	0	1.68	0	1.23	4.8	61.5	94.4
	2596																		5	25.6	0	1.32	0	1.42	4.5	61.1	94.2
	2608		0	0	0	0	0	36.0	63.0	99.0																	
	2620		0	0	0	0	0	36.2	63.0	99.2																	
	2632		0	0	0	0	0	36.0	63.6	99.6	(Doubled flow thru sample loop to 0.4 cfh)																
	2644																		1	0	0	0	0	0	34.3	64.7	99.0
	2656																		1	0	0	0	0	0	34.3	64.9	99.2
	2668										25.92	0	1.52	0	5.49	2.0	60.9	95.83									
	2680										26.00	0	1.75	0	4.35	2.1	61.0	95.20									
	2692	RAN SPECTRUM - H_2O APPEARED UNUSUAL - REMOVED UP & DOWN QUICKLY - H_2O ELUTING OFF. APPEARS OFF BETWEEN Σ FROM 100 IS ACTUALLY H_2O																									
	2724										27.2	0	1.89	0	>10	1.7	60.8		← H_2O = 8.51 by diff.								
	2736										27.1		1.91		>10	2.0	60.0		← " = 8.99 " "								
	2758										27.5		1.69		>10	2.0	59.2		← " = 9.61 " "								
	2770																		3	18.9	0	0.05	0.045	0.28	15.4	65.2	99.9
	2782																		3	18.1	0	0.05	0.06	0.20	16.3	65.0	99.7

CROSS REFERENCES: _____

CARBON SPECIFICATIONS:
TYPE _____
SKID NO. _____
SAMPLE NO. _____

DATE	SHIFT	OPERATOR
2/22/73	8-4	GNC, CR, EA, KN
	4-12	
	12-8	

GAS ANALYSIS

4" DIA. REGENERATOR
RUN NO. SH6-10
FEED S6-34
DATE 2/22/73

TIME ACT	TIME ELP	OPERATOR NOTES	INLET GAS ANALYSIS H_2S	SO_2	CO_2	CO	H_2O	H_2			EXIT GAS ANALYSIS H_2S	SO_2	CO_2	CO	H_2O	H_2			INTERMEDIATE GAS ANALYSIS STAGE	H_2S	SO_2	CO_2	CO	H_2O	H_2	N_2	Σ			
	2704																		2	4.0	0	0	0.012	0	28.8	66.6	99.4			
	2516																		5	23.9	0	1.75	0	>10	5.2	59.8			H_2O = 8.35	
	2313																		5	23.9	0	1.45	0	>10	5.2	60.0			H_2O = 8.55	

CROSS REFERENCES: _____

CARBON SPECIFICATIONS:
TYPE _____
SKID NO. _____
SAMPLE NO. _____

DATE	SHIFT	OPERATOR
	8-4	
	4-12	
	12-8	

COLUMN TEMPERATURES, PRESSURES, AND PRESSURE DROPS

Changed to Stg. 7 @ 2470 min.

4" DIA. REGENERATOR
RUN NO. SNG-10
FEED SG-84
DATE 2-22-73

Read off Fenwal → USE POT.

TIME	OPERATOR NOTES	COLUMN PRESSURES AND PRESSURE DROPS, IN. H_2O — P1 STAGE AND DP1 NUMBER 2	3			1	2	3	4	5	6	7	8	9			DP1A 1		8	4	COLUMN TEMPERATURES, °F — 42	43	44	45	46	47	48	49	23	FENWAL CONTROLLERS TIC 49	47	45	43	41	40	37	34	101	102	NTA		103	IN. GAS COOLER INLET 11	22
2225	STARTED SG-84 FEED																																											
2230	SO_2 on H_2																																											
2230		0.8	1.4			1.8	1.3	1.7	2.1	1.7	1.4	1.8	1.7	2.0			2.0			1120	1090	1040	935	1050	1155	1225	1100	—	1000	25	150	200	200	1200	1200	780			1130	55			470
2320	LITE BURNER	OPERATING OK																																										
2340		1.0	1.4			1.7	1.7	1.7	2.0	2.2	1.2	1.7	.8	1.9			2.5			1122	1175	1035	955	1060	1195	1295	1120	—	1000	615	120	200	210	1200	1210	820			1210	50			5.0
2400																				1113	1110	1024	870	1055	1165	1282	1140	—	1020	575	135	200	210	1200	1210	820	1125	1200	1215	50		1245	5.0
2410	817 Now T147	1.4	1.5			1.6	1.3	1.8	2.0	2.7	1.4	2.0	0.9	1.9			1.8			1125	1125	1050	875	1105	1225	1240	1165	—	1045	620	130	200	220	1190	1215	840	1125	1200	1215	60		1245	4.5
2420	SG-SIGN BLOWER	ADDED H_2																												660	1178	200	210	200	1215	810	1185	920	1215	50		1245	
2500																			1255	1130	1050	855	1110	1170	1030	1170	—	1040				210	1210	1220		1180							5.5
2520		1.2	1.5			1.7	1.8	1.8	2.1	2.1	1.3	1.9	0.9	1.9			8			1135	1090	875	1124	1220	1225	1225	1185	—	1040	670	180	200	60	1200	1210	830	60	980	1215	50		1245	5.0
2540																			1280	1135	1060	910	1120	1223	1026	1185	—	1050	610	1190	200	170	1190	1220	840	190	1000	1250	50		1245	5.5
2600		1.1	1.2			1.6	1.8	1.7	2.3	2.1	1.3	2.0	0.9	1.9			9		1285	1140	1060	890	1125	1225	1030	1175	—	1055	575	1180	200	1200	1190	1210	835	1180	990	1250	50		1245	5.0
2620		1.2	1.5			1.7	1.8	1.6	2.2	2.2	1.4	2.2	0.9	1.7						1142	1[illegible]	1[illegible]	1[illegible]	1[illegible]	1[illegible]	1[illegible]			[illegible]	1[illegible]	1[illegible]	[illegible]	[illegible]	[illegible]	[illegible]	[illegible]	[illegible]	1[illegible]	1[illegible]	[illegible]		1[illegible]	4.5

* Taking C Samples or Lines Plugged

CROSS REFERENCES: _____

CARBON SPECIFICATIONS:
TYPE _____
SKID NO _____
SAMPLE NO _____

DATE	SHIFT	OPERATOR
2-22-73	8-4	GNR, CMR, SLP, AN
	4-12	
	12-8	

NOTES: P1 - Outlet Column Pressure, P2 - Inlet Column Pressure; DP1A - Lower Carbon Bed Log Pressure Drop; T1 - Column Carbon Temperatures, 1st Number Indicates 4" Column, 2nd Stage Number; T2 - Column Gas Temperatures, 1st Number Indicates 4" Column, 2nd Stage Number; NTA 101 - Temperature at Outlet of Column; NTA 102 - Temperature at Carbon Cooler Exit.

RUN SHG-11

A. EXPERIMENTAL DATA - H_2S GENERATION/S STRIPPING

1. Virgin Carbon
   a. % Sulfur (Combustion Anal.), P_{sc} = 0.65%

2. Inlet Carbon -
   a. % Sulfur (Combustion Anal.), P_{si} = 19.81%
   b. Acid Titration, P_{vi} =
   c. Material Rate, R_i = 35.0 lbs./hr.

3. Intermediate Stage Carbon
   a. Stage 8, % Sulfur, P_{S8} =
   b. Stage 7, % Sulfur, P_{S7} =
   c. Stage 6, % Sulfur, P_{S6} =
   d. Stage 5, % Sulfur, P_{S5} =
   e. Stage 4, % Sulfur, P_{S4} =
   f. Stage 3, % Sulfur, P_{S3} =
   g. Stage 2, % Sulfur, P_{S2} =
   h. Stage 1, % Sulfur, P_{S1} =

4. Outlet Carbon
   a. % Sulfur (Combustion Anal.), P_{so} = 8.27%
   b. Material Rate, R_o = (27.7) lbs. C/hr.
      30.2

5. Inlet Gas
   a. % H_2 = 0%
   b. H_2 Gas Rate = ---
   c. N_2 Gas Rate = 202 CFH @ 70°F

6. Intermediate Stage Gas Analysis

Stage	% H_2	% H_2S	% N_2	% SO_2	% H_2O	% CO	% CO_2
1							
2							
3							
4							
5							
6							
7							

7. Outlet Gas Analysis
   a. % H_2 = 0
   b. % H_2S = 1.32%
   c. % N_2 = 88.0%
   d. % SO_2 = 0.82%
   e. % H_2O = 9.0%
   f. % CO = 0
   g. % CO_2 = 2.0%
   h. % Sulfur (as S_1) = ---

8. Temperature

Stage	Carbon/Gas, °F	Stage	Carbon/Gas, °F
1	1070/1200	5	1085/1135
2	1035/1150	6	1207/1290
3	1040/1150	7	1170/1215
4	925/1020	8	---/1130

9. Cyclone Product
   a. Sulfur = 31.2%
   b. Material Rate = 0.021 lb./hr.
   c. % Material +40 Mesh = 17.2%
   d. % Material -40 Mesh = 82.8%

B. SULFUR MATERIAL BALANCE, SULFUR REMOVAL, AND H_2S CONVERSION

1. Run Start =

2. Run Times
   a. Run Time = 2820
   b. Steady State Period = 2931-2954 +90+121 = 111
   c. Inlet Carbon Analysis = 2838-2861 (-93)+111
   d. Outlet Carbon Analysis = 2992-3016 (+62)+111

3. Inlet Sulfur Loading, P_{si} = 19.08%
   Outlet Sulfur Loading, P_{so} = 8.27%

4. Inlet Material Rate, R_{si} = 35.0 lbs./hr.
   Outlet Material Rate, R_{so} = 30.85 lbs./hr.

5. Cyclone Sulfur Loading, P_{scy} = 31.2%
   Cyclone Material Rate, R_{scy} = 0.021 lb./hr.

6. Gas Rate In, q_T = 202 CFH @ 70°F
   N_2 Rate In, q_{N_2} = 202 CFH @ 70°F

7. H_2 Conc. In, $100\ (y_{H_2})_i$ = 0
   H_2 Conc. Out, $100\ (y_{H_2})_o$ = 0

8. H_2S Conc. Out, $100\ (y_{H_2S})_o$ = 1.32 vol. %

9. SO_2 Conc. Out, $100\ y_{S_o}$ = 0.82 vol. %

10. H_2O Conc. Out, $100\ (y_{H_2O})_o$ = 9.0 vol. %

11. CO Conc. Out, $100\ y_{CO_o}$ = 0

12. CO_2 Conc. Out, $100\ (y_{CO_2})_o$ = 2.0 vol. %

13. Sulfur Vapor Out, R_{svo} =

GAS AND CARBON FLOW RATES

4" DIA. REGENERATOR
RUN NO. SHG-11
FEED SG-24
DATE 2-22-73

R-153 R-Float Condensate

TIME	[illegible]	GAS FLOW RATES: C. SEAL LEG R-5		C. SEAL LEG IFA-101		ROTA PRES	N2 RR	N2 APP CFH	N2 COR. CFH	HIGH H2S RR	HIGH H2S APP CFH	HIGH H2S COR. CFH	LOW H2S RR	LOW H2S APP CFH	LOW H2S COR. CFH	H2 RR	H2 APP CFH	H2 COR. CFH	CO2 RR	CO2 APP CFH	CO2 COR. CFH	STEAM RR	STEAM APP	STEAM COR.	CO RR	CO APP CFH	CO COR. CFH	EXHAUST OFF-GAS	EXHAUST SAMPLE	CARBON FLOW RATES: INLET LB/HR	OUTLET LB/HR	OUTLET LB.	[illegible]	[illegible]
[illegible]	[illegible]					2.8	50	180	202																					35	[illegible]	[illegible]		
[illegible]						2.8	50	180	202																					35	[illegible]	[illegible]		
						2.8	50	180	202																					35	[illegible]	[illegible]		
						2.8	50	180	202																					35	14.5	24.0	~10.0	
[illegible]	[illegible]					2.8	50	180	202	VIRGIN REFUSE PUT INTO HOPPER																				35	15.5	21.0		
																														28				

CROSS REFERENCES: _____

CARBON SPECIFICATIONS:
TYPE _____
SKID NO _____
SAMPLE NO _____

DATE	SHEET	OPERATOR
	8-4	
2-22-73	4-12	[illegible]
	12-8	

*NOTE: Rota. Press. - Pressure at Outlet of Rotameter Read at N_2 Rotameter Outlet; App. - Gas Flow Rate, No Correction; Cor. - Gas Flow Rate Corrected for Pressure and Density; R-6 - N_2 Flow for Lower Carbon Seal Leg; IFA-101 - N_2 Flow for Upper Carbon Seal Leg.

PURGE FLOW ON OUTLET = 0.4

* NO BY DIFF

GAS ANALYSIS

4" DIA. REGENERATOR
RUN NO. SHG-11
FEED IG-34
DATE 2/22/73

TIME ACT	TIME ELP	OPERATOR NOTES	INLET GAS ANALYSIS H_2S	SO_2	CO_2	CO	H_2O	H_2	N_2	Σ	EXIT GAS ANALYSIS H_2S	SO_2	CO_2	CO	H_2O	H_2	N_2	Σ	INTERMEDIATE GAS ANALYSIS STAGE	H_2S	SO_2	CO_2	CO	H_2O	H_2
	[illegible]		~~2.5~~		~~1.5~~				100		2.2	0	1.5	0	10.8*	1.5	61.0	100							
	[illegible]		~~2.5~~	~~[illegible]~~	~~2.25~~	~~0~~	~~[illegible]~~	~~0~~	~~[illegible]~~		2.0	0.17	2.25	0	10.5*	0	87.5	100							
	[illegible]		~~1.6~~	~~2.35~~							1.6	0.25	2.35	0	8.3*	0	87.5	100	NOTE:	H_2O	OUT READ			+10%	
	[illegible]										1.4	0.4	2.0	0	7.7*	0	87.5	100		"	"	"	"	+10%	
	[illegible]										1.0	0.53	2.3	0	8.5	0	87.5	100	"	"	"	"	"	+10%	
	[illegible]										1.2	0.57	2.2	0	9.1	0	88.5	101.5							
	[illegible]										1.2	0.66	1.8	0	9.5	0	89.0	100.2							
*	[illegible]										1.2	0.82	2.2	0	8.9	0	89.0	101.1							
	[illegible]								SS PERIOD		1.3	0.88	1.8	0	[illegible]	0	88.2	101.1							
	[illegible]										1.4	0.83	2.0	0	9.2	0	88.0	101.4							
	[illegible]										1.4	0.82	2.0	0	9.1	0	87.8								
									AVG SS PERIOD		1.3	0.82	2.0	0	9.0	0	88	101.1							

CROSS REFERENCES: _____

CARBON SPECIFICATIONS:
TYPE _____
SKID NO. _____
SAMPLE NO. _____

DATE	SHIFT	OPERATOR
	8-4	
	4-12	
	12-8	

COLUMN TEMPERATURES, PRESSURES, AND PRESSURE DROPS

4" DIA. REGENERATOR
RUN NO 3HG-11
FEED
DATE 2-22-73

| TIME | OPERATOR NOTES | COLUMN PRESSURES AND PRESSURE DROPS, IN. H_2O | | | | | | | | | | | | | | | | | | COLUMN TEMPERATURES, °F | | | | | | | | | | | | | | | | | |

APPENDIX A-20

DERIVATIONS

		Page
1.	Derivation of Response Parameters Used for Integral Run	554
2.	Derivation of Mathematical Expressions for Calculation of Rate of Reaction To Form Sulfur - Differential Rate Studies in Batch Fluid Bed Reactor	572
3.	Derivation of Reaction Rate Equations for Sulfur Generation - For Continuous Acid Conversion Runs in 8 Stage, 4 Inch Diameter Fluid Bed Reactor	588
4.	Derivation of Space Velocity Design Equation for SO_2 Sorber	597
5.	Derivation of Design Equations for Sizing of SO_2 Sorber	602

APPENDIX A-20-1

DERIVATION OF RESPONSE PARAMETERS USED FOR INTEGRAL RUN

This section contains the equations used to calculate process performance during integral testing of the Westvaco SO_2 Recovery Process. Most are equations used throughout the process development so the derivations are not necessarily repeated in the other sections of Appendix A-20 which contain other equations used in data analysis in pre-integral operation.

A. SO_2 SORBER

1. SO_2 Removal Efficiency

Let P_{SR} = per cent SO_2 removal, %

Then

$$P_{SA} = 100 \left[\frac{\text{Inlet } SO_2 \text{ Conc.} - \text{Outlet } SO_2 \text{ Conc.}}{\text{Inlet } SO_2 \text{ Conc.}}\right]$$

$$P_{SA} = 100 \left[1 - \frac{\text{Outlet } SO_2 \text{ Conc.}}{\text{Inlet } SO_2 \text{ Conc.}}\right]$$

2. Carbon Attrition Rate

Let R_{CD} = carbon attrition rate, lbs. C/hr.

R_{18D} = total material collected from SO_2 sorber outlet gas, lbs./hr.

X_{eSc} = residual sulfur loading of regenerated carbon to SO_2 sorber, lbs. S/lb. C

P_{H2O} = per cent moisture of dust collected from SO_2 sorber outlet gas, %

P_S = total sulfur content of dust collected from SO_2 sorber outlet gas, %.

Then

[1] $$\# \text{ Mat'l/hr.} = \# \text{ C/hr.} + \# \text{ Residual S/hr.} + \# \text{ } H_2SO_4\text{/hr.} + \# \text{ } H_2O\text{/hr.}$$

and from above

[2] $$R_{18D} = R_{CD} + X_{eSc}\, R_{CD} + \frac{\text{lbs. } H_2SO_4}{\text{hr.}} + \frac{P_{H_2O}}{100} R_{18D}$$

but also the per cent sulfur is:

[3] $$\frac{\text{lbs. Residual S/hr. + lbs. } H_2SO_4\text{/hr. (32/98)}}{\text{lbs. Material/hr.}} = \frac{P_S}{100}$$

or

[4] $$\frac{X_{eSc}\, R_{CD} + \text{lbs. } H_2SO_4\text{/hr. (32/98)}}{R_{18D}} = \frac{P_S}{100}$$

therefore solving for lbs. H_2SO_4/hr.

[5] $$\text{lbs. } H_2SO_4\text{/hr.} = [\frac{P_S}{100}(R_{18D}) - X_{eSc}\, R_{CD}]\frac{98}{32}$$

Substituting [5] into [2]

[6] $$R_{18D}(1 - \frac{P_{H_2O}}{100}) = R_{CD} + X_{eSc}\, R_{CD} + 3.0625(\frac{P_S}{100})\, R_{18D} - 3.0625\, X_{eSc}\, R_{RD}$$

$$R_{18D}[1 - \frac{P_{H_2O}}{100} - 3.0625(\frac{P_S}{100})] = R_{CD}[1 + X_{eSc} - 3.0625\, X_{eSc}]$$

[7] $$R_{CD} = \frac{[1 - \frac{P_{H_2O}}{100} - 3.0625(\frac{P_S}{100})]R_{18D}}{[1 - 2.0625\, X_{eSc}]}$$

3. <u>Residual Sulfur Loading on Regenerated Carbon to Sorber</u>

Let P_{eSc} = per cent sulfur on inlet carbon, %
P'_{H_2O} = per cent moisture on inlet carbon, %
R_{Ti} = material rate into sorber, lbs./hr.
x = lbs. C/hr.
y = lbs. residual sulfur/hr.
z = lbs. moisture/hr.
X_{eSc} = lbs. sulfur/lb. C.

then

[1] $$x + y + z = R_{Ti}$$

[2] $$\frac{z}{R_{Ti}} = \frac{P'_{H2O}}{100}$$

[3] $$y/R_{Ti} = P_{eSc}/100$$

[4] $$y/x = X_{eSc}$$

---

[2] $$z = \frac{P'_{H2O}}{100} R_{Ti}$$

[3] $$y = \frac{P_{eSc}}{100} R_{Ti}$$

From [1], [2], [3]

[5] $$x = (1 - \frac{P'_{H2O}}{100} - \frac{P_{eSc}}{100})R_{Ti}$$

substituting [3] and [5] into [4]

$$X_{eSc} = \frac{(P_{eSc}/100)(R_{Ti})}{(1 - \frac{P'_{H2O}}{100} - \frac{P_{eSc}}{100})(R_{Ti})}$$

[6] $$X_{eSc} = \frac{P_{eSc}}{100 - P'_{H2O} - P_{eSc}}$$

4. <u>Outlet Sulfuric Acid Loading of Carbon from SO_2 Sorber</u>

Let X_V = acid loading, lbs. H_2SO_4/lb. C

X_{eSc} = residual sulfur loading of carbon, lbs. S/ lb. C

P_{H2O} = per cent moisture of carbon from SO_2 sorber, %

P_S = per cent sulfur of carbon from SO_2 sorber, %

W_T = lbs. material out of sorber, lbs./hr.

W_C = lbs. C/hr.

W_{eSc} = lbs. residual sulfur/hr.

W_V = lbs. acid/hr.

W_{H2O} = lbs. moisture/hr.

[1] $$W_c + W_{eSc} + W_v + W_{H2O} = W_T$$

[2] $$\frac{W_{eSc} + \frac{32}{98} W_v}{W_T} = \frac{P_{H2O}}{100}$$

[3] $$\frac{W_{H2O}}{W_T} = \frac{P_{H2O}}{100}$$

[4] $$\frac{W_{eSc}}{W_c} = X_{eSc}$$

[5] $$\frac{W_v}{W_c} = X_v$$

---

[5] $$W_v = X_v W_c$$

[4] $$W_{eSc} = X_{eSc} W_c$$

and [5] and [4] into [2].

[2] $$\frac{X_{eSc}W_c + 0.3265 X_v W_c}{W_T} \quad \frac{P_S}{100}$$

$$(X_{eSc} + 0.3265 X_v)W_c = \frac{P_S W_T}{100}$$

[6] $$W_c = \frac{P_S W_T}{100} \left(\frac{1}{X_{eSc} + 0.3265 X_v}\right)$$

and [6] into [4] and [5]

[7] $$W_v = \frac{P_S W_T X_v}{100} \left(\frac{1}{X_{eSc} + 0.3265 X_v}\right)$$

[8] $$W_{eSc} = \frac{P_S W_T X_{eSc}}{100} \left(\frac{1}{X_{eSc} + 0.3265 X_v}\right)$$

and from [3]

[3] $$W_{H2O} = \frac{P_{H2O}}{100} W_T$$

Substituting [6], [7], [8], and [3] into [1]

$$\left(\frac{P_S W_T}{100} + \frac{P_S W_T X_{eSc}}{100} + \frac{P_S W_T X_v}{100}\right)\left(\frac{1}{X_{eSc} + 0.3265\ X_v}\right) + \frac{P_{H2O}}{100} W_T = W_T$$

$$\frac{P_S}{100}(1 + X_{eSc} + X_v) = \left(1 - \frac{P_{H2O}}{100}\right)(X_{eSc} + 0.3265\ X_v)$$

$$= X_{eSc} + 0.3265\ X_v - \frac{P_{H2O}}{100} X_{eSc} - 0.3265\ X_v \frac{P_{H2O}}{100}$$

$$X_v\left(\frac{P_S}{100} - 0.3265 + 0.3265\ \frac{P_{H2O}}{100}\right) = -\frac{P_S}{100}(1 + X_{eSc}) + X_{eSc}\left(1 - \frac{P_{H2O}}{100}\right)$$

[9] $$X_v = \frac{\frac{P_S}{100}(1 + X_{eSc}) - X_{eSc}\left(1 - \frac{P_{H2O}}{100}\right)}{0.3265\left(1 - \frac{P_{H2O}}{100}\right) - \frac{P_S}{100}}$$

B. SULFURIC ACID CONVERTER

1. Outlet Sulfuric Acid Loading on Carbon

Let P_{vo} = per cent acid on carbon from unit, wt. %
P_S = per cent sulfur on carbon from unit, wt. %
P_{H_2O} = per cent water on carbon from unit, wt. %
W_T = total material from unit, lbs.
W_{vo} = sulfuric acid on carbon from unit, lbs.
W_S = elemental sulfur on carbon from unit, lbs.
W_c = weight of carbon on carbon from unit, lbs.
X_{vo} = H_2SO_4 loading on carbon from unit, lbs./lb. C
W_{H_2O} = weight of water on carbon from unit, lbs.

[1] $$W_S + W_c + W_{vo} + W_{H_2O} = W_T$$

[2] $$\frac{W_S + 0.3265\ W_{vo}}{W_T} = \frac{P_S}{100}$$

[3] $$\frac{W_{vo}}{W_T} = \frac{P_{vo}}{100}$$

[4] $$\frac{W_{H_2O}}{W_T} = \frac{P_{H_2O}}{100}$$

[5] $$\frac{W_{vo}}{W_c} = X_{vo}$$

from [3] and [4]

[3] $$W_{vo} = \frac{P_{vo}}{100} W_T$$

[4] $$W_{H_2O} = \frac{P_{H_2O}}{100} W_T$$

from [5]

$$W_c = \frac{W_{vo}}{X_{vo}}$$

and substituting [3] into [5]

[6] $$W_c = \frac{P_v}{100}\frac{W_T}{X_{vo}}$$

and [3] into [2]

[7] $$W_S + 0.3265\left(\frac{P_{vo}}{100}\right)W_T = \frac{P_S}{100}W_T$$

$$W_S = \left[\frac{P_S}{100} - 0.3265\left(\frac{P_{vo}}{100}\right)\right]W_T$$

and [3], [4], [6], and [7] into [1]

$$\left[\frac{P_S}{100} - 0.3265\left(\frac{P_v}{100}\right)\right]W_T + \left(\frac{P_v}{100\ X_{vo}}\right)W_T + \left(\frac{P_{vo}}{100}\right)W_T + \left(\frac{P_{H2O}}{100}\right)W_T = W_T$$

multiplied by X_{vo}

$$X_{vo}\left[\frac{P_S}{100} - 0.3265\left(\frac{P_{vo}}{100}\right) + \frac{P_{vo}}{100} + \frac{P_{H2O}}{100}\right] + \frac{P_v}{100} = X_{vo}$$

$$X_{vo}\left[1 - \frac{P_S}{100} - \frac{P_{H2O}}{100} - 0.6735\frac{P_{vo}}{100}\right] = \frac{P_v}{100}$$

[8] $$X_{vo} = \frac{P_v}{100 - P_S - P_{H2O} - 0.6735\ P_{vo}}$$

2. <u>Outlet Elemental Sulfur Loading on Carbon (from Acid Converter</u>

Let P_S = per cent sulfur on carbon from acid conversion, %

P_{vo} = per cent H_2SO_4 on carbon from acid conversion, %

P_{H2O} = per cent H_2O on carbon from acid conversion, %

X_{es} = elemental sulfur loading from acid conversion in acid converter, lbs. S/lb. C

X_{esc} = residual sulfur loading from acid conversion in acid converter, lbs. S/lb. C

W_T = total material from acid conversion, lbs.

W_{vo} = total H_2SO_4 from acid conversion, lbs.

W_{es} = total elemental sulfur from acid conversion, lbs.

W_c = total carbon from acid conversion, lbs.

W_{esc} = total residual sulfur from acid conversion, lbs.

W_{H2O} = total H_2O on carbon from acid conversion, lbs.

[1] $$W_{vo} + W_{es} + W_c + W_{H2O} + W_{esc} = W_T$$

[2] $$\frac{W_{es} + W_{esc} + 0.3265\ W_{vo}}{W_T} = \frac{P_S}{100}$$

[3] $$\frac{W_{vo}}{W_T} = \frac{P_{vo}}{100}$$

[4] $$\frac{W_{H2O}}{W_T} = \frac{P_{H2O}}{100}$$

[5] $$\frac{W_{esc}}{W_c} = X_{esc}$$

[6] $$\frac{W_{es}}{W_c} = X_{es}$$

from [3] and [4]

[3] $$W_{vo} = \frac{P_{vo}}{100} W_T$$

[4] $$W_{H2O} = \frac{P_{H2O}}{100} W_T$$

from [5] and [6]

[5] $$W_{esc} = X_{esc}\ W_c$$

[6] $$W_{es} = X_{es}\ W_c$$

[7] $$\Sigma = W_{esc} + W_{es} = (X_{esc} + X_{es})W_c$$

and [3] into [2], and [1]; also [7] and [4] into [2] and [1] give [8] and [9], respectively

[8] $$\frac{P_{vo}}{100} W_T + (X_{esc} + X_{es})W_c + W_c + (\frac{P_{H2O}}{100})W_T = W_T$$

[9] $$(X_{esc} + X_{es})W_c + 0.3265(\frac{P_{vo}}{100})W_T = \frac{P_S}{100} W_T$$

from [8]

$$W_c (1 + X_{esc} + X_{es}) = W_T[1 - \frac{P_{vo}}{100} - \frac{P_{H2O}}{100}]$$

[10] $$W_c = W_T \left[\frac{1 - \frac{P_{vo}}{100} \quad \frac{P_{H2O}}{100}}{1 + X_{esc} + X_{es}}\right]$$

and [10] into [9] gives

[11] $$W_T(X_{esc} + X_{es}) \left[\frac{1 - \frac{P_{vo}}{100} - \frac{P_{H2O}}{100}}{1 + X_{esc} + X_{es}}\right] + 0.3265 \frac{P_{vo}}{100} W_T = \frac{P_S}{100} W_T$$

multiply both sides by $(1 + X_{esc} + X_{es})(100)$

$$(X_{esc} + X_{es})(100 - P_{vo} - P_{H2O}) + 0.3265\ P_{vo}(1 + X_{esc} + X_{es}) = P_S(1 + X_{esc} + X_{es})$$

$$X_{esc}(100 - P_{vo} - P_{H2O}) + X_{es}(100 - P_{vo} - P_{H2O}) + 0.3265\ P_{vo}(1 + X_{esc})$$
$$+ 0.3265\ P_{vo}\ X_{es} = P_S(1 + X_{esc}) + P_S\ X_{es}$$

or

$$X_{es}\ [100 - P_{vo} - P_{H2O} + 0.3265\ P_{vo} - P_S] =$$
$$-X_{esc}(100 - P_{vo} - P_{H2O} + 0.3265\ P_{vo} - P_S) + P_S - 0.3265\ P_{vo}$$

then

[12] $$X_{es} = \left[\frac{P_S - 0.3265\ P_{vo}}{100 - P_S = P_{H2O} - 0.6735\ P_{vo}}\right] - X_{esc}$$

3. Hydrogen Sulfide Utilization in Acid Converter

Let P_{H_2S} = per cent H_2S utilization, %

[1] $$P_{H_2S} = \left(\frac{\text{Inlet } H_2S \text{ Conc.} - \text{Outlet } H_2S \text{ Conc.}}{\text{Inlet } H_2S \text{ Conc.}}\right)(100)$$

but 4 moles H_2O replace 3 moles H_2S; therefore, H_2S concentration has to be put on an inert free basis, therefore

[2] $$P_{H_2S} = 100\left[1 - \frac{\text{Outlet } H_2S \text{ Conc.}/\text{Outlet } N_2 \text{ Conc.}}{\text{Inlet } H_2S \text{ Conc.}/\text{Inlet } N_2 \text{ Conc.}}\right]$$

4. Acid Conversion to Elemental Sulfur in Acid Converter

Let P_{vc} = H_2SO_4 conversion to elemental sulfur, %

X_{eso} = elemental sulfur on outlet carbon previously calculated under B.2, lbs. S/lb. C

X_{vi} = sulfuric acid on inlet carbon previously calculated under A.4, lbs. H_2SO_4/lb. C.

From stoichiometry four moles of sulfur are generated for every mole of H_2SO_4;

$$H_2SO_4 + 3\ H_2S \longrightarrow 4\ S + 4\ H_2O$$

therefore,

[1] $$P_{vc} = 100\left[\frac{\text{Elemental S Formed}}{\text{Elemental S Stoichiometrically Possible}}\right]$$

$$= 100\left[\frac{X_{eso}\ \text{lbs. S/lb. C}}{X_{vi}\ (\#\text{acid} / \#\text{C})\left(\frac{\text{mole acid}}{98\ \#\ \text{acid}}\right)\left(\frac{4\ \text{moles S}}{\text{mole acid}}\right)\left(\frac{32\ \#\ \text{S}}{\text{mole S}}\right)}\right]$$

[2] $$P_{vc} = 100\left[\frac{98}{132}\right]\left[\frac{X_{eso}}{X_{vi}}\right]$$

5. SO_2 Breakthrough from Acid Converter

Let Z_{SO_2} = SO_2 evolved from acid converter, moles SO_2/mole H_2SO_4

X_{vi} = H_2SO_4 on carbon from SO_2 sorber, lbs. H_2SO_4/lb. C

R_T = material rate measured into SO_2 sorber, lbs./hr.

$(P_S)_{KF}$ = per cent sulfur on carbon into SO_2 sorber, %

$(P_{H_2O})_{KF}$ = per cent H_2O on carbon into SO_2 sorber, %

R_c = carbon rate into SO_2 sorber, lbs. C/hr.

q_{N_2} = nitrogen flow rate into acid converter, CFH @ 70°F

Y_{SO_2} = SO_2 concentration in gas from acid converter, volume fraction

Y_{N_2} = N_2 concentration in gas from acid converter, volume fraction

[1] $$R_c = R_T \left[1 - \frac{(P_S)_{KF}}{100} - \frac{(P_{H_2O})_{KF}}{100}\right]$$

[2] $$Z_{SO_2} = \frac{\text{Moles } SO_2 \text{ Evolved in Acid Converter/Hr.}}{\text{Moles Acid Sorbed in } SO_2 \text{ Sorber/Hr.}}$$

[3] $$\frac{\text{Moles } SO_2 \text{ Evolved}}{\text{Hr.}} = q_{N_2}\left(\frac{ft.^3\ N_2}{hr.}\right)\left(\frac{Y_{SO_2}}{Y_{N_2}}\right)\left(\frac{ft.^3\ SO_2/ft.^3\ Gas}{ft.^3\ N_2/ft.^3\ Gas}\right)\left(\frac{\text{mole acid}}{386\ ft.^3\ SO_2}\right)$$

$$= \frac{(Y_{SO_2}\ q_{N_2})}{(386\ Y_{N_2})}$$

[4] $$\text{Moles Acid/Hr.} = X_{vi}\left(\frac{\text{lb. acid}}{\text{lb. C}}\right) R_c \frac{\text{lb. C}}{\text{hr.}} \left(\frac{\text{mole acid}}{98 \text{ lbs. acid}}\right)$$

$$= X_v\ R_c/98$$

Substituting [1] into [4], then [4] and [3] into [2]

[5] $$Z_{SO_2} = \frac{0.2539\ (q_{N_2})(Y_{SO_2}/Y_{N_2})}{X_{vi}\ (R_T)\left[1 - \frac{(P_S)_{KF}}{100} - \frac{(P_{H_2O})_{KF}}{100}\right]}$$

6. H_2S Breakthrough from Acid Converter

Let Z_{H_2S} = H_2S breakthrough from acid converter, moles H_2S/mole H_2SO_4

Other variables likewise as under B.5 except
Y_{H_2S} = H_2S concentration in gas from acid converter, volume %.

Therefore by a derivation the same as in B.5, except H_2S replaces SO_2 leads to

[1] $$Z_{H_2S} = \frac{0.2539\ (q_{N_2})(Y_{H_2S}/Y_{N_2})}{X_{vi}\ (RT)\ [1 - \frac{(PS)_{KF}}{100} - \frac{(PS)_{KF}}{100}]}$$

C. H_2S GENERATOR/SULFUR STRIPPER

1. Inlet S Loading on Carbon

See Section B.2.

2. Inlet Acid Loading on Carbon

See Section B.1.

3. Outlet Sulfur Loading on Carbon

See Section A.3.

4. Hydrogen Utilization

Let P_{H_2} = per cent H_2 utilization, %

[1] $$P_{H_2} = [\frac{H_2 \text{ into Unit} - H_2 \text{ Out of Unit}}{H_2 \text{ into Unit}}](100)$$

[2] $$H_2 \text{ into Unit} = \frac{H_2 \text{ Conc. In}}{N_2 \text{ Conc. In}} = \frac{(Y_{H_2})_i}{(Y_{N_2})_i}$$

[3] $$H_2 \text{ Out of Unit} = \frac{H_2 \text{ Conc. Out}}{N_2 \text{ Conc. Out}} = \frac{(Y_{H_2})_o}{(Y_{N_2})_o}$$

Substituting [2] and [3] into [1] and rearranging

[4] $$P_{H_2} = 100\left[1 - \frac{(Y_{H_2})_o/(Y_{N_2})_o}{(Y_{H_2})_i/(Y_{N_2})_i}\right]$$

5. <u>Hydrogen Conversion to Hydrogen Sulfide</u>

Let $(P_{H_2S})_u$ = per cent hydrogen to hydrogen sulfide, %

$(q_{N_2})_i$ = inlet N_2 flow rate, CFH @ 70°F

$(q_{N_2})_o$ = outlet N_2 flow rate, CFH @ 70°F

$(Y_{H_2})_i$ = H_2 concentration in gas to regenerator, volume fraction

$(Y_{N_2})_i$ = N_2 concentration in gas to regenerator, volume fraction

$(Y_{H_2S})_o$ = H_2S concentration out gas to regenerator, volume fraction

$(Y_{N_2})_o$ = N_2 concentration out gas to regenerator, volume fraction.

[1] $$(P_{H_2S})_u = 100\left(\frac{H_2 \text{ in Outlet Gas as } H_2S/\text{Hr.}}{H_2 \text{ in Inlet Gas/Hr.}}\right)$$

[2] $$H_2 \text{ as } H_2S \text{ in Outlet Gas/Hr.} = \left(\frac{H_2S \text{ Conc.}}{N_2 \text{ Conc.}}\right)(N_2 \text{ Flow Rate In})$$

$$= \frac{(Y_{H_2S})_o}{(Y_{N_2})_o}(q_{N_2})_o$$

[3] $$H_2 \text{ in Inlet Gas} = \left(\frac{H_2 \text{ Conc.}}{N_2 \text{ Conc.}}\right)(N_2 \text{ Flow Rate In})$$

$$= \frac{(Y_{H_2})_i}{(Y_{N_2})_i}(q_{N_2})_i$$

Substituting [2] and [3] into [1]

[4] $$(P_{H_2S})_u = 100\left[\frac{(Y_{H_2S})_o/(Y_{N_2})_o}{(Y_{H_2})_i/(Y_{N_2})_i}\right]\left[\frac{2\ o}{(q_{N_2})_i}\right]$$

6. Hydrogen Requirement for Acid Conversion

Let α_{H_2} = H_2 requirement for H_2SO_4 conversion to e elemental sulfur, moles H_2/mole SO_2 recovered from flue gas

[1] $$\text{Moles } SO_2 \text{ Recovered from Flue Gas} = \text{Moles } H_2SO_4 \text{ Sorbed on Activated Carbon}$$

[2] $$\alpha_{H_2} = \frac{\text{Moles } H_2 \text{ Fed to S Stripper-}H_2S \text{ Generator/Hr.}}{\text{Moles } H_2SO_4 \text{ Sorbed on Activated Carbon/Hr.}}$$

[3] $$\text{Moles } H_2 \text{ Fed/Hr.} = (q_{N_2})_i \frac{\text{ft.}^3\ N_2}{\text{hr.}} \left(\frac{Y_{H_2}}{Y_{N_2}}\right) \frac{\text{ft.}^3\ H_2/\text{ft.}^3\ \text{Gas}}{\text{ft.}^3\ N_2/\text{ft.}^3\ \text{Gas}} \left(\frac{\text{mole } H_2}{386\ \text{ft.}^3\ H_2}\right)$$

$$= \frac{1}{386} \frac{(Y_{N_2})_i}{(Y_{N_2})_i} (q_{N_2})_i$$

[4] $$\text{Moles } H_2SO_4\text{/Hr.} = (X_v)_o \frac{\text{lbs. acid}}{\text{lb. C}} R_c \left(\frac{\text{lb. C}}{\text{hr.}}\right)\left(\frac{\text{mole acid}}{98\ \text{lbs. acid}}\right)$$

$$= (X_v)_o\ R_c/98$$

[5] $$R_c = (R_T)_{KF} \left[1 - \frac{(P_{H_2O})_{KF}}{100} - \frac{(P_S)_{KF}}{100}\right]$$

Substituting [5] into [4], then [3] and [4] into [2]

[6] $$\alpha_{H_2} = \frac{98}{386} \frac{(Y_{H_2})_i}{(Y_{N_2})_i} \frac{(q_{N_2})_i}{(X_v)_o} \left(\frac{1}{(R_T)_{KF}\left[1 - \frac{(P_{H_2O})_{KF}}{100} - \frac{(P_S)_{KF}}{100}\right]}\right)$$

where $(Y_{H_2})_i$ = H_2 concentration into S stripper/H_2S gen., vol. frac.

$(Y_{N_2})_i$ = N_2 concentration into S stripper/H_2S gen., vol. frac.

$(q_{N_2})_i$ = N_2 flow rate into S stripper/ H_2S gen., CFH @ 70°F

$(X_v)_o$ = H_2SO_4 loading in C from SO_2 sorber, lb. H_2SO_4/lb. C

(R_c) = carbon rate from SO_2 sorber, lbs. C/hr.

$(R_T)_{KF}$* = material rate at Kane feeder, lbs./hr.

$(P_{H_2O})_{KF}$ = H_2O conc. on carbon at Kane feeder, %

(P_S) = S conc. on carbon at Kane feeder, %

7. Carbon Burn-off

Let $(R_c)_{BO}$ = lb. carbon evolved as CO or CO_2/hr., lbs. C/hr.

[1] $$(R_c)_{BO} = \begin{array}{l}\text{Carbon Meas. as CO in Gas from S Stripper/}H_2S\text{ Gen.}\\ + \text{Carbon Meas. as CO in Gas from Acid Converter}\\ + \text{Carbon Meas. as }CO_2\text{ in Gas from S Stripper/}H_2S\text{ Gen.}\\ + \text{Carbon Meas. as }CO_2\text{ in Gas from Acid Converter}\end{array}$$

[2] $$(R_c)_{BO} = \left[\left(\frac{Y_{CO}}{Y_{N_2}}\right)\frac{q_{N_2}}{386}(12) + \left(\frac{Y_{CO_2}}{Y_{N_2}}\right)\left(\frac{Y_{N_2}}{386}\right)(12)\right]_{\text{S Strip.-}H_2S\text{ Gen. Outlet Gas}}$$

$$+ \left[\left(\frac{Y_{CO}}{Y_{N_2}}\right)\frac{q_{N_2}}{386}(12) + \left(\frac{Y_{CO_2}}{Y_{N_2}}\right)\left(\frac{Y_{N_2}}{386}\right)(12)\right]_{\text{Acid Conv. Outlet Gas}}$$

As it turned out there was no CO detected and the CO_2 from the S stripper/H_2S generator was equal to the CO_2 from the acid converter implying that all carbon burn-off occurred in the S stripper/H_2S generator and Equation [2] reduces to

$$(R_c)_{BO} = \left[\left(\frac{Y_{CO_2}}{Y_{N_2}}\right)\left(\frac{q_{N_2}}{386}\right)(12)\right]_{\text{S Strip.-}H_2S\text{ Gen. Outlet Gas}}$$

---

*In calculating the carbon rate from this material rate, the attrition rate is neglected, but the attrition rate was less than one per cent of the total material rate.

where Y_{CO_2} = CO_2 conc. in S stripper/H_2S gen. outlet gas, volume fraction

Y_{N_2} = N_2 conc. in S stripper/H_2S gen. outlet gas, volume fraction

q_{N_2} = N_2 flow rate from S stripper/H_2S gen., CFH @ 70°F

D. SULFUR CONDENSER

1. Sulfur Recovery

Let $(P_{SR})_S$ = per cent S recovery, % stripper

$(P_{SR})_{SS}$ = per cent S recovery, % of SO_2 recovered from flue gas based on elemental S recovered

$(P_{SR})'_{SS}$ = per cent S recovery, % of SO_2 recovered from flue gas based on gas analysis of gas from acid converter

a. Sulfur Recovery - % Sulfur Stripper

[1] $$(P_{SR})_S = 100 \left[\frac{\text{Sulfur Recovered}}{\text{S In on Carbon} - \text{S Out on Carbon}}\right]$$

[2] S into S Stripper-H_2S Generator on Carbon = S in as S + S in as Acid

$$= \left[X_{es} + X_{esc} + \frac{32}{98} X_{vo}\right] R_c \frac{\text{lb. S}}{\text{hr.}}$$

[3] S Out S Stripper-H_2S Generator on Carbon = $X_{esc} R_c \frac{\text{lb. S}}{\text{hr.}}$

[4] S Recovered = R_{es}, a measured value, lbs. S/hr.

[2], [3] and [4], into [1]

[4] $$P_{SR} = 100 \frac{R_{es}}{\left[X_{es} + X_{esc} + \frac{32}{98} X_{vo} - X_{esc}\right] R_c}$$

but $R_c = (R_T)_{KF} \left[1 - \frac{(P_{H_2O})_{KF}}{100} - \frac{(P_S)_{KF}}{100}\right]$

[4] $$P_{SR} = 100 \frac{R_{es}}{\left[X_{es} + \frac{32\ X_{vo}}{98}\right](R_T)_{KF} \left[1 - \frac{(P_{H_2O})}{100} - \frac{(P_S)_{KF}}{100}\right]}$$

where X_{es} = S loading on C, see Section B.2

X_{esc} = residual S loading on C, see Section A.3

X_{vo} = inlet acid loading on C to S strip.-H_2S gen., see Section B.1

b. <u>Sulfur Recovery, % of SO_2 Recovered Based on S Collected</u>

[1] $$(P_{SR})_{SS} = 100 \left[\frac{\text{\# S Recovered in S Condenser/Hr.}}{\text{\# S Recovered as } SO_2 \text{ in } SO_2 \text{ Sorber/Hr.}}\right]$$

[2] Lbs. S/Hr. = R_{es} (measured quantity)

[3] $$\text{Lbs. S Recovered as } SO_2\text{/Hr.} = \frac{32(X_v)_o}{98} (R_T)_{KF} \left[1 - \frac{(P_{H_2O})_{KF}}{100} \quad \frac{(P_S)_{KF}}{100}\right.$$

Substituting [2] and [3] into [1]

[4] $$(P_{SR})_{SS} = 100 \frac{98\ R_{es}}{32(X_v)_o\ (R_T)_{KF} \left[1 - \frac{(P_{H_2O})_{KF}}{100} - \frac{(P_S)_{KF}}{100}\right]}$$

where $(X_v)_o$ = acid loading on C from SO_2 sorber, see Section A.4

$(R_T)_{KF}$ = material rate measured at Kane feeder, lbs./hr.

$(P_{H_2O})_{KF}$ = % H_2O on C measured at Kane feeder, %

$(P_S)_{KF}$ = % S on C measured at Kane feeder, %.

c. <u>Sulfur Recovery, % of SO_2 Recovered Based on S Values in Outlet Gas of Acid Converter</u>

[1] $$(P_{SR})'_{SS} = \frac{100\left[\left(\begin{array}{c}\#\text{ S Recov. as } SO_2 \text{ in}\\ \text{Sorber/Hr.}\end{array}\right) - \left(\begin{array}{c}\#\text{ S as } H_2S + SO_2 \text{ in Outlet}\\ \text{Gas of Acid Conv./Hr.}\end{array}\right)\right]}{\#\text{ S Recov. as } SO_2 \text{ in } SO_2 \text{ Sorber/Hr.}}$$

[2] $$\begin{array}{c}\#\text{ S Recov. as } SO_2\\ \text{in } SO_2 \text{ Sorber/Hr.}\end{array} = \frac{32}{98}(X_v)_o\ (R_T)_{KF}\ [1 - \frac{(P_S)_{KF}}{100} - \frac{(P_{H_2O})_{KF}}{100}]$$

[3] $$\begin{array}{c}\#\text{ S as } H_2S\\ + SO_2/\text{Hr.}\end{array} = (q_{N_2})_o \left[\frac{(Y_{H_2S})_o - (Y_{SO_2})_o}{(Y_{N_2})_o}\right] \frac{\text{ft.}^3}{\text{hr.}} \left(\frac{\text{moles/ft.}^3}{386}\right)\left(\frac{32\ \#\ S}{\text{mole}}\right)$$

$$= \frac{32}{386}\left[\frac{(Y_{H_2S})_o - (Y_{SO_2})_o}{(Y_{N_2})_o}\right](q_{N_2})_o$$

Substituting [2] and [3] into [1]

[4] $$(P_{SR})'_{SS} = 100\ \ 1 - \frac{98\ [(Y_{H_2S})_o + (Y_{SO_2})_o](q_{N_2})_o}{386\ (Y_{N_2})_o\ (X_v)_o\ (R_T)_{KF}\ [1 - \frac{(P_S)_{KF}}{100} - \frac{(P_{H_2O})_{KF}}{100}]}$$

where $(Y_{H_2S})_o$ = H_2S conc. in outlet gas from acid converter, vol. frac.

$(Y_{SO_2})_o$ = SO_2 conc. in outlet gas from acid converter, vol. frac.

$(Y_{N_2})_o$ = N_2 conc. in outlet gas from acid converter, vol. frac.

$(q_{N_2})_o$ = N_2 flow rate from acid converter, CFH @ 70°F

$(X_v)_o$ = acid loading on C from SO_2 sorber, see Section A.4

$(R_T)_{KF}$ = material rate measured at Kane feeder, lbs./hr.

$(P_S)_{KF}$ = % S on C at Kane Feeder, %

$(P_{H_2O})_{KF}$ = % H_2O on C at Kane Feeder, %.

APPENDIX A-20-2

DERIVATION OF MATHEMATICAL EXPRESSIONS FOR CALCULATION OF RATE OF REACTION TO FORM SULFUR - DIFFERENTIAL RATE STUDIES IN BATCH FLUID BED REACTOR

It is assumed that the overall rate of reaction is

$$3\ H_2S + H_2SO_4 \longrightarrow 4\ S + 4\ H_2O$$

y_{W_O} = Vol. Frac. H_2O Out
y_{S_O} = Vol. Frac. SO_2 Out
y_{HS_O} = Vol. Frac. H_2S Out
q_I = Flow Rate of Inert Gas, SCFH

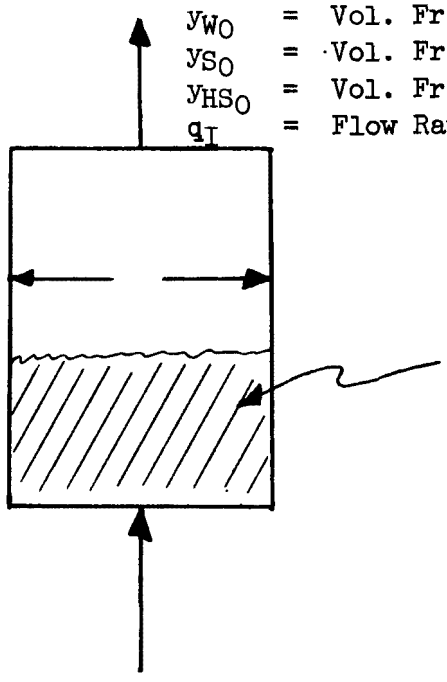

V = Volume of Carbon (Settled Bed, ft.^{3})
X_{eSc} = lb. Residual Sulfur/lb. C
P_{Si} = Initial % Sulfur
P_S = % Sulfur at Any Time t
X_{Vi} = Initial lb. H_2SO_4/lb. C
X_V = lb. H_2SO_4/lb. C at Time t

q_I = Flow Rate of Inert Gas
y_{HS_i} = Vol. Frac. H_2S In
y_{W_i} = Vol. Frac. H_2O In
y_{S_i} = Vol. Frac. SO_2 In

It will be assumed that the reactor is differential with respect to the gas. With this assumption the sulfur analysis of the carbon will be used as a basis of following the reaction of H_2S with H_2SO_4 to form elemental sulfur which remains sorbed on the carbon.

If the reactor can be taken to be a single ideal batch reactor if follows that

[C1] (Rate of Loss of A Due to Chem. Rxn) = (Rate of Decrease of Reactant A within Reactor)

[C2] $$(-r_V)\cdot V = N_{V_o}\frac{dF_V}{dt}$$

[C3] $$dF_C = \frac{V}{N_{V_o}}(-r_V)\,dt$$

[C4] $$\int_{F_{C_j}}^{F_{C_{j+1}}} \frac{dF_C}{(-r_A)} = \frac{V}{N_{A_o}}\int_{t_j}^{t_{j+1}} dt$$

and then if the time period is sufficiently small the average rate, $(-r_A)_{avg}$, can be taken at the average conversion $\left(\frac{F_{C_{j+1}} + F_{C_j}}{2}\right)$.

[C5] $$\frac{F_{C_{j+1}} - F_{C_j}}{(-r_V)_{avg}} = \frac{V}{N_{A_o}}(t_{j+1} - t_j)$$

[C6] $$\boxed{(-r_V)_{avg} = \frac{N_{A_o}}{V}\frac{(F_{C_{j+1}} - F_{C_j})}{(t_{j+1} - t_j)}}$$

where V = Volume of reactor, ft.^{3}
N_{V_o} = Initial charge of H_2SO_4, lb. mole
t_j = Time at j^{th} minute
F_{C_j} = Fraction conversion of H_2SO_4 at j^{th} min.

but $F_C = \frac{N_{V_o} - N_V}{N_{V_o}}$

Bases: 1 lb. C

[C7] $$F_C = \frac{X_{vi} - X_v}{X_{vi}}$$

at t_j, $F_{C_j} = \frac{X_{Vi} - (X_V)_j}{X_{Vi}}$ and at t_{j+1}, $F_{C_{j+1}} = \frac{X_{Vi} - (X_V)_{j+1}}{X_{Vi}}$

[C8] $$F_{C_{j+1}} - F_{C_i} = \frac{(X_V)_j - (X_V)_{j+1}}{X_{Vi}}$$

and

[C9] $$(-r_V)_{avg} = \frac{N_{V_o}}{V} \frac{(X_V)_j - (X_V)_{j+1}}{X_{Vi}\ (t_{j+1} - t_j)}$$

[C10] $$N_{V_o} = X_{Vi}\left(\frac{1}{98}\right)(\ \ )(V)$$
$$= X_{Vi}\ V\ \left(\overline{98}\right)$$

[C11] $$\boxed{(-r_V)_{avg} = \overline{98}\ \left(\frac{(X_V)_j - (X_V)_{j+1}}{t_{j+1} - t_j}\right)}$$, lb. mole acid/ft.^{3} C/hr.

where = density of carbon, lbs./ft.^{3}

or

[C12] $$(-r_V)_{avg} = \frac{(X_V)_j - (X_V)_{j+1}}{t_{j+1} - t_j}$$, lbs. acid/lb. C/min.

where the rate is assigned the average acid loading over the time period t_j to t_{j+1}

[C13] $$\frac{(X_V)_j + (X_V)_{j+1}}{2},$$

and the average elemental sulfur loading X_{es} over the time period t_j to t_{j+1}

[C14] $$\frac{(X_{es})_j + (X_{es})_{j+1}}{2}$$

A similar derication holds for the rate of sulfur formation and assigned the same average properties of sulfur loading and acid loadings.

[C15] $$(r_s) \text{ are } = \frac{(X_s)_j - (X_s)_{j+1}}{t_{j+1} - t_j}$$

The unknowns X_V and X_S are calculated from the measured experimental values depending on whether it is assumed that no SO_2 is evolved or some quantity of SO_2 is evolved. The derivation of the resulting relationships for each assumption is given below.

Assuming No SO_2 Evolved

If this assumption is made then only one unknown needs to be determined with time. In this case the total per cent sulfur is measured as a function of time.

Let X = lb. C = 1

X_V = lb. H_2SO_4

X_{eSc} = lb. residual sulfur

X_{es} = lb. elemental sulfur.

Then Equations [C16] and [C17] need to be solved for X_V and X_{es}

[C16] $$\frac{X_V(\frac{32}{98}) + X_{eSc} + X_{es}}{1 + X_{eSc} + X_V + X_{es}} = \frac{\% S}{100}$$

[C17] $$X_V = X_{Vi}(1 - F_C)$$

since $F_{Vo} = 1$

$P_S' = P_S/100$

[C18] $$\frac{\frac{32}{98} X_{Vi} (1 - F_C) + X_{eSc} + X_{es}}{1 + X_{eSc} + X_{Vi} (1 - F_C) + X_{es}} = \frac{P_S}{100}$$

[C19] $$X_{es} = \frac{P_s + X_{esc}(P_s - 100) + X_{vi}(P_s - 32.65) + F_c X_{vi}(32.65 - P_s)}{100 - P_s}$$

[C20] $$X_{es} = \frac{P_s + X_{esc}(P_s - 100) - X_{vi}(1-F_c)\,[32.65 - P_s]}{100 - P_s}$$

[C21] $$X_{vi} = \frac{P_{si}(1 + X_{esc}) - 100\,X_{esc}}{32.65 - P_{si}}$$

also

[C22] $$X_{es} = 4(F_c)X_{vi}(\frac{32}{98}) = 1.306\,X_{vi}\,F_c$$

[C23] $$1.306\,X_{vi}\,F_c = \frac{P_s + X_{esc}(P_s - 100) - X_{vi}(1 - F_c)(32.65 - P_s)}{100 - P_s}$$

[C24] $$F_c = 1 - \frac{P_s + X_{esc}(P_s - 100) + X_{vi}(P_s - 32.65)}{X_{vi}\,[\,97.95 - .306\,P_s\,]}$$

Therefore equations [C20] and [C21] provide the relationship between unknowns and measurements needed to calculate the rate of reaction by Equation [C12].

Assuming SO_2 Evolved - 1000°F H_2SO_4 Analysis

If SO_2 is evolved the two unkowns need to be determined, in this case the total per cent sulfur and sulfuric acid content on the carbon as a function of tiem. The SO_2 being evolved also suggests a two step mechanism for sulfur generation

[C25] $H_2SO_4 + H_2S \quad S + SO_2 + 2H_2O$

[C26] $2H_2S + SO_2 \quad 3S + 2H_2O$

to give the overall reaction

[C27] $H_2SO_4 + 3H_2S \quad 4S + 4H_2O$

Let W_c = lb C = 1 as a basis
W_v = lb H_2SO_4 on carbon
W_{SO_2} = lb SO_2 formed by reaction [C25]
W_{esc} = lb residual sulfur on carbon
W_S = lb elemental sulfur
F = fraction of SO_2 formed in reaction [C25] that reacts by reaction [C26]

Then

[C28] Moles of SO_2 evolved = Moles SO_2 formed by reaction [C25] not reacting by reaction [C26]

$$= (1 - F)\frac{W_{SO_2}}{64}$$

[C29] Moles of Elemental Sulfur formed = Moles formed by reaction [C25] + moles formed by reaction [C26]

$$= \left(\frac{W_{SO_2}}{64}\right) + 3F\left(\frac{W_{SO_2}}{64}\right)$$

[C30] Moles H_2SO_4 left on carbon = (Initial moles H_2SO_4 on carbon) - (Moles H_2SO_4 converted to SO_2 in rxn. [C25])

$$= \frac{X_{vi}}{98} - \frac{W_{SO_2}}{64}$$

The two experimental measurements are the total sulfur analysis and the SO_2 analysis as mentioned above. The total sulfur analysis involves burning of a known weight of sample of carbon containing sulfur in O_2 at 2600°F to form SO_2 which is sorbed in a H_2O_2 solution. The solution is titrated with a known normality of NaOH using methyl red as an indicator. The total sulfur content of the carbon can then be calculated. By definition the weight fraction of sulfur, $P_S/100$, is given as

$$[C31]\quad \text{weight fraction of sulfur} = \frac{\text{lb sulfur as residual sulfur} + \text{lb sulfur as } H_2SO_4 + \text{lb sulfur elemental S}}{\text{lb C} + \text{lbs S as residual sulfur} + \text{lbs } H_2SO_4 + \text{lb sulfur as elemental S}}$$

$$= \frac{\left(\frac{P_{esc}}{100 - P_{esc}}\right) + 32\left(\frac{X_{vi}}{98} - \frac{W_{SO_2}}{64}\right) + 32\left[\frac{W_{SO_2}}{64} + 3F\left(\frac{W_{SO_2}}{64}\right)\right]}{1 + \left(\frac{P_{esc}}{100 - P_{esc}}\right) + 98\left(\frac{X_{vi}}{98} - \frac{W_{SO_2}}{64}\right) + 32\left[\frac{W_{SO_2}}{64} + 3F\left(\frac{W_{SO_2}}{64}\right)\right]}$$

The SO_2 analysis of the carbon involves purging a known weight of carbon with He at 1000°F. If there is only sulfuric acid on the carbon then SO_2 is formed by reaction [C32]

$$[C32]\quad H_2SO_4 + C \qquad SO_2 + CO + H_2O$$

If, however, there is H_2SO_4 and elemental sulfur on the carbon then SO_2 is formed by reaction [C32] or [C33] or both.

$$[C33]\quad 2H_2SO_4 + S \qquad 3SO_2 + 2H_2O$$

For the present derivation it will be assumed that the H_2SO_4 will react with all elemental sulfur preferentially. This now means that there are two distinct regions one for when

$$[C34]\quad \text{Moles of acid on carbon} < 2 \times \text{Moles of elemental sulfur on carbon}$$

the other for

[C35] $\text{Moles of acid on carbon} \geq 2 \times \text{Moles of Elemental sulfur on carbon}$

For the conditions given by Equation [C34] then

[C36] $\text{Moles } H_2SO_4 \text{ reacted by reaction [C33]} = 2 \times \text{Moles of Elemental sulfur formed}$

$$= 2\,\frac{W_{SO_2}}{64}\,[1 + 3F]$$

[C37] $\text{Moles } H_2SO_4 \text{ reacted by reaction [C32]} = \text{Moles } H_2SO_4 \text{ left} - \text{moles } H_2SO_4 \text{ reacted by reaction [C33]}$

$$= \left(\frac{X_{vi}}{98} - \frac{W_{SO_2}}{64}\right) - 2\left(\frac{W_{SO_2}}{64}\right)(1 + 3F)$$

Then the SO_2 evolved by reactions [C32] and [C33] is collected in a H_2O_2 solution and titrated with a known normality of NaOH using methyl red as an indicator. Then the SO_2 analysis is given as

[C38] $$\text{LB. } SO_2/\text{lb C} = \left[\frac{\text{lb } SO_2 \text{ evolved by reaction [C32]} + \text{lb } SO_2 \text{ evolved by reaction [C33]}}{\text{lb C} = 1}\right]$$

$$X_{SO_2} = 64\left[\left(\frac{W_{SO_2}}{64} + 3F\,\frac{W_{SO_2}}{64}\right) + \left(\frac{X_{vi}}{98} - \frac{W_{SO_2}}{64}\right)\right]$$

Then solving Equations [C31] and [C38] for W_{SO_2} and F yields:

[C39] $$F = \frac{X_{SO_2} - \left(\frac{64}{98}\right) X_{vi}}{3\,W_{SO_2}}$$

and

[C40] $$W_{SO_2} = \frac{\frac{P_s}{100}\left(1 + \frac{66\,X_{vi}}{98}\right) - \frac{X_{SO_2}}{2}\left(1 - \frac{P_s}{100}\right) - \left(\frac{P_{esc}}{100 - P_{esc}}\right)\left(1 - \frac{P_s}{100}\right)}{\left(\frac{66}{64}\right)\left(\frac{P_s}{100}\right)}$$

Then acid left at time $t_j + 1$ is

$$[C41] \quad (X_V)_{j+1} = X_{vi} - 98\left[\frac{\frac{P_s}{100}\left(1+\frac{66X_{vi}}{98}\right) - \frac{X_{SO_2}}{2}\left(1-\frac{P_s}{100}\right) - \left(\frac{P_{esc}}{100-P_{sec}}\right)\left(1-\frac{P_s}{100}\right)}{66\left(\frac{P_s}{100}\right)}\right]$$

and the lbs of sulfur formed at that time is

$$[C42] \quad X_{es} = \frac{\frac{P_s}{100}\left(1+\frac{66X_{vi}}{98}\right) - \frac{X_{SO_2}}{2}\left(1-\frac{P_s}{100}\right) - \left(\frac{P_{esc}}{100-P_{esc}}\right)\left(1-\frac{P_s}{100}\right)}{0.66\ P_s}$$

$$+ \frac{X_{SO_2}}{64} - \frac{X_{vi}}{98} \quad (32)$$

For the conditions given by Equation [C35] then all the H_2SO_4 reacts with the sulfur as assumed and the SO_2 analysis is given as

$$[C43] \quad \text{lb } SO_2/\text{lb C} = \left(\frac{\text{lb } SO_2 \text{ evolved by reaction [C33]}}{\text{lb C} = 1}\right) = \left(\frac{3}{2}\right)(64)\left[\frac{X_{vi}}{98} - \frac{W_{SO_2}}{64}\right]$$

Then solving Equations [C31] and [C43] for W_{SO_2} and F yields:

$$[C44] \quad W_{SO_2} = 64\,\frac{X_{vi}}{98} - \frac{X_{SO_2}}{96}$$

and

$$[C45] \quad F = \frac{\frac{P_s}{100}\left[1+X_{esc}+\frac{66}{98}X_{SO_2}+\frac{32}{98}X_{vi}\right] - \left[X_{esc}+\frac{32}{98}X_{vi}\right]}{96\left[\frac{X_{vi}}{98} - \frac{X_{SO_2}}{96}\right]\left[1 - \frac{P_s}{100}\right]}$$

where $X_{esc} = \dfrac{P_{esc}}{100 - P_{esc}}$

Then sulfuric acid left on carbon at $t_j + 1$ is

$$[C46] \quad (X_v)_{j+1} = \frac{98}{96} X_{SO_2}$$

and lbs of elemental sulfur formed at that time is

$$[C47] \quad X_{es} = \left[\frac{X_{vi}}{98} - \frac{X_{SO_2}}{96}\right] + 3 \left[\frac{X_{vi}}{98} - \frac{X_{SO_2}}{96}\right] F$$

$$[C48] \quad X_{es} = 32 \left[\frac{X_{vi}}{98} - \frac{X_{SO_2}}{96}\right] + \frac{\frac{P_s}{100}\left[1 + X_{esc} + \frac{66}{98} X_{SO_2} + \frac{32}{98} X_{vi}\right] - \left[X_{esc} + \frac{32}{98} X_{vi}\right]}{32 \left[1 - \frac{P_s}{100}\right]}$$

Therefore Equations [C41] and [C42] or [C46] and [C48] provide the relationship between unknown and measured quantities needed to calculate the rate of reaction by Equation [C12].

Assuming SO_2 Evolved - Acid Leaching Analysis

If SO_2 is evolved during the differential sulfur generation experiments then two unknowns need to be determined, the total H_2SO_4 and total elemental sulfur on the carbon.

Instead of the carbon analyses used in the previous sections the acid on the carbon is leached in boiling water and the solution is titrated with a known normality of NaOH using methyl red as an indicator. The remaining sample of carbon plus elemental sulfur is dried, weighed, and analyzed at 2600°F in O_2 for sulfur content as described previously. The data then allow the amount of acid, amount of elemental sulfur, and amount of carbon to be determined, that is X_v and X_s are given directly.

Beside the rate of acid decomposition, Equation [C12], the rate of elemental sulfur formation can also be determined as given by Equation [C49].

$$[C49] \quad (r_s)_{ave} = \frac{(X_s)_j - (X_s)_{j+1}}{t_{j+1} - t_j} \quad , \text{ lbs S/lb C - min}$$

Equation [C12] is the reaction rate of reaction [C25] and Equation [C49] is the overall reaction [C27] rate. The reaction rate of reaction [C26] can thus be also determined.

Based on the above nomenclature the following derivation is made relating the unknowns to experimentally measured quantities:

Let W_v = gms acid

W_{es} = gms elemental sulfur

W_{esc} = gms residual sulfur

W_c = gms carbon

W_{H_2O} = gms H_2O

and total sample weight = W

[C50] $W = W_v + W_{es} + W_{esc} + W_c + W_{H_2O}$

By acid leaching and NaOH titration get, W_v,

[C51] $W_v = (x \text{ ml solution})\left(\frac{0.1 \text{ moles NaOH}}{1000 \text{ ml of soln}}\right)\left(\frac{2 \text{ moles acid}}{\text{mole NaOH}}\right)\left(\frac{98 \text{ gms acid}}{\text{mole acid}}\right)$

$= 0.0196\ x$, gms acid

By drying of sample get, $W_{es} + W_{esc} + W_c = y$ = weight of sample less acid and H_2O

[C52] $y = W_{es} + W_{esc} + W_c$

By total sulfur analysis of this sample will get, P_s

[C53] $\frac{P_s}{100} = \frac{W_{es} + W_{esc}}{y}$

By separate analysis earlier of the virgin carbon the residual sulfur has been determined, P_{esc}

[C54] $\frac{P_{esc}}{100} = \frac{W_{esc}}{W_{esc} + W_c} = X_{esc}$, $\frac{\text{lb residual S}}{\text{lb carbon}} = \frac{P_{esc}}{100 - P_{esc}}$

or $X_{esc} = W_{esc}/W_c = \frac{P_{esc}}{100 - P_{esc}}$

Therefore have W_y in terms of measured a quantity, x, the ml of solution of 0.1N NaOH in terms of measured quantities. This involved solving Equations [C52], [C53], and [C54]

$$[C52]\quad y = W_{es} + W_{esc} + W_c$$

$$[C53]\quad \frac{P_s}{100} = \frac{W_{es} + W_{esc}}{W_{es} + W_{esc} + W_c}$$

$$[C54]\quad \frac{W_{esc}}{W_c} = \frac{P_{esc}}{100 - P_{esc}} = W_{esc} = \left(\frac{P_{esc}}{100 - P_{esc}}\right) W_c$$

Equation [C52] into [C53] gives

$$[C55]\quad \frac{P_s}{100} = \frac{W_{es} + W_{esc}}{y}$$

$$[C56]\quad W_{es} + W_{esc} = \left(\frac{P_s}{100}\right) y$$

and [C52] into [C54] gives

$$[C57]\quad W_{esc} = \left(\frac{P_{esc}}{100 - P_{esc}}\right)(y - W_{es} - W_{esc})$$

$$[C58]\quad W_{esc} = \left(\frac{P_{esc}}{100 - P_{esc}}\right) y - \left(\frac{P_{esc}}{100 - P_{esc}}\right) W_{es} - \left(\frac{P_{esc}}{100 - P_{esc}}\right) W_{esc}$$

$$[C59]\quad W_{esc}\left[1 + \frac{P_{esc}}{100 - P_{esc}}\right] = \left(\frac{P_{esc}}{100 - P_{esc}}\right) y - \left(\frac{P_{esc}}{100 - P_{esc}}\right) W_{es} - \left(\frac{P_{esc}}{100 - P_{esc}}\right) W_{esc}$$

$$[C60]\quad W_{esc}\left[\frac{100}{100 - P_{esc}}\right] = \left(\frac{P_{esc}}{100 - P_{esc}}\right)(y - W_{es})$$

$$[C61]\ W_{esc} = \frac{\left(\frac{P_{esc}}{100 - P_{esc}}\right)(y - W_{es})}{\left(\frac{100}{100 - P_{esc}}\right)} = \left(\frac{P_{esc}}{100}\right)(y - W_{es})$$

Equation [C61] into [C56] gives

$$[C62]\ W_{es} + \frac{P_{esc}}{100}(y - W_{es}) = \frac{P_s}{100}\ y$$

$$[C63]\ W_{es} + \frac{P_{esc}}{100}\ y - \frac{P_{esc}}{100} W_{es} =$$

$$[C64]\ W_{es}\left[\ 1 - \frac{P_{esc}}{100}\ \right] = \left(\frac{P_s}{100} - \frac{P_{esc}}{100}\right) y$$

$$[C65]\ W_{es}\left[\ \frac{100 - P_{esc}}{100}\ \right] =$$

$$[C66]\ W_{es} = \left(\frac{100}{100 - P_{esc}}\right)\left(\frac{P_s - P_{esc}}{100}\right) y$$

$$[C67]\ W_{es} = \left(\frac{P_s - P_{esc}}{100 - P_{esc}}\right) y$$

and

$$[C68]\ W_{esc} = \frac{P_{esc}}{100}\left[\ y - \left(\frac{P_s - P_{esc}}{100 - P_{esc}}\right) y\ \right]$$

$$[C69] \qquad = \frac{(P_{esc})(y)}{100}\left[\ \frac{100 - P_{esc} - P_s + P_{esc}}{100 - P_{esc}}\ \right]$$

[C70] $$W_{esc} = \left(\frac{100 - P_s}{100 - P_{esc}}\right)\left(\frac{P_{esc}}{100}\right) y$$

and

[C71] $$W_c = y - W_{es} - W_{esc}$$

[C72] $$W_c = y - \left(\frac{P_s - P_{esc}}{100 - P_{esc}}\right) y - \left(\frac{100 - P_s}{100 - P_{esc}}\right)\left(\frac{P_{esc}}{100}\right) y$$

$$= \left[1 - \left(\frac{P_s - P_{esc}}{100 - P_{esc}}\right) - \left(\frac{100 - P_s}{100 - P_{esc}}\right)\left(\frac{P_{esc}}{100}\right) \right] y$$

$$= \left[\frac{100(100 - P_{esc}) - 100(P_s - P_{esc}) - (100 - P_s)(P_{esc})}{100(100 - P_{esc})} \right] y$$

$$= \left[\frac{10^4 - 100\, P_{esc} - 100\, P_s + 100\, P_{esc} - 100\, P_{esc} + P_s\, P_{esc}}{100(100 - P_{esc})} \right] y$$

$$= \left[\frac{100(100 - P_s) - P_{esc}(100 - P_s)}{100(100 - P_{esc})} \right] y$$

$$= \left[\frac{(100 - P_{esc})(100 - P_s)}{100(100 - P_{esc})} \right] y$$

[C73] $$W_c = \left(\frac{100 - P_s}{100}\right) y$$

But want X_v , and X_{es}

[C74] $$X_v = W_v / W_c$$

and

[C74] $$X_{es} = W_{es}/W_c$$

from Equations [C51] and [C73] gives

[C76] $$X_v = \frac{0.0196\ x}{\left(\frac{100 - P_{es}}{100}\right) y}$$

[C77] $$X_v = \frac{1.96\ x}{(100 - P_s)\ y}$$

and Equations [C67] and [C73] give

[C78] $$W_{es} = \frac{\left(\frac{P_s - P_{esc}}{100 - P_{esc}}\right) y}{\left(\frac{100 - P_s}{100}\right) y}$$

[C79] $$X_{es} = \frac{(P_s - P_{esc})(100)}{(100 - P_s)(100 - P_{esc})}$$

where P_s, P_{esc}, x and y are measured quantities:

P_s = Total sulfur analysis of residual + elemental sulfur, %

P_{esc} = Residual sulfur, %

x = ml of o.1 NaOH, ml

y = weight of carbon + elemental sulfur + residual sulfur after acid leaching and drying, gms

APPENDIX A-20-3

DERIVATION OF REACTION RATE EQUATIONS FOR SULFUR GENERATION - FOR CONTINUOUS ACID CONVERSION RUNS IN 8 STAGE, 4 INCH DIAMETER FLUID BED REACTOR

Calculation of Overall Rate of Reaction Using Carbon Analyses

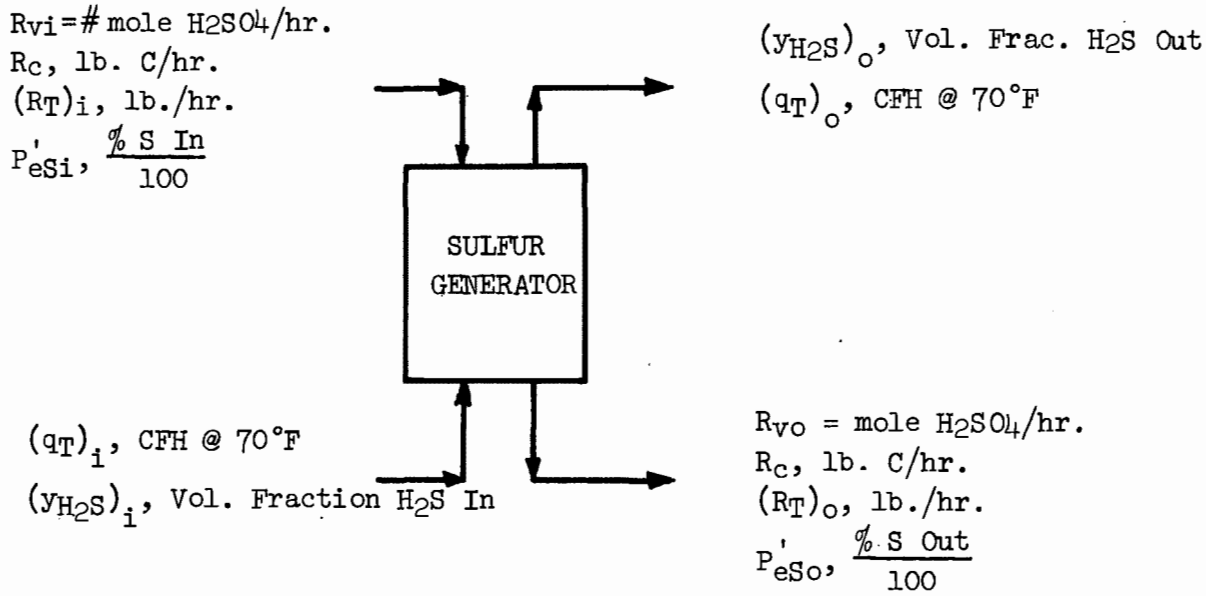

Writing a material balance over the differential element of volume, dV

input of acid	=	R_v
output of acid	=	$R_v + dR_v$
disappearance by reaction	=	$r_v\ dV$

$$R_v = R_v + dR_v + (-r_v)\ dV$$

$$dR_v = d[R_{vi}\ (1 - F)] = -R_{vi}\ dF$$

where F_c = fraction of acid converted.

Therefore $R_{vi}\ dF = (-r_v)\ dV$

$$\int_o^V \frac{dV}{R_{vi}} = \int_o^{F_c} \frac{dF}{-r_v}$$

$$\frac{V}{R_{vi}} = \frac{F_c}{-r_v}$$

$$(-r_v) = \frac{R_{vi}}{V} F_c$$

$$V = \frac{\pi D^2}{4(144)} \left[\frac{h}{12}\right][N_s]$$

$$R_{vi} = \left(R_{ci}\ X_{vi}\ \frac{\text{lb. acid}}{\text{hr.}}\right)\left(\frac{\text{lb. mole}}{98\ \text{lbs. acid}}\right)$$

the total material rate is

$$R_{Ti} = R_{ci} + \frac{R_{vi}}{F_v} + R_{ci}\ X_{eSc}$$

$$= R_{ci} + \frac{R_{ci}\ X_{vi}}{F_{vi}} + R_{ci}\ X_{eSc} = R_{ci}\left[1 + \frac{X_{vi}}{F_{vi}} + X_{eSc}\right]$$

$$R_{vi} = \frac{R_{Ti}}{\left(1 + \frac{X_{vi}}{F_{vi}} + X_{eSc}\right)(98)}$$

$$(-r_v)_{avg} = \left(\frac{R_{Ti}}{\left(1 + \frac{X_{vi}}{F_{vi}} + X_{eSc}\right)(98)} \Big/ \frac{\pi D^2 h N_s}{(4)(144)(12)}\right) F_c$$

$$(-r_v)_{avg} = \frac{70.5\ R_{Ti}\ X_{vi}\ F_c}{\left(1 + \frac{X_{vi}}{F_{vi}} + X_{eSc}\right)\pi D^2 h N_s} \quad \frac{\text{lb. mole acid}}{\text{ft.}^3\ \text{carbon-hr.}}$$

since $\rho_c = 36$ lbs./ft.^{3}

$$\left[(-r_v)_{avg} = 3.2\ \frac{R_{Ti}\ X_{vi}\ F_c}{\left(1 + \frac{X_{vi}}{F_{vi}} + X_{eSc}\right)(\pi D^2 h N_s)} \quad \frac{\text{lb. acid}}{\text{lb. C-min.}}\right]$$

[A-1] $$3\ H_2S + H_2SO_4 \longrightarrow 4\ S + 4\ H_2O$$

In order to relate the acid loading to per cent sulfur take a basis of 100 lb. of carbon and

let F_v = fraction of sorbed material that is H_2SO_4 (i.e. rest H_2O)
F_c = fraction of acid converted
W_{eS} = weight elemental sulfur as adsorbed acid
X_{eS} = weight ratio of elemental sulfur, lb. S/lb. C

W_{eSc} = weight non-acid sulfur on initial carbon (in matrix or adsorbed)

X_{eSc} = weight ratio non-acid sulfur on initial carbon (in matrix or adsorbed), lbs. S/lb. C.

P_s' = % sulfur/100

Total Weight of Material = W_T = Wt. Carbon + Wt. Non-Acid Initial Sulfur + Wt. Acid + Wt. Water + Wt. Sulfur Formed

$$\text{Wt. Acid} = 3.06 \frac{W_{eSi}}{F_v} - F_c[3.06 \frac{W_{eSi}}{F_{vo}}] = \frac{3.06\ W_{esi}}{F_v}[1-F_c]$$

Wt. Sulfur Formed = $4\ F_c\ W_{eSi}$ (by Reaction [A-1])

Wt. Non-Acid Initial S = $100\ X_{eSc}$

$$W_T = 100 + 100\ X_{eSc} + 3.06 \frac{W_{eSi}}{F_{vo}} + F_c[4\ W_{eSi} - 3.06 \frac{W_{eSi}}{F_{vo}}]$$

$$\text{Wt. Acid Related S at } F_c = W_{eSi} + 3\ F_c\ W_{eSi}$$
$$= W_{eSi}\ [1 + 3\ F_c]$$

$$P_{s_o}' = \frac{\text{Total Sulfur}}{\text{Total Weight}} = \frac{W_{eSi}\ [1 + 3\ F_c] + 100\ X_{Sc}}{100 + 100\ X_{Sc} + 3.06(\frac{W_{eSi}}{F_{vo}}) + F_c[4\ W_{eSi} - 3.06 \frac{W_{eSi}}{F_{vo}}]}$$

[Also $W_{eSi} = 100\ X_{eSi}$]

$$P_{s_o}' = \frac{100\ X_{eSi}\ [1 + 3\ F_c] + 100\ X_{Sc}}{100 + 100\ X_{Sc} + 3.06\ (\frac{100\ X_{eSi}}{F_{vo}}) + 400\ X_{eSi}\ F_c - 306\ X_{eSi}\ (\frac{F_c}{F_{vo}})}$$

and since $X_{vi} = \frac{98}{32} X_{eSi}$ and rearranging

$$\left[F_c = \frac{P_{s_o}'[100 + 100\ X_{eSc} + \frac{100\ X_{vi}}{F_{vo}}] - 32.6\ X_{vi} - 100 X_{eSc}}{.326\ X_{vi}\ [300 + P_{s_o}'(\frac{306}{F_{vo}} - 400)]} \right]$$

Taking a basis of 100 g. of carbon then the total weight of carbon and sorbed acid is

Total Wt. = Wt. Carbon + Wt. Sulfur in Carbon Matrix + Wt. Acid + Wt. Water Associated with Acid

$$W_T = 100 + W_{eSc} + W_{eSa}\left(\frac{98}{32}\right) + W_w$$

if F_v = Fraction Acid in Solution

$$W_w = \frac{W_A}{F_A} - W_v = W_v\left(\frac{1 - F_v}{F_v}\right) = 3.06\, W_{eSa}\left(\frac{1 - F_v}{F_v}\right)$$

Also $W_{eSc} = 100\, X_{eSc}$

$$W_T = 100 + 100\, X_{Sc} + 3.06\, W_{eSa} + 3.06\, W_{eSa}\left(\frac{1 - F_v}{F_v}\right)$$

$$= 100 + 100\, X_{Sc} + 3.06\, \frac{W_{eSa}}{F_v}$$

$$\text{if } P_s' = \frac{P_s}{100} = \frac{\%\ \text{Sulfur}}{100} = \frac{W_{eSa} + 100\, X_{Sc}}{100 + 100\, X_{Sc} + 3.06\, \frac{W_{eSa}}{F_v}}$$

$$\text{Also } X_{eSa} = \frac{W_{eSa}}{100}$$

Subst. $100\, X_{eSa} = W_{eSa}$ into P_s'

$$P_s' = \frac{100\, X_{eSa} + 100\, X_{Sc}}{100 + 100\, X_{Sc} + 3.06\left(\frac{100\, X_{eSa}}{F_v}\right)}$$

$$X_{eSa} = \frac{P_s'\,[100 + 100\, X_{Sc}] - 100\, X_{Sc}}{100\,[1 - 3.06\, \frac{P_s'}{F_v}]}$$

and since the adsorbed sulfur is present as sulfuric acid

$$\left[\; X_v = \frac{M_v}{M_{eS}}\, X_{eSa} = .036\, \frac{P_s'\,[100 + 100\, X_{eSc}] - 100\, X_{eSc}}{100\,[1 - 3.06\, \frac{P_s'}{F_v}]} \;\right]$$

The three equations derived and shown in brackets are thus used to calculate the conversion of acid to sulfur and the overall rate of reaction. These are general expressions. For the reactor used in these experiments

$D = 4$ inches
$h = 2.45$ inches
$N_s = 8$ stages
$X_{eSc} = 0.28$ (measured)
$F_{vi} = 0.73$

$$(-r_v)_{avg} = 3.2(10^{-3}) \frac{R_T X_{vi} F_c}{(1 + \frac{X_{vi}}{.73} + X_{eSc})}$$

Sample Calculation

For run SG-38 the experimentally measured values for the calculation are

$R_{Ti} = 53$ lb./hr.
$P'_{si} = .064$
$P'_{s_o} = .183$
$F_v = 0.73$
$X_{Sc} = .003$

$$X_v = .036 \left[\frac{.064\ (100 + 0.3) - 100\ (.003)}{100\ [1 - 3.06\ (\frac{.064}{.73})} \right] = 0.253 \frac{\text{lb. acid}}{\text{lb. C}}$$

$$F_c = \frac{0.183\ [100 + .3 + \frac{100\ (.253)}{.82}] - 32.6\ (.253) - 0.3}{.326\ (.253)\ [300 + .183\ (\frac{306}{.82} - 400)]}$$

$F_c = 0.61$

$$(-r_v)_{avg} = .0032 \left[\frac{(53)(.253)(.612)}{(1 + \frac{.253}{.73} + .003)} \right] = 1.96(10^{-2}) \frac{\text{lb. acid}}{\text{hr.-lb. C}}$$

Calculation of Overall Rate of Reaction Using Gas Analyses

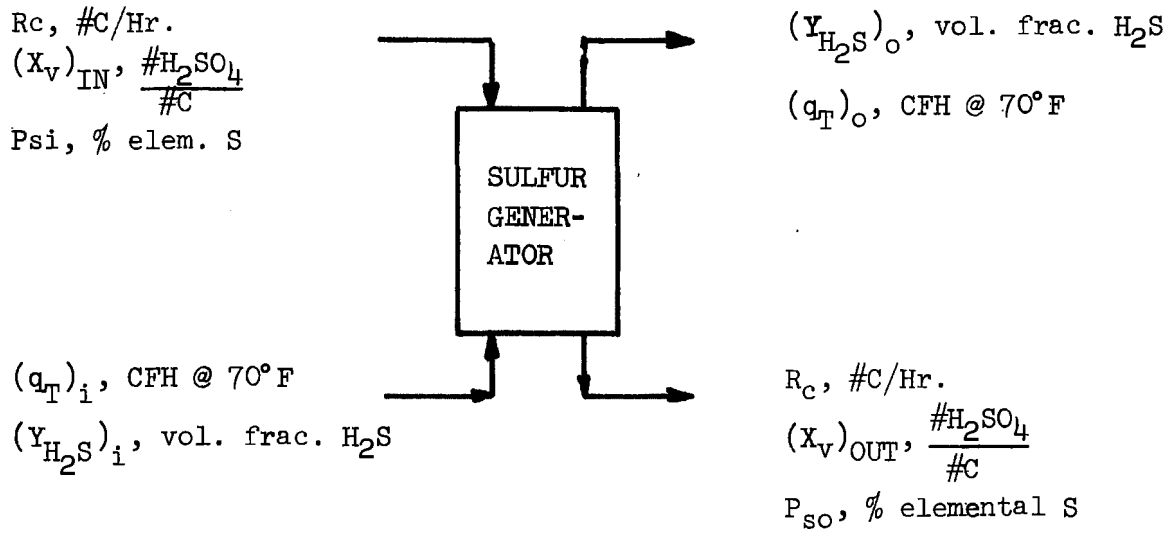

By the same derivation as for conversion based on carbon analyses

$$\frac{V}{R_{HSi}} = \int_o^{F_c} \frac{dF}{(-r_A)}$$

$$\frac{V}{R_{HSi}} = \frac{1}{(-r_A)_{ave}} \quad [\ F_c\ ]$$

$$\text{Fraction } H_2S \text{ converted} = F_c = \frac{N_{HSi} - N_{HSf}}{N_{HSi}}$$

$$= \frac{1}{(-r_{HS})_{ave}} \quad \left[\ \frac{N_{HSi} - N_{HSo}}{N_{HSi}}\ \right]$$

$$(-r_{HS})_{ave} = \frac{R_{HSi}}{V} \left[\ \frac{N_{HSi} - N_{HSo}}{N_{HSi}}\ \right]$$

$$R_{HSi} = \left(\frac{q_{Ti}}{359}\right) (Y_{H_2S})_i$$

$$V = \left[\frac{\pi D^2}{4(144)}\right] \left[\frac{h}{12}\right] [N_s]$$

Basis: 1 hr.

$$R_{HSi} = N_{HSi} = \left[\frac{(q_T)_i}{359}\right] (Y_{H_2S})_i$$

$$N_{HSo} = \left[\frac{(q_T)_o}{359}\right] (Y_{H_2S})_o$$

$$(q_T)_o = (q_T)_i + \frac{F_c}{3} (q_{H_2S})_i \qquad \text{[By Reaction [A-1]]}$$

$$F_c \approx \frac{(Y_{H_2S})_i - (Y_{H_2S})_o}{(Y_{H_2S})_i}$$

$$(q_{H_2S})_i = (q_T)_i \, (Y_{H_2S})_i$$

$$(q_T)_o = \left[1 + \frac{F}{3} (Y_{H_2S})_i\right] (q_T)_i$$

$$= \left[1 + \frac{(Y_{H_2S})_i}{3} \left[\frac{(Y_{H_2S})_i - (Y_{H_2S})_o}{(Y_{H_2S})_i}\right]\right] (q_T)_i$$

$$= \left[1 + \frac{(Y_{H_2S})_i - (Y_{H_2S})_o}{3}\right] (q_T)_i$$

$$= \left[\frac{3 + (Y_{H_2S})_i - (Y_{H_2S})_o}{3}\right] (q_T)_i$$

$$N_{HSf} = \left[\frac{(Y_{H_2S})_o}{359}\right]\left[\frac{3 + (Y_{H_2S})_i - (Y_{H_2S})_o}{3}\right] (q_T)_i$$

therefore $(-r_A)_{ave} = \frac{(q_T)_i(Y_{H_2S})_i(4)(144)(12)}{(359)(\pi)(D^2)(h)(N_s)}[1 - \frac{(Y_{H_2S})_o[3 + (Y_{H_2S})_i - (Y_{H_2S})_o](q_T)_i(359)}{(359)(3)(q_T)_i(Y_{H_2S})_i}]$

$$= \frac{(q_T)_i(Y_{H_2S})_i(4)(144)(4)}{(359)(\pi)(D^2)(h)(N_s)} [\frac{3(Y_{H_2S})_i - 3(Y_{H_2S})_o - (Y_{H_2S})_i(Y_{H_2S})_o + (Y_{H_2S})_o^2}{3\ (Y_{H_2S})_i}]$$

$$(-r_A)_{ave} = \frac{(q_T)_i\ (4)(144)(4)}{(359)(\pi)(D^2)(h)(N_s)} [3\ (Y_{H_2S})_i - 3\ (Y_{H_2S})_o - (Y_{H_2S})(Y_{H_2S})_o + (Y_{H_2S})_o^2]$$

For all runs in present glass unit

$D = 4$ inches
$N_s = 8$ stages
$h = 2.45$ inches

let $Y = Y_{H_2S}$

$$(-r_A)_{ave} = \frac{(q_T)_i\ (16)\ (144)}{(359)(\pi)(16)(2.45)(8)} [3Y_i - 3Y_o - Y_iY_o + Y_o^2]$$

but $(-r_A)_{ave}$ = rate H_2S disapp.

$= 3\ (-4_{H_2SO_4})_{ave}$

$$(-r_{H_2SO_4})_{ave} = \frac{(144)}{(359)(\pi)(2.45)(8)(3)} [3Y_i - 3Y_o - Y_iY_o + Y_o^2](q_T)_i$$

$$(-r_{H_2SO_4})_{ave} = 0.0021715\ [3Y_i - 3Y_o - Y_iY_o + Y_o^2]\ (q_T)_i$$

$$\frac{\#\ \text{moles}\ H_2SO_4}{\text{ft.}^3\ \text{C - Hr.}}$$

$$\left(\frac{\#\text{ moles Acid}}{\text{ft.}^3\text{ C - Hr.}}\right)\left(\frac{98\#\text{ acid}}{\#\text{ mole acid}}\right)\left(\frac{\text{ft.}^3\text{ C}}{36\ \#\text{ C}}\right)\left(\frac{1\text{ hr.}}{60\text{ min.}}\right)$$

$$(-r_{H_2SO_4})_{ave} = 0.00009851\ [3Y_i - 3Y_o - Y_iY_o + Y_o^2]\ (q_T)_i$$

For SG-38

$$(q_T)_i = 381$$
$$Y_i = .320$$
$$Y_o = .088$$

$$(-r_{H_2SO_4})_{ave} = 0.9851\ (10^{-4})\ [0.960 - 0.264 - 0.0282 + 0.0077]\ (381)$$

$$= 0.0254$$

APPENDIX A-20-4

DERIVATION OF SPACE VELOCITY DESIGN EQUATION FOR SO_2 SORBER

Design of an SO_2 Sorber

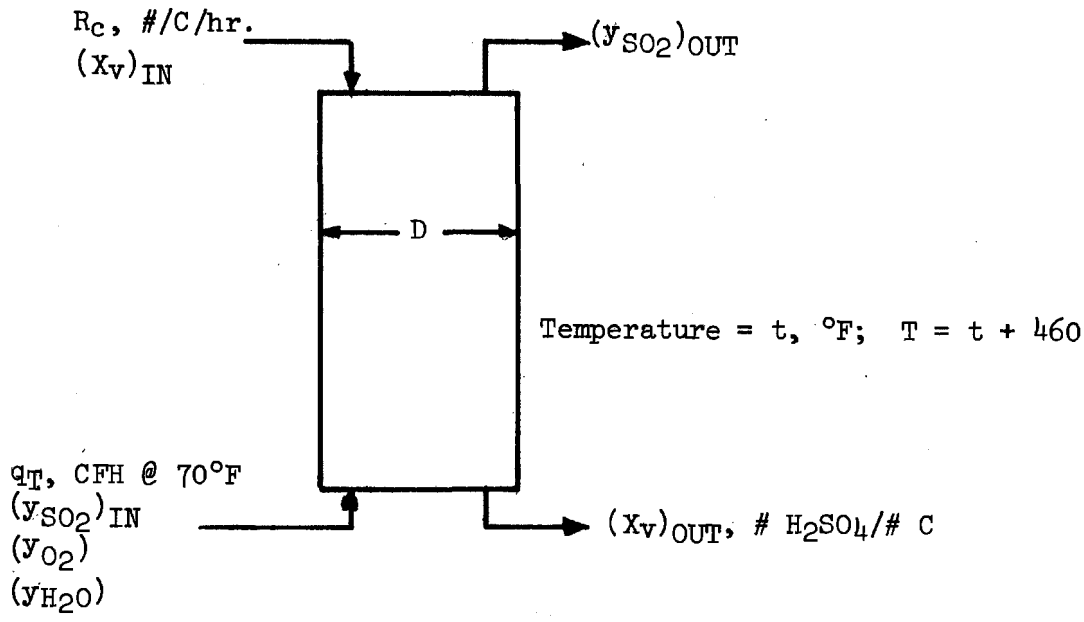

The fluidized bed is neither a conventional plug flow or back-mix reactor, however, for the following analysis a basis will be taken that the solid phase is well-mixed and the reaction is plug flow with respect to the gas phase. The plug flow design equation is

[F1] $$\frac{V}{R_{SO_2}} = \int_{F_{vi}}^{F_{vf}} \frac{dF}{-r_v} \quad *$$

$$\text{where } F_v = \left(1 - \frac{N_v}{N_{vO}}\right)$$

* Taken from O. Levenspiel, Chemical Reaction Engineering, John Wiley and Sons, Inc.; pg. 107 - 109, (1962)

The differential rate studies led to an analytical expression. Therefore the variables in Equation F1 are

$$[F2] \qquad (-r_v) = Q\,(1.59)(10^{-4})e^{\frac{5520}{T}}\left(1 - \frac{Xv}{0.38}\right) y_{SO_2}^{0.40}\; y_{O_2}^{0.63}\; y_{H_2O}^{0.73},$$

for NO concentration 100 ppm

where Q = conversion factor to $\frac{\#\text{ moles}}{\text{Hr.-ft.}^3}$ from $\frac{\#\ H_2SO_4}{\#\text{c-min.}}$

$$= \left[\frac{\#\ H_2SO_4}{\#\ \text{C-min.}}\right]\left[\frac{60\text{ min.}}{\text{Hr.}}\right]\left[\frac{\#\text{ mole}}{98\#\ H_2SO_4}\right]\left[\frac{36\ \#\text{c}}{\text{ft.}^3}\right]$$

$$= \frac{(60)(36)}{(98)}$$

$$[F3] \qquad R_{SO_2} = \frac{(q_T)(y_{SO_2})_{IN}}{386}$$

$$[F4] \qquad V = \left(\frac{h}{12}\right)\left(\frac{\pi D^2}{4(144)}\right)$$

Basis: 1 hour

$$[F5] \qquad N_{vo} = \frac{q_T(y_{SO_2})_{IN}}{386}$$

$$[F6] \qquad N_v = \frac{q_T(y_{SO_2})}{386}$$

$$[F7] \qquad F_{vf} = \left(1 - \frac{(y_{SO_2})_f}{(y_{SO_2})_{IN}}\right)$$

$$[F8] \qquad F_{vi} = \left(1 - \frac{(y_{SO_2})_i}{(y_{SO_2})_{IN}}\right)$$

$$[F9] \qquad F_v = \left(1 - \frac{y_{SO_2}}{(y_{SO_2})_{IN}}\right)$$

$$[F10] \qquad dF = -\frac{dy_{SO_2}}{(y_{SO_2})_{IN}}$$

The acid loading, X_V, will be taken as the loading leaving a stage since back mix of the solid phase was a basis taken for design. Therefore Equation F1 becomes after making a transformation from F to y_{SO_2} using Equations F9 and F10.

$$[F11] \quad \frac{V}{R_{SO_2}} = \frac{1}{(y_{SO_2})_{IN}} \int_{(y_{SO_2})_{IN}[1 - F_{vi}]}^{(y_{SO_2})_{IN}[1 - F_{vf}]} \frac{-d\, y_{SO_2}}{P\, y_{SO_2}^{0.40}}$$

$$\text{where } P = \frac{(60)(36)(1.59)(10^{-4})e^{\frac{5520}{T}}}{98} \left(1 - \frac{X_V}{0.38}\right) y_{O_2}^{0.63}\, y_{H_2O}^{0.73}$$

If the acid loading, O_2 and H_2O concentration, and temperature are assumed independent of SO_2 concentration the Equation (F11) can be integrated to give

$$[F12] \quad \frac{V}{R_{SO_2}} = \frac{-1}{P(y_{SO_2})_{IN}} \left[\frac{y_{SO_2}^{0.6}}{0.6} \right]_{(\ SO_2)_{IN}[1 - F_{vi}]}^{(y_{SO_2})_{IN}[1 - F_{vf}]}$$

$$[F13] \quad \frac{V}{R_{SO_2}} = \frac{-(y_{SO_2})_{IN}^{0.6}}{0.6P(y_{SO_2})_{IN}} \left[1 - F_{vf} \right]^{0.6} - \left[1 - F_{vi} \right]^{0.6} .$$

$$\text{but } F_{vf} = 1 - \frac{(y_{SO_2})_f}{(y_{SO_2})_{IN}}$$

$$\text{therefore} \quad (1 - F_{vf}) = \frac{(y_{SO_2})_f}{(y_{SO_2})_{IN}}$$

$$\text{and } F_{vi} = 1 - \frac{(y_{SO_2})_i}{(y_{SO_2})_{IN}}$$

$$\text{therefore} \quad (1 - F_{vi}) = \frac{(y_{SO_2})_i}{(y_{SO_2})_{IN}}$$

$$[F14] \quad \frac{V}{R_{SO_2}} = \frac{-(y_{SO_2})_{IN}^{0.6}}{0.6P(y_{SO_2})_{IN}} \left[\frac{1}{(y_{SO_2})_i^{0.6}} \right] \left[(y_{SO_2})_f^{0.6} - (y_{SO_2})_i^{0.6} \right]$$

$$[F15] \quad \frac{0.6\ P\ (y_{SO_2})_{IN} V}{R_{SO_2}} = \left[(y_{SO_2})_i^{0.6} - (y_{SO_2})_f^{0.6} \right]$$

$$[F16] \quad (y_{SO_2})_f^{0.60} = (y_{SO_2})_i^{0.60} - \frac{0.6\ P\ (y_{SO_2})_{IN} V}{R_{SO_2}}$$

$$[F17] \quad = (y_{SO_2})_i^{0.6} - \frac{(y_{SO_2})_{IN}\ (0.6)(60)(36)(1.59)(10^{-4})e^{\frac{5520}{T}}\ (1-\frac{X_v}{0.38})y_{O_2}^{0.63}y_{H_2O}^{0.63}(\pi)hD^2(386}{98\ (12)\ (4)\ (144)\ (q_T)\ (y_{SO_2})_{IN}}$$

DESIGN EQUATION

$$[F18] \quad \boxed{(y_{SO_2})_f^{0.6} = (y_{SO_2})_i^{0.6} - (3.687)(10^{-4}) \left[\frac{(1-\frac{Xv}{0.38})\ y_{O_2}^{0.63} y_{H_2O}^{0.73} hD^2 e^{\frac{5520}{T}}}{q_T} \right]}$$

Amount of SO_2 removal/stage H_2SO_4 Material Balance:

In = Out + Accumulation

but Accumulation = 0, since steady state is assumed

F19] $$\left(\frac{q_T}{386}\right)(y_{SO_2})_i(98) + R_c(X_v)_i = \left(\frac{q_T}{386}\right)(y_{SO_2})_f(98) + R_c(X_v)_f$$

want to solve for $(X_v)_i$

F20] $$\left(\frac{q_T}{386}\right)(98)[(y_{SO_2})_i - (y_{SO_2})_f] = R_c\,[(X_v)_f - (X_v)_i]$$

F21] $$(X_v)_f - (X_v)_i = \left(\frac{q_T}{386}\right)\left(\frac{98}{R_c}\right)[(y_{SO_2})_i - (y_{SO_2})_f]$$

MATERIAL BALANCE

F22] $$(X_v)_i = (X_v)_f - \left(\frac{q_T}{386}\right)\left(\frac{98}{R_c}\right)[(y_{SO_2})_i - (y_{SO_2})_f]$$

APPENDIX A-20-5

DERIVATION OF DESIGN EQUATION FOR SIZING OF SO_2 SORBER

The 18" diameter SO_2 sorber was designed on the following basis:

Linear Gas Velocity: 4 ft./sec.

Temperature: 200°F

Inlet SO_2 Conc.: 2,000 PPM

Outlet SO_2 Conc.: 200 PPM

Carbon Rate: 60 lbs./hr.

Acid Loading: 18.4 lbs. H_2SO_4/lb. C

Rate Model:

$$(-r_v) = 1.59\times10^{-4}\, e^{\frac{5520}{T}} \left(1 - \frac{X_v}{0.38}\right) y_{SO_2}^{0.40}\, y_{O_2}^{0.63}\, y_{H_2O}^{0.73} \quad \frac{\text{lb. } H_2SO_4}{\text{lb. C-min.}}$$

for NO concentration above 100 PPM.

Reactor diameter was calculated based on material balance and linear gas velocity restraints. Linear gas velocity is bounded above by the entrainment velocity, U_t, and below by the minimum fluidizing velocity, U_{mf}. The following equations from Kunii and Levelspiel[9] were used to estimate U_f and U_{mf}:

$$\frac{d_p\, U_{mf}\, \rho_g}{\mu} = \left[(33.7)^2 + 0.0408\, \frac{d_p^3\, \rho_g\, (\rho_s - \rho_g) g}{\mu^2}\right] - 3.37$$

$$U_t,\ \text{spherical} = \left[\frac{3.1\, g\, (\rho_s - \rho_g) d_p}{\rho_g}\right]^{1/2} \quad \text{for } 500 < Re_p < 200{,}000$$

where $Re_p = \dfrac{d_p\, \rho_g\, U_t}{\mu}$

d_p = particle diameter, cm

g = 980 cm/sec.^{2}, acceleration of gravity

μ = viscosity of gas, gm/cm-sec.

ρ_g = gas density, gm/cm^3

ρ_s = solid density, gm/cm^3

U_{mf}* = minimum fluidizing velocity, cm/sec.

U_t = entrained velocity, cm/sec.

The calculated U_{mf} in air for granular carbon with a mean particle diameter of 0.1 cm and density of 1.0 gm/cc is 0.87 ft./sec. at 70°F and 0.81 ft./sec. at 200°F. In flue gas at 200°F it is essentially the same at 0.82 ft./sec. Experimental measurement resulted in a U_{mf} of 0.5 in air at 70°F, which is more than 40% below the estimated value. This is not far outside Kunii and Levenspiel's ±34% predicted accuracy range. Shape effects are considered the main reason for the 40% difference. The calculated entrainment velocity in air for a particle diameter of 0.042 cm is 10.7 ft./sec. at 70°F and 11.9 ft./sec. at 200°F.

After allowance for a possible 40% over prediction, conservative estimates of 6 ft./sec. at 70°F and 7 ft./sec. at 200°F are obtained. Based on these estimates of U_{mf} and U_t a linear velocity operating range of 0.5 to 6 ft./sec. is indicated. Because a high linear velocity is desirable in order to minimize the required cross-section area, a value of 8 times the U_{mf} which is 4 ft./sec. was chosen for the sorber design.

Having specified the linear velocity, the reactor diameter was calculated from a material balance on sulfur.

---

*U_{mf} is based on mean particle diameter, whereas U_t is based on the smallest particle of significant percentage in the sample.

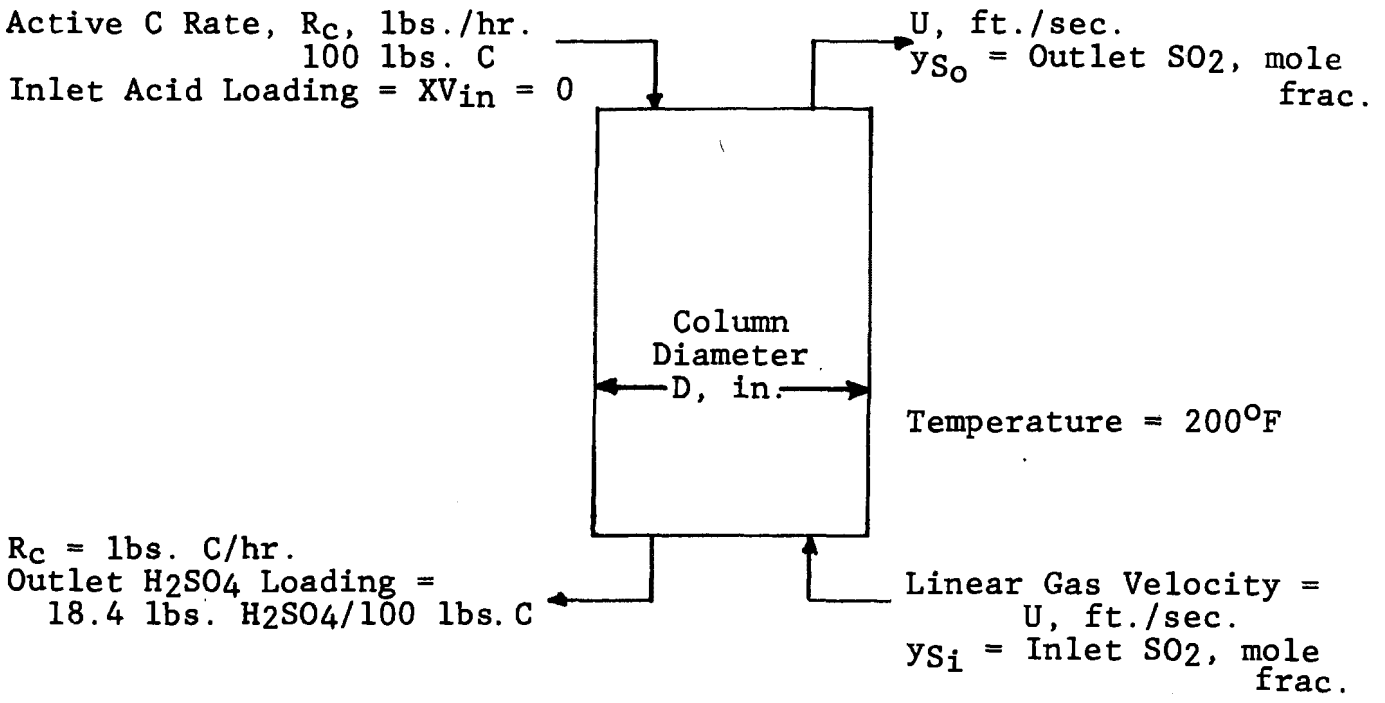

IN-OUT = Accumulation = 0 Steady State Assumed

$$\text{Sulfur Rate In} = (R_c)(XV_{in})\left(\frac{38}{98}\right) + (U)(3600)\left(\frac{\pi D^2}{4 \times 144}\right)(YS_{in})\left(\frac{492}{660}\right)\left(\frac{32}{359}\right)$$

$$= 1.304\ U(YS_{in})(D^2)$$

$$\text{Sulfur Rate Out} = (R_c)(XV_{out})\left(\frac{32}{98}\right) + 1.304\ U(YS_{out})(D^2)$$

$$D = \left[\frac{0.046\ R_c}{U(YS_{in} - YS_{out})}\right]^{1/2}$$

Using the formula and the design basis presented earlier, a diameter of 19.6 inches was obtained. Practical engineering restraints led to the choice of 18 inches for the sorber diameter. The design conditions were intended as a rough guide only, and 18 inches was chosen as the most convenient diameter from an engineering standpoint.

APPENDIX A-21

SAMPLE CALCULATIONS FOR INTEGRAL TESTING

The sample calculations for the pre-integral operation are given in most cases in Appendix A-20 when the derivation of the equation is presented. In this section the calculations for integral operation only are given, but they are also true for pre-integral operation.

A. SO_2 SORBER

1. SO_2 Removal Efficiency

For Task IV-A integral run, period 2, at elapsed time 124 hours:

Inlet $SO_2 + SO_3$ Conc. = 2,000 PPM
Outlet $SO_2 + SO_3$ Conc. = 800 PPM

$$P_{SA} = 100\left[1 - \frac{80}{2000}\right]$$

$$= \underline{\underline{96\%}}$$

2. Carbon Attrition Rate

For Task IV-A, period 2, 124 hours:

R_{18D} = 0.188 lbs. mat'l/hr. (dust rate collected by cyclone)
X_{esc} = 0.0487 lb. S/lb. C
P_{H_2O} = 6.3%
P_S = 7.2%

Composition of Dust

$$R_{CD} = \frac{\left[1 - \frac{6.3}{100} - 3.0625\left(\frac{7.2}{100}\right)\right](0.188)}{\left[1 - 2.0625(0.0487)\right]}$$

$$= \frac{0.716(0.188)}{0.900}$$

$$= \underline{\underline{0.149 \text{ lb. C/hr.}}}$$

but dust collector collected 0.12 lb. C/hr.

$$R_{CD}\ (\text{Total}) = 0.149 + 0.12$$

$$R_{CD} = \underline{\underline{0.27\ \text{lb. C/hr.}}}$$

3. <u>Residual Sulfur Loading on Regenerated Carbon Recycled to SO_2 Sorber</u>

For Task IV-A, period 2, Avg. 111-126 Hrs.

$$P_{esc} = 4.03\%$$
$$P'_{H_2O} = 1.8\%$$

$$X_{esc} = \frac{4.03}{100 - 1.8 - 4.03} = \frac{4.03}{94.17}$$

$$X_{esc} = \underline{\underline{0.0428\ \text{lb. S/lb. C}}}$$

4. <u>Outlet Sulfuric Acid Loading of Carbon from SO_2 Sorber</u>

For Task IV-A, period 2, 125 Hrs.

$$P_S = 8.28\%$$
$$X_{esc} = 0.0428\ \text{lb. S/lb. C}$$
$$P_{H_2O} = 8\%$$

Composition of Carbon

$$X_V = \frac{\frac{8.28}{100}(1 + 0.0487) - 0.0428(1 - \frac{8}{100})}{0.3265(1 - \frac{8}{100}) - \frac{8.28}{100}} = \frac{0.0868 - 0.0394}{0.0868 - 0.0394}$$

$$= \frac{0.0474}{0.2176}$$

$$= \underline{\underline{0.218\ \text{lb. } H_2SO_4\text{/lb. C}}}$$

B. SULFURIC ACID CONVERTER

1. Outlet Sulfuric Acid Loading on Carbon

P_V = 2.56%
P_S = 19.64%
P_{H_2O} = 2.82%

Composition of Carbon for Task IV-A, period 2, 124 Hrs.

$$X_{vo} = \frac{2.56}{100 - 19.64 - 2.82 - 0.6735(2.56)} = \frac{2.56}{75.82}$$

$$= \underline{\underline{0.034 \text{ lb. acid/lb. C}}}$$

2. Outlet Elemental Sulfur Loading on Carbon

For Task IV-A, period 2, Avg. 111-126 Hrs.

P_S = 19.64%
P_{vo} = 2.56%
P_{H_2O} = 2.82%
X_{esc} = 0.0428 lb. S/lb. C

$$X_{esc} = \frac{19.64 - 0.3265(2.56)}{100 - 19.64 - 2.82 - 0.6735(2.56)} - 0.0428$$

$$= \frac{18.804}{75.816} - 0.0487 = 0.2480 - 0.0428$$

$$= \underline{\underline{0.205 \text{ lb. S/lb. C}}}$$

3. Hydrogen Sulfide Utilization in Acid Converter

Task IV-A, period 2, Avg. 115-124 Hrs.

Outlet H_2S = 0.048%
Outlet N_2 = 46.4%
Inlet H_2S = 27.2%
Inlet N_2 = 27.2%

$$P_{H_2S} = 100\left[1 - \frac{0.048/46.4}{27.2/52.4}\right]$$

$$= \underline{\underline{99.8\%}}$$

4. Acid Conversion to Elemental Sulfur in Acid Converter

Task IV-A, period 2, Avg. 111-126 Hrs.

X_{eso} = X_{es} from sample calculation, B.2 = 0.205 lb. S/lb. C

X_{vi} = X_v from sample calculation, A.4 = 0.218 lb. acid/lb. C

$$P_{vc} = 100\left(\frac{98}{132}\right)\left(\frac{0.205}{0.218}\right)$$

$$= \underline{\underline{70\%}}$$

5. SO_2 Breakthrough from Acid Converter

For Task IV-A, Period 2, Avg. 111-126 Hrs.

q_{N_2} = 121 CFH @ 70°F

Y_{SO_2} = 0.0115

Y_{N_2} = 0.464

X_{vi} = X_v from sample calc., A.4 = 0.218 lb. acid/lb. C

R_T = 31 lbs. mat'l/hr.

$(P_S)_{KF}$ = P_{esc} from sample calc., A.3 = 4.03%

$(P_{H_2O})_{KF}$ = P_{H_2O} from sample calc., A.3 = 1.8%

$$Z_{SO_2} = \frac{0.2539(121)(0.0115)}{(0.464)(0.218)(31)\left[1 - \frac{4.03}{100} - \frac{1.8}{100}\right]}$$

$$= \underline{\underline{0.12 \text{ moles } SO_2/\text{mole acid sorbed on C in } SO_2 \text{ sorber}}}$$

6. H_2S Breakthrough from Acid Converter

For same task and time period all numbers same but additionally

y_{H_2S} = 0.00048

$$Z_{H_2S} = \frac{0.2539(121)(0.00048)}{0.464(0.218)(31)(0.9417)}$$

$$= \underline{\underline{0.005 \text{ moles } H_2S/\text{mole acid sorbed in } SO_2 \text{ sorber}}}$$

C. SULFUR STRIPPER/H_2S GENERATOR

1. Inlet Sulfur Loading on Carbon

From sample calc. B.2 = 0.205 lb. S/lb. C

2. Inlet Acid Loading on Carbon

From sample calc. B.1 = 0.034 lb. acid/lb. C

3. Outlet Sulfur Loading on Carbon

From sample calc. A.3 = 0.0428 lb. S/lb. C

4. Hydrogen Utilization

Task IV-A, period 2, Avg. 111-126 Hrs.

$(Y_{H_2})_o = 0.0$
$(Y_{N_2})_o = 0.524$
$(Y_{H_2})_i = 0.508$
$(Y_{N_2})_i = 0.492$

$$P_{H_2} = 100 \left[1 - \frac{(0)/0.524}{(0.508)/0.492} \right]$$

$$= \underline{\underline{100\%}}$$

5. Hydrogen Conversion to Hydrogen Sulfide

Task IV-A, period 2, Avg. 111-126 Hrs.

$(Y_{H_2S})_o = 0.277$
$(Y_{N_2})_o = 0.524$
$(Y_{H_2})_i = 0.508$
$(Y_{N_2})_i = 0.492$
$(q_{N_2})_o = 121$
$(q_{N_2})_i = 100$

$$(P_{H_2S})_u = 100 \left[\frac{0.277/0.524}{0.508/0.492} \right] \left(\frac{121}{100} \right)$$

$$= \underline{\underline{62\%}}$$

6. Hydrogen Requirement for Acid Conversion

Task IV-A, period 2, Avg. 111-126 Hrs.

$(Y_{H_2})_i = 0.508$

$(Y_{N_2})_i = 0.492$

$(q_{N_2})_i = 100$

$(X_v)_o$ = X_v from sample calc. A.4 = 0.218 lb. acid/lb. C

$(R_T)_{KF}$ = R_T from sample calc. B.5 = 31 lbs./hr.

$(P_{H_2O})_{KF}$ = P_{H_2O} from sample calc. A.3 = 1.8%

$(P_S)_{KF}$ = P_{esc} from sample calc. A.3 = 4.03%

$$\alpha_{H_2} = \frac{98}{386}\,\frac{0.508}{0.492}\,\frac{100}{0.218}\,\frac{1}{31[1 - \frac{1.8}{100} - \frac{4.03}{100}]}$$

= 4.1 moles H_2/mole SO_2 removed in SO_2 sorber

7. Carbon Burn-off

Task IV-A, period 2, Avg. 111-126 Hrs.

$Y_{CO_2} = 0.0035$

$Y_{N_2} = 0.492$

$q_{N_2} = 121$

$$R_{CBO} = \left(\frac{0.0035}{0.492}\right)\left(\frac{121}{386}\right)(12)$$

= 0.027 lb. C/hr.

D. SULFUR CONDENSER

1a. Sulfur Recovery - % Sulfur Stripped

Task IV-A, period 2, Avg. 111-126 Hrs.

X_{es} = X_{es} from sample calc. B.2 = 0.205 lb. S/lb. C

$(R_T)_{KF}[1 - \frac{(P_{H_2O})_{KF}}{100} - \frac{(P_S)_{KF}}{100}] = 31[1 - \frac{1.8}{100} - \frac{4.03}{100}] =$ 29.2 lbs. C/hr. from previous calc.

X_{vo} = X_{vo} from sample calc. B.1 = 0.034 lb. S/lb. C

R_{es} = 1.75 lbs. S/hr.

$$P_{SR} = 100 [\frac{1.75}{[0.205 + 32(0.034)/98](29.2)}] = \frac{175}{6.31}$$

$$= \underline{\underline{28\%}}$$

1b. Sulfur Recovery - % of SO_2 Recovered Based on S Collected

Task IV-A, period 2, Avg. 111-126 Hrs.

R_{es} = 1.75 lbs. S/hr.

$(X_v)_o$ = X_v from sample calc. A.4 = 0.218 lb. H_2SO_4/lb. C

$(R_T)_{KF}$ = R_T from sample calc. B.5 = 31 lbs./hr.

$(P_{H_2O})_{KF}$ = P_{H_2O} from sample calc. A.3 = 1.8%

$(P_S)_{KF}$ = P_{esc} from sample calc. A.3 = 4.03%

$$(P_{SR})_{SS} = 100 [\frac{(98)1.75}{(32)(0.218)(31)[1 - \frac{1.8}{100} - \frac{4.03}{100}]}]$$

$$= \underline{\underline{84\%}}$$

1c. <u>Sulfur Recovery, % of SO_2 Recovery Based on S Values in Outlet Gas of Acid Converter</u>

Task IV-A, period 2, Avg. 111-126 Hrs.

$(Y_{H_2S})_o$ = Y_{H_2S} from sample calc. B.5 = 0.00048

$(Y_{SO_2})_o$ = Y_{SO_2} from sample calc. B.5 = 0.0115

$(Y_{N_2})_o$ = Y_{N_2} from sample calc. B.5 = 0.464

$(q_{N_2})_o$ = q_{N_2} from sample cal. B.5 = 121 CFH @ 70°F

$(X_v)_o$ = X_v from sample calc. A.4 = 0.218 lb. acid/ lb. C

$(R_T)_{KF}$ = R_T from sample calc. B.5 = 31 lbs./hr.

$(P_S)_{KF}$ = P_S from sample calc. A.3 = 4.03%

$(P_{H_2O})_{KF}$ = P_{H_2O} from sample calc. A.3 = 1.8%

$$(P_{SR})'_{SS} = 100\left[1 - \frac{98[0.00048 + 0.0115](121)}{386(0.464)(0.218)(31)[1 - \frac{4.03}{100} - \frac{1.8}{100}]}\right]$$

$$= 100[1 - 0.125]$$

$$= \underline{\underline{88\%}}$$

APPENDIX A-22

COMPUTER PROGRAMS

		Page
1.	Stepwise Multiple Regression Program	614
2.	Program To Make Statistical Calculations on SO_2 Data	621
3.	SO_2 Sorber Design	623
4.	SO_2 Sorption Rate Computer Program - Bench Scale	625
5.	Sulfur Generation Rate Computer Program - Bench Scale	627
6.	Computer Program for Gravimetric Flow Experiment Calculations	629
7.	Computer Program for Calculation of Differential Sorption Rate and Model Evaluation	631
8.	Computer Program for Material Balance Rate Calculations and Space Velocity for 6" SO_2 Sorber	633
9.	Computer Program for Calculation of Integrated Pilot Plant Results of Westvaco SO_2 Recovery Process from Steady State Data	636

APPENDIX A-22-1

STEPWISE MULTIPLE REGRESSION PROGRAM

```
                    DISK OPERATING SYSTEM/360 FORTRAN    360N-FO-451  CL 3-8

C       PROGRAM NUMBER C9044-IBM                                          0005
C       1130 STEPWISE MULTIPLE REGRESSION PROGRAM, 3/14/66                0010
C       REVISED FOR MULTIPLE RUNS FROM ONE SET OF DATA BY SAM THOMPSON  3/5/1969
C
C       DIMENSIONS                                                        0130
C
        DIMENSION DATX(30),CONST(10),ITRAN(33),JTRAN(33),KTRAN(33),LTRAN(3
       13),RSPNS(8)
        DIMENSION RIJ(30,30),XBAR(30), SIGMA(30)
        DIMENSION SIGB(30),B(30),ID(30),DATY(20)
C
C       DEFINE DATA FILES
C
        DEFINE FILE 5(400,100,L,IFA)
        DEFINE FILE 6(400,100,L,IFB)
C
C       INITIALIZE DATA FILES
C
  101   IFB = 1
        MIN = 1
        MOUT = 3
C
C       READ CONTROL CARD                                                 0300
C
        READ(MIN,5) NXIN,NOBS,NRUN,NYIN,NOBS2
    5   FORMAT(5I4)
C           NXIN = NUMBER OF X'S READ IN.
C           NOBS= NO OF OBSERVATIONS, MUST EXCEED NVAR.
C           NRUN = NUMBER OF DIFFERENT RUNS TO BE MADE ON THIS SET OF DATA
C           NYIN = NUMBER OF Y'S READ IN.
C       NOBS2= NUMBER OF OBSERVATIONS TO BE INCLUDED IN COMPUTING
C               ESTIMATES AND RESIDUALS BUT NOT TO BE USED IN FORMING
C               REGRESSION EQUATION. MUST BE PLACED IN BACK OF DATA DECK.
        NOBS2 = NOBS2 + NOBS
        NVIN = NXIN + 1
    2   FORMAT(4I4,2F6.3,2I2,I4,A1,I3,I4)
        IF(NRUN)641,641,102
C
C       READ IN RAW DATA AND STORE IN FILE 6.
C
  102   DO 50 I =1,NOBS2
        READ(MIN,3)(DATX(J),J =1,NXIN),(DATY(J),J=1,NYIN)
        WRITE(6'IFB)(DATX(J),J=1,NXIN),(DATY(J),J=1,NYIN)
   50   CONTINUE
    3   FORMAT(8F10.0)
        DO 640 NR = 1,NRUN
        IFA = 1
        READ(MIN,2)NVAR,NTRAN,NCONS,NY,FIN,FOUT,IRES,IORGN,NL,ICOM,LGANT,
       1LANOV
C           NVAR= NO OF VARIABLES USED IN REGRESSION, INCLUDING VARIABLES     0104
C              FROM TRANSFORMATIONS AND DEPENDANT VARIABLE (WHICH MUST BE
C              LAST IN SEQUENCE OF USED VARIABLES)
C           NTRAN= NO OF TRANSFORMATIONS (IF ANY)
C           NCONS= NO OF CONSTANTS USED IN TRANSFORMATIONS (IF ANY)
```

```
C         NY = NUMBER OF SUBSCRIPT OF Y USED.
C         FIN= F-VALUE MIN TO BE INCLUDED IN REGRESSION, MUST NOT BE LESS    0108
C            THAN FOUT
C         FOUT= F-VALUE MIN TO BE OUTPUT ON PRINTOUT                         0109
C      IORGN = 1 TO SUPPRESS CONSTANT
C            = 0 OTHERWISE
C         IRES= BLANK OR ZERO TO OMIT RESIDUALS ANALYSIS                     0110
C             = 1 TO GET RESIDUALS AND ANALYSIS
C         NL= NUMBER OF HEADER CARDS TO FOLLOW.
C         ICOM = ALPHAMERIC COMMA
C         LGANT = 1 TO PRINTOUT ANTI-LOG OF ACTUAL Y VALUES IN RESIDUALS
C            AND PREDICTIONS, BLANK OTHERWISE.
C      LANOV = 1 IF RESIDUALS ARE TO BE PUNCHED FOR COVARIANCE RUN.
C            = 0 OR BLANK OTHERWISE.
C
      WRITE(MOUT,54)
   54 FORMAT(1H1)
C
C      READ AND WRITE LABELING HEADER CARDS.
C
      DO 1000 I=1,NL
      READ(MIN,1001)
      WRITE(MOUT,1001)
 1001 FORMAT(80H
     1                                                                        )
 1000 CONTINUE
      IF(NTRAN)641,730,700
C
C     READ TRANSFORMATION CARDS                                             0350
C
  700 READ(MIN,71)(ITRAN(I),JTRAN(I),KTRAN(I),LTRAN(I),I =1,NTRAN)
   71 FORMAT(40I2)
      IF(NCONS)641,730,720
C
C     READ CONSTANT CARD                                                    0390
C
  720 READ(MIN,03)(CONST(I),I =1,NCONS)
C
C     INITIALIZE.                                                           0420
C
  730 OBS=NOBS
      NINDV=NVAR-1                                                          0440
      DO 90 I=1,NVAR
      XBAR(I)=0.0                                                           0460
      DO 90 J=1,NVAR
   90 RIJ(I,J)=0.0                                                          0480
      IFB = 1
C
C     READ RAW DATA FROM DISK FILE NUMBER 6.
C
      DO 110 I=1,NOBS2
      READ(6'IFB)(DATX(J),J=1,NXIN),(DATY(J),J=1,NYIN)
      DATX(NVIN) = DATY(NY)
      IF(NTRAN)641,860,750
```

```
C
C     TRANSFORMATION OF RAW DATA                                        0540
C
  750 CONTINUE                                                          0545
      DO 850 M= 1,NTRAN
      II=ITRAN(M)                                                       0560
      JJ=JTRAN(M)                                                       0570
      KK=KTRAN(M)                                                       0580
      LL=LTRAN(M)                                                       0590
      GO TO (760,770,780,790,800,810,820,830,840,845,847),II
C     X(J)=X(K)                                                         0610
  760 DATX(JJ)=DATX(KK)
      GO TO 850                                                         0630
C     X(J)=-X(K)                                                        0640
  770 DATX(JJ)=-DATX(KK)
      GO TO 850                                                         0660
C     X(J)=LOG X(K)                                                     0670
  780 DATX(JJ)=ALOG(DATX(KK))
      GO TO 850                                                         0690
C     X(J)=1/X(K)                                                       0700
  790 DATX(JJ)=1.0/DATX(KK)
      GO TO 850                                                         0720
C     X(J)=X(K)+X(L)                                                    0730
  800 DATX(JJ)=DATX(KK)+DATX(LL)
      GO TO 850                                                         0750
C     X(J)=X(K)*X(L)                                                    0760
  810 DATX(JJ)=DATX(KK)*DATX(LL)
      GO TO 850                                                         0780
C     X(J)=X(K)/X(L)                                                    0790
  820 DATX(JJ)=DATX(KK)/DATX(LL)   7
      GO TO 850                                                         0810
C     X(J)=X(K)+C(L)                                                    0820
  830 DATX(JJ)=DATX(KK)+CONST(LL)   8
      GO TO 850                                                         0840
C     X(J)=X(K)*C(L)                                                    0850
  840 DATX(JJ)=DATX(KK)*CONST(LL)   9
      GO TO 850
  845 DATX(JJ) = DATX(KK)**CONST(LL)   10
      GO TO 850
  847 DATX(JJ) = CONST(KK)**CONST(LL)   11
  850 CONTINUE                                                          0870
  860 CONTINUE                                                          0875
      IF(IRES)870,880,870
C
C     WRITE TRANSFORMED DATA IN DISK FILE 5.
C
  870 CONTINUE                                                          0895
      WRITE(5'IFA)(DATX(J),J=1,NVAR)
  880 CONTINUE                                                          0905
      IF(NOBS-I)110,883,883
  883 DO 100 J = 1,NVAR
      XBAR(J)=XBAR(J)+DATX(J)                                           0920
      IF(IORGN)890,890,885
  885 XBAR(J) = 0.00000
```

```
  890 DO 100 K=1,NVAR
  100 RIJ(J,K)=RIJ(J,K)+DATX(J)*DATX(K)
  110 CONTINUE                                                          0950
C
C     COMPUTE STANDARD DEVIATIONS*SQR ROUTE (OBS-1)                     0960
C
      DO 120 I=1,NVAR                                                   0970
  120 SIGMA(I)=(RIJ(I,I)-XBAR(I)*XBAR(I)/OBS)**.5                       0980
C
C     COMPUTE CORRELATION MATRIX                                        0990
C
      DO 130 I=1,NVAR                                                   1000
      DO 130 J=1,NVAR                                                   1010
  130 RIJ(I,J)=(RIJ(I,J)-XBAR(I)*XBAR(J)/OBS)/(SIGMA(I)*SIGMA(J))       1020
C
C     COMPUTE MEANS AND STANDARD DEVIATIONS                             1030
C
      DO 140 I=1,NVAR                                                   1040
      XBAR(I)=XBAR(I)/OBS                                               1050
  140 SIGMA(I)=SIGMA(I)/(OBS-1.0)**.5                                   1060
C
C     WRITE AVERAGES, STANDARD DEVIATIONS, AND SIMPLE CORRELATION MATRIX. 1100
C
      WRITE(MOUT,51)                                                    1110
   51 FORMAT(' AVERAGES')
      WRITE(MOUT,52)(I,XBAR(I),ICOM,I=1,NINDV),NVAR,XBAR(NVAR)          1130
   52 FORMAT(4(' VAR(',I2,')=',E13.6,A1))
      WRITE(MOUT,53)                                                    1150
   53 FORMAT('0STANDARD DEVIATIONS')                                    1160
      WRITE(MOUT,52)(I,SIGMA(I),ICOM,I=1,NINDV),NVAR,SIGMA(NVAR)        1170
      WRITE(MOUT,55)                                                    1180
   55 FORMAT('0SIMPLE CORRELATION COEFFICIENTS')                        1190
      DO 150 I=1,NINDV                                                  1200
      WRITE(3,56)(I,J,RIJ(I,J),ICOM,J=I,NINDV),I,NVAR,RIJ(I,NVAR)       1210
  150 CONTINUE                                                          1215
   56 FORMAT(4(' VARS(',I2,',',I2,')=',E12.5,A1))
      DO 190 I=1,NVAR                                                   1260
      SIGB(I)=0.0                                                       1270
  190 B(I)=0.0                                                          1280
      NENT=0                                                            1290
      DF=OBS-1.0                                                        1300
      NSTEP=-1                                                          1310
C
C     TRANSFORM SIGMA VECTOR FROM STANDARD DEVIATIONS TO SQUARE         1320
C     ROOTS OF SUMS OF SQUARES.                                         1330
C
      DO 310 I=1,NVAR                                                   1340
  310 SIGMA(I)=SIGMA(I)*(OBS-1.0)**.5                                   1350
C
C     BEGIN STEP NUMBER NSTEP.                                          1360
  200 NSTEP=NSTEP+1                                                     1370
      STDEE=((RIJ(NVAR,NVAR)/DF)**.5)*SIGMA(NVAR)                       1380
      DF=DF-1.0                                                         1390
      VMIN=0.0
```

```
      VMAX=0.0
      NIN=0
C
C     FIND MINIMUM VARIANCE CONTRIBUTION OF VARIABLES IN REGRESSION
C     EQUATION. FIND MAXIMUM VARIANCE CONTRIBUTION OF VARIABLES
C      NOT IN REGRESSION EQUATION.
C
      DO 300 I=1,NINDV
      IF(RIJ(I,I)-.001)300,300,210
  210 VI=RIJ(I,NVAR)*RIJ(NVAR,I)/RIJ(I,I)
      IF(VI)240,300,220
  220 IF(VI-VMAX)300,300,230
  230 VMAX=VI
      NMAX=I
      GO TO 300
  240 NIN=NIN+1
      ID(NIN)=I
C
C     COMPUTE REGRESSION COEFFICIENT AND ITS STANDARD DEVIATION.
C
      B(NIN)=RIJ(I,NVAR)*SIGMA(NVAR)/SIGMA(I)
      SIGB(NIN)=(STDEE*RIJ(I,I)**.5)/SIGMA(I)
      IF(VMIN)250,260,641
  250 IF(VI-VMIN)300,300,260
  260 VMIN=VI
      NMIN=I
  300 CONTINUE
      IF(NIN) 641,460,400
C
C     COMPUTE CONSTANT TERM.
C
  400 BSUBO=XBAR(NVAR)
      DO 410 I=1,NIN
      J=ID(I)
  410 BSUBO=BSUBO-B(I)*XBAR(J)
      BANTI = EXP(BSUBO)
      IF(NENT) 641,480,420
C
C     OUTPUT FOR VARIABLE ADDED
C
  420 WRITE(MOUT,57)NSTEP,K
   57 FORMAT('0STEP NUMBER ',I2,10X,'ENTER VARIABLE ',I2)
  425 WRITE(MOUT,58)STDEE
   58 FORMAT(' STANDARD ERROR OF ESTIMATE=',E15.7)
      R=(1.-RIJ(NVAR,NVAR))
      IDEN=OBS-DF-2.0
      IDFD=DF+1.0
      F=(SIGMA(NVAR)**2-(STDEE**2)*(DF+1.0))/((OBS-DF-2.0)*STDEE**2)
      WRITE(MOUT,59) R,IDEN,IDFD,F,BSUBO,BANTI
   59 FORMAT(' R SQUARED =',E15.7,/,
     1' GOODNESS OF FIT,F(',I4,',',I4,')=',E15.7,/,
     2' CONSTANT TERM =',E15.7,7X,' ANTILOG CONSTANT TERM =',E15.7,/,
     3' VAR      COEFF        STD DEV     T VALUE     BETA COEFF',/,23X,
     4' COEFF')
```

```
      DO 430 I=1,NIN
      J=ID(I)
      T=B(I)/SIGB(I)
  430 WRITE(3,63)ID(I),B(I),SIGB(I),T,RIJ(J,NVAR)
   63 FORMAT(' ',I3,1X,E13.5,1X,E12.6,F11.4,1X,E13.5)
C
C     COMPUTE F LEVEL FOR MINIMUM VARIANCE CONTRIBUTION VARIABLE
C     IN REGRESSION EQUATION.
C
      FLEVL=VMIN*DF/RIJ(NVAR,NVAR)
      IF(FOUT*FLEVL)460,460,450
C
C     INITIALIZE FOR REMOVAL OF VARIABLE K FROM EQUATION.
C
  450 K=NMIN
      NENT=0
      DF=DF+2.0
      GO TO 500
C
C     COMPUTE F LEVEL FOR MAXIMUM VARIANCE CONTRIBUTION VARIABLE
C     NOT IN EQUATION.
C
  460 FLEVL=VMAX*DF/(RIJ(NVAR,NVAR)-VMAX)
      IF(FLEVL-FIN)600,600,470
C
C     INITIALIZE FOR ENTRY OF VARIABLE K INTO EQUATION.
C
  470 K=NMAX
      NENT=K
      GO TO 500
C
C     OUTPUT FOR VARIABLE DELETED
C
  480 WRITE(MOUT,64)NSTEP,K
   64 FORMAT('0STEP NUMBER ',I2,10X,'DELETE VARIABLE ',I2)
      GO TO 425
C
C     UPDATE MATRIX
C
  500 CONTINUE
      DO 540 I = 1,NVAR
      IF(I-K)510,540,510
  510 CONTINUE
      DO 530 J = 1,NVAR
      IF(J-K)520,530,520
  520 RIJ(I,J)=RIJ(I,J)-RIJ(I,K)*RIJ(K,J)/RIJ(K,K)
  530 CONTINUE
  540 CONTINUE
      DO 560 J=1,NVAR
      IF(J-K)550,560,550
  550 RIJ(K,J)=RIJ(K,J)/RIJ(K,K)
  560 CONTINUE
      DO 580 I=1,NVAR
      IF(I-K)570,580,570
```

```
  570 RIJ(I,K)=-RIJ(I,K)/RIJ(K,K)                                    2310
  580 CONTINUE                                                       2320
      RIJ(K,K)=1.0/RIJ(K,K)                                          2330
      GO TO 200                                                      2340
  600 IF(IRES)610,640,610                                            2350
C
C     PRINT RESIDUALS                                                2360
C
  610 IFA=1                                                          2370
      WRITE(MOUT,67)                                                 2380
   67 FORMAT('0 OBS        ACTUAL     ESTIMATE     RESIDUAL')        2390
C
C     READ TRANSFORMED VARIABLES FROM FILE 5
C
      NMBER = 0
      KOUNT = 0
      SUMR2=0.000000
      DO 630 K=1,NOBS2
      READ(5'IFA)(DATX(I),I=1,NVAR)
      EST=BSUBO                                                      2420
      DO 620 I=1,NIN                                                 2430
      J=ID(I)                                                        2440
  620 EST=EST+B(I)*DATX(J)
      IF(LGANT)624,624,622
  622 EST = EXP(EST)
      DATX(NVAR) = EXP(DATX(NVAR))
  624 RESID=DATX(NVAR)-EST
      RES2=RESID*RESID
      SUMR2=SUMR2+RES2
      WRITE(MOUT,68)K,DATX(NVAR),EST,RESID
   68 FORMAT(' ',I4,E12.6,1X,F14.6,1X,E14.6)
      IF(LANOV)630,630,625
C
C     PUNCH RESIDUALS FOR ANALYSIS OF COVARIANCE RUN.
C
  625 KOUNT = KOUNT + 1
      NMBER = NMBER + 1
      RSPNS(KOUNT) = RESID
      IF(NMBER-NOBS2)626,627,626
  626 IF(KOUNT-8)630,627,630
  627 WRITE(2,4)(RSPNS(J),J=1,KOUNT)
    4 FORMAT(8F10.6)
      KOUNT = 0
  630 CONTINUE                                                       2490
      WRITE(3,69)SUMR2
   69 FORMAT(/,7X,' RESIDUAL SUM OF SQUARES =',E14.6)
  640 CONTINUE
      GO TO 101
  641 CALL EXIT
      END                                                            2620
```

APPENDIX A-22-2

PROGRAM TO MAKE STATISTICAL CALCULATIONS ON SO_2 DATA

360N-FO-451 CL 3-8

```
C     PROGRAM TO MAKE STATISTICAL CALCULATIONS ON SO2 DATA
C
C     DESIGNED BY G.N. BROWN
C     WRITTEN BY SAM THOMPSON MAY 12, 1971
C
C     FIRST 2 CARDS CONTAIN ALPHAMERIC IDENTIFICATION OF EQUATION USED.
C     COEF = COEFFICIENT PREVIOUSLY CALCULATED FOR USE IN EQUATION.
C     POWER = EXPONENT USED IN EQUATION
C     DMEAN = MEAN DEVIATION
C     RMS = ROOT MEAN SQUARE DEVIATION
C     RATEC(I) = CALCULATED RATE
C     SUM2 = RESIDUAL SUM OF SQUARES
C     APD = MEAN PERCENT DEVIATION
C
      DIMENSION RATE(100),X(100),RATEC(100),DIFF(100),ID(160),IDATE(3)
      DOUBLE PRECISION ARUN
    1 FORMAT(A5,1X,3I2,9F7.0)
    2 FORMAT(10F8.0)
    3 FORMAT(8F10.0)
    4 FORMAT(1H1,' RUN NUMBER =',1X,A5,5X,3I3,/)
    5 FORMAT(80A1)
    6 FORMAT(' RESIDUAL SUM OF SQUARES =',E12.5,/,' MEAN PERCENT DEVIATI
     1ON =',F12.7)
    7 FORMAT(' X(I),GMS H2SO4/GM C     RATE, GMS H2SO4/GM C-MIN   CALCULA
     1TED RATE, GMS H2SO4/GM C-MIN          DIFF(I)',/)
    8 FORMAT(5X,F10.5,15X,F10.7,22X,F10.7,17X,F10.7)
    9 FORMAT(/,' MEAN DEVIATION =',F12.7,'   ROOT MEAN SQUARE DEVIATION
     1=',F12.7)
   10 FORMAT(/,5X,'      T=',F8.0,5X,'    XS=',F8.2,5X,' YSO2=',F8.5,5X,'
     1YO2=',F8.3,5X,' YH2O=',F8.3,/,5X,' -E/R=',F8.0,5X,'     A=',F8.3,5X
     2,'     B=',F8.3,5X,'     C=',F8.3,5X,'     D=',F8.3,/,5X,'     K=',F8.
     36,/)
   11 FORMAT(I5)
      MIN = 1
      MOUT = 3
      READ(MIN,5)(ID(I),I=1,80)
      READ(MIN,5)(ID(I),I=81,160)
      READ(MIN,3)RK,ER,A,B,C,D
   20 READ(MIN,1)ARUN,IDATE,XS,TFR,PCO2,PPMSO,PPMNO,PO2,PH2O,PH2SO,T
      IF(T)100,100,25
   25 WRITE(MOUT,4) ARUN,IDATE
      READ(MIN,5)
      WRITE(MOUT,5)(ID(I),I=1,80)
      WRITE(MOUT,5)(ID(I),I=81,160)
      YSO2 = PPMSO * 0.000001
      YO2 = PO2 * .01
      YH2O = PH2O * .01
      WRITE(MOUT,10)T,XS,YSO2,YO2,YH2O,ER,A,B,C,D,RK
      READ(MIN,11)N1
      READ(MIN,2)(X(I),I=1,N1)
      READ(MIN,2)(RATE(I),I=1,N1)
      READ(MIN,11)N2
      NCDS = N2 / 10
      KTRL = NCDS * 10 - N2
```

```
      IF(KTRL)30,40,30
   30 NCDS = NCDS + 1
   40 NCDS = NCDS + NCDS
      DO 45 I = 1,NCDS
      READ(MIN,2)
   45 CONTINUE
      SUM1 = 0.00
      SUM2 = 0.00
      SUM3 = 0.000000
      N11 = 0
      DO 50 I=1,N1
      X(I) = (X(I) / 1000.) * (PH2SO / 100.)
      RATEC(I)=RK*EXP(EP*(1./(T+460)))*(1.-X(I)/XS)**A
      RATEC(I)=RATEC(I)*(YSO2**B)*(YO2**C)*(YH2O**D)
      RATE(I) =(RATE(I) / 1000.) * (PH2SO / 100.)
      DIFF(I) = ABS(RATEC(I)-RATE(I))
      IF(X(I) - .01)50,50,48
   48 N11 = N11 + 1
      SUM1 = SUM1 + DIFF(I)
      SUM2 = SUM2 + DIFF(I)**2
      SUM3 = SUM3 + DIFF(I)/RATE(I)*100.
   50 CONTINUE
      DMEAN = SUM1 / N11
      RMS = SQRT(SUM2/N11)
      APD = SUM3 / N11
      WRITE(MOUT,7)
      WRITE(MOUT,8)(X(I),RATE(I),RATEC(I),DIFF(I), I=1,N1)
      WRITE(MOUT,9)DMEAN,RMS
      WRITE(MOUT,6) SUM2,APD
      GO TO 20
  100 CALL EXIT
      END
```

APPENDIX A-22-3

SO_2 SORBER DESIGN

DISK OPERATING SYSTEM/350 FORTRAN 360N-FO-451 CL 3-8

```
      REAL NCU
C
C     PROGRAM NUMBER C4762
C
C     DESIGNED BY G.N. BROWN
C
C     WRITTEN BY S.R. THOMPSON, JULY 14, 1971
C
C     SO2 SORBER DESIGN
C
      DIMENSION ID(10),IDATE(3),XV(50),YSO2(050),PSO2(050)
    1 FORMAT(10A1,4X,3I2,6F10.0)
    2 FORMAT(6F10.0)
    3 FORMAT(1H1,/,'      SO2 SORBER DESIGN',/,/,
     1' RUN NUMBER',10A1,'    DATE',3I3,/,/
     2' TOTAL CARBON RATE =',F7.3,' LBS/HR',/,
     3' OUTLET CARBON LOADING =',F8.5,' LBS ACID/LB CARBON',/,
     4' HEIGHT OF CARBON/STAGE =',F7.2,' INCHES',/,
     5' DIAMETER OF VESSEL =',F5.1,' INCHES')
    4 FORMAT(' CARBON USED =',F8.0,/,
     1' TOTAL GAS FLOW RATE =',F10.0,' SCFH',/,
     2' INLET SO2 CONCENTRATION =',F10.0,' PPM',/,
     3' INLET NO CONCENTRATION =',F10.0,' PPM',/,
     4' INLET O2 VOLUME FRACTION =',F8.4,/,
     5' INLET H2O VOLUME FRACTION =',F8.4)
    5 FORMAT(/,' TEMPERATURE =',F6.1,' DEG. F',/,
     1'                SO2 CONCENTRATION          ACID LOADING',/,
     2'      STAGE            PPM                LBS ACID/LB CARBON')
    6 FORMAT(5X,I4,F16.0,10X,F14.4)
    7 FORMAT(/,/,/,' TOTAL CARBON REQUIRED =',F10.2,' INCHES',/,
     1' TOTAL STAGES REQUIRED ASSUMING',F5.2,' INCHES CARBON/STAGE =',
     ' F5.2)
    8 FORMAT(' OUTLET SO2 CONCENTRATION =',F10.0,' PPM')
    9 FORMAT(/,' COMPENSATING FACTOR =',E12.5)
      MX = 3
      MY = 1
      READ(MY,2)RK,E3,A,B,C,D1,XVS
   10 READ(MY,1)ID,IDATE,NCU,QT,YSO2I,YSO2O,XVOUT,YO2
   11 FORMAT(/,' SPACE VELOCITY =',F10.0,' 1/HR')
   12 FORMAT(F9.2,F16.4,10X,F14.4)
   13 FORMAT(/,' PRESSURE DROP ACROSS CARBON =',F9.2,' INCHES H2O',
     1       /,' PRESSURE DROP ACROSS PLATES =',F9.2,' INCHES H2O',
     2       /,' TOTAL PRESSURE DROP ACROSS STAGES =',F9.2,' INCHES H2O'
     3)
   14 FORMAT(/,5X,'     T=',F8.0,5X,'    XS=',F8.2,5X,' YSO2=',F8.5,5X,'
     1YO2=',F8.3,5X,' YH2O=',  8X,/,5X,' -E/R=',F8.0,5X,'     A=',F8.3,5X
     2,'     B=',F8.3,5X,'     C=',F8.3,5X,'     D=',F8.3,/,5X,'     K=',F8.
     36,/)
   15 FORMAT(///,'     RATE EXPRESSION USED IN DESIGN CALCULATIONS',/,/,
     1' RATEC(I)=COEFF * (1-X(I)/XS)**A * (YSO2**B) * (YO2**C) * (YH2O**
     2D)',/,'     WHERE COEFF=K * EXP(-E/R*(1/(T+460)))')
C     CF = COMPENSATING FACTOR
      CF = 0.9000000
      IF(IDATE(1))500,500,20
```

```
   20 READ(MY,2)YH2O,PNO,H,D,T,RC
      XVOUT = XVOUT * (98./64.)
      QTS = QT * (492./530.)
      PSO2I = YSO2I/0.000001
      PSO2O = YSO2O / 0.000001
      I=1
      YSO2(I)=YSO2I
      PSO2(I)-YSO2(I)/0.000001
      XV(I)=XVOUT
      FA = QT * YSO2I / 386.0
      V = H/12. * (3.14159*D*D / (4.*144.))
      DO 100 M = 1,1
      I = 1
      CF = CF + 0.1000000
      P = 60.*36.*RK*EXP(ER/(T+460))
      P = P/98. * YO2**C * YH2O**D1
      P = P * CF
   30 AB = YSO2(I)**(1.-B)
      AC = (1.-B)*P*YSO2I*V*(1.-XV(I)/XVS)**A/FA
      AD = AB - AC
      IF(AD)65,65,35
   35 YSO2(I+1) = (AB-AC)**(1./(1.-B))
      XV(I+1)=XV(I)-(QT/386.)*(98./RC)*(YSO2(I)-YSO2(I+1))
      IF(XV(I+1))40,50,50
   40 XV(I+1)=0.000000
   50 PSO2(I+1)=YSO2(I+1)/0.000001
      IF(YSO2(I+1)-YSO2O)65,55,55
   55 I = I + 1
      GO TO 30
   65 M = 1
      N = I
      XVIN = XV(I)-(QT/386.)*(98./RC)*(YSO2(I)-YSO2O)
      IF(XVIN)67,68,68
   67 XVIN = 0.000000
   68 HT = FA*12.*4.*144./((1.-B)*P*YSO2I*(1.-XV(I)/XVS)**A)
      HT = HT*(YSO2(I)**(1.-B)-YSO2O**(1.-B))
      HT = HT/(3.14159*D*D)
      FRAC = HT/H
      STAGE = I + FRAC
      TCR = I*H+HT
      SV = QTS / (V*STAGE)
      DPAC = TCR * 0.5
      DPAP = TCR * 0.25
      TDP = DPAC + DPAP
      WRITE(MX,3)ID,IDATE,RC,XVOUT,H,D
      WRITE(MX,4)NCU,QTS,PSO2I,PNO,YO2,YH2O
      WRITE(MX,8)PSO2O
      WRITE(MX,5)T
      DO 70 K=1,N
      WRITE(MX,6)K,PSO2(K),XV(K)
   70 CONTINUE
      WRITE(MX,12) FRAC,PSO2O,XVIN
      WRITE(MX,7)TCR,H,STAGE
      WRITE(MX,11) SV
      WRITE(MX,13)DPAC,DPAP,TDP
      WRITE(MX,15)
      WRITE(MX,14)T,XVS,YO2,YH2O,ER,A,B,C,D1,RK
  100 CONTINUE
      GO TO 10
  500 CALL EXIT
      END
```

APPENDIX A-22-4

SO_2 SORPTION RATE COMPUTER PROGRAM - BENCH SCALE

```
                    DISK OPERATING SYSTEM/360 FORTRAN    360N-FO-451  CL 3-8

C
C     CALCULATION OF SO2 SORPTION RATE
C
C     WRITTEN BY SAM THOMPSON, FEB. 26, 1971
C
C     DESIGNED BY G. N. BROWN
C
C     AREA(J) = AREA UNDER CURVE FROM TIME = I TO TIME = I+1
C     X(J) = SO2 LOADINGS
C     SUMX(J) = CUMULATIVE TOTAL OF SO2 LOADINGS
C     DXDT(J) = RATE OF SO2 SORPTION
      REAL NOF,NOM
      DIMENSION IDATE(3),T(50),Y(50),X(50),SUMX(50),AREA(50),DXDT(50)
      DIMENSION L(80)
C
    1 FORMAT(3I2,I4)
    2 FORMAT(1H1)
    3 FORMAT(18X,' SO2 SORPTION RATE',10X,3I3,/)
    4 FORMAT(/,' TEMPERATURE =',F12.6,' F',/,' SPACE VELOCITY =',E16.6,'
     1 /HR',/,' INLET SO2 MOLE FRACTION (DRY) =',F12.6,5X,' (WET) =',F12
     2.6,/,' INLET H2O MOLE FRACTION =',F12.6,/,' INLET OXYGEN MOLE FRAC
     3TION =',F12.6,/,' INLET CO2 MOLE FRACTION =',F12.6,/,' INLET NO MO
     4LE FRACTION =',F12.6,/,' INLET INERT GAS MOLE FRACTION =',F12.6,/,
     5' INLET CARBON WEIGHT =',F12.6,' GMS')
    5 FORMAT(/,'    TIME       MOLE FRACTION SO2       H2SO4 LOADING    RATE O
     1F H2SO4 SORPTION',/,33X,' GMS ACID/GM C       GMS ACID/GM C-MIN',/)
    6 FORMAT(F10.0,E10.0)
    7 FORMAT(F7.0,4X,E15.6,6X,E15.6,5X,E15.6)
    8 FORMAT(10F8.0)
    9 FORMAT(' TOTAL GAS FLOW =',F12.6,' SCFH',/)
   10 FORMAT(/,' AVERAGE RATE OF SO2 SORPTION =',E16.6)
   11 FORMAT(80A1)
C
      INP = 1
   15 READ(INP,1)(IDATE(I),I=1,3),NOBS
C     IDATE(I) = NUMERIC CODE FOR MONTH, DAY AND YEAR OF RUN.
C     NOBS = NUMBER OF OBSERVATION POINTS.
      IF(NOBS)20,500,20
   20 WRITE(3,2)
      READ(INP,8)WC,CONC,TEMP,O2F,CO2F,NOF,H2OF,SO2F,GASF
C     WC = INLET WEIGHT OF CARBON, GMS.
C     CONC = INLET SO2 MOLE FRACTION
C     TEMP = TEMPERATURE, F.
C     O2F = INLET OXYGEN FLOW RATE, SCFH
C     CO2F = INLET CO2 FLOW RATE, SCFH
C     NOF = INLET NO FLOW RATE, SCFH, SCFH
C     H2OF = INLET H2O FLOW RATE, SCFH
C     SO2F = INLET SO2 FLOW RATE, SCFH
C     GASF = INLET INERT GAS FLOW RATE, SCFH
      WRITE(3,3)(IDATE(I),I=1,3)
      READ(INP,11)(L(I),I=1,80)
      WRITE(3,11)(L(I),I=1,80)
      TGFR = O2F + CO2F + NOF + H2OF + SO2F + GASF
C     TGFR = TOTAL GAS FLOW RATE
```

```
      SPCVL = TGFR / WC * 0.1699E05
C     SPCVL = SPACE VELOCITY
      H2OC = H2OF / TGFR
C     H2OC = INLET WATER MOLE FRACTION
      CONCW = CONC * (1.-H2OC)
C     CONCW = INLET SO2 MOLE FRACTION ON A WET BASIS
      O2M = O2F / TGFR
C     O2M = INLET O2 MOLE FRACTION
      CO2M = CO2F / TGFR
C     CO2M = INLET CO2 MOLE FRACTION
      NOM = NOF / TGFR
C     NOM = INLET NO MOLE FRACTION
      GASM = GASF / TGFR
C     GASM = INERT GAS MOLE FRACTION
      WRITE(3,4)TEMP,SPCVL,CONC,CONCW,H2OC,O2M,CO2M,NOM,GASM,WC
      WRITE(3,9)TGFR
      WRITE(3,5)
      SPCVL = SPCVL/60.
      READ(INP,6)(T(I),Y(I),I=1,NOBS)
      AREA(1) = 0.00000
      X(1) = 0.00000
      SUMX(1) = 0.00000
      DXDT(1) = 0.00000
      N = NOBS
      DO 50 J=2,N
      I = J-1
      AREA(J) =((T(J)-T(I))/2.) * (Y(J)+Y(I))
      X(J) =7.319E-3 * SPCVL * (CONC * (T(J)-T(I))-AREA(J))*(1.-H2OC)
      SUMX(J) = SUMX(I) + X(J)
      DXDT(J) =7.319E-3 * SPCVL *(CONC - Y(J))*(1.-H2OC)
   50 CONTINUE
      DO 70 I=1,N
      WRITE(3,7) T(I),Y(I),SUMX(I),DXDT(I)
   70 CONTINUE
      AVER = 0.000000
      DO 100 J=2,N
      I = J-1
      AVER = AVER + (DXDT(J) * (T(J) - T(I)))
  100 CONTINUE
      AVER = AVER / T(N)
      WRITE(3,10) AVER
      GO TO 15
  500 STOP
      END
```

APPENDIX A-22-5

SULFUR GENERATION RATE COMPUTER PROGRAM - BENCH SCALE

DISK OPERATING SYSTEM/360 FORTRAN 360N-FO-451 CL 3-8

```
C
C     CALCULATION OF RATE OF SULFUR GENERATION, BENCH SCALE.
C
C     WRITTEN BY SAM THOMPSON, FEB. 25, 1971
C
C     DESIGNED BY G. N. BROWN
C
C     Y(I) = MOLAR CONCENTRATION OF H2S
C     AREA(J) = AREA UNDER CURVE FROM TIME = I TO TIME = I+1
C     X(J) = SULFURIC ACID LOADING
C     DXDT(J) = RATE OF SULFUR FORMATION
      DIMENSION IDATE(3),T(50),YH2S(50),YSO2(50),YCO2(50),Y(50),AREA(50)
      DIMENSION X(50),DXDT(50),L(80)
      INP = 1
   15 READ(INP,1)(IDATE(I),I=1,3),NOBS
    1 FORMAT(3I2,I4)
C     IDATE(I) = NUMER CODES FOR MONTH, DAY AND YEAR
C     NOBS = NUMBER OF OBSERVATIONS
      IEXIT = 1
      IF(NOBS)20,500,20
   20 WRITE(3,2)
    2 FORMAT(1H1)
    8 FORMAT(10F8.0)
      READ(INP,8)QI,WC,WL,YI,SAL,TI,TM,TF,FH2S,H2SF
C     QI = INERT GAS FLOW RATE
C     WC = WEIGHT OF CARBON
C     WL = FINAL WEIGHT OF LOADED CARBON, GMS.
C     YI = INLET PERCENT H2S
C     SAL = INLET SULFURIC ACID LOADING
C     TI = INITIAL TEMPERATURE, FARENHEIT.
C     TM = MAXIMUM TEMPERATURE, FARENHEIT.
C     TF = FINAL TEMPERATURE, FARENHEIT.
C     FH2S = FINAL OUTLET SULFUR LOADING ON CARBON, PERCENT.
C     H2SF = INLET H2S FLOW RATE, SCC/MIN.
      FL = (FH2S * WL) / (100. * WC)
C     FL = FINAL OUTLET SULFUR
      SPCVL = 36. * (QI + H2SF) / WC
C     SPCVL = SPACE VELOCITY
      CONC = YI / (100. - YI)
C     CONC = INLET MOLAR H2S CONCENTRATION
      WRITE(3,3)(IDATE(I),I=1,3)
    3 FORMAT(47X,' RATE OF SULFUR GENERATION',10X,3I3,/,53X,' BENCH SCAL
     1E',/)
      READ(INP,12)(L(I),I=1,80)
   12 FORMAT(80A1)
      WRITE(3,12)(L(I),I=1,80)
      WRITE(3,4)SPCVL,QI,WC,WL,YI,CONC,SAL,FH2S
    4 FORMAT(/,' SPACE VELOCITY =',E16.6,' /HR',/,' INERT GAS FLOW RATE
     1=',F12.2,' SCC/MIN',/,' WEIGHT OF CARBON, UNLOADED =',F12.3,' GMS'
     2,5X,' LOADED =',F12.2,' GMS',/,/,' INLET PERCENT H2S =',F12.3,/,'
     3INLET MOLAR H2S CONCENTRATION =',F12.6,' MOLES H2S/MOLE INERT GAS'
     4,/,' INLET SULFURIC ACID LOADING =',F12.6,' GMS H2SO4/GM CARBON,'/
     5,/,' FINAL OUTLET PERCENT SULFUR LOADING ON CARBON =',F12.3)
      WRITE(3,9)FL,TI,TM,TF
```

```
    9 FORMAT(' FINAL OUTLET SULFUR LOADING ON CARBON =',F12.3,' GMS S/GM
     1 CARBON',/,' INITIAL TEMPERATURE =',F12.2,' F',/,' MAXIMUM TEMPERA
     2TURE =',F12.2,' F',/,' FINAL TEMPERATURE =',F12.2,' F',/)
      DO 30 I=1,NOBS
      READ(INP,5) T(I),YH2S(I),YSO2(I),YCO2(I)
    5 FORMAT(4F10.0)
      X(1) = SAL
   30 CONTINUE
      DO 40 I=1,NOBS
      Y(I) = YH2S(I) / (100. - (YH2S(I)+YCO2(I)+YSO2(I)))
   40 CONTINUE
      DO 60 J= 2,NOBS
      I= J-1
      AREA(J) =((T(J)-T(I))/2.)* (Y(I)+Y(J))
      X(J)= X(I)-(1.458E-3 *(QI/WC) * (CONC*(T(J)-T(I)) - AREA(J)))
      DXDT(J) = -1.458E-3*(QI/WC)*(CONC-Y(J))
   60 CONTINUE
      DXDT(1) = 0.00000
      AREA(1) = 0.00000
      DO 65 J=2,NOBS
      I = J - 1
      IF(X(J)/SAL - 0.1)63,63,65
   63 TS = T(I)+(T(J)-T(I)) * ((0.1*SAL-X(I))/(X(J)-X(I)))
      DXDTS = DXDT(I) + (TS-T(I))/(T(J)-T(I)) * (DXDT(J)-DXDT(I))
      XS = 0.1 * SAL
      K = I
      GO TO 68
   65 CONTINUE
      IEXIT = 2
      GO TO 75
   68 AVER = 0.00000
      DO 70 J=2,K
      I = J - 1
      AVER = AVER + (DXDT(J) * (T(J) - T(I)))
   70 CONTINUE
      AVER = AVER + (DXDTS * (TS - T(K)))
      AVER = AVER / TS
   75 WRITE(3,6)
    6 FORMAT(/,' TIME      PERCENT H2S',7X,' PERCENT SO2',7X,' PERCENT CO
     12      MOLAR CONC H2S       H2SO4 LOADING     RATE ACID DECOMP.')
      WRITE(3,11)
   11 FORMAT(83X,' GMS ACID/GM C     GM ACID/GM C-MIN.',/)
      DO 80 I=1,NOBS
      WRITE(3,7) T(I),YH2S(I),YSO2(I),YCO2(I),Y(I),X(I),DXDT(I)
    7 FORMAT(F5.1,E16.6,5(3X,E16.6))
   80 CONTINUE
      GO TO (85,15),IEXIT
   85 WRITE(3,10)XS,TS,DXDTS,TS,AVER
   10 FORMAT(/,' ACID LOADING =',E16.6,' AT',E16.6,' MINUTES',/,' RATE O
     1F ACID DECOMPOSITION =',E16.6,' AT',E16.6,' MINUTES',/,' AVERAGE R
     2ATE OF ACID DECOMPOSITION UP TO 90 PERCENT ACID UTILIZATION =',E16
     3.6)
      GO TO 15
  500 STOP
```

APPENDIX A-22-6

COMPUTER PROGRAM FOR GRAVIMETRIC FLOW EXPERIMENT CALCULATIONS

```
                    DISK OPERATING SYSTEM/360 FORTRAN   360N-FO-451  CL 3-8
C
C     PROGRAM NUMBER C4769
C
C     CALCULATIONS FOR GRAVIMETRIC FLOW EXPERIMENTS
C
C     DESIGNED BY JAN K. EVANS AND G.N. BROWN
C
C     WRITTEN BY S.R. THOMPSON, 9/9/71
      DOUBLE PRECISION ARUN
      DIMENSION DRA(200),ALOAD(200),ALOADA(200),PICKUP(200)
      DIMENSION IDATE(3),TIME(200),AMASS(200),CHART(200),DR(200)
    1 FORMAT(1H1,/,10X,' CALCULATIONS FOR GRAVIMETRIC FLOW EXPERIMENTS',
     1/)
    2 FORMAT(A5,1X,3I2)
    3 FORMAT(80H
     1                                                                )
    4 FORMAT(9F8.0,4X,I4)
    5 FORMAT(/,'   RUN NO. =',A5,10X,' SO2 =',F7.0,' PPM',5X,' TEMP =',
     1F7.0,' DEG. F.',/,5X,' DATE =',3I3,6X,' NO =',F7.0,' PPM',5X,' FLT
     2) =',F7.0,' CC/MIN',/,'    DRY WT.=',F7.2,' MG',5X,' O2 =',F7.1,'
     3%',6X,' H2SO4 =',F7.2,' %',/,' CORRECTION=',F7.2,' MG',4X,' H2O ='
     4,F7.1,' %',/,/)
    6 FORMAT(4(3X,F5.0,2F6.0))
    7 FORMAT(F15.5,5X,F16.5,4X,F16.5,4X,F16.5)
    8 FORMAT(4X,' MEAN LOAD',7X,' DIFFERENTIAL RATE',7X,' MEAN LOAD',8X,
     1' DIFFERENTIAL RATE',/,' GMS SO2/100 GMS C     MGM SO2/GM C-MIN
     2 GMS ACID/100 GMS C     MGM ACID/GM C-MIN',/)
    9 FORMAT(6X,' TIME',14X,' MASS DIAL',13X,' CHART',15X,' PICKUP',/,
     15X,' (MIN)',37X,' INCHES',12X,' (MG H2SO4)',/)
   10 FORMAT(F11.2,10X,F13.2,10X,F10.2,8X,F15.5)
      MX=3
      MY=1
   20 READ(MY,2)ARUN,IDATE
      IF(IDATE(1))100,100,30
   30 WRITE(MX,1)
      READ(MY,3)
      WRITE(MX,3)
      READ(MY,4)DW,DF,SO2,CNO,O2,H2O,T,FR,H2SO4,N
      WRITE(MX,5)ARUN,SO2,    T,IDATE,CNO,FR,DW,O2,H2SO4,DF,H2O
C     ARUN   = RUN NUMBER
C     IDATE  = DATE OF RUN
C     DW     = DRY WEIGHT
C     DF     = DEFLECTION (CORRECTION)
C     SO2    = SO2 CONCENTRATION, PPM
C     CNO    = NO  CONCENTRATION, PPM
C     O2     = O2  CONCENTRATION, PPM
C     H2O    = H2O CONCENTRATION, PPM
C     T      = TEMPERATURE, DEGREES F.
C     FR     = FLOW RATE
C     H2SO4  = % H2SO4
C     N      = NUMBER OF DATA POINTS
      READ(MY,6)(TIME(I),AMASS(I),CHART(I),I=1,N)
      HK = (H2SO4/100.)*(64./98.)
      DO 50 I=1,N
      PICKUP(I) = AMASS(I)*200.0 + CHART(I) + DF - DW
```

```
   50 CONTINUE
      WRITE(MX,8)
      N1 = N-1
      DO 60 J = 1,N1
      DR(J) = (PICKUP(J+1)-PICKUP(J))/(TIME(J+1)-TIME(J))
      DR(J) = DR(J)*(1000./DW)*HK
      ALOAD(J) = (PICKUP(J+1)+PICKUP(J))/(2.*DW)*(HK*100.)
      DRA(J) = DR(J)*(98./64.)
      ALOADA(J) = ALOAD(J)*(98./64.)
      IF(DR(J))60,55,55
   55 WRITE(MX,7) ALOAD(J),DR(J),ALOADA(J),DRA(J)
   60 CONTINUE
      WRITE(MX,1)
      WRITE(MX,5)ARUN,SU2,    T,IDATE,CNO,FR,DW,O2,H2SO4,DF,H2O
      WRITE(MX,9)
      DO 70 I = 1,N
      WRITE(MX,10) TIME(I),AMASS(I),CHART(I),PICKUP(I)
   70 CONTINUE
      GO TO 20
  100 CALL EXIT
      END
```

APPENDIX A-22-7

COMPUTER PROGRAM FOR CALCULATION OF DIFFERENTIAL SORPTION RATE AND MODEL EVALUATION

CALCULATION OF DIFFERENTIAL SORPTION RATE AND MODEL EVALUATION

DISK OPERATING SYSTEM/360 FORTRAN 360N-FO-451 CL 3-8

```
      DIMENSION IDATE(3),X(50),RATE(50),AMSON(50),AVCOY(50),AVCOX(50),
     1TRACY(50),TRACX(50),WVACO(50),WMOD(50)
      DIMENSION AJOST(70),XPRIM(70),TIME(70)
      MIN = 1
      MOUT = 3
   20 READ(MIN,1)NRUN,IDATE,XS,TFR,PCO2,PPMSO,PPMNO,PO2,PH2O,PH2SO,T
    1 FORMAT(I5,1X,3I2,9F7.0)
      IF(NRUN)100,100,25
C     NRUN = RUN NUMBER
C     IDATE = DATE OF RUN
C     XS = CONSTANT, GMS H2SO4/GMC
C     TFR = TOTAL FLOW RATE, CC/MIN
C     PCO2 = PERCENT CO2
C     PPMSO = CONCENTRATION OF SO2, PPM
C     PPMNO = CONCENTRATION OF NO, PPM
C     PO2 = PERCENT O2
C     PH2O = PERCENT H2O
C     T = TEMPERATURE, F
C     PH2SO = PERCENT H2SO4
   25 WRITE(MOUT,2)
    2 FORMAT(1H1)
      READ(MIN,3)
    3 FORMAT(80H
     1                                        )
      WRITE(MOUT,3)
    4 FORMAT(10F8.0)
      READ(MIN,1) N1
      READ(MIN,4)(X(I),I=1,N1)
      READ(MIN,4)(RATE(I),I=1,N1)
      READ(MIN,1) N2
      READ(MIN,4)(TIME(I),I=1,N2)
      READ(MIN,4)(XPRIM(I),I=1,N2)
C     X(I) = MEAN LOAD (MG H2SO4/GM C)
C     RATE(I) = UNCORRECTED RATE (MG H2SO4/GM C/MIN)
C     TIME(I) = TIME(MIN.)
C     XPRIM(I) = MEAN LOAD PRIME (MG H2SO4/GM C/MIN)
      WVACX=ALOG(PPMSO * .000001)
      DO 40 I=1,N1
      X(I) = (X(I)/1000.) * (PH2SO/100.)
C     X(I) NOW EQUALS LOAD AS H2SO4, GMS H2SO4/GM C
      RATE(I) = (RATE(I)/1000.) * (PH2SO/100.)
C     RATE(I) NOW EQUALS RATE CORRECTED, GMS H2SO4/GM C-MIN
      AMSON(I) = RATE(I)/(PPMSO*.000001)
      AVCOY(I) = 1. / AMSON(I)
      AVCOX(I) = (1.- (X(I)/XS))**.3333333
      TRACY(I) = ALOG(AMSON(I))
      TRACX(I) = ALOG(1.-X(I)/XS)
      WVACO(I) = ALOG(RATE(I) / (1.-X(I)/XS))
      WMOD(I) = ALOG(RATE(I)/(1.-X(I)/XS)**2)
   40 CONTINUE
      DO 50 I = 1,N2
      XPRIM(I) = (XPRIM(I)/1000.) * (PH2SO/100.)
C     XPRIM(I) NOW EQUALS LOAD AS H2SO4 PRIME, GMS H2SO4/GM C
      AJOST(I) = (PPMSO * TIME(I) *.000001) / XPRIM(I)
```

```
   50 CONTINUE
      WRITE(MOUT,5)NRUN,IDATE,T,TFR,PCO2,PO2,PH2O,PPMSO,PPMNO,PH2SO,XS
    5 FORMAT(/,' RUN NUMBER =',I5,5X,3I3,/,' TEMPERATURE ='F5.0,' DEG F'
     1,/,/,' TOTAL FLOW RATE =',F7.1,' CC/MIN',/,/,' PERCENT CO2 =',F7.1
     2,/,' PERCENT  O2 =',F7.1,/,' PERCENT H2O =',F7.1,/,/,' CONCENTRATI
     3ON SO2 =',F7.1,' PPM',/,' CONCENTRATION  NO =',F7.1,' PPM',/,/,' P
     4ERCENT H2SO4 =',F7.2,/,' SATURATED LOADING =',F7.2,' GMS H2SO4/GM
     5C',/,/,' X, GMS H2SO4/GM C        RATE, GMS H2SO4/GM C-MIN')
      WRITE(MOUT,6)(X(I),RATE(I),I=1,N1)
    6 FORMAT(F15.5,10X,5X,F15.5)
      WRITE(MOUT,7) NRUN,IDATE
    7 FORMAT(1H1,' RUN NUMBER =',I5,5X,3I3,/)
      WRITE(MOUT,8)
    8 FORMAT(' X, GMS H2SO4/GM C     AMUNDSON      ')
      WRITE(MOUT,9)(X(I),AMSON(I),I=1,N1)
    9 FORMAT(F15.5,F14.5)
      WRITE(MOUT,7) NRUN,IDATE
      WRITE(MOUT,15)
   15 FORMAT(' XPRIME, GMS H2SO4/GM C          JOST ')
      WRITE(MOUT,16)(XPRIM(I),AJOST(I),I=1,N2)
   16 FORMAT(F15.5,5X,F15.5)
      WRITE(MOUT,7) NRUN,IDATE
      WRITE(MOUT,10)
   10 FORMAT('            AVCOX                    AVCOY')
      WRITE(MOUT,16)(AVCOX(I),AVCOY(I),I=1,N1)
      WRITE(MOUT,7) NRUN,IDATE
      WRITE(MOUT,11)
   11 FORMAT('          TRACORX                 TRACORY')
      WRITE(MOUT,16)(TRACX(I),TRACY(I),I=1,N1)
      WRITE(MOUT,7) NRUN,IDATE
      WRITE(MOUT,12)WVACX
   12 FORMAT(' LN(PPMSO2) =',F10.5)
      WRITE(MOUT,13)
   13 FORMAT('          WESTVACO    MODWESTVACO')
      WRITE(MOUT,14)(WVACO(I),WMOD(I),I=1,N1)
   14 FORMAT(F15.5,F15.5)
      GO TO 20
  100 CALL EXIT
      END
```

APPENDIX A-22-8

COMPUTER PROGRAM FOR MATERIAL BALANCE RATE CALCULATIONS AND SPACE VELOCITY FOR 6" SO_2 SORBER

```
                    DISK OPERATING SYSTEM/360 FORTRAN   360N-FO-451  CL 3-8
C
C     PROGRAM NUMBER C4765
C
C     MATERIAL BALANCE, RATE CALCULATIONS, AND SPACE VELOCITY FOR
C        6'' SO2 SORBER.
C
C     DESIGNED BY G.N. BROWN - WRITTEN BY SAM THOMPSON, JUNE 1971.
C
C     NTYPE = 1 TO DETERMINE TOTAL SULFUR
C           = 2 TO DETERMINE SO2 AS ACID
C     WSC   = % S ON VIRGIN CARBON                PERCENT
C     XSIN  = SO2 LOADING ON CARBON IN            #SO2/#C
C     XSOUT =  ''   ''   ''  ''   OUT             #SO2/#C
C     SOUT  = % S ON OUTLET MATERIAL              PERCENT
C     RTOUT = TOTAL OUTLET MATERIAL RATE          #/HR
C     SIN2  = INLET SO2 CONCENTRATION             PPM
C     SOUT2 = OUTLET '' .  ''                     PPM
C     QT    = TOTAL INLET GAS RATE                SCFH
C     T     = TEMPERATURE                         FARENHEIGHT
C     VPT   = VAPOR PRESSURE CORRECTION           PSI
C     D     = DIAMETER OF COLUMN                  INCHES
C     W     = REACTION RATE CONSTANT
C     Z     = ORDER OF SO2 CONSTANT
C     H     = HEIGHT OF CARBON PER STAGE          INCHES
C     PCO2  =                                     PERCENT
C     PCH2O =                                     PERCENT
C     CONO  =                                     PPM
C     PCCO2 =                                     PERCENT
C     FV    = FRACTION OF ACID ON CARBON
      DIMENSION ID(10),IDATE(3),YSO2(10),ARAF(10),APKUP(10),ALEAV(10),
     1ALOAD(10),CONC(10),VCT(10),SPACE(10),ACTUL(10)
    1 FORMAT(10A1,3I2,I4,F10.0)
    2 FORMAT(10F8.0)
    3 FORMAT(     ' RUN NUMBER ',10A1,'   CARBON ',F10.0,/,
     1            ' DATE ',3I3,/,/,
     2            ' INLET % SULFUR ON CARBON    =',F10.2,' %',/,
     3            ' OUTLET % SULFUR ON CARBON   =',F10.2,' %',/,
     4            ' INLET SO2 LOADING ON CARBON =',F10.4,' LBS SO2/LB C')
    4 FORMAT(' OUTLET SO2 LOADING ON CARBON=',F10.4,' LBS SO2/LB C',/,/,
     1        ' SO2 CONCENTRATION IN INLET GAS =',F10.0,' PPM',/,
     2        ' SO2 CONCENTRATION IN OUTLET GAS=',F10.0,' PPM',/,/,
     3        ' VOLUME % H2O =',F05.1,' %',/,
     4        ' VOLUME % O2  =',F05.1,' %')
    5 FORMAT(' CONCENTRATION OF NO=',F10.1,' PPM',//' TOTAL GAS FLOW RATE
     1=',F10.1,' SCFH'/' LINEAR GAS VELOCITY =',F10.1,' FT/SEC',/,/,
     2        ' TEMPERATURE          =',F10.1,' DEG F',/,/,/,' TOTAL SPACE V
     3FLOCITY =',F10.0,' 1/HR',/,/)
    6 FORMAT(' POUNDS SULFUR INTO REACTOR  =',F10.4,' LBS/HR',/,
     1        ' POUNDS SULFUR OUT OF REACTOR=',F10.4,' LBS/HR',/,/,
     2        ' % SULFUR ACCOUNTED FOR       =',F10.1,' %',/,/)
    7 FORMAT(1H1,' MATERIAL BALANCE FOR SO2 SORPTION',/,/)
    8 FORMAT(1H1,' CALCULATION OF RATE OF SO2 SORPTION FROM',/,
     1                 FLUIDIZED BED REACTOR          ',/,/)
    9 FORMAT(1H1,' COMPARISON OF SPACE VELOCITY CALCULATED FROM',/,
```

```
     1              '    DIFFERENTIAL BED RATE DATA VERSUS THAT'/,
     2              '    CALCULATED FROM FLUIDIZED BED REACTOR'/,/)
   10 FORMAT('          AVG ACID LOADING    AVERAGE SO2    AVERAGE RATE OF'/
     1          '       LBS H2SO4/LB C    CONCENTRATION   ACID FORMATION'/
     2          ' STAGE                          PPM        LBS H2SO4/LB C-MIN
     3',/)
   11 FORMAT(I4,F15.4,F17.0,F17.5)
   12 FORMAT('          ACTUAL SPACE VELOCITY    CALCULATED SPACE VELOCITY
     1',/,    ' STAGE          1/HR                          1/HR'/)
   13 FORMAT(I4,4X,F14.0,13X,F14.0)
      MX = 1
      MY = 3
      NSTGE = 8
   20 READ(MX,1)(ID(I),I=1,10),(IDATE(J),J=1,3),NTYPE,CARBN
      PI = 3.14159265
      NSTG1 = NSTGE + 1
      IF(NTYPE)300,300,25
   25 READ(MX,2)FV,WSC,XSIN,XSOUT,SOUT,RTOUT,SIN2,SOUT2,QT,T
      READ(MX,2)VPT,D,W,Z,H,PCO2,PCH2O,CONO
      READ(MX,2)(YSO2(I),I=1,NSTG1)
C
C          ***** MATERIAL BALANCE *****
C
      FAC1 = ((1-(PCH2O/100))/(1-(VPT/14.7)))
      GO TO(30,40),NTYPE
   30 XSOUT= 100*SOUT - (WSC*(100-SOUT))
      XSOUT= XSOUT/((100-((3.06 * SOUT)/FV))*50)
      FCOUT = 100 / (100+WSC+(153*XSOUT/FV))
      SFIN=QT/359*SIN2*0.000001*32*FAC1+RTOUT*FCOUT*(WSC/100)
      SFOUT=QT/359*SOUT2*.000001*32*FAC1+RTOUT*(SOUT/100)
      GO TO 50
   40 FCOUT = 100 / (100 + WSC + (153*XSOUT/FV))
      SOUT = XSOUT * .5 * 100 / (1 + XSOUT * (98/64))
      SFIN=QT/359*SIN2*0.000001*32*FAC1+RTOUT*FCOUT*((WSC/100)+(XSIN/2))
C     SFIN  = SULFUR IN
      SFOUT=QT/359*SOUT2*.000001*32*FAC1
      SFOUT=SFOUT + RTOUT*FCOUT*((WSC/100)+(XSOUT/2))
C     SFOUT = SULFUR OUT
   50 PCMAF= SFOUT/SFIN*100
C     PCMAF = PERCENT MATERIAL ACCOUNTED FOR
C
C          ***** RATE CALCULATIONS *****
C
      SUMAP = 0.00000
      DO 100 I=1,NSTGE
      ARAF(I) = (48*144*0.000001*98)/(359*PI*36*60)
      ARAF(I) = ARAF(I)*(((YSO2(I+1)-YSO2(I))*QT)/(D**2 * H))
      ARAF(I) = ARAF(I) * FAC1
C     ARAF(I) = AVERAGE RATE OF ACID FORMATION
      APKUP(I) = QT*0.000001 * (YSO2(I+1)-YSO2(I)) * 98
      APKUP(I) = APKUP(I) / (359 * RTOUT * FCOUT)
C     APKUP(I) = ACID PICKUP
      SAVE = SUMAP
      SUMAP = SUMAP + APKUP(I)
```

```
      ALEAV(I) = 98*XSIN/64+SUMAP
C     ALEAV(I) = TOTAL ACID LEAVING PARTICULAR STAGE
      ALOAD(I) = 98* XSIN / 64 + SAVE + (APKUP(I))
C     ALOAD(I) = AVERAGE LOADING ON STAGE I
      CONC(I)=(YSO2(I+1)+YSO2(I))/2 * FAC1
C     CONC(I) = AVERAGE SO2 CONCENTRATION
  100 CONTINUE
      U =  (QT*4*144)/(PI*D**2*3600) * ((460+T)/492)
C     U = LINEAR GAS VELOCITY AT T
      CONCI = SIN2 * FAC1
C     CONCI = SO2 CONCENTRATION IN INLET GAS (CORRECTED)
      CONCO = SOUT2 * FAC1
C     CONCO = SO2 CONCENTRATION IN OUTLET GAS (CORRECTED)
C
C             ***** SPACE VELOCITY *****
C
      DO 130 I=1,NSTGE
      VQT(I)=SIN2*98*.000001*FAC1/(36*90*359*W*(1-(ALOAD(I)/.38))*(1-Z))
      VQT(I)=VQT(I)*((1-YSO2(I)/SIN2)**(1.-Z)-(1-YSO2(I+1)/SIN2)**(1-Z))
      SPACE(I) = 1.0 / VQT(I)
C     SPACE(I) = SPACE VELOCITY
      ACTUL(I) = 4*144*12*QT / (PI*D**2*H)
C     ACTUL(I) = ACTUAL SPACE VELOCITY
  130 CONTINUE
      TACTL = ACTUL(1) / NSTGE
      NPAGE = 0
  140 NPAGE = NPAGE + 1
      GO TO (141,142,143,20),NPAGE
  141 WRITE(MY,7)
      GO TO 145
  142 WRITE(MY,8)
      GO TO 145
  143 WRITE(MY,9)
  145 WRITE(MY,3)ID,CARBN,IDATE,WSC,SOUT,XSIN
      WRITE(MY,4)XSOUT,CONCI,CONCO,PCH2O,PCO2
      WRITE(MY,5)COND,QT,U,T,TACTL
      GO TO(150,160,180),NPAGE
  150 WRITE(MY,6)SFIN,SFOUT,PCMAF
      GO TO 140
  160 WRITE(MY,10)
      DO 170 I=1,NSTGE
      WRITE(MY,11)I,ALOAD(I),CONC(I),ARAF(I)
  170 CONTINUE
      OVERL = (48*144*0.000001*98)/(359*PI*36*60)
      OVERL = OVERL * (((SIN2-SOUT2)*QT)/(D**2*H))
      OVERL = OVERL * FAC1 / 8.0
C     OVERL = OVERALL RATE OF ACID FORMATION
      WRITE(MY,14) OVERL
   14 FORMAT(/,/,/,/,/,/,/,/,/,/,/,/,/,' OVERALL RATE OF ACID FORMATION ='
     1,E17.5)
      GO TO 140
  180 WRITE(MY,12)
      DO 190 I=1,NSTGE
      WRITE(MY,13)I,ACTUL(I),SPACE(I)
  190 CONTINUE
      GO TO 20
  300 CALL EXIT
      END
```

APPENDIX A-22-9

COMPUTER PROGRAM FOR CALCULATION OF INTEGRATED PILOT PLANT RESULTS OF WESTVACO SO_2 RECOVERY PROCESS FROM STEADY STATE DATA

```
                    DISK OPERATING SYSTEM/360 FORTRAN   360N-FO-451  CL 3-8

      INTEGER DAY,YR,THO,TMO
      DIMENSION T(12),HCLD(12),D(20),AV(45),B(26),UNIT(13,4),RLAB(7,3),
     1R(7)
      EQUIVALENCE (AV(1),AY10A),(AV(2),AY16A),(AV(3),AY10D),(AV(4),ADP10
     1),(AV(5),ATL10),(AV(6),WD11),(AV(7),WD12),(AV(8),WCW12),(AV(9),AD1
     21A),(AV(10),AD12A),(AV(11),AZ301A),(AV(12),AZ301B),(AV(13),WD301),
     3(AV(14),AD301A),(AV(15),AY200B),(AV(16),AY206B),(AV(17),AY200C),
     4(AV(18),AY206C),(AV(19),AY200D),(AV(20),AY206D),(AV(21),AY200E),(A
     5V(22),AY206E),(AV(23),AG200E),(AV(24),AZ302A),(AV(25),AZ200A),(AV(
     626),AZ302B),(AV(27),AZ200B),(AV(28),AZ200C),(AV(29),AY100C),(AV(30
     7),AY108C),(AV(31),AY100E),(AV(32),AY108E),(AV(33),AY108B),(AV(34),
     8AY108D),(AV(35),AG100E),(AV(36),WD101),(AV(37),WD102),(AV(38),
     9AD101A),(AV(39),AD102A),(AV(40),AZ90A),(AV(41),AZ90B),(AV(42),AC90
     1A),(AV(43),WS401),(R(1),RD11),(R(2),RD12),(R(3),RCW12),(R(4),RD301
     2),(R(5),RD101),(R(6),RD102),(R(7),RS401),(B(1),BG10A,BG203C),(B(2)
     3,BC11A,BG203B),(B(3),SI10,BG203D),(B(4),BG13A,BC201H),(B(5),BC12A,
     4HI200),(B(6),BD11A,BG205C),(B(7),BD12A,BG205H),(B(8),BCW12A,BG205D
     5),(B(9),SO10,BC202H),(B(10),BD301A,HO200),(B(11),SO300,BG103C),
     6(B(12),BG201B,HI100),(B(13),SI200,BG104C),(B(14),BG205A,BG104H),
     7(B(15),BG205B,BG104D),(B(16),BC202A,HO100),(B(17),SO200),(B(18),BC
     8103A),(B(19),BG104B),(B(20),BG104S),(B(21),BD101A),(B(22),BD102A),
     9(B(23),SO100),(B(24),STBIN),(B(25),STBOUT),(B(26),BG203R)
     1,(AV(44),AY206A)
      COMMON MAX,MET,THO,TMO,N,MODE,D,KT,LINET
C     SET MET= 1 FOR ELAPSED TIME IN HRS;  SET MET= 2 FOR ELAPSED TIME IN MIN
      THO= 2
      TMO= 0
      MET= 1
      MAX= 12
      KTO= 1
      VP10D= 0.3601
      NPG= 1
      LINET= 60
      DO 49 N=1,7
      READ(1,998) (RLAB(N,M),M=1,3)
  998 FORMAT(3A4)
   49 CONTINUE
      DO 50 N=1,13
      READ(1,999) (UNIT(N,M),M=1,4)
  999 FORMAT(4X,4A4)
   50 CONTINUE
      READ(1,1000) NPRH2S,NTOPT,MO,DAY,YR,T1,T2
 1000 FORMAT(2X,2I1,1X,3I2,4X,F10.3,5X,F10.3)
      WRITE(3,2000) MO,DAY,YR,NPG
 2000 FORMAT(1H1,T105,I2,'/',I2,'/',I2,T118,'PAGE ',I2//T24,'STATUS REPO
     1RT OF OPERATING CONDITIONS FOR INTEGRATED OPERATION OF SO2 RECOVER
     2Y PROCESS'//)
      WRITE(3,2001)
 2001 FORMAT(T16,'OPERATING PERIOD:'/)
      CALL DATE(MO,DAY,YR,T1,T2)
      WRITE(3,2004)
 2004 FORMAT(T16,'PROCESS VARIABLES FOR OPERATING PERIOD:'/)
C          SUBROUTINE INPUT READS IN THE DATA.  EACH DATA SET IS READ BY A
C     CALL INPUT.  EACH CARD OF A DATA SET CONTAINS THE VALUE OF A PROCESS
```

```
C     VARIABLE AND CORRESPONDING VALUE OF THE PROCESS ELAPSED TIME.  EACH DATA
C     SET CONSISTS OF A MAX OF 12 DATA CARDS WITH 2 ENTRIES PER CARD.  AN ORANGE
C     DATA CARD WITH A 1 IN COL. 5 IS AT THE END OF EACH DATA SET.
      WRITE(3,3000)
 3000 FORMAT(/T56,'S O 2    S O R B E R'/)
      LINE= 18
      DO 20 KL=1,44
      CALL INPUT(T,HOLD,NOB)
      GO TO (3,4,5,6,7,8),MODE
    4 NPG= NPG+1
      WRITE(3,4000) MO,DAY,YR,NPG
 4000 FORMAT(1H1,T105,I2,'/',I2,'/',I2,T118,'PAGE ',I2//T39,'6"  D I A
     1  C A R B O N    P R E C O N D I T I O N E R'/)
      LINE= 4
      GO TO 3
    5 NPG= NPG+1
      WRITE(3,5000) MO,DAY,YR,NPG
 5000 FORMAT(1H1,T105,I2,'/',I2,'/',I2,T118,'PAGE ',I2//T51,'S U L F U R
     1    G E N E R A T O R'/)
      LINE= 4
      GO TO 3
    6 NPG= NPG+1
      WRITE(3,6000) MO,DAY,YR,NPG
 6000 FORMAT(1H1,T105,I2,'/',I2,'/',I2,T118,'PAGE ',I2//T37,' H 2 S    G
     1 E N E R A T O R / S U L F U R    S T R I P P E R'/)
      LINE= 4
      GO TO 3
    7 NPG= NPG+1
      WRITE(3,7000) MO,DAY,YR,NPG
 7000 FORMAT(1H1,T105,I2,'/',I2,'/',I2,T118,'PAGE ',I2//T48,' C A R B O
     1N    I N V E N T O R Y    H O P P E R'/)
      LINE= 4
      GO TO 3
    8 WRITE(3,8000)
 8000 FORMAT(/T50,' S U L F U R    C O N D E N S E R'/)
      LINE= LINE+2
    3 IF(NOB) 21,21,30
   21 IF(N-3) 22,22,20
   22 KTO= KTO+1
      GO TO 20
   30 SUM= 0.0
      DO 1 L=1,NOB
      ET= T(L)
      SUM= SUM+HOLD(L)
      CALL TIME(ET,NH,NM)
      CALL LPC(LINE,NPG,MO,DAY,YR)
      WRITE(3,2500) NH,NM,ET,(D(I),I=1,13),HOLD(L),(UNIT(N,M),M=1,4)
 2500 FORMAT(T11,I2,':',I2,' HRS ',F8.2,' HRS (ET)',T43,7A4,2X,6A4,2X,F9
     1.3,4A4)
    1 CONTINUE
      IF(N-3) 10,10,9
   10 AV(KT)= SUM
      CALL LPC(LINE,NPG,MO,DAY,YR)
      WRITE(3,2601)(D(I),I=1,10),(D(J),J=14,16),AV(KT),(UNIT(N,M),M=1,4)
```

```
 2601 FCRMAT(T26,' T O T A L :',T43,7A4,2X,6A4,2X,F9.3,4A4)
      IF(NOB-1) 51,51,52
   51 R(KTC)= AV(KT)
      GO TC 53
   52 R(KTC)= AV(KT)/(T(NOB)-T(1))
   53 NK= N+3
      CALL LPC(LINE,NPG,MO,DAY,YR)
      WRITE(3,2602) (D(I),I=1,10),(RLAB(KTO,MM),MM=1,3),R(KTO),
     1(UNIT(NK,M),M=1,4)
 2602 FORMAT(T28,' R A T E :',T43,7A4,2X,6A4,2X,F9.3,4A4/)
      LINE= LINE+1
      KTO= KTO+1
      GC TC 20
    9 AV(KT)= SUM/NOB
      CALL LPC(LINE,NPG,MO,DAY,YR)
      WRITE(3,2600)(D(I),I=1,10),(D(J),J=14,16),AV(KT),(UNIT(N,M),M=1,4)
 2600 FORMAT(T23,' A V E R A G E :',T43,7A4,2X,6A4,2X,F9.3,4A4/)
      LINE= LINE+1
   20 CONTINUE
      PRSC2 = 100.0*(1.C-(AY16A/AY10A))
      PUH2S = 100.0*(1.C-((AY206B/AY206E)/(AY200B/AY2C0E)))
      PUH2  = 100.0*(1.C-((AY108C/AY108E)/(AY100C/AY10CE)))
      PHCHS = (100.0*AY108B/AY108E)/(AY100C/AY100E)
      X90A  = AZ90A/(1CC.C-AZ90A-AZ90B)
      RC9C  = AC90A*(1.C-AZ90B/100.0)/(1.0+X90A)
      X301C = (AZ301A*(1.C+X90A)-X90A*(100.0-AZ301B))/(0.3265*(100.0-
     1AZ301B)-AZ301A)
      X301B = AZ301B*(1.0+X90A+X301C)/(100.0-AZ301B)
      X302C = (AZ302A*(1.0+X90A)-X90A*(100.0-AZ302B))/(0.3265*(100.0-
     1AZ302B)-AZ302A)
      X302B = AZ302B*(1.0+X90A+X302C)/(100.0-AZ302B)
      X200C = AZ200C/(100.0-AZ200A-0.67*AZ200C)
      X2CCA = (AZ200A-32.65*X200C)/(100.0-AZ200A-0.67*AZ2C0C)-X90A
      PVCS  = 76.5*X200A/X302C
      PVC   = 100.0*(1.0-X200C/X302C)
      SG108B= AG100E*AY108B*0.0829/AY108E
      PSCHS = 100.0*SG1C8B/(X200A*RC90)
      PRS   = 100.0*RS4C1/(X200A*RC90)
      BG10A = 23340.0*SQRT(ADP10/(ATL10+460.0))*(1.0-AY10D/1C0.0)*(AY1CA
     1/0.1E 07)/(1.0-VP10D/14.7)
      BG13A = 23340.0*SQRT(ADP10/(ATL10+460.0))*(1.0-AY10D/1C0.0)*(AY16A
     1/C.1E 07)/(1.0-VP10C/14.7)
      PRS1  = 100.0*RS401/(BG10A-BG13A)
      ERV400= 100.0*RS401/ABS(X200A*RC90-SG108B)
      NPG= NPG+1
      WRITE(3,2000) MO,DAY,YR,NPG
      WRITE(3,2001)
      CALL CATE(MO,DAY,YR,T1,T2)
      WRITE(3,9000)
 9000 FCRMAT(T16,'SUMMARY OF INTEGRATED PROCESS PERFORMANCE:'/)
      WRITE(3,9001) PRSC2
 9001 FCRMAT(T8,' 1.  SO2 REMOVAL',T56,'PRSO2 =',T65,F7.2,' % (ACTUAL)',
     1T91,' 9C.0 % (GOAL)'/)
      WRITE(3,9C02) PUH2S
```

```
 9002 FORMAT(T8,' 2.  H2S UTILIZATION',T56,'PUH2S =',T65,F7.2,' % (ACTUA
     1L)',T91,' 95.0 % (GOAL)'/)
      WRITE(3,9003) PVCS
 9003 FORMAT(T8,' 3.  ACID CONVERSION (TO SULFUR)',T56,'PVCS  =',T65,F7.
     12,' % (ACTUAL)',T91,' 99.0 % (GOAL)'/)
      WRITE(3,9004) PHCHS
 9004 FORMAT(T8,' 4.  H2 UTILIZATION (TO H2S)',T56,'PHCHS =',T65,F7.2,'
     1% (ACTUAL)',T91,' 90.0 % (GOAL)'/)
      WRITE(3,9005) PRS1,PRS
 9005 FORMAT(T8,' 5.  SULFUR RECOVERY',T56,'PRS   =',T65,F7.2,' % (ACTUA
     1L)',T91,'100.0 % (GOAL) OF SORBED SO2'/T65,F7.2,' % (ACTUAL)',T91,
     2' 25.0 % (GOAL) OF STRIPPED SULFUR'/)
      WRITE(3,9006) PUH2
 9006 FORMAT(T8,' 6.  H2 UTILIZATION 4" UNIT ',T56,'PUH2  =',T65,F7.2,'
     1%'/)
      WRITE(3,9007) X90A
 9007 FORMAT(T8,' 7.  RESIDUAL SULFUR ON CARBON',T56,'X90A  =',T65,F7.4,
     1' LB S/LB C'/)
      WRITE(3,9008) RC9C
 9008 FORMAT(T8,' 8.  CARBON RECYCLE RATE (DB)',T56,'RC90  =',T65,F7.3,'
     1 LB C(DB)/HR'/)
      WRITE(3,9009) X301C
 9009 FORMAT(T8,' 9.  ACID LOADING INLET CARBON 6" UNIT',T56,'X301C =',T
     165,F7.4,' LB ACID/LB C'/)
      WRITE(3,9010) X301B
 9010 FORMAT(T8,'10.  MOISTURE CONTENT INLET CARBON 6" UNIT',T56,'X301B
     1=',T65,F7.4,' LB H2O/LB C'/)
      WRITE(3,9011) X302C
 9011 FORMAT(T8,'11.  ACID LOADING INLET CARBON 8" UNIT',T56,'X302C =',T
     165,F7.4,' LB ACID/LB C'/)
      WRITE(3,9012) X302B
 9012 FORMAT(T8,'12.  MOISTURE CONTENT INLET CARBON 8" UNIT',T56,'X302B
     1=',T65,F7.4,' LB H2O/LB C'/)
      WRITE(3,9013) PVC
 9013 FORMAT(T8,'13.  TOTAL ACID CONVERTED 8" UNIT',T56,'PVC   =',T65,F7
     1.2,' %'/)
      WRITE(3,9014) PSCHS
 9014 FORMAT(T8,'14.  SULFUR CONVERSION (TO H2S)',T56,'PSCHS =',T65,F7.2
     1,' %'/)
      WRITE(3,9015) ERV400
 9015 FORMAT(T8,'15.  SULFUR CONDENSER EFFICIENCY',T56,'ERV400=',T65,F7.
     12,' %'/)
      WRITE(3,2005)
 2005 FORMAT(/T16,'MAJOR EVENTS DURING OPERATING PERIOD:'/)
      DO 23 I=1,5
      READ(1,1001)  (D(J),J=1,20)
 1001 FORMAT(20A4)
      WRITE(3,2006) (D(J),J=1,20)
 2006 FORMAT(T21,20A4)
   23 CONTINUE
      GO TO (666,665),NTOPT
  665 NPG= NPG+1
      WRITE(3,2000) MO,DAY,YR,NPG
      WRITE(3,2001)
```

```
      CALL DATE(MO,DAY,YR,T1,T2)
      N= 6
      NEND= 1
      NKT= 45
      BG10A = 23340.0*SQRT(ADP10/(ATL10+460.0))*(1.0-AY10D/100.0)*(AY10A
     1/0.1E 07)/(1.0-VP10D/14.7)
      BC11A = X90A*RC90
      BG13A = 23340.0*SQRT(ADP10/(ATL10+460.0))*(1.0-AY10D/100.0)*(AY16A
     1/0.1E 07)/(1.0-VP10D/14.7)
      BC12A = (0.3265*X302C+X90A)*RC90
      BD11A = RD11*AD11A/100.0
      BD12A = RD12*AD12A/100.0
      BCW12A= (0.3265*X302C+X90A)*RCW12
      BC201A= BC12A
      BG104B= 0.0829*AG100E*AY108B/AY108E
      BG201B= 0.0829*AG200E*AY200B/AY200E
      BG203R= 0.0
      GO TO (71,72),NPRH2S
   72 AG200E= AG100E
      BG201B= (0.0829*AG200E*AY200B/AY200E) - BG104B
      IF(BG201B) 172,172,171
  172 BG201B= 0.0
  171 BG203R= BG104B
   71 BG205A= 0.0829*AG200E*AY206A/AY206E
      BG205B= 0.0829*AG200E*AY206B/AY206E
      BC202A= (X200A+X9CA)*RC90
      BC103A= X90A*RC90
      BG104S= RS401
      BD101A= RD101*AD101A/100.0
      BD102A= RD102*AD102A/100.0
      BD301A= RD301*AD301A/100.0
      SI10 = BG10A+BC11A
      SC10 = BG13A+BC12A+BD11A+BD12A+BCW12A
      SO300= BC201A+BD301A
      SI200= BG201B+BC201A+BG203R
      SC200= BG205B+BG205A+BC202A
      SC100= BC103A+BG104B+BG104S+BD101A+BD102A
      STBIN = BG10A+BG201B
      STBOUT= BG13A+BD11A+BD12A+BCW12A + BG205B+BG205A + BG104B+BG104S+
     1BD101A+BD102A + BD301A
      GO TO (60,61),NPRH2S
   61 STBOUT= STBOUT-BG104B
      WRITE(3,9101)
 9101 FORMAT(T16,'SULFUR MATERIAL BALANCE (USING PROCESS H2S):'/)
      GO TO 62
   60 WRITE(3,9100)
 9100 FORMAT(T16,'SULFUR MATERIAL BALANCE (USING CYLINDER H2S):'/)
   62 DO 660 L=1,NKT
      READ(1,1010) NSKIP,KT,LOC,(D(I),I=1,13)
 1010 FORMAT(5X,2I1,I2,10X,13A4)
      GO TO (100,200,300,400,500,600,700,800),KT
  200 WRITE(3,3000)
      GO TO 700
  300 WRITE(3,4100)
```

```
 4100 FORMAT(//T39,'6" D I A   C A R B O N   P R E C O N D I T I C N
     1E R'/)
      GO TO 700
  400 WRITE(3,5100)
 5100 FORMAT(//T51,'S U L F U R   G E N E R A T O R'/)
      GO TO 700
  500 GO TO (501,502),NEND
  501 LINE= LINET+1
      CALL LPC(LINE,NPG,MO,DAY,YR)
  502 WRITE(3,6100)
 6100 FORMAT(//T37,' H 2 S   G E N E R A T O R / S U L F U R   S T R I
     1 P P E R'/)
      GO TO 700
  600 WRITE(3,9300)
 9300 FORMAT(//T42,' O V E R A L L   S U L F U R   B A L A N C E'/)
      GO TO 700
  700 WRITE(3,9500)
 9500 FORMAT(T23,' I N')
      GO TO 100
  800 WRITE(3,9600)
 9600 FORMAT(/T22,' O U T')
  100 GO TO (101,102),NPRH2S
  102 GO TO (101,103),NSKIP
  103 BG104B= 0.0
  101 WRITE(3,9700) (D(I),I=1,13),B(LOC),(UNIT(N,M),M=1,4)
 9700 FORMAT(T30,13A4,F9.4,4A4)
  660 CONTINUE
      GO TO (63,666),NEND
   63 NPG= NPG+1
      WRITE(3,9400) MO,DAY,YR,NPG
 9400 FORMAT(1H1,T105,I2,'/',I2,'/',I2,T118,'PAGE ',I2//T15,' HYDROGEN M
     1ATERIAL BALANCE:'/)
      N= 13
      NEND= 2
      NKT= 18
      BG104H= 0.00518*AG100E*AY108B/AY108E
      BG203C= 0.00518*AG200E*AY200C/AY200E
      BG203B= 0.00518*AG200E*AY200B/AY200E
      GO TO (75,76),NPRH2S
   76 BG203R= BG104H
      BG203B= (0.00518*AG200E*AY200B/AY200E) -BG104H
   75 BG203D= 0.00518*AG200E*AY200D/AY200E
      BC201H= (X302B/9.0+2.0*X302C/98.0)*RC90
      BG205C= 0.00518*AG200E*AY206C/AY206E
      BG205H= 0.00518*AG200E*AY206B/AY206E
      BG205D= 0.00518*AG200F*AY206D/AY206E
      BC202H= 0.111*AZ200B*RC90/(100.0-AZ200A-AZ200B)
      HI200 = BG203C+BG203B+BG203D+BC201H+BG203R
      HC200 = BG205C+BG205H+BG205D+BC202H
      BG103C= 0.00518*AG100E*AY100C/AY100E
      BG104C= 0.00518*AG100E*AY108C/AY108E
      BG104D= 0.00518*AG100E*AY108D/AY108E
      HI100 = BG103C+BC202H
      HC100 = BG104C+BG104H+BG104D
```



```
      GO TO 62
  666 CALL EXIT
      END
```

COMMON

SYMBOL	LOCATION	SYMBOL	LOCATION	SYMBOL	LOCATION	SYMBOL	LOCATION	SYMBOL	LOCATION
MAX	0000	MET	0004	THO	0008	TMO	000C	N	0010
MODE	0014	D	0018	KT	0068	LINET	006C		

SCALARS

SYMBOL	LOCATION	SYMBOL	LOCATION	SYMBOL	LOCATION	SYMBOL	LOCATION	SYMBOL	LOCATION
KTO	03FC	VP100	0400	NPG	0404	M	0408	NPRH2S	040C
NTCPT	0410	MO	0414	DAY	0418	YR	041C	T1	0420
T2	0424	LINE	0428	KL	042C	NOB	0430	SUM	0434
L	0438	ET	043C	NH	0440	NM	0444	I	0448
J	044C	NK	0450	MM	0454	PRSO2	0458	AY16A	02C8
AY10A	02C4	PUH2S	045C	AY206B	03CC	AY206E	0318	AY200B	02FC
AY200E	0314	PUH2	0460	AY108C	0338	AY108E	0340	AY100C	0334
AY100E	033C	PHCHS	0464	AY108B	0344	X90A	0468	AZ90A	0360
AZ90B	0364	RC90	046C	AC90A	0368	X301C	0470	AZ301A	02EC
AZ301B	02F0	X301B	0474	X302C	0478	AZ302A	0320	AZ302B	0328
X302B	047C	X200C	0480	AZ200C	033C	AZ200A	0324	X200A	0484
PVCS	0488	PVC	048C	SG108B	049C	AG100E	034C	PSCHS	0494
PRS	0498	RS401	0390	BG10A	0394	ADP10	0200	ATL10	02D4
AY1CD	02CC	BG13A	03A0	PRS1	049C	ERV4CC	04A0	NEND	04A4
NKT	04A8	BC11A	0398	BC12A	03A4	BD11A	03A8	RD11	0378
AD11A	02E4	BD12A	03AC	RD12	037C	AD12A	02E8	BCW12A	03B0
RCW12	0380	BC201A	04AC	BG104B	03DC	BG201B	03C0	AG200E	031C
BG203R	03F8	BG205A	03C8	AY206A	037C	BG205B	03CC	BC202A	03D0
BC103A	03D8	BG104S	03E0	BD101A	03E4	RD101	0388	AD101A	0358
BD102A	03E8	RD102	038C	AD102A	035C	BD301A	0388	RD301	0384
AD301A	02F8	SI10	039C	SO10	03B4	SO300	03BC	SI200	03C4
SO200	03D4	SO100	03EC	STBIN	03FC	STBOUT	03F4	NSKIP	04EC
LCC	04B4	BG104H	03C8	BG203C	0394	AY200C	0304	BG203B	0398
BG203D	039C	AY200D	030C	BC201H	03AC	BG205C	03A8	AY206C	03D8
BG205H	03AC	BG205D	03B0	AY206D	031C	BC202H	03B4	AZ200B	032C
HI200	03A4	HO200	03B8	BG103C	03BC	BG104C	03C4	BG104D	03CC
AY108D	0348	HI100	03C0	HO100	03DC	WD11	02D8	WD12	02DC
WCW12	02E0	WD301	02F4	WD101	035C	WD102	0354	WS401	036C

ARRAYS

SYMBOL	LOCATION	SYMBOL	LOCATION	SYMBOL	LOCATION	SYMBOL	LOCATION	SYMBOL	LOCATION
AV	02C4	B	0394	R	0378	T	04B8	HOLD	04E8
RLAB	0518	UNIT	056C						

CALLED SUBROUTINES

IJTAAFR	IJTACOM	DATE	INPUT	TIME	LPC	IJTSSQT	SQRT	IJTFXIT	EXIT

LABEL	LOCATION	LABEL	LOCATION	LABEL	LOCATION	LABEL	LOCATION	LABEL	LOCATION
00998	011C	00049	0128	00999	019C	00050	01AA	01000	0208
02000	0258	02001	02EC	02004	0328	03000	036C	00004	03DA
04000	041C	00005	048C	05000	04CC	00006	0526	06000	0568

C0C07	05DE	07000	0620	CCCC8	C68A	08000	06A0	C0003	C6DC
C0021	06E8	CC022	06FC	00030	07CE	02500	0804	C0C01	0840
C001C	0864	02601	C958	CC051	C996	00052	09B8	00053	C9E6
02602	CAD4	00009	CB1E	026C0	0C30	00020	0C6E	09000	0FAC
09001	0FFC	09002	1060	09003	10C8	09004	113C	09005	11B4
C9C06	1264	09007	12BC	09C08	131C	09C09	137C	09010	13E8
C9011	1458	09012	14C4	09013	1534	09G14	1590	09015	15E8
02C05	163C	01001	16C0	02006	171C	00023	171E	C0665	1758
CCC72	1914	00172	1940	00171	1948	00071	1950	00061	1A96
09101	1A88	00060	1AF8	C9100	1BCC	00062	1B46	01010	1BB4
C02C0	1BFC	C03CC	1C16	C4100	1C2C	CC4CC	1C78	C5100	1C8C
CC50C	1CC2	C0501	1CE8	C0502	1CC2	06100	1D18	00600	1D6A
C9300	1D80	00700	1DBE	C9500	1CC4	00800	1DEA	C9600	1ECC
C01CC	1E14	00102	1E3A	C0103	1E60	001C1	1E68	C9700	1F04
CC660	1F1A	00063	1F54	09400	1F94	00076	2058	C0075	2078
C0666	218E								

COMPILATION COMPLETE AMOUNT OF COMMON 0C0112 AMOUNT OF CORE C10304 ADDRESS BASE TABLE 2168

```
      SUBROUTINE INPUT(ETIME,DATA,NOB)
      INTEGER THO,TMO
      DIMENSION ETIME(12),DATA(12),D(20)
      COMMON MAX,MET,THO,TMO,N,MODE,D,KT,LINET
      READ(1,1002) KT,N,MODE,(D(I),I=1,17)
 1002 FORMAT(1X,I2,2X,I2,I1,4X,17A4)
      DO 1 I=1,MAX
      READ(1,1000) K,ETIME(I),DATA(I)
 1000 FORMAT(I5,5X,F10.4,5X,F10.4)
      IF(K) 1,1,2
    2 NOB= I-1
      GO TO 3
    1 CONTINUE
      NOB= MAX
      READ(1,1001) K
 1001 FORMAT(I2)
    3 RETURN
      END
```


03/07/74 INPUT 0002

COMMON

SYMBOL	LOCATION	SYMBOL	LOCATION	SYMBOL	LOCATION	SYMBOL	LOCATION	SYMBOL	LOCATION
MAX	0000	MET	0004	THO	0008	TMO	000C	N	0010
MODE	0014	D	0018	KT	0068	LINET	006C		

SCALARS

SYMBOL	LOCATION	SYMBOL	LOCATION	SYMBOL	LOCATION	SYMBOL	LOCATION	SYMBOL	LOCATION
I	0074	K	0078	NOB	0070				

CALLED SUBROUTINES

IJTAAFR IJTACOM

LABEL	LOCATION	LABEL	LOCATION	LABEL	LOCATION	LABEL	LOCATION	LABEL	LOCATION
01002	00FC	01000	0170	00002	019C	00001	01A2	01001	01E0
00003	01EA								

COMPILATION COMPLETE AMOUNT OF COMMON 000112 AMOUNT OF CORE 000624 ADDRESS BASE TABLE 01D8

```
      SUBROUTINE DATE(MO,DAY,YR,T1,T2)
      INTEGER DAY,YR,THO,TMO
      DIMENSION D(20)
      COMMON MAX,MET,THO,TMO,N,MODE,O,KT,LINET
      NMO= MO
      NDAY= DAY
      T= T2
      CALL TIME(T1,NH1,NM1)
      CALL TIME(T2,NH2,NM2)
      IF(NH2-NH1) 3,2,1
    2 IF(NM2-NM1) 3,1,3
    3 NDAY= NDAY+1
    1 IF(T-T1-24.0) 4,5,5
    5 T= T-24.0
      GO TO 3
    4 IF(NDAY-DAY) 6,6,7
    6 WRITE(3,2002) MO,DAY,YR,NH1,NM1,NH2,NM2
 2002 FORMAT(T20,' DATE: ',I2,'/',I2,'/',I2,T41,'TIME OF RECORD:  ',I2,'
     1:',I2,' HRS  TO  ',I2,':',I2,' HRS')
      GO TO 15
    7 GO TO (8,9,8,10,8,10,8,8,10,8,10,8),MO
    8 IF(NDAY-31) 11,11,12
   12 NDAY= NDAY-31
      NMO= MO+1
      GO TO 11
    9 IF(NDAY-28) 11,11,13
   13 NDAY= NDAY-28
      NMO= MO+1
      GO TO 11
   10 IF(NDAY-30) 11,11,14
   14 NDAY= NDAY-30
      NMO= MO+1
   11 IH= 24
      IM= 0
      WRITE(3,2002) MO,DAY,YR,NH1,NM1,IH,IM
      IH= 0
      WRITE(3,2002) NMO,NDAY,YR,IH,IM,NH2,NM2
   15 T= T2-T1
      WRITE(3,2003) T1,T2,T
 2003 FORMAT(/T20,' PROCESS ELAPSED TIME OF PERIOD:    START ',F6.2,' HR
     1S / END  ',F6.2,' HRS     LENGTH OF PERIOD:  ',F6.2,' HRS'//)
      RETURN
      END
```

03/07/74 CATE C002

COMMON

SYMBOL	LOCATION	SYMBOL	LOCATION	SYMBOL	LOCATION	SYMBOL	LOCATION	SYMBOL	LOCATION
MAX	0000	MET	0004	THC	0008	TMO	000C	N	0010
MODE	0014	D	0018	KT	006E	LINET	006C		

SCALARS

SYMBOL	LOCATION	SYMBOL	LOCATION	SYMBOL	LOCATION	SYMBOL	LOCATION	SYMBOL	LOCATION
NMO	00B8	MO	00A4	NDAY	00BC	DAY	00A8	T	00C0
T2	00B4	T1	00B0	NH1	00C4	NM1	00C8	NH2	00CC
NM2	00D0	YR	00AC	IH	00D4	IM	00D8		

CALLED SUBROUTINES

IJTACCM TIME

LABEL	LOCATION	LABEL	LOCATION	LABEL	LOCATION	LABEL	LOCATION	LABEL	LOCATION
00002	00E0	00003	00F0	00001	00FC	00005	0110	00004	0122
00006	0132	02002	0180	00007	01DA	00008	0214	00012	0224
00009	0242	00013	0252	00010	027C	00014	0280	00011	0298
00015	0344	02003	037C						

COMPILATION COMPLETE AMOUNT OF COMMON 000112 AMOUNT OF CORE 001296 ADDRESS BASE TABLE 0408

```
      SUBROUTINE TIME(ET,NH,NM)
      INTEGER THO,TMO
      DIMENSION D(20)
C     COMMON REQUIRED FOR VALUES MET,THO,TMO
C          MET= 1  WHEN ELAPSED TIME IN HRS; THIS VALUE NORMALLY ASSUMED
C          MET= 2  WHEN ELAPSED TIME IN MINUTES
C     THO, TMO = TIME ON 24:00 CLOCK WHEN ET= 0 IN HRS AND MIN, RESPECTIVELY
      COMMON MAX,MET,THO,TMO,N,MODE,D,KT,LINET
      NM= 0
      NH= 0
      GO TO (1,2),MET
    2 ET= ET/60.0
    1 IF(ET-1.0) 3,4,4
    3 IF(ET-0.05) 5,6,6
    5 NH= THO
      NM= TMO
      GO TO 15
    6 T= ET
      GO TO 10
    4 T= ET
    9 IF(T-24.0)7,7,8
    8 T= T-24.0
      GO TO 9
    7 IF(T-1.0) 10,10,11
   11 T= T-1.0
      NH= NH+1
      GO TO 7
   10 NM= T*60.0+TMO
   14 IF(NM-60) 12,13,13
   13 NM= NM-60
      NH= NH+1
      GO TO 14
   12 NH= NH+THO
   17 IF(NH-24) 15,16,16
   16 NH= NH-24
      GO TO 17
   15  RETURN
      END
```

COMMON

SYMBOL	LOCATION	SYMBOL	LOCATION	SYMBOL	LOCATION	SYMBOL	LOCATION	SYMBOL	LOCATION
MAX	0000	MET	0004	THO	0008	TMO	000C	N	0010
MODE	0014	D	0018	KT	0068	LINET	006C		

SCALARS

SYMBOL	LOCATION	SYMBOL	LOCATION	SYMBOL	LOCATION	SYMBOL	LOCATION	SYMBOL	LOCATION
NM	0094	NH	0090	ET	008C	T	0098		

CALLED SUBROUTINES

IJTACOM

LABEL	LOCATION	LABEL	LOCATION	LABEL	LOCATION	LABEL	LOCATION	LABEL	LOCATION
00002	00C4	00001	00D0	00003	00EC	00005	00F0	00006	01CA
00004	0118	00009	0120	00008	0130	00007	0142	00011	0152
00010	0170	00014	01B6	00013	01C6	00012	01E4	00017	01F4
00016	0204	00015	0216						

COMPILATION COMPLETE AMOUNT OF COMMON 000112 AMOUNT OF CORE 000760 ADDRESS BASE TABLE 0218

```
      SUBROUTINE LPC(LINE,NPG,MO,DAY,YR)
      INTEGER DAY,YR
      DIMENSION D(20)
      COMMON MAX,MET,THC,TMC,N,MODE,D,KT,LINET
      IF(LINE-LINET) 1,1,2
    1 LINE= LINE+1
      GO TO 3
    2 LINE= 2
      NPG= NPG+1
      WRITE(3,1000) MO,DAY,YR,NPG
 1000 FORMAT(1H1,T105,I2,'/',I2,'/',I2,T118,'PAGE ',I2/)
    3 RETURN
      END
```


COMMON

SYMBOL	LOCATION	SYMBOL	LOCATION	SYMBOL	LOCATION	SYMBOL	LOCATION	SYMBOL	LOCATION
MAX	0000	MET	0004	THC	0008	TMC	000C	N	0010
MODE	0014	D	0018	KT	0068	LINET	006C		

SCALARS

SYMBOL	LOCATION	SYMBOL	LOCATION	SYMBOL	LOCATION	SYMBOL	LOCATION	SYMBOL	LOCATION
LINE	0058	NPG	005C	MO	006C	DAY	0064	YR	0068

CALLED SUBROUTINES

IJTAGCM

LABEL	LOCATION	LABEL	LOCATION	LABEL	LOCATION	LABEL	LOCATION	LABEL	LOCATION
00001	0082	00002	00C4	01000	01C0	00003	0132		

COMPILATION COMPLETE AMOUNT OF COMMON 000112 AMOUNT OF CORE 000456 ADDRESS BASE TABLE 0148

APPENDIX A-23

DETAILED SO_2 SORBER DATA ANALYSIS

		Page
1.	Evaluation of Rate Models for SO_2 Sorption	651
2.	Effect of Fly Ash on Carbon Activity	659

APPENDIX A-23-1

EVALUATION OF RATE MODELS FOR SO_2 SORPTION

Amundson Equation

The Amundson equation

(1) $$\frac{dX_v}{dt} = ky(1 - \frac{X_v}{X_{vs}})$$

is most conveniently rearranged to the form

(2) $$\frac{1}{y}\frac{dX_v}{dt} = k - \frac{k}{X_{vs}} X_v$$

in order to allow the determination of k and X_{vs}. Figure A-23-1 shows that the equation does not represent the data unless the rate constant, k, and X_{vs} are SO_2 concentration dependent. The Amundsom parameters extracted from the SO_2 sorption rate data are given in Table A-23-1.

Table A-23-1. PARAMETERS FOR AMUNDSON EQUATION FOR SO_2 SORPTION DATA AT 200°F WITH NITRIC OXIDE

SO_2 Conc., PPM	Rate Constant, k	Saturated Loading, X_{vs}
2500	0.33	0.499
2000	0.38	0.559
1500	0.51	0.360
1000	0.66	0.390
500	0.97	0.417

Since there was an apparent effect of SO_2 concentration on the rate constant as shown in Table A-23-1, the Amundson equation was not considered to be suitable to represent the data. It is interesting to note that the constant, X_{vs}, extracted from the Amundson equation does not disagree appreciably with 0.38 which was determined by extrapolation of the experimental data to a zero rate.

Figure A-23-1. Amundson approximation to sorption data at 200°F with nitric oxide

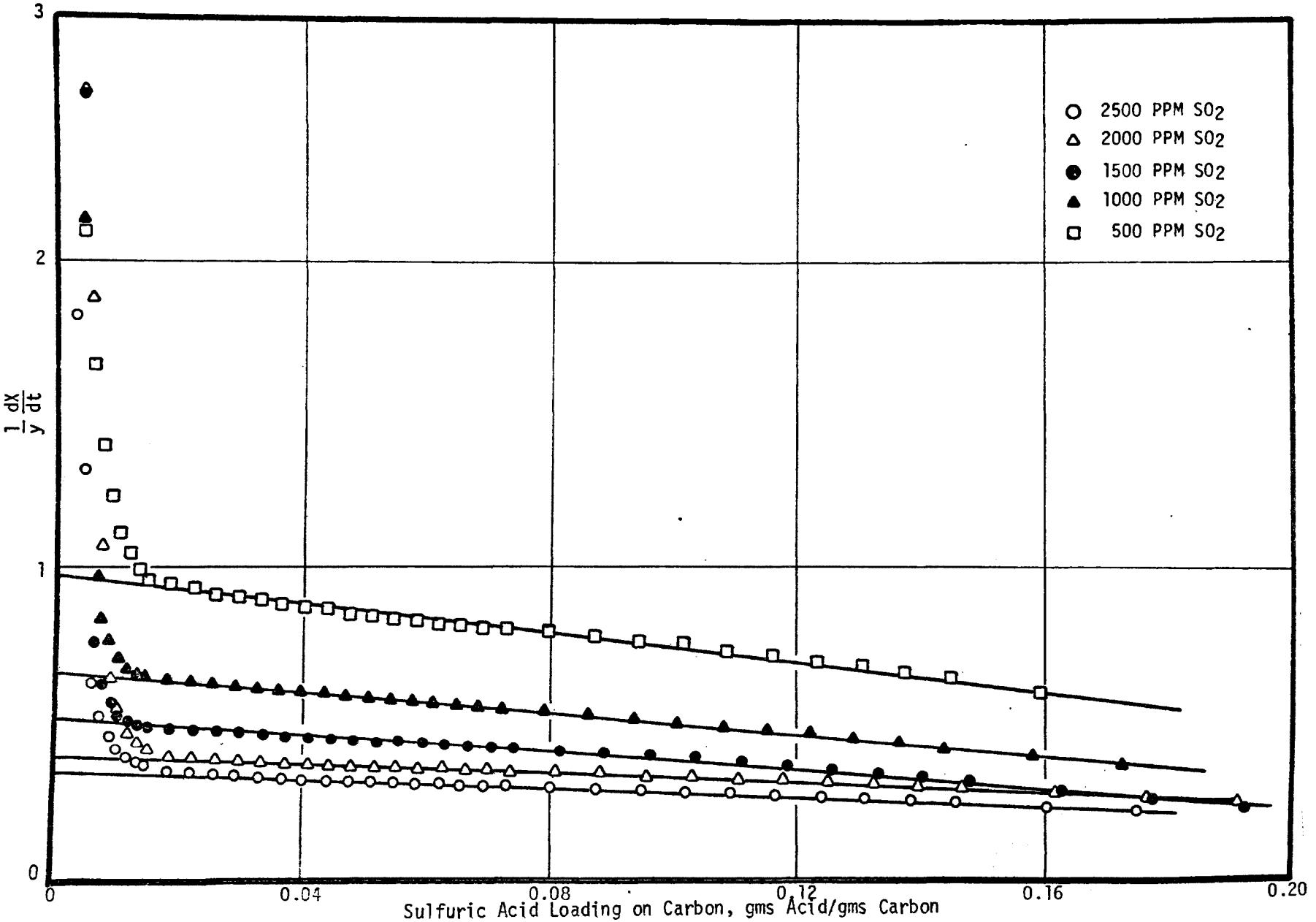

Jost Equation

The Jost equation

(3) $$\frac{dX_v}{dt} = \frac{y}{2\,aX_v + b}$$

is most conveniently arranged in the integrated form

(4) $$\frac{yt}{X_v} = aX_v + b$$

to determine a and b, second and first order impedances (reciprocal rate constants). The data are presented in Figure A-23-2. The impedances that were subsequently extracted are given in Table A-23-2. Again there was no

Table A-23-2. REACTION IMPEDANCES FOR JOST EQUATION FOR SO_2 SORPTION DATA AT 200°F WITH NITRIC OXIDE

SO_2 Concentration, PPM	a	b
2500	5.844	2.53
2000	4.797	2.14
1500	5.414	1.71
1000	3.261	1.33
500	2.548	0.88

justification for forcing an apparent dependence of the rate constant on SO_2 concentration. Therefore the Jost equation was not considered as a suitable function to represent the SO_2 sorption rate data.

AVCO Equation

The AVCO equation

(5) $$\frac{dX_v}{dt} = \frac{AX_{ys}y}{\left\{1 + \frac{B\left[1 - (1 - \frac{X_v}{X_{vs}})^{1/3}\right]}{(1 - \frac{X_v}{X_{vs}})^{1/3}}\right\}}$$

Figure A-23-2. Jost approximation to sorption data at 200°F with nitric oxide

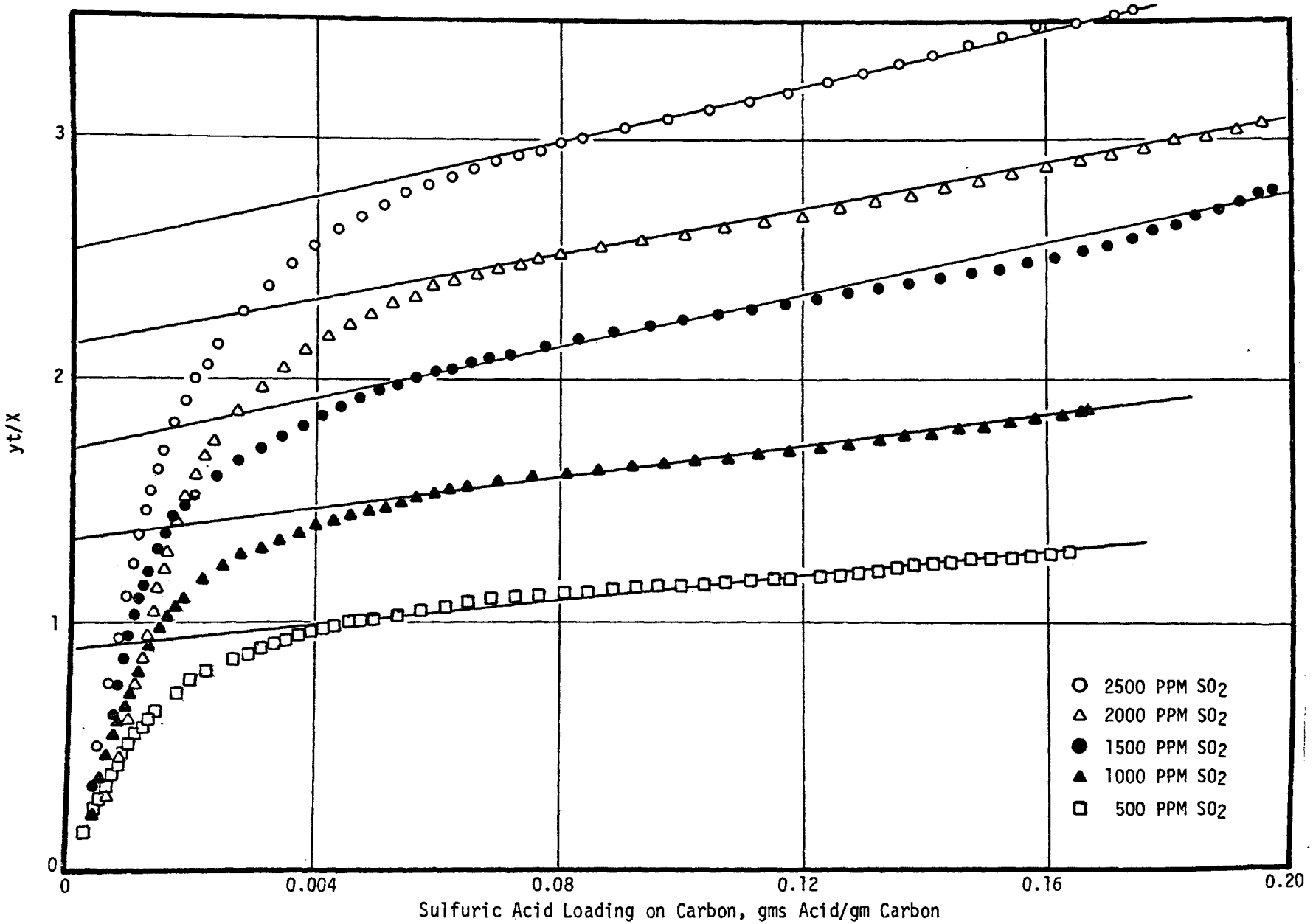

can be arranged in the form

(6) $$\frac{y}{dX_v/dt} = \frac{1 - B}{AX_{vs}} = \frac{B}{AX_{vs}\left(1 - \frac{X_v}{X_{vs}}\right)^{1/3}}$$

to the data is given in Figure A-23-3 and the reaction parameters extracted from the experimental data are given in Table A-23-3.

Table A-23-3. REACTION RATE CONSTANTS FOR THE AVCO EQUATION FOR SO_2 SORPTION DATA AT 200°F WITH NITRIC OXIDE

SO_2 Concentration, PPM	A	B
2500	-0.75	2.42
2000	-1.07	2.70
1500	-0.67	2.00
1000	-1.63	2.89
500	-1.55	2.14

It is expected that if the rate model represented the rate data one straight line would be obtained through the data which would necessarily scatter about the curve. It can be seen that a definite trend is present with decreasing SO_2 concentration. Therefore, the rate expression does not represent the data; and there is considerable scatter in both of the rate parameters. Based on this the equation was not considered as a suitable function to represent the SO_2 sorption rate data.

Tracor Equation

The Tracor equation

(7) $$\frac{dX_v}{dt} = ky\left(1 - \frac{X_v}{X_{vs}}\right)^n$$

can be evaluated by rearranging to the form

Figure A-23-3. AVCO approximation to sorption data at 200°F with nitric oxide

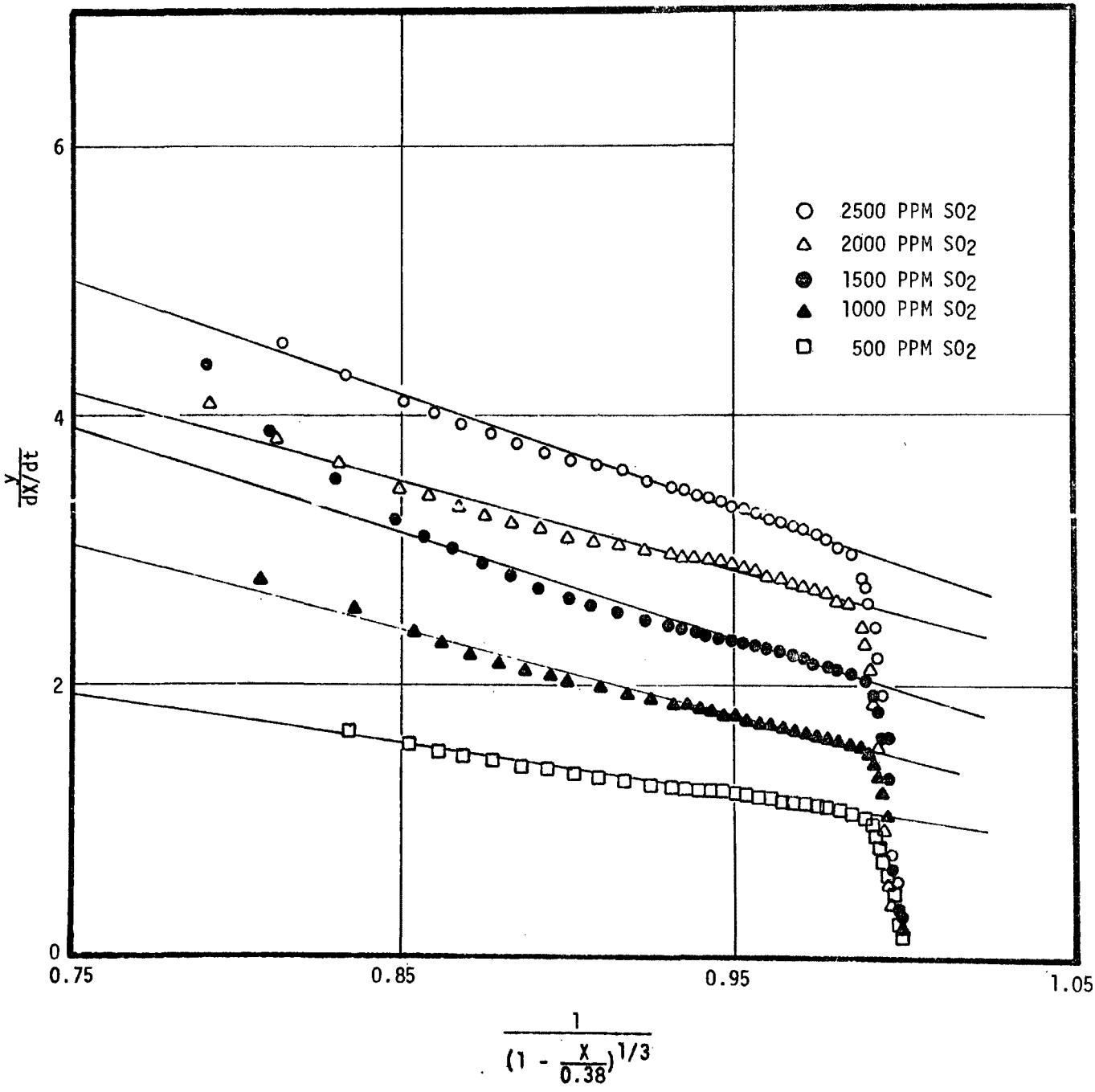

(8) $$\text{Ln}\left[\frac{\overline{dXv/dt}}{y}\right] = \text{Ln}[k] + n\ \text{Ln}\left[1 - \frac{Xv}{0.38}\right]$$

to allow the determination of k and n from experimental data. Figure A-23-4 shows that the equation does not represent the data unless the rate constant is made concentration dependent. The rate parameters for the Tracor equation are given in Table A-23-4.

Table A-23-4. PARAMETERS FOR TRACOR EQUATION FOR SO_2 SORPTION DATA AT 200°F WITH NITRIC OXIDE

SO_2 Concentration, PPM	k	n
2500	0.341	0.724
2000	0.383	0.563
1500	0.497	0.955
1000	0.654	0.959
500	0.777	0.951

Again there is no reason to make the rate constant a function of concentration; therefore the Tracor equation will not be considered any further.

Figure A-23-4. Tracor approximation to sorption data at 200°F with nitric oxide

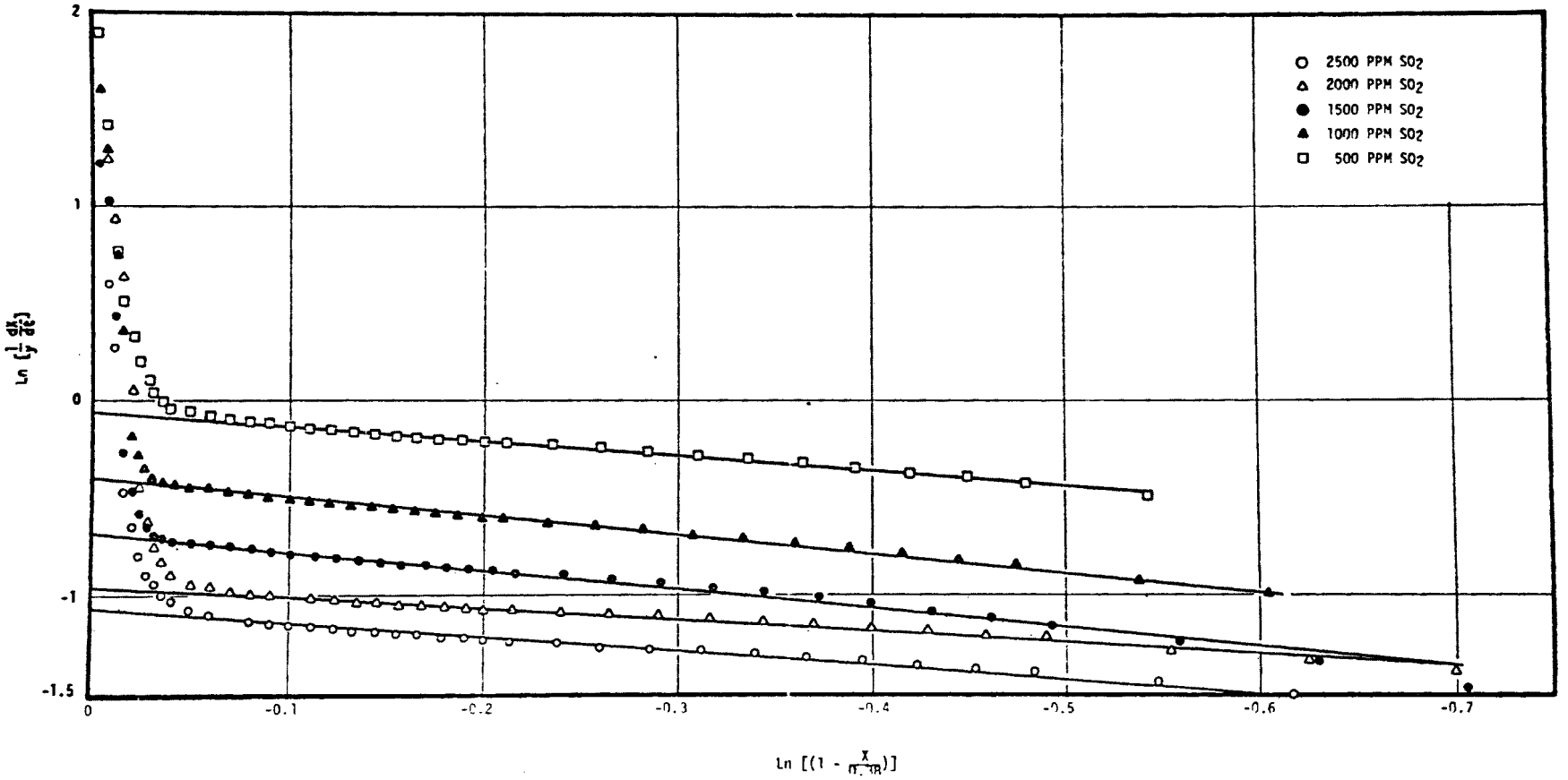

APPENDIX A-23-2

EFFECT OF FLY ASH ON CARBON ACTIVITY

In the application of the Westvaco Process to flue gas desulfurization, many of the applications are expected to be on coal fired boilers. The current pilot plant operates on an oil-fired boiler; however, the boiler is equipped to fire coal and the probability exists that in the event of severe oil shortages the boiler could be fired with coal. In order to obtain a preliminary assessment of any effects carbon was exposed to fly ash laden air for 5 days. This is comparable to the time the carbon will be exposed to flue gas during the integral runs.

The equipment used in the tests is shown schematically in Figure A-23-5. Fly ash was metered into an air stream which fluidized the batches of carbon in a Plexiglass column. The unit was set up so that carbon samples could be taken periodically for ash analysis and SO_2 activity measurement.

Conditions

1)	Gas:	a) Air at room temperature b) Rate of 3 ft./sec. @ 70°F, 15.7 CFM @ 70°F	
2)	C Bed Weight:	About 325 grams	
3)	Fly Ash:	a) Source	- From boiler combusting Southwestern Virginia coal
		b) Rate	- 15 gms./hr., 0.24 grains/SCF
		c) Part. Size	- 95% <50μ (see Figure A-23-6 for distribution)

The fly ash grain loading was chosen to be what was typical of that from a boiler with a 75% efficient cyclone and no precipitator. This is many times the expected loading after the gas passes through a precipitator. Chemical composition of the ash was not determined; however, the particle size distribution is shown in Figure A-23-6. Ninety-five percent of the ash was smaller than 50 microns and over 50% smaller than 20 microns.

Figure A-23-5. Fluid bed set-up for fly-ash exposure tests

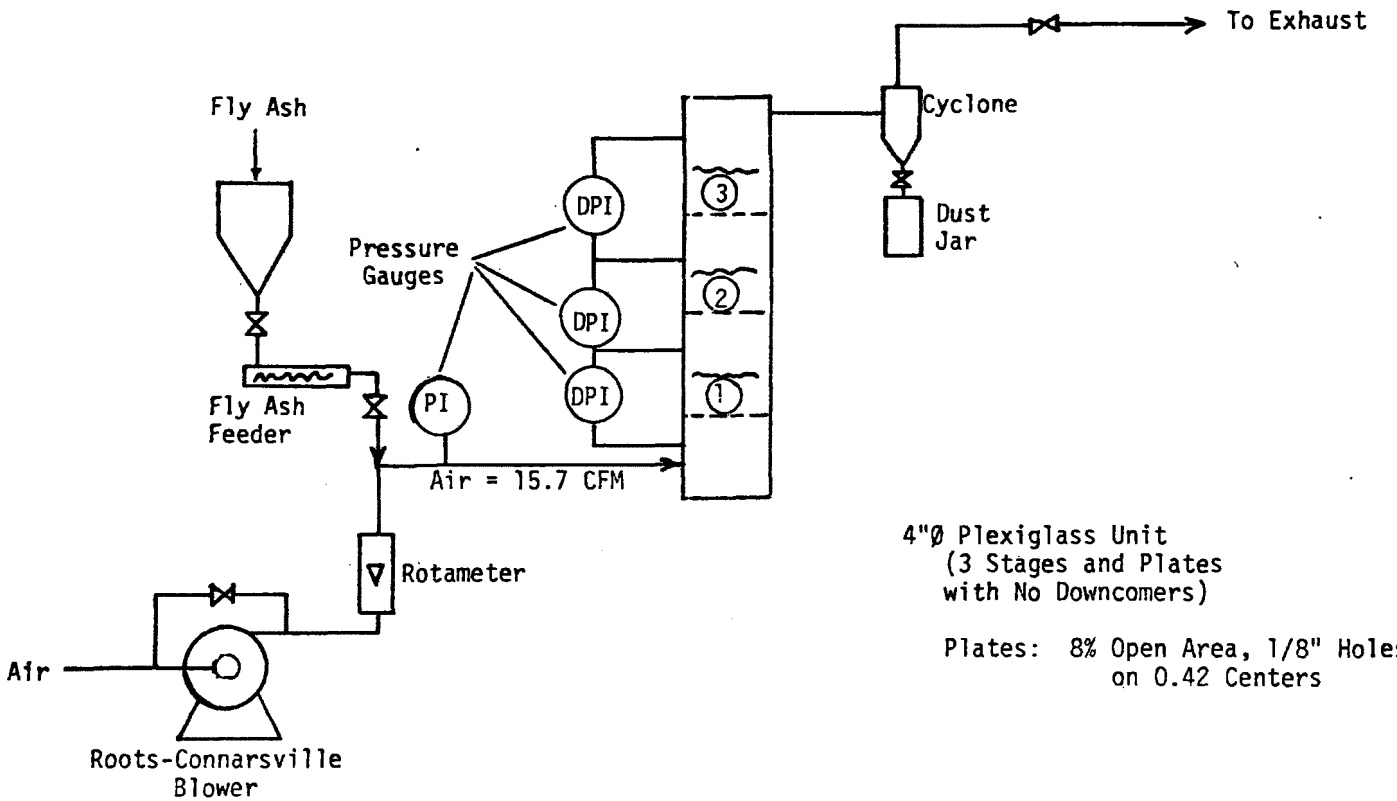

4"Ø Plexiglass Unit
(3 Stages and Plates
with No Downcomers)

Plates: 8% Open Area, 1/8" Holes
on 0.42 Centers

Gas Rate = 3 ft./sec. = 15.7 CFM (Air)

Fly Ash Rate = 15 gms./hr.

Figure A-23-6. Size distribution of fly ash used in carbon exposure tests

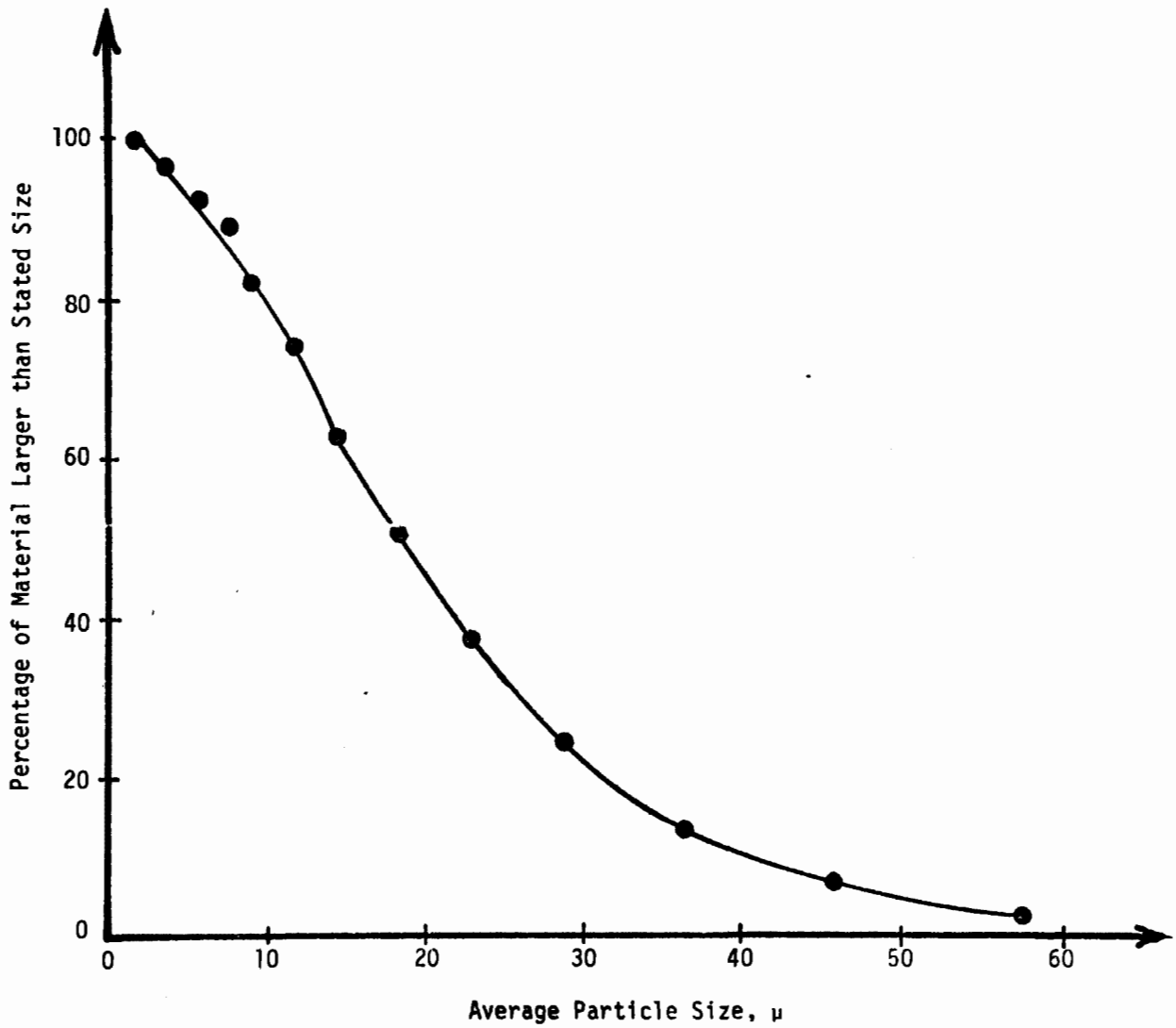

The ash content of the activated carbon is plotted versus time in Figure A-23-7. The results show no noticeable increase in the ash content of the carbon over the exposure time of 120 hours. The evaluation of the SO_2 activity of the initial and fly ash treated carbon is shown in Table A-23-5.

Table A-23-5. EFFECT OF FLY ASH EXPOSURE ON SO_2 SORPTION BY ACTIVATED CARBON

Sample	SO_2 Activity*, lb. SO_2/lb. C-min.
Virgin Carbon	0.83×10^{-3}
Virgin Carbon after 120 Hrs. Fly Ash Exposure	0.78×10^{-3}

There is very little difference between the activity of the virgin and fly ash exposed carbon; and for practical purposes, within the experimental error of these tests, the activities are the same.

Although long term exposure to flue gas under actual conditions is necessary to assure that there are no effects of fly ash, these initial tests showing essentially constant ash content and SO_2 activity after 5 days exposure are encouraging.

*Integral sorption rate of H_2 treated carbon when exposed to simulated flue gas at 200°F for 5 hours.

Figure A-23-7. Effect of fly ash exposure on activated carbon ash content

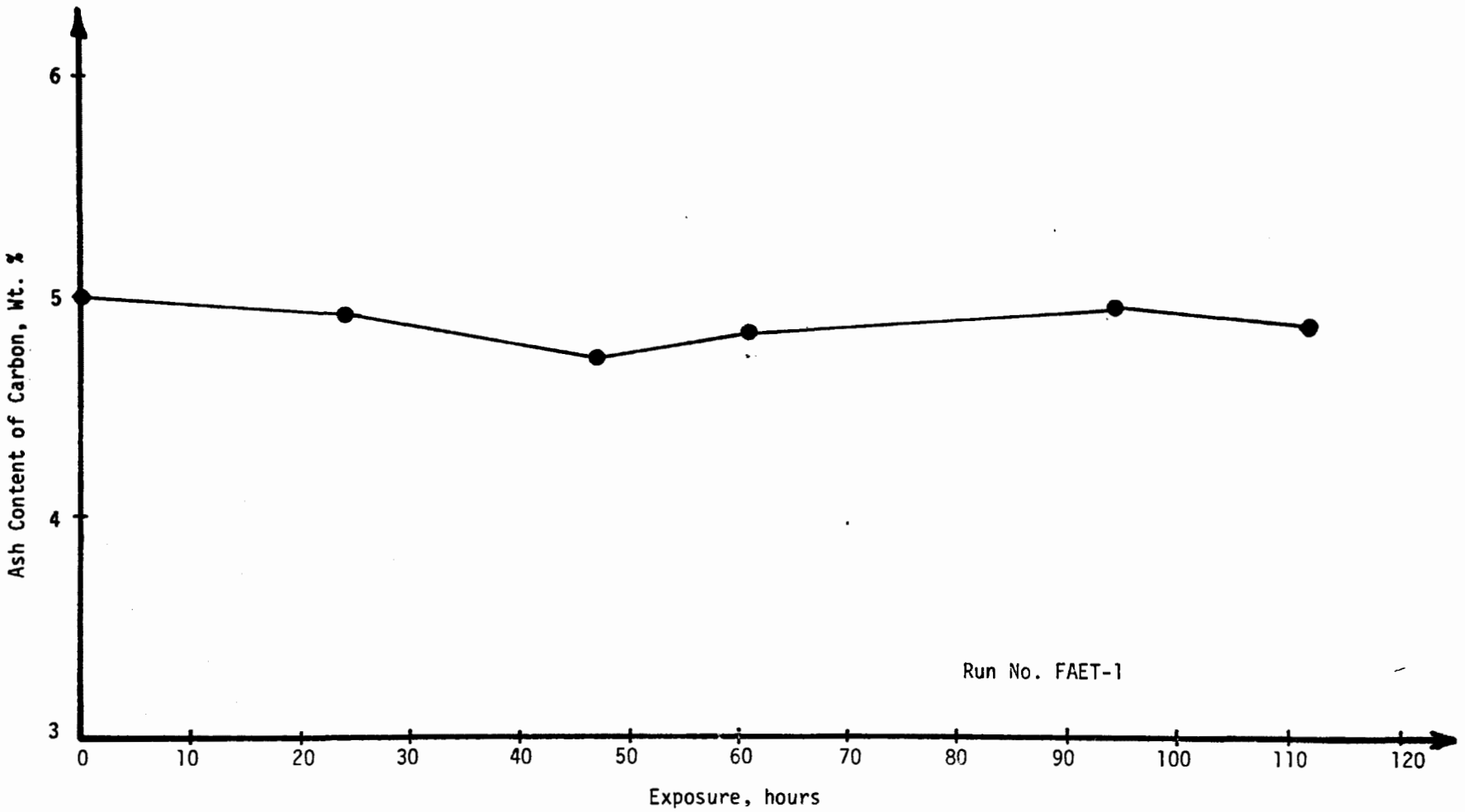

APPENDIX

SECTION B

DETAILED PILOT PLANT INFORMATION

APPENDIX B-1

ANALYTICAL TECHNIQUES

INTRODUCTION

The various analytical test procedures which were used to evaluate carbon samples are described in this section of the Appendix. Many of the analyses were used for characterizing a carbon sample in terms of various properties which are important to the economic utility of the carbon in the fluidized bed SO_2 removal process. Included in this group of tests are apparent density, particle size distribution, attrition rate, SO_2 activity, and pore size distribution. Other analyses such as total sulfur content, moisture, and acid titration were used primarily to calculate process performance parameters. A list of the various tests which are described in this Appendix is given below:

		Page
1.	Apparent Density	666
2.	Particle Size Distribution	670
3.	Attrition Rate	672
4.	SO_2 Activity	675
5.	Pore Size Distribution and Surface Area	676
6.	Total Ash Content	679
7.	Total Sulfur Content	680
8.	Moisture Content	682
9.	Acid Titration	683
10.	Gas Phase Sulfur Vapor Concentration	684
11.	SO_2 Activity	686

APPARENT DENSITY

Scope

This method covers a procedure for determining the apparent density of granular activated carbon. For purposes of this test, granular activated carbon is defined as a minimum of 90% being larger than 80 mesh.

Apparatus

1. Vibrator Feeder - See Figures B-1-1, -2, and -3.
2. Cylinder, Graduated, Capacity 100 ml.
3. Balance having a sensitivy of 0.1 g.

Procedure

1. An adequate sample of the carbon to be tested should be dried to constant weight at 150±59°C (for 1 hour).

2. A representative sample of this dried activated carbon is carefully placed into the reservoir funnel so that the material does not prematurely flow into the graduated cylinder. If this occurs, return the material to the reservoir funnel.

3. The sample is added to the cylinder by the vibrator feeder, through the feed funnel having a 15/16 inch inside diameter stem.

4. Fill the cylinder, at a uniform rate not less than 0.75 or to exceed 1.0 milliliter per second, up to the 100 ml. mark. The rate can be adjusted by changing the slope of the metal vibrator and/or raising or lowering the reservoir funnel.

5. Transfer the contents to a balance pan and weigh to the nearest tenth of a gram (0.1 g.).

Calculations

Calculate the apparent density as follows:

$$\text{Apparent Density, g./cc.} = \frac{\text{Weight of Activated Carbon}}{100}$$

FIGURE B-1-1. Apparent density vibrator feeder

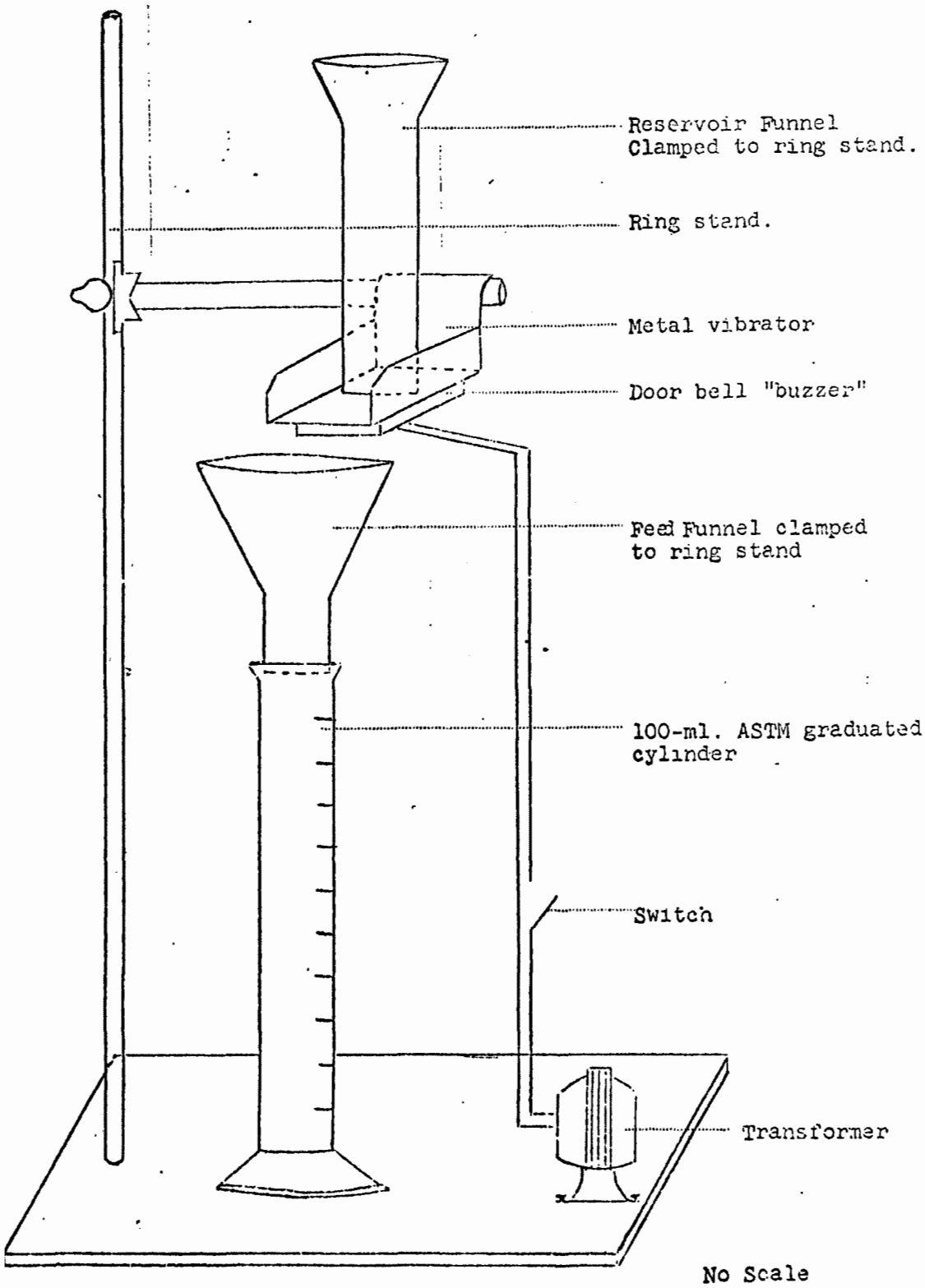

Figure B-1-2. Metal vibrator

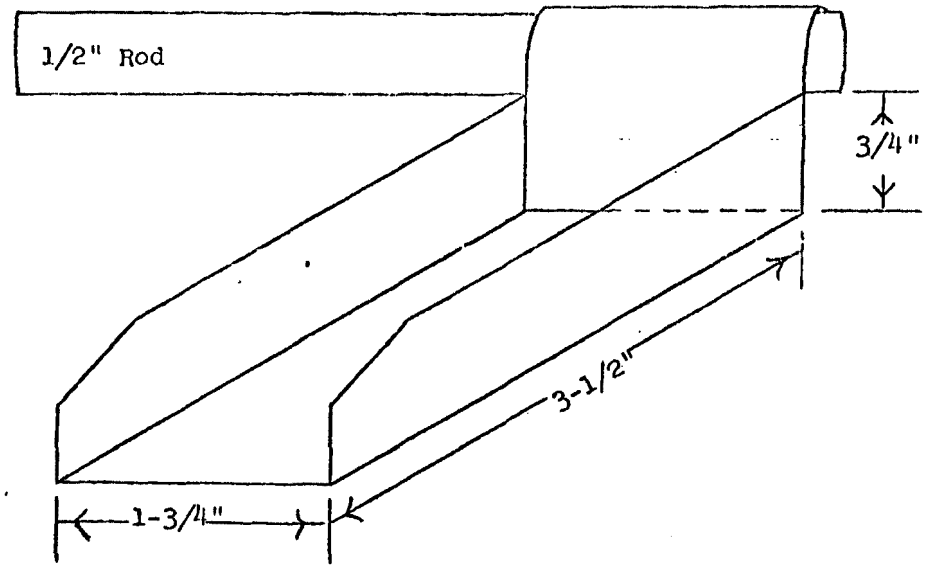

Actual Size

Figure B-1-3

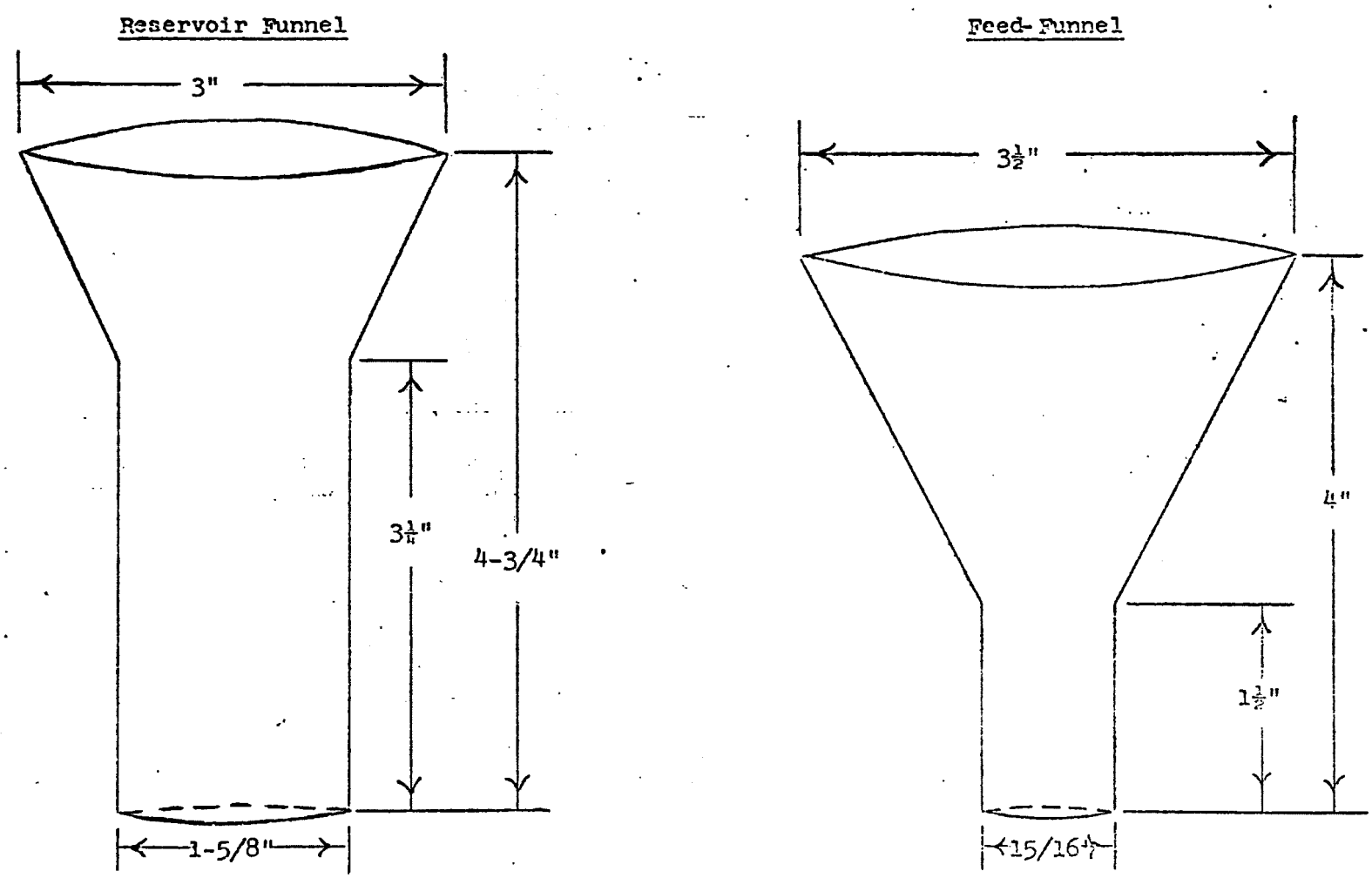

Conditions: - Glass or Metal - Actual Size

PARTICLE SIZE DISTRIBUTION

The distribution of particle sizes in a given sample is obtained by mechanically shaking a weighed amount of material through a series of test sieves, and determining the quantity retained by or passing given sieves.

Procedure

1. Reduce the sample to be tested to 100 grams by means of a riffle.*

2. Assemble the nest of five selected sieves in order of decreasing size of opening, the sieve having the largest openings mounted on top. A receiving pan is placed at the bottom under the finest sieve.

3. Place the 100.0-gram sample in the top sieve, install iron cover on top of the assembly and shake on the Ro-Tap Machine for 3 minutes with the tapper in operation.**

4. Weigh and report the per cent of material retained on each sieve.***,****

---

*The sample is carefully reduced by repeated passes through the riffle until the amount collected in one of the riffle pans is close to 100 grams. The entire contents of that pan are then emptied onto a balance accurate to 0.1 gram and weighed. No more than 5 grams should be added to or taken from the balance without additional riffling. For example, if the entire contents from the riffle pan weighed only 90 grams, the additional 10 grams should be obtained by riffling another sample down to an approximate 10-gram portion, after which the entire contents of that riffle pan are emptied onto the balance. Removing large quantities from the balance or adding large quantities from the sample stock without riffling will lead to erroneous results.

**When sieving samples which are finer than 100 mesh, the shaking time must be increased. Use 10 minute intervals until less than 2 grams are collected in the receiving pan in a 10-minute interval. For very light density and unusual shape particles, time should be extended to 10 minutes.

***The sieve should be lightly brushed with a brass wire bristle brush to free particles held in the screen.

****The analysis should be rejected if the sum of the individual fractions is less than 98 grams or more than 102 grams.

Equipment

1. Riffle, Jones Sampler - Fisher Scientific Catalog No. 4-941

2. Sieves - U.S. Standard Sieve Series, 8" Diameter, Full-Height Sieves

3. Ro-Tap - Sieve Shaker, Fisher Scientific Catalog No. 4-906

4. Brush - For Metal Surfaces, Brass Wire Bristle - Fisher Scientific Catalog No. 3-685

ATTRITION RATE

Carbon attrition rate was measured under a specific set of conditions in the apparatus shown in the schematic drawing. The basic method was to fluidize a 400 gram carbon sample at 4 ft./sec. linear velocity, and to measure the elutriation losses from the sample at 10 minute intervals. An average steady state rate of attrition was obtained from this data. The experimental procedure was as follows.

Procedure

1. Prior to the attrition study, analyze feed material for moisture content, apparent density, and particle size distribution.

2. Run a minimum fluidization test on feed sample prior to the attrition study unless the fluidization test has been run on a sample of the same material.

3. Load a 400 gram sample of the carbon to be tested through the side port of the attrition column.

4. Fluidize the bed and quickly shut gas flow off and allow the bed to settle. Record bed height.

5. Start gas flow and timer simultaneously. Set large rotameter at 70% (superficial velocity, 4 ft./sec.). Make sure small rotameter is off.

6. Determine elutriation losses every 10 minutes. Record. Save material from the first and last 30 minutes of the run.

7. Record the elapsed time, rotameter reading, rotameter exit pressure, column pressure, bed pressure drop, plate pressure drop, and the bed depth every 10 minutes.

8. Run for a minimum time of 2 hours and a maximum time of 3.5 hours. After 1.5 hours, if 3 successive dust loadings are within 0.05 gram of one another, terminate the run.

9. Weigh final bed and record.

*10. Run particle size distributions on the dust samples collected during the run. Use 80, 100, 150, 200, and 325 mesh sieves if there is sufficient material, otherwise use small sieves--100, 200, and 325.

---

*Optional analysis.

*11. Run a particle size distribution, apparent density, and moisture content on the final bed. Use appropriate sieves.

12. Calculate bed expansion and attrition rate.

---

*Optional analysis.

Figure B-1-4. Schematic diagram of apparatus used in room temperature fluidization experiments

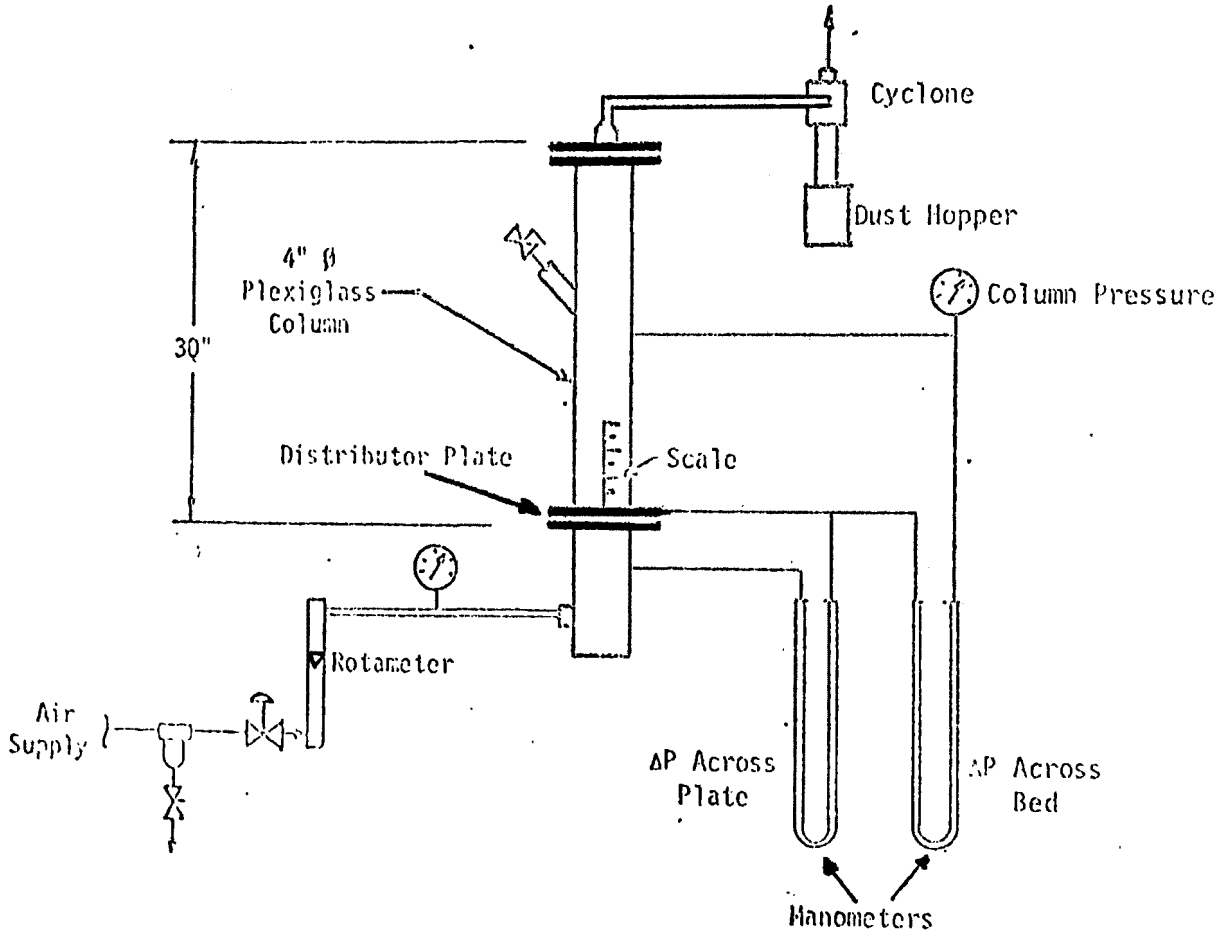

SO_2 ACTIVITY

The analytical procedure for the SO_2 activity determination is basically the same as the procedure used in the SO_2 sorption differential rate studies, which is described in detail in Section 5.1.1. The SO_2 activity analysis simply represents a special case where a specific set of conditions was used. Basically, the method involved a determination of the 5 hour average rate of SO_2 adsorption on a carbon sample in a differential reactor apparatus, under the following standard set of conditions:

Sample Size:		0.1 gm
Gas Flow Rate:		1,000 cc/min.
Temperature:		200°F
Gas Composition,	SO_2:	2,000 PPM
	NO:	150 PPM
	H_2O:	10%
	O_2:	2%
	CO_2:	11.3%
	N_2:	Balance
Adsorption Time:		5 Hours

PORE SIZE DISTRIBUTION AND SURFACE AREA

Measurement of the pore size distribution and surface area of carbon samples was made using two instruments: 1) Aminco porosimeter and 2) Engelhard Industries isorpta analyzer, Model 2A. The Aminco porosimeter was used in determining pore volumes in the 100 to 0.012 micron diameter range, while the Isorpta analyzer was used for smaller pores in the 10-1,000 Angstrom range, and for surface area determinations.

Porosimeter

The Aminco porosimeter measures pore sizes from 100 microns to 0.012 microns diameter and pore volumes as small as 0.0001 ml. Readout is digital and automatic above atmospheric pressure and visual below atmospheric pressure.

Pressure is generated by a motor-driven hydraulic pump. This pump operates a reciprocating, double-ended pressure intensifier generating pressures up to 15,000 psi in the pressure vessel.

A vacuum system is provided (less pump) for measurements below atmospheric pressure.

Procedure

1. A sample of appropriate size and porosity is placed in a penetrometer (glass tube with graduated capillary stem). The penetrometer, in turn, is placed in a filling device. A vacuum pump, available as an accessory, evacuates the filling device and permits the penetrometer to be filled with mercury. Pore sizes from 100 to 16 microns are determined with the penetrometer in this position.

2. The penetrometer is then transferred to the pressure chamber, where pressures from 0 to 15,000 psi can be applied to the mercury and where pore sizes down to 0.012 microns can be measured. As pressure is increased mercury is forced into smaller and smaller pores, the volumes of which are continuously being indicated by the digital readout as the mercury is displaced in the stem of the penetrometer. The smallest pore diameter entered by the mercury under pressure is stated in the relationship:

$$D = \frac{175}{P}$$

where D = the diameter of the pore in microns (1 micron = 10^{-4} cm. or 3.94×10^{-5} in.)

P = absolute pressure in pounds per square inch.

Pore diameters are determined from the absolute pressure on the sample. For example, if the pressure P at the sample is 1750 psi, by substitution in the formula D equals 0.1 micron. Generally the head pressure of mercury must be included in calculating absolute pressure when the diameters of large pores are being measured.

3. Pore volumes are read directly from digital readout in tenths of a microliter. The Porosimeter indicates only those pores which open to the outside surface of the sample and which the mercury is able to enter. If large openings within the sample are connected to the surface by narrow pores, their volumes will be indicated at the diameter of the narrow pore.

Isorpta Analyzer

The Englehard Industries isorpta analyzer permits low temperature nitrogen adsorption measurements to be made in a continuous flow system, at predetermined and/or uniformly spaced relative nitrogen pressure values. Using the adsorption data obtained from the Isorpta, the BET surface area and pore volume distribution of the carbon sample are determined by Roberts' Method[21]. The calculations are made by a computer program. Two options are available in the choice of pore models--the cylindrical pore and the parallel plate. The computer program is given in Appendix A-22.

Theory of Operation

In principle, the Isorpta is designed to permit variation of the total pressure of a fixed adsorbate-diluent mixture in contact with the sample so the adsorbate relative pressure can be adjusted.

In practice, a dilute mixture of nitrogen in helium is used. As an example of how the nitrogen relative pressure over the sample is determined, the nitrogen partial pressure in a 10% nitrogen in helium mixture at a total pressure of 8 atmospheres is 0.8 atmospheres, equivalent to a relative pressure of about 0.8, depending on the vapor pressure of the liquid nitrogen used to cool the sample. Consequently, to determine the adsorption at relative pressure 0.8, the pressure in the sample tube is adjusted to about 8 atmospheres. When adsorption is complete, the adsorption at relative pressure 0.3 may be determined by adjusting the pressure in the sample tube to 3 atmospheres.

To develop a complete isotherm, pressure in the sample tube is first set to some low value and adsorption measured. The pressure is increased in a stepwise manner allowing adsorption equilibration at each step. The size of the step is left to the discretion of the operator. If it is desirable, adsorption at a relative pressure over 0.9 can be determined in the first adsorption measurement. However, it is customary to develop the lower portion of the isotherm below relative pressure 0.6 before approach saturation. When the sample is saturated, pressure can be decreased in the same manner to determine points on the desorption branch of the isotherm.

While pressure in the sample tube is varied, pressure in the balance of the system is automatically controlled at some low value near atmospheric pressure, particularly in the thermal conductivity cell section. Gas composition changes measured by the thermal conductivity cell are well within the linear range of cell response, so no corrections are needed.

With the nitrogen-helium mixture over the sample, the sample is cooled to liquid nitrogen temperature causing adsorption, which is indicated by a deficiency of nitrogen measured by the thermal conductivity cell and correspondingly traced as a peak on a recorder. When, at a given relative pressure, adsorption equilibrium is established, the peak area can be measured and converted to the volume of gas adsorbed per unit weight of sample. Total adsorption at a subsequent point is equivalent to the algebraci sum of the peaks as defined by increasing or decreasing pressure.

The range of relative pressures that can be investigated is limited only by the gas composition and the saturation point. Further, other adsorbates besides nitrogen can be used in mixture with other diluents.

TOTAL ASH CONTENT

Ash is defined as the mineral oxide constituents of the carbon. Heating a sample to a temperature of 600°C in an oxidizing atmosphere will completely oxidize all carbon and convert the mineral constituents to their respective oxides.

Procedure

1. Weigh 1.00 gram of the sample into a weighed Vycor glass crucible without cover.*

2. Place crucible and contents into a muffle furnace; set at 600°C for at least 4 hours. (For high volatile materials such as coal or pitch, devolatilize first over flame burner before placing in furnace.)**

3. Remove from furnace, cool in dessicator and weigh. (Save crucible and ash for iron analysis, if desired.)

4. Per cent ash is calculated as follows:

$$\% \text{ Ash} = 100 \times \left[\frac{\text{Final Wt. of Crucible} - \text{Orig. Wt. of Empty Crucible}}{\text{Wt. of Dry Sample}}\right]$$

---

*Although Vycor glass crucibles (30-ml. capacity) are indicated in this test, platinum or porcelain crucibles may also be used.

**For black ash samples use a minimum of 16 hours.

TOTAL SULFUR CONTENT OF CARBON

Description

Weighed amount of sample is heated to 2600°F and exposed to flow of oxygen. Sample is combusted to CO_2, H_2O and SO_2 gas which is all passed through hydrogen peroxide solution in which SO_2 reacts to form sulfuric acid. Amount of H_2SO_4 is determined by titrating with caustic solution.

Materials

1. Dietert Combustion Analyzer (heated to 2600°F)
2. Dietert Combustion Boats
3. 0.06 N NaOH Solution
4. 0.9% H_2O_2 Solution
5. Methyl Red Indicator Solution
6. Cylinder Oxygen

Procedure

1. Prepare 0.06N NaOH as follows:
   a. Accurately pipette 60.0 ml. 1.0 N NaOH into a 1,000 ml. volumetric flask and bring to volume with distilled H_2O.
   b. Pour into reagent jar at analyzer marked NaOH.

2. Prepare 0.9% H_2O_2 as follows:
   a. Bring 30 ml. of 30% H_2O_2 solution to volume in a 1,000 ml. graduated cylinder with distilled H_2O.
   b. Pour into reagent jar at analyzer marked H_2O_2.

   NOTE: THIS SOLUTION MUST BE MADE FRESH EVERYDAY.

3. Prepare a standard for analysis as follows:
   a. Weigh 0.0250 gms. of sulfur and evenly distribute in the bottom of a combustion boat.
   b. Weigh 0.2500 gms. of virgin carbon, and distribute evenly over the sulfur in the combustion boat.

4. Analysis of Standard
   a. Combustion analyzer temperature should be 2600°F, ±100°F.
   b. Fill the reaction vessel to the first hash mark (50 ml.) with the H_2O_2 solution; add 1 drop of NaOH from the burette and 2 drops of methyl red indicator.
   c. Place the combustion boat containing the sample into the combustion tube. Insert ramrod assembly until the rubber stopper fits snugly and turn on the O_2 to a flow rate of ~1.5 l./m. DO NOT SHOVE THE BOAT INTO TUBE.
   d. Place the gas dispersion tube coming from the analyzer into the H_2O_2 solution.

e. Shove the boat 1/2 way into the combustion tube using the ramrod. Wait ~15 seconds and then shove the boat fully into the hot zone of the tube and withdraw the ramrod.

NOTE: IF THE BOAT WERE SHOVED IMMEDIATELY INTO THE HOT ZONE, THE TUBE MAY CRACK, NECESSITATING REPLACEMENT.

f. Titrate the solution until there is no longer a yellow to pink color change, indicating the end point has been reached and all of the sulfur has been oxidized.
g. Record the total volume of NaOH used.
h. Drain the reaction vessel and rinse with distilled H_2O. Turn off the O_2, remove ramrod assembly from the tube, and remove the boat from the tube, utilizing the sample retreiver. Place the hot boat in the stainless steel receptacle under the table.
i. The total volume of NaOH used for the titration should be 26.2±1.2 ml. If there is a deviation from this, check the following:
   1) Normality of NaOH solution
   2) Weight of sulfur used in the standard
   3) For a cracked combustion tube
   4) Any other gas leaks in the system.
   5) DO NOT PROCEED until the situation is remedied.

5. Analysis of Carbon Sample
   a. Weigh 0.2500 gms. of sample and place in a combustion boat.
   b. Analyze the same as for a standard sample, Steps 4a-4h.

6. Calculation of Sulfur Content, in %
   a. Multiply the total volume of NaOH used by 0.4.

(ml. 0.06 N NaOH Used x 0.4)

MOISTURE CONTENT*

Procedure

Weigh carefully about 5.0 grams of carbon into a tared low form weighing bottle. Place in an oven and allow to dry 3 hours at 110°C or 1 hour at 140°C. Cool in a desiccator and weigh with cover on.**

$$\% \text{ Moist.} = \frac{(\text{Wt. of Dish \& Sample}) - (\text{Wt. of Dish \& Dried Sample})}{\text{Wt. of Sample}} \times 100$$

---

*This test is intended only for determining the moisture content of a sample of carbon. If a larger sample is to be dried, a longer time will be required depending on the size of sample and type of container.

**For a coal sample use a vacuum oven at 100°C for 3 hours.

DIRECT TITRATION OF H_2SO_4 CONTENT OF CARBON

Description

The amount of sorbed acid is determined by direct acid-base titration using caustic. A weighed amount of sample is boiled in water and the amount of acid leached off is determined by direct titration.

Materials

1. Hot Plate
2. Magnetic Stirrer
3. 50 ml. Burette
4. 250 ml. Beaker
5. 0.1 N NaOH and 0.03N NaOH
6. Watch Glass
7. Methyl Red Indicator

Procedure

1. Prepare 0.1 N NaOH and 0.03 N NaOH as follows:
   a. Accurately pipette 100.0 ml. of 1.0 N NaOH into a 1,000 ml. volumetric flask and bring to volume with distilled H_2O. Use 30 ml. for 0.03 N NaOH.
   b. Rinse burette with this solution, empty, and refill to 0 ml. mark.

2. Analysis of Sample
   a. Weigh 1.0000 gms. of sample to be analyzed and transfer to a 250 ml. beaker containing 50 ml. of distilled H_2O.
   b. Cover beaker with a watch glass and bring to a slow boil on the hot plate. Boil for 5 minutes.
      1) After sample has boiled for 5 minutes, remove from hot plate, place on magnetic stirrer and add 7 - 15 drops of methyl red solution.
      2) Titrate to end point with 0.1 N NaOH.
   c. Repeat this procedure for two more boiling-titration series.
   d. Record total volume of NaOH used.

3. Calculation of H_2SO_4 Content

$$\% \ H_2SO_4 = (\text{ml. } 0.1 \text{ N NaOH})(0.49)$$

$$\% \ H_2SO_4 = (\text{ml. } 0.03 \text{ N NaOH})(0.147)$$

DETERMINATION OF SULFUR CONTENT IN GAS PHASE

A method was set up to measure the sulfur content in the gas phase for operation of the sulfur recovery step during periods other than during integral operation or before the sulfur condenser was installed.

A sulfur trap similar to those for the gas chromatograph was utilized for this purpose. The complete system (Figure B-1-5) consists of the trap, a H_2S adsorber, a sample pump and a wet test meter. The pump continuously pulls a sample of vapor through the trap where sulfur condenses and through a bubbler system containing NaOH which reacts with H_2S to form Na_2S and H_2O, thus preventing carry-over of H_2S into the sample pump and wet test meter. The latter records the total volume of nitrogen and hydrogen passing through the system. Sulfur is extracted from the condenser by carbon disulfide and recovered. Comparison of the gas volume corrected for H_2S measured by the gas chromatograph) and the weighed sulfur yields the sulfur vapor concentration.

Figure B-1-5. Sulfur sampling system

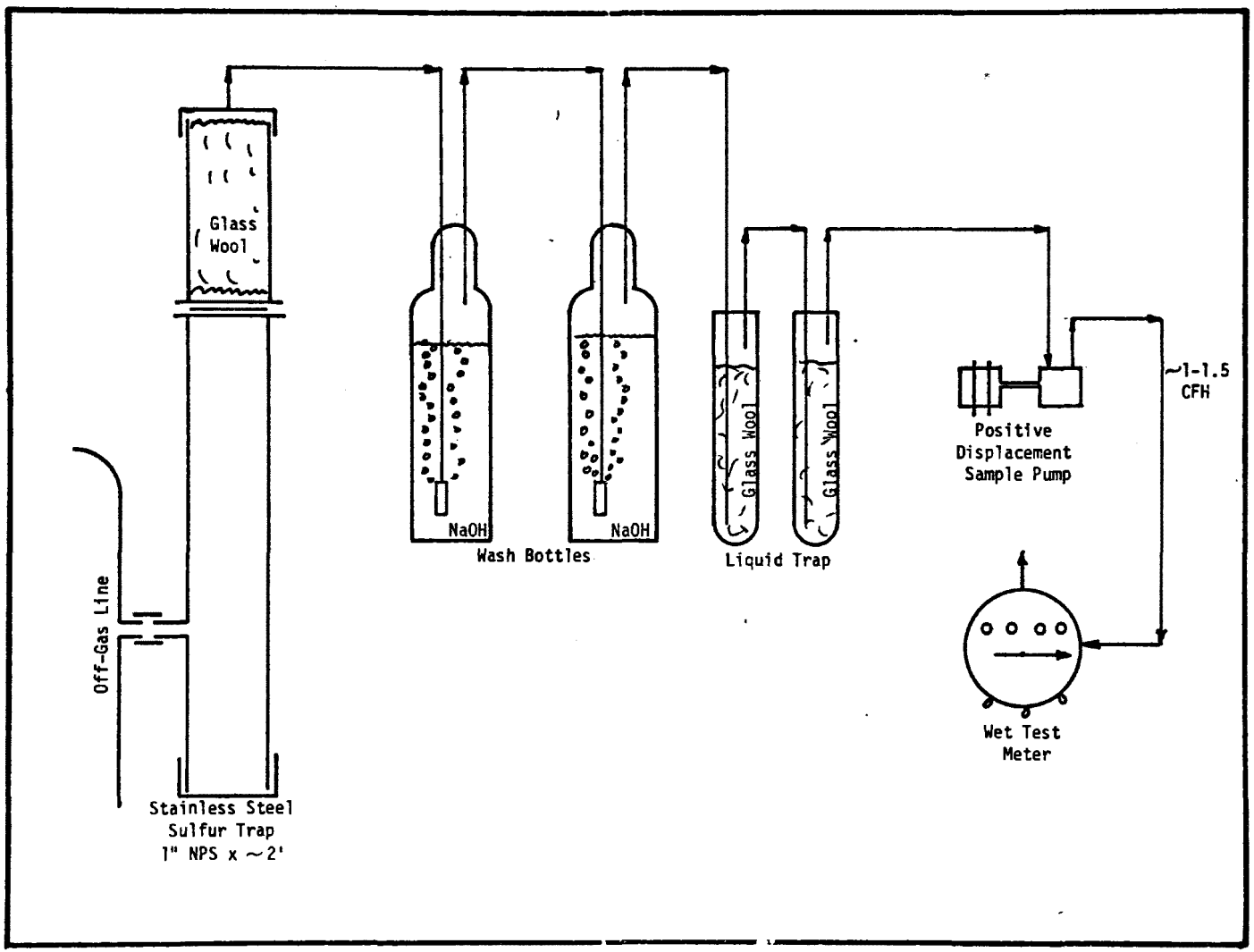

SO_2 ACTIVITY ANALYTICAL PROCEDURE

Procedure

Sample Preparation

1. Remove oven from around the sample envelope. This part of the operation involves two people, one to hold the top half of the oven while the other removes the bottom half.

   CAUTION: WHEN LOWERING THE LAB JACK TO ALLOW THE OVEN TO BE REMOVED, DO NOT LOWER BELOW THE LEVEL OF THE STOPCOCK ON THE ADJACENT McLEON GAUGE.

   Move the lab jack from under the sample enveloper.

2. Remove the sample envelope. Before the sample envelope can be removed the preheat coil of 1/16" stainless steel tubing must be removed and the Swagelok unions disconnected.

   a. Remove heating tape from around the Swagelok union on the inlet manifold and open union with the two wrenches (9/16" and 1/2"). With the two 7/16" wrenches open the union leading into the nozzle (see Item K in Figure B-1-6). Remove the preheat coil. Next, open the Swagelok union leading from the purge rotameter and unplug the thermocouple.

   b. Very carefully loosen the ball joint clamp (Item B in Fig. B-1-6) but do not remove the clamp. This will enable the dispersion nozzle to be carefully rotated out of the bucket and to the side of the bucket. When the nozzle is positioned so that the bucket will pass freely by it when the envelope is lowered, retighten the clamp.

      CAUTION: THE QUARTZ BUCKET IS VERY FRAGILE AND SHOULD NOT BE SUBJECTED TO ANY BUMPS OF THE NOZZLE OR CRUSHED BETWEEN THE NOZZLE AND THE SAMPLE ENVELOPE.

   c. With the nozzle out of the bucket it is now possible to remove the sample envelope. While holding the envelope in place with one hand, loosen the larger ball joint clamp (Item A in Fig. B-1-6) with the other hand and remove. Use the second hand to hold the nozzle away from the bucket while the envelope is slowly lowered away from the bucket.

Figure B-1-6. Detail of sorption apparatus sample bucket envelope

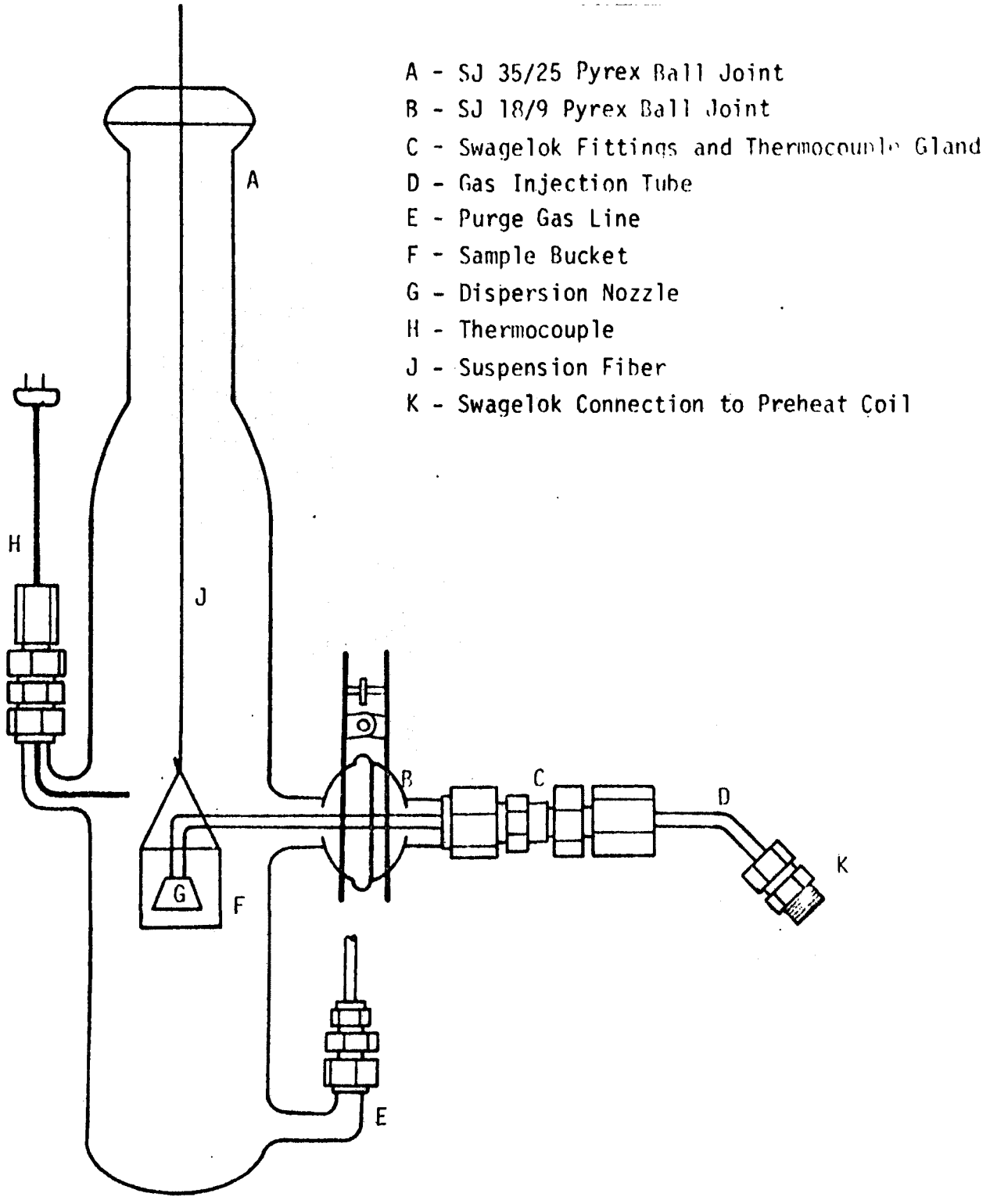

CAUTION: WHEN LOWERING THE ENVELOPE, BRING THE ENVELOPE STRAIGHT DOWN SO AS NOT TO TOUCH THE BUCKET OR THE FIBER THE BUCKET IS SUSPENDED FROM WITH ANY PART OF THE ENVELOPE.

3. Replace the sample. The bucket is lifted off the balance by bringing a sample pan under the bucket and slowly raising until the bucket lifts off the fiber. Forceps are used in handling the bucket while off the balance. The forceps are for lifting the bucket by the bail. Do not squeeze the forceps on the bail or it will break. To empty the bucket, place the bucket on a clean sheet of paper and using a cotton swab turn the bucket over onto its side. Now, insert the swab in the bucket so it can be burned upside down and the carbon poured out. Now, reright the bucket with the forceps and return to the sample pan. On the Mettler balance, weigh out approximately 100 mg of new sample into the bucket. Return the bucket to the sample pan and tap the sample pan gently to spread the carbon sample over the bottom of the bucket. Return the bucket to the balance and reverse the procedure previously outlined to replace the sample envelope. When replacing the nozzle in the bucket, be sure to center the bucket in the envelope and center the nozzle in the bucket.

4. Replace the oven. When the sample envelope has been replaced and the ball joint clamps tightened, replace the preheat coil and tighten the Swagelok unions. Reconnect the purge line and tighten the Swagelok union. Plug in the thermocouple and rewrap the heating tape around the inlet manifold leading to the preheat coil. Now the oven may be replaced.

CAUTION: DO NOT BUMP THE SAMPLE ENVELOPE WITH THE OVEN. ALSO BE CAREFUL OF ADJACENT EQUIPMENT.

When raising the lab jack, raise the oven until it is just under the bottom of the sample envelope but not touching it. Replace the top of the oven and carefully fill in the cracks and open space with glass wool for insulation.

5. Outgas the carbon sample. Plug in the fan motor on the oven and turn on the regulator (Item G on Figure B-1-7). Plug in the heating tape on the inlet manifold and start a low flow of nitrogen on the purge rotameter (stainless steel float should be set at 9.0 cm). Open the inlet manifold to the sample and close the exit by means of the two toggle valves (Items L and M on Fig. B-1-7). Turn on the Cahn balance and start a flow of nitrogen to the sample by opening the rotameter all the way. Turn on the recorder at a slow chart speed. Turn the recorder range dial on the Cahn balance control box to 10 and center pen on the chart with the Mass Dial. For calibration and operation of the balance refer to the instruction manual.
While the temperature in the oven is equilibrating to 200°F the nitrogen will be purging the water off the sample.

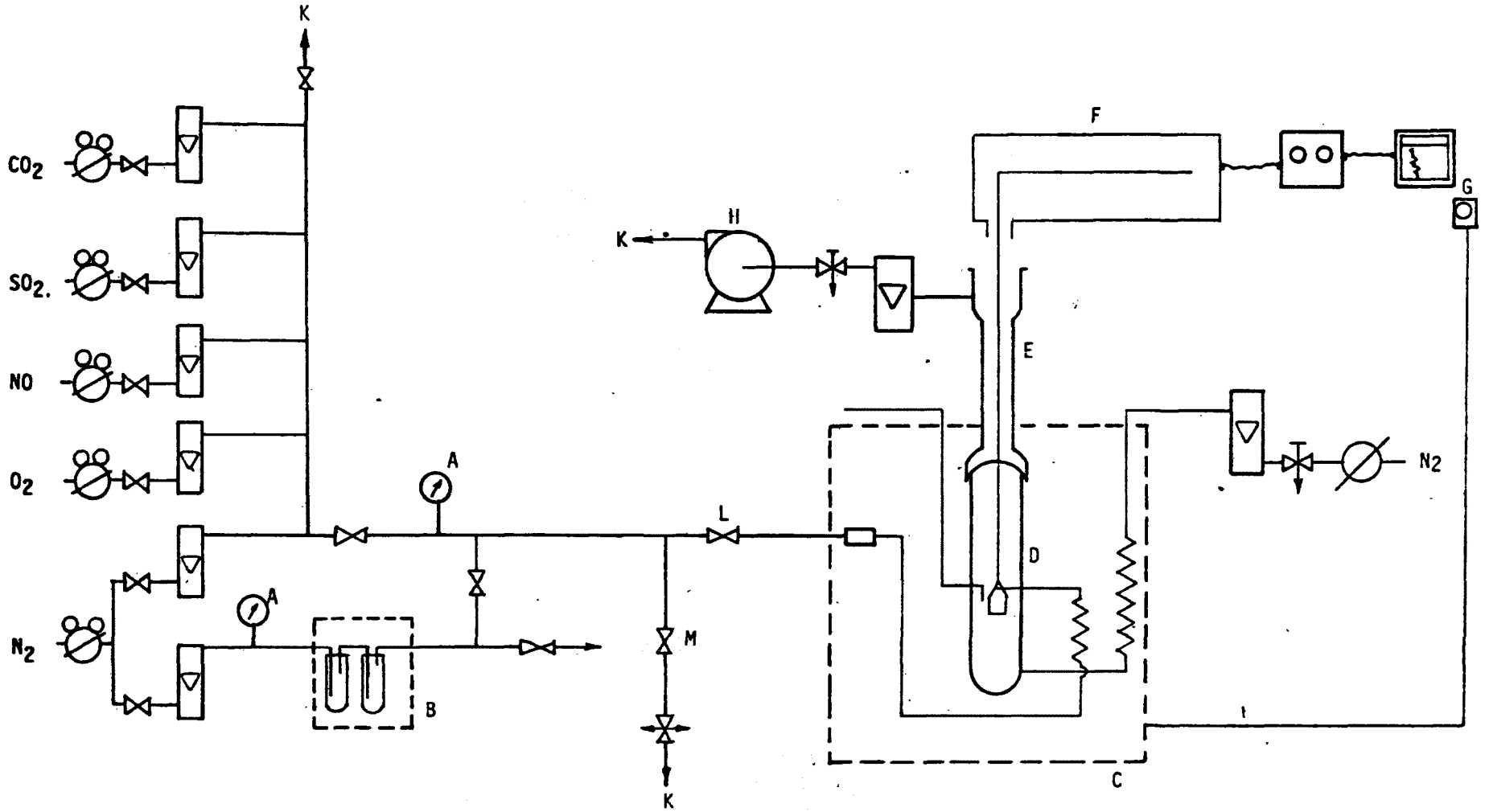

A - Magnehelic Pressure Gauge
B - Humidifier Thermostat
C - Sample Thermostat
D - Bucket Envelope
E - Fiber Envelope
F - Electrobalance
G - Oven Temperature Regulator
H - Vacuum Pump
J - Thermocouple
K - Vent
L - Inlet Toggle Valve
M - Exit Toggle Valve

Figure B-1-7. Sorption rate apparatus

Sorption Runs

While the sample is being outgassed and the temperature is equilibrating, the flows for the mixture gas can be calculated.

Flow Calculation

A sample work sheet has been included (Fig. B-1-8) for illustration. The concentrations of SO_2, NO, O_2, and H_2O must be decided first in addition to the total flow rate of the gas and the temperature of the run. The majority of the runs have been made with nitrogen as the diluent gas and the total flow gas should be 1,000 cc/min. or less. A higher flow rate could cause too much turbulence around the sample and actually blow the sample out of the bucket.

The SO_2 and NO tanks will have been previously calibrated so their tank concentrations are known.

Current experiments have involved a 10% concentration of water. For this concentration the temperature of the humidifier bath has been maintained at 60°C. It is important that the flow of gas through the humidifier should not exceed about 450 cc/min. For higher water concentrations the humidifier temperature would have to be raised. For calculating the gas flow through the humidifier refer to 1 in the sample calculation. P_m is the manifold pressure and is used in correcting the flows for daily changes in barometric pressure. P_{bar} is the barometric pressure and must be corrected for expansion of the brass scale due to temperature changes (see the HANDBOOK OF CHEMISTRY AND PHYSICS, pp. E-21 - E-22 for corrections). P_{H_2O} is the saturated vapor pressure of the water at the temperature of the humidifier bath. This information can be found in the HANDBOOK OF CHEMISTRY AND PHYSICS, pp. E-6 - E-11.

After the P_m and the flow of nitrogen through the humidifier (F_{N_2/H_2O}) have been calculated, P_H, the pressure in the humidifier must be calculated in order to correct the flow on the N_2/H_2O rotameter, 2 on the sample calculation sheet. This rotameter setting and the subsequent rotameter settings can be found in a notebook labeled "Rotameter Calibrations".

In 3 the concentrations of the other gases are calculated and the rotameter settings corrected. And finally in 4, the amount of dry nitrogen required to bring the total flow up to the amount desired is determined by subtracting the sum of all other gases from the total flow and correcting for the rotameter setting. The nitrogen, SO_2, and NO rotameters have dual floats for a wider range of flows and it is better to use the float that is closer to the midrange of the rotameter rather than the one closer to one end or the other of the scale. On the sample calculation sheet, the (S) or (G) after a rotameter setting indicates a stainless steel float (silver) or a glass float (black).

Figure B-1-8. Sample calculations

RUN _____

DATE _____

CARBON _____

TEMPERATURE _____

REASON FOR RUN _____

Work Sheet Page _____

F_T = 1000 cc/min

$F_{H_2O} = \frac{\% H_2O}{100} \times F_T = \frac{10\%}{100\%} \times 1000$ — 100.0 H_2O

$P_m = 1.87\,(.0224\,F_T + 0.42) + P_{bar}$ (768.5) — 811.2

$F_{N_2/H_2O} = F_{H_2O}\left(\frac{P_m}{F_{H_2O}} - 1\right) =$ (145.2) — 443.7 N_2/H_2O ①

$P_H = 1.87\,(.0167\,F_{N_2/H_2O} + 32.2) + P_m =$ — 885.2

$F^{set}_{N_2/H_2O} = F_{N_2/H_2O} \Big/ \sqrt{P_H/760} =$ — 411.1 Rota. = 7.95(S) ②

$F_{SO_2} = \frac{C_{SO_2}}{C_{tank}} \times F_T = \frac{2000\ ppm}{9621\ ppm} \times 1000$ — 207.9 SO_2 ③

$F^{set}_{SO_2} = F_{SO_2} \Big/ \sqrt{P_m/760}$ — 201.2 Rota. = 4.90(G)

$F_{NO} = \frac{C_{NO}}{C_{tank}} \times F_T = \frac{150\ ppm}{3142\ ppm} \times 1000$ — 47.7 NO

$F^{set}_{NO} = F_{NO} \Big/ \sqrt{P_m/760}$ — 46.2 Rota. = 4.10(G)

$F_{O_2} = \frac{\% O_2}{100} \times F_T = \frac{2\%}{100\%} \times 1000$ — 20.0 O_2

$F^{set}_{O_2} = F_{O_2} \Big/ \sqrt{P_m/760}$ — 19.4 Rota. = 47.0

$F_{CO_2} = \frac{\% CO_2}{100} \times F_T = \frac{11.3\%}{100\%} \times 1000$ — 113.0 CO_2

$F^{set}_{CO_2} = F_{CO_2} \Big/ \sqrt{P_m/760}$ — 109.4 Rota. = 8.40(S)

$F_{N_2} = F_T - (F_{H_2O} + F_{N_2/H_2O} + F_{SO_2} + F_{NO} + F_{O_2} + F_{CO_2}) =$ — 67.7 N_2 ④

$F^{set}_{N_2} = F_{N_2} \Big/ \sqrt{P_m/760}$ — 65.5 Rota. = 4.55(G)

Starting the Run

After the sample has reached the experimental temperature and the flows have been calculated, the run can be started.

1. Determining Dry Sample Weight: Bypass the nitrogen flow to the sample by opening the vent toggle valve (Item M in Figure B-1-7) and closing the sample inlet valve (Item L in Fig. B-1-7). Turn off the purge rotameter. Zero the recorder with the Mass Dial and record the Mass Dial reading as four digits after the decimal (e.g., 0.5328). The weight of the sample will correspond to the Mass Dial reading times the Mass Dial Range (far left knob). For example, if the Mass Dial Range is set at 200 and the Mass Dial reads 0.5328, the sample weight is 200 x 0.5328 or 106.56 mg. After determining the dry sample weight, turn the purge rotameter back on to 9.0 cm to keep air out of the sample envelope.

2. With the sample still bypassed (toggle valve M open, L closed), start mixing the gases. The rotameter for the O_2 is highly stable but difficult to set and for this reason a toggle valve at the tank is used to control the flow of O_2 to the system. Little if any adjustment will need to be done to this rotameter. The CO_2 rotameter is at the tank and has only the single float. After the O_2 toggle valve is opened, the CO_2 rotameter set, and the NO, SO_2, and N_2 rotameters set, open the line from the humidifier and set the N_2/H_2O rotameter. To open the humidifier line, close the Vent toggle valve and open the Run toggle valve. After the water is added the flows will probably all need to be readjusted. Allow the flows to equilibrate for 4 - 5 minutes before starting the run. Meanwhile, set the timer to 00000.0, put the chart speed on 1 inch per minute (the recorder has the D gear set in place) and line up the recorder on a heavy line and turn to standby. With the recorder turned to standby, set the Mass Dial approximately 6 mg heavier (e.g., if the dry weight is 0.5328 set the Mass Dial at 0.5600) and record this Mass Dial reading on the chart at time zero. Plug in the vacuum pump and the run is ready to be started.

3. Starting the run will involve a second person to open and close the toggle valves L and M, respectively. In general, the practice has been to start a run when the second hand on the wall clock hits 12. Fifteen seconds before starting, the vacuum pump rotameter is set at 15.0 cm. When the second hand hits 12, one person opens toggle valve L and closes toggle valve M and the other person starts the timer and turns the recorder from standby to on. The recorder pen will immediately jump up scale which is the result of the sudden force of the mixture gas on the bucket. If, however, the pen does not remain on scale, turn the Mass Dial to a higher number (perhaps 0.5800) and record this new Mass Dial reading on the chart. At the end of the first twelve minutes, turn the chart speed down to 10 inches per hour. This is accomplished most efficiently if the in./min. to in./hr. inner switch is changed first and the outer switch is changed from 1 to 10 (on the D gear set). For more

complete instructions on operating the recorder, including refilling the chart or pen, refer to the instruction manual.
At this point, the run needs only to be periodically monitored, that is, if the pen goes off scale reset the Mass Dial so the recorder pen is close to zero, and record the new Mass Dial reading on the chart and also check the rotameter settings frequently and readjust if necessary. For convenience in later calculations, the Mass Dial should be set at a round number except when determining dry weight and final weights (e.g., set the Mass Dial at 0.6400 rather than 0.6387).

Ending the Run

When the run has been completed (usually 300 minutes), close valve L and open valve M. Turn off the purge rotameter and the vacuum pump rotameter and re-zero the recorder with the Mass Dial as quickly as possible. Record this weight on the chart and turn the vacuum pump rotameter back to 15.0 cm. Turn off the timer switch. Reduce the chart speed and turn the purge rotameter back to 9.0 cm. With the mixture gas bypassed from the sample, turn off the CO_2, SO_2, NO and N_2/H_2O rotameters. Turn off the O_2 toggle valve and loosen the Swagelok connection just below the toggle valve to vent the O_2 line. Retighten this Swagelok connection when the O_2 rotameter reads 0 and turn off the humidifier line by opening the Vent valve and closing the Run valve. Open the nitrogen rotameter completely and reopen toggle valve L and close valve M. This will purge the water off the sample that is dissolved in the acid on the carbon. When the recorder trace has leveled off indicating a constant weight, turn off the purge rotameter and the vacuum pump rotameter and open valve M and close valve L. Turn off the nitrogen rotameter and rezero the recorder with the Mass Dial and record the dry weight. Turn the recorder to standby, the recorder range switch on the balance control box to Z, the Cahn balance to off, and the oven temperature regulator off. Unplug the vacuum pump and unplug the fan motor to the oven. Unplug the heating tape on the inlet manifold and on Friday evening turn the humidifier temperature bath off. (Be sure to turn this on again first thing Monday morning). Turning off the humidifier bath over the weekend slows down the evaporation of water from the humidifier and requires less frequent filling of the humidifier bubblers.

Calculations at End of Run

At the end of the run the total amount of sulfuric acid is measured on a dry basis. The information is used in calculating an integral rate of reaction. The sample calculation and typical strip chart from a run is given below.

Integral Rate Calculations

Sample Calculation Run No. 301

$$\text{Integral Rate} = \left(\frac{\text{Final Dry Wt.} - \text{Starting Dry Wt. of C}}{\text{Starting Dry Wt. of C}}\right) \div \text{Total Time, min.}$$

1 Starting Dry Wt. of C = Dry Wt. (Mass Dial Reading) x 200 (Dial Range)
= .5327 x 200 = 106.54 mg.

2 Final Dry Wt. = Dry Wt. x 200
= .6294 x 200 = 125.88 mg.

$$\text{Integral Rate} = \left(\frac{125.88 - 106.54}{106.54}\right) \div 300$$

$$= .0006051$$

or

$$.6051 \times 10^{-3}$$

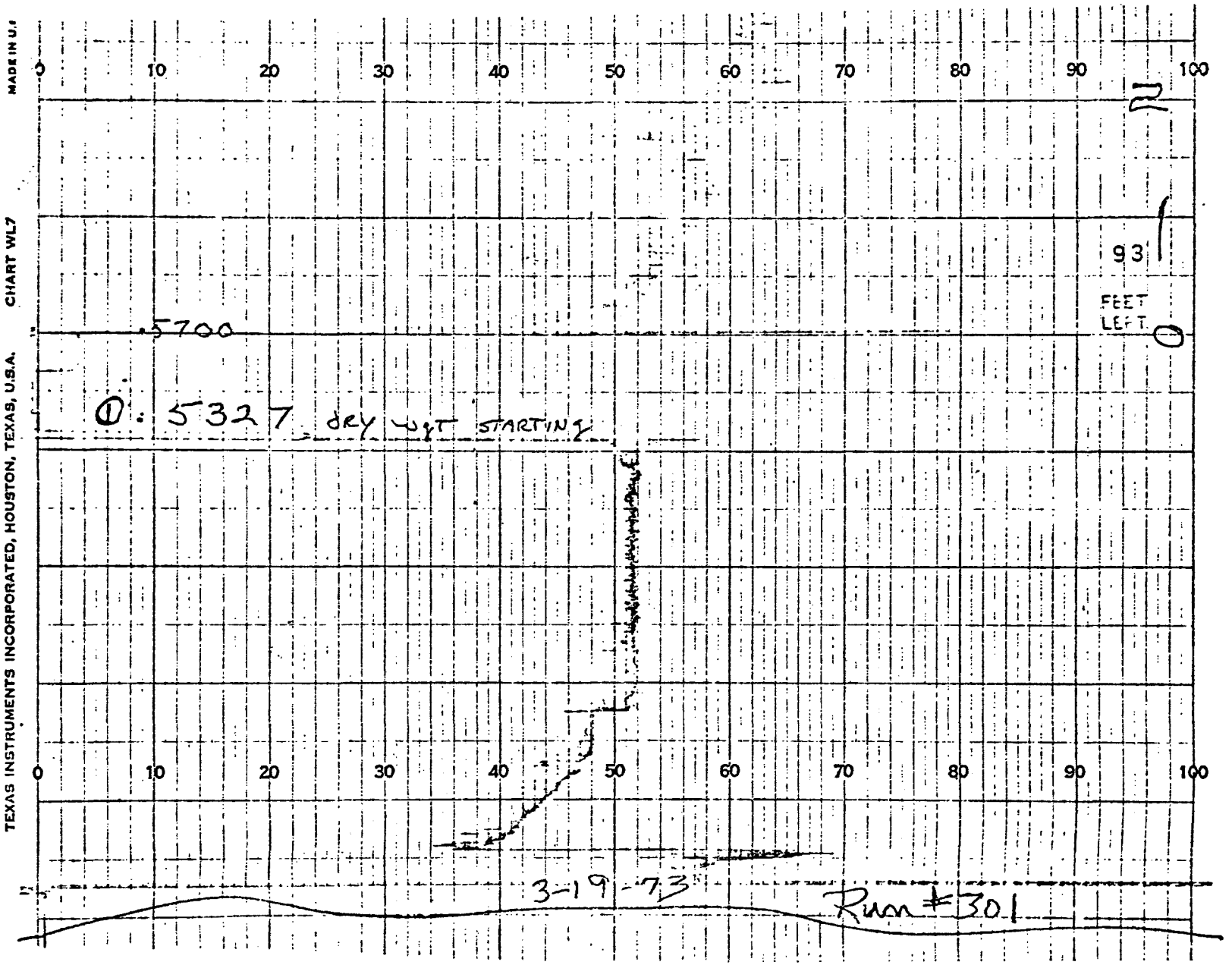
TEXAS INSTRUMENTS INCORPORATED, HOUSTON, TEXAS, U.S.A.
CHART WL7
MADE IN U.S.
0 10 20 30 40 50 60 70 80 90 100
.5700
0: 5327 dry wgt starting
93
FEET LEFT
0
3-19-73
Run #301

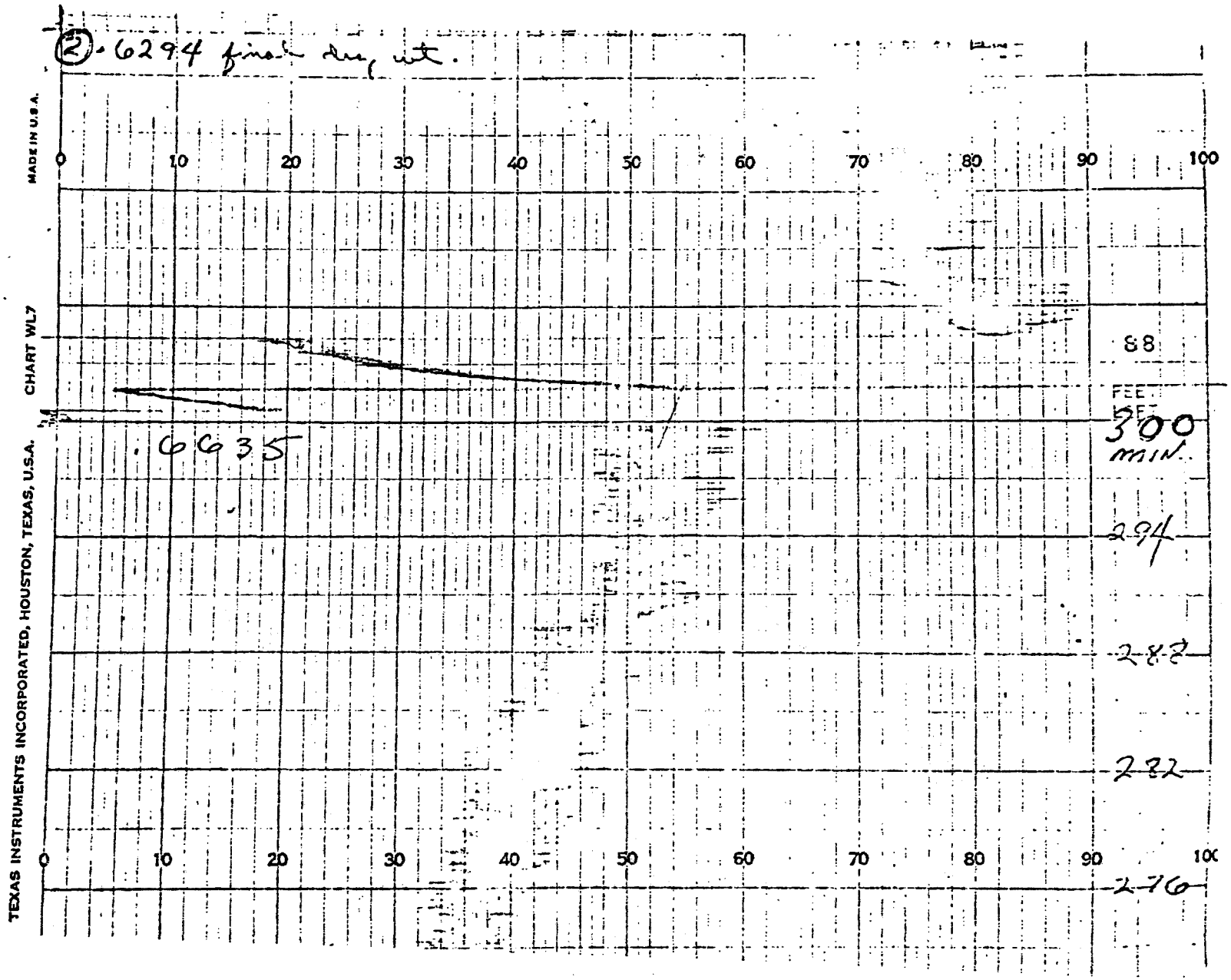
(2) .6294 final dry wt.
.6635
0
10
20
30
40
50
60
70
80
90
100
88
FEET
300
MIN.
294
288
282
276
MADE IN U.S.A.
CHART WL7
TEXAS INSTRUMENTS INCORPORATED, HOUSTON, TEXAS, U.S.A.

APPENDIX B-2

INTEGRAL PILOT PLANT OPERATION

Introduction

The initial integral run, representing the first operation of the pilot plant after mechanical integration of the equipment was completed, is described in this section of the Appendix. Preparatory work such as drawing up procedures for start-up, shutdown, and data acquisition is presented, as well as the initial process performance goals. Run conditions are given, and the results of the run are discussed, including material balances. To summarize the run results, process performance goals generally were met or exceeded, and the equipment operated for about 28 hours, which was equivalent to two full carbon cycles, or inventory turnovers.

Run Preparation

Preparation was made for an extended integrated run. This preparation included, besides that of mechanical and instrumentation, that of setting of run conditions, of start-up and shutdown procedures, and of data acquisition and preliminary trend analysis. The run conditions are basically those as given in Table B-2-1. In line with those conditions, target goals were set as follows:

1) SO_2 Removal - 90%
2) H_2S Utilization - 95%
3) Acid Conversion to S - 99%
4) H_2 Utilization - 90%
5) Sulfur Recovery - 25% of Stripper/H_2S Gen. Feed

The start-up and shutdown procedures were written to incorporate the modified operating procedures caused by integration of all of the pilot equipment. The major differences from past procedures relate to carbon recirculation control from one unit to the next. As mentioned in the mechanical section, all of the carbon flow loop has been checked out satisfactorily. The operating procedures were, therefore, developed from the tests.

The data acquisition covers what variables to be monitored and recorded and at what frequency. Also, log sheets were prepared for the variable responses to be recorded. There were seven log sheets prepared which included three for gas analyses, one for carbon analyses, one for carbon material balances, one for

Table B-2-1. RUN CONDITIONS

RECYCLE CARBON RATE: 30 Lbs./Hr.

SO_2 SORBER

Inlet Flue Gas Rate:	22,650 ACFH @ 300°F
Inlet Adsorber Gas Comp.:	SO_2 - 1600 ppm SO_3 - 40 ppm NO - 150 ppm O_2 - 3.4% H_2O - 13% CO_2 - 11% N_2 - 72.4% } Nominal stack conditions; no adjustments will be made except inlet SO_2 to maintain 1600 ppm.
Reactor Temperature:	Stage 1 - 300°F Stage 2 - 160°F (Water Spray Stage) Stages 3 - 5 - 170-180°F (No Control - Seek Own Level)

SULFUR GENERATOR

Inlet N_2 Rate:	175.6 CFH @ 70°F
Inlet H_2S Rate:	71.6 CFH @ 70°F
Inlet Gas Composition:	H_2S - 28.1% N_2 - 71.9%
Reactor Temperature:	275°F (Average) 255-285°F (Range Reactor Bottom to Top)

SULFUR STRIPPER/H_2S GENERATOR

Inlet Gas Rate:	H_2 - 75.4 CFH @ 70°F N_2 - 175.6 CFH @ 70°F
Inlet Gas Rate:	H_2 - 30% N_2 - 70%
Reactor Temperature:	1200°F (Average Gas) 1000-1250°F (Range in Gas)
Carbon Flow Split:	15% to Top Stage (4.5 Lbs./Hr.) 85% to Stage 4 (26.5 Lbs./Hr.)

CARBON CONDITIONER

Inlet Gas Rate:	Air - 430 CFH @ 70°F Steam - 802 CFH @ 70°F
Gas Composition:	Air - 35% (Volume) Steam - 65% (Volume)
Temperature:	300°F

CARBON PREHEATER TEMPERATURE: 600°F

gas flow rates and pressure drops and temperature, and one for critical process response variables. One gas analysis log sheet is for routine determination every 4 hours of the flue gas concentrations of SO_2, O_2, and H_2O at the inlet and outlet of the SO_2 sorber. The other two gas analysis log sheets are for routine determination of the gas concentrations of H_2O, CO_2, H_2S, H_2, N_2, CO and SO_2 at the inlet and outlet of the sulfur generator and H_2S generator/sulfur stripper every 4 hours. The carbon analysis log sheet is for the routine determination every 4 hours of the total sulfur, acid and moisture content of carbon samples from the SO_2 sorber, carbon preconditioner, sulfur generator, and H_2S generator/sulfur stripper. The same analyses would be made for the intermediate stages but on a less frequent basis of every one to two days. The carbon material balance log sheet is for routine tabulation of carbon added or removed from the integral pilot plant as dust or granular carbon. The carbon samples are taken on an 8 hour or daily basis and the dust collection is on a similar sheet for recording these variables every 8 hours for all of the units.

The primary log sheet is for the critical process variables. To run the pilot plant on an extended run basis following all of the variables constantly would require a sizeable effort in itself. For this reason 32 process variables were picked as primary indicators of the smooth operation of the integral pilot plant. This does not mean the other variables are ignored, but rather are recorded on a less frequent basis. This log sheet is shown in Figure B-2-1 because of the importance in pilot plant control and operation. These 32 points are indicated in Dwg. No. 2528A in Appendix B-3 and include 10 temperatures, 8 pressures or pressure drops, 7 gas flow rates, 5 indications of carbon flow, and 2 indicators of stable sulfur condenser operation.

To allow preliminary trend analysis during the run, preparation was made to calculate and plot several responses during the course of the run. At the end of the run a more detailed data analysis would be made. The responses which are calculated several times each day are SO_2 removal efficiency, H_2S utilization efficiency, H_2 utilization and conversion to H_2S efficiency, sulfuric acid conversion to H_2S, and carbon attrition rate. A running plot will be made of these responses to allow a quick effect evaluation of carbon cycling on the variable. Besides these efficiencies, material balances will be made daily for sulfur, H_2, H_2S, and carbon to lend credence to the results being obtained. The material balance will be particularly important in assessing possible needs of recalibration of gas analysis equipment.

FIGURE B-2-1

OPERATING LOG 1

RUN NO._____ DATE_____

FEED_____

TIME	TEMPERATURES										PRESSURES								GAS FLOW							CARBON FLOW					S CONDENSER	
	FDS. INLET	FDS. SPRAY STG.	DUST COLL.	CARBON COND.	8"Ø REACT.	4"Ø REACT. STG. 4	4"Ø REACT. STG. 8	4"Ø FILTER	RECYCLE SULFUR	SULFUR COND. COOLING WATER	8"Ø INLET	4"Ø INLET	10"Ø INLET	10"Ø OUTLET	DUST COLLEC.	8"Ø FILTER	6"Ø FILTER	4"Ø FILTER	H_2S 4"Ø REACT.	N_2 8"Ø REACT.	H_2 4"Ø REACT.	N_2 4"Ø REACT.	FLUE GAS	SO_2	RECYCLE H_2S	2"Ø REACTOR LEVEL CONTR.	2"Ø REACTOR SEAL P	4"Ø PRE-HTR. LEVEL CONTR.	4"Ø PRE-HTR. SEAL P	CONDIT. ΔP	SULFUR POT LEVEL	PUMP STPS
	1	2	3	4	5	6	7	8	9	10	11	12	13	14	15	16	17	18	19	20	21	22	23	24	25	26	27	28	29	30	31	32

The advance preparation made should insure a more meaningful set of results in line with attaining the target goals mentioned above. Particularly it should make us more aware of process changes that might be necessary to meet the goals.

Integral Run

In preparation for a 15 day run in the SO_2 pilot plant, a shorter run was made to evaluate the system under extended operation. During the run all equipment was operated at anticipated process conditions and cylinder H_2S was used. The initial goal was to attain at least 3 cycles. Equipment operation was stable at the end of 2 cycles when an emergency shutdown of the boiler, estimated to last several days, resulted in the shutdown of the SO_2 removal equipment. In general, the goals of SO_2 removal, regeneration gas utilization, and conversions were approached or exceeded.

Operating Conditions

The average operating conditions and carbon and gas analyses are given in Table B-2-2. The carbon was circulated through the pilot plant at a carbon rate of 28.9 lbs. C/hr. The SO_2 sorber was run at 3 ft./sec. with an inlet SO_2 concentration of 1600 ppm. The temperature of the bottom stage was held at about 300°F, the temperature on the second stage was controlled at about 160°F with a water srpay, and the temperature of the subsequent stages averaged about 180°F. The SO_2 removal efficiency was such that an acid loading of 0.216 lb. acid/lb. C was obtained compared to the goal of at least 0.18 lb. acid/lb. C loading. The sulfur generator was run at about 0.3 ft./sec. with an inlet H_2S concentration of about 30 volume %. The temperature was controlled by the moisture content and carbon temperature set in the carbon preconditioner. The conditions in that unit were about 310°F at a steam concentration of about 65% to maintain an acid solution on the carbon of about 0.72 lb. acid/(lb. acid + lb. H_2O). This was estimated to be sufficient to minimize the premature evolution of H_2SO_4 as SO_2.

The H_2S generator/sulfur stripper was run at 2.5 ft./sec. at 1200°F with an inlet H_2 concentration of about 30 volume %. The average temperature of the unit was about 1200°F with temperatures ranging from about 850 to 1500°F. The lowest temperature of 850°F was on the fourth stage where the preheated carbon of about 600°F was fed. The higher temperature, near 1500°F, occurred on Stages 5 and 6. The cause of this high temperature is being rectified.

TABLE B-2-2. AVERAGE OPERATING CONDITIONS AND CARBON AND GAS ANALYSES

UNIT	TEMP., °F		PRES. DROP	GAS FLOW RATE, CFH @ 70°F						TOTAL S ANALYSIS ON C, %		H_2SO_4 AND S CONTENTS ON CARBON				GAS CONCENTRATION INLET*, %				GAS CONCENTRATION OUTLET*, %						
												IN		OUT												
	AVG.	RANGE	IN. H_2O	FLUE GAS	AIR	STEAM	H_2S	H_2	N_2	IN	OUT	#ACID/#C	#S/#C	#ACID/#C	#S/#C	SO_2	H_2S	H_2	N_2	SO_2	H_2S	H_2	H_2O	CO	CO_2	N_2
SO_2 SORBER:	---	---	21	15,100	---	---	---	--	--	3.4	8.1	0	0.035	0.216	0.035	0.162	--	--	--	0.0115	--	--	--	--	--	--
BOTTOM STAGE	290	275 - 300	--	--	---	---	---	--	--	---	---	---	---	---	---	--	--	--	--	--	--	--	--	--	--	--
TOP STAGES	175	155 - 185	--	--	---	---	---	--	--	---	---	---	---	---	---	--	--	--	--	--	--	--	--	--	--	--
CARBON PRECOND.	310	300 - 315	6	--	410	780	---	--	--	8.1	8.1	0.216	0.035	0.216	0.035	--	--	--	--	--	--	--	--	--	--	--
S GENERATOR	270	230 - 295	9	--	---	---	75	--	176	8.1	23.0	0.216	0.035	0.007	0.297	--	30.5	--	69.3	0.7	2.0	--	36.5 **	0.07	0.02	60.9
H_2S GEN./S STRP.	1185	845 - 1490	21	--	---	---	--	82	187	23.0	3.4	0.007	0.297	0	0.035	--	--	29.8	72.0	0.28	23.4	1.3	4.5 **	0	0.35	70.6

*As determined by a gas chromatograph.

**By difference.

During the run the carbon was circulated through the equipment as mentioned at a carbon rate of 28.9 lbs. C/hr. The estimated carbon inventory was roughly 430 lbs. C so a carbon cycle is taken as the time required for the complete carbon inventory to be turned over. The time for a cycle is about 14 hours. Steady state is taken as the time required to get carbon from theinlet of the SO_2 sorber to the H_2S generator/sulfur stripper, about 10 hours. It is then assumed steady state is from this time on. The stability of the run is measured by the responses of all carbon and gas analyses for the run, but the gas analyses of SO_2, H_2S, and H_2 are the major indicators of stability during the run.

Main Results

Gas and Carbon Analyses

The gas and carbon into and out the process units were analyzed routinely for assessment of the process stability, efficiency, and for material balances. The gas and carbon analyses from the units were effectively constant for the duration of the integral run. Therefore, the average results of the analyses given in Table B-2-2 are indicative of the results obtained. Typically the regenerated carbon from the H_2S generator/sulfur stripper to the SO_2 sorber contained about 0.035 lb. S/lb. C. The carbon from the sorber averaged an acid loading of about 0.216 lb. acid/lb. C. The carbon from the sulfur generator averaged a sulfur loading of about 0.30 lb. S/lb. C and an acid loading of about 0.007 lb. acid/lb. C. This means the sulfuric acid conversion to sulfur was about 93%. The gas analysis from the SO_2 sorber indicated an inlet SO_2 concentration of about 1600 ppm and an outlet of about 115 ppm for an average SO_2 removal efficiency of 93%. The gas analysis from the sulfur generator gave an inlet H_2S concentration of about 30 volume % and an outlet concentration of about 2% for a H_2S utilization of about 93%. The outlet SO_2 concentration ran about 0.7 volume % for a premature evolution of H_2SO_4 of about 8% of the sorbed acid. The gas analysis from the H_2S generator/sulfur stripper was an inlet concentration of about 30 volume % and an outlet concentration of 1.3% for an overall H_2 utilization of about 96%. The outlet H_2S concentration was about 23 volume % for a H_2 conversion to H_2S of about 82% and sulfur conversion to H_2S of about 68% (want 75%).

Material Balances

The gas and carbon analyses were used to obtain material balances for sulfur , hydrogen, and carbon. These balances are given in Table B-2-3 on an individual unit basis and an overall pilot plant basis. The stream identifications are given on Dwg. 2529 in Appendix B-3 for the integral pilot plant. The

TABLE B-2-3. MATERIAL BALANCE SHEET FOR INTEGRAL OPERATION OF SO_2 PILOT PLANT

Stream Number	Stream Identity	Sulfur Balance, lbs. S/hr.		Hydrogen Balance, lb. H_2/hr.		Carbon Balance lb./hr.	
		In	Out	In	Out	In	Out
G-11 & -12	SO_2 Sorber - Gas In	2.03	--	--	--		
C-11	- Carbon In	1.02	--	--	--		
G-13	- Gas Out	--	0.14	--	--		
C-12	- Carbon Out	--	3.06	--	--		
D-11	- Cyclone	--	0.02	--	--		
D-12	- Dust Collector	--	0.03	--	--		
C-13	- C Weepage	--	0.00	--	--		
	TOTAL	3.05	3.25	--	--		
G-301 & -302	C Precond. - Gas In	0	--	--	--		
C-12	- Carbon In	3.06	--	--	--		
G-303	- Gas Out	--	0	--	--		
C-201	- Carbon Out	--	3.06	--	--		
D-301	- Cyclone	--	0	--	--		
D-302	- C Filter	--	--	--	--		
	TOTAL	3.06	3.06	--	--		
G-204	S Generator - Gas In	6.22	--	--	--		
C-201	- Carbon In	3.06	--	--	--		
G-205	- Gas Out H_2S	--	0.48	--	--		
G-205	- Gas Out SO_2	--	0.17	--	--		
C-202	- Carbon Out	--	8.59	--	--		
D-201	- C Filter	--	--	--	--		
	TOTAL	9.28	9.24	--	--		
G-103	H_2S Gen./S Str. - Gas In	0	--	0.40	--		
C-101	- Carbon In	1.29	--	0	--		
C-102	- Carbon In	7.30	--	0	--		
G-104	- Gas Out H_2S	--	5.05	--	0.32		
G-104	- Gas Out S	--	2.52	--	0		
G-104	- Gas Out H_2	--	--	--	0.02		
C-103	- Carbon Out	--	1.02	--	0		
D-101	- Cyclone	--	0.01	--	0		
	TOTAL	8.59	8.60	0.40	0.34		
Overall Balance		8.25	8.42	0.40	0.34	540	483

sulfur balances across the SO_2 sorber, sulfur generator, and the H_2S generator/sulfur stripper gave an in/out ratio of 3.05/3.25, 9.28/9.24, and 8.59/8.60, respectively. The overall sulfur balance was 8.25 lbs. S/hr. into the system and 8.42 lbs. S/hr. out of the system. These material balances give good reliability in the results of the run.

The hydrogen balance indicated 0.4 lb. H_2/hr. into the H_2S generator/sulfur stripper and 0.34 out as H_2S and H_2. The unaccounted for H_2 amounts to about 15% of that fed to the unit. This is similar to the results of past runs on a one carbon cycle basis.

A more extended run that the two cycles of the present run is needed to assess the effect of cycling on the additional H_2 usage. The last H_2 and H_2S analysis at the outlet was made near the start of the second carbon cycle, so that the hydrogen material balance is basically an indication of the results of the first carbon cycle.

Prior to and during the run a total 540 pounds of carbon were introduced into the system and 650 pounds of material were recovered. The pounds C depends on the values taken for the amount of sorbed sulfur, moisture, and acid content. In the reactors containing the most carbon, also having the most effect on the balance (SO_2 sorber and sulfur generator), these constituents vary from the reactor inlet to outlet, so for the present material balances an average value across the column was taken. Using this method the carbon balance indicated 540 pounds in and 438 pounds out, a difference of 10%. After the next cyclic run all of the carbon will be regenerated so a more accurate balance can be obtained.

APPENDIX B-3

BLUEPRINTS

Dwg. No.	Title	Page
INTEGRAL		
2507	Mechanical Integration - 20,000 CFH SO_2 Pilot Plant - Process Flowsheet	708
2511	Mechanical Integration - 20,000 CFH SO_2 Pilot Plant - Equipment Modifications and Relocation	709
2528A	Instrumentation for Integrated SO2 Recovery Process	710
2529	Material and Flow Streams and Sample Ports	711
SO_2 ADSORBER		
S-M-11709	Fabrication Details - 18" SO_2 Adsorber	712
2401	18" Diameter High-Capacity Fluid Bed SO_2 Adsorber at No. 6 Boiler	713
6"Ø PRE-CONDITIONER		
2488	Carbon Pre-heater - 8"Ø Moving Bed Sulfur Generator	714
8"Ø ACID CONVERTER		
2484	Fabrication Details - Moving Bed Reactor	715
2485	Process Flowsheet (Preliminary Drawing)	716
4"Ø UNIT		
2376	4" Diameter Stainless Steel Fluid Bed Reactor (Fabrication)	717
2399	4" Diameter Fluidized Bed Regenerator Located at No. 6 Power Boiler	718

Dwg. No.	Title	Page
2385	Distributor Plate Template - 4" Diameter Stainless Steel Reactor	719
2487	Gas Heater for 8"Ø Moving Bed Sulfur Generator and 4"Ø H_2S Generator/Sulfur Stripper	720
SULFUR CONDENSER		
2537	Sulfur Condensing System for SO_2 Recovery Pilot Plant	721
2532	Assembly Drawing - Sulfur Condensing System	722
GAS CHROMATOGRAPH		
30460-B	Schematic of Analyzer	723
30460-Z	Schematic Flow for Gas Sampling	724
30461-F	Gas Sample Handling System Schematic	725

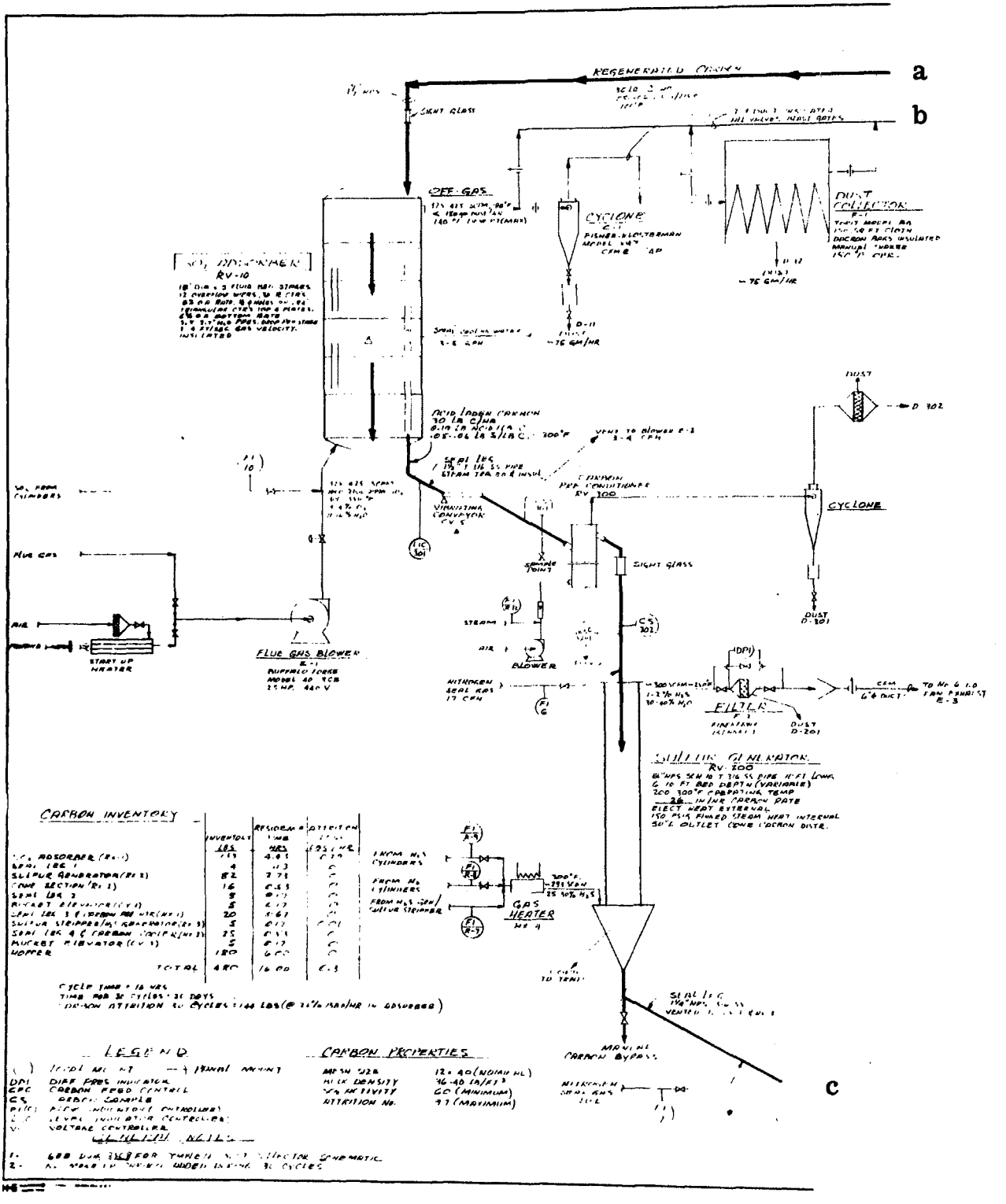
a
b
c
REGENERATED CARBON
SIGHT GLASS
OFF-GAS
CYCLONE
DUST COLLECTOR
RV-10
CARBON PRE-CONDITIONER
RV-100
VIBRATING CONVEYOR
CYCLONE
DUST
D-302
D-301
FLUE GAS BLOWER
BLOWER
START UP HEATER
FILTER
SULFUR GENERATOR
RV-200
GAS HEATER
CARBON INVENTORY
LEGEND
CARBON PROPERTIES
MAJOR CARBON BYPASS

Mechanical Integration - 20,000 CFH
SO_2 Pilot Plant - Process Flowsheet

Dwg. 2507

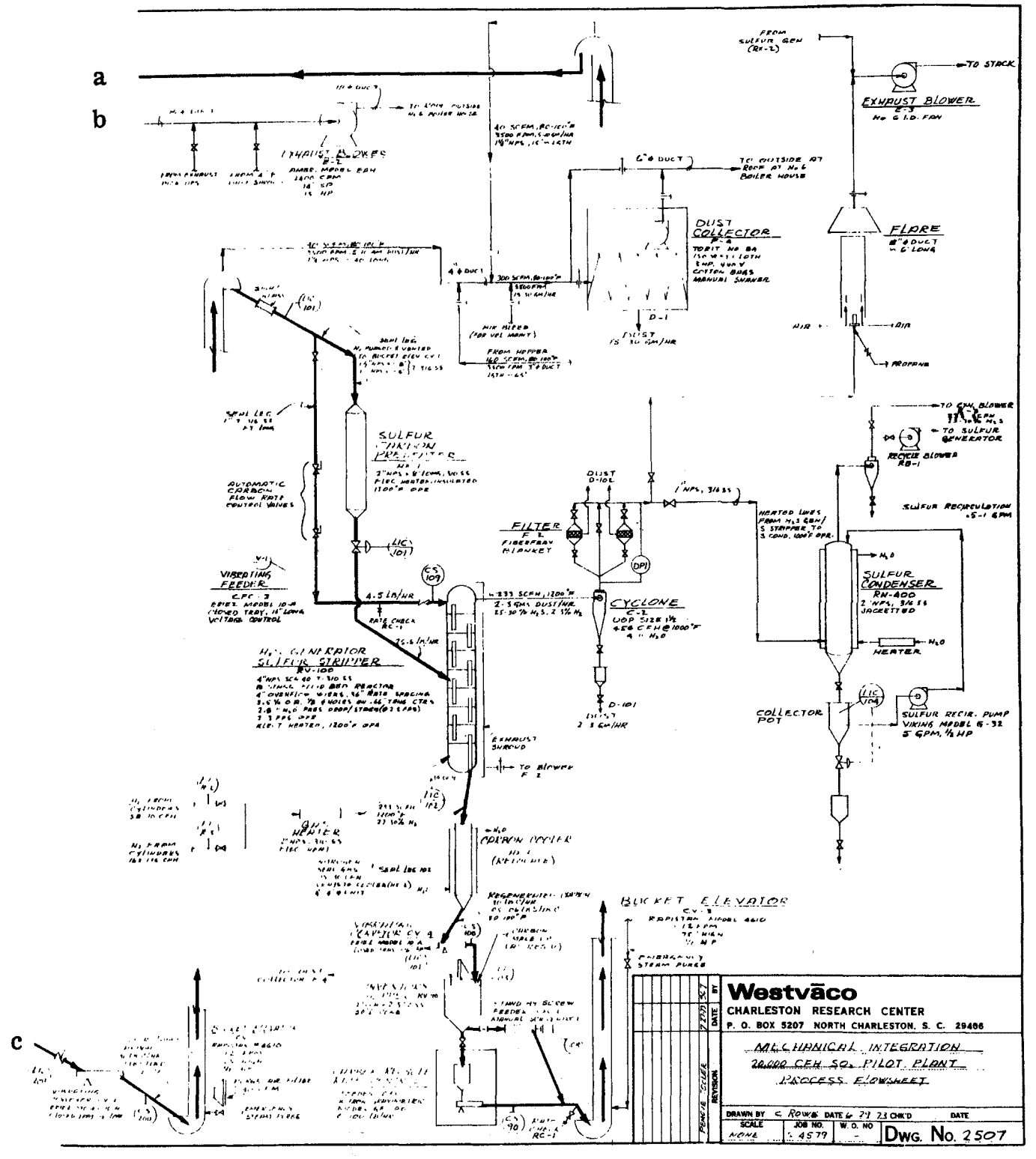

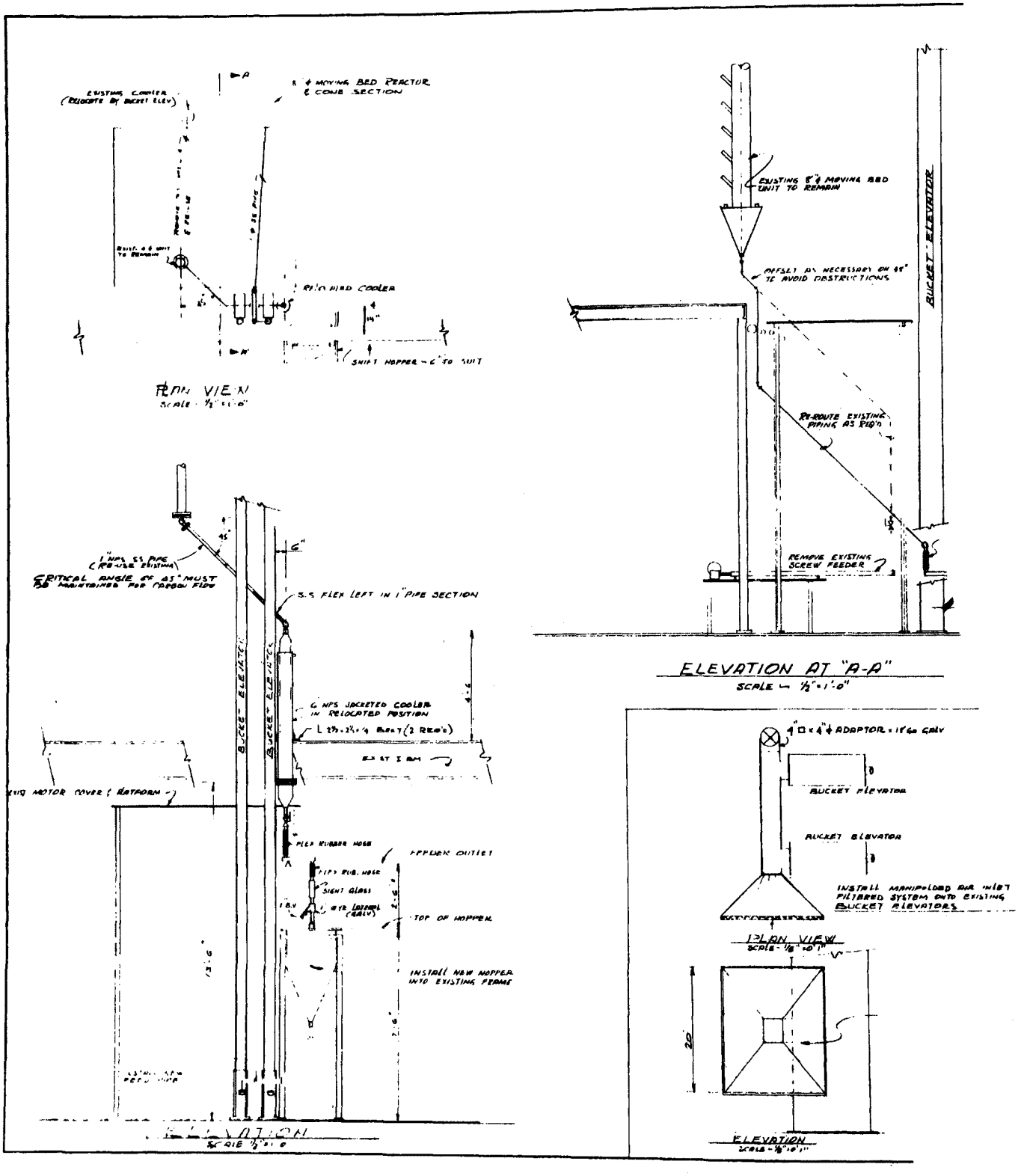
EXISTING COOLER (RELOCATE BY BUCKET ELEV)
MOVING BED REACTOR & CONE SECTION
RE'D BED COOLER
SHIFT HOPPER ~ 6" TO SUIT
PLAN VIEW
SCALE - 1/2" = 1'-0"
EXISTING 8" ϕ MOVING BED UNIT TO REMAIN
OFFSET AS NECESSARY ON 45° TO AVOID OBSTRUCTIONS
BUCKET ELEVATOR
RE-ROUTE EXISTING PIPING AS REQ'D
REMOVE EXISTING SCREW FEEDER
ELEVATION AT "A-A"
SCALE ~ 1/2" = 1'-0"
1" NPS SS PIPE (RE-USE EXISTING)
CRITICAL ANGLE OF 45° MUST BE MAINTAINED FOR RATHOLE FLOW
S.S. FLEX LEFT IN 1" PIPE SECTION
BUCKET ELEVATOR
6 NPS JACKETED COOLER IN RELOCATED POSITION
L 2½ x 2½ x ¼ BRACKET (2 REQ'D)
MOTOR COVER (RATHOLE)
FLEX RUBBER HOSE
FEEDER OUTLET
SIGHT GLASS
TOP OF HOPPER
INSTALL NEW HOPPER INTO EXISTING FRAME
ELEVATION
SCALE 1/2" = 1'-0"
4" □ x 4" ϕ ADAPTOR x 18 Ga GALV
BUCKET ELEVATOR
BUCKET ELEVATOR
INSTALL MANIFOLDED DUST INLET FILTERED SYSTEM ONTO EXISTING BUCKET ELEVATORS
PLAN VIEW
SCALE - 1/8" = 1'-0"
20"
ELEVATION
SCALE - 1/8" = 1'-0"

Mechanical Integration - 20,000 CFH
SO_2 Pilot Plant - Equipment
Modifications and Relocation

Dwg. 2511

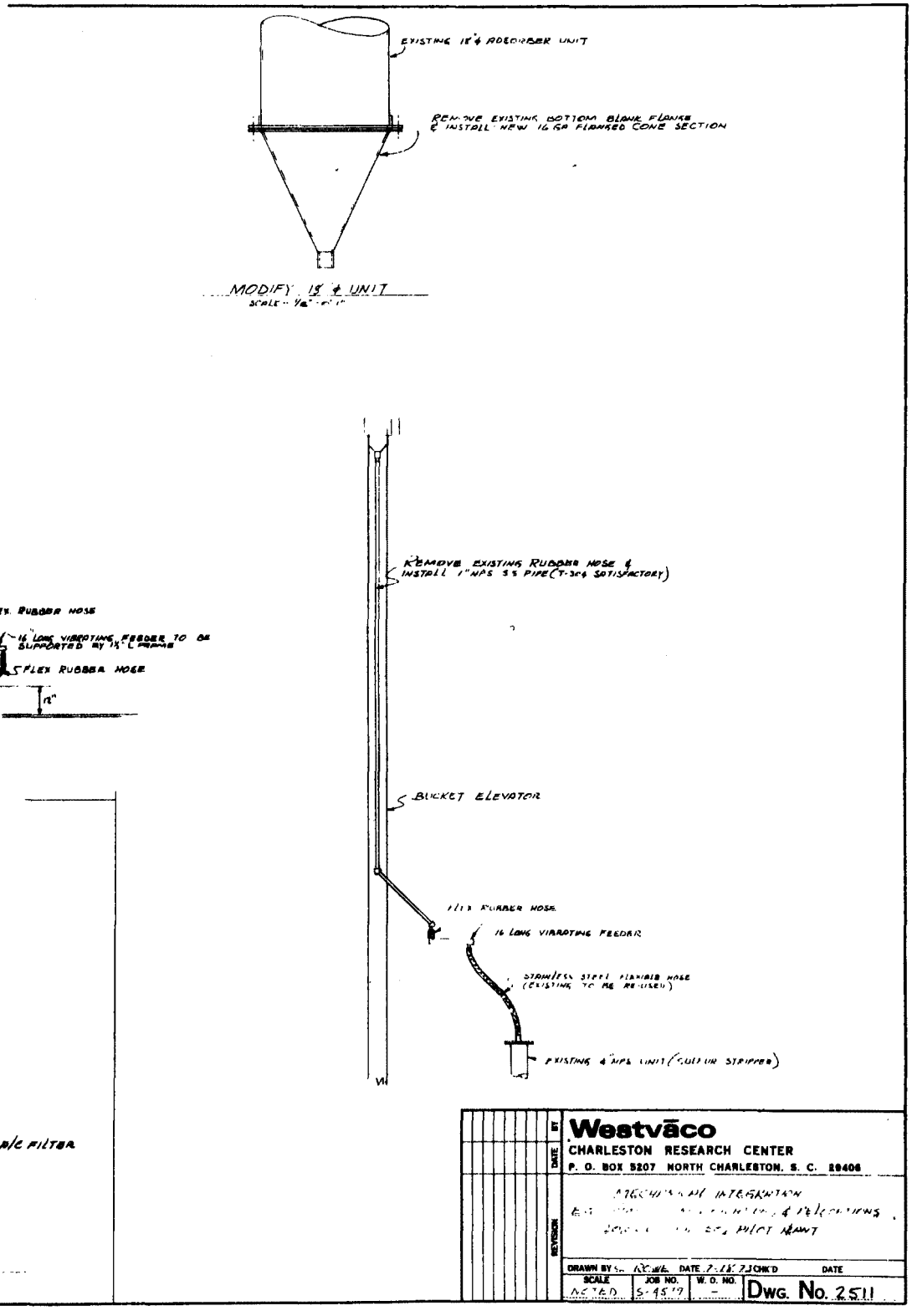

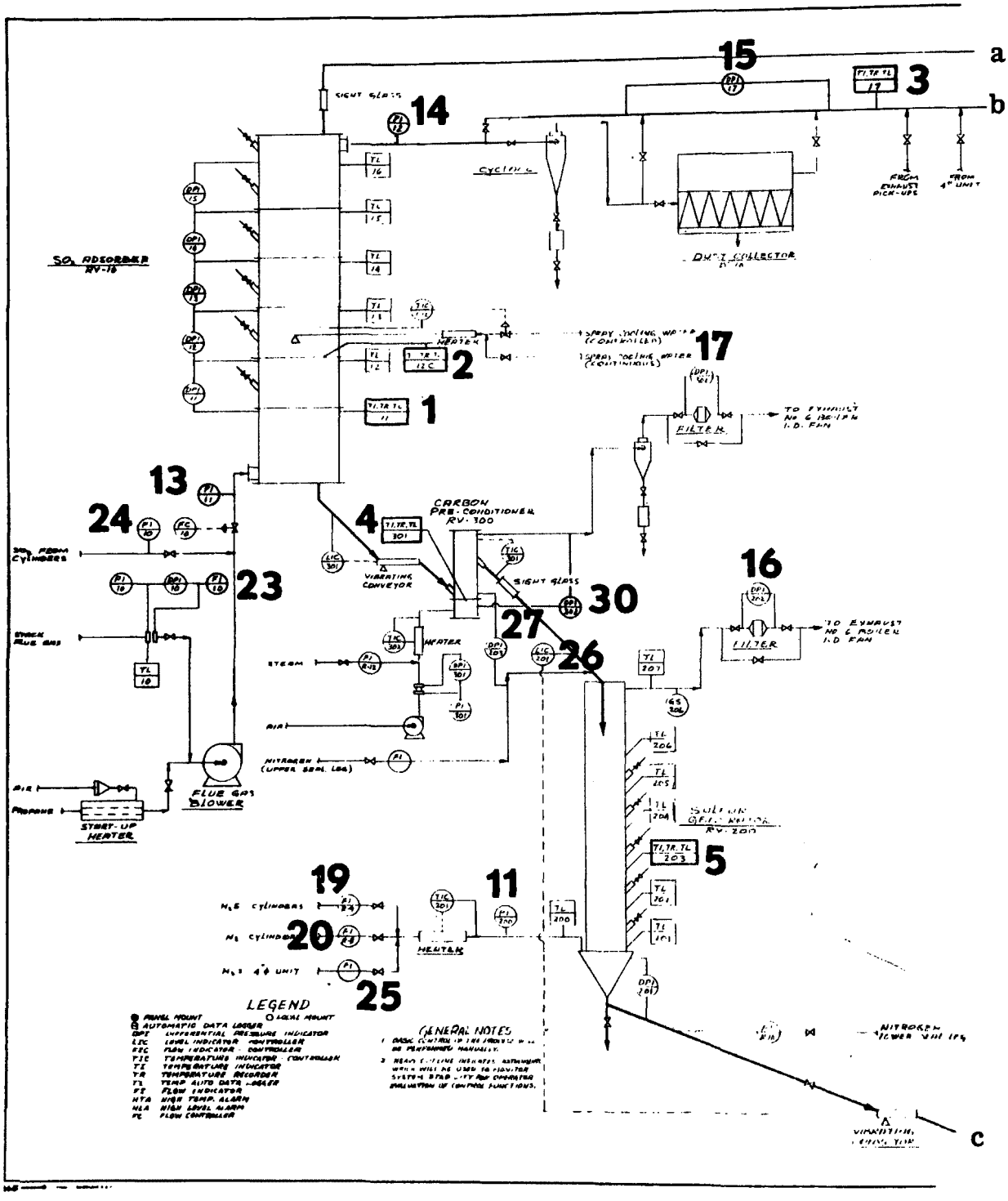
a
b
c
15
3
14
2
17
1
13
24
4
23
16
30
27
26
5
19
20
11
25
SO2 ADSORBER RV-10
CYCLONE
DUST COLLECTOR
FILTER
CARBON PRE-CONDITIONER RV-100
VIBRATING CONVEYOR
SIGHT GLASS
HEATER
STEAM
AIR
NITROGEN (UPPER SEAL LEG)
FLUE GAS BLOWER
START-UP HEATER
PROPANE
STACK FLUE GAS
SULFUR GENERATOR RV-200
H2S CYLINDERS
H2 CYLINDERS
H2S 4" UNIT
LEGEND
PANEL MOUNT
LOCAL MOUNT
AUTOMATIC DATA LOGGER
DPI DIFFERENTIAL PRESSURE INDICATOR
LIC LEVEL INDICATOR CONTROLLER
FIC FLOW INDICATOR CONTROLLER
TIC TEMPERATURE INDICATOR CONTROLLER
TI TEMPERATURE INDICATOR
TR TEMPERATURE RECORDER
TI TEMP AUTO DATA LOGGER
FI FLOW INDICATOR
HTA HIGH TEMP. ALARM
HLA HIGH LEVEL ALARM
FC FLOW CONTROLLER
GENERAL NOTES

Instrumentation for Integrated SO_2 Recovery Process

Dwg. 2528A

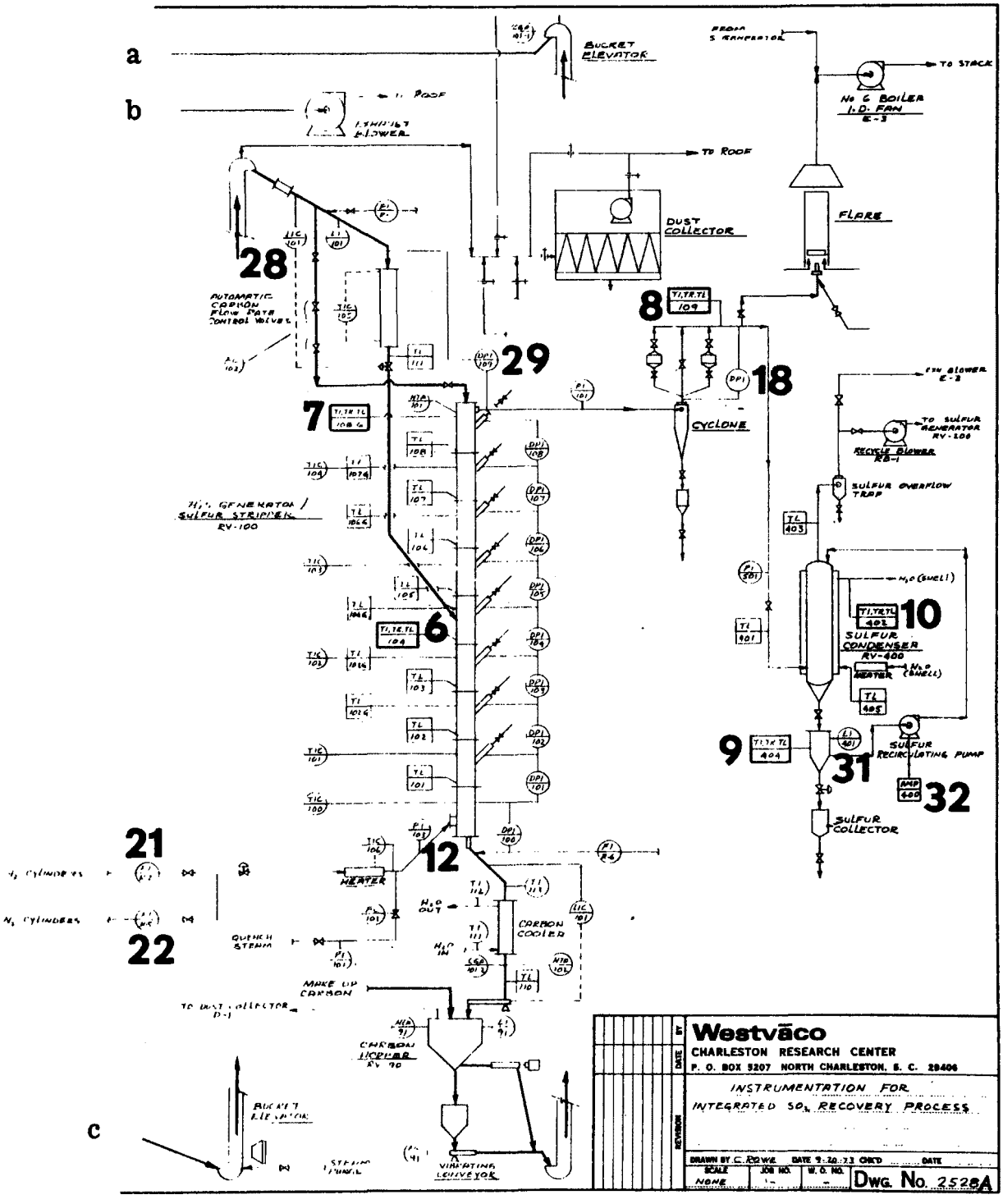

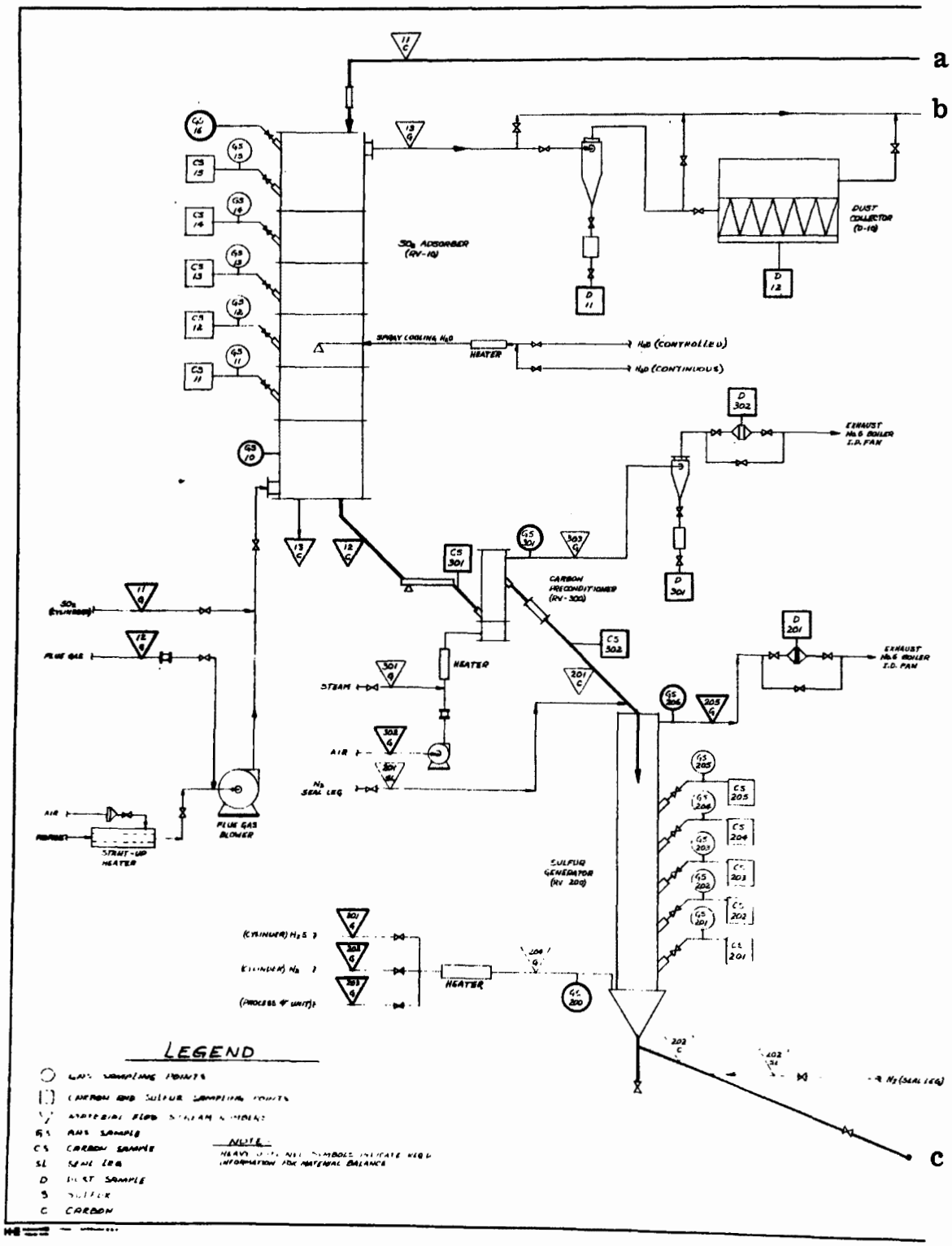
a
b
c
SO2 ADSORBER (RV-10)
DUST COLLECTOR (D-10)
SPRAY COOLING H2O
HEATER
H2O (CONTROLLED)
H2O (CONTINUOUS)
EXHAUST No.6 BOILER I.D. FAN
CARBON PRECONDITIONER (RV-300)
SO2 (CYLINDER)
FLUE GAS
STEAM
AIR
N2 SEAL LEG
FLUE GAS BLOWER
START-UP HEATER
SULFUR GENERATOR (RV 200)
(CYLINDER) H2S
(CYLINDER) N2
(PROCESS OF UNIT)
LEGEND
GAS SAMPLE
CARBON SAMPLE
SEAL LEG
DUST SAMPLE
SULFUR
CARBON
NOTE

Material and Flow Streams and Sample Ports

Dwg. 2529

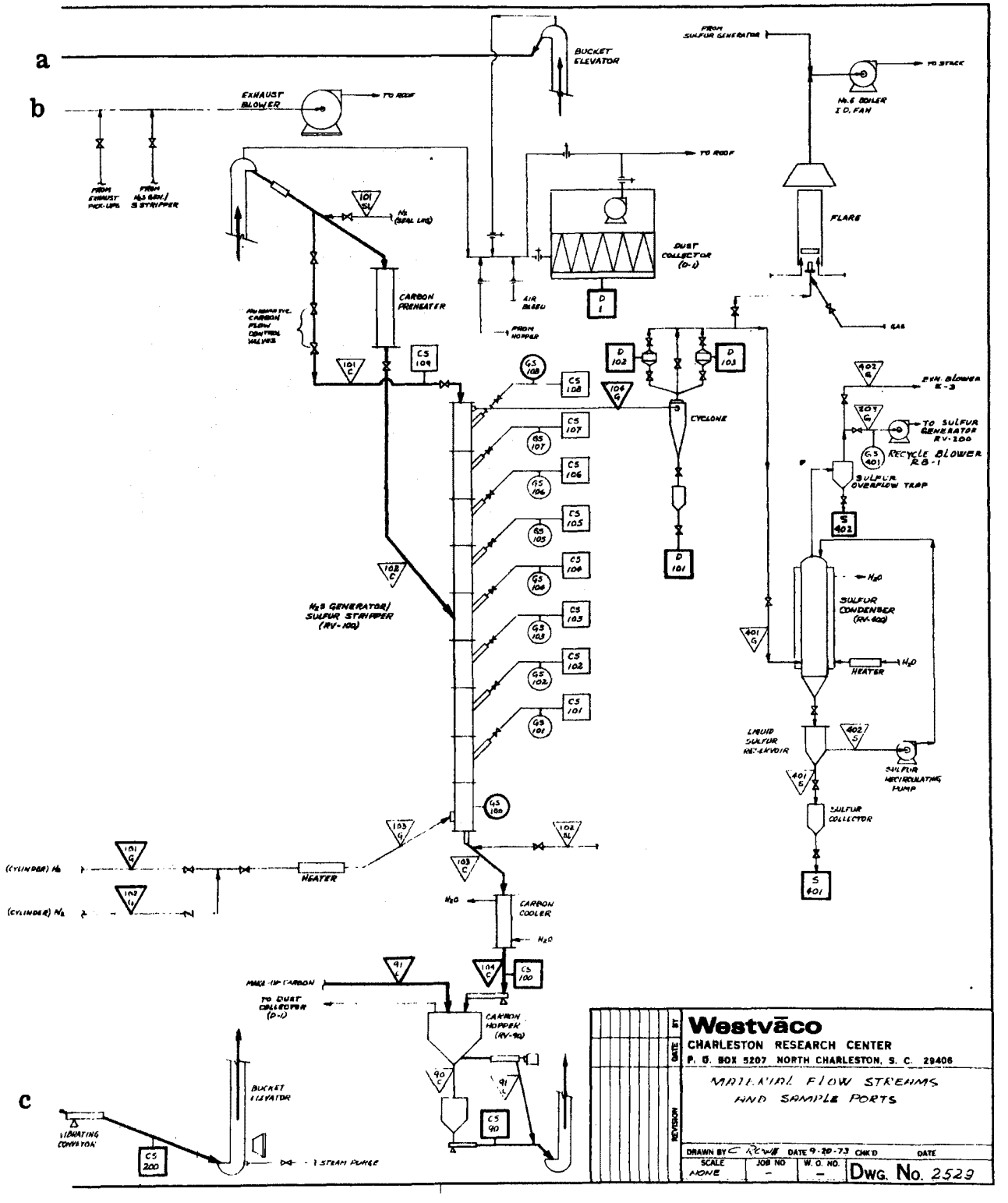

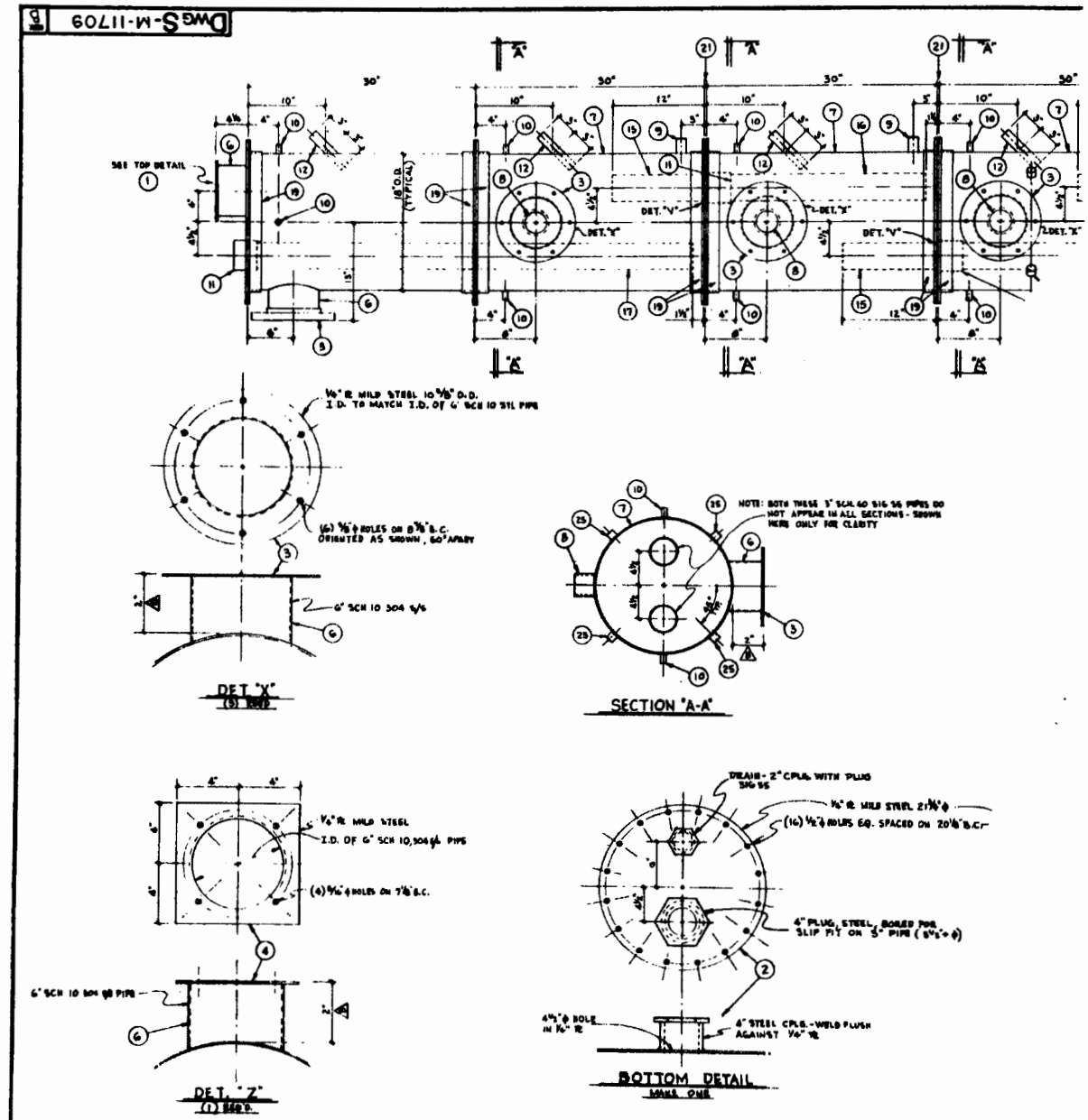

GENERAL NOTES

1. ALL MATERIALS FURN. BY WESTVACO WITH THE EXCEPTION OF ITEM # 28.
2. ALL WELDING TO BE IN ACCORD. WITH LATEST SPECS OF AWS.
3. EACH SECTION SHALL BE FREE OF WELDING SLAG & GROUND SMOOTH ON INSIDE AT WELD.
4. ENTIRE ASSEMBLY, BOTH INSIDE & OUT, SHALL BE THOROUGHLY CLEANED & DE-GREASED & RENDERED FREE OF ANY & ALL FOREIGN MATERIAL.
5. NO PAINTING REQUIRED & ALL FABRICATION SHALL BE DONE IN A NEAT & WORKMANLIKE MANNER.
6. ENTIRE COLUMN TO BE PRE-ASSEMBLED BY FABRICATOR AND CHECKED TO BE STRAIGHT & TRUE WITH A MAX. MISALIGNMENT OF 1/16" OVER ENTIRE LENGTH. MAY BE DIS-ASSEMBLED FOR TRANSPORTATION TO JOB SITE.

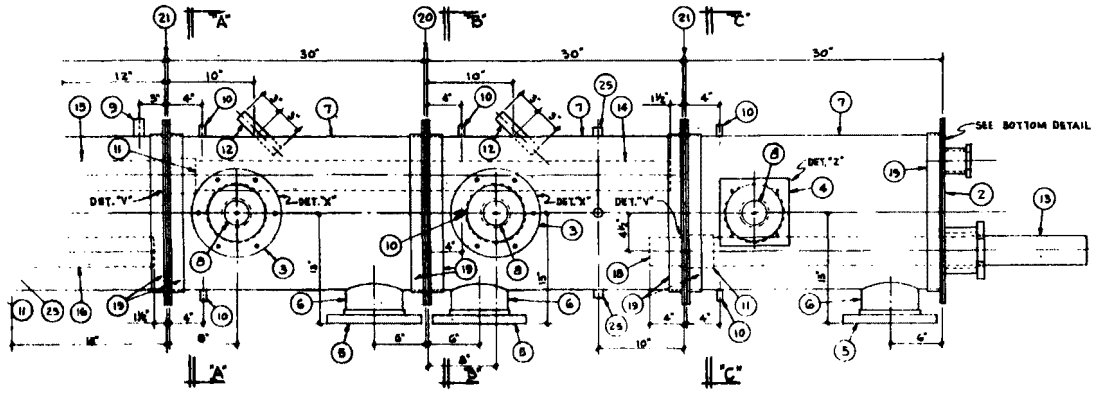

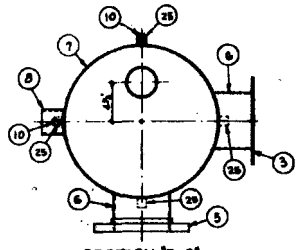

SECTION "B-B"

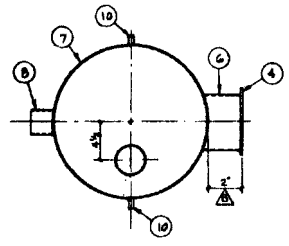

SECTION "C-C"

BILL OF MATERIAL				
MK#	#REQ'D.	MATERIAL	DESCRIPTION	REMARKS
1	1	AS SHOWN	ABSORBER TOP	SHIP COMPLETE AS SHOWN
2	1	"	" BOTTOM	" " "
3	3	STEEL	DET "X"	
4	1	STEEL	DET "Z"	
5	4	"	6" 150# SLIP ON FLG	
6	9 FT	304 SS	6" SCH. 10 PIPE	TOTAL ANT. REQ'D
7	18 FT	304 SS	18" SCH. 5 PIPE	" " " "
8	6	SIG SS	2" PIPE COUPLING	
9	3	"	1" " "	
10	14	"	1/2" " "	
11	3	"	3/4" " "	
12	6	"	1" x 6" LG. STD. NIPPLE	
13	1	"	3" x 45" LG. SCH. 40 PIPE	THREAD BOTH ENDS
14	1	"	" 36 5/8 " " "	" ONE "
15	3	"	" 13 1/4 " " "	" " "
16	2	"	" 26 1/2 " " "	" " "
17	1	"	" 57 5/8 " " "	" " "
18	1	"	" 57 5/8 " " "	" " "
19	16	STEEL	1 3/8 x 1 3/4 x 3/16 L. RING 18 1/4" I.D.	(16) 1/2" ϕ HOLES ON 20 5/8" B.C.
20	1	STEEL	BLANK 3/4" PLATE	
21	4	SS	PERFORATED TRAY	SEE DWG# 2990
22	4	ALUM.	5" CONDUIT LOCKING NUT	
23	128	STL	3/8 x 1 1/2" FLG BOLTS W/NUTS, WASHERS	FURN. BY FABRICATOR
24	13	SILICONE RUBBER	21 3/4" O.D. GASKETS	
25	8	SIG SS	5/8" PIPE COUPLING	
26	5	—	MACHINE MATICS SEE 60 ACROSS THIN PORT	MOUNT ON MK# 3
27	2	—	WYSMONT MODEL H CLEAN SIGHT WINDOW	MOUNT ON MK# 4 & TOP

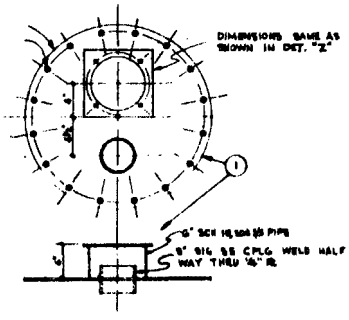

TOP DETAIL
MAKE ONE

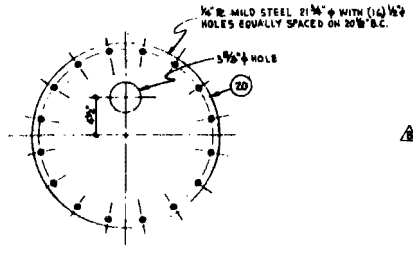

DET "W"
(1) REQ'D.

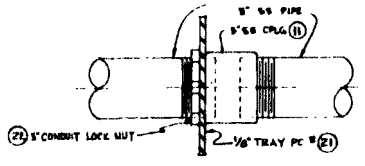

DET. "V"
CONNECTION OF 5" DOWNCOMERS TO PERFORATED TRAY

JOB NO.	W.O. NO.	P.B.	ISSUE	DATE	DRAWN	CHK'D BY	APPD BY	REVISIONS
			G.W.L.	5.5.71	T.F.			REVISED
			G.W.L.	4.12.71	T.F.			CHANGED & FOR FAB.
			G.W.L.	ORIG. 4.6.71	T.F.			FOR BIDS

Westvaco
Kraft Division
P.O. Box 8207 North Charleston, S.C. 29406

FABRICATION DETAILS
18" SO_2 ADSORBER

DRAWN BY TONY FOSTER DATE 4.6.71 CHK'D BY ____ DATE ____
SCALE 1/2" = 1'-0" UNIT No. 33 DWG S-M-11709 REV B

GENERAL NOTES

BUCKET ELEVATOR SHIPPED DISASSEMBLED

2 ORIENT ALL SIGHT WINDOWS FOR CONVENIENT ACCESS FROM PLATFORMS OR STAIRS

3 ALL COUPLINGS ON ADSORBER & FLUE GAS COOLER NOT OTHERWISE USED SHALL BE PLUGGED

4 FLANGE GASKETS SHALL BE E.P.D.M. MATERIAL, SIZE 150 AS MFG BY CAROLINA GASKET & RUBBER CO (350°F MAX SERVICE)

5 ALL BUTTERFLY VALVES ARE FIG No 100 AS MFG BY KEYSTONE UNLESS OTHERWISE INDICATED

6 ALL BALL VALVES TO BE BALSBURY SERIES, BRASS BODY FIG No 350 AS MFG BY JAMESBURY CORP

7 FLUE GAS COOLER TO BE LOCATED CLOSE AS PRACTICAL TO SO2 ADSORBER. (4 SECTIONS 2" MPS - 10'-6" LONG, 6" MPS MANIFOLDS - 4'-0" LONG)

8 ALL INSULATION SHALL BE 1½" THICK FOAMGLAS AS MFG BY PITTSBURG-CORNING (OR EQUAL)

9 EXISTING INSTRUMENTS AT PANELBOARD ARE: DPI 2-5, DPR-1, TR-1, SO2/NOx ANALYZER AND OXYGEN ANALYZER.

LEGEND

○ LOCAL MOUNT INSTRUMENT

⊖ PANEL MOUNT INSTRUMENT

DPI DIFFERENTIAL PRESSURE INDICATOR
PI PRESSURE INDICATOR
TR TEMPERATURE RECORDER
TI TEMPERATURE INDICATOR
LC LEVEL CONTROLLER
LA LEVEL ALARM

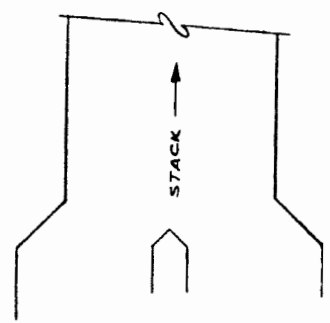

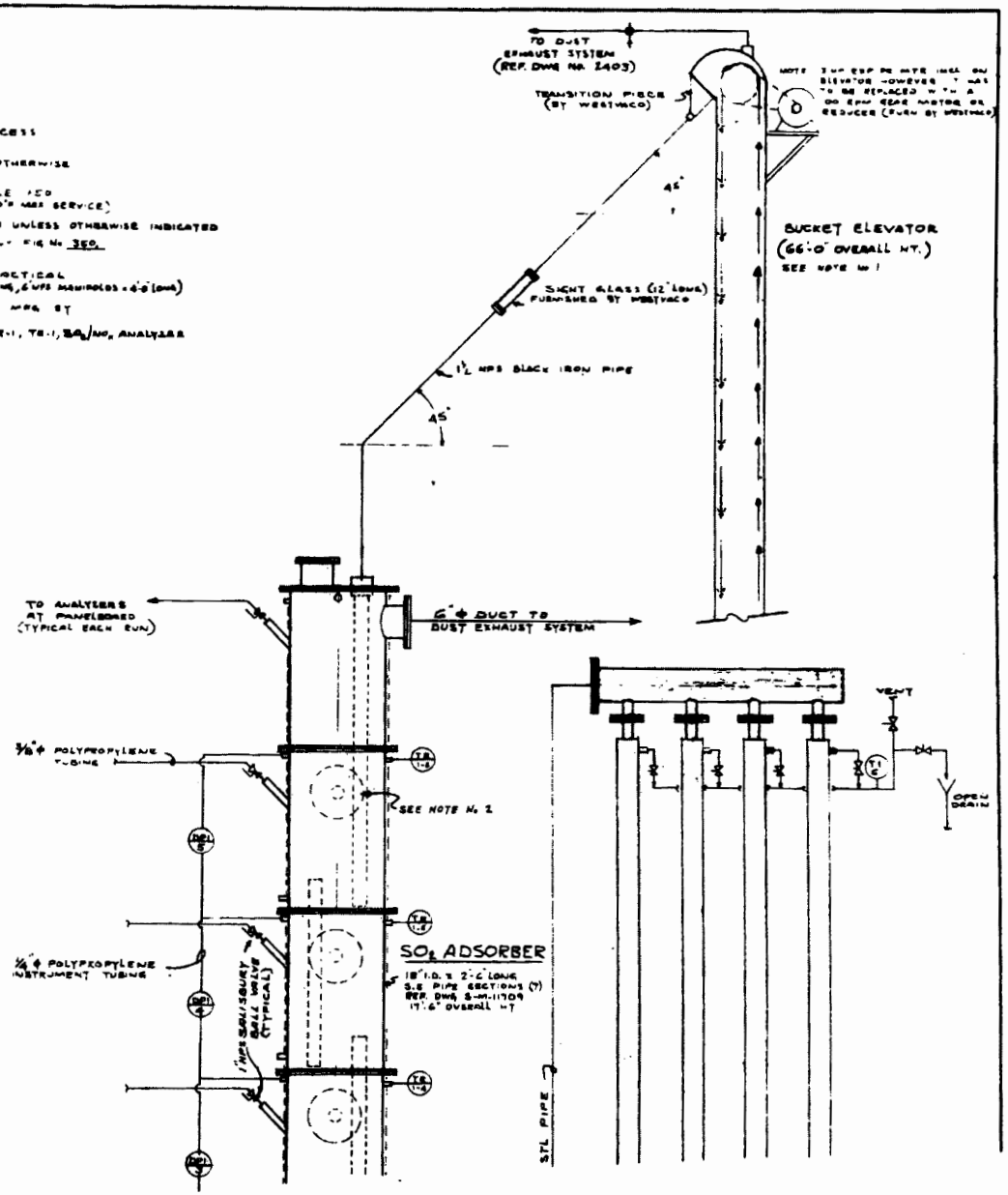

18" Diameter High-Capacity Fluid Bed SO_2 Adsorber at No. 6 Boiler

Dwg. 2401

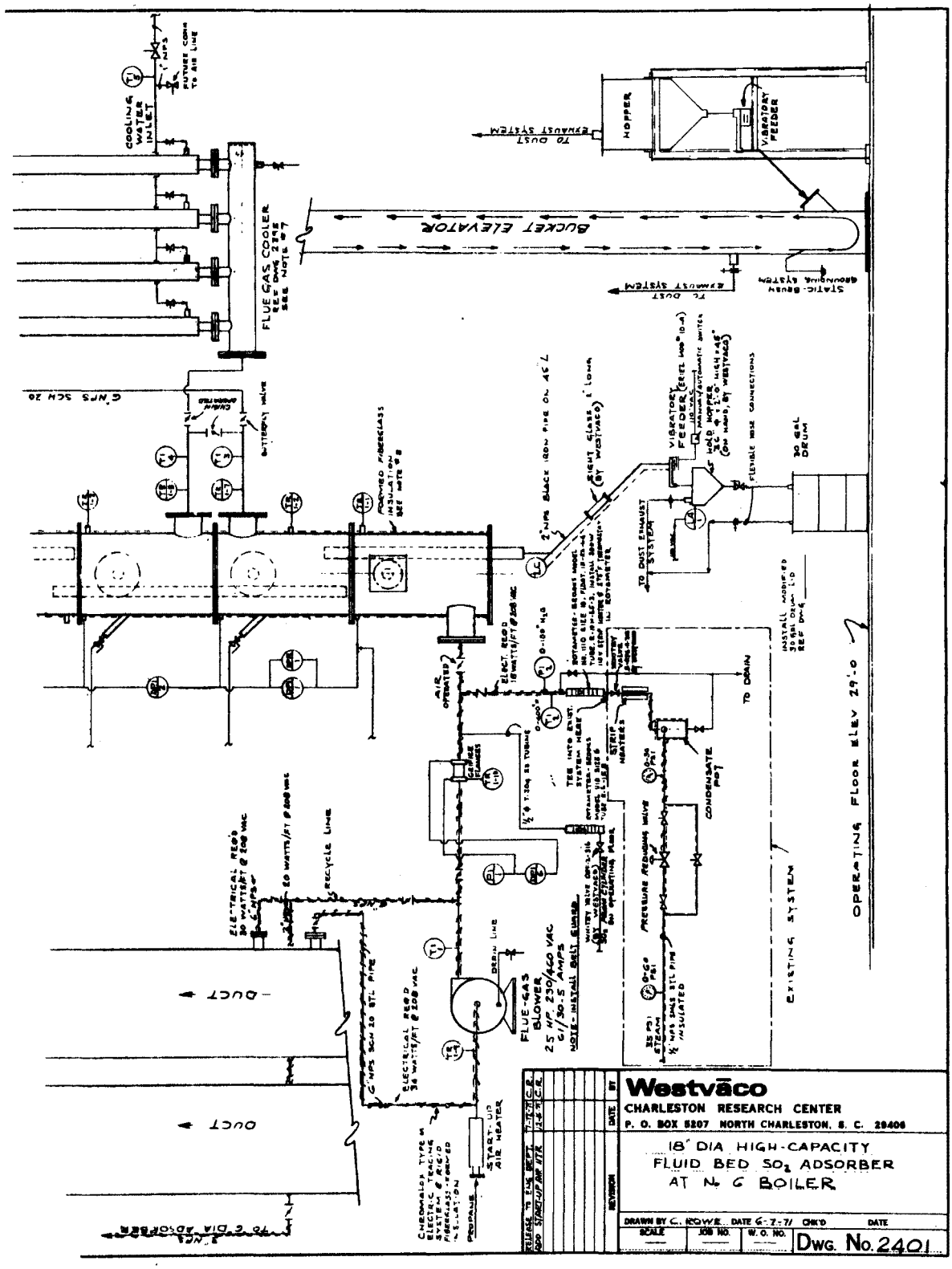

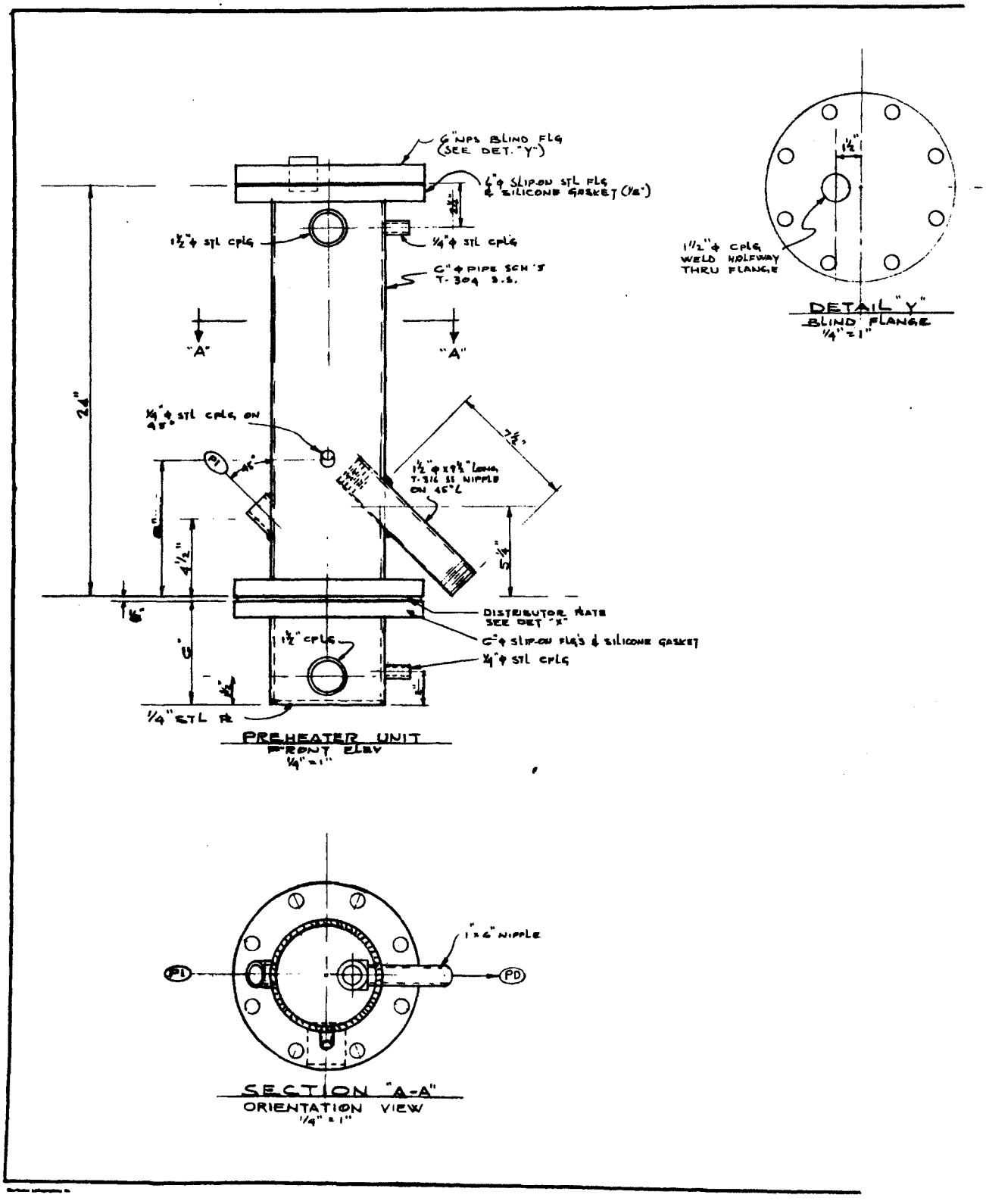
6" NPS BLIND FLG (SEE DET. "Y")
6" ϕ SLIP-ON STL FLG & SILICONE GASKET (1/2")
1 1/2" ϕ STL CPLG
1/4" ϕ STL CPLG
6" ϕ PIPE SCH 5 T-304 S.S.
"A"
"A"
24"
1/4" ϕ STL CPLG ON 45°
1 1/2" ϕ x 9 3/4" LONG T-316 SS NIPPLE ON 45° ∠
4 1/2"
DISTRIBUTOR PLATE SEE DET "X"
6" ϕ SLIP-ON FLG'S & SILICONE GASKET
1 1/2" CPLG
1/4" ϕ STL CPLG
1/4" STL PL
PREHEATER UNIT
FRONT ELEV
1/4" = 1"
1 1/2"
1 1/2" ϕ CPLG WELD HOLEWAY THRU FLANGE
DETAIL "Y"
BLIND FLANGE
1/4" = 1"
1" x 6" NIPPLE
PD
PD
SECTION "A-A"
ORIENTATION VIEW
1/4" = 1"

Carbon Pre-heater - 8"Ø Moving Bed Sulfur Generator

Dwg. 2488

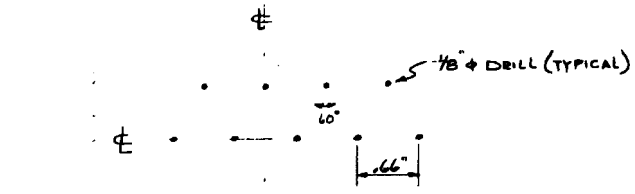

HOLE PATTERN
FULL SCALE

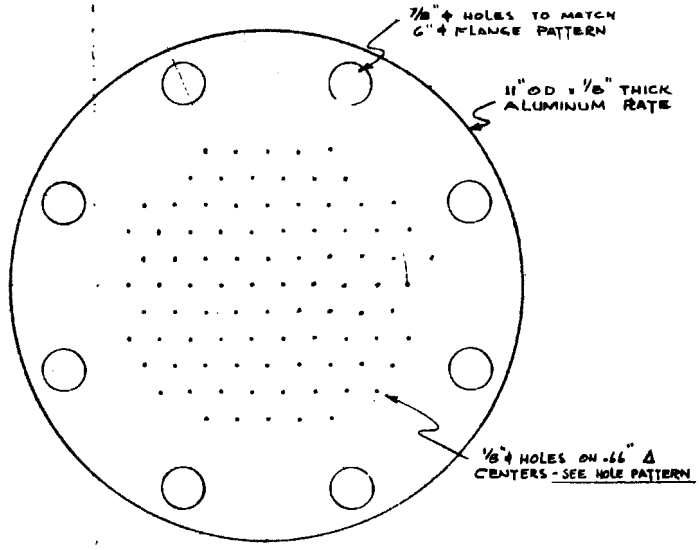

DETAIL "X"
DISTRIBUTOR PLATE
1/2" = 1"
SEE TEMPLATE DWG

NOTE

ALL PIPE, FLANGES & FITTINGS CARBON STEEL UNLESS OTHERWISE SPECIFIED

(PI) PRODUCT INLET — 1" ϕ STL PIPE CPLG

(PD) PRODUCT DISCHARGE - 1½" x 9½" S.S. NIPPLE

REVISION	DATE	BY
ADD 1" CPLG, 1½" NIPPLE	2-20-73	C.R.
FOR FABRICATION	2-16-73	C.R.
GEN MODIFICATION	2-16-73	C.R.

Westvaco
CHARLESTON RESEARCH CENTER
P. O. BOX 5207 NORTH CHARLESTON, S. C. 29406

CARBON PREHEATER
8" ϕ MOVING BED SULFUR GENERATOR

DRAWN BY C. ROWE DATE 1-24-73 CHK'D ____ DATE ____

SCALE	JOB NO.	W. O. NO.	DWG. No.
AS NOTED	-	-	2488

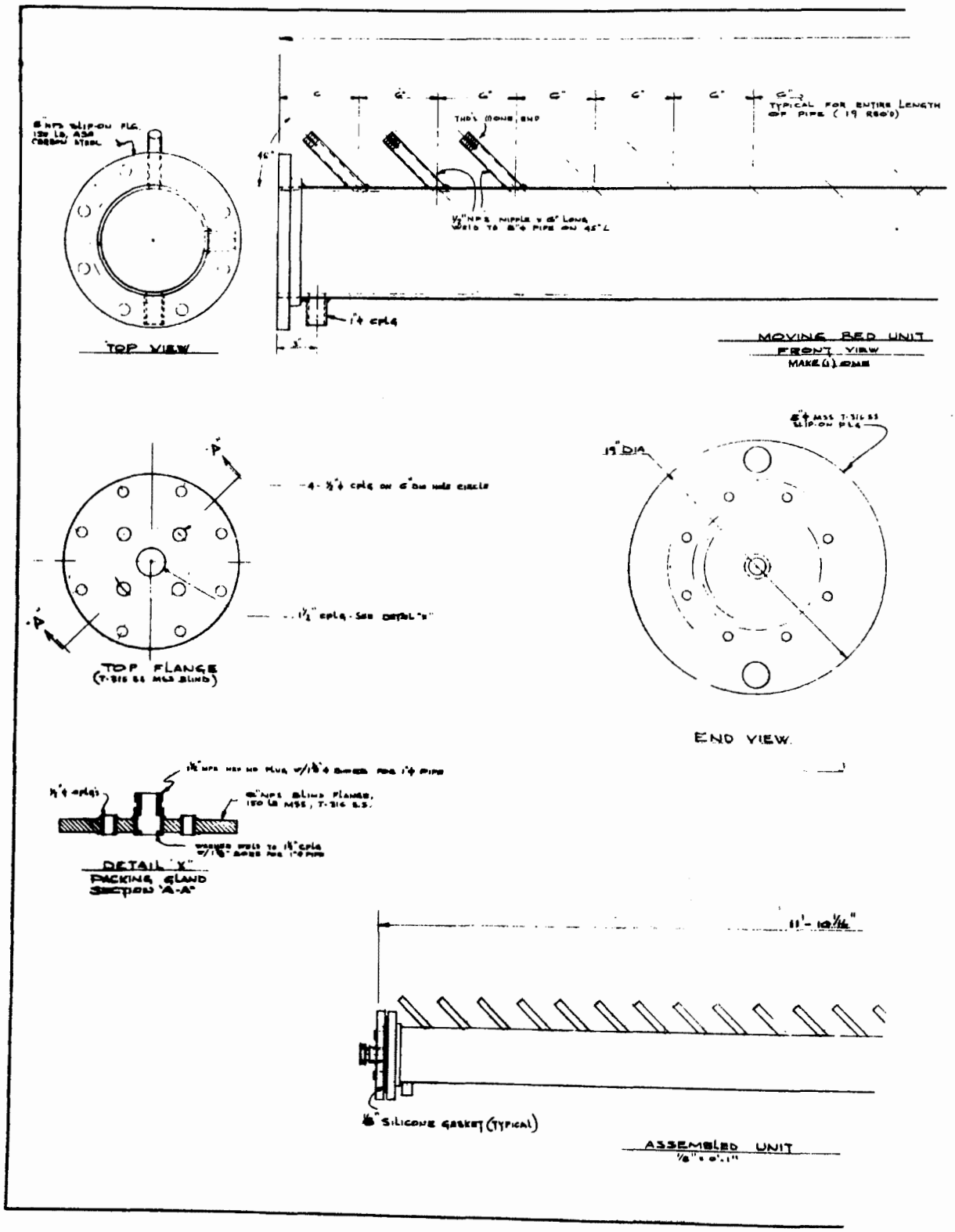
TOP VIEW
TYPICAL FOR ENTIRE LENGTH OF PIPE (19 REQ'D)
MOVING BED UNIT
FRONT VIEW
TOP FLANGE
END VIEW
DETAIL "X"
PACKING GLAND
SECTION "A-A"
11'-10 1/16"
SILICONE GASKET (TYPICAL)
ASSEMBLED UNIT

Fabrication Details - Moving Bed Reactor

Dwg. 2484

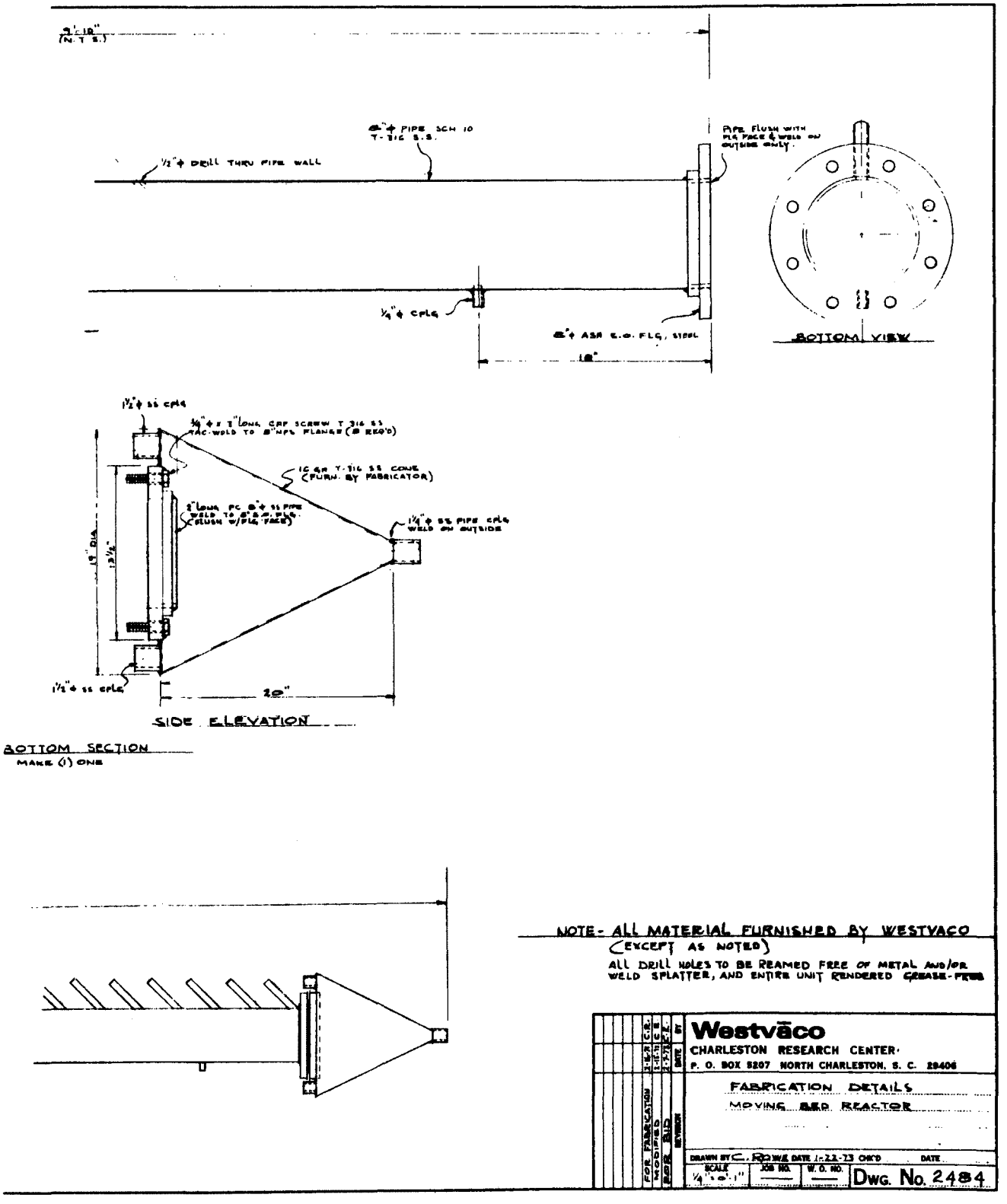

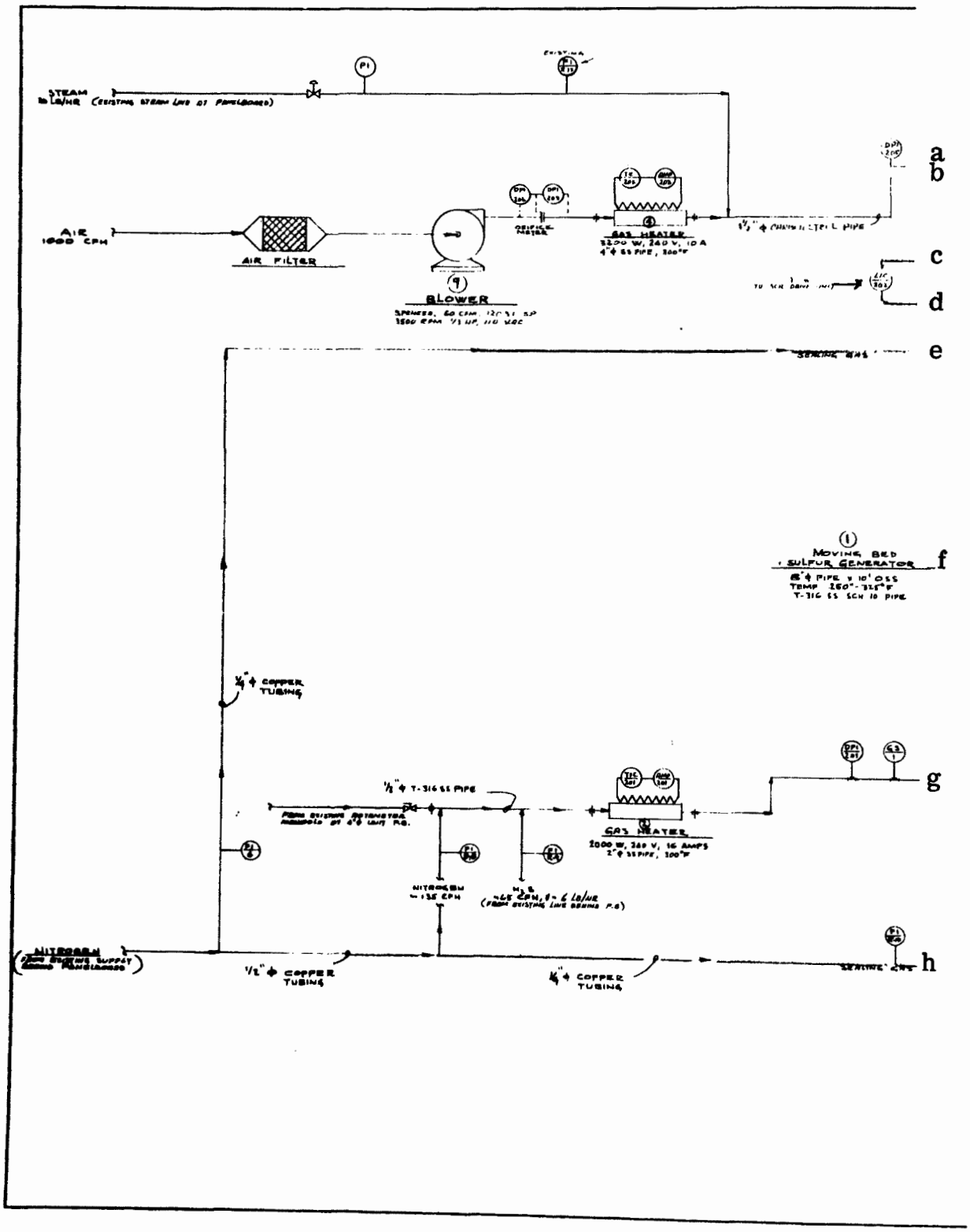
STEAM
AIR
1000 CPH
AIR FILTER
BLOWER
ORIFICE METER
GAS HEATER
3200 W, 240 V, 10 A
4" ϕ SS PIPE, 300°F
a
b
c
d
e
MOVING BED
SULFUR GENERATOR
f
1/4" ϕ COPPER TUBING
1/2" ϕ T-316 SS PIPE
GAS HEATER
2000 W, 240 V, 16 AMPS
2" ϕ SS PIPE, 300°F
g
NITROGEN
1/2" ϕ COPPER TUBING
1/4" ϕ COPPER TUBING
h

Process Flowsheet (Preliminary Drawing) Dwg. 2485

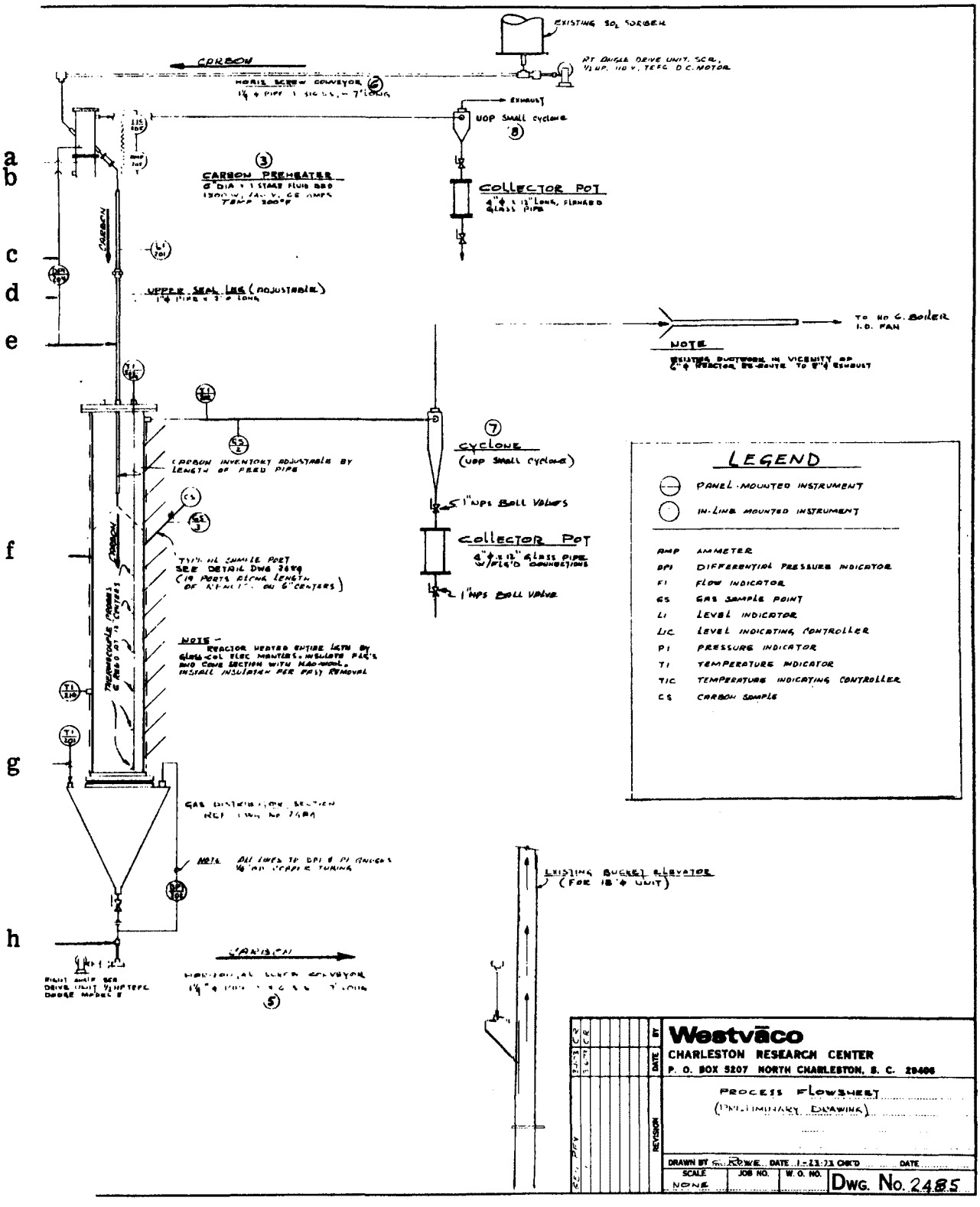

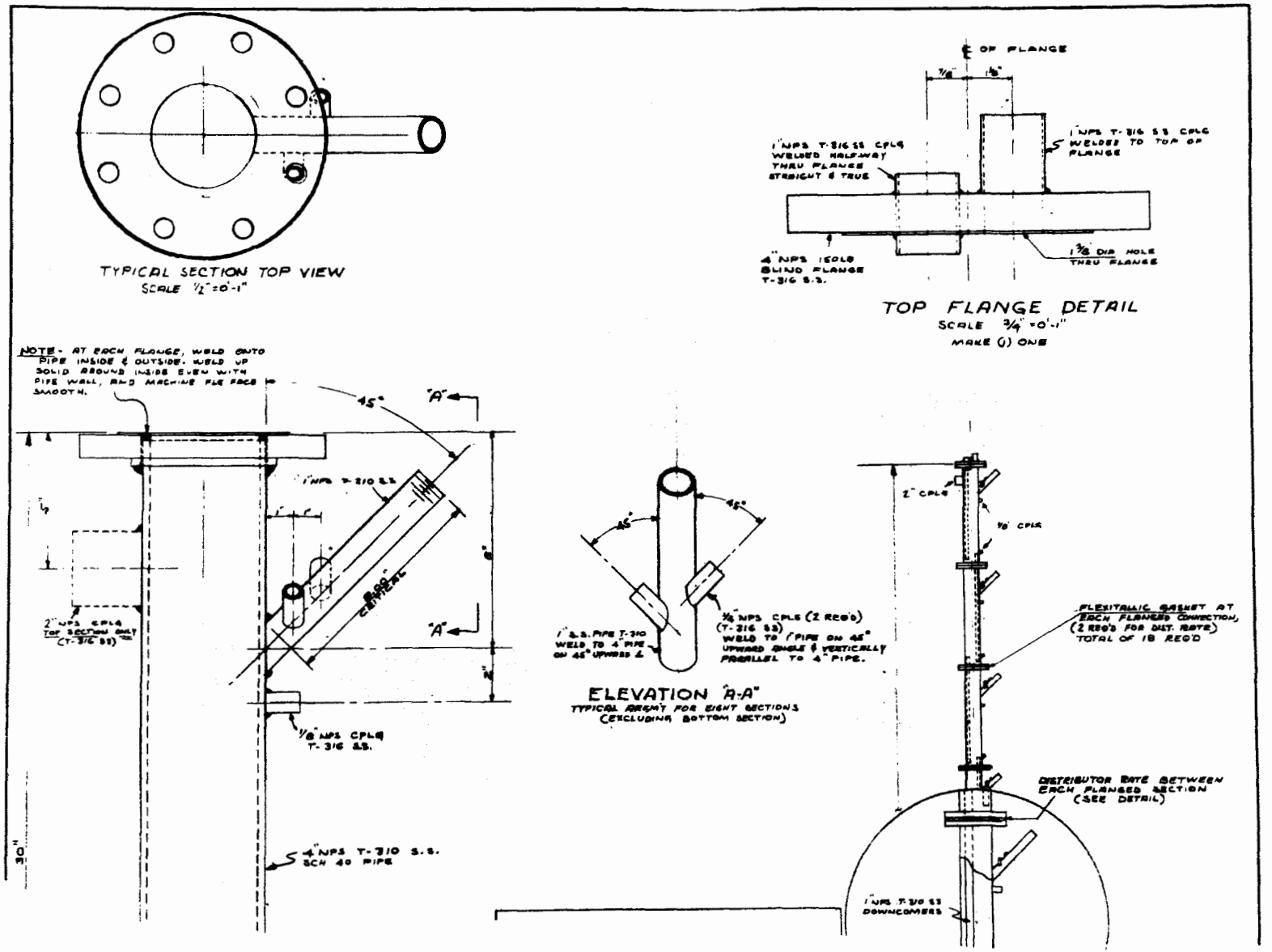
TYPICAL SECTION TOP VIEW
SCALE 1/2"=0'-1"
℄ OF FLANGE
1" NPS T-316 SS CPLG WELDED HALFWAY THRU FLANGE STRAIGHT & TRUE
1" NPS T-316 SS CPLG WELDED TO TOP OF FLANGE
4" NPS 150LB BLIND FLANGE T-316 S.S.
1 3/8 DIA HOLE THRU FLANGE
TOP FLANGE DETAIL
SCALE 3/4"=0'-1"
MAKE (1) ONE
NOTE - AT EACH FLANGE, WELD ONTO PIPE INSIDE & OUTSIDE. WELD UP SOLID AROUND INSIDE EVEN WITH PIPE WALL, AND MACHINE FLE FACE SMOOTH.
45°
"A"
1" NPS T-310 SS
8.00" CENTERS
2" NPS CPLG TOP SECTION ONLY (T-316 SS)
1/8" NPS CPLG T-316 SS.
4" NPS T-310 S.S. SCH 40 PIPE
1" S.S. PIPE T-310 WELD TO 4" PIPE ON 45° UPWARD ∠
1/8" NPS CPLG (2 REQ'D) (T-316 SS) WELD TO 1" PIPE ON 45° UPWARD ANGLE & VERTICALLY PARALLEL TO 4" PIPE.
ELEVATION "A-A"
TYPICAL ARRANGT FOR EIGHT SECTIONS (EXCLUDING BOTTOM SECTION)
2" CPLG
1/8" CPLG
FLEXITALLIC GASKET AT EACH FLANGED CONNECTION, (2 REQ'D FOR DIST. RATE) TOTAL OF 18 REQD
DISTRIBUTOR RATE BETWEEN EACH FLANGED SECTION (SEE DETAIL)
1" NPS T-310 SS DOWNCOMERS

4" Diameter Stainless Steel
Fluid Bed Reactor (Fabrication)

Dwg. 2376

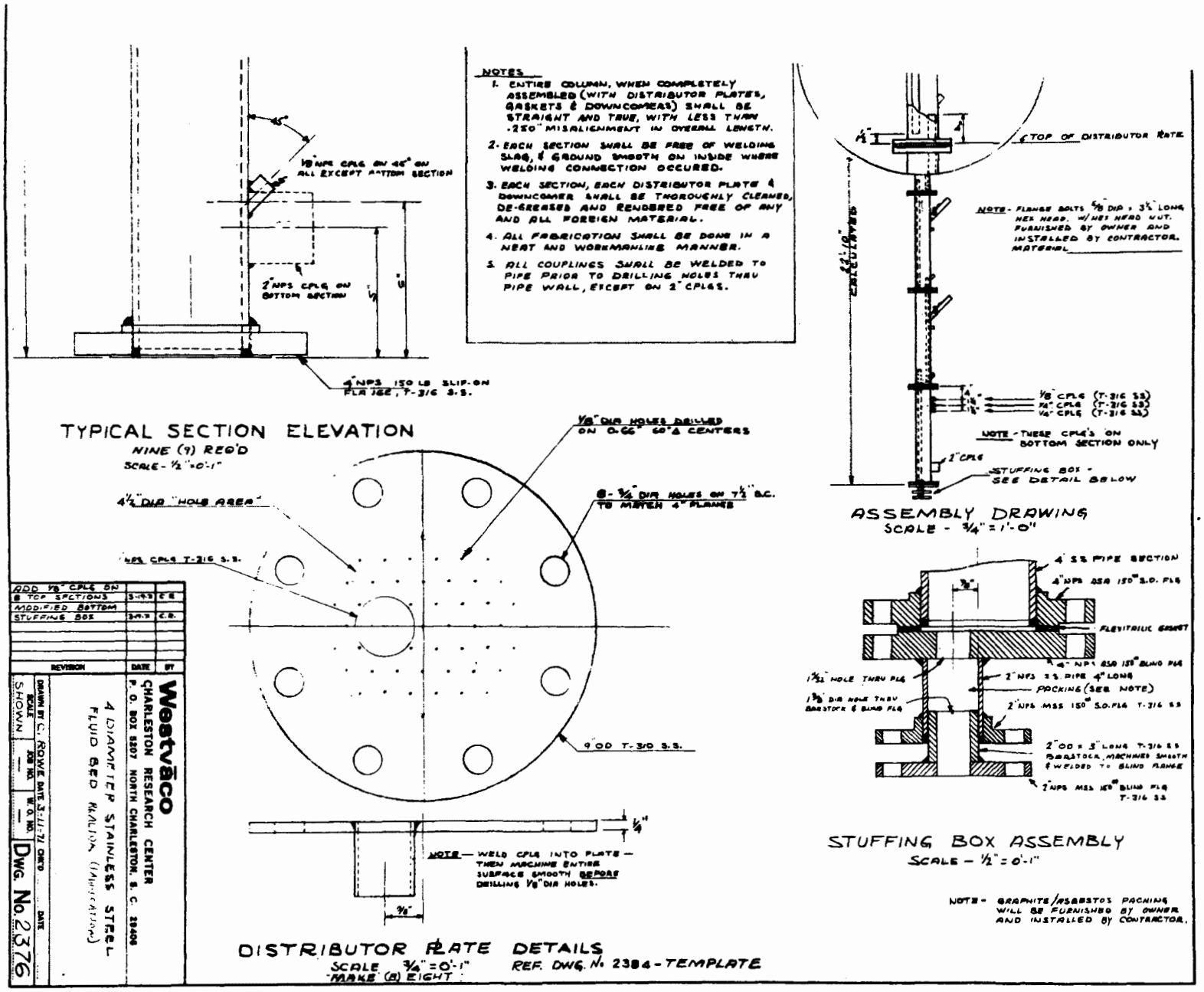

GENERAL NOTES

1 – ENTIRE ASSEMBLY TO BE WELL-GROUNDED ELECTRICALLY

2 – COLUMN HEATERS (ON HAND) ARE BY CHROMALOX, SPIRAL-WOUND INCONEL SHEATH, 2400 WATTS 240 VAC. ATTACHMENT BY HEAT TRANSFER CEMENT, AND INSTALLED ONE HEATER PER 30' LONG COLUMN SECTION. SEE STAGE DETAIL PER DWG.

3 – ASSEMBLY TO BE INSTALLED WITH MIN. OF 24" SLACK IN TUBING & ELECTRICAL LINES TO REGENERATOR SHELL TO ALLOW 24" UPWARD LIFT OF ASSEMBLED SECTIONS

4 – COLUMN INSULATION ON EACH STAGE (SECTION) TO BE 4" THICK HI-TEMP, APPLIED IN MOLDED REMOVABLE SECTIONS (PRE-FABRICATED BY OTHERS). CARBON HEATER, INDICATED PIPING & GAS HEATER TO BE INSULATED WITH 4" THICK ALUMINUM-COVERED FIBERFRAX OR EQUAL.

5 – STEAM PIPING TO BE ELECTRICALLY-TRACED WITH METAL-SHEATHED HEATING CABLE SIMILAR TO CHROMALOX TYPE MI, & INSULATED WITH ½" FOAMGLAS (BY PITTSBURG-CORNING). 15 WATTS PER FT OF PIPE TOTAL REQ'D ~~[illegible]~~ 30 FT.

6 – USE EXISTING TEMP/POWER CONTROLLERS & 4" ϕ GLASS COLUMN FOR TIC 102-107 (6 UNITS) NOW IN USE ON

7 – ENTIRE ASSEMBLY TO BE PRESSURE-TESTED WITH NITROGEN PRIOR TO ATTACHING INSULATION. WORK TO BE PERFORMED BY CONTRACTOR UNDER DIRECTION OF WESTVACO RESEARCH DEPT PERSONNEL.

8 – SAFETY INTERLOCKS & ALARMS – GAS SHUTOFF VALVE, V-101, SHALL BE INTERLOCKED TO CLOSE WHEN EXHAUST BLOWER IS OFF. dPIA 101, HTA 101,2 OR LFA 101 SHALL ACTIVATE AN ALARM ON THE PANELBOARD.

INSTRUMENT LEGEND

◯ – LOCAL (IN-LINE) MOUNT

◐ – PANEL MOUNT

HTA – HIGH TEMP ALARM
TIC – TEMP INDICATING CONTROLLER
LFA – LOW FLOW ALARM
LIC – LEVEL INDICATING CONTROLLER
CGA – COMBUSTIBLE (OR TOXIC) GAS ALARM
dPI – DIFFERENTIAL PRESSURE INDICATOR
LC – LEVEL CONTROLLER
TI – TEMP. INDICATOR

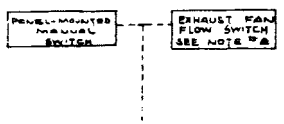

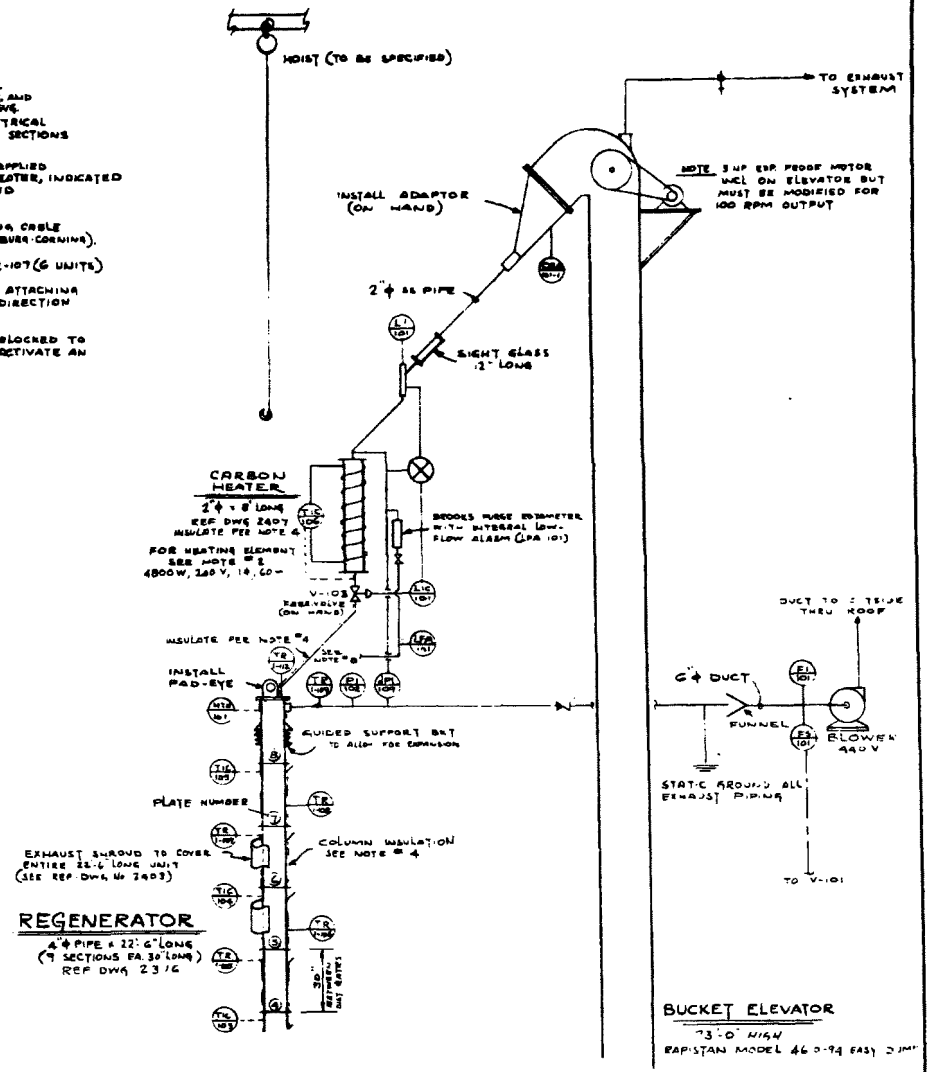

4" Diameter Fluidized Bed Regenerator Located at No. 6 Power Boiler

Dwg. 2399

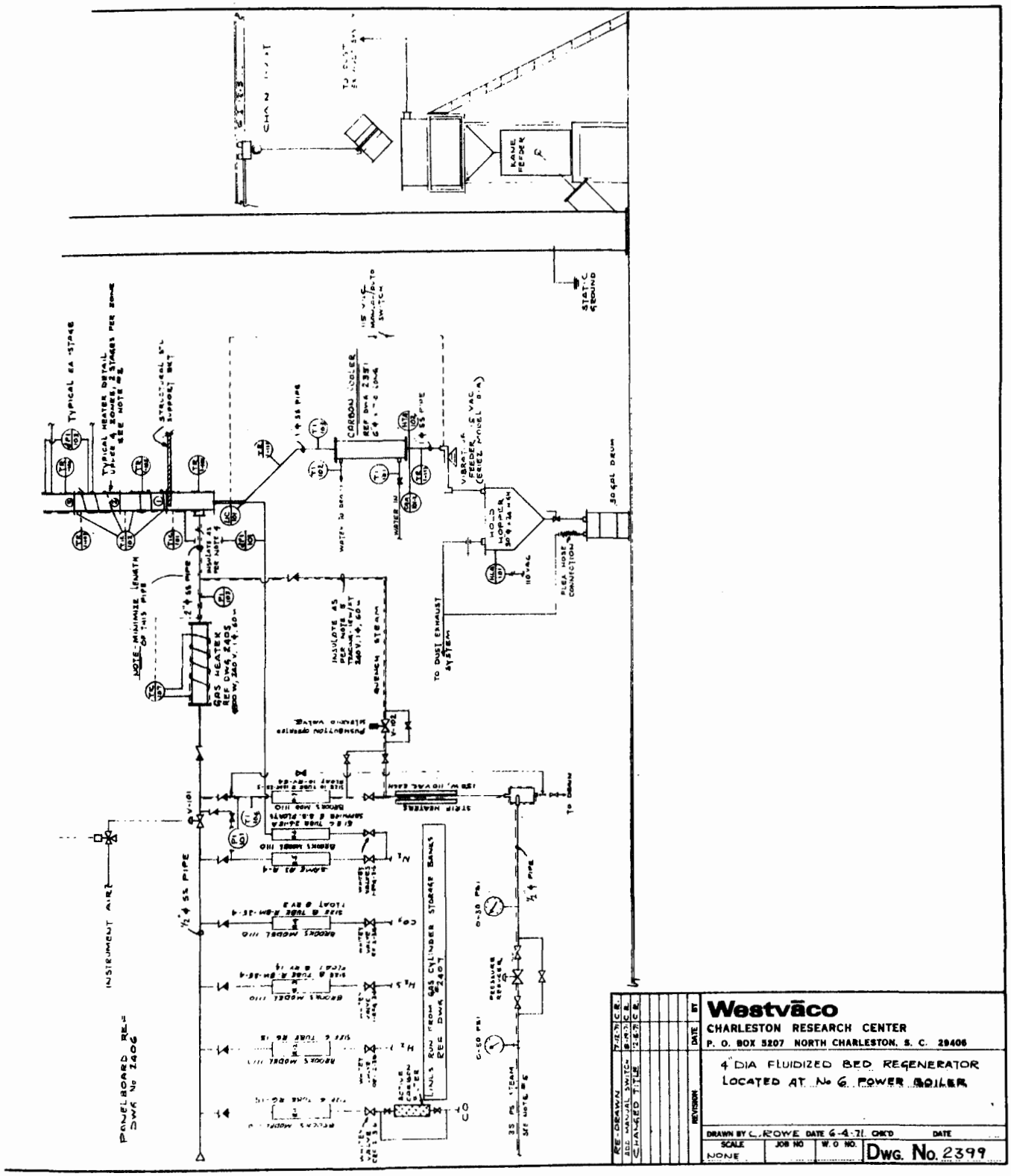

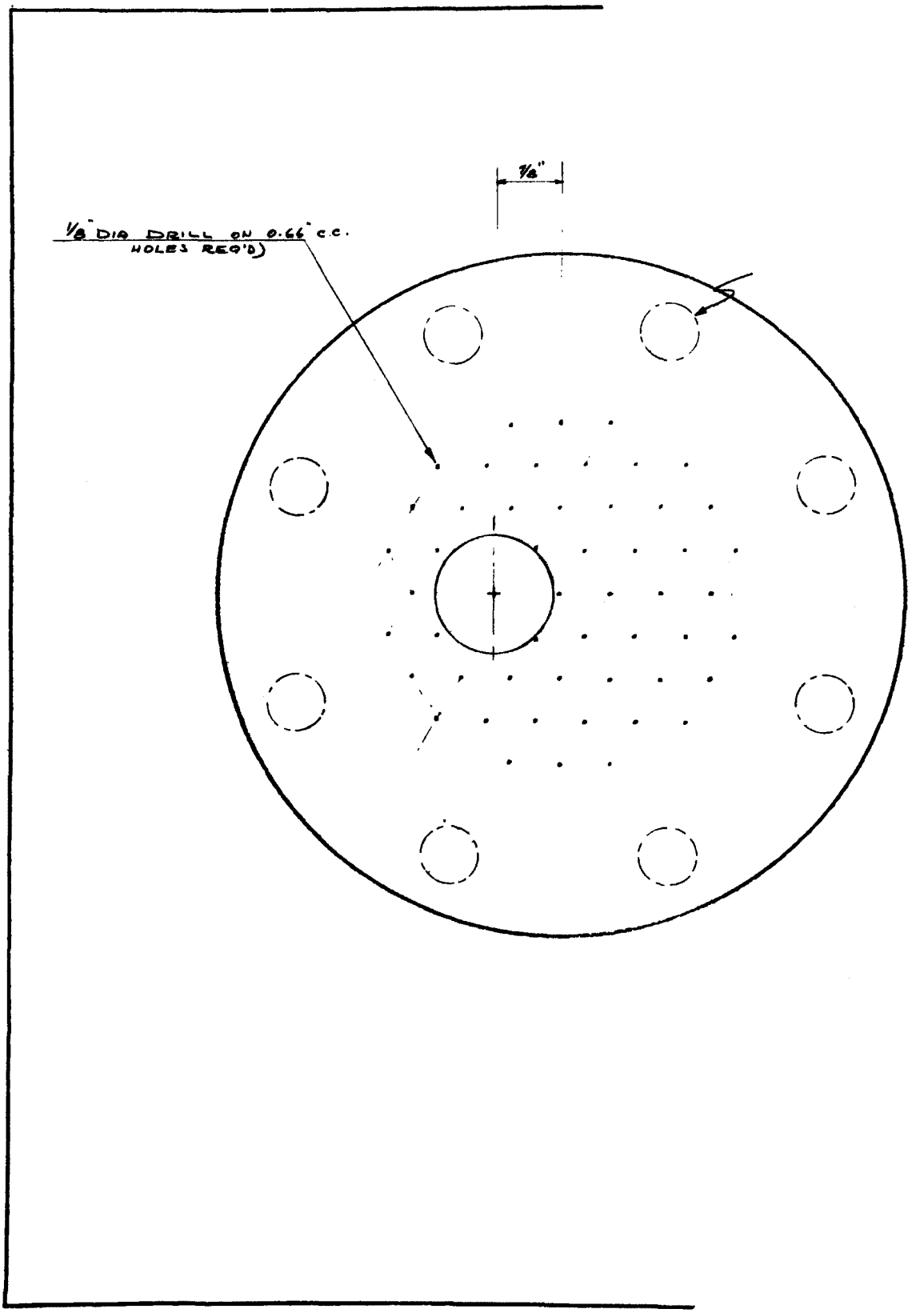
7/8"
1/8" DIA DRILL ON 0.66" C.C.
HOLES REQ'D)

Distributor Plate Template - 4" Diameter Stainless Steel Reactor

Dwg. 2385

8- 3/4" ϕ HOLES TO MATCH 4" NPS FLG'S

9" O.D. x 1/4" TK T-310 S.S. PLATE

			BY
			DATE
			REVISION

Westvaco
CHARLESTON RESEARCH CENTER
P. O. BOX 5207 NORTH CHARLESTON, S. C. 29406

DISTRIBUTOR PLATE
TEMPLATE
4" DIA S.S. REACTOR

DRAWN BY: W. ROWE DATE 4-5-71 CHK'D ____ DATE ____

SCALE	JOB NO.	W. O. NO.	DWG. No. 2385
FULL	—	—	

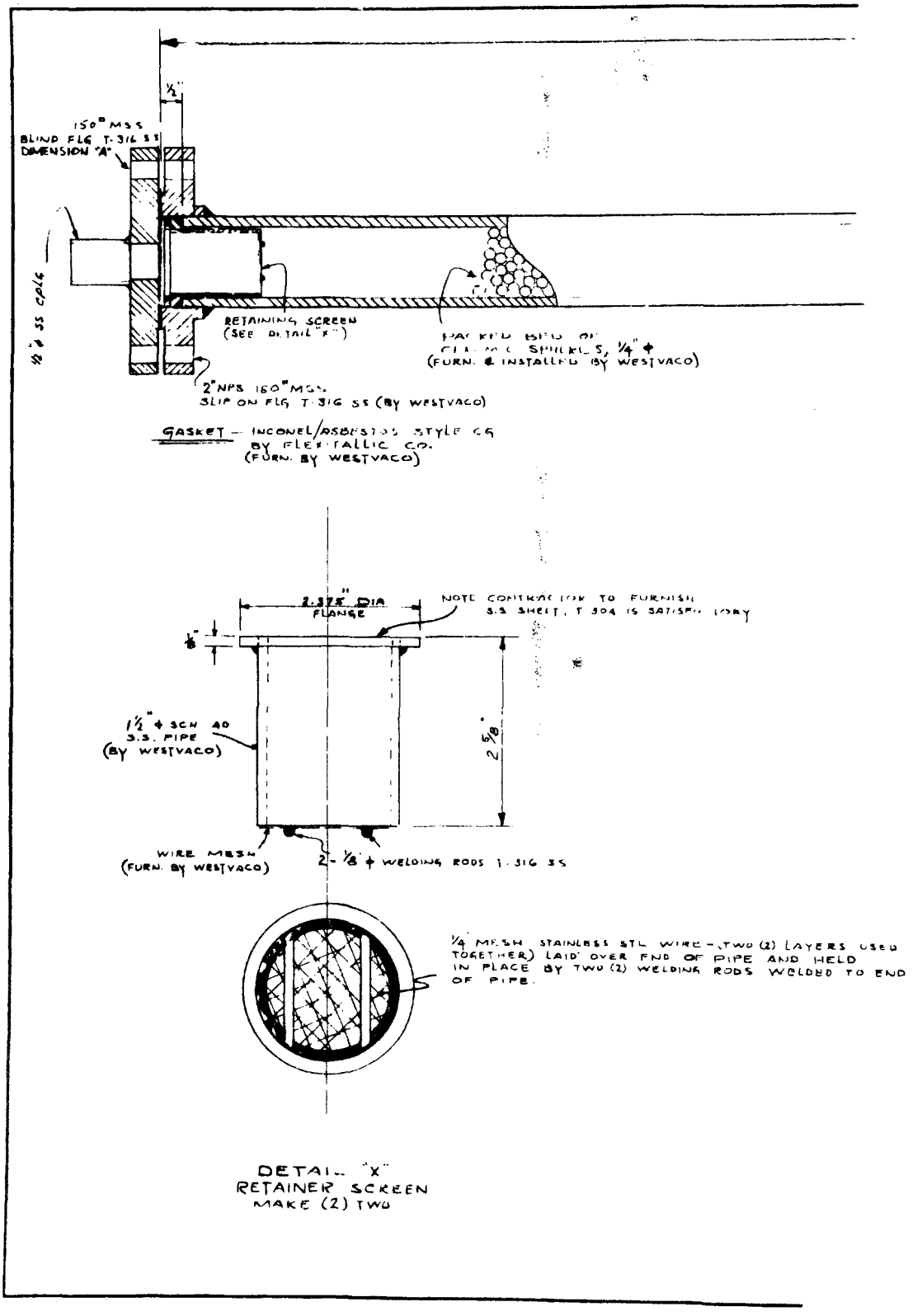

DETAIL "X"
RETAINER SCREEN
MAKE (2) TWO

Gas Heater for 8"Ø Moving Bed Sulfur Generator and 4"Ø H_2S Generator/Sulfur Stripper

Dwg. 2487

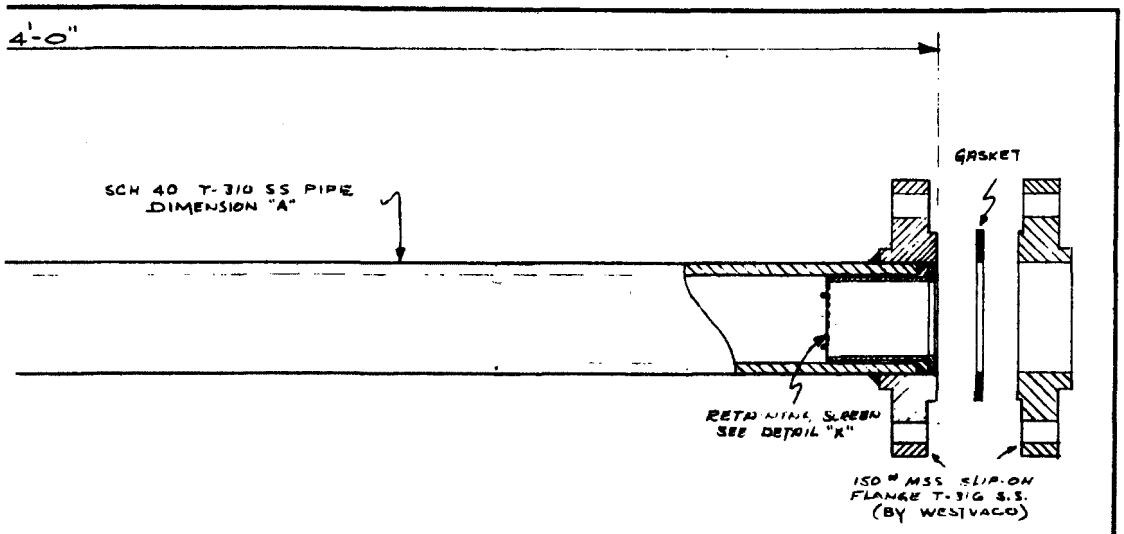

NOTE 1) INTERNAL (OPERATING) TEMP APROX 1200°F
2) SHELL TEMP APROX 1500°F

SIZE	DIMENSION "A"
4"Ø UNIT	2" NPS
8"Ø UNIT	4" NPS

BY	**Westvaco**	
DATE	CHARLESTON RESEARCH CENTER P. O. BOX 5207 NORTH CHARLESTON, S. C. 29406	
REVISION	GAS HEATER FOR 8"Ø MOVING BED SULFUR GENERATOR AND 4"Ø H_2S GENERATOR/ SULFUR STRIPPER	
	DRAWN BY C. ROWE DATE 2-15-73 CHK'D ..... DATE	
	SCALE ½"=0'-1" / JOB NO. - / W. O. NO. -	DWG. No. 2487

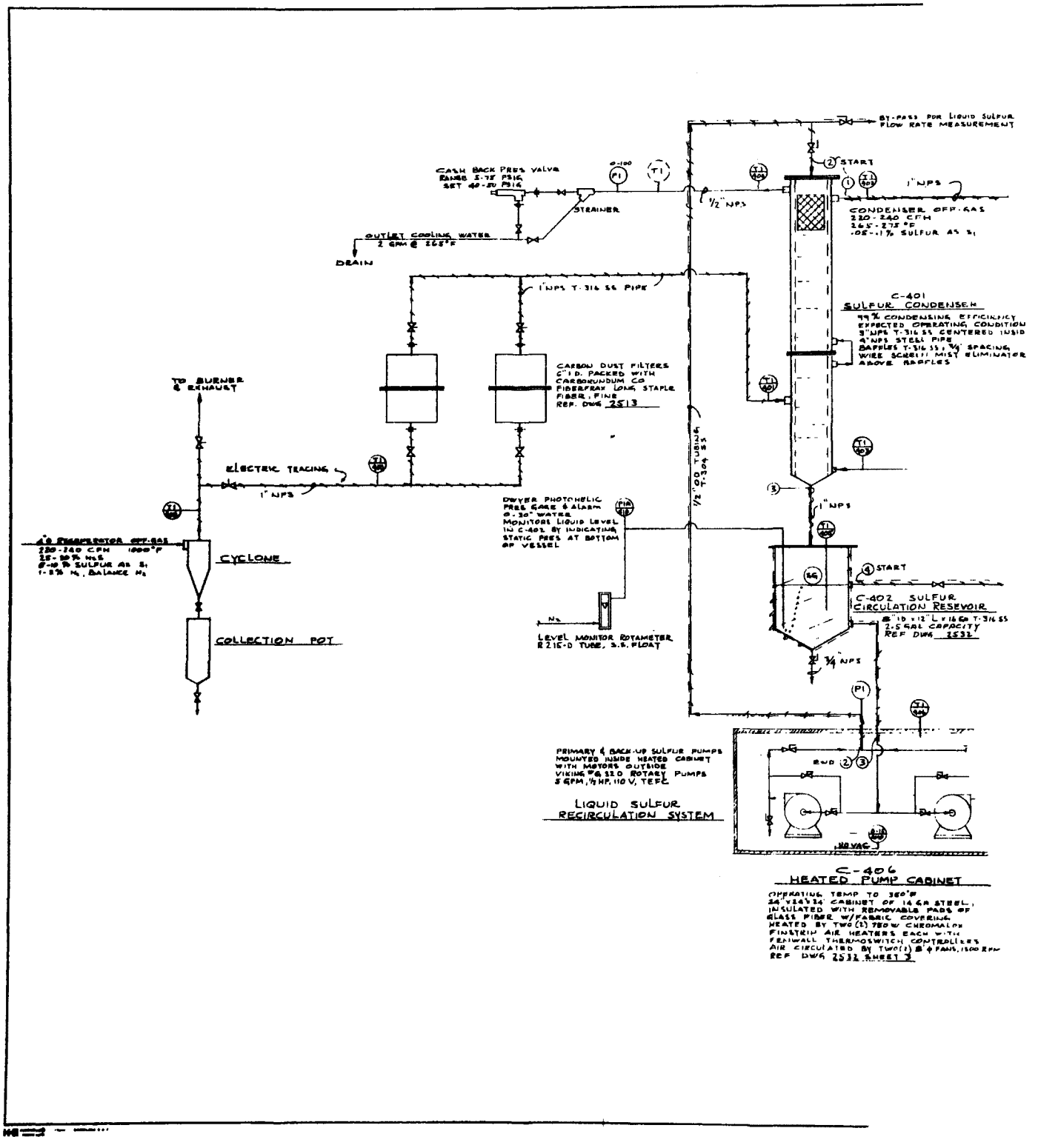
BY-PASS FOR LIQUID SULFUR FLOW RATE MEASUREMENT
START
CASH BACK PRES VALVE
RANGE 5-75 PSIG
SET 40-50 PSIG
STRAINER
OUTLET COOLING WATER
2 GPM @ 265°F
DRAIN
1/2" NPS
1" NPS
CONDENSER OFF-GAS
220-240 CFM
265°-275°F
.05-.1% SULFUR AS S1
1" NPS T-316 SS PIPE
C-401
SULFUR CONDENSER
99% CONDENSING EFFICIENCY
EXPECTED OPERATING CONDITION
3" NPS T-316 SS CENTERED INSID
4" NPS STEEL PIPE
BAFFLES T-316 SS 1 3/4" SPACING
WIRE SCREEN MIST ELIMINATOR
ABOVE BAFFLES
CARBON DUST FILTERS
6" I.D. PACKED WITH
CARBORUNDUM CO
FIBERFRAX LONG STAPLE
FIBER, FINE
REF. DWG 2513
TO BURNER & EXHAUST
ELECTRIC TRACING
1" NPS
1/2" OD TUBING T-304 SS
DWYER PHOTOHELIC
PRES GAGE & ALARM
0-30" WATER
MONITORS LIQUID LEVEL
IN C-402 BY INDICATING
STATIC PRES AT BOTTOM
OF VESSEL
1" NPS
CYCLONE
COLLECTION POT
START
C-402 SULFUR
CIRCULATION RESEVOIR
2.5 GAL CAPACITY
REF DWG 2532
LEVEL MONITOR ROTAMETER
R 216-D TUBE, S.S. FLOAT
3/4" NPS
PRIMARY & BACK-UP SULFUR PUMPS
MOUNTED INSIDE HEATED CABINET
WITH MOTORS OUTSIDE
VIKING #G 32.0 ROTARY PUMPS
5 GPM, 1/2 HP, 110 V, TEFC
LIQUID SULFUR
RECIRCULATION SYSTEM
END
110 VAC
C-406
HEATED PUMP CABINET
OPERATING TEMP TO 350°F
24"x24"x24" CABINET OF 14 GA STEEL,
INSULATED WITH REMOVABLE PADS OF
GLASS FIBER W/FABRIC COVERING
HEATED BY TWO (2) 750 W CHROMALOX
FINSTRIP AIR HEATERS EACH WITH
FENWALL THERMOSWITCH CONTROLLERS
AIR CIRCULATED BY TWO (2) 8" φ FANS, 1500 RPM
REF DWG 2532 SHEET 3

Sulfur Condensing System for
SO_2 Recovery Pilot Plant

Dwg. 2537

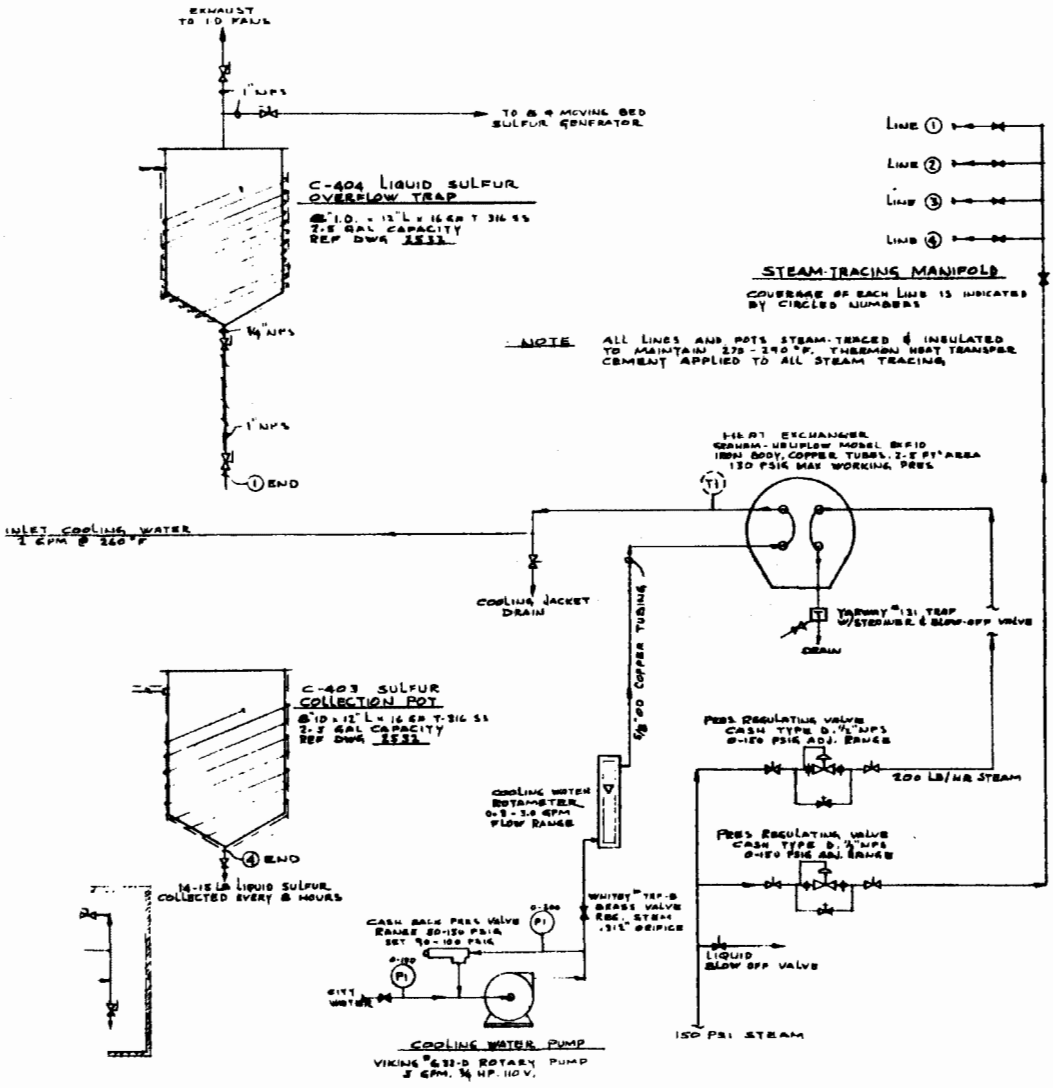

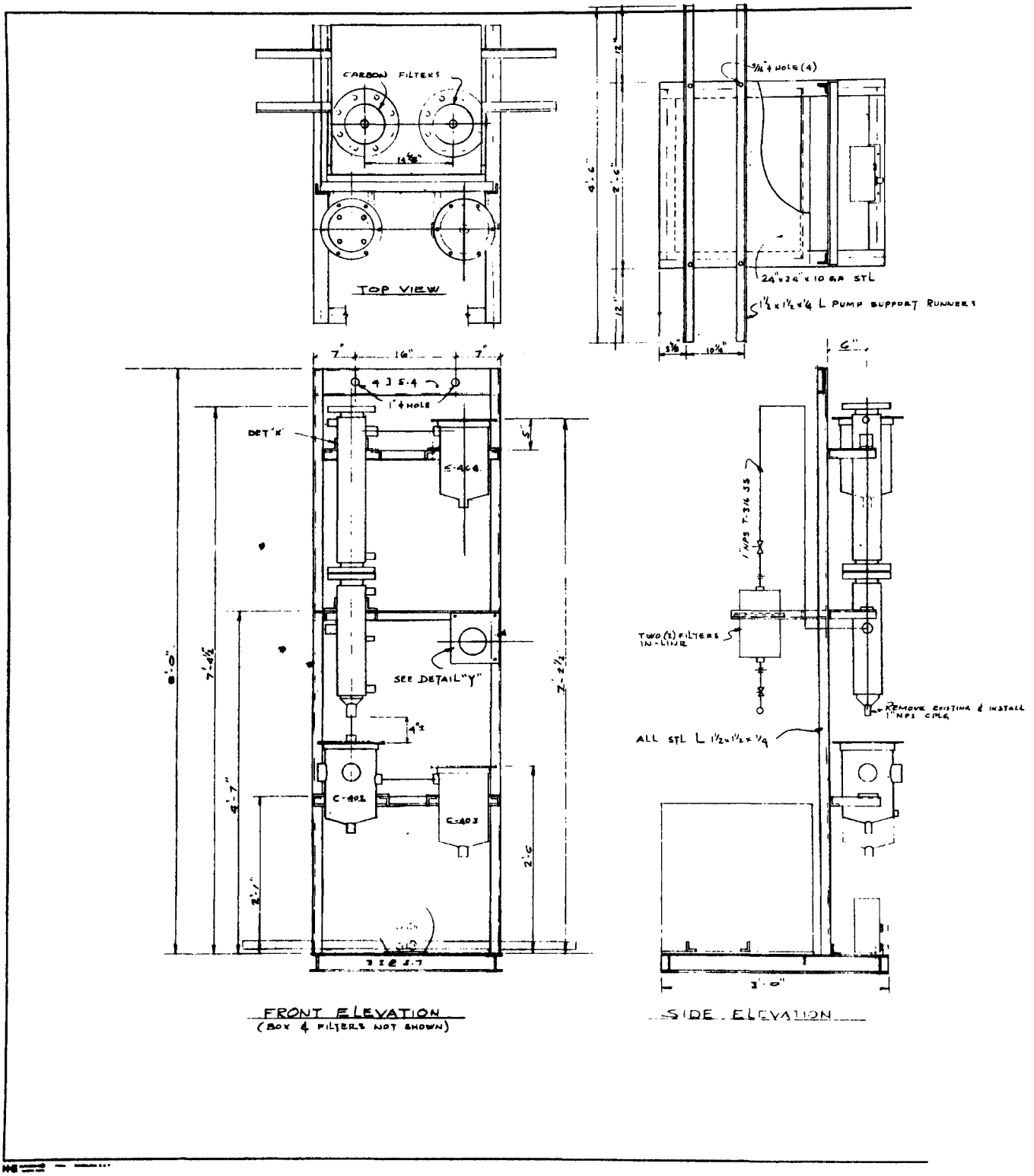
CARBON FILTERS
TOP VIEW
24"x24"x10 GA STL
1½x1½x¼ L PUMP SUPPORT RUNNERS
1" ϕ HOLE
DET 'X'
SEE DETAIL "Y"
TWO (2) FILTERS IN-LINE
REMOVE EXISTING & INSTALL 1" NPS CPLR
ALL STL L 1½x1½x¼
FRONT ELEVATION
(BOX & FILTERS NOT SHOWN)
SIDE ELEVATION

Assembly Drawing - Sulfur Condensing System

Dwg. 2532

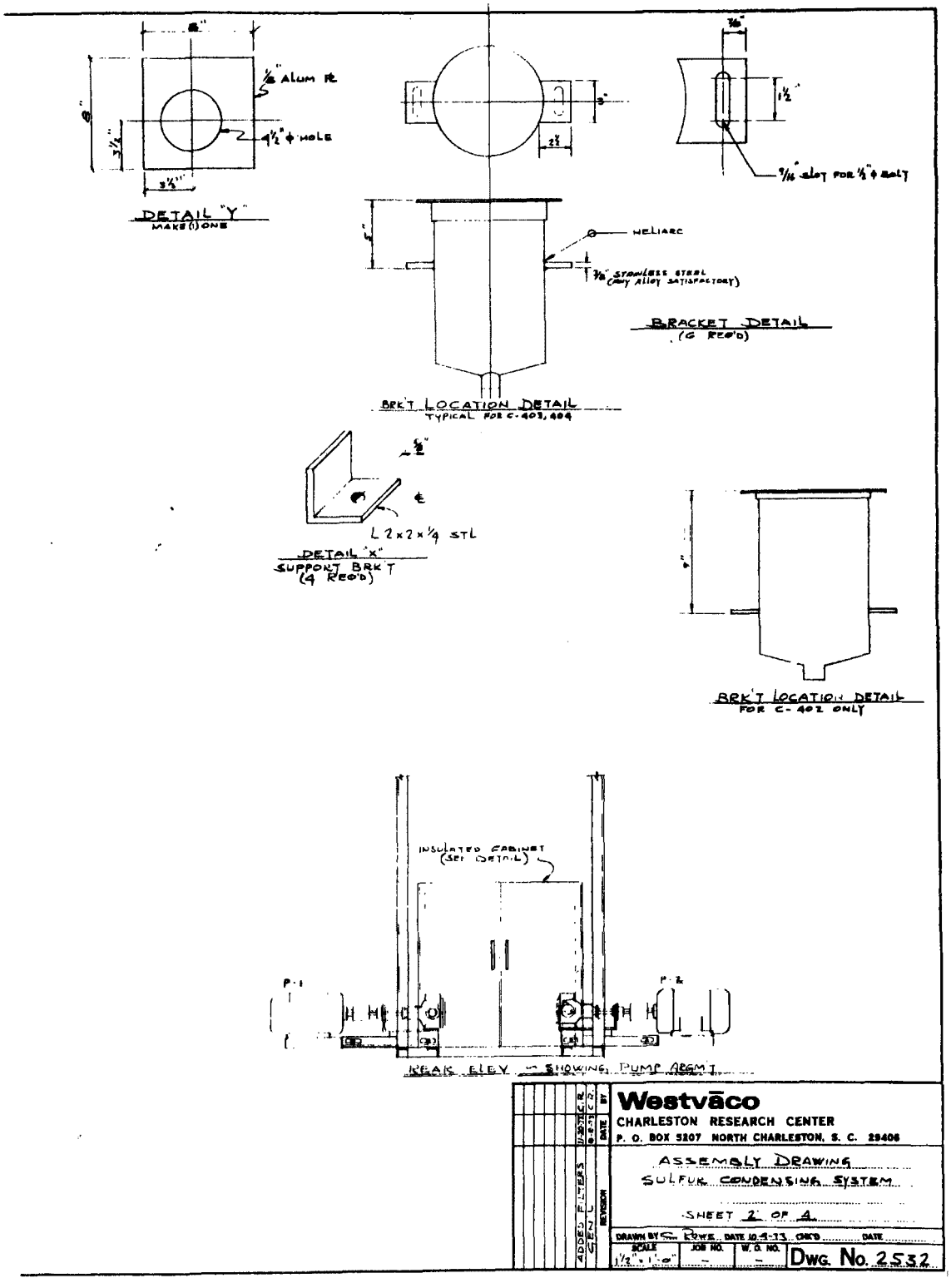

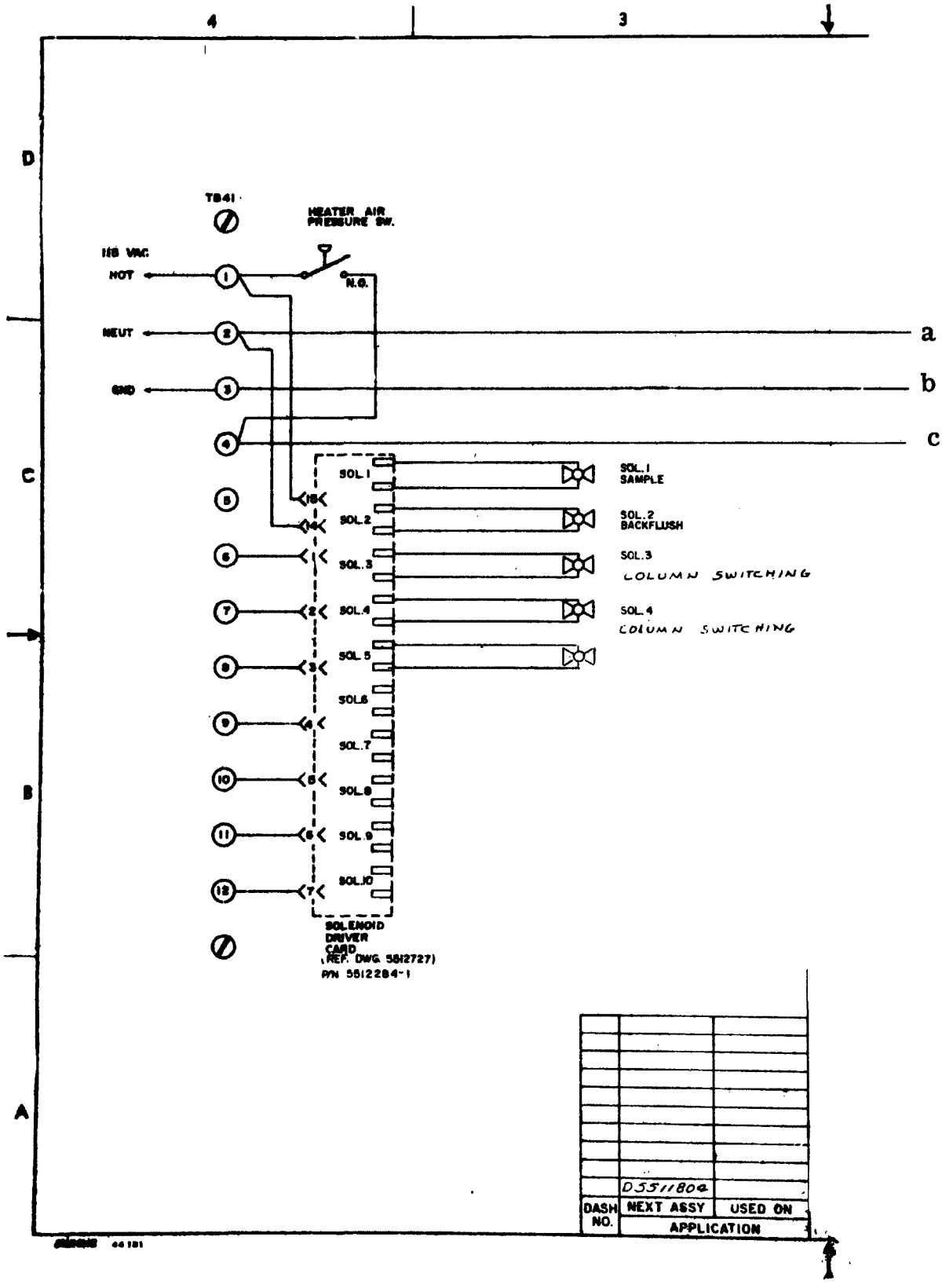
4
3
D
C
B
A
a
b
c
TB41
HEATER AIR PRESSURE SW.
115 VAC
HOT
NEUT
GND
N.O.
SOL.1
SOL.2
SOL.3
SOL.4
SOL.5
SOL.6
SOL.7
SOL.8
SOL.9
SOL.10
SOL.1 SAMPLE
SOL.2 BACKFLUSH
SOL.3 COLUMN SWITCHING
SOL.4 COLUMN SWITCHING
SOLENOID DRIVER CARD (REF. DWG 5812727) P/N 5812284-1
D5511804
DASH NO.
NEXT ASSY
USED ON
APPLICATION

Schematic of Analyzer Dwg. 30460-B

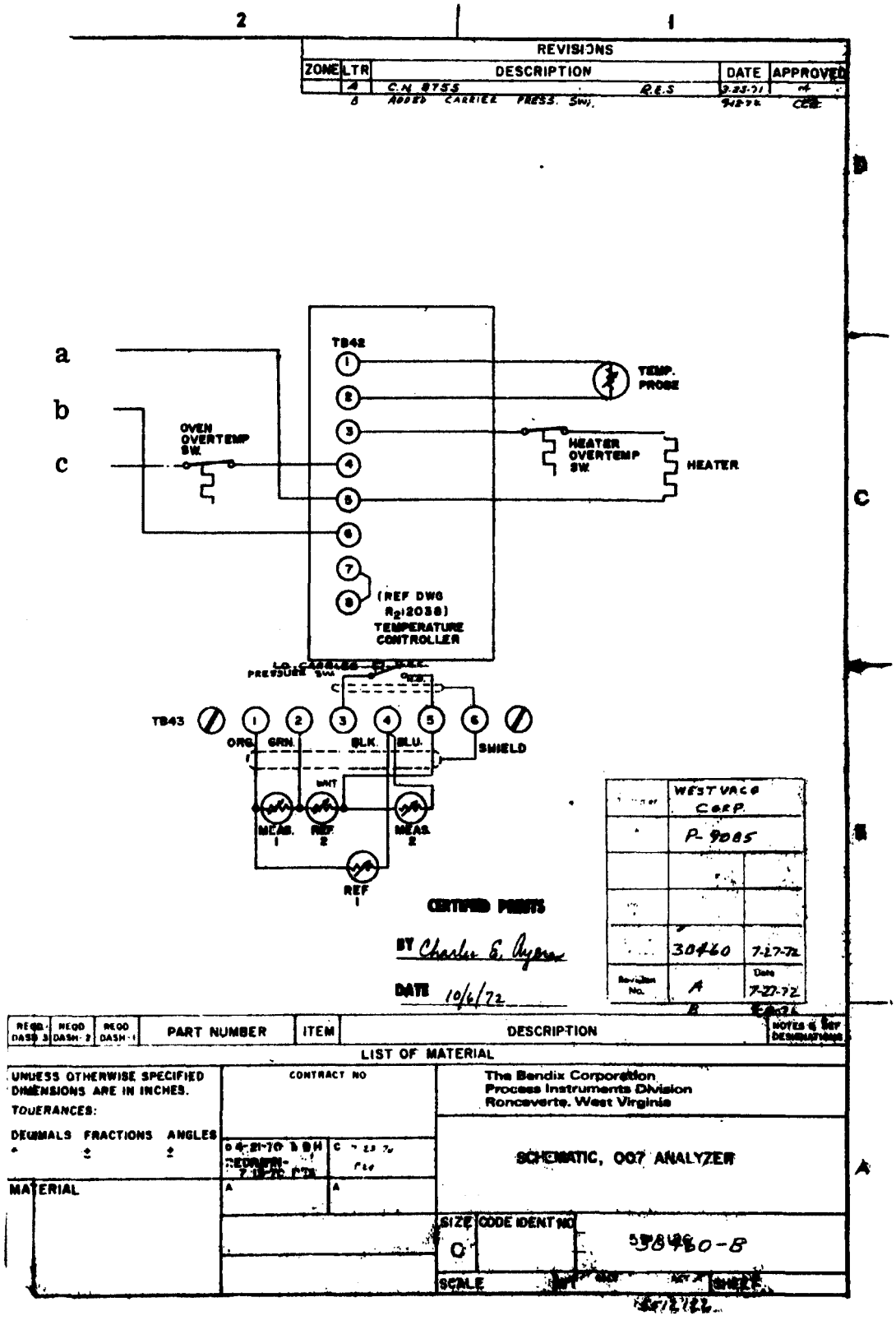

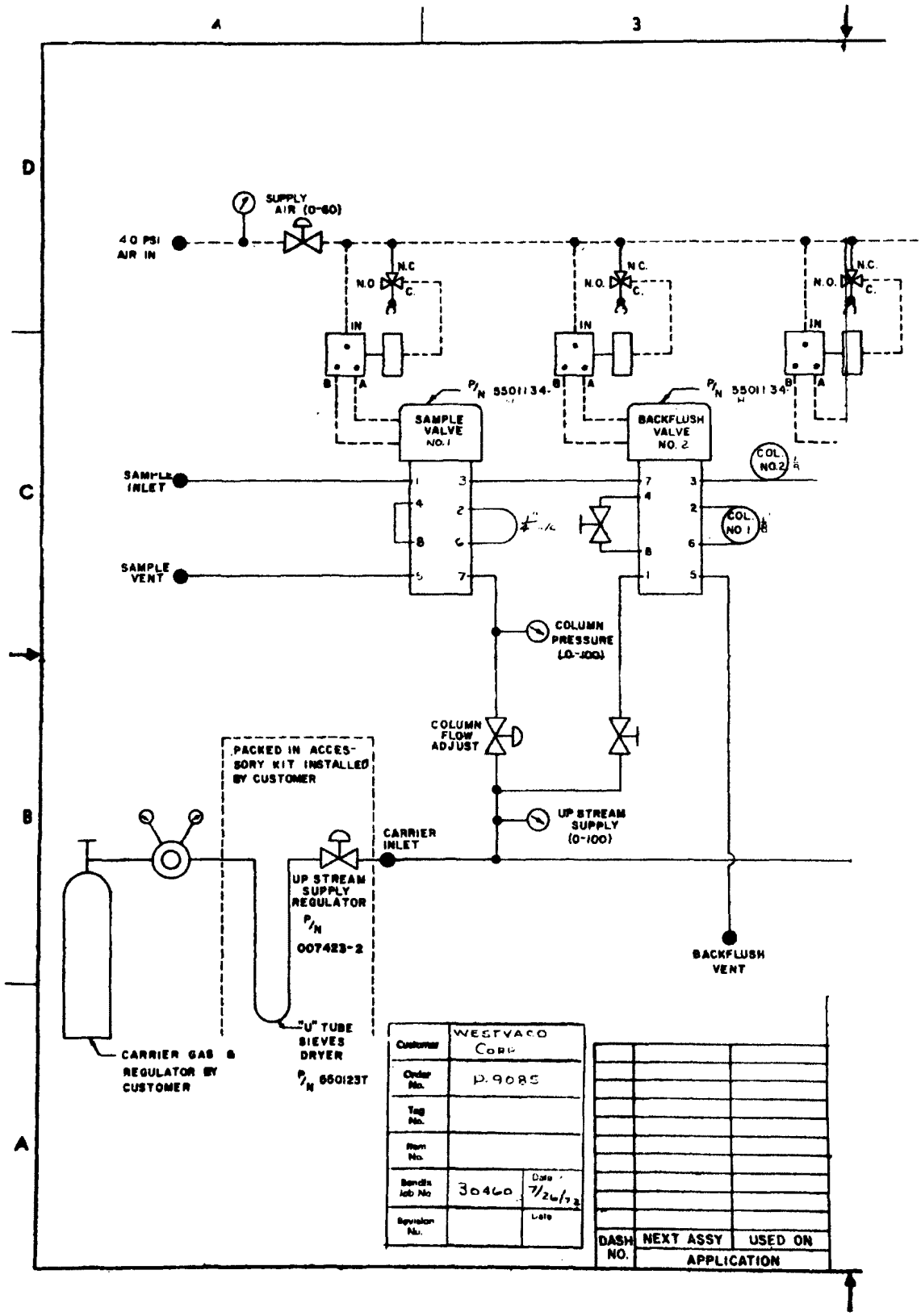
SUPPLY AIR (0-60)
40 PSI AIR IN
N.C.
N.O.
C.
IN
B
A
P/N 550113 4-
SAMPLE VALVE NO. 1
BACKFLUSH VALVE NO. 2
COL. NO. 2
COL. NO. 1
SAMPLE INLET
SAMPLE VENT
COLUMN PRESSURE (0-100)
COLUMN FLOW ADJUST
PACKED IN ACCESSORY KIT INSTALLED BY CUSTOMER
UP STREAM SUPPLY (0-100)
CARRIER INLET
UP STREAM SUPPLY REGULATOR
P/N 007423-2
BACKFLUSH VENT
"U" TUBE SIEVES DRYER
P/N 650123T
CARRIER GAS & REGULATOR BY CUSTOMER
Customer WESTVACO CORP
Order No. P.9085
Tag No.
Item No.
Bendix Job No 30460
Date 7/26/72
Revision No.
Date
DASH NO.
NEXT ASSY
USED ON
APPLICATION

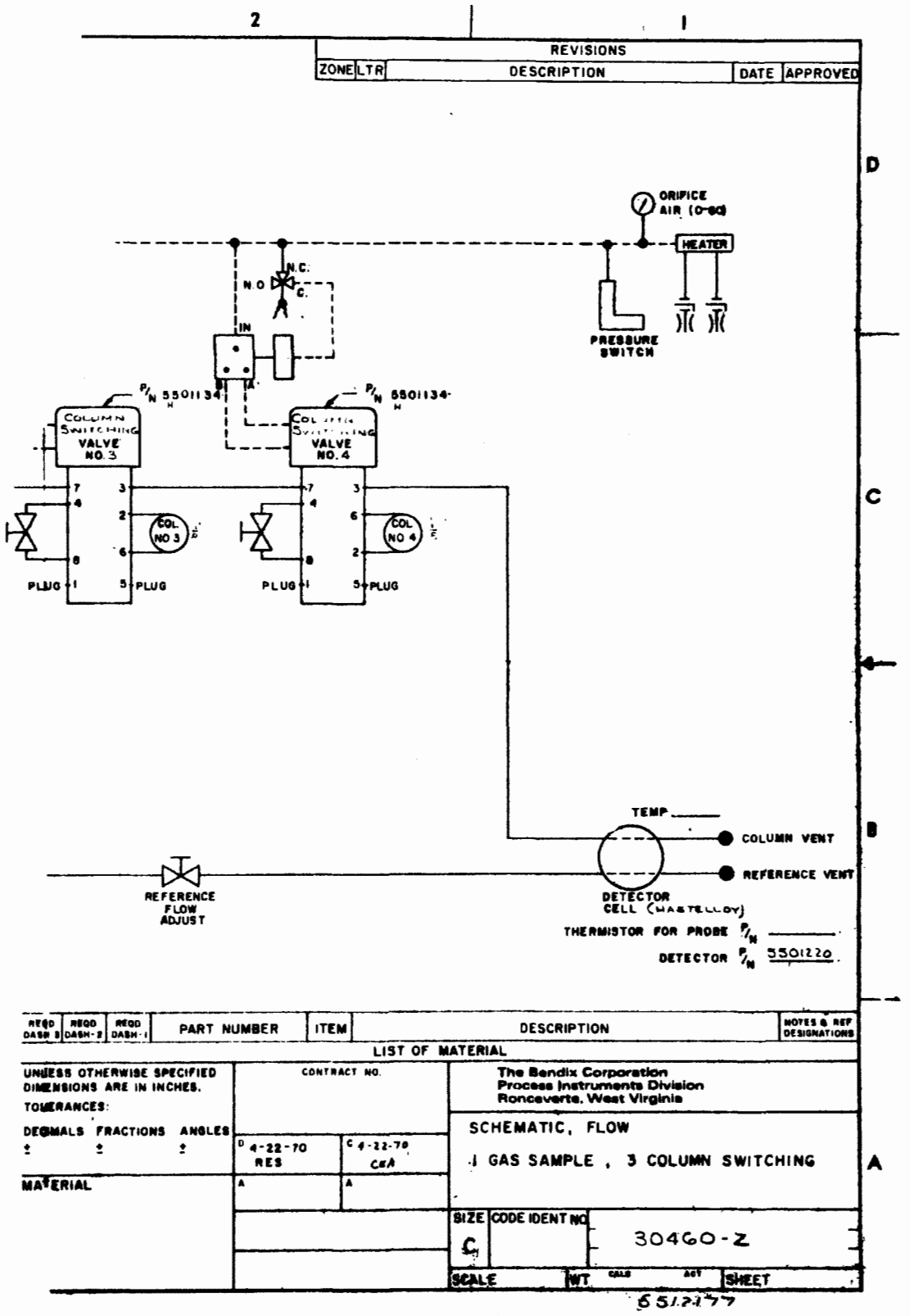
REVISIONS
ZONE LTR DESCRIPTION DATE APPROVED
ORIFICE AIR (0-60)
HEATER
PRESSURE SWITCH
N.C.
N.O
C.
IN
P/N 5501134
COLUMN SWITCHING VALVE NO. 3
COLUMN SWITCHING VALVE NO. 4
COL NO 3
COL NO 4
PLUG
TEMP
COLUMN VENT
REFERENCE VENT
REFERENCE FLOW ADJUST
DETECTOR CELL (HASTELLOY)
THERMISTOR FOR PROBE P/N
DETECTOR P/N 5501220
REQD DASH 3 REQD DASH-2 REQD DASH-1 PART NUMBER ITEM DESCRIPTION NOTES & REF DESIGNATIONS
LIST OF MATERIAL
UNLESS OTHERWISE SPECIFIED DIMENSIONS ARE IN INCHES.
TOLERANCES:
DECIMALS FRACTIONS ANGLES
CONTRACT NO.
The Bendix Corporation
Process Instruments Division
Ronceverte, West Virginia
SCHEMATIC, FLOW
1 GAS SAMPLE , 3 COLUMN SWITCHING
D 4-22-70 RES
C 4-22-70 CEA
MATERIAL
SIZE C
CODE IDENT NO
30460-Z
SCALE WT SHEET
651277

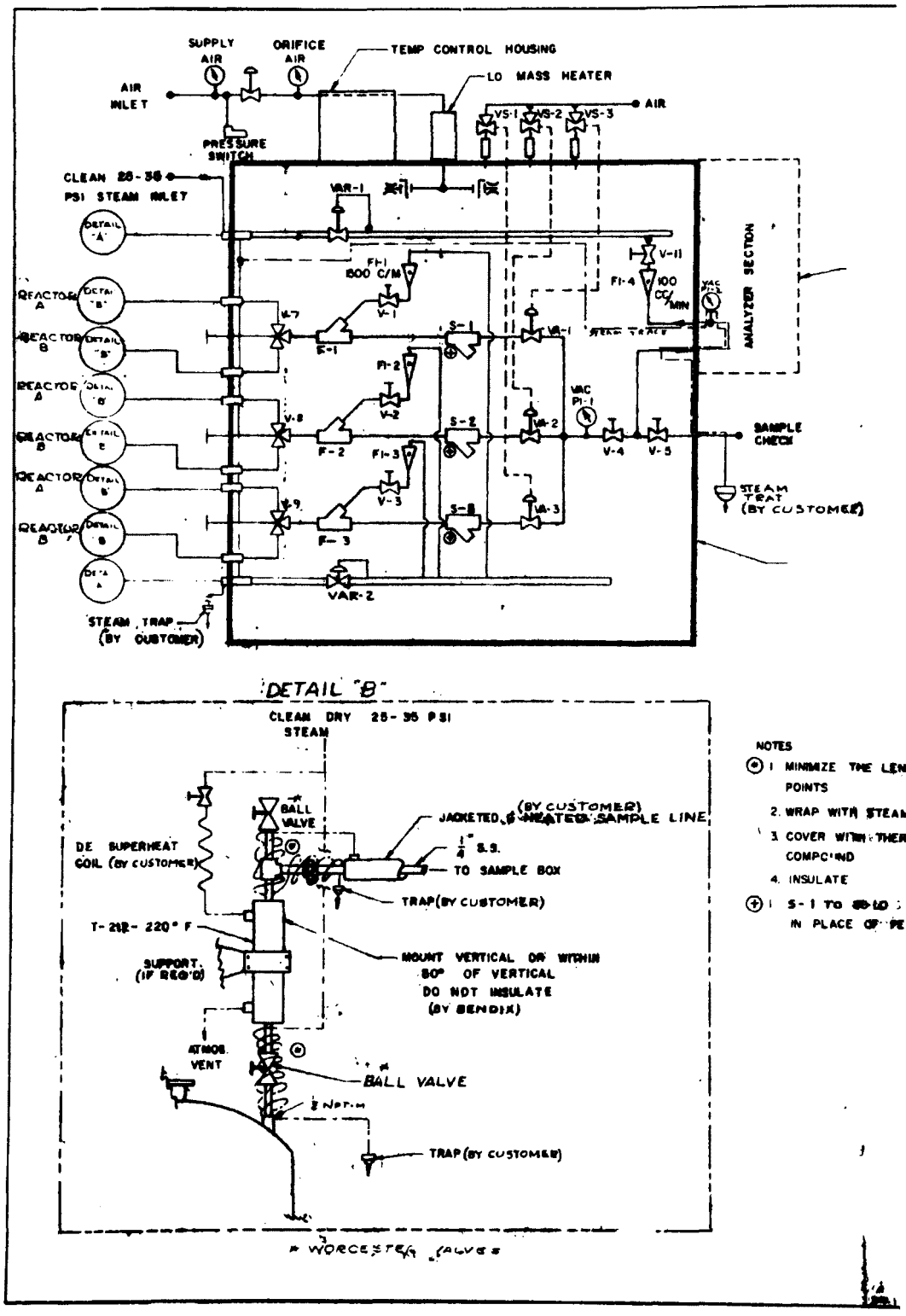
SUPPLY AIR
ORIFICE AIR
TEMP CONTROL HOUSING
LO MASS HEATER
AIR INLET
AIR
VS-1
VS-2
VS-3
PRESSURE SWITCH
CLEAN 25-35 PSI STEAM INLET
VAR-1
FI-1 1500 C/M
V-1
V-11
FI-4 100 CC/MIN
ANALYZER SECTION
REACTOR A
REACTOR B
REACTOR A
REACTOR B
REACTOR A
REACTOR B
V-7
F-1
S-1
VA-1
FI-2
V-2
V-8
F-2
S-2
VA-2
VAC PI-1
V-4
V-5
SAMPLE CHECK
FI-3
V-3
V-9
F-3
S-3
VA-3
STEAM TRAP (BY CUSTOMER)
VAR-2
STEAM TRAP (BY CUSTOMER)
DETAIL "B"
CLEAN DRY 25-35 PSI STEAM
BALL VALVE
JACKETED, HEATED SAMPLE LINE (BY CUSTOMER)
1/4" S.S.
TO SAMPLE BOX
DE SUPERHEAT COIL (BY CUSTOMER)
TRAP (BY CUSTOMER)
T-212-220° F
SUPPORT (IF REQ'D)
MOUNT VERTICAL OR WITHIN 30° OF VERTICAL DO NOT INSULATE (BY BENDIX)
ATMOS. VENT
BALL VALVE
TRAP (BY CUSTOMER)
* WORCESTER VALVES
NOTES
1 MINIMIZE THE LENGTH OF SAM. LINE AT THESE POINTS
2. WRAP WITH STEAM TUBING 1/4" O.D.
3. COVER WITH THERMON HEAT CONDUCTING COMPOUND
4. INSULATE
1 S-1 TO S-3 TO HAVE GLASS WOOL FILTER IN PLACE OF PERFORATED SCREEN

Gas Sample Handling System
Schematic

Dwg. 30461-F

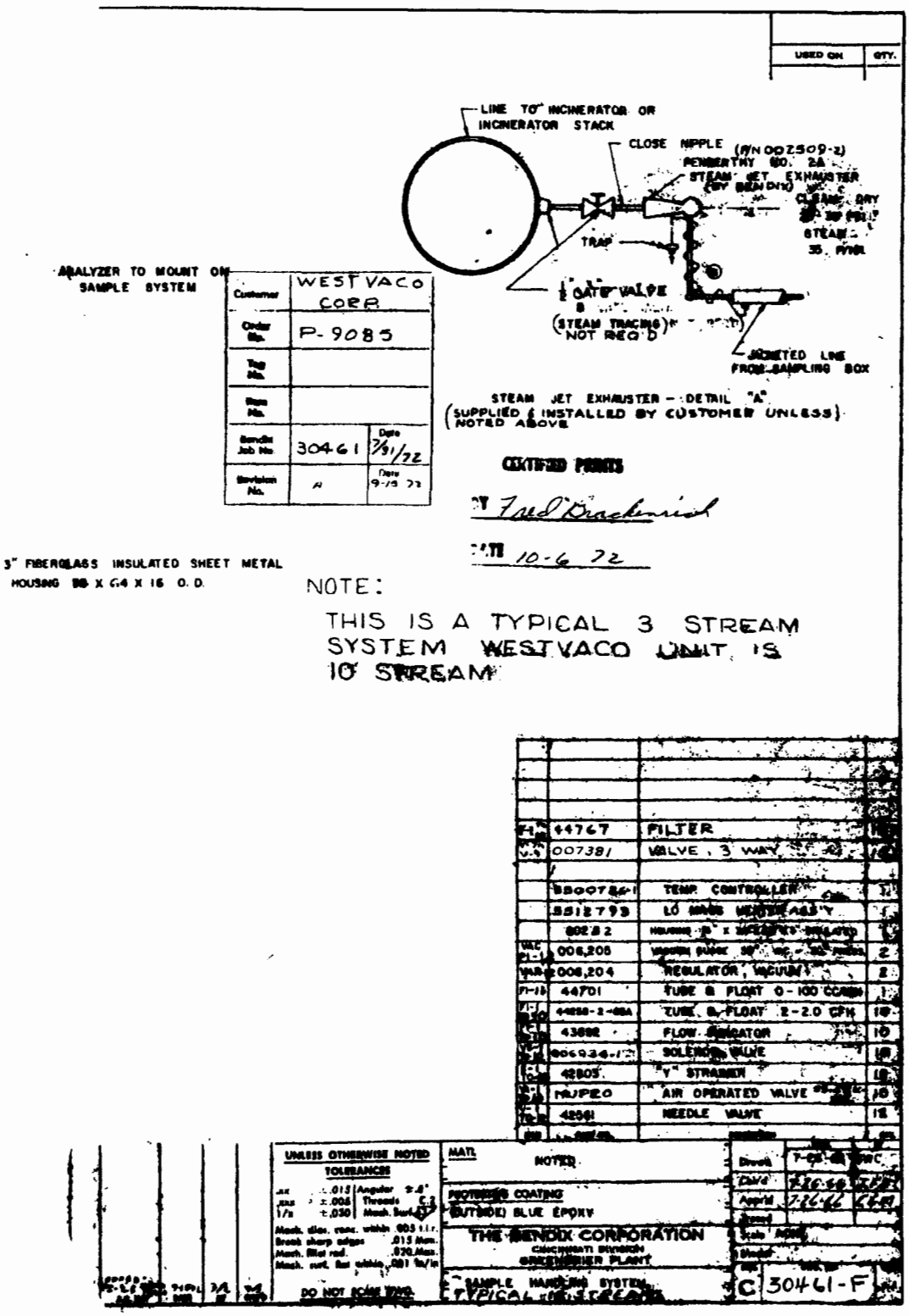

APPENDIX B-4

PILOT PLANT OPERATING MANUAL

		Page
Introduction		
1.	SO_2 Pilot Plant Location and Layout Drawings	727
2.	Block Flowsheets	732
3.	Equipment Schematics	743
4.	Process Control	761
5.	Process Control - 8" Diameter Moving Bed Sulfur Generator and 6" Diameter Pre-conditioner	766
6.	Process Control - 4" Diameter S Stripper/H_2S Generator	775
7.	Pilot Plant Electrical System	781
8.	Start-up and Shutdown Procedures	784

Introduction

The purpose of the operating and instruction manual is to provide appropriate information on equipment and operating procedures. The manual should facilitate the efficient operation of the equipment as well as provide the necessary information to effectively troubleshoot and correct operating problems which might be encountered.

The operating manual is given in three volumes. The first volume contains process description information. The second volume contains complete vendor's information on the maintenance and operation of the equipment. The third volume contains mechanical, electrical, instrumentation, and structural drawings for the SO_2 recovery equipment at No. 6 boiler at Westvaco's Charleston Mill.

The abbreviated manual given here is a condensed version of the first volume covering the information directly needed to operate the pilot plant. This includes block flowsheets, schematic diagrams, start-up and shutdown procedures, and process control information which consists mainly of calibration curves for control of flow rates. The section of process control has been shortened by omitting the numerous calibration curves for rotameters and other flow measuring devices.

APPENDIX B-4-1

SO_2 PILOT PLANT LOCATION AND LAYOUT DRAWINGS

WESTVACO SO_2 RECOVERY PROCESS

NO. 6 BOILER INSTALLATION

PLOT PLAN

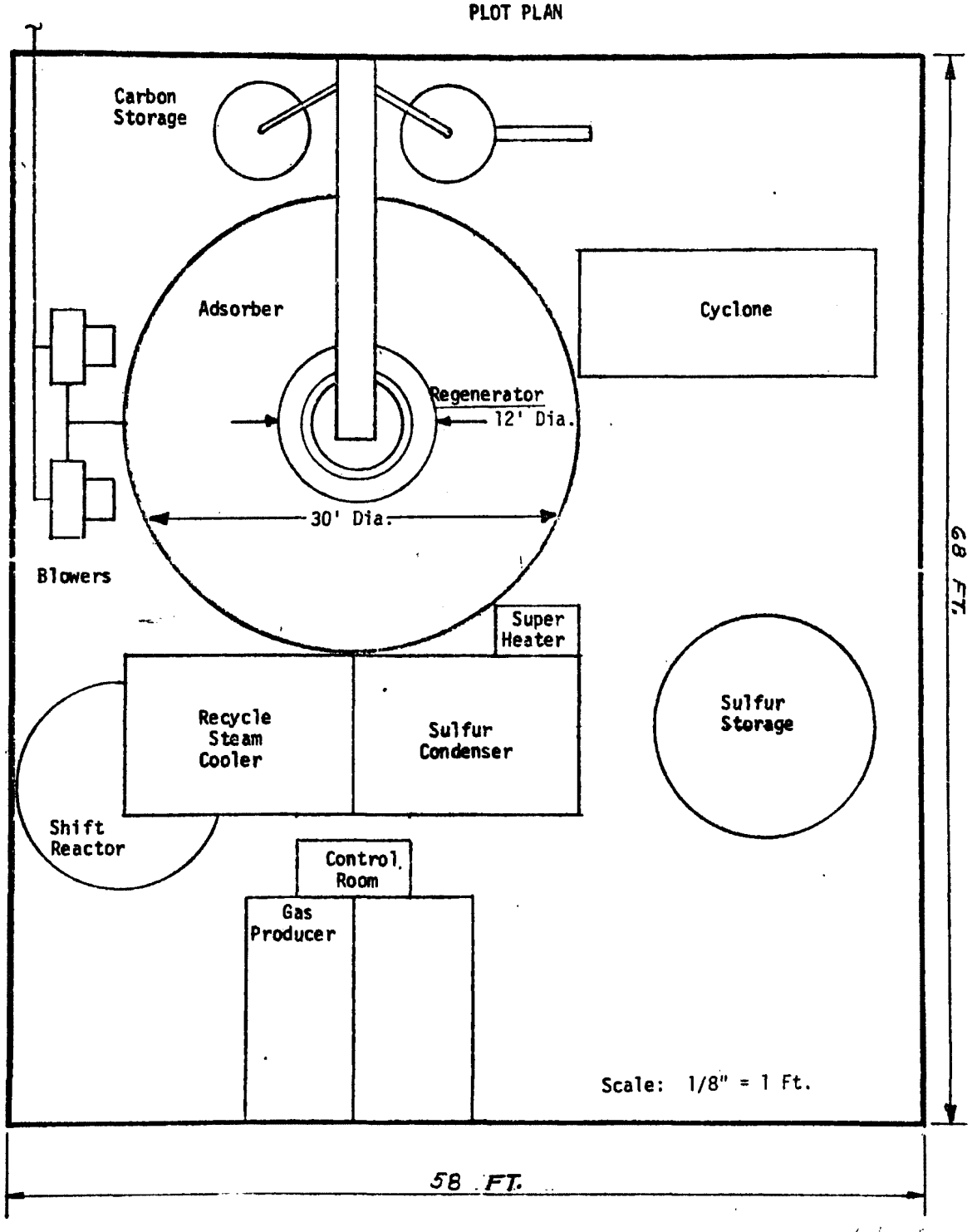

ELEVATION VIEW OF WESTVACO SO_2 RECOVERY PROCESS
AT NO. 6 BOILER - EAST VIEW FROM COOPER RIVER

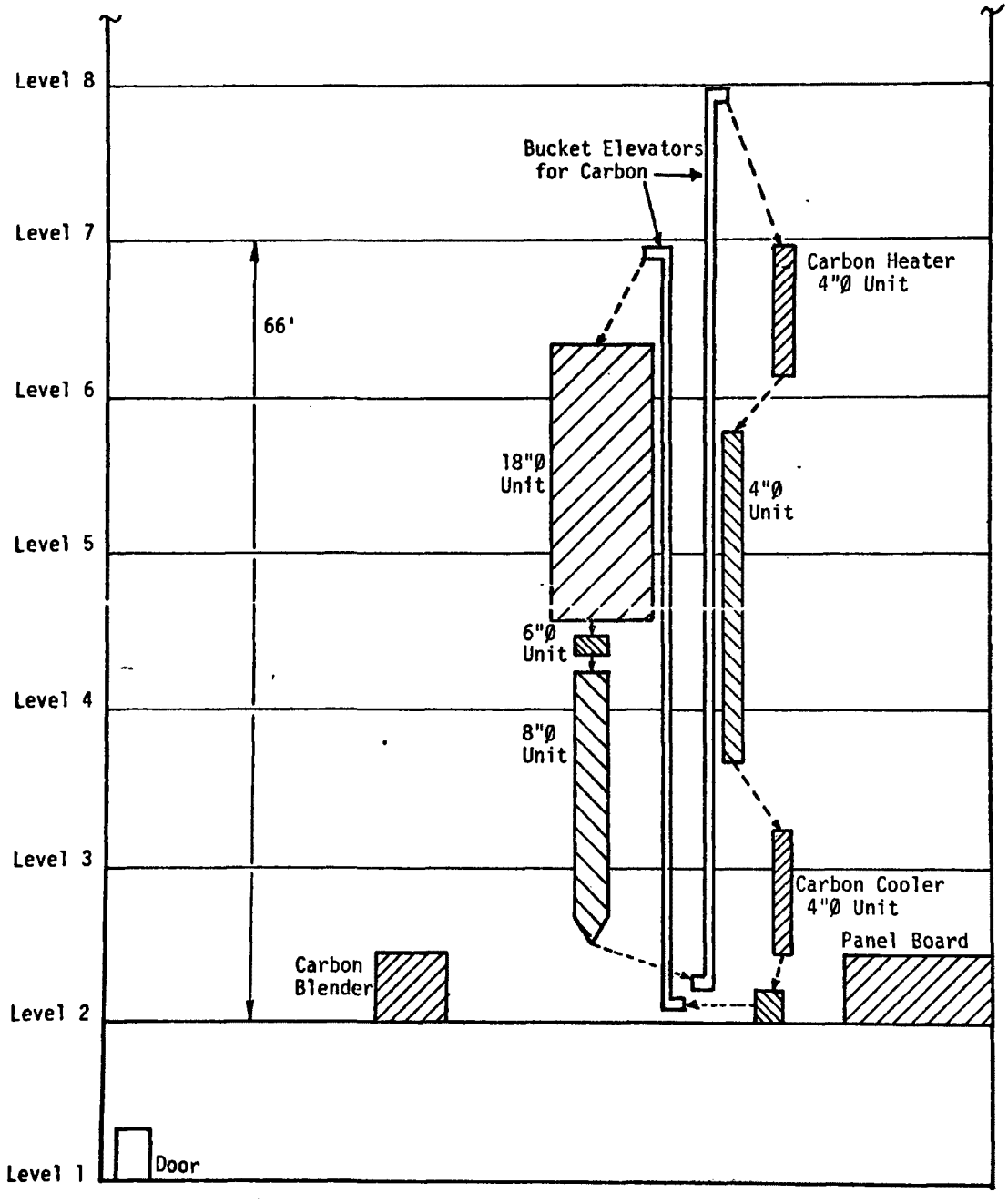

WESTVACO SO_2 PILOT PLANT

LOCATIONS OF MANUAL ALARMS AND EMERGENCY EQUIPMENT

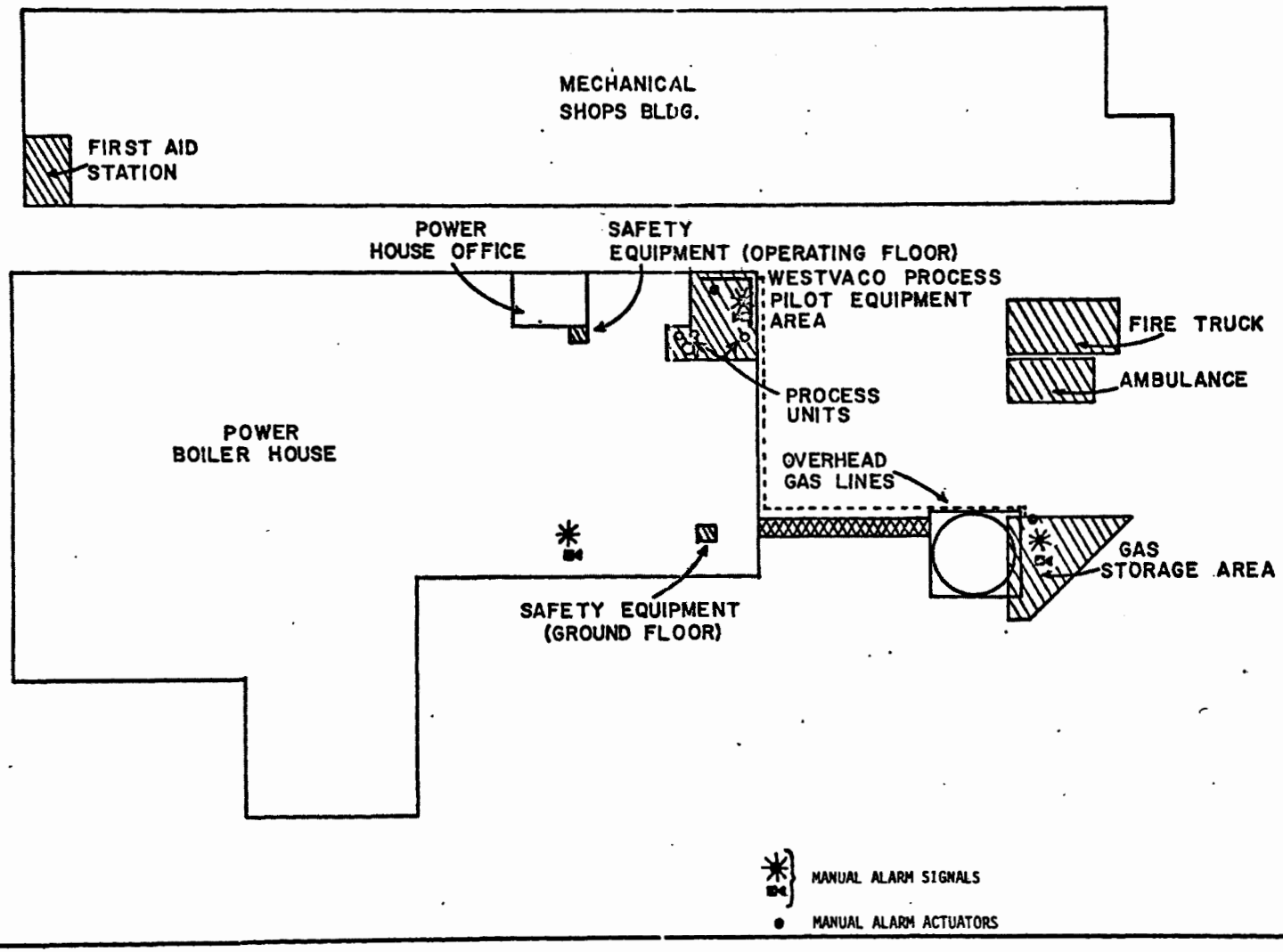

APPENDIX B-4-2

BLOCK FLOWSHEETS

(This page intentionally blank.)

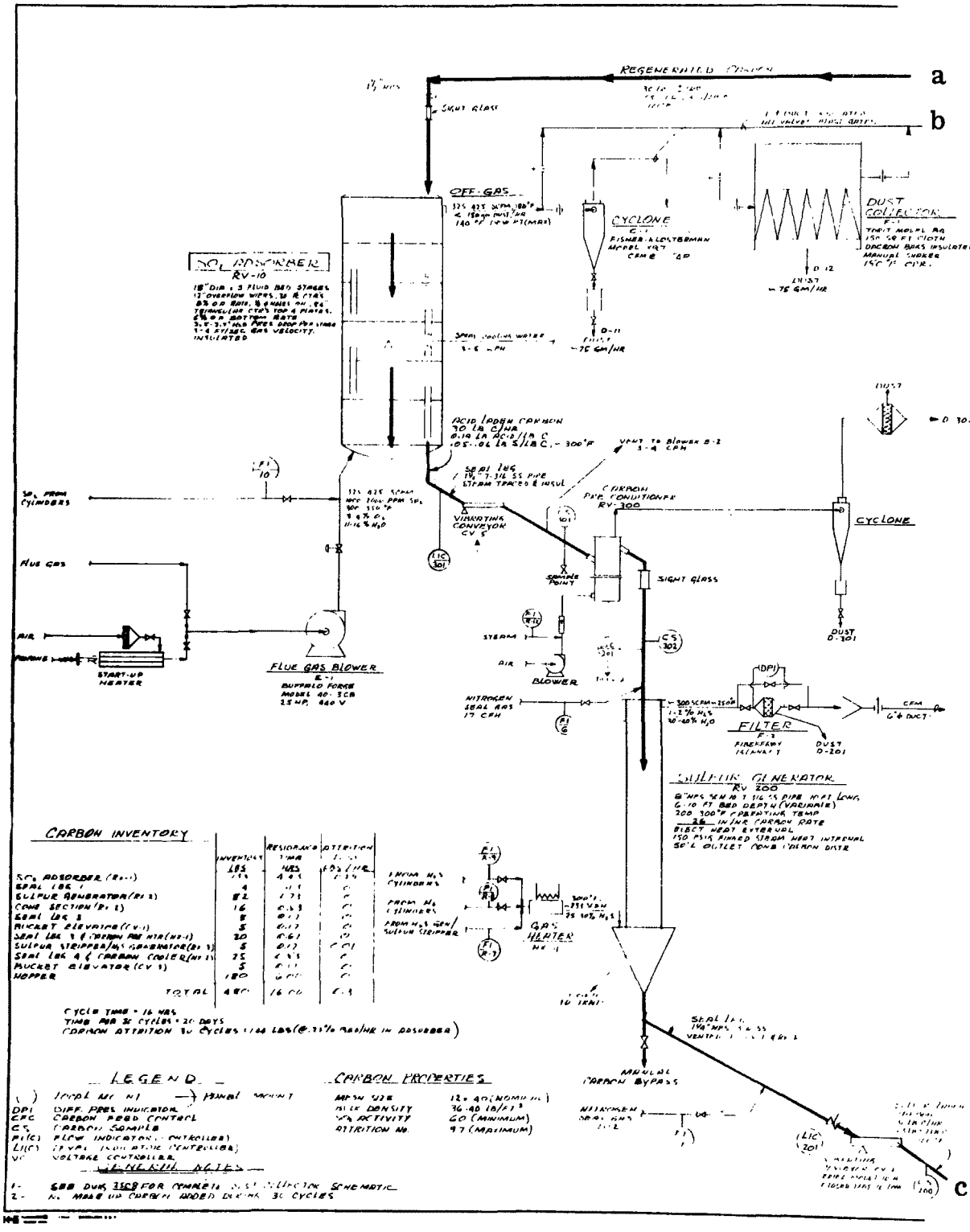
a
b
c
SIGHT GLASS
OFF-GAS
CYCLONE
DUST COLLECTOR
SO2 ABSORBER
RV-10
ACID LADEN CARBON
VIBRATING CONVEYOR
CARBON PRE CONDITIONER
RV-300
CYCLONE
SIGHT GLASS
SO2 FROM CYLINDERS
FLUE GAS
AIR
START-UP HEATER
FLUE GAS BLOWER
BLOWER
STEAM
AIR
NITROGEN SEAL GAS
FILTER
SULFUR GENERATOR
RV 200
GAS HEATER
MANUAL CARBON BYPASS
CARBON INVENTORY
LEGEND
CARBON PROPERTIES
DPI DIFF. PRES. INDICATOR
CFC CARBON FEED CONTROL
CS CARBON SAMPLE
FI(C) FLOW INDICATOR (CONTROLLER)
LI(C) LEVEL INDICATOR (CONTROLLER)
VC VOLTAGE CONTROLLER
MESH SIZE 12 x 40 (NOMINAL)
BULK DENSITY 36-40 LB/FT³
% ACTIVITY 60 (MINIMUM)
ATTRITION NO. 97 (MAXIMUM)

Mechanical Integration, 20,000 CFH SO_2 Pilot Plant Process Flowsheet

Dwg. 2507

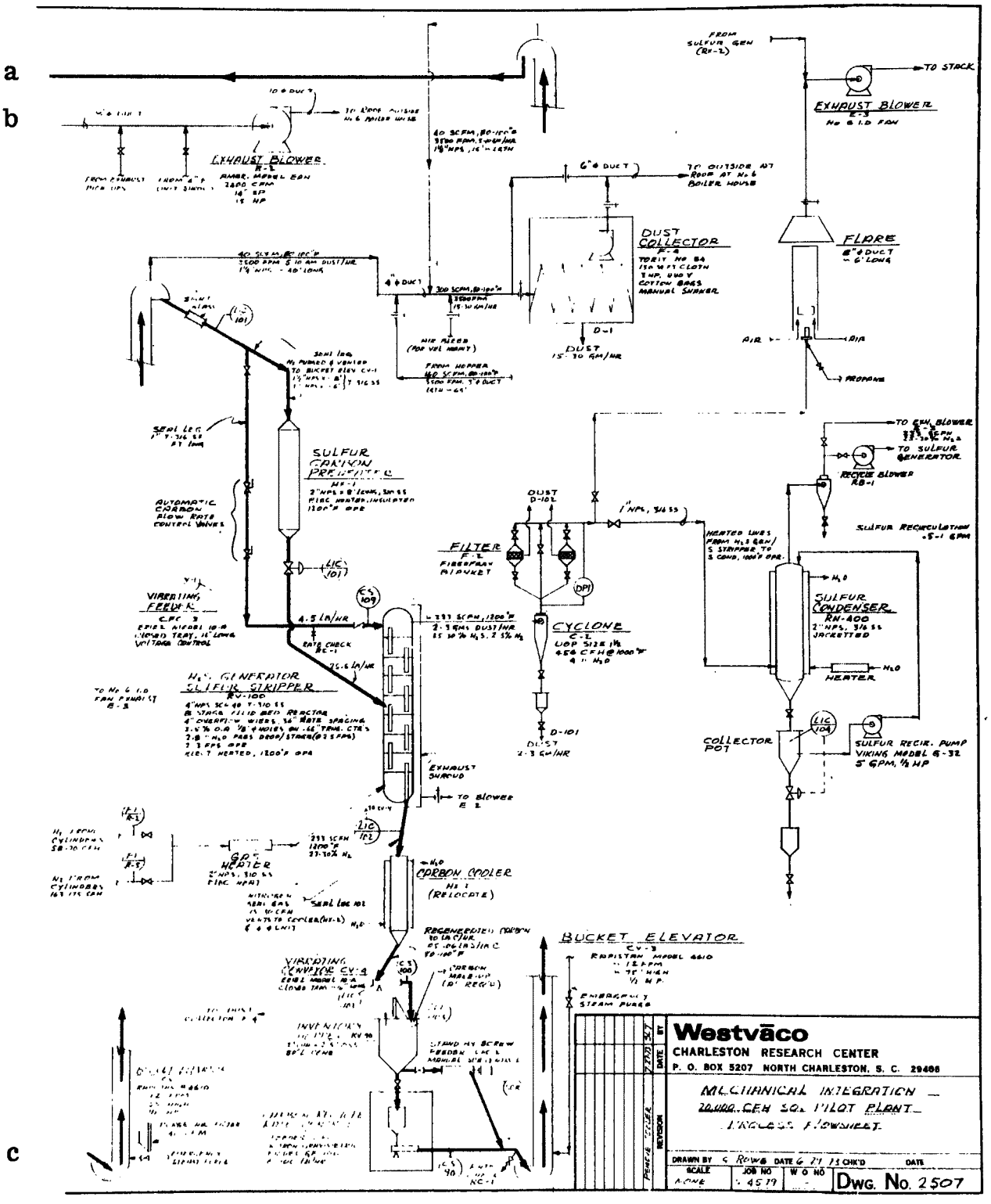

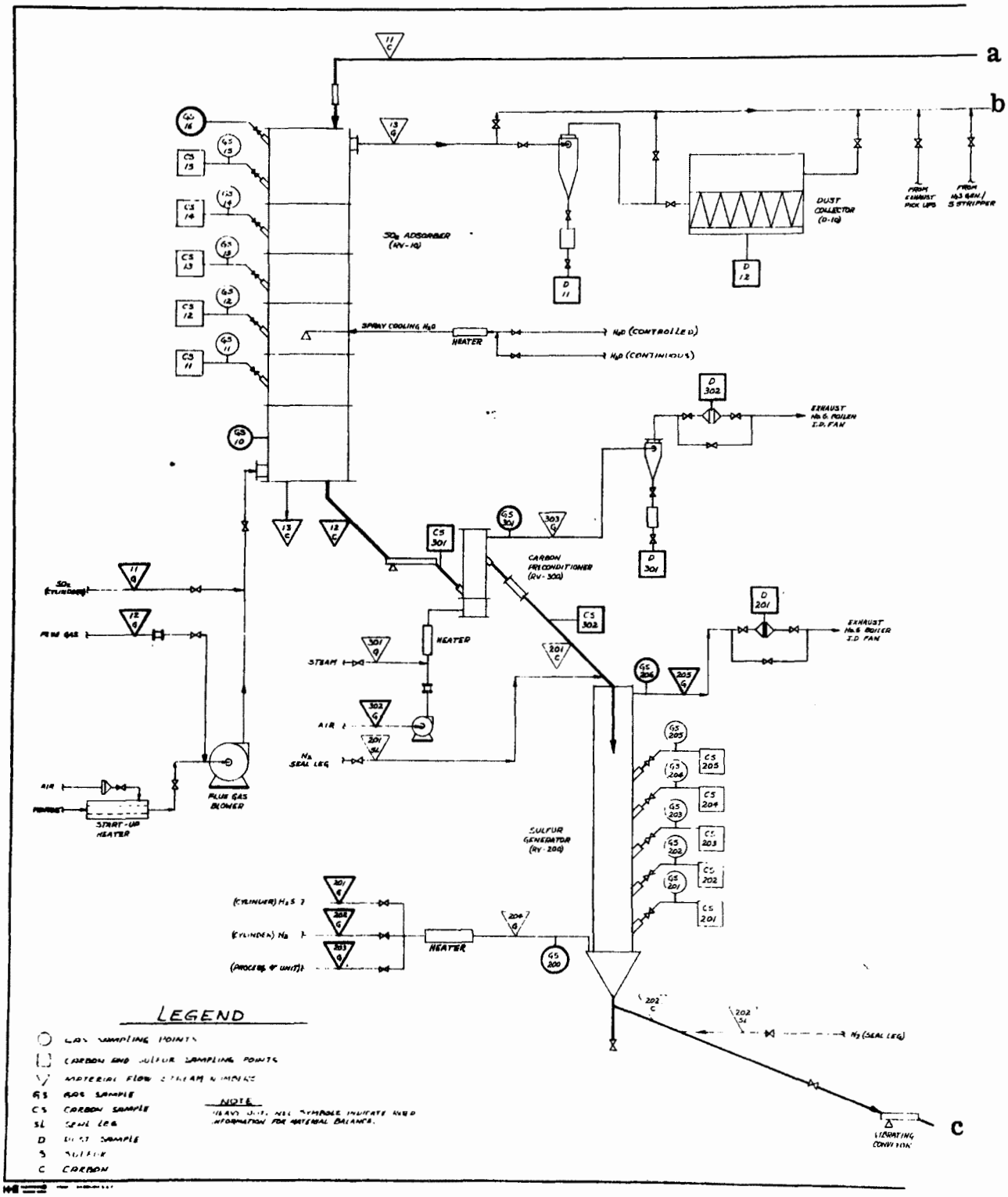
a
b
c
SO2 ADSORBER (RV-10)
DUST COLLECTOR (D-10)
FROM EXHAUST FACK UPS
FROM H2S GEN./ S STRIPPER
SPRAY COOLING H2O
HEATER
H2O (CONTROLLED)
H2O (CONTINUOUS)
EXHAUST No.6 BOILER I.D. FAN
CARBON PRECONDITIONER (RV-300)
STEAM
AIR
N2 SEAL LEG
FLUE GAS BLOWER
START-UP HEATER
SULFUR GENERATOR (RV-200)
(CYLINDER) H2S
(CYLINDER) N2
(PROCESS OF UNIT)
VIBRATING CONVEYOR
LEGEND
GAS SAMPLING POINTS
CARBON AND SULFUR SAMPLING POINTS
MATERIAL FLOW STREAM NUMBERS
GS GAS SAMPLE
CS CARBON SAMPLE
SL SEAL LEG
D DUST SAMPLE
S SULFUR
C CARBON
NOTE
HEAVY DOTS AND SYMBOLS INDICATE NEED INFORMATION FOR MATERIAL BALANCE.

Material Flow Streams and Sample Ports

Dwg. 2529

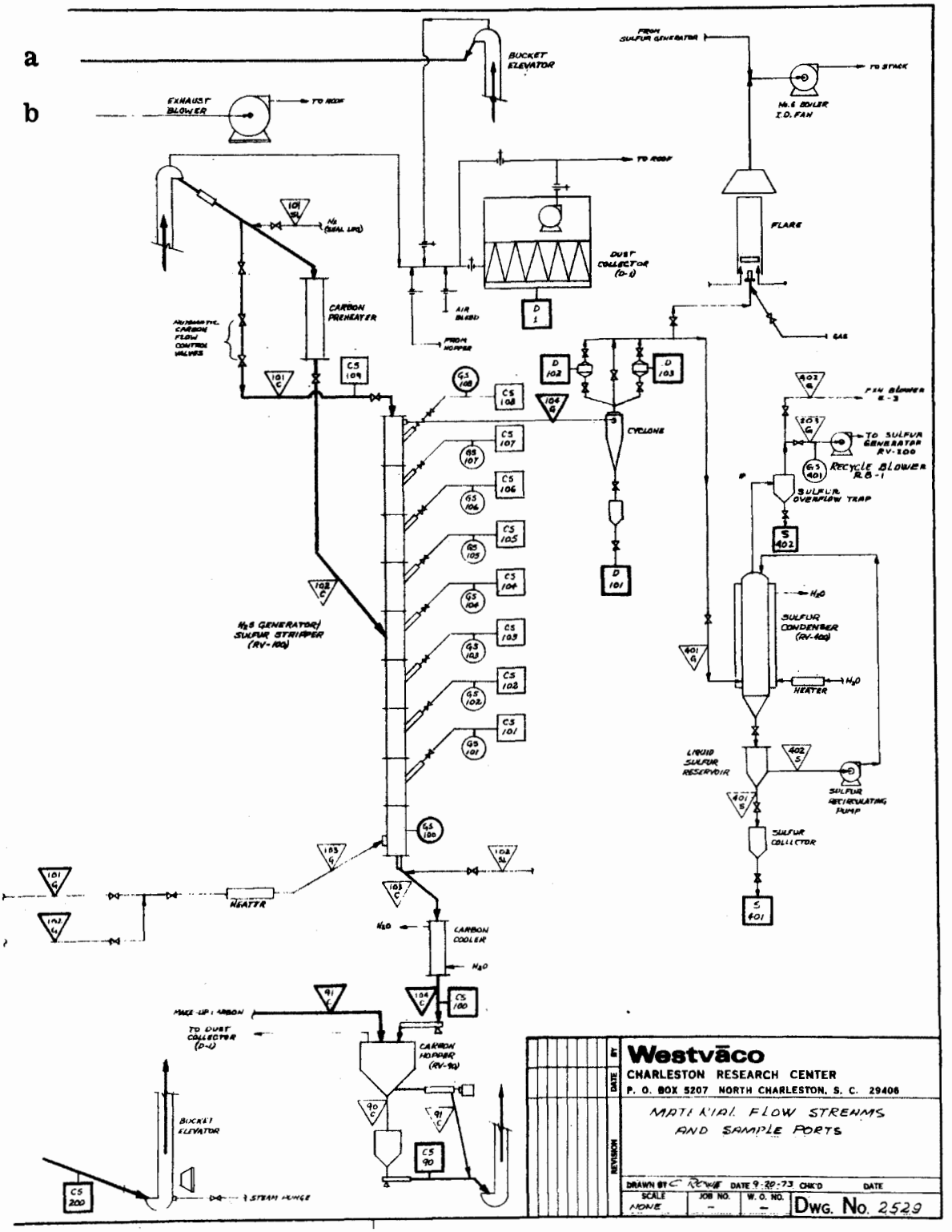

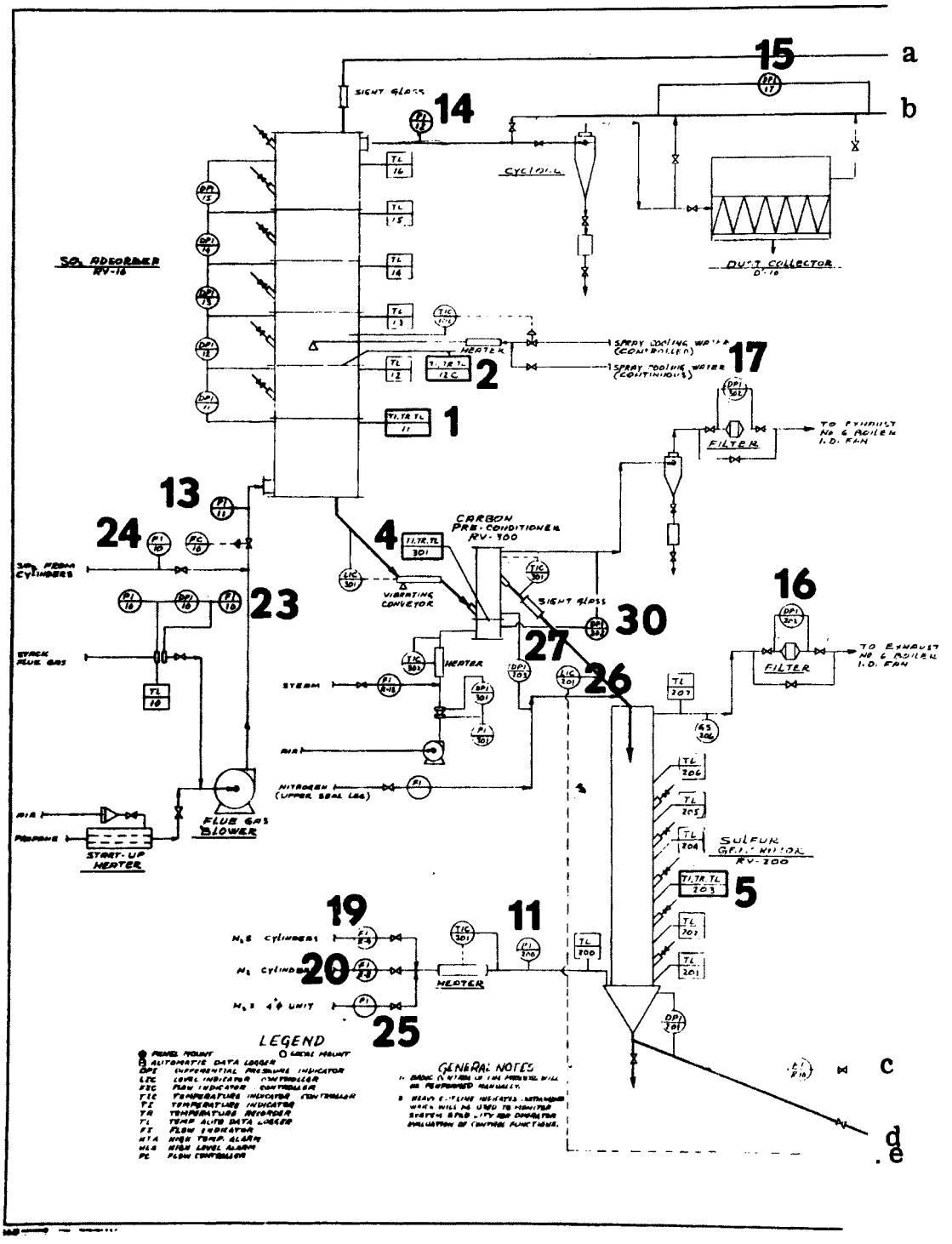
a
b
c
d
e
15
14
2
1
17
13
24
4
23
30
27
26
16
19
20
25
11
5
SIGHT GLASS
CYCLONE
DUST COLLECTOR
SO2 ADSORBER
RV-16
SPRAY COOLING WATER (CONTROLLED)
SPRAY COOLING WATER (CONTINUOUS)
HEATER
FILTER
TO EXHAUST NO 6 BOILER I.D. FAN
CARBON PRE-CONDITIONER RV-300
VIBRATING CONVEYOR
SO2 FROM CYLINDERS
STACK FLUE GAS
STEAM
AIR
NITROGEN (UPPER SEAL LEG)
FLUE GAS BLOWER
START-UP HEATER
PROPANE
SULFUR GETTER RV-200
H2S CYLINDERS
H2 CYLINDERS
H2S 4% UNIT
LEGEND
GENERAL NOTES

Instrumentation for Integrated
SO_2 Recovery Process

Dwg. 2528A

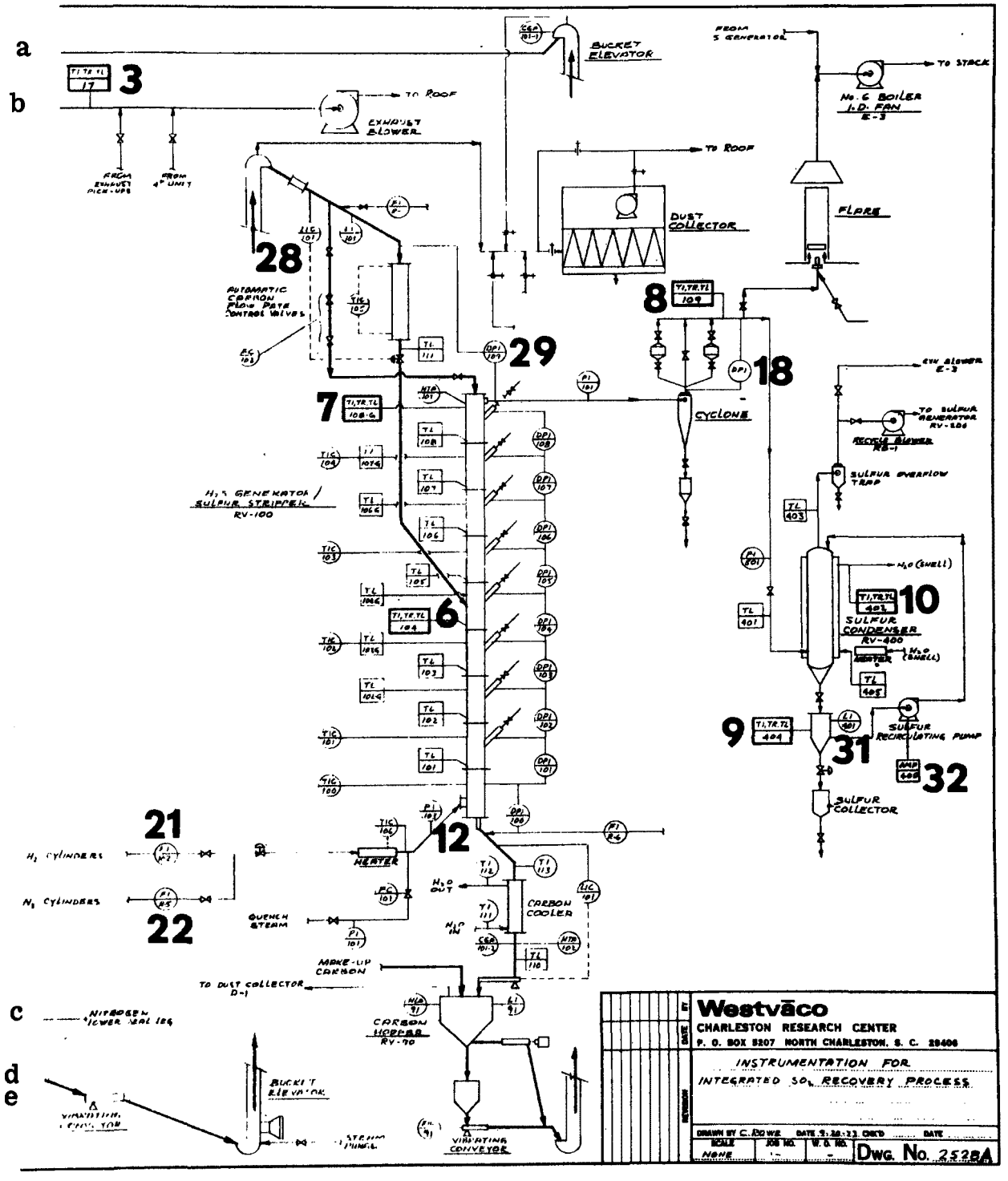

18" Ø SO_2 SORBER

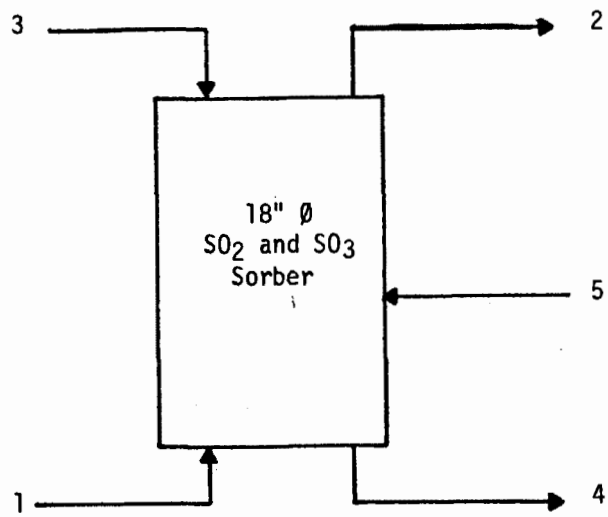

STREAM	IDENTIFICATION	COMPOSITION	FLOW RATE	TEMPERATURE, °F
1	Flue Gas	1100 ppm SO_2* 4 vol. % O_2 15 vol. % H_2O 150 ppm NO 11 vol. % CO_2 Bal. N_2	160-300 CFM @ 70°F	300 - 350
2	Flue Gas	110 ppm SO_2** [Balance Same as Above]	180-320 CFM @ 70°F	150 - 220
3	Sulfur Free Activated Carbon	2% Elem. S	13 - 25 lbs./hr.	Room Temperature

*Normal Stack Conditions
**Minimum SO_2 Outlet Composition

STREAM	IDENTIFICATION	COMPOSITION	FLOW RATE	TEMPERATURE, °F
4	Sulfuric Acid Loaded Carbon	0.184 # H_2SO_4/# C 4 Wt. % H_2O Balance Carbon	16 - 30 Total #/hr.	70 - 100
5	Hot Water	100% H_2O	60 #/hr.	150

WATER SPRAY SYSTEM FOR 18"Ø SO_2 SORBER

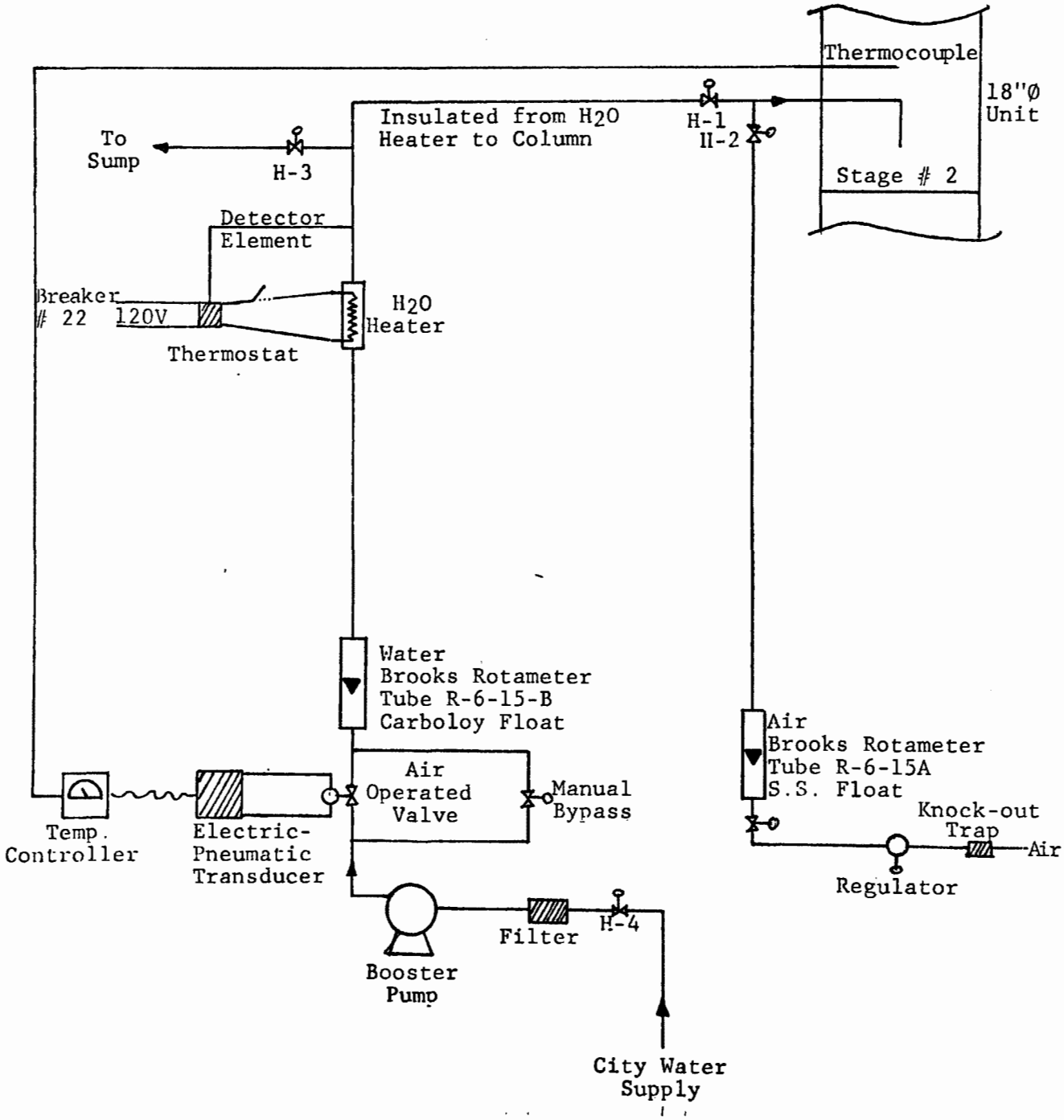

SCHEMATIC OF H_2O SPRAY SYSTEM

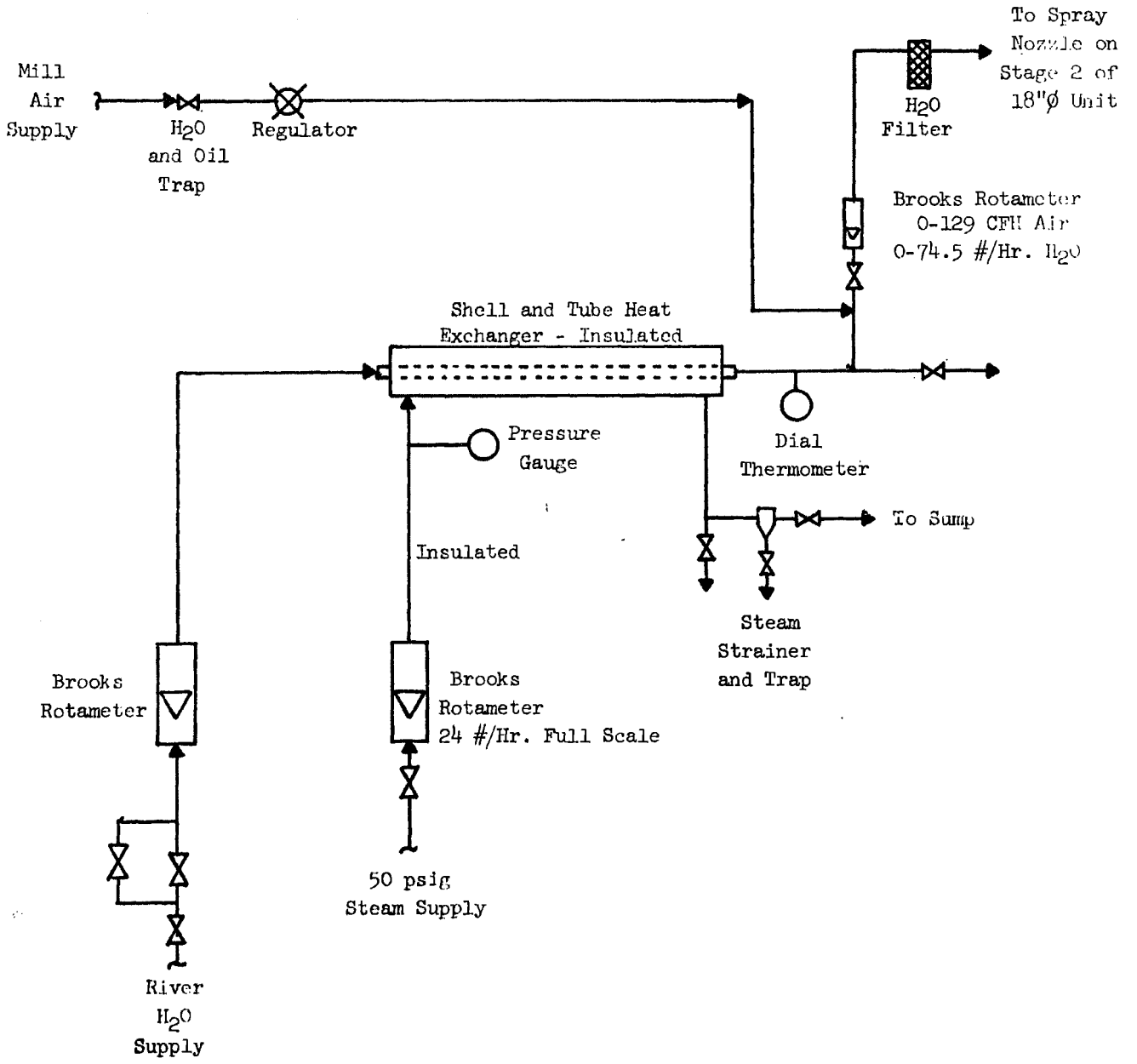

4" ϕ REGENERATOR

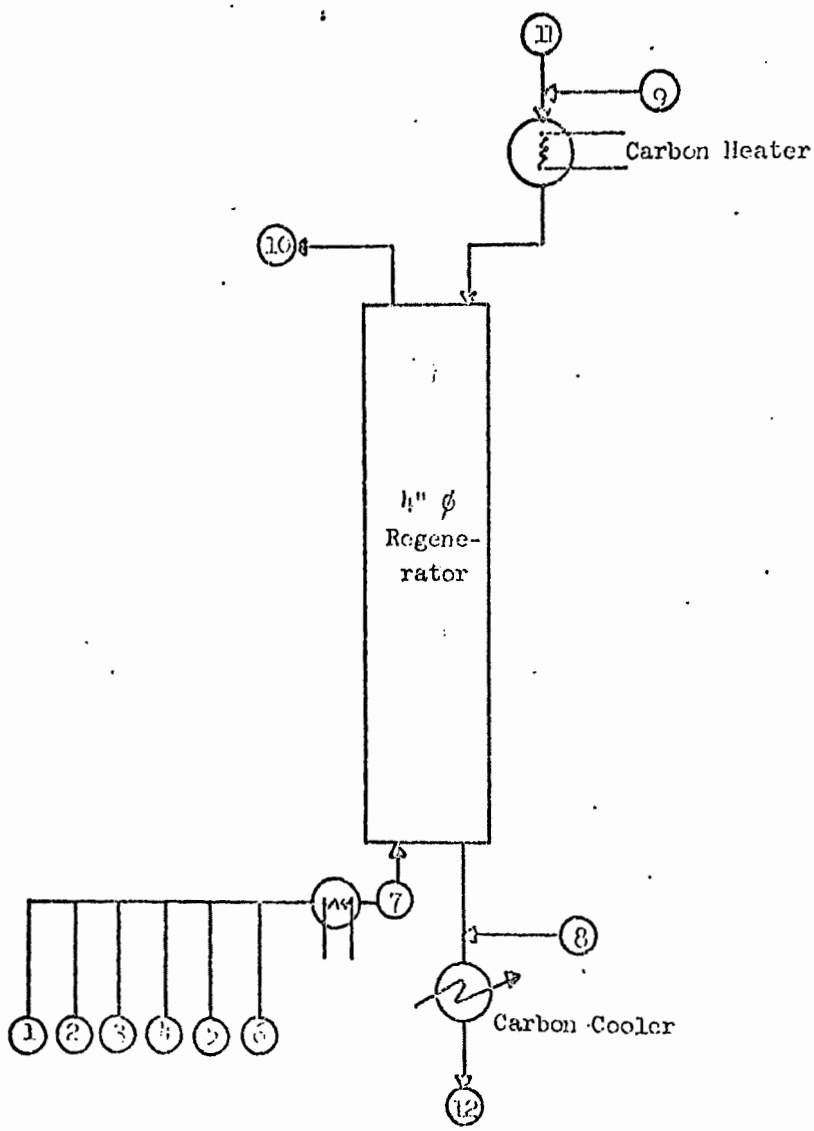

STREAM	IDENTIFICATION	COMPOSITION	FLOW RATE	TEMPERATURE, °F
1	Nitrogen	Pure	0-640 CFH @ 70°F*	Room Temp. - 1000
2	Hydrogen Sulfide	Pure	0-400 CFH @ 70°F	Room Temp. - 350

*At atmospheric pressure. As the pressure increases at the rotameter outlet the flow increases by a factor of $\sqrt{\frac{P + 14.7}{13.9}}$.

STREAM	IDENTIFICATION	COMPOSITION	FLOW RATE	TEMPERATURE, °F
3	Steam	Pure	0-400 CFH @ 70°F (0-20 lbs./hr.)	230-1000
4	Hydrogen	Pure	0-300 CFH @ 70°F	800-1000
5	Carbon Monoxide	Pure	0-100 CFH @ 70°F	Room Temp.-1000
6	Carbon Dioxide	Pure	0-100 CFH @ 70°F	Room Temp.-1000
7	Inlet Gas	Note*	0-640 CFH @ 70°F	Room Temp.-1000
8	Lower Carbon Seal Leg Nitrogen	Pure	35 CFH @ 70°F	Room Temp.
9	Upper Carbon Seal Leg Nitrogen	Pure	25 CFH @ 70°F	Room Temp.
10	Off Gas	Note**	0-740 CFH @ 70°F	Room Temp.-1000
11	Inlet Carbon	Note***	0-50 lbs./hr.	Room Temp.-1000
12	Outlet Carbon	Note****	0-50 lbs./hr.	Room Temp.-1000

*Contains H_2S + Inerts for Sulfur Generation
Contains Inerts for Sulfur Stripping
Contains H_2 + Inerts for H_2S Generation

**Contains Steam (H_2S, SO_2 Possible); S; H_2S (H_2, S Possible) for each of the above operations, respectively.

***Contains H_2SO_4 or S.

****Contains S (from Sulfur Generation) or Very Low Sulfur (H_2S Generation or Sulfur Stripping)

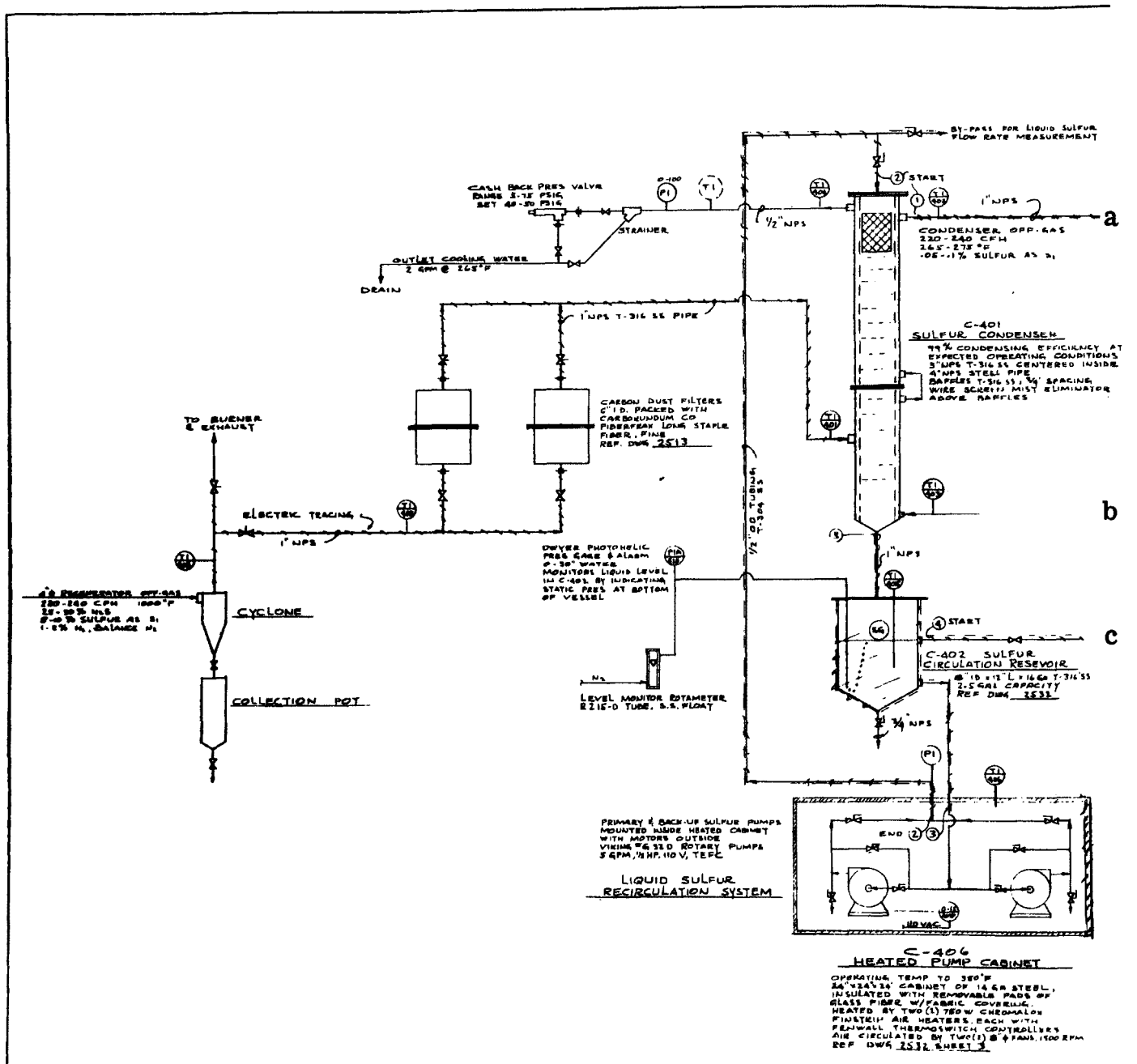
BY-PASS FOR LIQUID SULFUR FLOW RATE MEASUREMENT
START
1" NPS
a
CONDENSER OFF-GAS
220-240 CFM
265-275 °F
.05-.1% SULFUR AS S2
CASH BACK PRES VALVE
RANGE 3-15 PSIG
SET 40-50 PSIG
STRAINER
1/2" NPS
OUTLET COOLING WATER
2 GPM @ 265°F
DRAIN
1" NPS T-316 SS PIPE
C-401
SULFUR CONDENSER
99% CONDENSING EFFICIENCY AT EXPECTED OPERATING CONDITIONS
3" NPS T-316 SS CENTERED INSIDE 4" NPS STEEL PIPE
BAFFLES T-316 SS, 3/8" SPACING
WIRE SCREEN MIST ELIMINATOR ABOVE BAFFLES
CARBON DUST FILTERS
6" I.D. PACKED WITH CARBORUNDUM CO FIBERFRAX LONG STAPLE FIBER, FINE
REF. DWG 2513
TO BURNER & EXHAUST
ELECTRIC TRACING
1" NPS
1/2" OD TUBING T-304 SS
b
DWYER PHOTOHELIC PRES GAGE & ALARM 0-30" WATER
MONITORS LIQUID LEVEL IN C-402, BY INDICATING STATIC PRES AT BOTTOM OF VESSEL
1" NPS
CYCLONE
START
c
C-402 SULFUR CIRCULATION RESEVOIR
8" ID x 12" L x 16 GA T-316 SS
2.5 GAL CAPACITY
REF DWG 2532
LEVEL MONITOR ROTAMETER
RZ 15-D TUBE, S.S. FLOAT
3/4" NPS
COLLECTION POT
PRIMARY & BACK-UP SULFUR PUMPS MOUNTED INSIDE HEATED CABINET WITH MOTORS OUTSIDE
VIKING #G 32 D ROTARY PUMPS
5 GPM, 1/3 HP, 110 V, TEFC
LIQUID SULFUR RECIRCULATION SYSTEM
END
110 VAC
C-406
HEATED PUMP CABINET
OPERATING TEMP TO 350°F
24"x24"x24" CABINET OF 14 GA STEEL, INSULATED WITH REMOVABLE PADS OF GLASS FIBER W/FABRIC COVERING.
HEATED BY TWO (1) 750 W CHROMALOX FINSTRIP AIR HEATERS, EACH WITH FENWALL THERMOSWITCH CONTROLLERS
AIR CIRCULATED BY TWO (2) 8" φ FANS, 1500 RPM
REF DWG 2532, SHEET 3

Sulfur Condensing System for
SO_2 Recovery Pilot Plant

Dwg. 2537

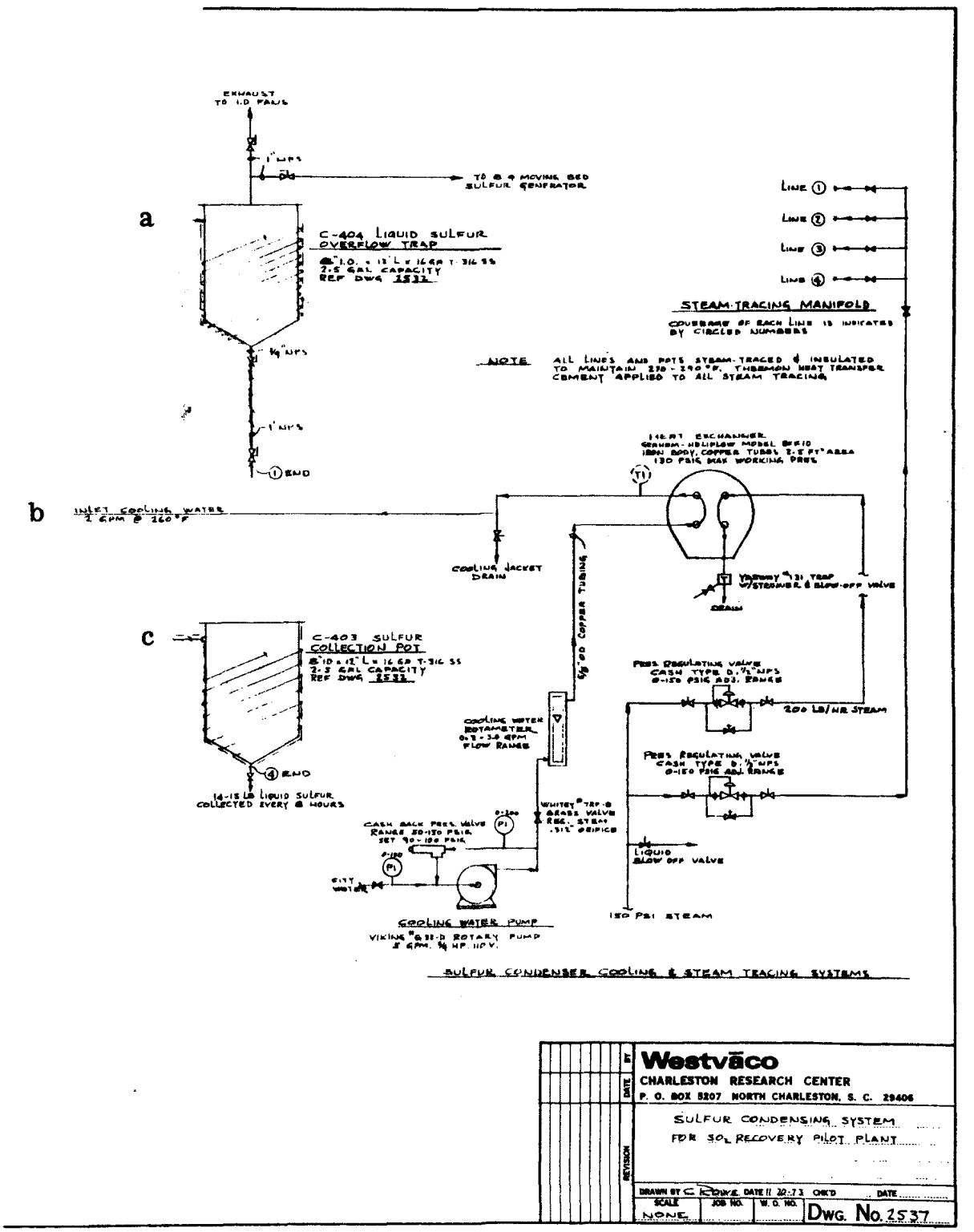

APPENDIX B-4-3

EQUIPMENT SCHEMATICS

SCHEMATIC OF EXHAUST LINES FOR SO_2 REMOVAL EQUIPMENT AT NO. 6 BOILER

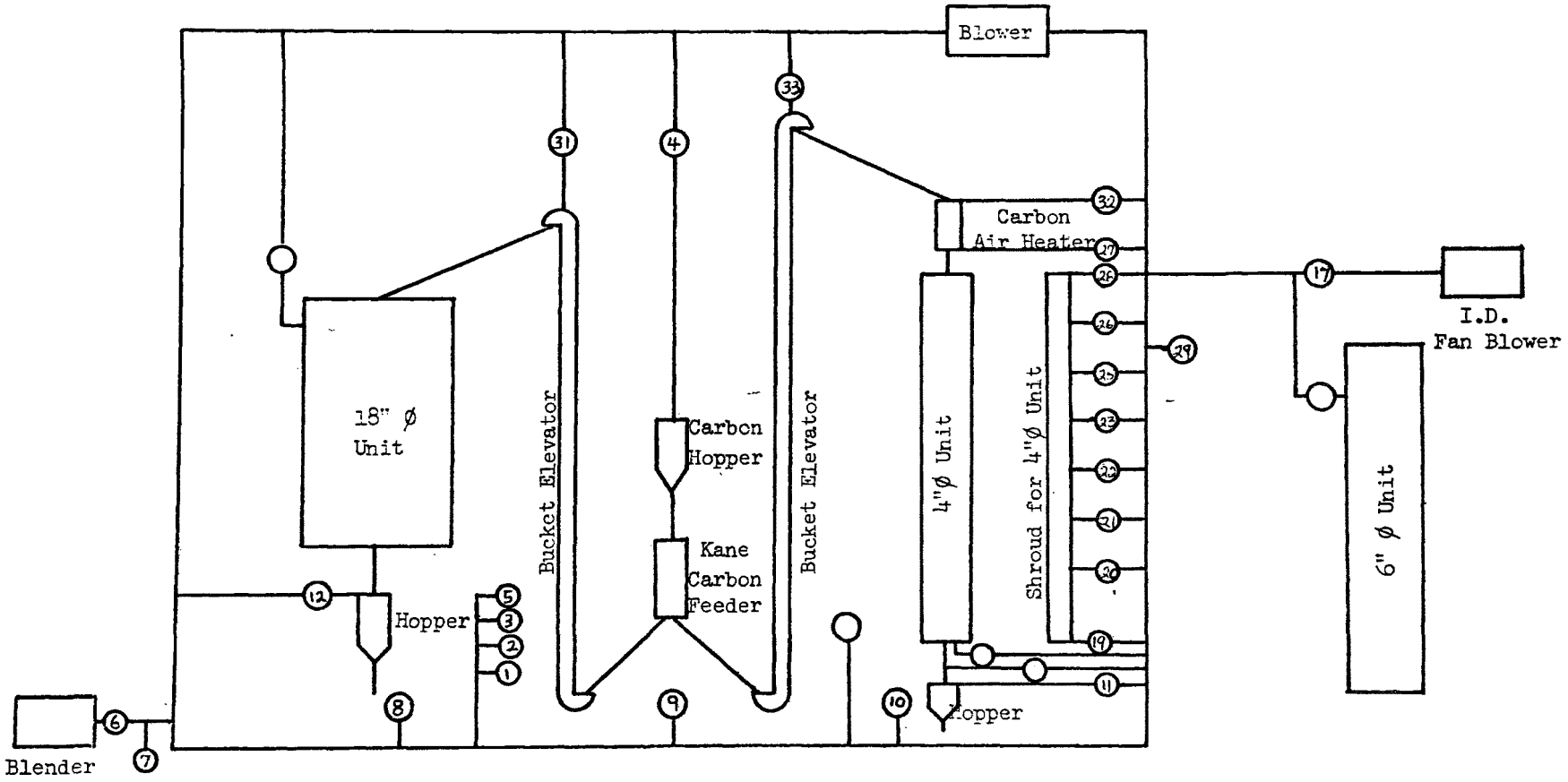

PRESSURE DROP GAUGE READING FOR 18" Ø UNIT

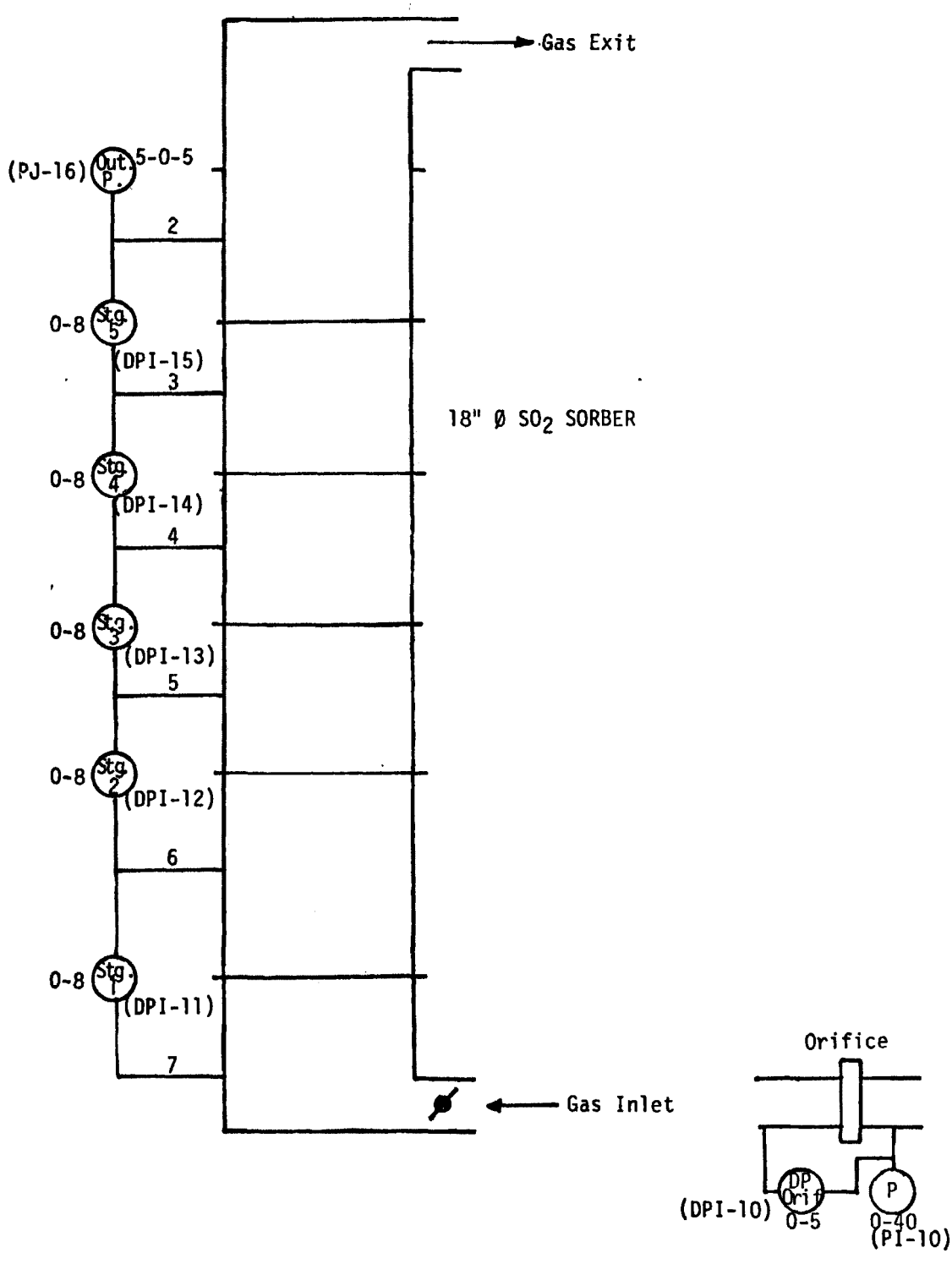

PRESSURE DROP GAUGE READING THROUGH 18" Ø UNIT

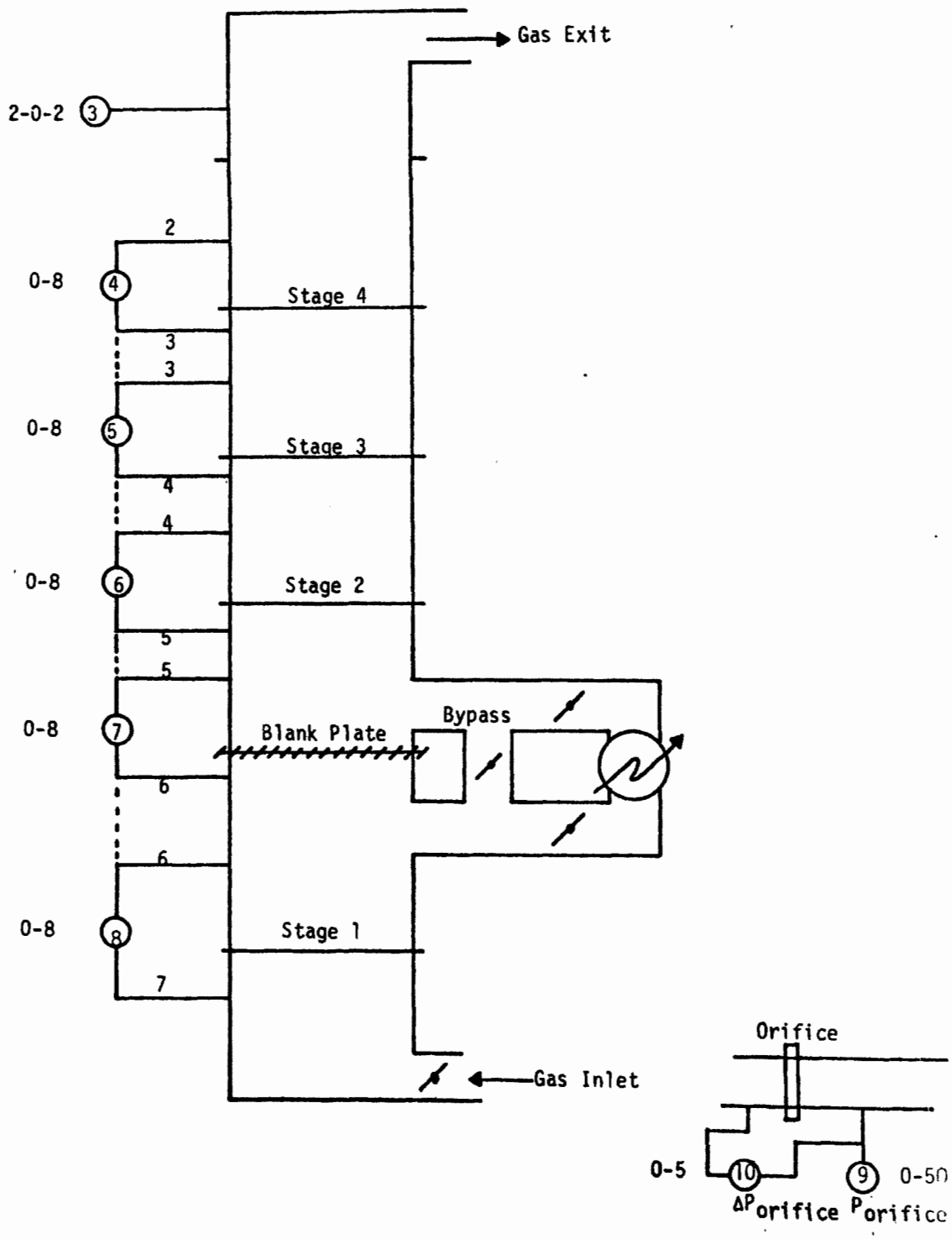

THERMOCOUPLE ARRANGEMENT FOR 18" Ø SO_2 SORBER

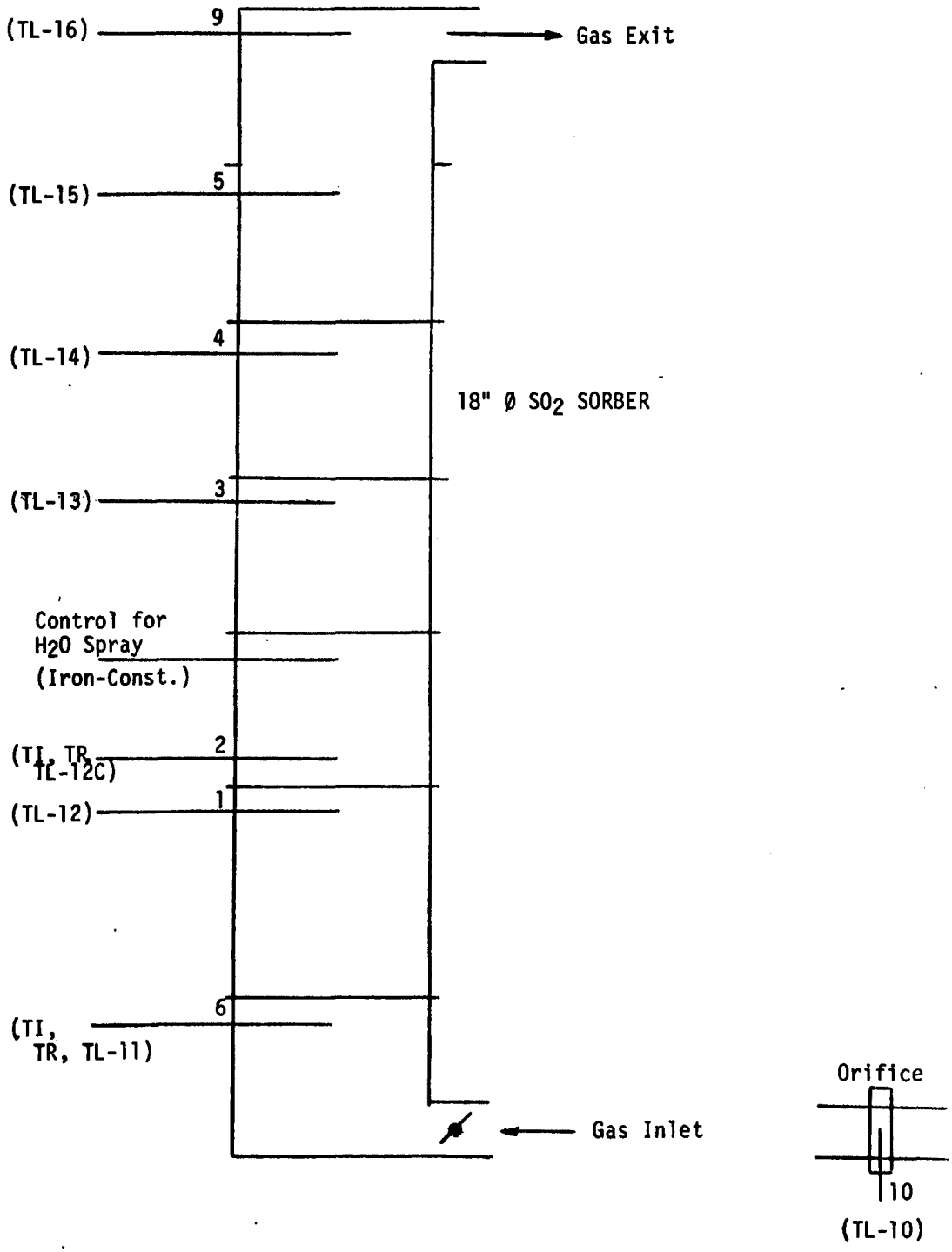

THERMOCOUPLE ARRANGEMENT FOR 18" Ø SO_2 SORBER

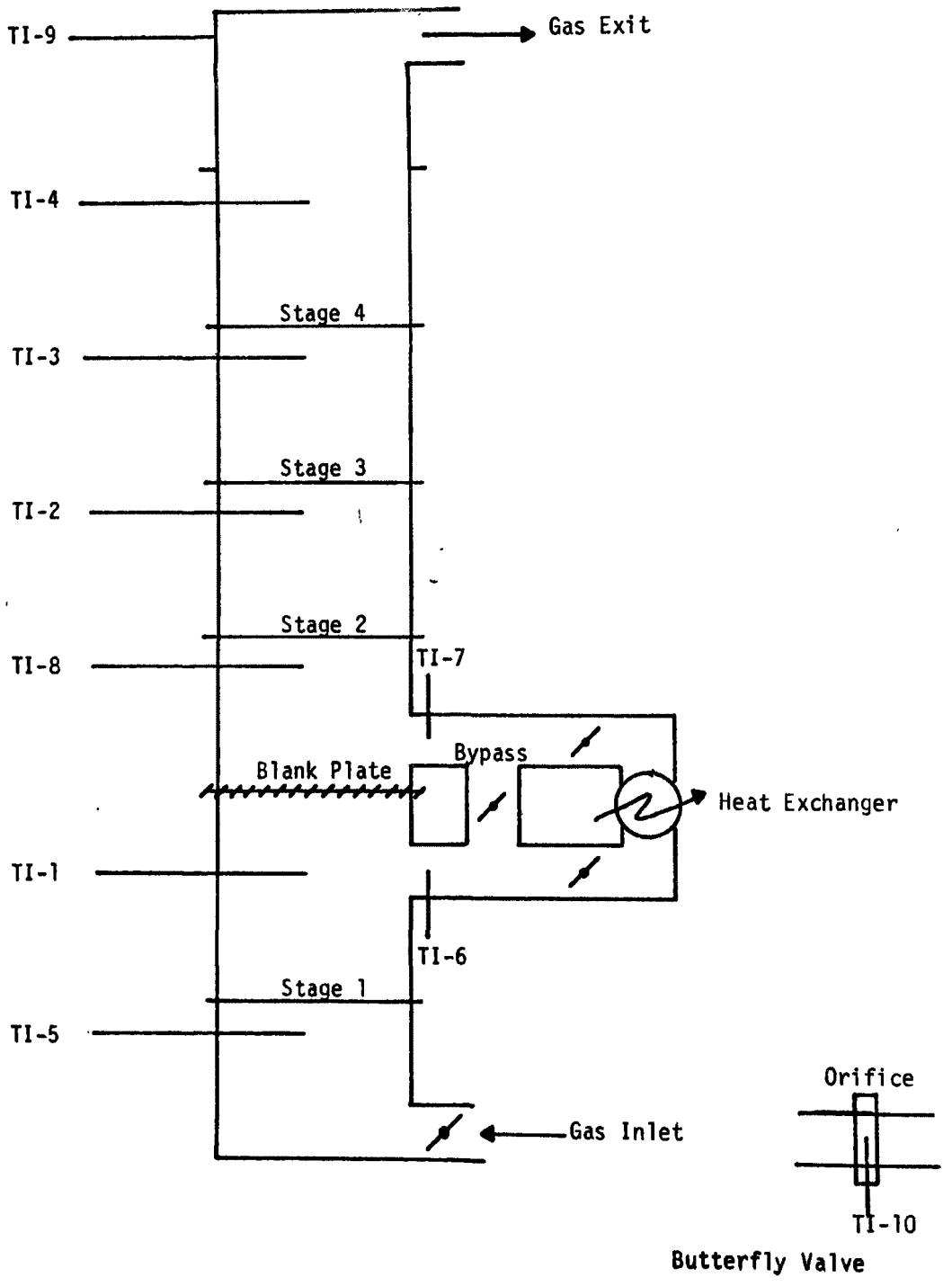

GAS SAMPLE LINE ARRANGEMENT FOR 18" Ø SO_2 SORBER

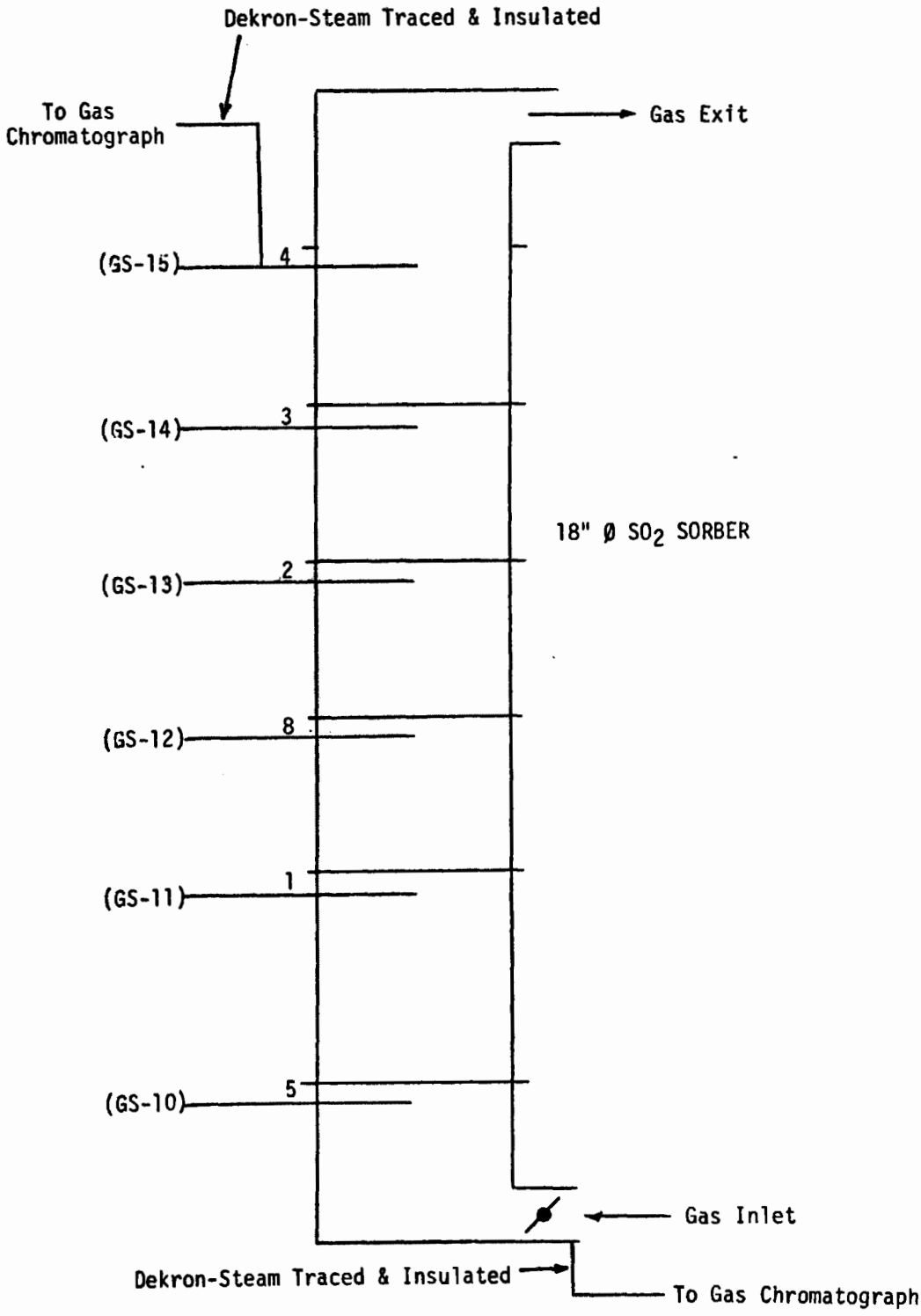

GAS SAMPLE LINE ARRANGEMENT FOR 18" Ø SO_2 SORBER

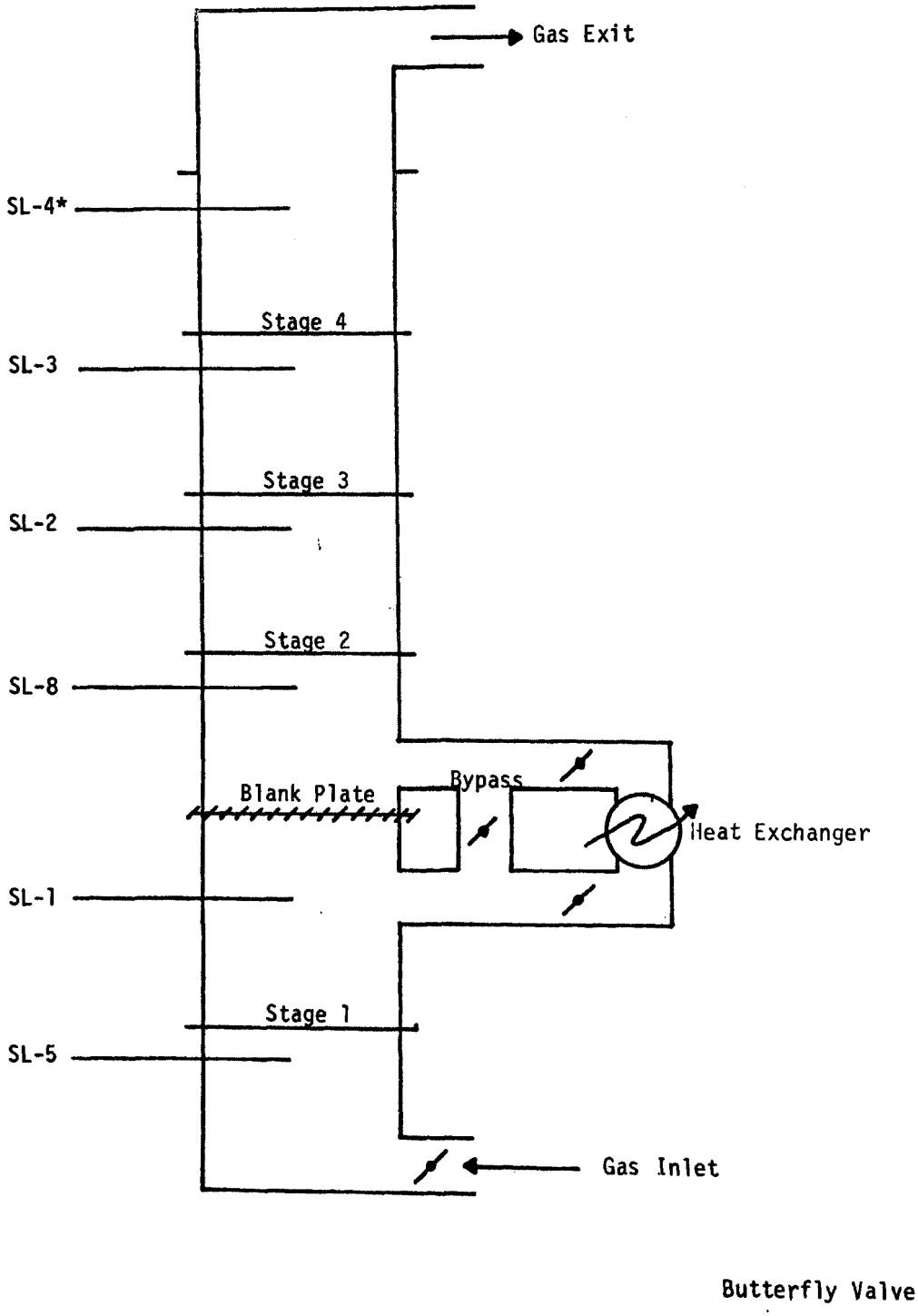

DUST COLLECTION SCHEMATIC - 18" Ø UNIT

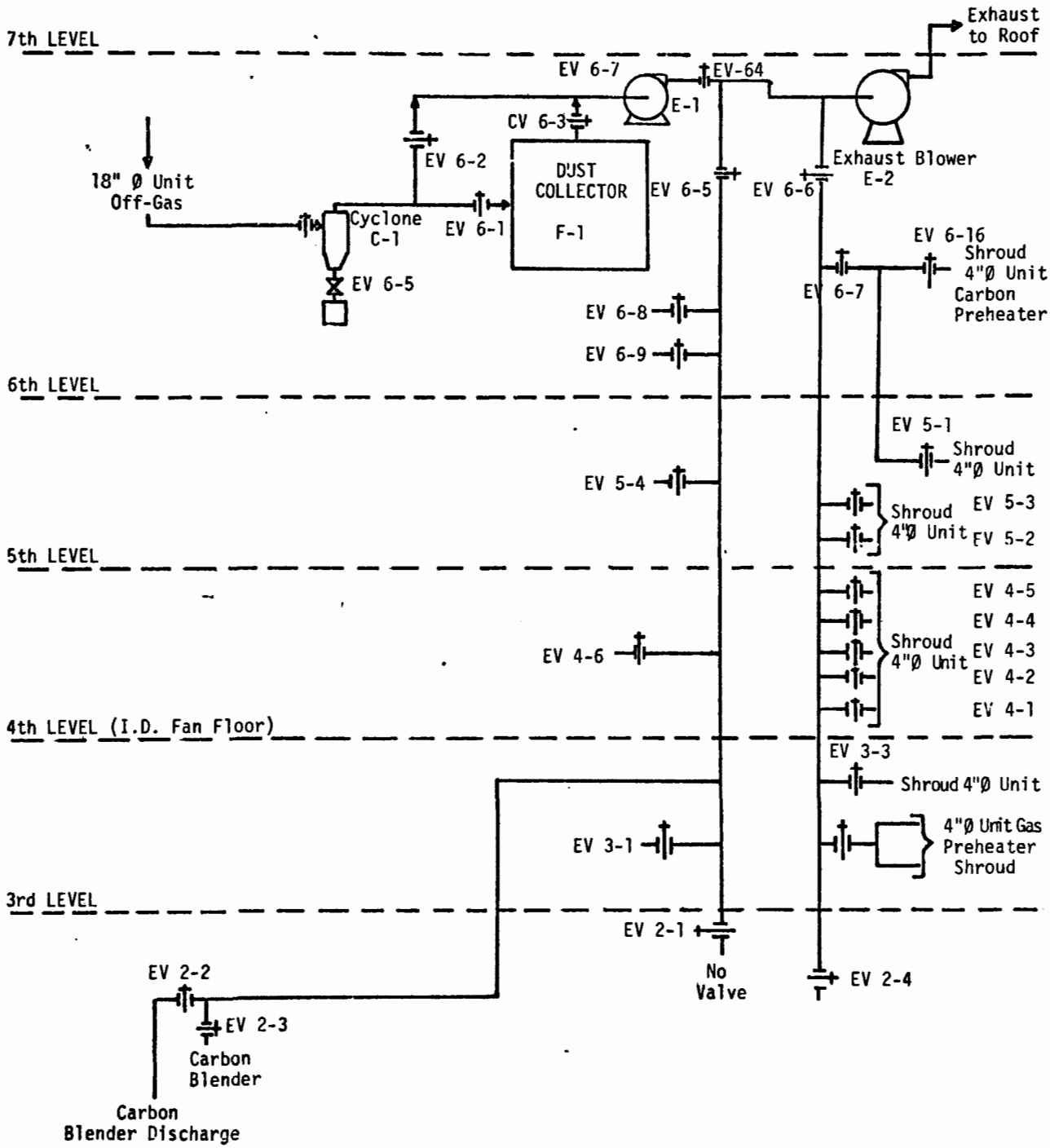

INSTRUMENTATION CONTROL SCHEMATIC FOR 8" Ø SULFUR GENERATOR

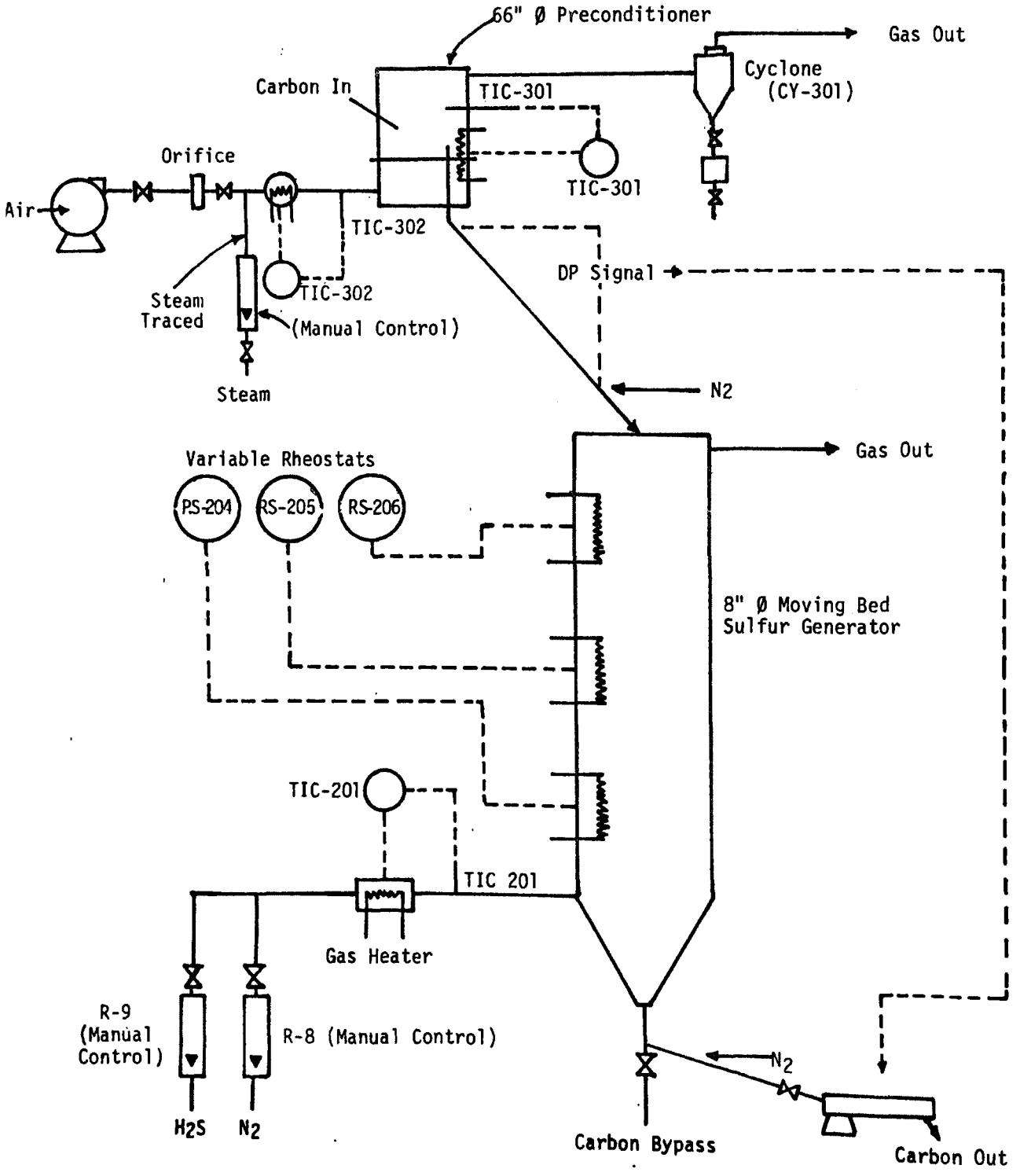

PRESSURE DROP GAUGE READINGS FOR 8" Ø SULFUR GENERATOR

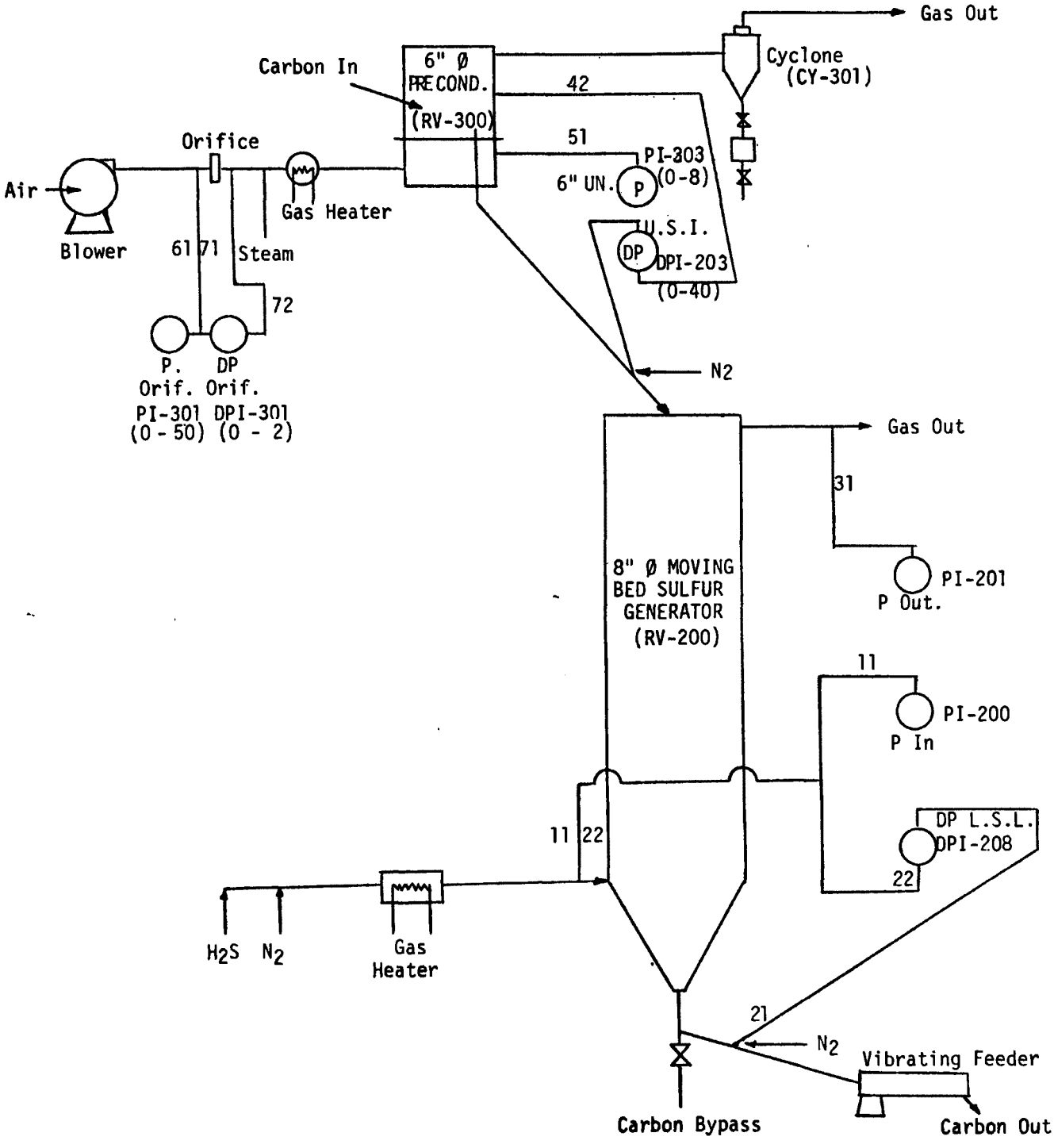

THERMOCOUPLE ARRANGEMENT FOR 8" Ø SULFUR GENERATOR

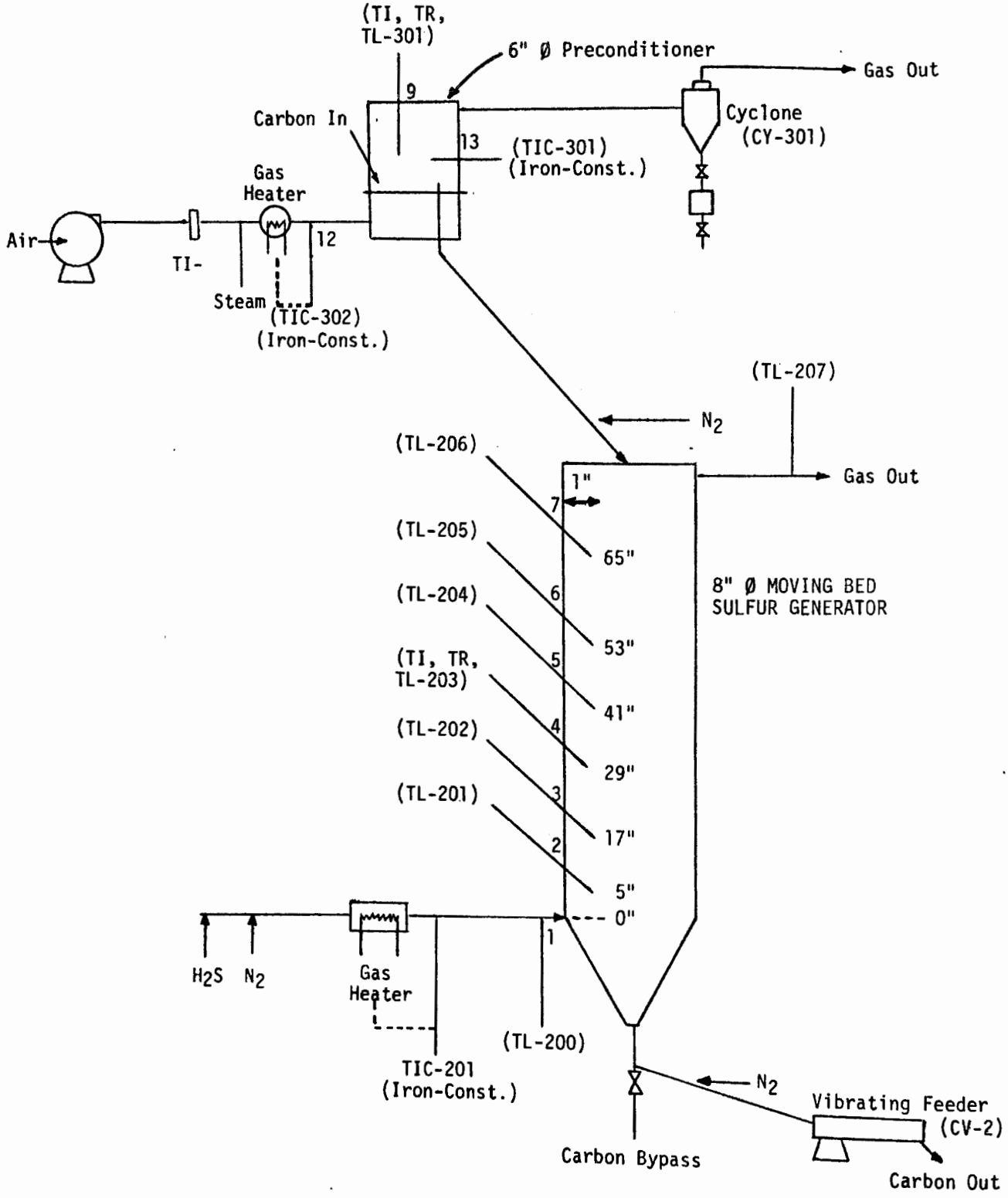

GAS SAMPLE LINE ARRANGEMENT FOR 8" Ø SULFUR GENERATOR

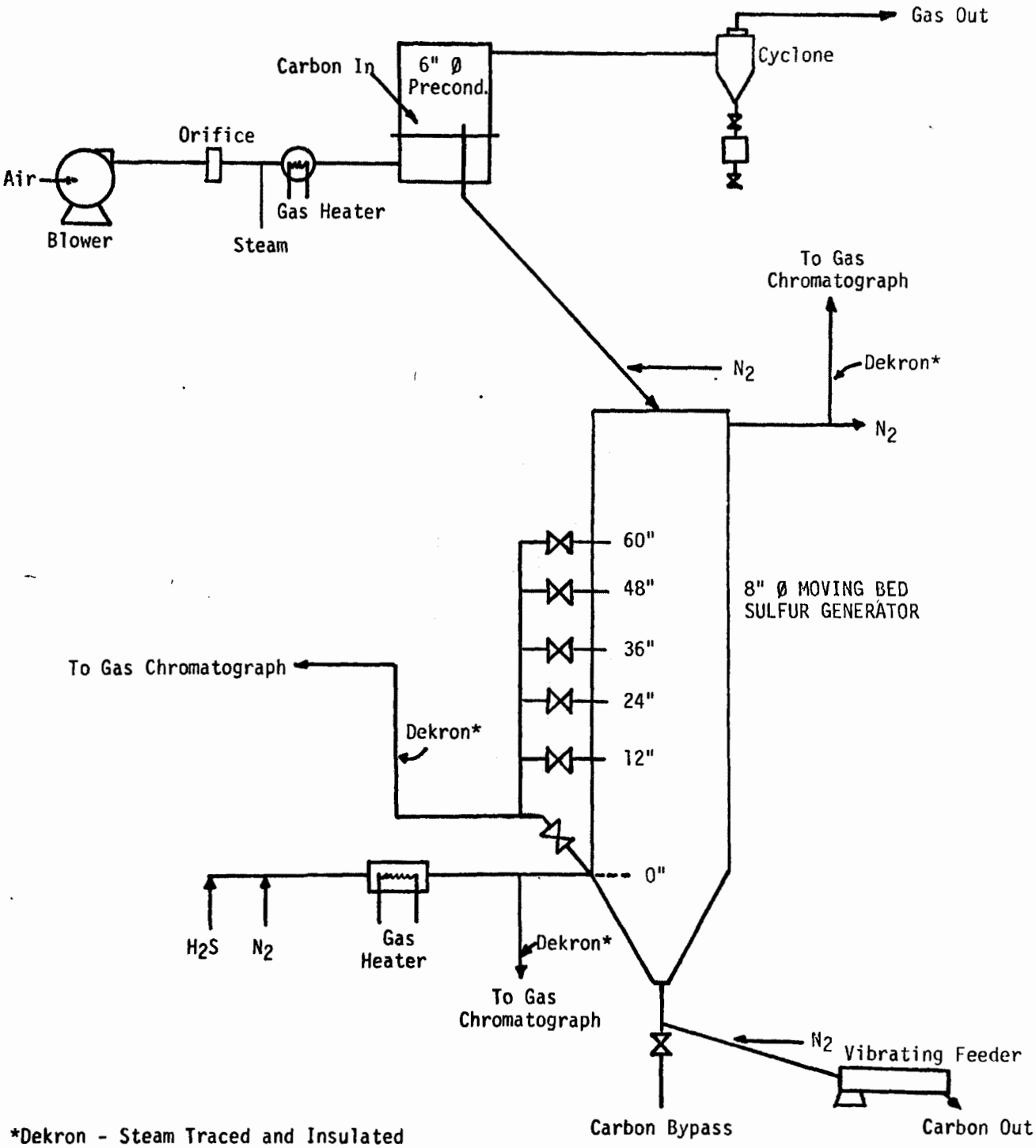

*Dekron - Steam Traced and Insulated

DUST COLLECTION SCHEMATIC - 4" Ø UNIT

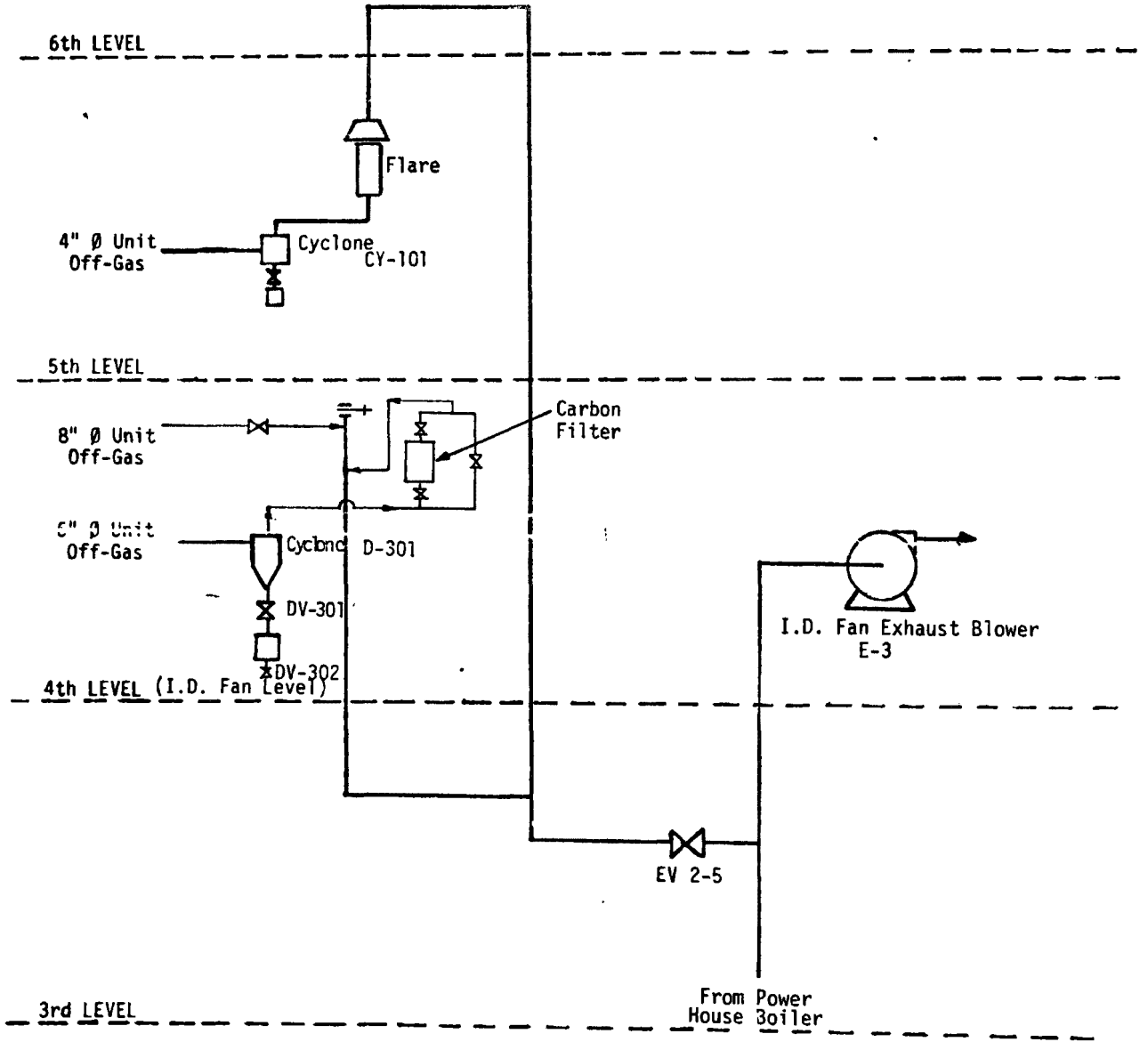

DUST COLLECTION SCHEMATIC - INVENTORY HOPPER

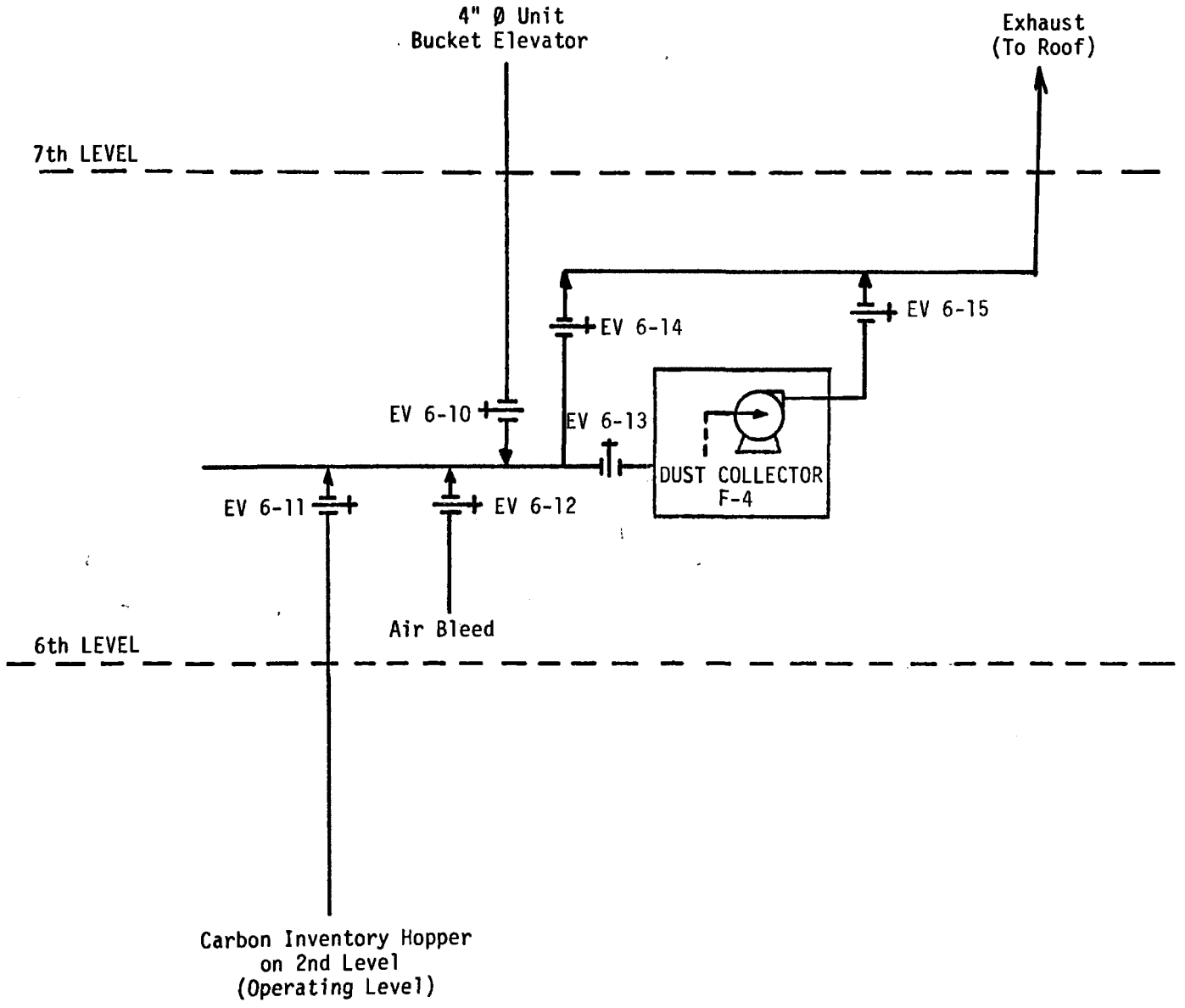

AIR SUPPLY SYSTEM SCHEMATIC FOR SYSTEM
ON SOUTH WALL OF BOILER HOUSE

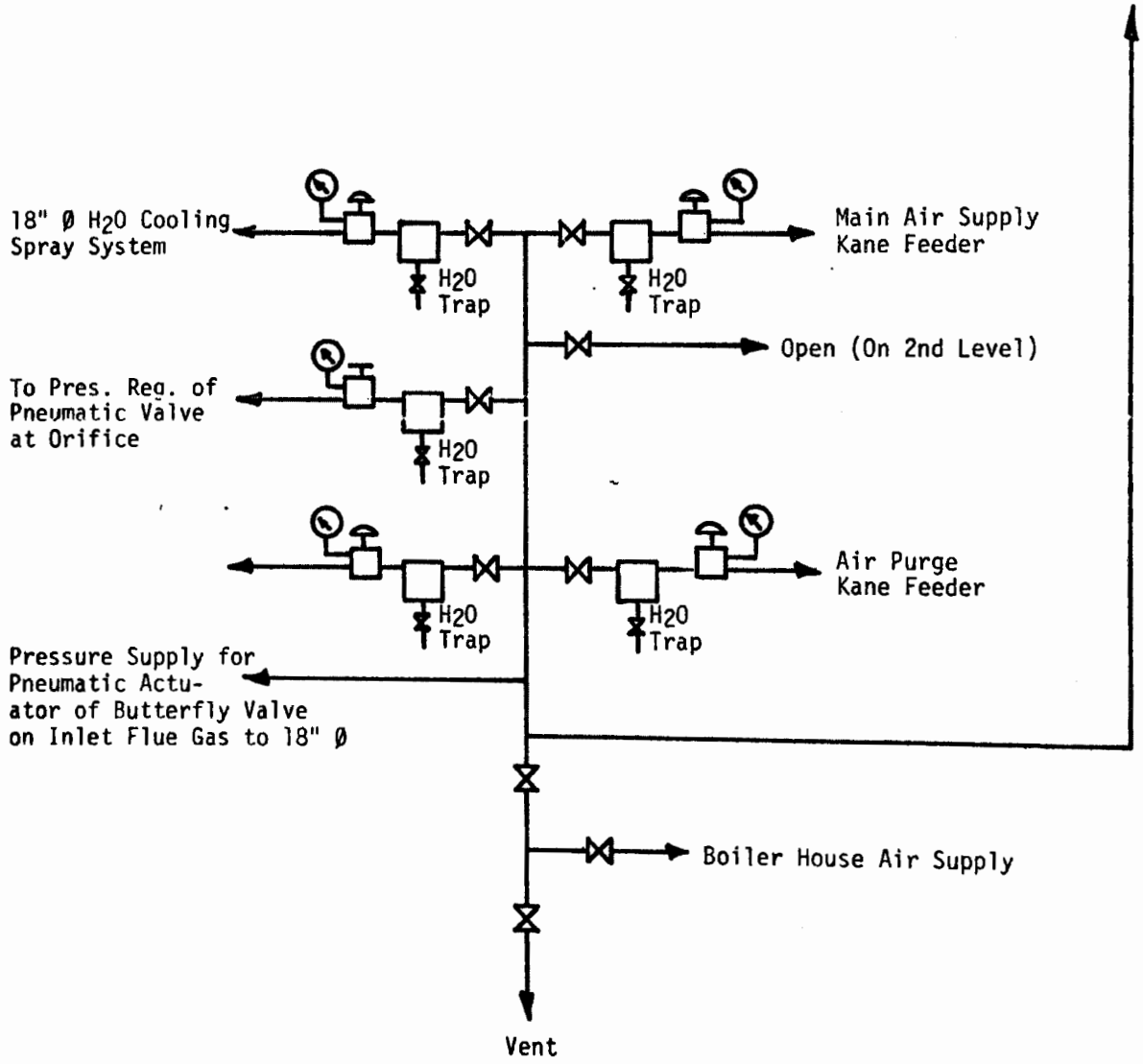

PRESSURE READING SPECIFICATIONS FOR 4 INCH DIAMETER REGENERATOR

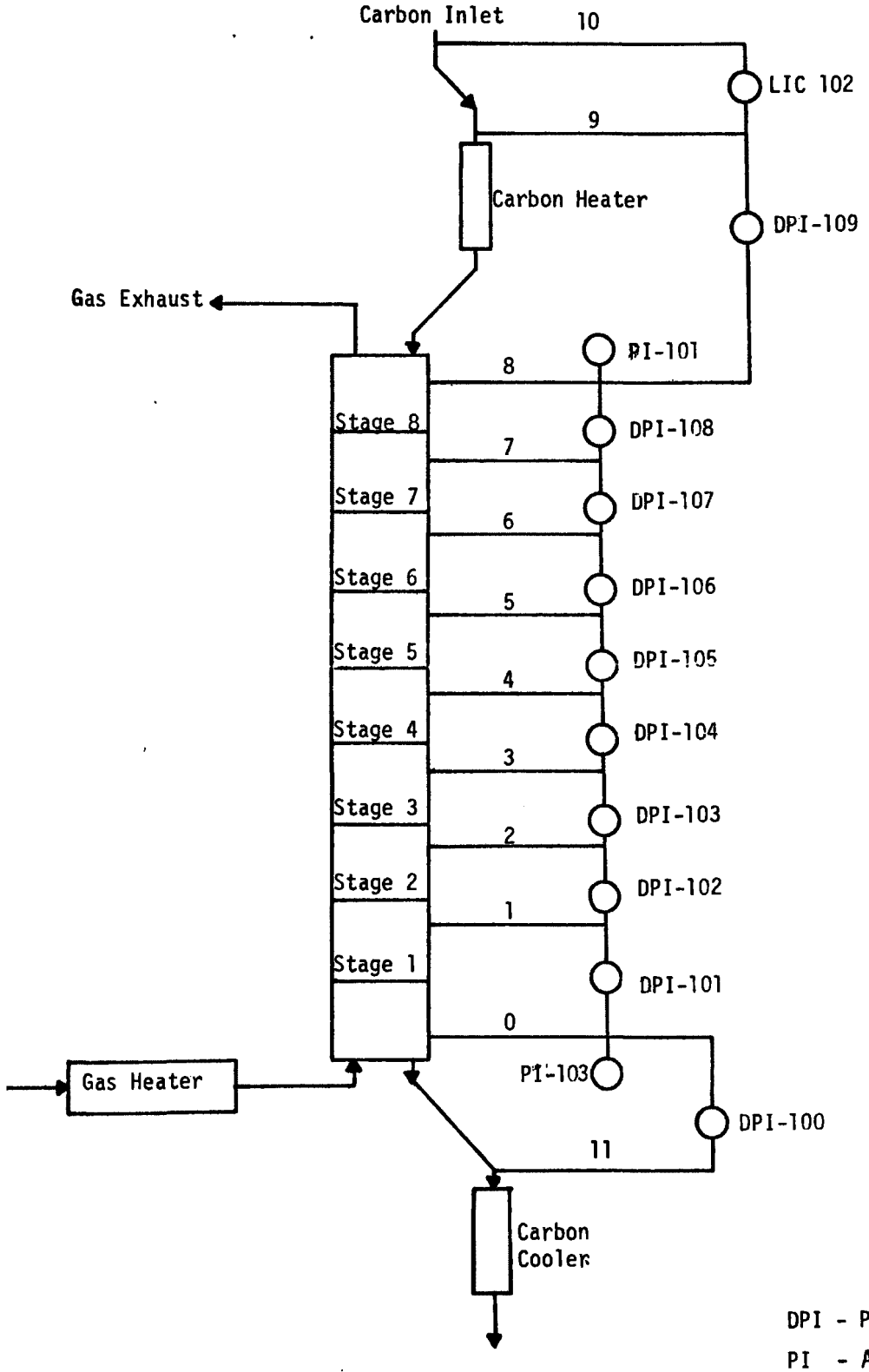

DPI - Pressure Drop

PI - Absolute Pressure

THERMOCOUPLE SPECIFICATIONS FOR 4 INCH DIAMETER REGENERATOR

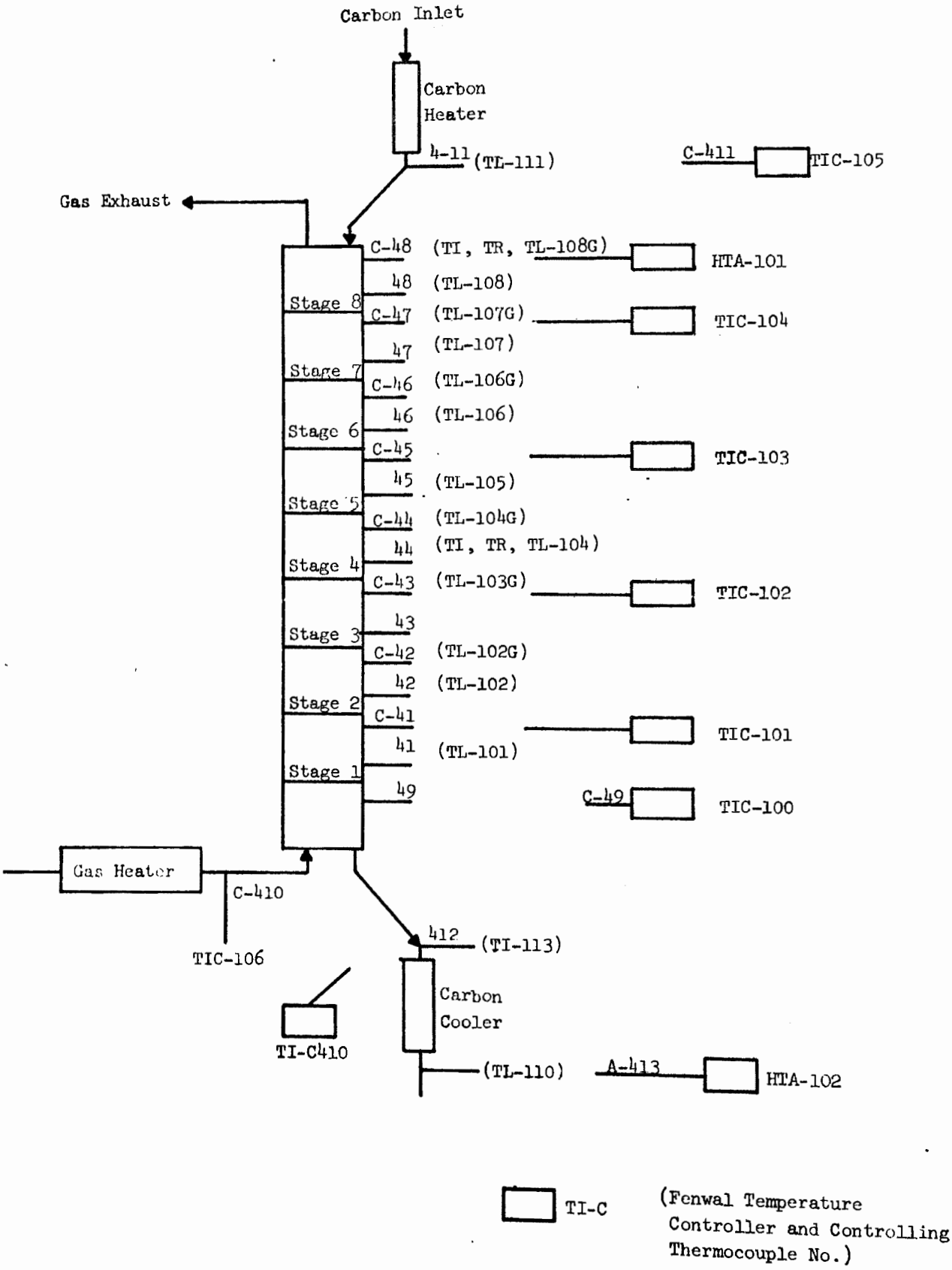

APPENDIX B-4-4

PROCESS CONTROL

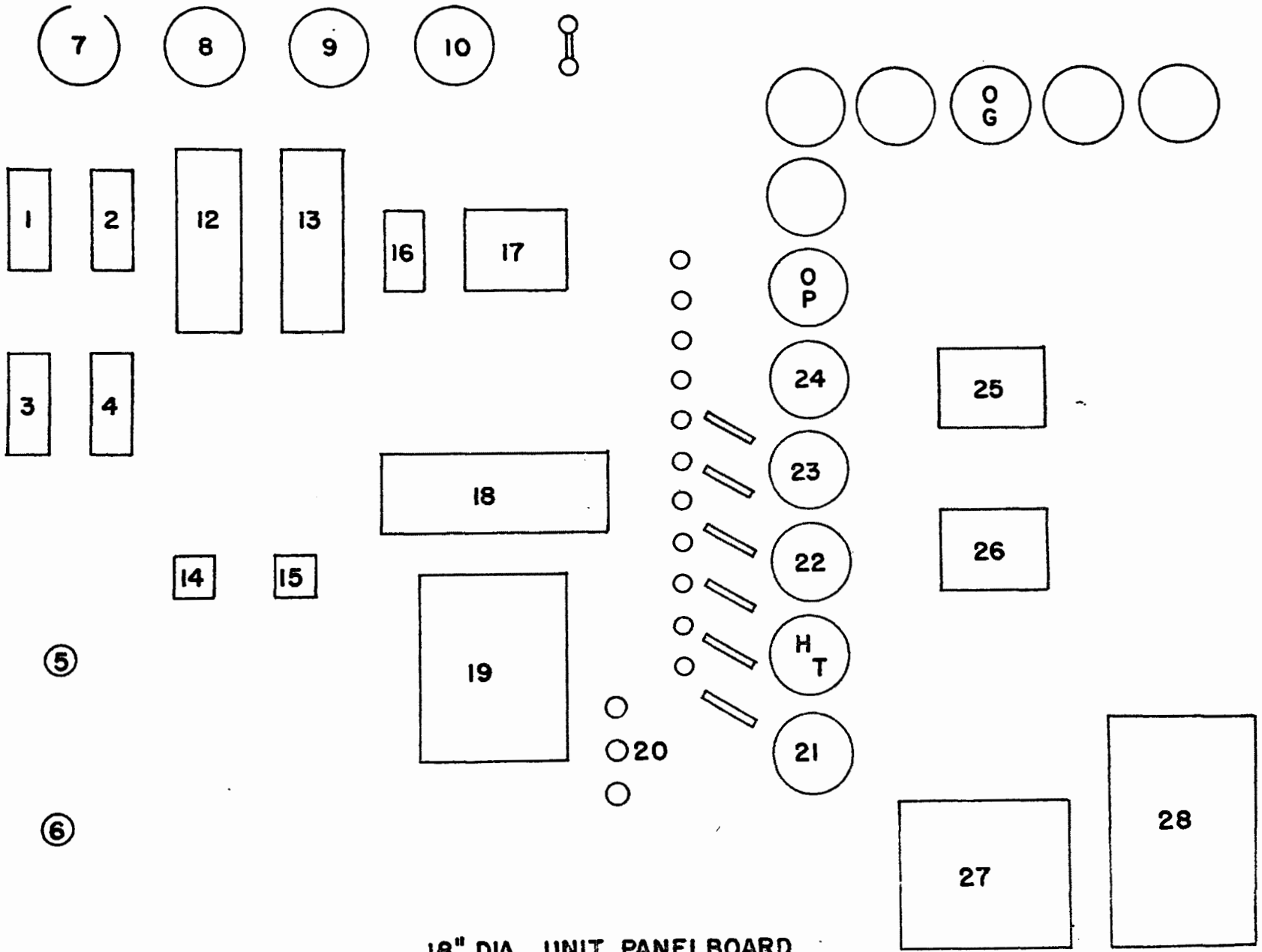

18" DIA. UNIT PANELBOARD

1 NO Rota.

2 SO_2 Rota.

3 O_2 Anal.

4 Sample Rota.

5 Sample Pump Bypass

6 Sample Pump ON-OFF

7 Orifice Mag. Ga.

8 Inlet Gas Mag. Ga.

9 18" ∅ Press Mag. Ga.

10 Press Drop Mag. Ga.

11 Inlet Valve OPEN-CLOSE

12 Steam 6" ∅ Unit

13 Steam 18" ∅ Unit

14 1/10 Hr. Timer

15 1 Hr. Timer

16 SO_2 Rota. 18" ∅ R-6-15-B, SS, BIK.

17 O_2 Anal.

18 SO_2 Anal.

19 SO_2 Recorder

20 Carbon Level Controller

21 Stage 1 Mag. Gauge

22 Stage 2 Mag. Gauge

23 Stage 3 Mag. Gauge

24 Stage 4 Mag. Gauge

HT Heat Exchanger Mag. Gauge

OP Outlet Press Mag. Gauge

OG Outlet Gas Mag. Gauge

25 Column Heaters

26 Spray Water

27 Inlet Gas Temperature Recorder

28 Bailey Bottom Stage Δ P Recorder

AUXILIARY CONTROL EQUIPMENT AND MEASUREMENT

1. H_2O Spray System (Schematic of System is attached.)

2. Analyzers
   A. SO_2 Analyzer and Recorder
   B. NO Analyzer - I.R.
   C. O_2 Analyzer
   D. Moisture Analysis with Packed Tubes of Drierite

3. Temperature - Multipoint Recorder

Gas Flow Rate Control

Control of the gas flow rate through the 18" diameter sorber is achieved by adjusting the pressure drop across an orifice. Curves were plotted using the orifice equation, which permitted the correct pressure drop setting to be determined quickly. In order to conserve space the curves are not included here. However, the orifice equation from which the curves were generated is:

$$\Delta P_o = 143.4(T_o + 460)\left[\frac{U}{T_c + 460}\right]^2$$

where ΔP_o = orifice pressure drop, inches W.G.
T_o = orifice temperature, ^oF
T_c = average column temperature, ^oF
U = linear gas velocity in 18" sorber, ft./sec.

APPENDIX B-4-5

PROCESS CONTROL - 8" DIAMETER MOVING BED SULFUR GENERATOR AND 6" DIAMETER PRE-CONDITIONER

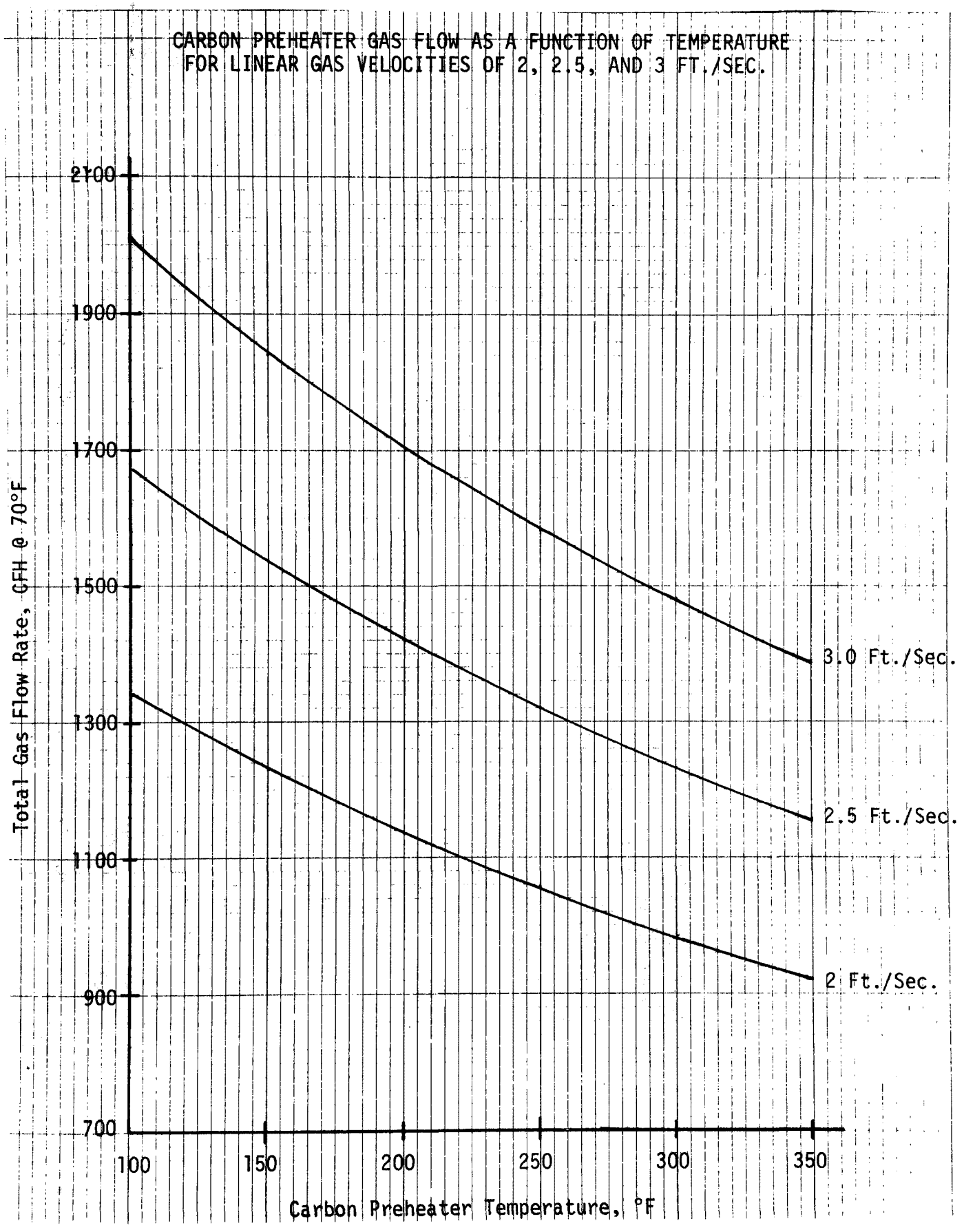
CARBON PREHEATER GAS FLOW AS A FUNCTION OF TEMPERATURE
FOR LINEAR GAS VELOCITIES OF 2, 2.5, AND 3 FT./SEC.
2100
1900
1700
1500
1300
1100
900
700
Total Gas Flow Rate, CFH @ 70°F
3.0 Ft./Sec.
2.5 Ft./Sec.
2 Ft./Sec.
100
150
200
250
300
350
Carbon Preheater Temperature, °F

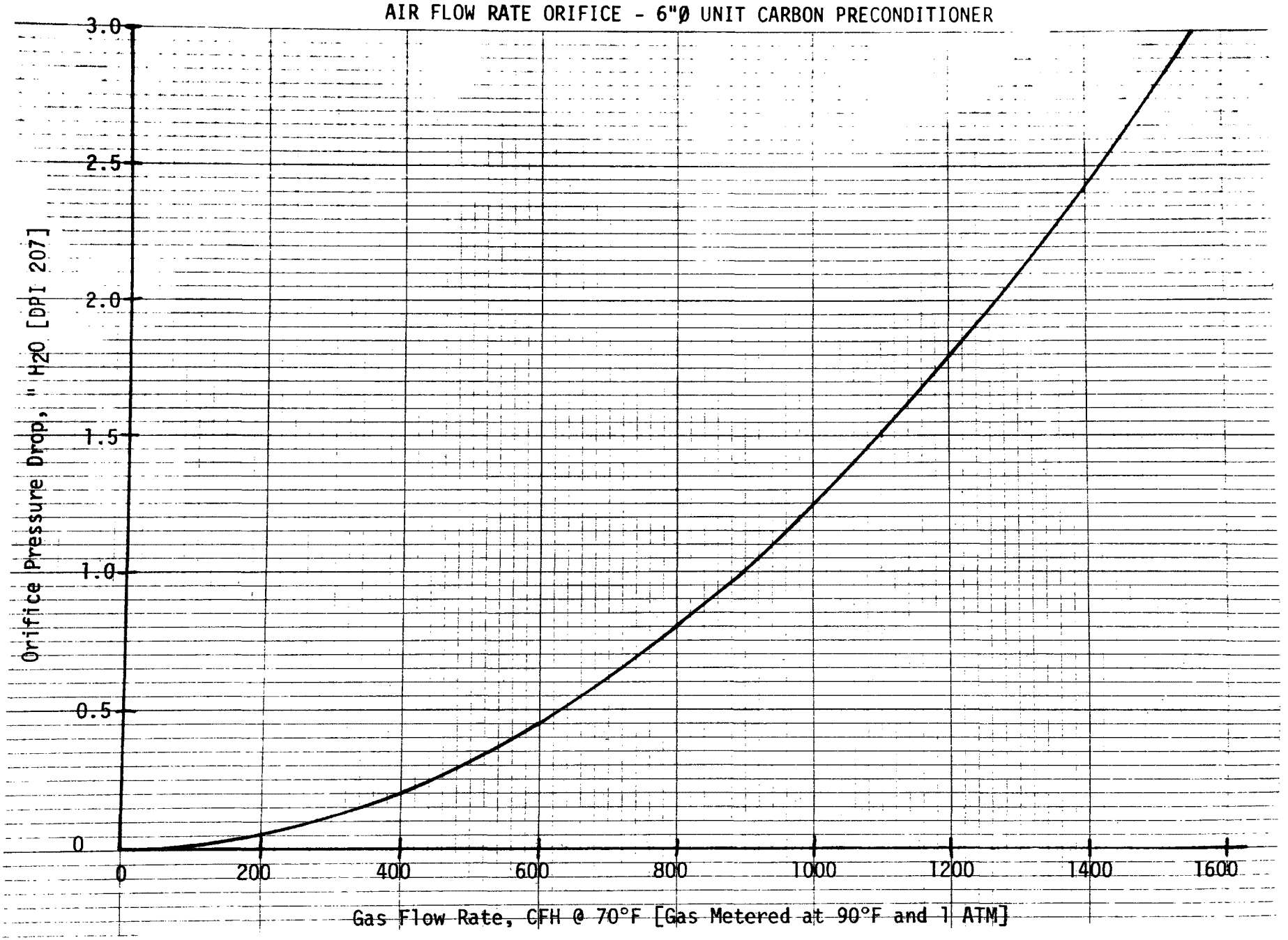
AIR FLOW RATE ORIFICE - 6"Ø UNIT CARBON PRECONDITIONER
Orifice Pressure Drop, " H_2O [DPI 207]
3.0
2.5
2.0
1.5
1.0
0.5
0
0
200
400
600
800
1000
1200
1400
1600
Gas Flow Rate, CFH @ 70°F [Gas Metered at 90°F and 1 ATM]

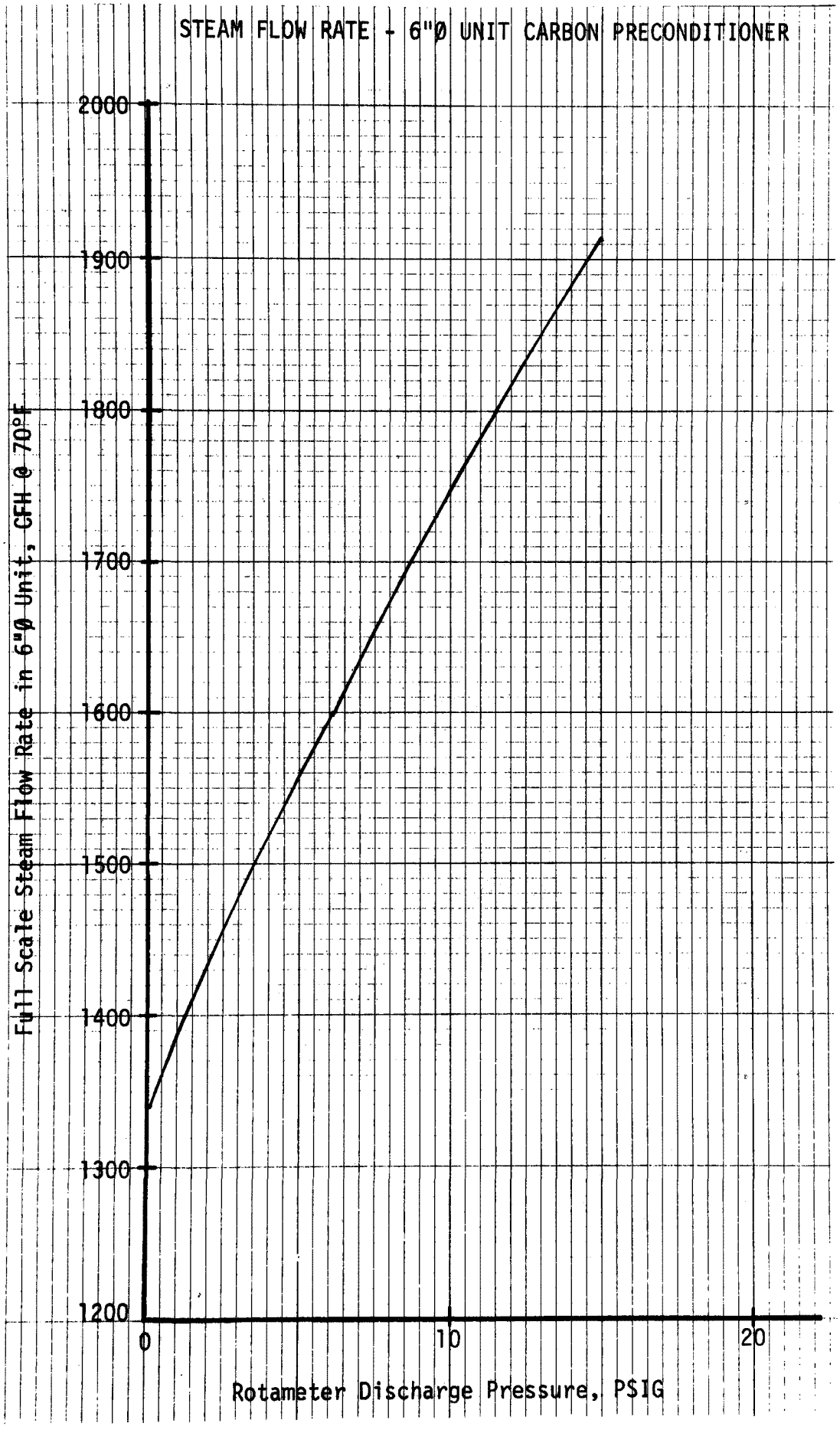
STEAM FLOW RATE - 6"Ø UNIT CARBON PRECONDITIONER
Full Scale Steam Flow Rate in 6"Ø Unit, CFH @ 70°F
2000
1900
1800
1700
1600
1500
1400
1300
1200
0
10
20
Rotameter Discharge Pressure, PSIG

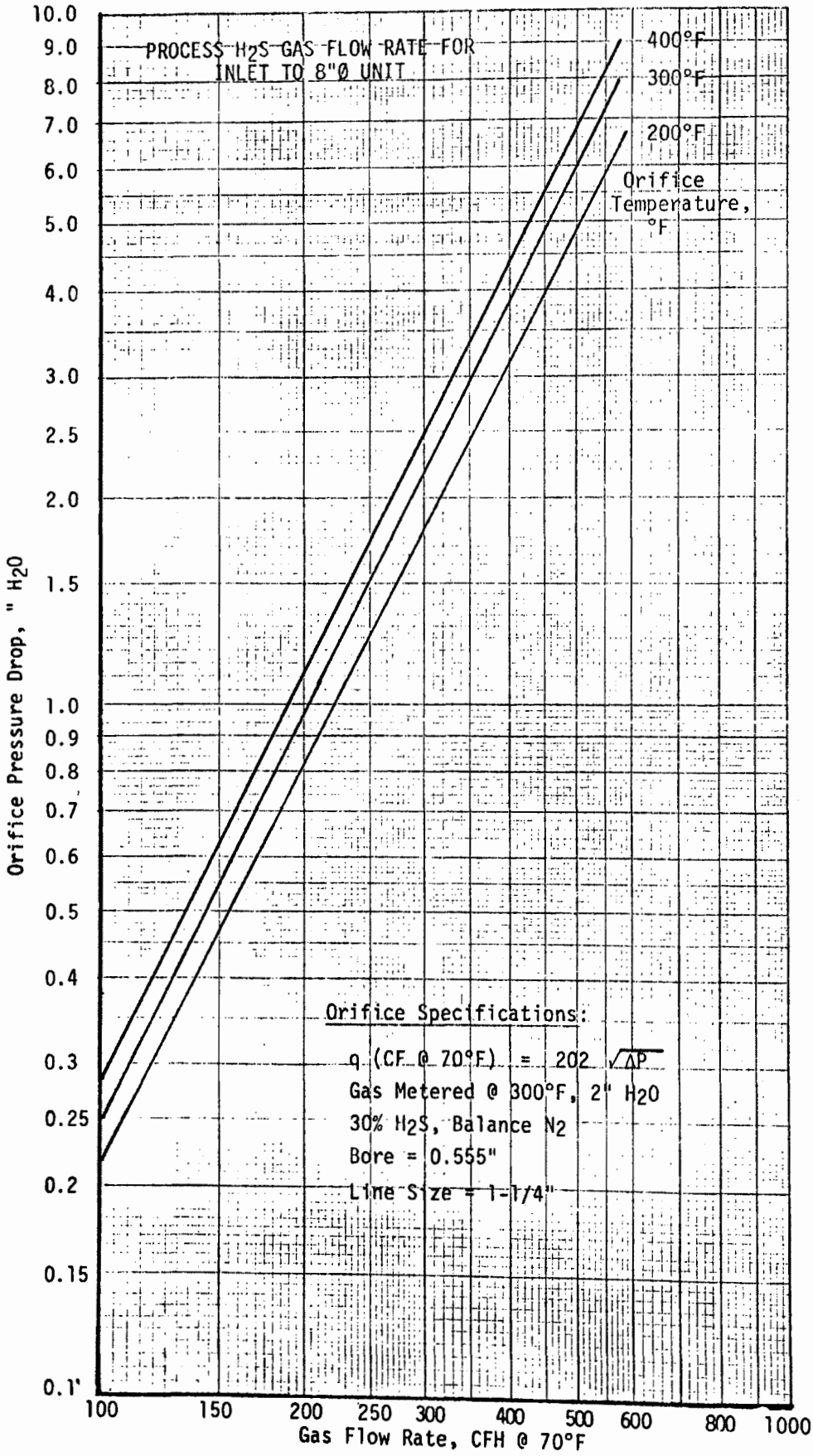
PROCESS H2S GAS FLOW RATE FOR INLET TO 8"Ø UNIT
400°F
300°F
200°F
Orifice Temperature, °F
Orifice Specifications:
q (CF @ 70°F) = 202 √ΔP
Gas Metered @ 300°F, 2" H2O
30% H2S, Balance N2
Bore = 0.555"
Line Size = 1-1/4"
Orifice Pressure Drop, " H2O
10.0
9.0
8.0
7.0
6.0
5.0
4.0
3.0
2.5
2.0
1.5
1.0
0.9
0.8
0.7
0.6
0.5
0.4
0.3
0.25
0.2
0.15
0.1
100
150
200
250
300
400
500
600
800
1000
Gas Flow Rate, CFH @ 70°F

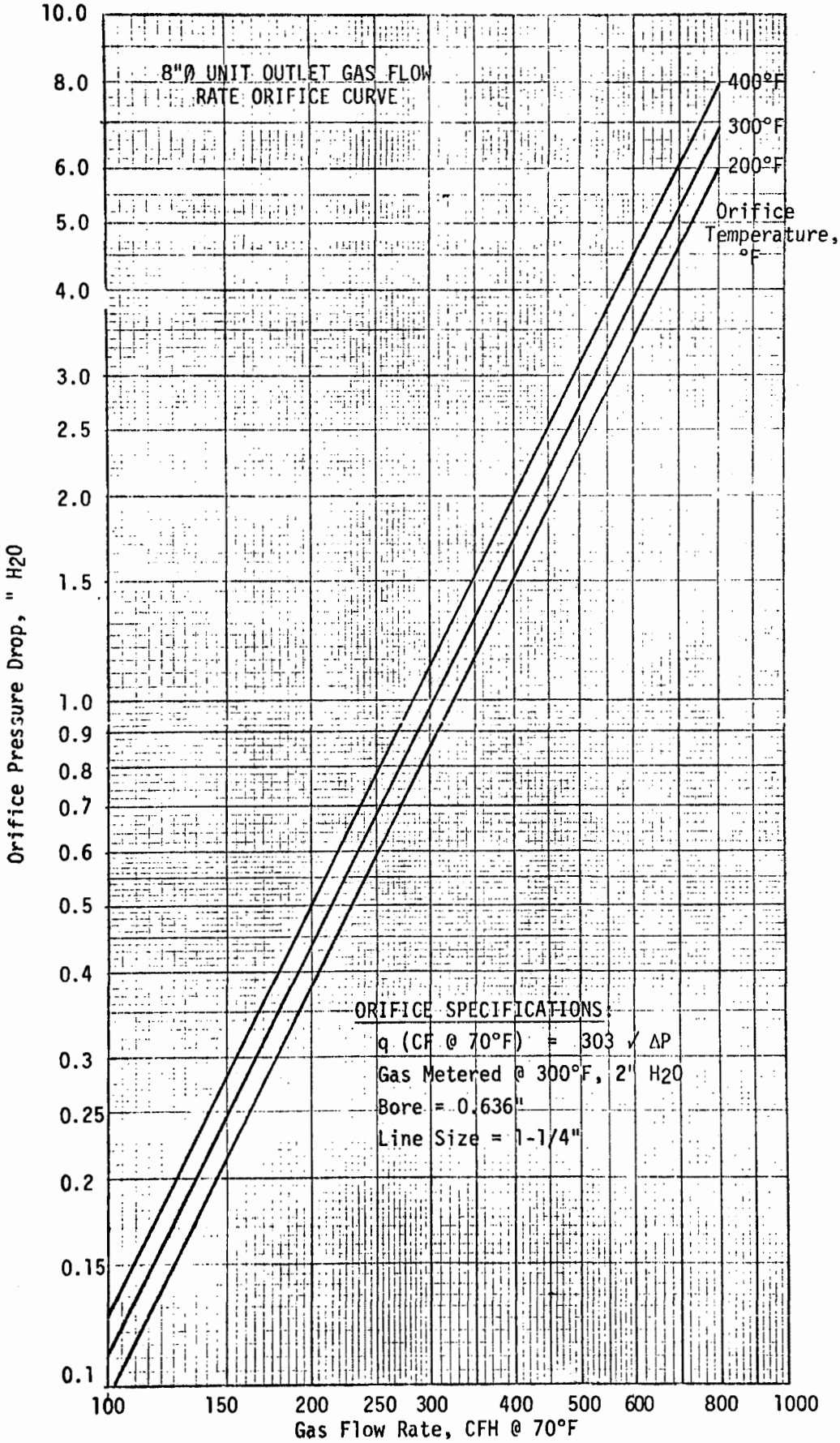
8"Ø UNIT OUTLET GAS FLOW
RATE ORIFICE CURVE
400°F
300°F
200°F
Orifice
Temperature,
°F
ORIFICE SPECIFICATIONS:
q (CF @ 70°F) = 303 √ ΔP
Gas Metered @ 300°F, 2" H2O
Bore = 0.636"
Line Size = 1-1/4"
Orifice Pressure Drop, " H2O
10.0
8.0
6.0
5.0
4.0
3.0
2.5
2.0
1.5
1.0
0.9
0.8
0.7
0.6
0.5
0.4
0.3
0.25
0.2
0.15
0.1
100
150
200
250
300
400
500
600
800
1000
Gas Flow Rate, CFH @ 70°F

TIME REQUIRED TO PURGE 8"Ø MOVING BED AND RELATED CARBON HANDLING EQUIPMENT AS A FUNCTION OF THE CARBON RATE

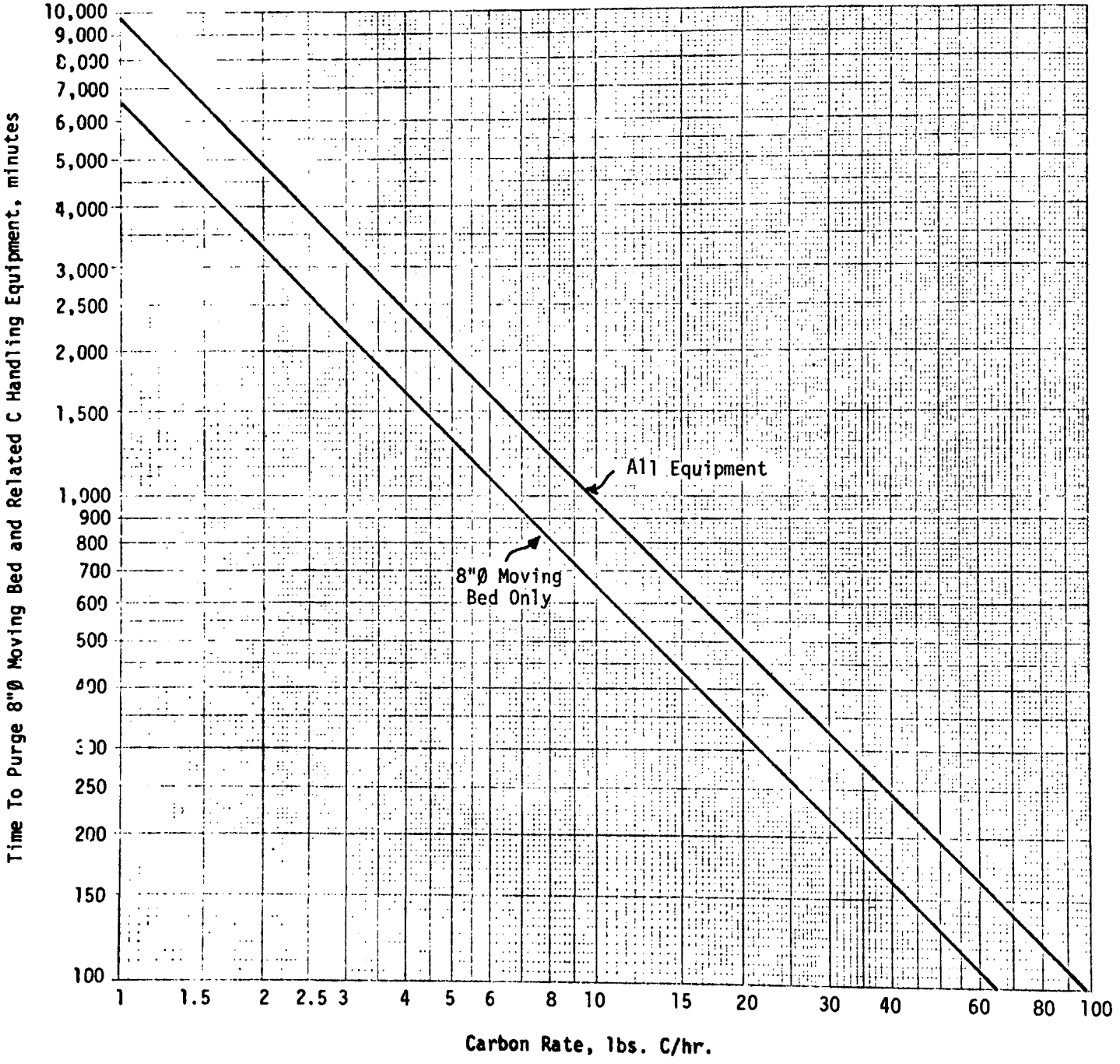

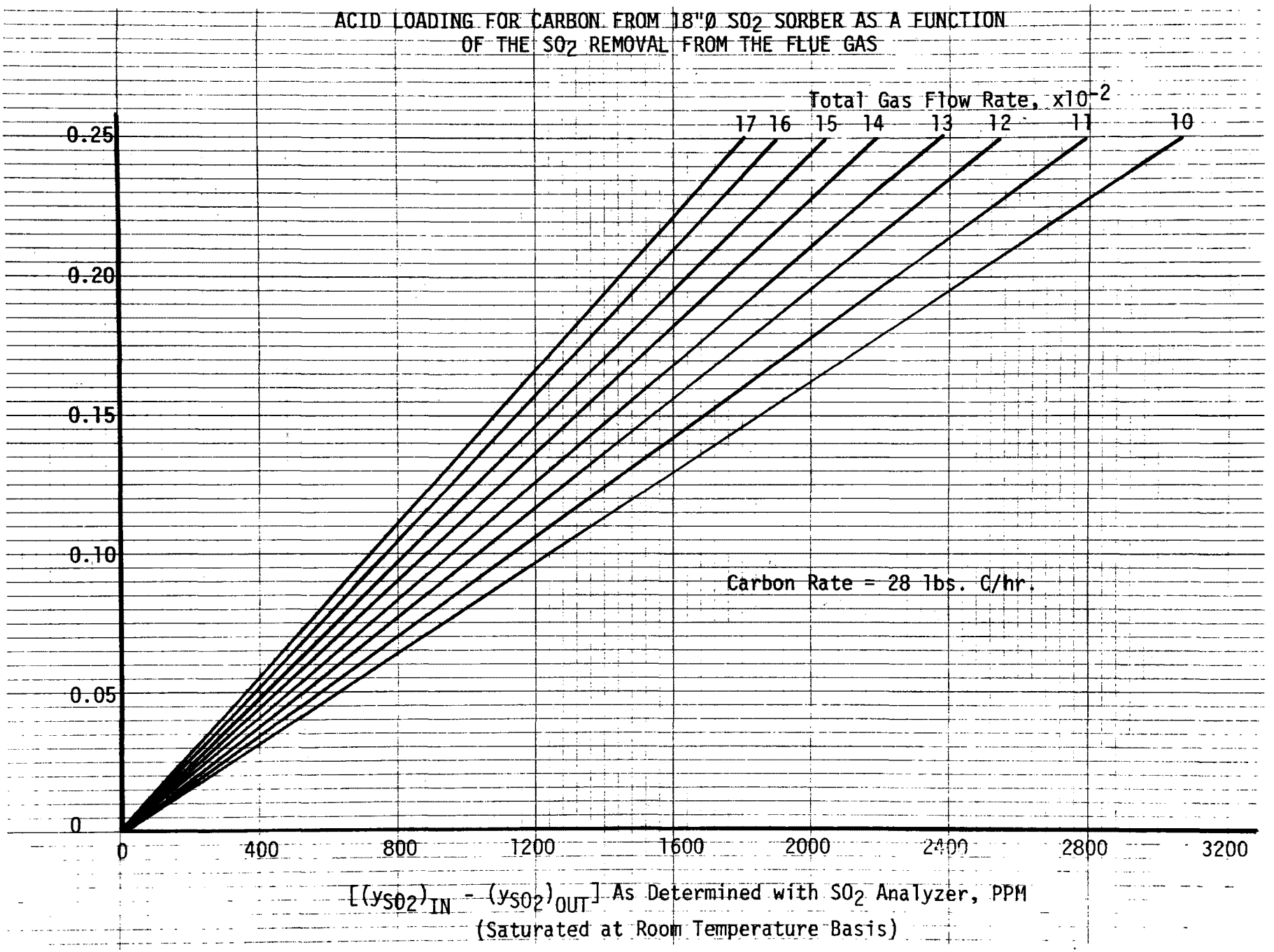
ACID LOADING FOR CARBON FROM 18"Ø SO2 SORBER AS A FUNCTION
OF THE SO2 REMOVAL FROM THE FLUE GAS
Total Gas Flow Rate, x10-2
17 16 15 14 13 12 11 10
Carbon Rate = 28 lbs. C/hr.
0.25
0.20
0.15
0.10
0.05
0
0 400 800 1200 1600 2000 2400 2800 3200
[(ySO2)IN - (ySO2)OUT] As Determined with SO2 Analyzer, PPM
(Saturated at Room Temperature Basis)

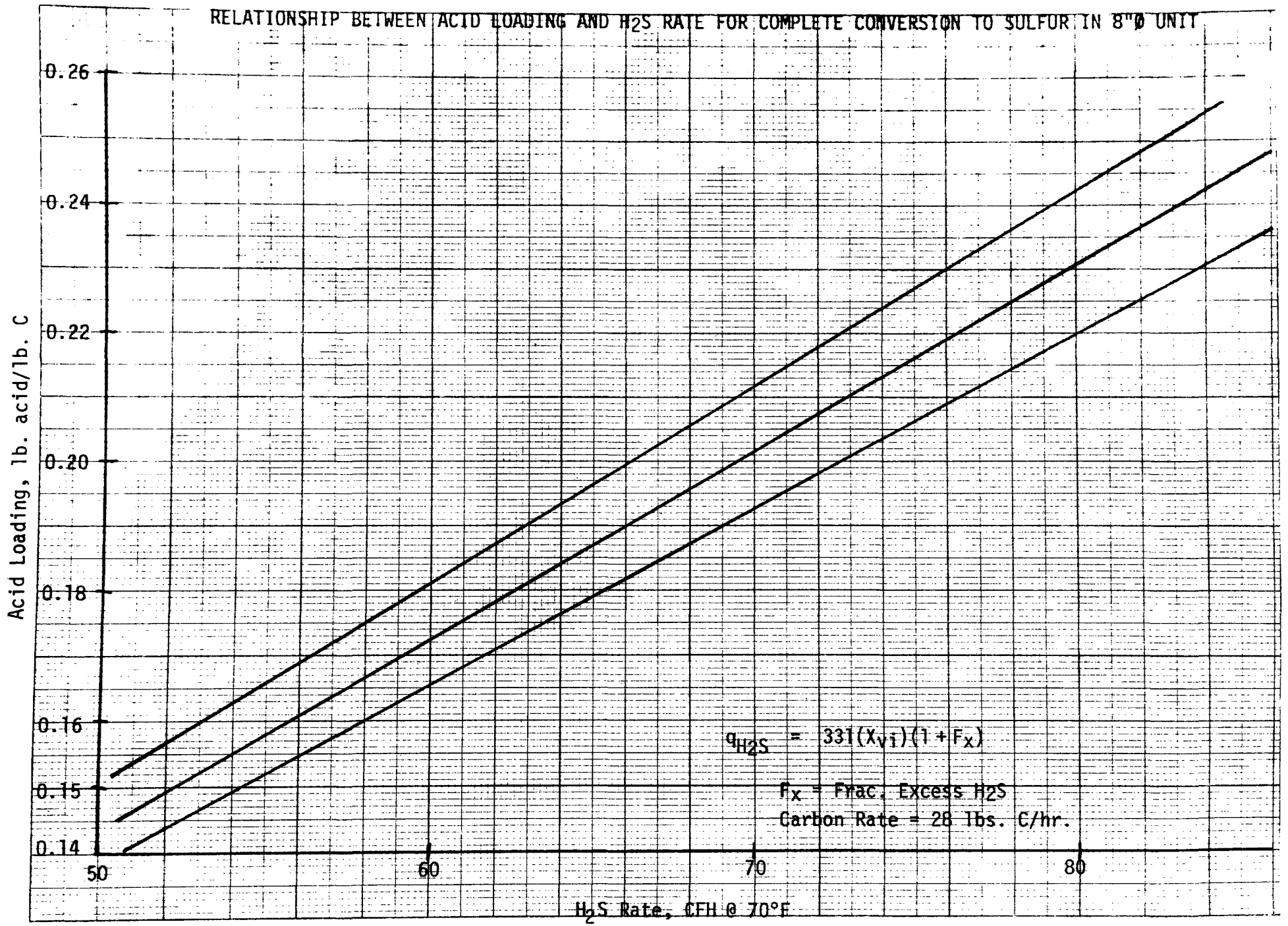
RELATIONSHIP BETWEEN ACID LOADING AND H2S RATE FOR COMPLETE CONVERSION TO SULFUR IN 8"Ø UNIT
Acid Loading, lb. acid/lb. C
0.26
0.24
0.22
0.20
0.18
0.16
0.15
0.14
50
60
70
80
H2S Rate, CFH @ 70°F
qH2S = 331(XVi)(1 + Fx)
Fx = Frac. Excess H2S
Carbon Rate = 28 lbs. C/hr.

APPENDIX B-4-6

PROCESS CONTROL - 4" DIAMETER S STRIPPER/H_2S GENERATOR

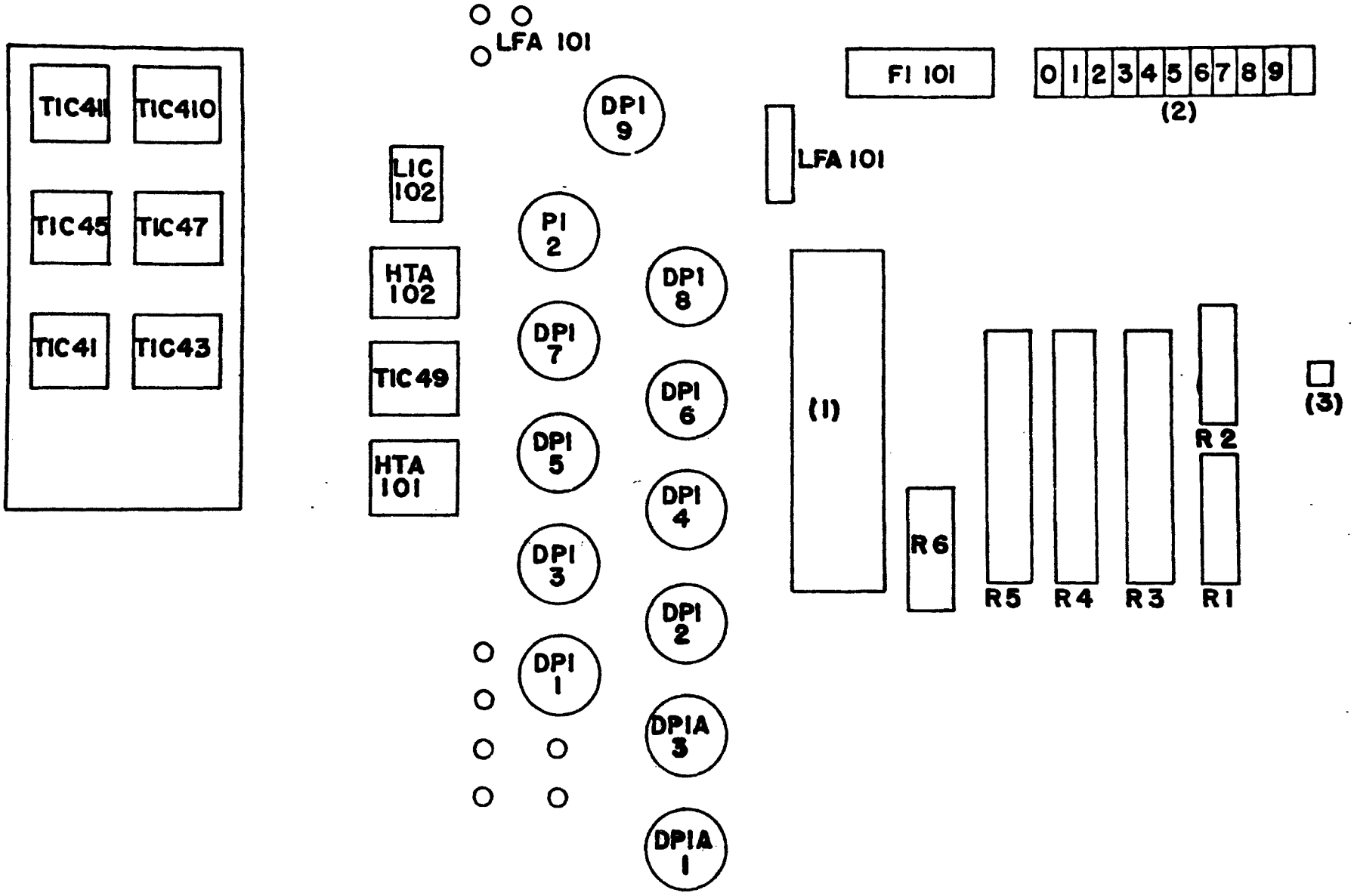

4" DIA UNIT PANELBOARD

TI C411	Carbon Heater Temperature Controller
TI C410	Gas Heater Temperature Controller
TI C45	Stages 5 and 6 Temperature Controller
TI C47	Stages 7 and 8 Temperature Controller
TI C41	Stages 1 and 2 Temperature Controller
TI C43	Stages 3 and 4 Temperature Controller
LIC 102	Carbon Heater Level
HTA 102	Temperature Controller
TI C49	Temperature Controller
HTA 101	Temperature Controller
LFA 101	LO Flow
DPI-1	Magnehelic Pressure Gauge
DPI-2	Magnehelic Pressure Gauge
DPI-3	Magnehelic Pressure Gauge
DPI-4	Magnehelic Pressure Gauge
DPI-5	Magnehelic Pressure Gauge
DPI-6	Magnehelic Pressure Gauge
DPI-7	Magnehelic Pressure Gauge
DPI-8	Magnehelic Pressure Gauge
DPI-9	Magnehelic Pressure Gauge
DPIA-1	Magnehelic Pressure Gauge
PI-2	Magnehelic Pressure Gauge
LIC 101	Man. Auto Level Alarm
LFA 101	Upper Seal Leg
(1)	Steam
F1-101	Flex-Tube Man.
R-1	H_2S Rota. Tube: R-6-15B, SS, BIK.
R-2	H_2 Rota. Tube: R-6-15B, SS
R-3	H_2S Rota. Tube: R-8M-25-4 BR 1/2 35 G10
R-4	CO_2 Rota. Tube: R-8M-25-4 BR 1/2 35 G10
R-5	N_2 Rota. Tube: R-8M-25-4 BR 1/2 35 G10
R-6	N_2 Lower Seal Leg: R-6-15A, SS, BIK.
(2)	Purge Rotas.
(3)	Panic Button

AUXILIARY CONTROL EQUIPMENT AND MEASUREMENT

1. Inlet and Outlet Gas Sample Line

   A. Both are tied into a gas chromatograph.

   B. The outlet line is heated and insulated. (Heater controlled by thermostat.)

CONSTANT VELOCITY CURVES FOR 4"Ø REGENERATOR

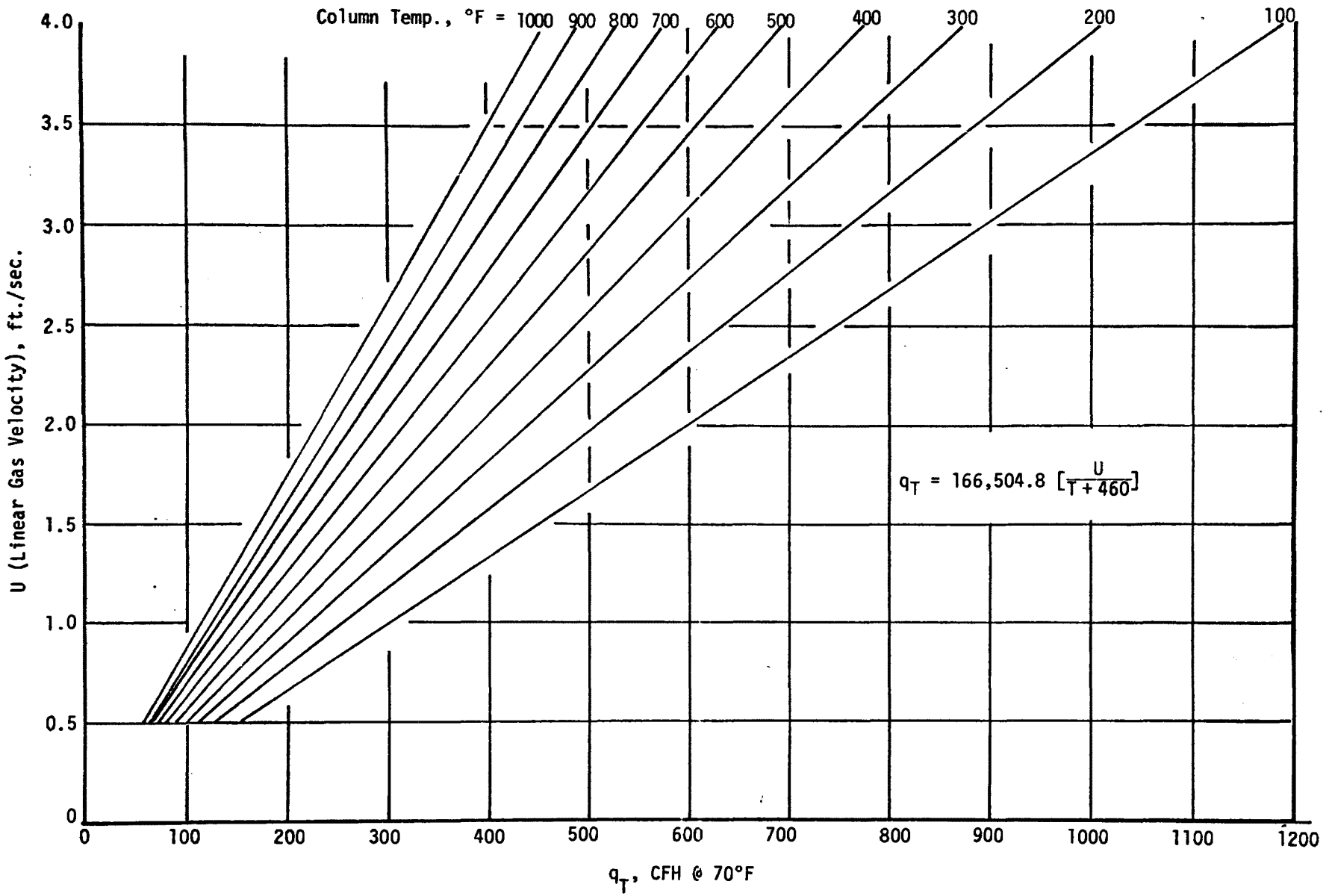

Gas Flow Rate Control

In the integrated pilot plant, direct reading rotameters were used so that the need for calibration curves was eliminated. In earlier work before integration, different rotameters were used which did require the use of calibration curves.

APPENDIX B-4-7

PILOT PLANT ELECTRICAL SYSTEM

Breaker Box No. 3

1	Inlet Gas Line Heater (18"Ø Unit) Orifice to Column
2	Inlet Gas Line Heater (18"Ø Unit) Orifice to Column
3	Lights and Plug Mold, 18"Ø Unit
4	
5	
6	
7	
8	
9	Level Controllers for 18"Ø Unit
10	Heaters, Steam Line, 18"Ø Unit
11	
12	Heaters, Steam Line, 18"Ø Unit

Breaker Box No. 2

1	
2	Two Heaters - 4"Ø Unit Off-Gas Line and Cyclone
3	
4	Sulfur Condenser Pump Heater Box Fan Motor + 2 Heaters (1500 Watt)
5	
6	Two Heaters; 1 to Carbon Filter, Other to Heater Filters to S Condenser
7	Chromatograph Module Control (Main Breaker)
8	Two Heaters; 1 to Carbon Filter, Other to Heater Cyclone to Filters
9	Receptacles at Chromatograph
10	15% Carbon Flow to Top Stage of 4"Ø Unit (CFC-3)
11	
12	
13	Pre-Heater Blower
14, 16	Heater (Inlet Gas 8"Ø Unit)
15, 17	Power Stat 204 (Heater 8"Ø Unit)
18, 20	
19, 21	Power Stat 205 (Heater 8"Ø Unit)
22, 24	Column Heater (6"Ø Unit)
23, 25	Power Stat 206 (Heater 8"Ø Unit)
26, 28	
27, 29	
30, 32	S Condenser H_2O Pump
31	
33	Vibrating Feeder CV-2 (8"Ø Unit C Discharge)
34	Standby Screw Feeder

APPENDIX B-4-8

START-UP AND SHUTDOWN PROCEDURES

Start-up Procedure for Integral SO_2 Pilot Plant

1. Cut on 6"Ø unit blower.
   a) Cut on Breaker 13, Breaker Box # 2.
   b) Cut on switch on 8"Ø unit panel board.
   c) Set velocity as determined by orifice ΔP for Gauge DPI-301.

2. Set nitrogen flow rate into 4"Ø unit and the upper and lower seal legs.
   a) Set pressure at N_2 regulator, R-5.
   b) Set air pressure for inlet gas pneumatic valve at 20 psig (behind panel board).
   c) Set flow rates at rotameters.

3. Cut on automatic slide valve carbon feeder (CFC-4) to 4th stage of 4"Ø unit.
   a) Set air pressure for Foxboro DP controller at 20 psig.
   b) Set air pressure for cylinder valve operator at 60 psig.

4. Cut on vibrating feeder (CV-4) for 4"Ø unit carbon discharge.
   a) Cut on Breaker 12, Breaker Box # 1.
   b) Set variac at 100% (115 volts).
   c) Cut on DPDT switch on 4"Ø unit panel board to AUTO position.

5. Cut on vibrating feeder (CV-2) for carbon discharge from 8"Ø unit.
   a) Cut on Breaker 33, Breaker Box # 2.
   b) Set air pressure for Bailey DP controller at 20 psig.
   c) Cut on at vibrator control box.

6. Set nitrogen flow rate into 8"Ø unit and the upper and lower carbon seal legs.
   a) Set pressure at N_2 regulator.
   b. Set flow rate at rotameters.

7. Cut on main breaker for starting switches.

8. Cut on 4"Ø unit bucket elevator at starter box.

9. Cut on flue gas blower (FGB-1).
   a) Drain possible condensate from blower.
   b) Open valves near blower.
   c) Close flue gas valve at stack (should have been closed).

d) Cut on blower at starter box.
e) Set air pressure for trunnion valve at 30 psig (manual sta. rd. ~9.1).
f) Set air pressure for manual station at 20 psig.
g) Set gas flow rate by adjusting inlet gas valve at manual station.

10. Cut on exhaust blowers E-1 and E-2 for 18"Ø unit.

11. Adjust pressure at gas outlet of 18"Ø unit.
a) Close Valves EV-6-2 and open EV-6-1 and EV-6-3.
b) Adjust Valves EV-6-4 as necessary for -0.2 to 0.0 DP reading.

12. Cut on vibrating feeder (CV-5) for 18"Ø unit carbon discharge.
a) Cut on DPDT switch to probe control for CV-5.
b) Cut on at vibrator control box.

13. Cut on automatic carbon ball valve feeder (CFC-3) to top stage of 4"Ø unit with appropriate switch at panel board.

14. Cut on cooling H_2O to 4"Ø unit carbon cooler.

15. Cut on Kane gravimetric carbon feeder.
a) Cut on Breaker 4, Breaker Box # 1 (should be on).
b) Set air pressure at 40 psig at regulator.
c) Cut off air pressure at 35 psig at Kane unit.
d) Set carbon feed rate.

16. Cut on vibrating feeder (CV-7) between Kane feeder and 18"Ø unit bucket elevator.

17. Cut on 18"Ø unit bucket elevator at starter box.

18. When carbon flow at steady state, start system heat-up.

19. SO_2 Sorber (18"Ø Unit) Heat-up Procedure
a) Air Preheater Start-up
1) Cut on propane tanks to line pressure of about 35 psi.
2) Open Valve 1.
3) Open Valve 2.
4) Cut on igniter.
5) Open Valve 3 (crack).
6) Open Valve 4 to desired pressure (~20 psig at 3 ft./sec. should be sufficient for 300°F).

b) Cut on inlet gas line heaters.
   1) Cut on Breakers 20 and 21, Breaker Box # 1; and Breakers 1 and 2, Breaker Box # 3.
   2) Set three Chromalox temperature controllers on I.D. fan floor at 310°F.

c) Cut on water spray to standby.
   1) Close H_2O valve near column (Valve H-1).
   2) Open air valve near column (Valve H-2).
   3) Cut on air on operating floor.
      a) Set air pressure at regulator at 45 psig.
      b) Set air flow rate at rotameter.
   4) Open H_2O bypass valve to sump (Valve H-3 on I.D. fan floor near turborod heater).
   5) Set thermostat at 150°F (on I.D. fan floor).
   6) Cut on H_2O on operating floor.
      a) Open H_2O Valve H-4.
      b) Cut on H_2O pump.
      c) Adjust manual bypass to the indicated flow rate.
   7) Cut on Breaker 22, Breaker Box # 1.

d) Cut on steam tracing to gas sample lines.

20. Carbon Preconditioner (6"Ø Unit Heat-up)
   a) Cut on inlet gas heater.
      1) Cut on starter box.
      2) Set TIC-302 temperature controller at indicated temperature.

   b) Cut on column heater.
      1) Cut on Breakers 22 and 24, Breaker Box # 2.
      2) Set TIC-303 temperature controller at indicated temperature.

   c) Cut on steam tracing to off-gas line, cyclone, and carbon filter.

21. Sulfur Generator (8"Ø Unit Heat-up)
   a) Cut on inlet gas heater.
      1) Cut on Breakers 14 and 16, Breaker Box # 2.
      2) Set TIC-201 controller at indicated temperature.
   b) Cut on column heaters.
      1) Cut on Breakers 15, 17, 19, 21, 23 and 25, Breaker Box # 2.
      2) Set Powerstats 204, 205 and 206 at indicated settings indicated by AM 204, 205 and 206.
   c) Cut on steam tracing to gas sample lines.

22. H_2S Generator/Sulfur Stripper (4"Ø Unit Heat-up)
    a) Cut on power to controllers.
        1) Cut on Breakers 7, 9, Breaker Box # 1.
        2) Cut on heater power switch at panel board.

    b) Cut on inlet gas heater.
        1) Cut on Breaker 13, Breaker Box # 1.
        2. Set TIC-106 controller at indicated temperature.

    c) Cut on inlet gas plenum heater.
        1) Cut on Breaker 14, Breaker Box # 1.
        2) Set TIC-100 controller.

    d) Cut on column heater.
        1) Cut on Breakers 15, 16, 17, and 18, Breaker Box # 1.
        2) Set TIC-101, -102, -103 and -104 controllers.

    e) Cut on carbon preheater.
        1) Cut on Breaker 19, Breaker Box # 1.
        2) Set TIC-105 controller.

    f) Cut on off-gas line and cyclone heater.
        1) Cut on Breaker 2, Breaker Box # 2.
        2) Set powerstat to get indicated temperature.

Shutdown Procedure

1. Shut off propane; readjust orifice ΔP for 18"Ø unit as necessary to maintain indicated velocity.

2. Cut off Breakers 13, 14, 15, 16, 17, 18 and 19, Breaker Box # 1; and cut off Breaker 2, Breaker Box # 2.

3. Adjust rotameter R-5 as necessary to maintain gas velocity in 4"Ø unit.

4. Cut off Breakers 22 and 24, Breaker Box 2; adjust orifice ΔP for 6"Ø unit as necessary to maintain gas velocity. Cut off starter box for inlet gas heater for 6"Ø unit.

5. Cut off breakers 14, 15, 16, 17, 19, 21, 23 and 25, Breaker Box # 2.

6. After all temperatures steady, near 100°F, cut off carbon flow.
   a) Cut off Kane feeder.
   b) Cut off bucket elevator.
   c) Cut off CV-7.
   d) Cut off FC-102 (15% flow to 4"Ø unit).

7. Cut off Breakers 7 and 9, Breaker Box # 1; cut off heater power switch on panel board for 4"Ø unit.

8. Cut off gas flow to 8"Ø unit.
   a) USL
   b) LSL
   c) column

9. Cut off 18"Ø unit blowers.
   a) Exhaust blower
   b) Dust collector exhaust blower
   c) Flue gas blower

10. Cut off blower for 6"Ø unit (preconditioner).

11. Cut off gas flow to 4"Ø unit.
    a) USL
    b) LSL
    c) Column

12. Cut off main N_2 supply.

13. Cut off Breaker 12, Breaker Box # 1; cut off Breaker 33, Breaker Box # 2.

APPENDIX B-5

SAFETY PROGRAM FOR PILOT PLANT OPERATION OF THE WESTVACO PROCESS

SUMMARY

EMERGENCY PROCEDURES

HYDROGEN SULFIDE OR HYDROGEN RELEASE

HYDROGEN SULFIDE RELEASE

CATEGORY I - LEAK IN EQUIPMENT OR GAS SUPPLY

AT THE INDICATION THAT H_2S IS REACHING DANGEROUS CONCENTRATIONS:

1. DON AN ESCAPE MASK, PROCEED TO THE SAFETY EQUIPMENT AREAS AND DON A CANISTER MASK.
2. SHUT OFF THE H_2S AT THE PANEL BOARD AND IN THE GAS HANDLING AREA.
3. IF THERE IS A LARGE LEAK IN THE GAS HANDLING AREA, DON A SCOTT AIR-PAK BEFORE ENTERING TO SHUT IT OFF.
4. NOTIFY THE SUPERVISOR. (NAMES AND PHONE NUMBERS POSTED AT PANEL BOARD).
5. CHECK H_2S LEVELS IN THE GENERAL AREA. IF THE H_2S CONCENTRATION IS BETWEEN 170 - 300 PPM AND DOES NOT BEGIN TO DECREASE IN 10 - 15 MINUTES, SOUND THE H_2S ALARM. IF THE CONCENTRATION IS ABOVE 300 PPM SOUND THE ALARM IMMEDIATELY AND FOLLOW STEPS 4 AND 5 IN CATEGORY II.

CATEGORY II - PERSONNEL OVERCOME OR UNCONTROLLABLE LEAK

1. SOUND THE H_2S ALARM.
2. DON ESCAPE MASK, GO TO SAFETY CABINET AND DON CANISTER MASK AND EVACUATE TO UPWIND POINT FROM GAS RELEASE.
3. IF PERSON IS OVERCOME AFTER PUTTING ON CANISTER MASK, REMOVE THE VICTIM TO AN UPWIND POINT AND APPLY FIRST AID.
4. CALL FIRST AID (EXT. 200) AND REPORT EMERGENCY.
5. SUPPLY INFORMATION TO THE FIRST AID SQUAD UPON ARRIVAL.

HYDROGEN RELEASE

CATEGORY I - EQUIPMENT OR GAS AREA LEAK, FIRE

1. SHUT OFF THE H_2 (ALSO H_2S IF FIRE) IN PANEL BOARD AND GAS HANDLING AREA.
2. IF THERE IS A FIRE, EXTINGUISH WITH A DRY CHEMICAL EXTINGUISHER.
3. NOTIFY THE SUPERVISOR.
4. TEST FOR FLAMMABLE LEVELS OF H_2 AND IF THEY EXIST SOUND THE ALARM AND FOLLOW THE STEPS IN CATEGORY II, BELOW.
5. NOTIFY THE FIRE MARSHALL OF ANY FIRES THAT OCCUR AND ARE EXTINGUISHED.

CATEGORY II - EXPLOSION, UNCONTROLLABLE LEAK OR FIRE

1. SOUND THE H_2 ALARM.
2. EVACUATE THE BUILDING TO UPWIND POINT.
3. IF FIRE OR EXPLOSION IS IN THE BUILDING, SHUT OFF THE HYDROGEN AND HYDROGEN SULFIDE IN THE GAS HANDLING AREA.
4. NOTIFY FIRST AID (EXT. 200) AND THE FIRE BRIGADE (EXT. 277).
5. PROVIDE INFORMATION TO THE FIRST AID SQUAD AND FIRE BRIGADE UPON ARRIVAL.

TABLE OF CONTENTS

	Page
SUMMARY - EMERGENCY PROCEDURES	790
INTRODUCTION	792
Description of Equipment and Location	792
HYDROGEN SULFIDE	797
Physical Properties	797
Physiological Effects of Hydrogen Sulfide	797
Responses to Various Concentrations of Hydrogen Sulfide	798
Location and Operation of Regenerator Equipment	799
Protective Measures for Operating Personnel	799
Safety Procedures	800
Precautions in Handling and Storage	800
Emergency Procedures	801
HYDROGEN	803
Physical Properties	803
Location and Operation of Equipment	803
Protective Measures	803
Safety Procedures	804
Emergency Procedures	805
First Aid	806
SULFUR DIOXIDE	807
Physical Properties	807
Location and Operation of Equipment	807
Protective Measures	808
Precautions in Handling and Storage	808
Leak Detection	809
First Aid Suggestions	809
NITRIC OXIDE	811
Physical Properties	811
Location and Operation of Equipment	811
Precautions in Handling and Storage	812
Leak Detection	813
First Aid Suggestions	813

INTRODUCTION

Pilot plant equipment is located in the area of No. 6 boiler to evaluate the Westvaco Process for removal of SO_2 from flue gas with activated carbon and for regeneration of the carbon. Three reactors, an 18 inch diameter SO_2 sorber, a 4 inch diameter regenerator, and a 8 inch diameter regenerator, along with associated feed and handling equipment, will be used. Instrumentation is located on a central panel board on the operating floor level of No. 6 boiler. Gases to be used in the study are stored in the gas handling area between the cooling tower and coal storage hopper at the east end of the power plant.

At various times hydrogen sulfide, hydrogen, sulfur dioxide and nitric oxide will be stored in the gas handling area and used in the reactors. Hydrogen sulfide, sulfur dioxide and nitric oxide are toxic gases and hydrogen is highly flammable, as is hydrogen sulfide.

Equipment, exhaust systems, and storage areas are designed to minimize gas leakage into the air. There always exists, however, the possibility that gases will escape and the following program is designed to prepare operators in case of accidental gas release.

All operators will participate in a training program. Practice in the program will continue until the operators respond automatically. This program will include:

A. Information on the Location and Operation of Equipment
B. Information on the Location and Practice in the Use of Gas Masks
C. Instructions Concerning the Alarm Systems, Various Hazardous Gas Detectors
D. Instruction on the Proper Evacuation Routes
E. Location(s) of Telephone(s) To Use in Case of Accidents
F. Instruction on First Aid Procedures
G. Instructions on the Proper Handling of Cylinders.

Description of Equipment and Location

The pilot plant used to study the development of the Westvaco Process is located in the northeast corner of the boiler house near No. 6 boiler as shown on the plot plan on the following page. The pilot plant treats a slipstream of the stack gas from No. 6 boiler. Regeneration equipment in the same location is supplied by gases from a storage area located between

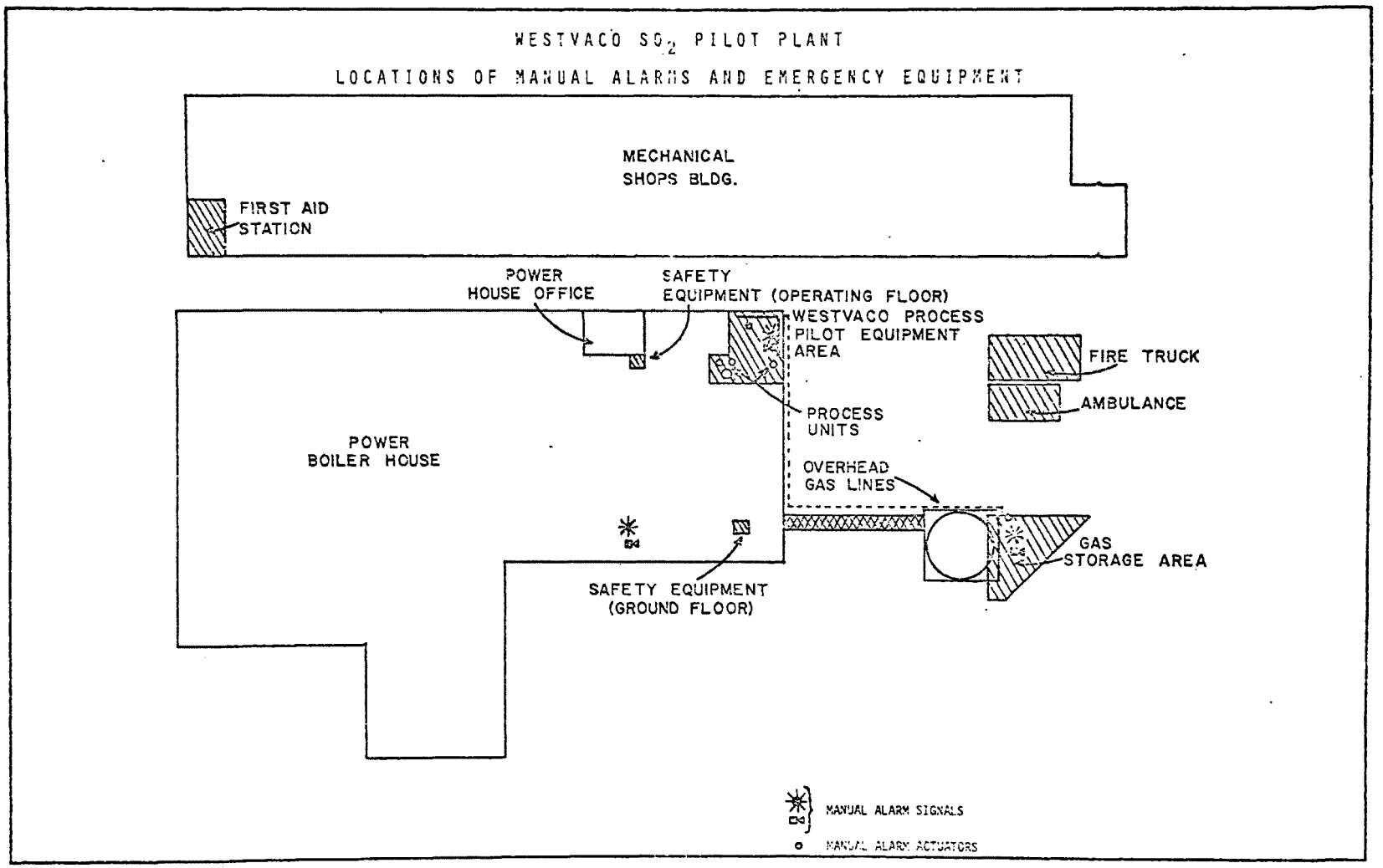
WESTVACO SO_2 PILOT PLANT
LOCATIONS OF MANUAL ALARMS AND EMERGENCY EQUIPMENT
MECHANICAL SHOPS BLDG.
FIRST AID STATION
POWER HOUSE OFFICE
SAFETY EQUIPMENT (OPERATING FLOOR)
WESTVACO PROCESS PILOT EQUIPMENT AREA
FIRE TRUCK
AMBULANCE
PROCESS UNITS
POWER BOILER HOUSE
OVERHEAD GAS LINES
GAS STORAGE AREA
SAFETY EQUIPMENT (GROUND FLOOR)
MANUAL ALARM SIGNALS
MANUAL ALARM ACTUATORS

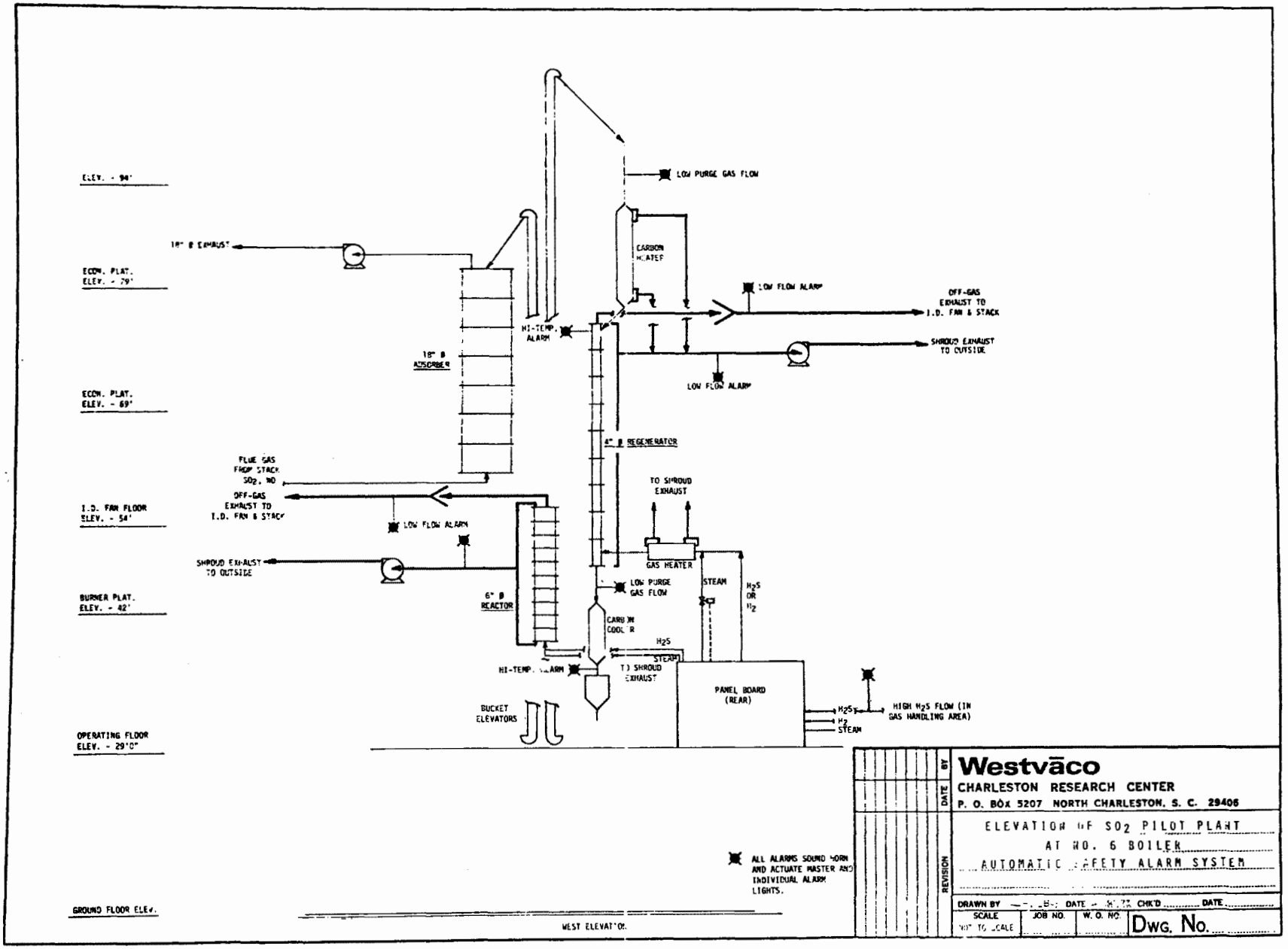

REVISION	DATE	BY

Westvaco
CHARLESTON RESEARCH CENTER
P. O. BOX 5207 NORTH CHARLESTON, S. C. 29406

ELEVATION OF SO_2 PILOT PLANT
AT NO. 6 BOILER
AUTOMATIC SAFETY ALARM SYSTEM

DRAWN BY [illegible] DATE [illegible] CHK'D ..... DATE .....
SCALE NOT TO SCALE | JOB NO. | W. O. NO. | DWG. No.

the coal storage hopper and the cooling tower as shown. The equipment consists of an 18 inch SO_2 sorber and 4 inch diameter and 6 inch diameter regenerators. The equipment extends from the operating floor to approximately the 105 ft. level. A panel board located on the operating floor is used to monitor and control the equipment. Associated materials handling equipment is also in the area.

The following safety items are associated with the equipment:

1. General Alarm

   Alarm horns and flashing lights are located at the SO_2 panel board, in the gas storage area and near the panel board for No. 6 boiler as indicated in the plot plan drawing. The alarms can be activated by push buttons on the panel board or in the gas storage area. The horns can be silenced by buttons at each location, but the flashing lights can only be deactivated by a button at the SO_2 panel board.

2. Automatic Alarms

   Several automatic alarms are incorporated into the system. When actuated a horn sounds and a master alarm light comes on. In addition a labeled pilot light is actuated.

   a) Exhaust Gas Flow

      If the exhaust flow rate drops below a pre-set value all gases except nitrogen are shut off and an alarm is sounded. All gases can also be turned off manually by a switch on the panel board. A steam purge can be put into the equipment by turning a switch on the panel board. If the shroud exhaust flow drops below a pre-set value the alarm system is actuated.

   b) High Temperature

      In case of high temperature in the regenerator or carbon cooler, an alarm is sounded and a light comes on at the panel board. All heaters can be turned off by a switch on the panel board.

   c) Low Seal Leg Flow

      If there is low purge gas flow in the upper or lower seal legs which could allow hydrogen leakage, an alarm sounds and a light comes on at the panel board.

   d) High H_2S Flow

      If there is high flow in the H_2S line the alarm system is actuated.

3. Safety Equipment

Canister gas masks, oxygen cylinders, and manual resuscitators are located in cabinets on the operating floor near the power plant office and on the ground floor adjacent to the southeast entry door. A Scott Air-Pak is located in the ground floor cabinet.

4. Various Detectors for Hazardous Gases

Portable leak, combustibles, H_2S, SO_2 and NO detectors are centrally located in the panel board area. The detectors are discussed later as they relate to particular gases and the operation of these instruments are described in Appendix II.

5. 18 Inch SO_2 Sorber

The 18 inch SO_2 sorber treats flue gas from No. 6 boiler stack. The unit is equipped with an exhaust system to dilute and expel to the outside the off gases from the unit.

6. 8" Ø Sulfur Generator

The 8 inch sulfur generator will use hydrogen sulfide laden reactant gas. It is equipped with an exhaust system tied to the suction side of No. 6 boiler I.D. fan.

7. 4 Inch Regenerator

The four inch regenerator will use both hydrogen and hydrogen sulfide laden reactant gas. It is equipped with an exhaust system tied to the suction side of No. 6 boiler I.D. fan. It is equipped with an exhaust hood to pick up, dilute and expel to the outside any gases leaking from the equipment.

8. Gas Storage Area

The gas storage area has a concrete area for gas storage and handling. The hydrogen sulfide and hydrogen lines cannot be used until lock valves are opened with keys kept at the panel board for No. 6 boiler when not in use. The H_2S line has a flow switch which shuts the gas off in case of excess flow and a 75 psig rupture disc and vent line which exhausts into the cooling tower.

HYDROGEN SULFIDE

Physical Properties

The major hazards in the using of hydrogen sulfide arise from its toxicity and flammability. Therefore, the gas should be used in a well-ventilated area. Oxygen, flames, sparks, and sources of excessive heat should be kept out of the area in which H_2S is stored and used.

Toxicity

Hydrogen sulfide is a gas that is extremely toxic at low concentrations. The gas is colorless and has a characteristic rotten-egg odor at relatively low concentrations (1 - 500 ppm). At higher concentrations the odor is sickening-sweet. Although the odor of hydrogen sulfide can be detected at very small amounts, the sense of smell is reduced by continued exposure. Above 100 ppm H_2S rapidly paralyzes the olfactory nerve so that the gas is no longer smelled.

Flammability

H_2S is flammable for the concentration range of 4.3 to 45%. A mixture of two volumes H_2S and 3 volumes oxygen will explode violently when ignited.

Physiological Effects of Hydrogen Sulfide

The principal mode of entry of H_2S into the body is through the lungs. Skin contact even to high concentrations is not considered significant. There are three principal effects from exposure to H_2S:

1) The irritant action of relatively high concentrations on lung tissue
2) An irritant effect on the eyes which may result from repeated exposures to low concentrations, as well as short exposures to high concentrations
3) The most significant effect--respiratory paralysis from exposure to high concentrations.

Symptoms

Symptoms that occur because of exposure to hydrogen sulfide include: 1) headache, 2) dizziness, 3) nausea, 4) dryness and sensation of pain of the nose and throat, and 5) coughing. These symptoms occur with exposure at low (500 ppm) concentrations. At higher concentrations, exposure rapidly produces unconsciousness, cessation of respiration, and death. It should be noted that the majority of accidents from H_2S exposure resulted when the victim failed to follow recommended rules and procedures. Also, H_2S and prior consumption of alcohol are a dangerous combination. Cases of exposure have shown that it took very little exposure to the gas to overcome a person who had consumed alcohol 16 - 24 hours before exposure.

Responses to Various Concentrations of Hydrogen Sulfide

The responses to various concentrations of H_2S in the atmosphere are as follows:

1. The maximum allowable concentration for prolonged exposure (8 hours) is 10 ppm. Slight irritation of the eyes may occur at concentrations as low as 10 ppm.

2. The minimum concentration for lung irritation is greater than 20 ppm.

3. The maximum concentration for 1 hour without serious consequences is 170 - 300 ppm.

4. A concentration of 300 - 500 ppm is dangerous after 1/2 to 1 hour exposure, and

5. Concentrations greater than 500 ppm rapidly produce unconsciousness, cessation of respiration and death.

Present information indicates that hydrogen sulfide is non-cumulative in the body.

Location and Operation of Regenerator Equipment

Regenerator Unit

The pilot equipment is located in the northeast corner of the building housing No. 6 boiler and extends from the operating floor (29' level) to the 115 ft. level. The area is shaded on the attached plot plan drawing on page 2.

Hydrogen Sulfide Cylinders

Hydrogen sulfide cylinders are located in the gas handling area adjacent to the cooling tower and coal storage hopper. The area is shaded on the plot plan on page 2. Hydrogen sulfide in amounts up to 1500 - 2,000 lbs. will be stored in this area.

Operation of Equipment

The equipment will be operated both on a 16 hrs./day and on an around-the-clock basis. At least two operators will be on duty during each shift. In addition, a supervisor will be in the general area during operation.

Protective Measures for Operating Personnel

Because of the possibility of H_2S release and the resulting hazards, several safety precautions and devices will be used for personnel protection.

Safety Devices

1. Warning Signs: Signs will be placed at the following locations when H_2S is being used or produced: a) at entrance points to the pilot area, b) gas handling area, c) on hazardous gas lines outside the building.

2. Portable Detectors: Portable detectors for H_2S, explosive gases and point leak testing will be located in the panel board area. In addition, there will be a permanent H_2S detector and alarm in the panel board area.

3. Personal Safety Equipment: Each person working in the area will have on his person: a) a belt clipped escape mask, b) a H_2S detector kit. One person per shift working in the area will have a lead acetate badge which will change color upon exposure to H_2S.

4. General Safety Equipment: There will be general safety equipment cabinets located in marked areas on the operating floor near the office and on the ground floor near the liquid nitrogen cylinders.

These will contain: a) 5 Universal gas masks, b) a Scott Air-Pak self-contained breathing apparatus, c) 2 oxygen masks and 4 oxygen cylinders, d) a hand resuscitator.

5. Exhaust Systems: All equipment is equipped with exhaust systems to dilute and expel toxic gases. Exhaust lines which carry H_2S have alarms to warn of low gas flows. In addition, the 4 inch unit and flanged points on the carbon and gas heaters are equipped with hoods to pick up and exhaust any gas which might escape.

6. Ventilation: Ventilation is provided in the building by air movement to the combustion air inlet for the boiler which is inside the building. Leak tight equipment and exhaust systems are being used to prevent H_2S buildup rather than ventilation.

Safety Procedures

A. "Buddy System" - One person is never to work alone when H_2S is being used or produced in equipment. Also, the two operators are not to work side by side on equipment containing H_2S unless a third person is present. This system will be used so that if one man is overcome, he can be removed from the contaminated area by his buddy.

B. One man on each shift will be responsible for placing the warning signs on equipment, in entrances, etc. before beginning operation. At the end of operation, one man on that shift will be responsible for removing and storing the warning signs. If the signs were in position at all times, whether the equipment was operating or not, other personnel in the area would soon begin to disregard the signs.

C. All operators are to read and understand all aspects of the safety program.

D. If any type of accident or equipment failure occurs, the operator should report this to his supervisor. Even if the incident is an equipment failure which the operator can correct, this should be reported to the supervisor.

Precautions in Handling and Storage of Hydrogen Sulfide

The following general rules should be followed in the handling and storage of hydrogen sulfide:

1. Never drop cylinders or permit them to strike each other violently.

2. Cylinders should be assigned a definite area for storage. The area should be dry, cool, well-ventilated, and preferably fire resistant.

3. The valve protection cap should be left in place until the cylinder has been secured against a wall or bench, and is ready to be used.

4. Avoid dragging, rolling, or sliding cylinders, even for a short distance. They should be moved by using a suitable hand truck.

5. Never tamper with safety devices in valves or cylinders.

6. No part of a cylinder should be subjected to a temperature higher than 125°F.

7. All cylinders should be secured with chains when being used or stored.

Emergency Procedures

Equipment or Gas Supply Leakage

1. At the indication (detector checking or lead acetate paper turns black) that H_2S has reached a dangerous level, put on the escape mask, EVACUATE the area and DO NOT RE-ENTER without a canister type gas mask.

2. Put on a canister type gas mask and shut off the H_2S and H_2 supply in the gas handling area.

3. Call supervisor. Use the telephone located in the power plant office.

4. Before re-entering contaminated area, put on a MSA Universal gas mask.

5. Check concentration with MSA Universal detector in the following areas: a) panel board area, b) other platform levels of equipment. If concentrations of 150 - 300 ppm exist and do not decrease in 10 - 15 minutes or if concentrations greater than 300 ppm exist, follow Steps 1 - 6 on the following page.

Overexposure or Uncontrollable Leak

If one person is over-exposed or there is uncontrollable leakage:

1. Sound the H_2S alarm.

2. Don the escape mask and EVACUATE the area IMMEDIATELY.

3. Put on gas mask in the safety cabinets located near the office on the operating floor or near the liquid nitrogen tanks on the ground floor.

4. Remove victim upwind of H_2S leak and apply first aid.

5. If breathing has stopped, artificial respiration should be applied.

6. Call the First Aid Squad (Ext. 200) and/or Fire Brigade (Ext. 277) and provide information upon arrival.

HYDROGEN

Physical Properties

Hydrogen is colorless and odorless and the lightest gas known. It is non-toxic but can act as an asphyxiant by displacing the necessary amounts of air required to support life.

Flammability

The major hazard associated with the use of hydrogen is its flammability. Hydrogen is flammable over the range of 4.0 - 75 volume % in air. The auto-ignition temperature is 1085°F. Hydrogen is particularly subject to leakage and will leak at about twice the rate of nitrogen and oxygen. Hydrogen diffuses very rapidly to non-explosive mixtures. For example, if 300 lbs. of liquid hydrogen were spilled in an unconfined area the 50,000 cubic feet of gaseous hydrogen produced would diffuse to a non-explosive mixture in about one minute. Hydrogen flames are invisible except in near darkness. Only the impurities in the flame are visible. Dirt or the dry powder from fire extinguishers have been used to establish the presence of hydrogen flames. The material will glow in the flame.

Location and Operation of Equipment

Hydrogen will be used in the 4 inch diameter regenerator to study H_2S generation with sulfur loaded carbon. The equipment will be operated on both an around-the-clock and 16 hrs./day basis. Hydrogen is supplied from the gas handling area where up to about 5,000 - 6,000 cu. ft. of hydrogen will be stored.

Protective Measures

The following are provided to minimize the possibility for or warn of fires:

1. Exhaust Hood and Lines

   An exhaust hood draws air across the reactor proper and flanged points of the gas and carbon heater to dilute any hydrogen which may leak below the explosive limit and exhaust it. Off gases from the unit are diluted below the explosive limit and expelled to the outside.

2. Explosion Proof Fittings

   Electrical fitting within a five foot radius of heated parts of the 4 inch diameter regenerator are explosion proof.

3. Combustible Gas Detector

   A portable combustible gas detector is supplied to test for suspected leakage of hydrogen that may be forming combustible mixtures.

4. Leak Detector

   A portable thermal conductivity leak detector can be used to locate leakage of hydrogen that may be at levels below the lower combustible level.

Safety Procedures

The following specific rules apply when handling hydrogen:

1. Never use cylinders of hydrogen in areas where flames, excessive heat, or sparks may occur.

2. Utilize only explosion-proof equipment and spark proof tools in areas where hydrogen is handled.

3. Ground all equipment and lines used with hydrogen.

4. Never use a flame to detect hydrogen leaks--use soapy water.

5. Do not store reserve stocks of hydrogen with cylinders containing oxygen, other highly oxidizing or combustible materials.

The following general rules should also be followed in the handling and storage of hydrogen:

1. Never drop cylinders or permit them to strike each other violently.

2. Cylinders should be assigned a definite area for storage. The area should be dry, cool, well-ventilated, and preferably fire-resistant. Keep cylinders protected from excessive temperature rise by storing them away from radiators or other sources of heat. Storage conditions should comply with local and state regulations.

3. Cylinders may be stored in the open, but in such cases should be protected against the extremes of weather and from the dampness of the ground to prevent rusting.

4. The valve protection cap should be left in place until the cylinder has been secured against a wall or bench, or placed in a cylinder stand, and is ready to be used.

5. Avoid dragging, rolling, or sliding cylinders, even for a short distance. They should be moved by using a suitable hand truck.

6. Never tamper with safety devices in valves or cylinders.

7. When returning empty cylinders, close the valve before shipment, leaving some positive pressure in the cylinder. Replace any valve outlet and protective caps originally shipped with the cylinder. Mark or label the cylinder EMPTY. Never store full and empty cylinders together.

8. No part of a cylinder should be subjected to a temperature higher than 125°F. A flame should never be permitted to come in contact with any part of a compressed gas cylinder.

9. Do not place cylinders where they may become part of an electric circuit. When electric welding, precautions must be taken to prevent striking an arc against a cylinder.

Emergency Procedures

1. At the indication that hydrogen is leaking into the building or that a fire has started, a) shut off the hydrogen, b) turn off the heaters, c) leave the nitrogen purge on the equipment, d) if the fire is in the equipment turn on the steam purge, e) extinguish any fires with a dry chemical fire extinguisher. If the fire cannot be extinguished notify the Fire Brigade. After a fire is extinguished the Fire Marshall should be notified. Notify the supervisor in charge.

2. After any fire or leak detection do not turn the hydrogen back on until cleared with the supervising engineer.

3. In case of an explosion, uncontrollable fire, or ruptured cylinders,

   a) Sound the manual alarm.
   b) Evacuate the area immediately.
   c) Call the Fire Brigade (Ext. 277).

d) Shut off all gases in the gas handling area if the explosion or fire is in the building. Leave the nitrogen purge on.
e) Provide information and assistance to the Fire Brigade upon arrival.
f) When it is safe to enter the area, shut off the heaters and carbon flow.

4. If a person is injured apply first aid to prevent shock and control bleeding.

First Aid

In case of an accident and injury:

1. Call for First Aid Squad - Phone 200.

2. Control the bleeding. Apply in order as necessary:

   a) Direct pressure over wound
   b) Pressure point
      1) inner side of upper arm
      2) heel of hand against groin
   c) Tourniquet just above wound. Apply an information note to the victim stating nature of wound (laceration, fracture, puncture wound, etc.), time applied, and your name. Tourniquet should only be removed by a Medical Dept. representative.

3. Start the breathing. Apply mouth-to-mouth resuscitation:

   a) Move injured to clean-air atmosphere.
   b) Remove obstructions in mouth. Clear airway.
   c) Tilt head back and jut chin.
   d) Seal the nose.
   e) Cover mouth with tight seal and breathe.
   f) Rate of breathing is determined by rate of ability of injured to expel air.
   g) Continue mouth-to-mouth resuscitation until help arrives. Do not stop until relieved by another first aider or a Medical Department representative.

4. Treat for possible shock.

   a) Keep injured lying down and calm.
   b) Keep from losing body heat---not too hot or too cool.
   c) Possibly elevate to aid circulation.

SULFUR DIOXIDE

Physical Properties

Sulfur dioxide is a highly irritating, non-flammable, colorless at room temperature and atmospheric pressure. It is a little more than twice as heavy as air. It is soluble in water to form a weak solution of sulfurous acid. It is readily liquefied and is shipped in steel cylinders as a liquefied gas under its own vapor pressure of about 35 psig at 70°F.

Toxicity

Sulfur dioxide is a highly irritating gas in the vapor form, readily detectable in concentrations of 3-5 ppm and providing ample warning of its presence. In higher concentrations, the severely irritating effect of the gas makes it unlikely that any person would be able to remain in such a contaminated atmosphere unless he were unconscious or trapped.

Liquid sulfur dioxide may cause skin and eye burns upon contact with these tissues which results from the freezing effect of the liquid on the skin or eyes.

Acute exposure to sulfur dioxide has the following effects: 8 - 12 ppm causes throat irritation, coughing, constriction of the chest, tearing, and smarting of the eyes; 150 ppm causes extreme irritation and can be tolerated only for a few minutes; 500 ppm is so acutely irritating that it causes a sense of suffocation. There are no known systematic effects of acute exposure to sulfur dioxide. The generally accepted maximum allowable concentration of sulfur dioxide for an 8 hour daily exposure is 10 ppm.

No chronic systematic effects have been observed in workers exposed daily to allowable concentrations of sulfur dioxide.

Location and Operation of Equipment

The 18 inch adsorber is used to study SO_2 sorption with active carbon. Flue gas from the stack of No. 6 boiler which normally contains 1,000 - 2,000 ppm SO_2 is used. In addition SO_2 may be added from cylinders in the gas handling area. The adsorber is equipped with an exhaust system to dilute and expel off gases outside the building.

Protective Measures

The irritating effect of sulfur dioxide is readily detectable and provides ample warning of its presence. In addition a Universal type portable detector is provided to test for possible leakage or buildup of sulfur dioxide.

Precautions in Handling and Storage

The following general rules should be observed in the handling and storage of sulfur dioxide:

1. Never drop cylinders or permit them to strike each other violently.

2. Cylinders should be assigned a definite area for storage. The area should be dry, cool, well-ventilated, and preferably fire-resistant. Keep cylinders protected from excessive temperature rise by storing them away from radiators or other sources of heat. Storage conditions should comply with local and state regulations.

3. Cylinders may be stored in the open, but in such cases should be protected against extremes of weather and from the dampness of the ground to prevent rusting. During the summer, cylinders stored in the open should be shaded against the continuous direct rays of the sun in those localities where extreme temperatures prevail.

4. The valve protection cap should be left in place until the cylinder has been secured against a wall or bench, or placed in a cylinder stand, and is ready to be used.

5. Avoid dragging, rolling, or sliding cylinders, even for a short distance. They should be moved by means of a suitable hand truck.

6. Never tamper with safety devices in valves or cylinders.

7. When returning empty cylinders, close the valve before shipment, leaving some positive pressure in the cylinder. Replace any valve outlet and protective caps originally shipped with the cylinder. Mark or label the cylinder EMPTY. Do not store full and empty cylinders together.

8. No part of a cylinder should be subjected to a temperature higher than 125°F. Temperatures in excess of 125°F may cause a cylinder to become liquid full resulting in excessive hydrostatic pressure buildup. Never permit a flame to come in contact with any part of a compressed gas cylinder.

9. Before using, read all label information and data sheets associated with the use of sulfur dioxide.

10. Suckback may cause a violent reaction within the cylinder, and may leak to the formation of extremely corrosive conditions; therefore, to prevent suckback, a check valve, vacuum break, or trap should be employed when using sulfur dioxide.

11. Contents should be determined by weight, since the cylinder pressure will remain constant as long as liquid sulfur dioxide remains in the cylinder.

Leak Detection

Leaks of sulfur dioxide in lines or equipment may be located by passing a squeeze bottle of aqueous ammonia over sites of suspected leaks; dense white fumes will be formed near the leak. Leaks may be less easily located by appling oil or soapy water solution to joints; leaks will be evident by bubble formation.

First Aid Suggestions

Call First Aid (Ext. 200) immediately for anyone who has had contact with liquid sulfur dioxide or has been exposed to excessive concentrations of the gas. Prior to the physician's arrival, first aid should be started at once. The first aid suggestions presented below are believed to be common practice in industry. Their adoption in any specific case should be subject to the prior endorsement of a competent medical advisor.

Skin Contact

On skin contact with liquid sulfur dioxide, use an emergency safety shower at once. Clothing and shoes contaminated with sulfur dioxide should be removed under the shower. Sulfur dioxide should be washed off with very large quantities of water. Wash skin areas with large quantities of soap and water. Do not apply salves or ointments to chemical burns for 24 hours.

Eye Contact

If liquid sulfur has entered the eye, they should be washed promptly with copius quantities of water for at least 15 minutes. Chemical neutralizers are not advisable. It is advisable to irrigate the eyes gently with water at room temperature in order to minimize additional pain and discomfort. Refer at once to a physician, preferably an eye specialist.

Inhalation

On exposure to excessive concentrations of gaseous sulfur dioxide, the victim must be carried at once to an uncontaminated atmosphere and effective artificial respiration started immediately if breathing has ceased. Oxygen (100%) should be administered (by trained personnel only) as soon as possible after a severe exposure, preferably against a positive exhalation pressure of 1.25 inches of water. Oxygen inhalation must be continued as long as necessary to maintain the normal color of the skin and mucous membranes. In cases of severe exposure, the patient should breathe 100% oxygen under positive exhalation pressures for 0.5 hour periods every hour for at least 3 hours. If there are no signs of lung congestion at the end of this period, and if the breathing is easy and the color is good, oxygen inhalation may be discontinued. Throughout this time, the patient should be kept comfortably warm, but not hot.

NITRIC OXIDE

Physical Properties

Nitric oxide is a colorless, toxic, non-flammable gas, rapidly oxidized by the oxygen of the air to nitrogen dioxide. It is shipped in cylinders as a non-liquefied gas at a pressure of 500 psig at 70°F.

Toxicity

Nitric oxide is an extremely toxic gas. It is rapidly converted by the oxygen of the air to nitrogen dioxide (NO_2). Thus, in most cases of exposure to nitric oxide, the individual is being actually exposed to NO_2. The recommended (American Conference of Governmental Industrial Hygienists) maximum acceptable concentration of NO_2 in air is 5 ppm.

The greatest hazard of exposure to NO_2 comes from the fact that its serious effects are not felt until several hours after the exposure in spite of the fact that dangerous amounts may be breathed before any real discomfort occurs. Edema may develop within 6 - 24 hours after such exposure. Concentrations of 100 - 150 ppm are dangerous for exposures of 30 - 60 minutes and concentrations of 200 - 700 ppm may be fatal after even very short exposures.

Chronic exposure to low concentrations may cause chronic irritation of the respiratory tract, with cough, headache, loss of weight, loss of appetite, dypepsia, corrosion of the teeth, and gradual loss of strength.

Location and Operation of Equipment

Nitric oxide is present at concentrations of about 150 ppm in the flue gas from No. 6 boiler used in the 18 inch SO_2 sorber. Occasionally a cylinder of nitric oxide may be used in the building and will be marked.

Detectors

The Universal type portable gas detector can be used to test for suspected concentrations of nitric oxide.

Precautions in Handling and Storage

1. Nitric oxide should be handled only in a well-ventilated area, preferably a hood with forced ventilation.

2. Self-contained breathing apparatus should be available in convenient locations in emergencies.

3. Areas in which nitric oxide is being handled should be provided with enough exits to permit personnel to leave quickly in case of trouble.

4. Personnel should have available for immediate use gas masks with Universal canisters (Type N, colored red) for emergencies. These canisters are satisfactory only for short exposures (about 5 minutes for 2% concentration of NO_2, 26 minutes for concentrations of 0.5%) and should be changed on an exact time schedule.

5. Air contamination should be avoided in high pressure reactions of nitric oxide with organic compounds. Air contamination would lead to the formation of nitrogen dioxide which could cause an ignition or detonation.

The following general rules should apply in the handling and storage of nitric oxide:

1. Never drop cylinders or permit them to strike each other violently.

2. Cylinders should be assigned a definite area for storage. The area should be dry, cool, well-ventilated, and preferably fire-resistant. Keep cylinders protected from excessive temperature rise by storing them away from radiators and other sources of heat. Storage conditions should comply with local and state regulations.

3. Cylinders may be stored in the open but in such cases should be protected against extremes of weather and from the dampness of the ground to prevent rusting. During the summer, cylinders stored in the open should be shaded against the continuous direct rays of the sun in those localities where extreme temperatures prevail.

4. The valve protection cap should be left in place until the cylinder has been secured against a wall or bench, or placed in a cylinder stand, and is ready to be used.

5. Avoid dragging, rolling, or sliding cylinders, even for a short distance. They should be moved by means of a suitable hand truck.

6. When returning empty cylinders, close the valve before shipment, leaving some positive pressure in the cylinder. Mark or label the cylinder EMPTY. Do not store full and empty cylinders together.

Leak Detection

Small leaks of nitric oxide in lines or equipment may be detected by means of wet blue litmus paper. Sites of large leaks of nitric oxide are also detectable by the formation of reddish-brown NO_2 where nitric oxide contacts the atmosphere.

First Aid Suggestions

Anyone exposed to dangerous concentrations of nitric oxide (rapidly converted to NO_2 by the oxygen of the air) or overcome by gas should be placed immediately in the care of a physician. Prior to the physician's arrival, first aid should be started. Those presented below are believed to be common practice in industry. Their adoption in any specific case should be subject to the prior endorsement of a competent medical advisor.

1. Persons suspected of exposure to dangerous concentrations of the gas should be given bed rest for 24 hours and kept under observation during this period because of the dangers of developing edema.

2. Anyone suffering from nitric oxide poisoning should be given 100% oxygen if breathing has not stopped or 100% oxygen with artificial respiration, manual or otherwise, if breathing has stopped. No one who has been exposed to nitric oxide should be allowed to move until permitted to do so by the attending physician.

3. If the person collapses after exposure, he should be moved to fresh air and kept warm. The victim should be laid face down with his head and chest lower than his hips to improve drainage of fluid from the lungs. The body can be inclined to about a 15 or 20 degree angle. Artificial respiration should be started right away. If possible, oxygen should be administered simultaneously with an inhalator or resuscitator.

4. The chances of developing edema will be considerably reduced if oxygen is administered with an exhalation back-pressure of 2 - 2.5 inches of water. If the oxygen is bubbled through ethyl alcohol as it is administered, any frothing likely in the lungs will be lessened.

5. If a person exposed to nitric oxide commences to cough, has difficulty breathing, or feels slightly fatigued, he should be given oxygen immediately. A physician should be called. If it is necessary to move the victim, he should be carried on a stretcher. In no case should he be allowed activity.

APPENDIX

SECTION C

DETAILS OF PROCESS COMMERCIALIZATION

APPENDIX C-1

1,000 MW UTILITY BOILER FLUE GAS CLEAN-UP - DETAILED ECONOMIC EVALUATION

MAIN PLANT ITEMS FOR FACTOR ESTIMATE

(MPI)

Designation	Unit Cost	No. Req'd.	Total Cost
Adsorber	$505,000	4	$2,020,000
Regenerator (S Generator)	$ 94,800	4	379,200
Regenerator (H_2S Gen./S Stripper)	$181,000	4	724,000
Carbon Cooler	$ 29,800	4	119,200
Blowers	$109,500	4	438,000
	$ 47,000	4	188,000
	$ 4,000	12	48,000
Electric Motors	$ 96,000	4	384,000
	$ 9,600	4	38,400
	$ 350	12	4,200
Heat Exchangers	$ 14,000	4	56,000
	$ 11,200	4	44,800
	$ 11,200	4	44,800
	$ 11,200	4	44,800
Fired Heaters	$ 19,000	4	76,000
Carbon Storage	$ 24,400	4	97,600
Sulfur Storage	$ 50,000	4	200,000
Cyclone Collectors	$111,000	4	444,000
	$ 16,000	4	64,000
	$ 8,200	4	32,800
Bucket Elevators	$ 21,600	8	172,800
	$ 8,230	4	32,900
	$ 14,500	2	29,000
	$ 15,700	4	62,800
	$ 14,900	4	59,600
	$ 14,000	2	28,000
Belt Conveyors	$ 5,000	2	10,000
	$ 12,300	2	24,600
	$ 11,800	2	23,600
	$ 2,300	4	9,200
	$ 4,700	4	18,800
Shift Reactor	$ 36,500	4	146,000
		138	$6,065,100

MPI = Average Cost in 1974 = $43,950

MPI = Average Cost in 1958 = $27,800

BATTERY LIMIT FACTOR ESTIMATE

TITLE: WESTVACO SO_2 RECOVERY PROCESS - 1,000 MW UTILITY BOILER FLUE GAS CLEAN-UP				DATE: August 20, 1974	
Number of MPI's	Cost Indexes 1958	Cost Indexes 1974		Factor	Estimated Cost
134	229	362			
Average Cost of MPI's in 1958 = $27,800 MPI (Main Plant Items) - See Separate List MUE (Miscellaneous Unlisted Equipment)				Est. 20%	$ 6,065,100 1,213,000
Basic Equipment (MPI + MUE)					7,278,100
Field Erection of Basic Equipment	High - Large Pct. of Equip. Involving Field Labor, Large Equipment			14	
Equipment Foundations & Structural Supports	High Predominance of Mild Steel Equip., Large Fans, Large Equip.			8	
Piping	High - Gas Handling Significant Amt. of Large Ductwork			34	
Insulation - Equipment	High - Significant Lagging Regen. & Shift Reaction at High Temperature			5	
- Piping	High - Significant Piping, High Temperature			5	
Electrical	Mild Steel Equip., Heavy Drives, Solids			8	
Instrumentation	Avg. Instrumentation Required, Solids Handling			12	
Miscellaneous	Large Process, Top of Range			6	
Buildings Architectural Structural	Open Air Plant with Minor Buildings - Use of Middle of Range			8	
Building Services (% of Arch'l & Struct.)	Low Amount of Building Services - Open Air			1.4	
Compressed Air	5		17%		
Electrical Lighting	9				
Sprinklers	-				
Plumbing	1				
Heating	2				
Vent & Air Cond.	0				
Total Services	17				
TOTAL FACTORED ITEMS				101	7,350,900
Direct Cost of Adsorber-Regenerator Battery Limit (Excl. Taxes and Cat.)					14,629,000
Addn'l Battery Limit Items Carbon Feeder, Inert Gas Generator Gasifier, Gasifier Scrubber, Fired Gas Heaters & Flue Gas Ductwork					5,611,800
TOTAL DIRECT COST - BATTERY LIMIT					$20,240,800

SUMMARY SHEET FOR FACTOR ESTIMATING

TITLE: WESTVACO SO_2 RECOVERY PROCESS - 1,000 MW UTILITY BOILER FLUE GAS CLEAN-UP		DATE: August 20, 1974
	Factor	Estimated Cost
Direct Cost of Battery Limit		$20,240,800
Storage and Handling (Included in B/L, but Added Min. Add.)	2	404,800
Utilities Battery Limit Add'n, Steam and Elec. Available from Existing Power Station - Use Low B/L	3	607,200
Services Battery Limit Add'n, Minimal Services Required	3	607,200
TOTAL BATTERY LIMIT + AUXILIARIES		$21,860,000
Catalyst Activated Carbon: [Adsorber + Regenerator + 6 Hr. Inventory] (12 hrs.)(172 TPH)(800/T)		1,651,200
Shift: (2,000 $ft.^3$)($26/$ft.^3$)		52,000
TOTAL DIRECT COST		$23,563,200
Indirect Costs Engineering & Supervision Construction Expense Contractor's Fee Contingency	Factor of Direct Costs	14 10 4 20
		11,310,300
TOTAL DIRECT & INDIRECT INSTALLED COST		$34,873,500

COST ESTIMATE

Item No.	Name	Number Req'd.	Description	Comments	Purchased Unit Cost	Total Cost
			CLASS FB - TOWERS			
FB-101 A,B,C,D	SO_2 Adsorber	4	55'Øx61' High, 1/2"-1/8" Thick Carbon Steel; 5 Trays, 1/4" Thick, 410 SS	Factored from Chat. Tank Co. Quote	$505,000	$2,020,000
FB-102 A,B,C,D	S Generator	4	11.3'Øx56' High, 1/4" Thick Alonized 304 SS; 11 Trays, 1/8" Thick Alonized 304 SS	Factored from Chat. Tank Co. Quote w/Alonizing Used Based on Cost from Alon Proc., Inc.	$ 94,800	$ 379,200
FB-103 & 104 A,B,C,D	H_2S Gen./Sulfur Stripper	4	20.5'Øx38' w/Top Section 18.6'Ø x12', 1/4" Thick Alonized 304 SS; 8 Trays, 1/8" Thick Alonized 304 SS	Factored from Chat. Tank Co. Quote with Alonizing Used Based on Quote from Alon Proc., Inc.	$181,000	$ 724,000
FB-105 A,B,C,D	Carbon Cooler	4	14.5'Øx12' High, 1/4" Thick 502 SS with one 1/8" Thick 304 SS Tray	Factored from Chat. Tank Co. Quote	$ 29,800	$ 119,000
			CLASS S - DRUMS			
S-102 A&B	Fresh & Regen. Carbon Storage	2	28'Øx60' Vertical Cone Bottom Tank	Carbon Steel; Factored from Chat. Tank Co. Quote	$ 24,400	$ 48,800
S-101 A&B	Acid Ladened Carbon Storage	2	28'Øx60' Vertical Cone Bottom Tank	Carbon Steel; Factored from Chat. Tank Co. Quote	$ 24,400	$ 48,800
SP-101 A,B,C,D	Molten Sulfur Storage	4	39'Øx35' Vertical Carbon Steel Tank, Steam Traced	Literature	$ 50,000	$ 200,000

(Cont'd)

COST ESTIMATE (CONTINUED)

Item No.	Name	Number Req'd.	Description	Comments	Purchased Unit Cost	Total Cost
			CLASS U - MATERIAL HANDLING			
CR-101 & 102 A,B,C,D	Carbon Feed Rate Controller	8	42 T/Hr. Gravimetric Digital Control Belt Feeder	Factored from K-TRON Corp. Quote	$ 18,100	$ 144,800 B/L
U-101 A,B,C,D	Bucket Elevator	4	42' High Bucket Elev. To Transport C from Hopper to SO_2 Sorber	Literature	$ 8,230	$ 32,900
U-102 A&B	Bucket Elevator	2	88' High Bucket Elev. To Transport C from SO_2 Sorber to Hopper	Literature	$ 14,500	$ 29,000
U-103 A,B,C,D	Bucket Elevator	4	100' High Bucket Elev. To Transport C from Hopper to S Generator	Literature	$ 15,700	$ 62,800
U-104 A,B,C,D	Bucket Elevator	4	92' High Bucket Elev. To Transport C to S Generator	Literature	$ 14,900	$ 59,600
U-105 A,B,C,D	Bucket Elevator	2	83' High Bucket Elev. To Transport Regen. C to Hopper	Literature	$ 14,000	$ 28,000
U-106 A&B	Belt Conveyor	2	2' Wide x 48' Long Belt Conv. To Transport Make-up C to Storage Hopper	Literature	$ 5,000	$ 10,000
U-107 A&B	Belt Conveyor	2	2' Wide x 91'+41' Long Belt Conv. To Transport C from Hopper to SO_2 Sprber	Literature	$ 12,300	$ 24,600

(Cont'd)

COST ESTIMATE (CONTINUED)

Item No.	Name	Number Req'd.	Description	Comments	Purchased Unit Cost	Total Cost
			CLASS U - MATERIAL HANDLING (CONT'D)			
U-108 A&B	Belt Conveyor	2	2' Wide x 66'+ 18'+22' Long Belt Conv. To Transport C from Hopper to SO_2 Sorber	Literature	$ 11,800	$ 23,600
U-109 A,B,C,D	Belt Conveyor	4	2' Wide x 14' Long Belt Conv. To Transport Spent C to S Generator	Literature	$ 2,300	$ 9,200
U-110 A,B,C,D	Belt Conveyor	4	2' Wide x 18' Long Belt Conv. To Transport Regen. C to Hopper	Literature	$ 4,700	$ 18,800
			CLASS C - CONVERTERS			
CV-101 A,B,C,D	Shift Converter	4	Shift 1600 # moles/hr. of Producer Gas	Based on Information from Girdler Catalysts	$ 36,500	$ 146,000
			CLASS X - EXCHANGERS			
X-101 A,B,C,D	Steam Heater for Sulfur Generator Inlet Gas	4	3.6 MM BTU/hr., Steam Heated	750 $ft.^2$	$ 14,000	$ 56,000
X-102 A,B,C,D	H_2O Condenser for Inlet Gas to S Generator	4	27.9 MM BTU/hr., Air Cooled Alonized Shell & Tube	2500 $ft.^2$	$ 11,200	$ 44,800
X-104 A,B,C,D	S Condenser	4	25.7 MM BTU/hr., Alonized Shell & Tube	2500 $ft.^2$	$ 11,200	$ 44,800
X-103 A,B,C,D	H_2O Condenser for C Cooler Gas Recycle	4	24 MM BTU/hr., Shell & Tube	2500 $ft.^2$	$ 11,200	$ 44,800

(Cont'd)

COST ESTIMATE (CONTINUED)

Item No.	Name	Number Req'd.	Description	Comments	Purchased Unit Cost	Total Cost
			CLASS F - BLOWERS AND PUMPS			
F-101 A,B,C,D	Flue Gas Blower	4	438,000 SCFM, 6,837 Hp To Boost Press. to 45"W.G.; Heavy Duty	Factored from Buffalo Forge Blower Quote	$206,000	$ 824,000
F-105 A,B,C,D	Regeneration Gas Blower	4	19,984 CFM @ 152" W.G. @ 150°F Inlet Temp.; Heavy Duty, Rotary Gas Pump, 684Hp	Factored from Sutorbilt Quote	$ 56,600	$ 226,400
F-103, 104 & 105 A,B,C,D	Air Blower for Gas Heaters	12	1,000 CFM @ 3 PSI Rotary-Blower, 25 Hp	Factored from Sutorbilt Quote	$ 4,400	$ 52,800
			CLASS M - SEPARATORS			
M-101 A,B,C,D	Dust Collector	4	Cluster Clones, Fisher-Klosterman, 470,000 SCFM @ 200°F, 2.5" H_2O Press. Drop, Carbon Steel	Fisher-Klosterman Quote	$111,000	$ 444,000
M-102 A,B,C,D	Cyclone-Sulfur Generator	4	Fisher-Klosterman Cyclone, 13,500 SCFM @ 250°F, 304SS, $\Delta P = 2.5"$ H_2O	Fisher-Klosterman Quote	$ 16,000	$ 64,000
M-103 A,B,C,D	Cyclone - H_2S Generator/S Stripper	8	Fisher-Klosterman Cyclone, 19,700 SCFM @ 1040°F, Alonized 304SS, ΔP =	Fisher-Klosterman Quote Factored for Alonizing Based on Alon Processing Inc. Quote	$ 21,600	$ 172,800
M-104 A,B,C,D	Cyclone-Carbon Cooler	4	Fisher-Klosterman Cyclone, 25,400 SCFM, Carbon Steel, ΔP = 6" H_2O	Fisher-Klosterman Quote	$ 8,200	$ 32,800
M-105 A,B,C,D	Gasifier Scrubbers	4	For McDowell-Wellman Gasifier, Tar Clean-up	McDowell-Wellman Quote	$ 65,000	$ 260,000 B/L

(Cont'd)

COST ESTIMATE (CONTINUED)

Item No.	Name	Number Req'd.	Description	Comments	Purchased Unit Cost	Total Cost
			CLASS G - FIRED HEATERS			
G-102 A,B,C,D	Gas Producer	4	9,581 SCFM, 8,844 # Coal/hr. with Capabilities up to 9900 #Coal/hr. Bituminous Coal	McDowell-Wellman Quote	$260,000	$ 1,040,000 B/L
G-103 A,B,C,D	Start-up Heater for SO_2 Sorber	4	6.8 MM BTU/hr., No. 2 Oil Fired	North American Burner, Double Pipe Heater, Factored Up	$ 19,000	$ 76,000
GH-103 A,B,C,D	Gas Heater for Shift Converter	4	13.1 MM BTU/hr., No. 2 Oil Fired	Process Plant Construction Estimating & Engineering	$ 97,900	$ 391,600 B/L
GH-102 A,B,C,D	Gas Heater for C Preheater	4	17.6 MM BTU/hr., No. 2 Oil Fired	Process Plant Construction Estimating & Engineering	$105,600	$ 422,400 B/L
GH-101 A,B,C,D	Gas Heater for H_2S Generator/S Stripper	4	15.1 MM BTU/hr., No. 2 Oil Fired	Process Plant Construction Estimating & Engineering	$ 97,900	$ 391,600 B/L
G-101 A,B,C,D	Inert Gas Generator	4	60,000 SCFH Capacity Kemp Inert Gas Gen.	Process Plant Construction Estimating & Engineering	$ 24,860	$ 99,440 B/L
			MISCELLANEOUS			
	Ductwork for Flue Gas	1	12x'23' Duct	Factored from Duct Cost for a 550 MW Install. with Bypass	$2,862,000	$ 2,862,000 B/L

APPENDIX C-2

15 MW DETAILED EQUIPMENT DESIGN AND COST

GENERAL DESIGN BASES FOR PROTOTYPE INSTALLATION

A. POWER PLANT

1. Equivalent Size - 15 MW

2. Fuel
   a. Coal
   b. Composition (Wt. %)
      1) Carbon - 55.7%
      2) Oxygen - 6.1%
      3) Hydrogen - 3.9%
      4) Nitrogen - 1.4%
      5) Sulfur - 3.5%
      6) Moisture - 9.4%
      7) Ash - 20%
   c. Heating Value - 11,100 BTU/lb.

3. Combustion Conditions
   a. Excess Air - 22 vol. %
   b. Air-Moisture Content - 60% R.H. @ 80°F
   c. Sulfur Combustion
      1) 98% to SO_2
      2) 2% to SO_3
   d. Sulfur Generator Off-gas Recycle to Boiler - 16% of SO_2 Originating from Coal
   e. Equivalent Coal Firing Rate - 12,714 lbs./hr.

4. Other
   a. Air Heater Inleakage - 7 vol. %
   b. Precipitator Efficiency - 99.5%

B. GENERAL

1. Carbon Properties
   a. Mesh Size - 8x30 (Nominal)
   b. Bulk Density - 40-43 lbs./ft.^{3}
   c. SO_2 Activity - 60 (Minimum)
   d. Attrition No. - 30 (Maximum)

2. Carbon Storage
   a. Make-up - 1 Month's Supply
   b. Regenerated } Total 9 Hours
   c. Acid Loaded }

3. Utilities
   a. Boiler Feed H_2O - 250°F, Saturated
   b. Service H_2O
      1) Temperature - 80°F
      2) Max. Temp. Rise - 40°F
   c. Air
      1) Temperature - 80°F
      2) Moisture - 60% R.H. @ 80°F

C. <u>SO_2 SORBER</u>

1. Inlet Flue Gas Composition
   a. SO_2 - 3,230 ppm
      1) 2,760 ppm from coal
      2) 470 ppm from sulfur generator off-gas recycle
   b. SO_3 - 55 ppm
   c. NO - 280 ppm
   d. O_2 - 4.46 vol. %
   e. H_2O - 10.3 vol. %
   f. CO_2 - 12.6 vol. %
   g. N_2 - 13 vol. %

2. Total Inlet Gas Flow Rate - 29,484 scfm

3. Linear Gas Velocity - 3 FPS @ 170°F

4. Inlet Gas Temperature - 330°F

5. Outlet Gas Temperature - 200°F

6. Column Temperature
   a. SO_3 Removal Stage - 330°F
   b. Avg. SO_2 Stages - 170°F

7. Inlet Carbon Temperature - 77°F

8. Outlet Carbon Temperature - 300°F

9. Inlet Carbon Loading, Residual Sulfur - 0.04 lb. S/lb. C

10. Outlet Carbon Loading, Sulfuric Acid - 0.22 lb. H_2SO_4/lb. C
    Residual Sulfur - 0.04 lb. S/lb. C
    Associated Water - In Equilibrium with H_2SO_4 @ 330°F

11. SO_2 Removal Efficiency - 90% S from Coal

12. Gas Distributor Plate - 8% O.A. with 1/8" Dia. Pucnhed Orifices on 0.42" Δ Centers

D. SULFUR GENERATOR

1. Linear Gas Velocity - 3.0 fps @ 300°F

2. Inlet Gas Temperature - 265°F

3. Inlet Carbon Temperature - 300°F

4. Outlet Carbon Temperature - 300°F

5. Carbon Residence Time - 40 min.

7. No. of Stages/Unit - 11

8. Gas Distributor Plate - 5% O.A. with 1/8" Dia. Punched Orifices on 0.53" Δ Centers

9. Chemistry: 70% Conversion $H_2SO_4 \rightarrow$ Sulfur
15% SO_2 Evolution Recycled to Sorber
15% Unconverted Acid to H_2S Generator/S Stripper

E. H_2S GENERATOR

1. Linear Gas Velocity - 3.0 fps @ 500°F

2. Inlet Gas Temperature - 1300°F

3. Gas Temp. to S Condenser - 900°F

4. Inlet Carbon Temperature - 300°F

5. Outlet Carbon Temperature - 300°F

6. Carbon Residence Time - 30 Minutes

7. No. of Stages/Unit, for Carbon Regeneration - 6
for H_2S Formation - 2

8. Gas Distributor Plate - 5% O.A. with 1/8" Dia. Punched Orifices on 0.53" Δ Centers

9. Chemistry: Sulfur to H_2S by Reaction with H_2
Acid to Sulfur by Reaction with H_2S and/or H_2

F. SULFUR RECOVERY

1. Operating Temperature Range - 260 to 300°F (Lower Temp. Preferred)
2. Sulfur Purity (Bright) - 99.9 wt. % (Minimum)

Major Equipment Design

Integral pilot plant data was used as a basis for major equipment design. The major vessels to be designed are the SO_2 sorber, sulfur generator, and H_2S generator/S stripper. The design procedures used and the results found are given below.

SO_2 Sorber

Diameter

From the power plant a certain flue gas is to be treated. In this case a gas flow rate typical from a base load boiler of 15 MW was taken. The flue gas flow rate was 29,484 SCFM. The diagram of the SO_2 sorber is:

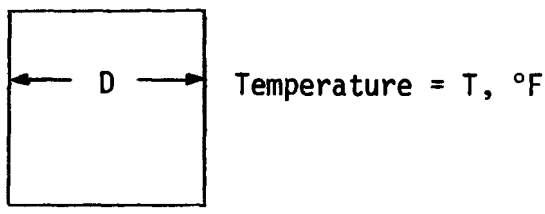

q, Gas Flow Rate
v, Linear Gas Velocity

and, in general:

$$[1] \quad q\left(\frac{SFT^3}{MIN.}\right) = v\left(\frac{FT@T}{SEC.}\right)\left(\frac{60\ SEC}{MIN.}\right)\left(\frac{\pi D^2}{4}\right)FT^2\left(\frac{492}{T+460}\right)\frac{SFT^3}{FT^3@T}$$

or solving for the diameter, D:

$$[2] \quad D = \sqrt{\left(\frac{q}{v}\right)\left(\frac{4}{\pi}\right)\left(\frac{1}{60}\right)\left(\frac{T+460}{492}\right)}$$

It is seen from Equation [2] that the diameter of the vessel is a function of the gas flow rate, q; the linear gas velocity, v; and the temperature, T. The flue gas flow rate is 29,484 SCFM and if a velocity of 3 ft./sec. is

specified at the average temperature 170°F then Equation [2] leads to a SO_2 sorber diameter of:

[3] $$\boxed{D = 16.3 \text{ ft.}}$$

The linear gas velocity was taken as 3 ft./sec. to afford capability of variation from 2 to 4 ft./sec. The temperature was taken as 170°F because this is the average temperature expected during actual operation of the SO_2 sorber.

Space Velocity

The procedure used to design a SO_2 sorber is given in detail in Appendix A-20-5. The highlights of the design procedure are repeated below. The plug flow design equation given by Equation [4] is given

[4] $$\frac{V}{R_{SO_2}} = \int_{F_{vi}}^{F_{vf}} \frac{dF_v}{r_v}$$

where: V = volume of carbon

RSO_2 = molar flow rate

F_v = fractional conversion

r_v = rate of reaction, acid formation

by Levenspiel[23]. The rate expression was determined from experimental results as given by Equation [5]. The molar flow rate of sulfur

[5] $$r_v = \left(\frac{1.59}{10^4}\right) e^{5520/T} \left(1 - \frac{X_v}{0.38}\right) y_{SO_2}^{0.40}\, y_{O_2}^{0.63}\, y_{H_2O}^{0.73}$$

for NO Conc. > 100 ppm

where: r_v = lbs. acid/lb. C/min.

T = temperature, °R

X_v = acid loading, lb. acid/lb. C

y = volume fraction

dioxide, RSO_2, is given by Equation [6] and the fraction conversion, F_v, is

[6] $$R_{SO_2} = \frac{q_T\,(y_{SO_2})_{IN}}{386}$$

where: q_T = inlet gas flow rate

$(y_{SO_2})_{IN}$ = inlet SO_2 concentration, vol. fraction

defined in terms of volume fraction as given by Equation [7]. The volume of

[7] $$F_v = \left(1 - \frac{y_{SO_2}}{(y_{SO_2})_{IN}}\right)$$

carbon is given as the height of carbon times the cross-sectional area of the reactor. Making the substitution into Equation [4] and integrating the design, Equation [8] is obtained for any stage j. In making the integration

[8] $$(y_{SO_2})_{j+1}^{0.6} = (y_{SO_2})_j^{0.6} - (P)(h_j)$$

where: $P = \frac{3.687\,(10^{-4})}{q_T}\left(1 - \frac{(X_v)_j}{0.38}\right) y_{O_2}^{0.63}\, y_{H_2O}^{0.73}\, D^2\, e^{5520/T}$

D = reactor diameter, inches

h_j = settled bed height carbon for j^{th} stage,

plug flow of the gas and backmix of the solid was assumed. A material balance for acid across the jth stage leads to Equation [9]. Then by stage

$$[9] \quad (X_v)_{j+1} = (X_v)_j - \left(\frac{q_T}{386}\right)\left(\frac{98}{R_c}\right)\left[(y_{SO_2})_j - (y_{SO_2})_{j+1}\right]$$

where: R_c = carbon rate, lb. C/hr.

by stage calculations Equations [8] and [9] can be used to design a SO_2 sorber. By taking the conditions given for the SO_2 sorber:

Inlet Flow Rate = 1,909,000 CFH @ 70°F

Inlet Gas Concentration,	SO_2 (+ SO_3)	=	3,285 PPM
	NO	=	280 PPM
	O_2	=	4.46%
	H_2O	=	10.3%
	Inerts (N_2, CO_2)	=	Balance

Outlet SO_2 Concentration = 280 PPM

Average Temperature = 170°F

Outlet Acid Loading on Carbon = 0.22 lb. H_2SO_4/lb. C

Carbon Rate = 6,605 lbs. C/hr.

Diameter = 196 inches (16.3 ft.)

For various assumed bed heights per stage (6, 12 and 18 inches) SO_2 sorber designs were obtained as given in Fig. C-2-1 and Tables C-2-1 to -3. For four stages then the carbon bed depth is 11 inches at a space velocity of 2,350 $ft.^3$ gas/$ft.^3$ C/hr.

Figure C-2-1. Effect of carbon bed/stage on SO_2 sorber design at 3 ft./sec.

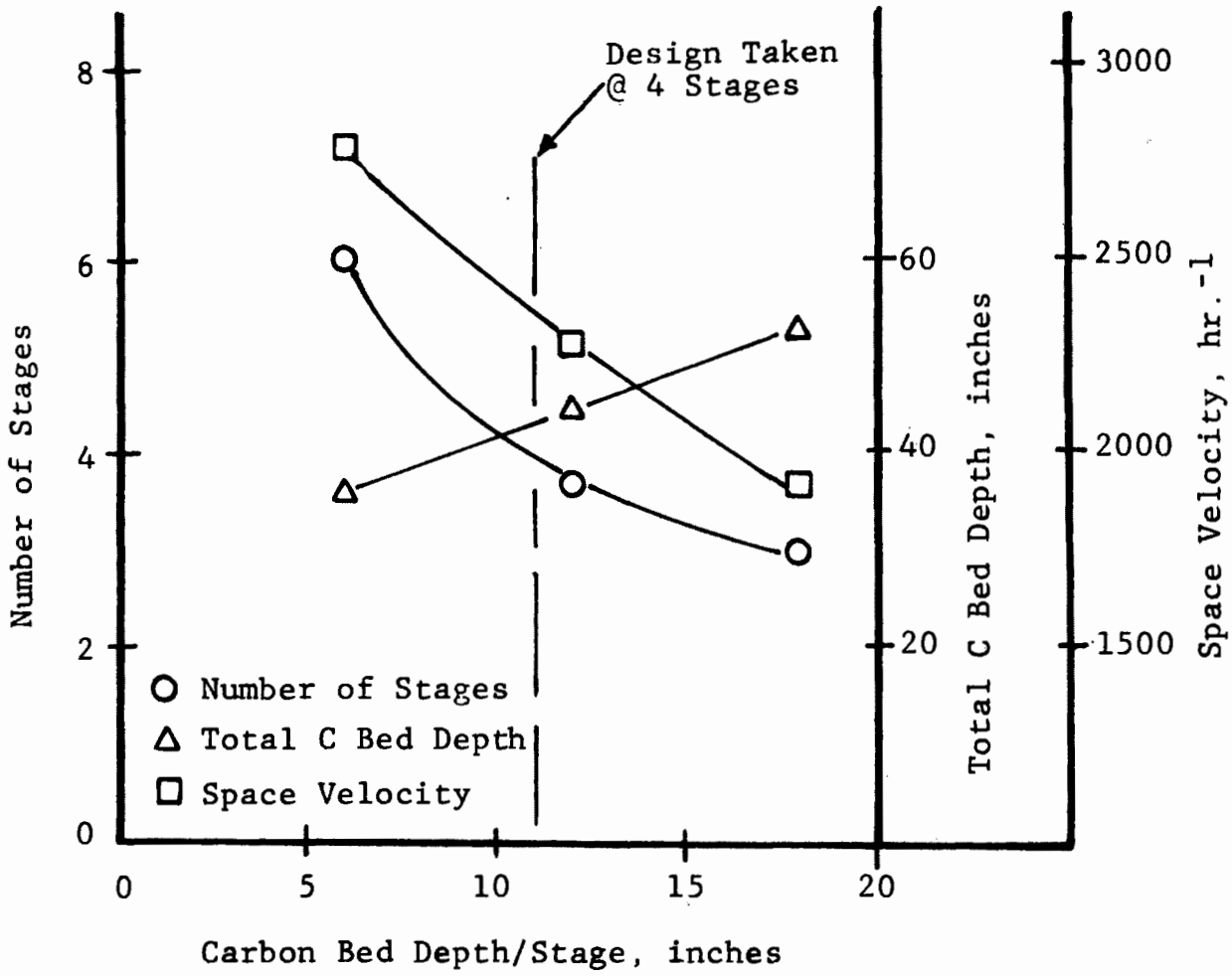

SO2 SCRBER DESIGN

RUN NUMBER GCPD-5 DATE 7 23 74

TOTAL CARBON RATE = 6605.000 LBS/HR
OUTLET CARBON LOADING = 0.22050 LBS ACID/LB CARBON
HEIGHT OF CARBON/STAGE = 12.00 INCHES
DIAMETER OF VESSEL =196.0 INCHES
CARBON USED = 0.
TOTAL GAS FLOW RATE = 1772128. SCFH
INLET SO2 CONCENTRATION = 3285. PPM
INLET NO CONCENTRATION = 280. PPM
INLET O2 VOLUME FRACTION = 0.0446
INLET H2O VOLUME FRACTION = 0.1030
OUTLET SO2 CONCENTRATION = 280. PPM

TEMPERATURE = 170.0 DEG. F

STAGE	SO2 CONCENTRATION PPM	ACID LOADING LBS ACID/LB CARBON
1	3285.	0.2205
2	2274.	0.1463
3	1077.	0.0585
0.71	279.9998	0.0

TOTAL CARBON REQUIRED = 44.54 INCHES
TOTAL STAGES REQUIRED ASSUMING12.00 INCHES CARBON/STAGE = 3.71

SPACE VELOCITY = 2279. 1/HR

PRESSURE DROP ACROSS CARBON = 22.27 INCHES H2O
PRESSURE DROP ACROSS PLATES = 11.13 INCHES H2O
TOTAL PRESSURE DROP ACROSS STAGES = 33.40 INCHES H2O

RATE EXPRESSION USED IN DESIGN CALCULATIONS

RATEC(I)=COEFF * (1-X(I)/XS)**A * (YSO2**B) * (YO2**C) * (YH2O**D)
WHERE COEFF=K * EXP(-E/R*(1/(T+460)))

T=	170.	XS=	0.38	YO2=	0.045	YH2O=	0.103
-E/R=	5520.	A=	1.000	B=	0.400	C=	0.630
K=0.00159							

Table C-2-2

```
SO2 SORBER DESIGN

RUN NUMBER     GCPD-6    DATE  7 23 74

TOTAL CARBON RATE =  6605.000 LBS/HR
OUTLET CARBON LOADING = 0.22050 LBS ACID/LB CARBON
HEIGHT OF CARBON/STAGE =  6.00 INCHES
DIAMETER OF VESSEL =196.0 INCHES
CARBON USED =       0.
TOTAL GAS FLOW RATE = 1772128. SCFH
INLET SO2 CONCENTRATION =      3285. PPM
INLET NO CONCENTRATION =       280. PPM
INLET O2 VOLUME FRACTION = 0.0446
INLET H2O VOLUME FRACTION =  0.1030
OUTLET SO2 CONCENTRATION =     280. PPM

TEMPERATURE = 170.0 DEG. F
            SO2 CONCENTRATION          ACID LOADING
   STAGE          PPM              LBS ACID/LB CARBON
     1            3285.                 0.2205
     2            2761.                 0.1821
     3            2163.                 0.1382
     4            1513.                 0.0905
     5             863.                 0.0428
     6             303.                 0.0017
  0.05         279.9998                 0.0

TOTAL CARBON REQUIRED =      36.28 INCHES
TOTAL STAGES REQUIRED ASSUMING 6.00 INCHES CARBON/STAGE = 6.05

SPACE VELOCITY =    2797. 1/HR

PRESSURE DROP ACROSS CARBON =     18.14 INCHES H2O
PRESSURE DROP ACROSS PLATES =      9.07 INCHES H2O
TOTAL PRESSURE DROP ACROSS STAGES =     27.21 INCHES H2O

   RATE EXPRESSION USED IN DESIGN CALCULATIONS

RATEC(I)=COEFF * (1-X(I)/XS)**A * (YSO2**B) * (YO2**C) * (YH2O**D)
   WHERE COEFF=K * EXP(-E/R*(1/(T+460)))

      T=     170.        XS=     0.38        YO2=    0.045        YH2O=    0.103
    -E/R=    5520.        A=    1.000        B=     0.400          C=     0.630
       K=0.000159
```

Table C-2-3

SO2 SORBER DESIGN

RUN NUMBER GCPD-M DATE 7 23 74

TOTAL CARBON RATE = 6605.000 LBS/HR
OUTLET CARBON LOADING = 0.22050 LBS ACID/LB CARBON
HEIGHT OF CARBON/STAGE = 18.00 INCHES
DIAMETER OF VESSEL =196.0 INCHES
CARBON USED = 0.
TOTAL GAS FLOW RATE = 1772128. SCFH
INLET SO2 CONCENTRATION = 3285. PPM
INLET NO CONCENTRATION = 280. PPM
INLET O2 VOLUME FRACTION = 0.0446
INLET H2O VOLUME FRACTION = 0.1030
OUTLET SO2 CONCENTRATION = 280. PPM

TEMPERATURE = 170.0 DEG. F

STAGE	SO2 CONCENTRATION PPM	ACID LOADING LBS ACID/LB CARBON
1	3285.	0.2205
2	1826.	0.1135
0.96	279.9998	0.0

TOTAL CARBON REQUIRED = 53.23 INCHES
TOTAL STAGES REQUIRED ASSUMING18.00 INCHES CARBON/STAGE = 2.96

SPACE VELOCITY = 1907. 1/HR

PRESSURE DROP ACROSS CARBON = 26.61 INCHES H2O
PRESSURE DROP ACROSS PLATES = 13.31 INCHES H2O
TOTAL PRESSURE DROP ACROSS STAGES = 39.92 INCHES H2O

RATE EXPRESSION USED IN DESIGN CALCULATIONS

RATEC(I)=COEFF * (1-X(I)/XS)**A * (YSO2**B) * (YO2**C) * (YH2O**D)
WHERE COEFF=K * EXP(-E/R*(1/(T+460)))

T=	170.	XS=	0.38	YO2=	0.045	YH2O=	0.103
-E/R=	5520.	A=	1.000	B=	0.400	C=	0.630
K=0.000159							

Sulfur Generator

Diameter

The rate of acid from the SO_2 sorber determines the H_2S required for conversion to sulfur by Equation [10].

$$[10] \qquad H_2SO_4 + 3H_2S \xrightarrow[\text{CARBON}]{\text{ACT.}} 4S + 4H_2O$$

Since the acid loading from the sorber was 0.22 lb. acid/lb. C and the carbon rate was 6,605 lbs. C/hr., then the molar flow rate of acid is 14.8 moles/hr. Based on integral pilot runs to get high H_2S utilization, lower acid conversions were obtained. Seventy per cent of the acid was converted to elemental sulfur in the sulfur generator and 15% was evolved as SO_2; therefore, the molar H_2S requirement is about 31.1 moles/hr. plus the breakthrough of less than 0.1 mole/hr. (99.9% H_2S utilization). The SO_2 is recycled to the sorber, while the remaining acid is converted in the H_2S generator/S stripper. Based on the producer gas an inlet H_2S concentration of 22 volume % is obtainable; therefore, the total inlet gas flow rate into the sulfur generation is given by Equation [11], to yield 50,800 SCFH (847 SCFM). As for the SO_2 sorber,

$$[11] \qquad (Q_T)_{S.G.} = \text{INLET GAS FLOW RATE} = \frac{(31.1 \text{ MOLES } H_2S/\text{HR})(359 \text{ SCF } H_2S/\text{MOLE } H_2S)}{(0.22 \text{ SCF } H_2S/\text{SCF GAS})}$$

Equation [12] evolves relating the reactor diameter to the gas flow rate, linear gas velocity, and column temperature. For a gas flow of 847 SCFM, a gas velocity of 3 ft./sec., and an average temperature of 300°F, the sulfur generator reactor diameter of:

[12] $$\boxed{D = 3.0 \text{ ft.}}$$

The velocity was taken as 3 ft./sec. to allow variability of operation and 300°F is the expected average operating temperature.

Space Velocity

A procedure similar to the one used for desining the SO_2 sorber was used to design the sulfur generator. The plug flow design Equation [4] provided a

$$[4] \qquad \frac{V}{R_{H_2S}} = \int_{(F_{H_2S})_i}^{(F_{H_2S})_f} \frac{dF_{H_2S}}{r_{H_2S}}$$

basis with the same assumptions of plug flow of the gas and backmix of the solid to obtain the design relationship. The rate expression from differential reactor measurements is given by Equation [13]. Then the

$$[13] \qquad r_{H_2S} = 213.8\, e^{-2644/T} (X_V)^{0.67} (y_{H_2S})^{0.58}$$

where: r_{H_2S} = rate H_2S used, moles H_2S/ft.^{3} C/hr.
T = temperature, °R
X_V = acid loading, lb. acid/lb. C
y_{H_2S} = H_2S concentration, volume fraction

molar flow rate Equation [14] and the fraction conversion, Equation [15]

$$[14] \qquad R_{H_2S} = \frac{q_T (y_{H_2S})_{IN}}{386}$$

$$[15] \qquad F_{H_2S} = \left(1 - \frac{y_{H_2S}}{(y_{H_2S})_{IN}}\right)$$

substituted into Equation [4] leads to the design Equation [16]. This

[16] $$(y_{H_2S})_{j+1}^{0.42} = (y_{H_2S})_j^{0.42} - (P)(h)_j$$

where $P = \frac{15.79}{qT} (x_v)_j^{0.67} D^2 e^{-2644/T}$

D = reactor diameter, inches

h_j = settled bed height for j^{th} stage, inches

combined with the material balance, Equation [17]

[17] $$(X_v)_{j+1} = (X_v)_j + 0.08441 \left(\frac{qT}{R_c}\right) \left[(y_{H_2S})_j - (y_{H_2S})_{j+1}\right]$$

where: R_c = carbon rate, lbs. C/hr.

are used to make stage-by-stage calculations. By taking the conditions below:

Inlet Gas Flow Rate = 54,619 ft.^{3}/hr. @ 70°F

Inlet H_2S Concentration = 22.04 vol. %

Outlet H_2S concentration = 0.04 vol. %

Outlet SO_2 Concentration = 1.46 vol. %

Inlet Acid Loading on Carbon = 0.220 lb. acid/lb. C

Outlet Acid Loading on Carbon = 0.033 lb. acid/lb. C

Carbon Rate = 6,605 lbs. C/hr.

Average Column Temperature = 300°F

Column Diameter = 36 inches (3 ft.)

The design procedure was used for various bed heights (5, 10, 15, 17, 20 and 25 inches). The design results are given in Figure C-2-2 and Tables C-2-4 - C-2-9. For 11 stages the settled carbon bed depth/stage was 17 inches at a space velocity of 460 $sft.^3$ gas/$ft.^3$ C/hr.

Figure C-2-2. Prototype sulfur generator design - effect of carbon bed depth/stage

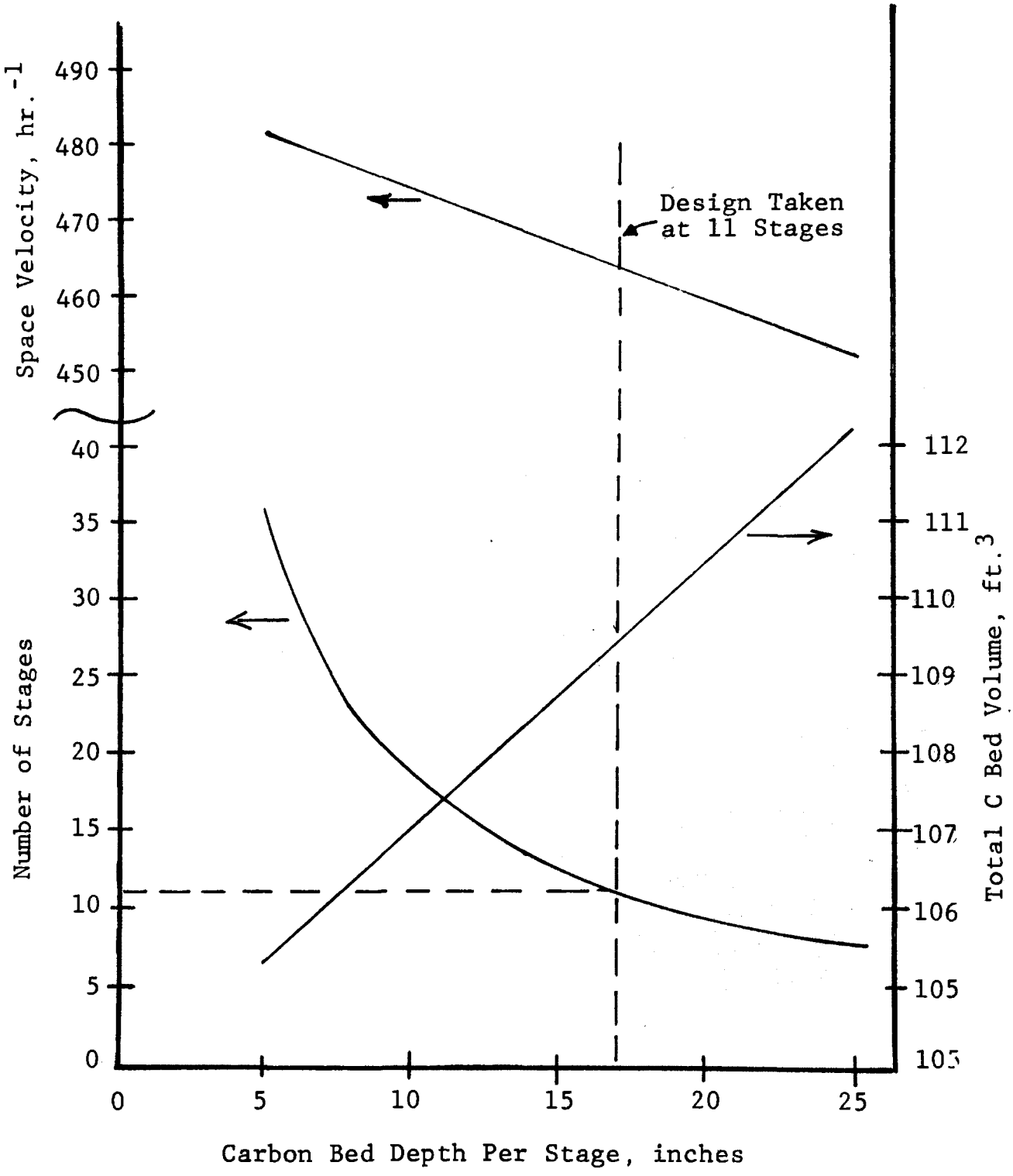

Table C-2-4

SULFUR GENERATION MATERIAL BALANCE

POUNDS OF SULFUR IN = 1472.4521
POUNDS OF SULFUR OUT = 1470.7224

SULFUR GENERATOR DESIGN SG 605

CONTROL VARIABLE, Z = 1.
HEIGHT OF CARBON/STAGE BASED ON SETTLED BED DEPTH, INCHES = 5.0000
DIAMETER OF COLUMN, INCHES = 36.00
TOTAL INLET GAS FLOW RATE, CFH AT 70F. = 54619.00
RATE CONSTANT = 3.8000
MINUS ACTIVATION ENERGY/GAS LAW CONSTANT = -2644.00
TEMPERATURE OF REACTOR = 760.00
ORDER OF REACTION WITH RESPECT TO H2S = 0.5800
ORDER OF REACTION WITH RESPECT TO ACID LOADING = 0.6700
CARBON RATE, LBS/HR = 6605.00
NUMBER OF STAGES WHEN KNOWN FOR Z = 2 = 11.
FRACTION OF INLET ACID LOST AS SO2= 0.1495
YH2SIN = 0.2204
YH2SOUT = 0.0004
XVIN = 0.2200
XVOUT = 0.0326
YSO2IN = 0.0
YSO2OUT = 0.0146
XSIN = 0.0
XSOUT = 0.2010

STAGE	H2S CONC., VOL. FRACT.	ACID LOADING,, LB H2SO4/LB C
0.0	0.220400	0.033551
1	0.214560	0.037627
2	0.208356	0.041958
3	0.201799	0.046535
4	0.194906	0.051346
5	0.187696	0.056379
6	0.180193	0.061616
7	0.172423	0.067039
8	0.164417	0.072628
9	0.156208	0.078357
10	0.147833	0.084203
11	0.139331	0.090138
12	0.130743	0.096132
13	0.122113	0.102156
14	0.113485	0.108178
15	0.104906	0.114167
16	0.096422	0.120089
17	0.088079	0.125912
18	0.079923	0.131605
19	0.071999	0.137136
20	0.064348	0.142476
21	0.057013	0.147596
22	0.050030	0.152470
23	0.043434	0.157075
24	0.037256	0.161387
25	0.031522	0.165389
26	0.026255	0.169066
27	0.021472	0.172404
28	0.017185	0.175397
29	0.013401	0.178038
30	0.010120	0.180328
31	0.007340	0.182269
32	0.005048	0.183868
33	0.003227	0.185139
34	0.001854	0.186097
35	0.000897	0.186766
35.77	0.000417	0.187100

NUMBER OF STAGES = 35.7685
HEIGHT OF CARBON/STAGE = 5.0000
TOTAL HEIGHT OF CARBON = 178.8424
TOTAL VOLUME OF CARBON = 105.3471 CUBIC FEET
SPACE VELOCITY = 481.1982 SCF GAS/CF CARBON/HOUR

Table C-2-5

SULFUR GENERATION MATERIAL BALANCE

POUNDS OF SULFUR IN = 1472.4521
POUNDS OF SULFUR OUT = 1470.7224

SULFUR GENERATOR DESIGN SG 610

CONTROL VARIABLE, Z = 1.
HEIGHT OF CARBON/STAGE BASED ON SETTLED BED DEPTH, INCHES = 10.0000
DIAMETER OF COLUMN, INCHES = 36.00
TOTAL INLET GAS FLOW RATE, CFM AT 70F. = 54619.00
RATE CONSTANT = 3.8000
MINUS ACTIVATION ENERGY/GAS LAW CONSTANT = -2644.00
TEMPERATURE OF REACTOR = 760.00
ORDER OF REACTION WITH RESPECT TO H2S = 0.5800
ORDER OF REACTION WITH RESPECT TO ACID LOADING = 0.6700
CARBON RATE, LBS/HR = 6605.00
NUMBER OF STAGES WHEN KNOWN FOR Z =2 = 11.
FRACTION OF INLET ACID LOST AS SO2= 0.1495
YH2SIN = 0.2204
YH2SOUT = 0.0004
XVIN = 0.2200
XVOUT = 0.0326
YSO2IN = 0.0
YSO2OUT = 0.0146
XSIN = 0.0
XSOUT = 0.2010

STAGE	H2S CONC., VOL. FRACT.	ACID LOADING,, LB H2SO4/LB C
0.0	0.220400	0.033551
1	0.208811	0.041641
2	0.195867	0.050676
3	0.181686	0.060574
4	0.166440	0.071216
5	0.150354	0.082444
6	0.133700	0.094068
7	0.116790	0.105872
8	0.099963	0.117617
9	0.083573	0.129058
10	0.067972	0.139948
11	0.053492	0.150055
12	0.040432	0.159171
13	0.029039	0.167123
14	0.019496	0.173784
15	0.011910	0.179080
16	0.006300	0.182995
17	0.002594	0.185582
18	0.000609	0.186968
18.17	0.000419	0.187100

NUMBER OF STAGES = 18.1729
HEIGHT OF CARBON/STAGE = 10.0000
TOTAL HEIGHT OF CARBON = 181.7290
TOTAL VOLUME OF CARBON = 107.0474 CUBIC FEET
SPACE VELOCITY = 473.5549 SCF GAS/CF CARBON/HOUR

Table C-2-6

SULFUR GENERATION MATERIAL BALANCE

POUNDS OF SULFUR IN = 1472.4521
POUNDS OF SULFUR OUT = 1470.7224

SULFUR GENERATOR DESIGN SG 615

CONTROL VARIABLE, Z = 1.
HEIGHT OF CARBON/STAGE BASED ON SETTLED BED DEPTH, INCHES = 15.0000
DIAMETER OF COLUMN, INCHES = 36.00
TOTAL INLET GAS FLOW RATE, CFH AT 70F. = 54619.00
RATE CONSTANT = 3.8000
MINUS ACTIVATION ENERGY/GAS LAW CONSTANT = -2644.00
TEMPERATURE OF REACTOR = 760.00
ORDER OF REACTION WITH RESPECT TO H2S = 0.5800
ORDER OF REACTION WITH RESPECT TO ACID LOADING = 0.6700
CARBON RATE, LBS/HR = 6605.00
NUMBER OF STAGES WHEN KNOWN FOR Z = 2 = 11.
FRACTION OF INLET ACID LOST AS SO2= 0.1495
YH2SIN = 0.2204
YH2SOUT = 0.0004
XVIN = 0.2200
XVOUT = 0.0326
YSO2IN = 0.0
YSO2OUT = 0.0146
XSIN = 0.0
XSOUT = 0.2010

STAGE	H2S CONC., VOL. FRACT.	ACID LOADING,, LB H2SO4/LB C
0.0	0.220400	0.033551
1	0.203152	0.045591
2	0.183076	0.059604
3	0.160629	0.075272
4	0.136515	0.092104
5	0.111661	0.109452
6	0.087149	0.126562
7	0.064120	0.142637
8	0.043664	0.156915
9	0.026696	0.168759
10	0.013845	0.177729
11	0.005359	0.183652
12	0.001026	0.186677
12.31	0.000419	0.187100

NUMBER OF STAGES = 12.3091
HEIGHT OF CARBON/STAGE = 15.0000
TOTAL HEIGHT OF CARBON = 184.6361
TOTAL VOLUME OF CARBON = 108.7598 CUBIC FEET
SPACE VELOCITY = 466.0989 SCF GAS/CF CARBON/HOUR

Table C-2-7

SULFUR GENERATION MATERIAL BALANCE

POUNDS OF SULFUR IN = 1472.4521
POUNDS OF SULFUR OUT = 1470.7224

SULFUR GENERATOR DESIGN SG 617

CONTROL VARIABLE, Z = 1.
HEIGHT OF CARBON/STAGE BASED ON SETTLED BED DEPTH, INCHES = 17.0000
DIAMETER OF COLUMN, INCHES = 36.00
TOTAL INLET GAS FLOW RATE, CFH AT 70F. = 54619.00
RATE CONSTANT = 3.8000
MINUS ACTIVATION ENERGY/GAS LAW CONSTANT = -2644.00
TEMPERATURE OF REACTOR = 760.00
ORDER OF REACTION WITH RESPECT TO H2S = 0.5800
ORDER OF REACTION WITH RESPECT TO ACID LOADING = 0.6700
CARBON RATE, LBS/HR = 6605.00
NUMBER OF STAGES WHEN KNOWN FOR Z =2 = 11.
FRACTION OF INLET ACID LOST AS SO2= 0.1495
YH2SIN = 0.2204
YH2SOUT = 0.0004
XVIN = 0.2200
XVOUT = 0.0326
YSO2IN = 0.0
YSO2OUT = 0.0146
XSIN = 0.0
XSOUT = 0.2010

STAGE	H2S CONC., VOL. FRACT.	ACID LOADING,, LB H2SO4/LB C
0.0	0.220400	0.033551
1	0.200913	0.047153
2	0.177905	0.063213
3	0.152068	0.081248
4	0.124492	0.100496
5	0.096591	0.119971
6	0.069973	0.138551
7	0.046243	0.155115
8	0.026785	0.168697
9	0.012550	0.178633
10	0.003874	0.184689
10.93	0.000419	0.187100

NUMBER OF STAGES = 10.9300
HEIGHT OF CARBON/STAGE = 17.0000
TOTAL HEIGHT OF CARBON = 185.8092
TOTAL VOLUME OF CARBON = 109.4509 CUBIC FEET
SPACE VELOCITY = 463.1560 SCF GAS/CF CARBON/HOUR

Table C-2-8

SULFUR GENERATION MATERIAL BALANCE

POUNDS OF SULFUR IN = 1472.4521
POUNDS OF SULFUR OUT = 1470.7224

SULFUR GENERATOR DESIGN SG 620

CONTROL VARIABLE, Z = 1.
HEIGHT OF CARBON/STAGE BASED ON SETTLED BED DEPTH, INCHES = 20.0000
DIAMETER OF COLUMN, INCHES = 36.00
TOTAL INLET GAS FLOW RATE, CFH AT 70F. = 54619.00
RATE CONSTANT = 3.8000
MINUS ACTIVATION ENERGY/GAS LAW CONSTANT = -2644.00
TEMPERATURE OF REACTOR = 760.00
ORDER OF REACTION WITH RESPECT TO H2S = 0.5800
ORDER OF REACTION WITH RESPECT TO ACID LOADING = 0.6700
CARBON RATE,LBS/HR = 6605.00
NUMBER OF STAGES WHEN KNOWN FOR Z =2 = 11.
FRACTION OF INLET ACID LOST AS SO2= 0.1495
YH2SIN = 0.2204
YH2SOUT = 0.0004
XVIN = 0.2200
XVOUT = 0.0326
YSO2IN = 0.0
YSO2OUT = 0.0146
XSIN = 0.0
XSOUT = 0.2010

STAGE	H2S CONC., VOL. FRACT.	ACID LOADING,,LB H2SO4/LB C
0.0	0.220400	0.033551
1	0.197583	0.049478
2	0.170114	0.068651
3	0.139191	0.090236
4	0.106715	0.112905
5	0.075104	0.134970
6	0.046934	0.154633
7	0.024485	0.170302
8	0.009260	0.180929
9	0.001571	0.186296
9.38	0.000419	0.187100

NUMBER OF STAGES = 9.3774
HEIGHT OF CARBON/STAGE = 20.0000
TOTAL HEIGHT OF CARBON = 187.5476
TOTAL VOLUME OF CARBON = 110.4749 CUBIC FEET
SPACE VELOCITY = 458.8630 SCF GAS/CF CARBON/HOUR

Table C-2-9

SULFUR GENERATION MATERIAL BALANCE

POUNDS OF SULFUR IN = 1472.4521
POUNDS OF SULFUR OUT = 1470.7224

SULFUR GENERATOR DESIGN SG 625

CONTROL VARIABLE, Z = 1.
HEIGHT OF CARBON/STAGE BASED ON SETTLED BED DEPTH, INCHES = 25.0000
DIAMETER OF COLUMN, INCHES = 36.00
TOTAL INLET GAS FLOW RATE, CFH AT 70F. = 54619.00
RATE CONSTANT = 3.8000
MINUS ACTIVATION ENERGY/GAS LAW CONSTANT = -2644.00
TEMPERATURE OF REACTOR = 760.00
ORDER OF REACTION WITH RESPECT TO H2S = 0.5800
ORDER OF REACTION WITH RESPECT TO ACID LOADING = 0.6700
CARBON RATE, LBS/HR = 6605.00
NUMBER OF STAGES WHEN KNOWN FOR Z =2 = 11.
FRACTION OF INLET ACID LOST AS SO2= 0.1495
YH2SIN = 0.2204
YH2SOUT = 0.0004
XVIN = 0.2200
XVOUT = 0.0326
YSO2IN = 0.0
YSO2OUT = 0.0146
XSIN = 0.0
XSOUT = 0.2010

STAGE	H2S CONC., VOL. FRACT.	ACID LOADING,, LB H2SO4/LB C
0.0	0.220400	0.033551
1	0.192103	0.053303
2	0.157099	0.077736
3	0.117919	0.105084
4	0.078585	0.132540
5	0.043880	0.156765
6	0.018118	0.174747
7	0.003751	0.184775
7.62	0.000420	0.187100

NUMBER OF STAGES = 7.6181
HEIGHT OF CARBON/STAGE = 25.0000
TOTAL HEIGHT OF CARBON = 190.4514
TOTAL VOLUME OF CARBON = 112.1853 CUBIC FEET
SPACE VELOCITY = 451.8669 SCF GAS/CF CARBON/HOUR

H_2S Generator/Sulfur Stripper

The H_2S generator/S stripper is a multi-functional reactor, which removes the sulfur from the carbon and converts part of the sulfur to H_2S used in the sulfur generator to convert sulfuric acid to sulfur. The reactor can be separated into three phases: 1) a carbon preheater, 2) a sulfur stripper, and 3) a H_2S generator, although the function of each phase overlaps. In this reactor any additional sulfuric acid is converted to sulfur.

Diameter

The hydrogen requirement was determined in the integral pilot runs to be about 3.4 moles H_2/mole SO_2 sorbed. In addition the total inlet gas flow rate is determined by the inlet H_2 concentration. With the gasifier and water gas shift reactor used presently an inlet H_2 concentration of about 19.4% volume %, therefore the total gas flow rate is given by Equation [18],

$$[18] \quad (q_T)_{H_2S\ GEN.} = \text{INLET GAS FLOW RATE} = \left(\frac{3.4\ \text{MOLES}\ H_2}{\text{MOLE ACID}}\right)\left(\frac{15\ \text{MOLE ACID}}{\text{HR.}}\right)\left(\frac{359\ \text{SCF}\ H_2/\text{MOLE}\ H_2}{0.194\ \text{SCF}\ H_2/\text{MOLE GAS}}\right)$$

to yield 94,000 SCFH (1,565 SCFM). Then, as for the SO_2 sorber, Equation [19],

$$[19] \quad D = \sqrt{\left(\frac{q_T}{v}\right)\left(\frac{4}{\pi}\right)\left(\frac{1}{60}\right)\left(\frac{T+460}{492}\right)}$$

for a linear gas velocity of 3 ft./sec., and an average temperature of 1000°F, the diameter of the H_2S generator/sulfur stripper is:

$$\boxed{D = 5.8\ \text{ft.}}$$

The velocity was taken as 3 ft./sec. to allow variability in operation and 1000°F is the expected temperature. In the top stage (carbon preheater section)

the temperature expected is somewhat lower, about 700°F, therefore the diameter of that section was set at 5.2 ft. to maintain a gas velocity of 3 ft./sec.

Space Velocity

Kinetic studies have been conducted on sulfur stripping from carbon and for H_2S formation. The data are not yet complete enough to allow a rigorous equipment design as for the SO_2 sorber and sulfur generator. For this reason equipment is sized by the space velocity concept. As given by Levenspeil[23], if a reactor is run under expected operating conditions, then design of a similar vessel can be made based on equivalent space velocities. This assumes no changes in system flow or thermal characteristics.

For the integral pilot runs sufficient sulfur removal from the carbon as well as H_2S formation were obtained in an 8 stage, 4 inch diameter fluidized bed reactor. The bed, which operated at an average temperature of 1200°F, had two stages for H_2S formation and 6 stages for carbon preheat and sulfur removal. The space velocity at which the H_2S formation section was operated was about 5700 sft.^{3} gas/ft.^{3} C/hr. The carbon preheat and sulfur stripping section was operated at a space velocity of about 1900 hr.$^{-1}$.

In addition to the integral runs a process variable study was done of the effect of temperature on sulfur removal, on space velocity and inlet H_2 concentration on sulfur removal, and on temperature on H_2S formation. This data is shown in Figures C-2-3 - C-2-6. The data indicates that lowering the temperature to 1000°F (Figure C-2-3) decreases the sulfur removal by about 10%, but Figure C-2-5 indicates that at 1200°F most of the sulfur is removed in about 5 stages (space

velocity - 1900 hr.$^{-1}$) as in the integral pilot run. Therefore for the H_2S generator for sulfur stripping and carbon preheat sections, the space velocity was decreased by about 15% to 1600 hr.$^{-1}$ to allow for the decrease in temperature. This increases the carbon residence time from about 8 minutes to 21 minutes, so there is an increase of over 2.5 times. The reason the space velocity doesn't change by this much is the inlet H_2 concentration is lower in the prototype, 19.5% versus about 30% in the runs shown in Fig. C-2-3 - -6. As shown in Fig. C-2-4 the decrease in concentration from 30 to 20% has little effect on the sulfur removal, but rather the effect on space velocity is on the increase in gas flow rate to maintain the same molar flow rate of H_2 needed for reaction.

The effect of temperature on H_2S formation is shown in Fig. C-2-6. Decreasing the temperature from 1200 to 1000°F decreases the conversion from about 72 to about 56%. This decrease implies a decreased space velocity from about 5700 hr.$^{-1}$ to about 4400 hr.$^{-1}$, however, in the prototype a space velocity of 3800 hr.$^{-1}$ was used to assure additional conversion capability if needed.

Figure C-2-3. Effect of temperature on sulfur stripping with H_2 present

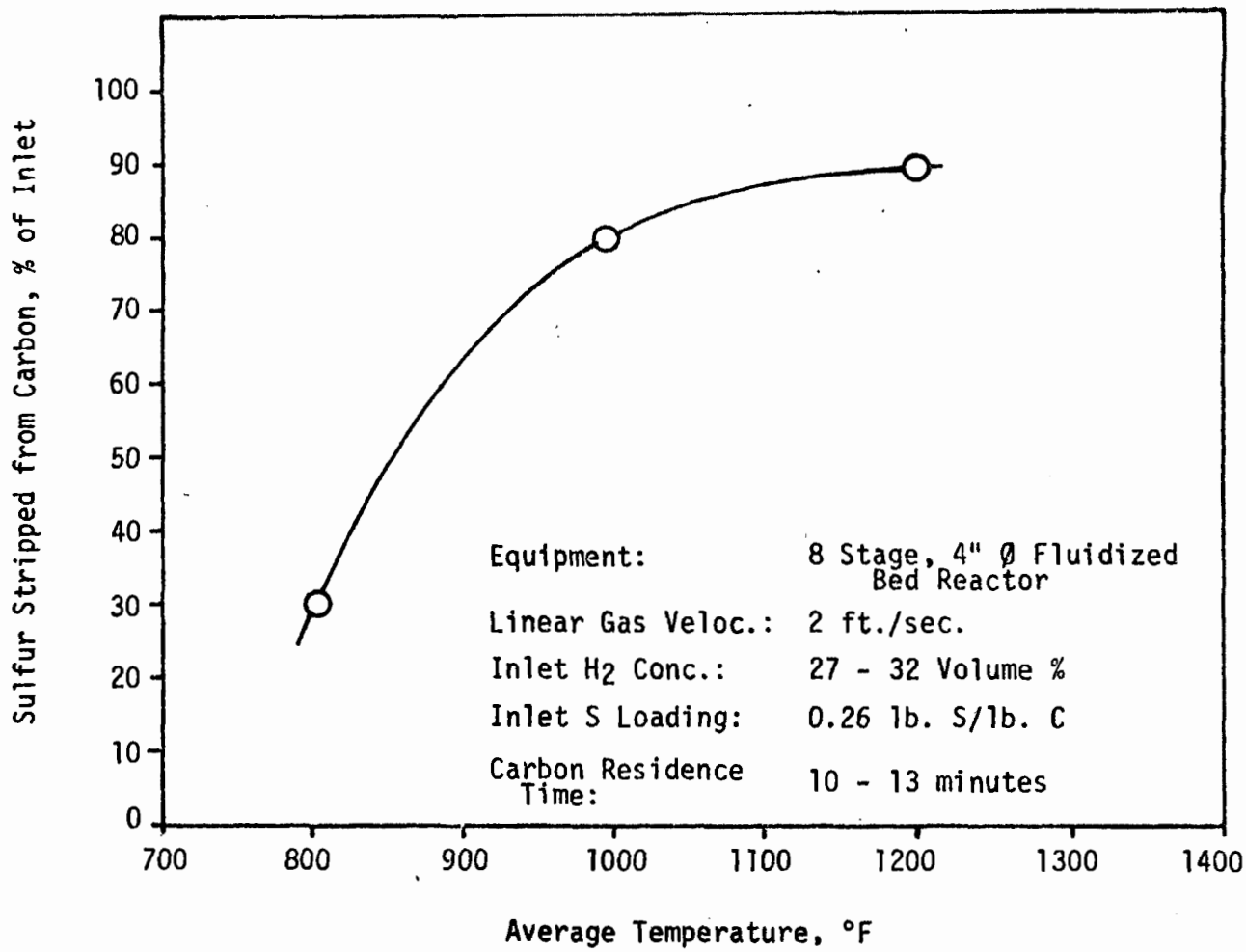

Figure C-2-4. Effect of H_2 concentration and gas/solid contact time on sulfur stripping at 1200°F

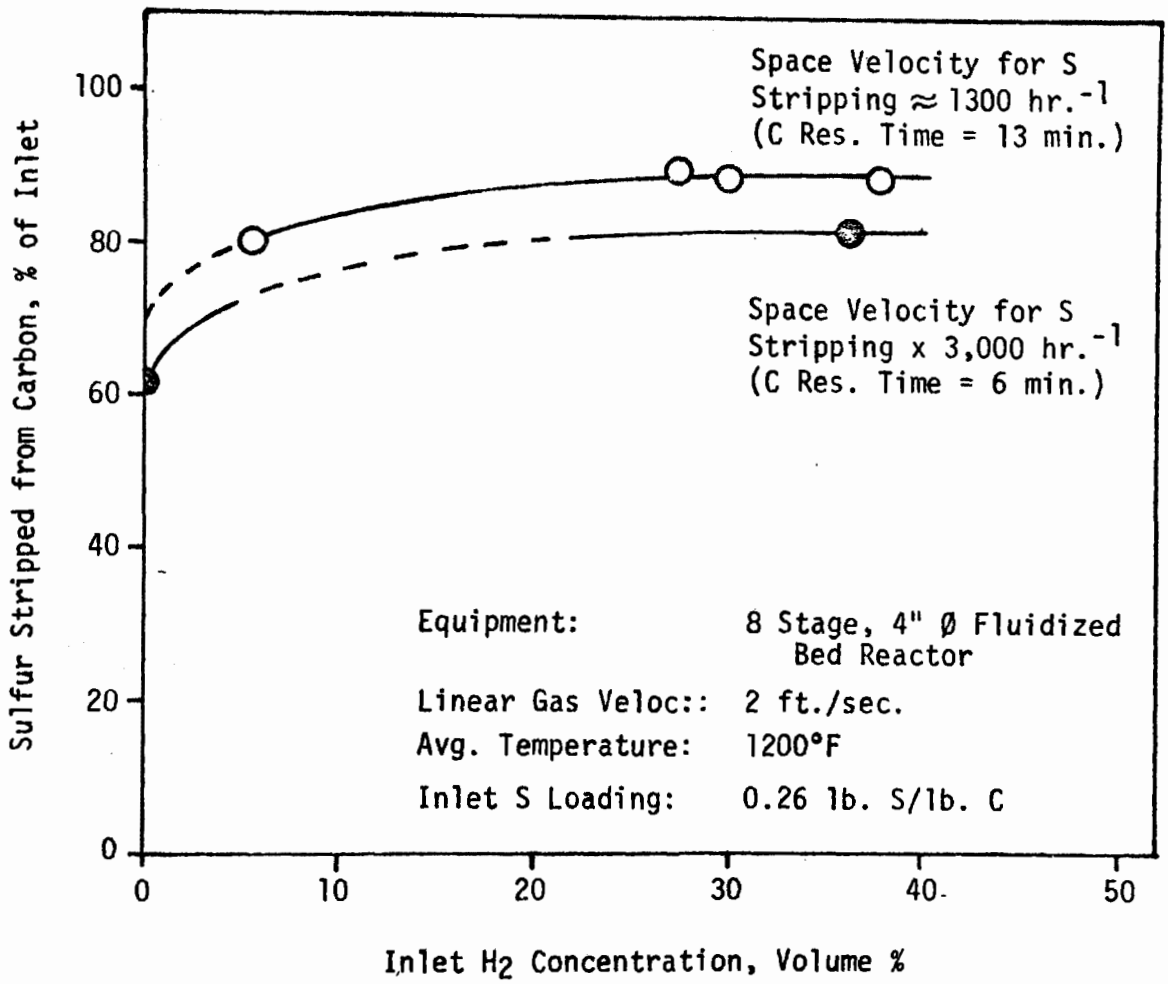

Figure C-2-5. Sulfur removal from activated carbon in an 8 stage, 4"Ø regenerator

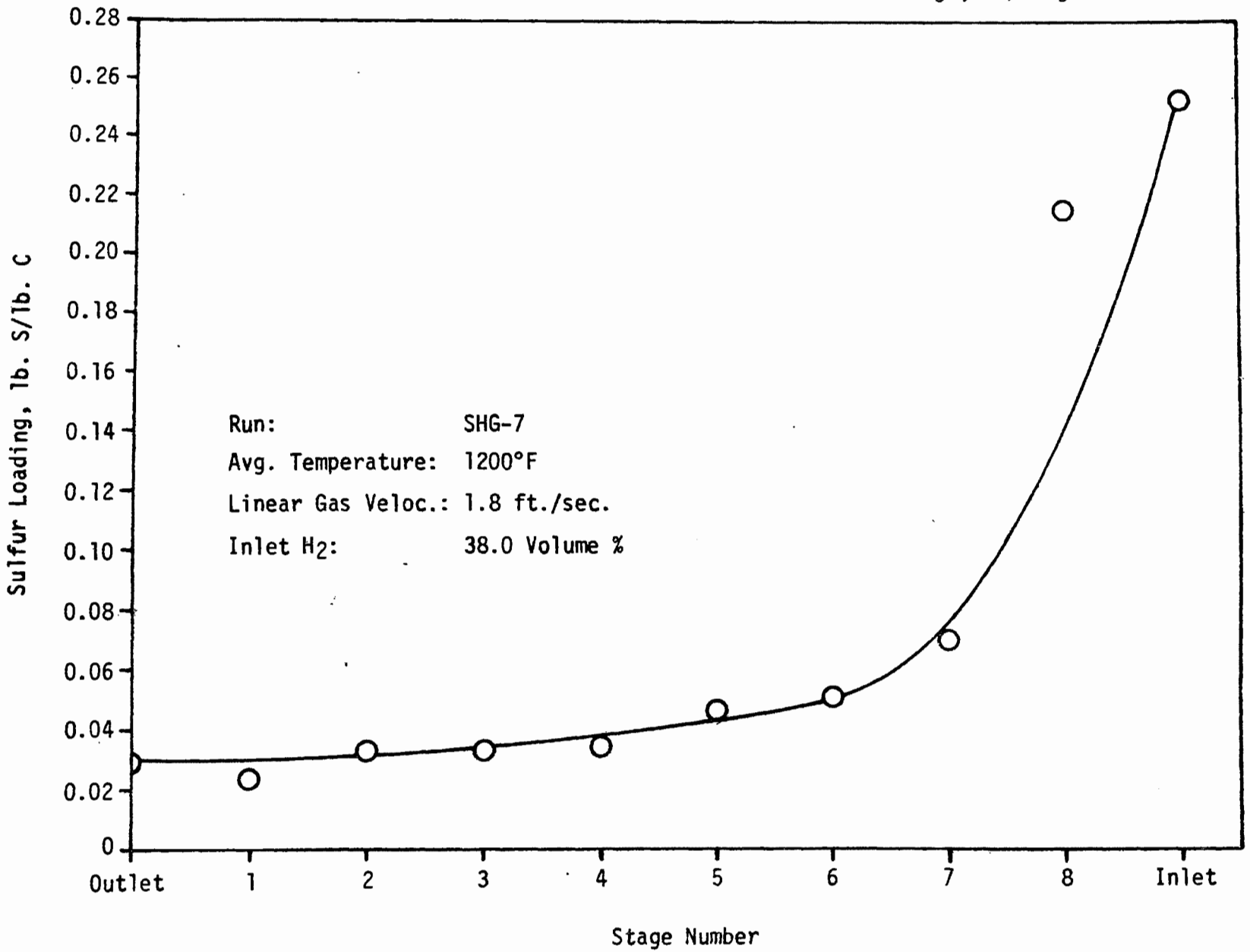

Figure C-2-6. Effect of temperature on the conversion of sulfur to hydrogen sulfide

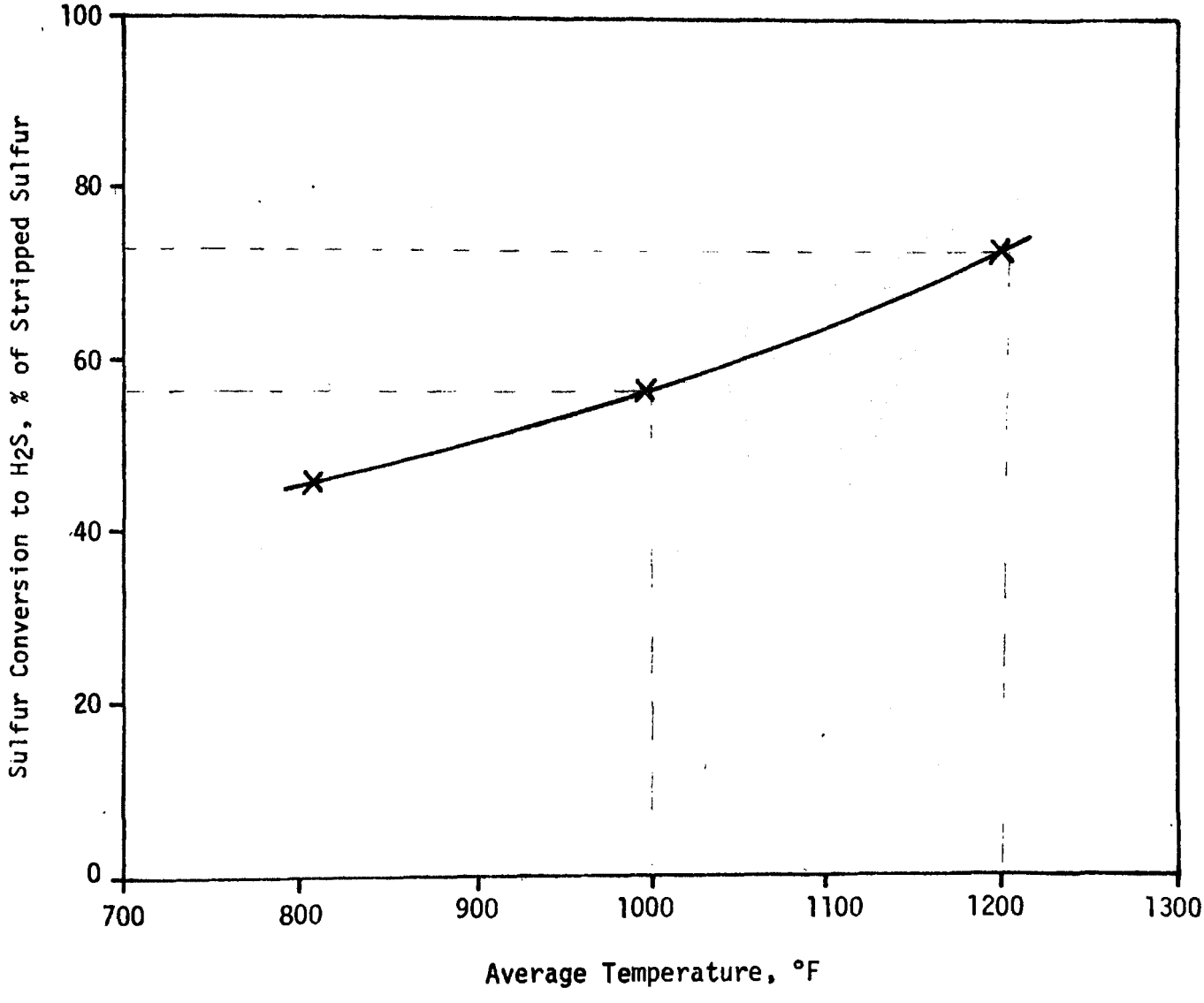

MANPOWER REQUIREMENTS

The R&D, plant and maintenance manpower requirements were estimated from the program schedule use past experience in pilot plant operation as a guide.

Engineering design costs were estimated separately as 10% of the equipment costs based on Peters & Timmerhaus[11].

MANPOWER DISTRIBUTION

	R&D PERSONNEL				PLANT PERSONNEL				TOTAL
	Supr.	Engr.	Anal.	Tech.	Supr.	Opr.	Supr.	Maint.	
A. PILOT PLANT PROGRAM									
1. Process Control (Existing Pilot Unit)	83	1,044	522	3,132					4,781
2. Full Scale Fluid Bed Tests	83	1,044		1,044					2,171
B. PROTOTYPE PROGRAM									
1. Prepare Detailed Test Program	55	696	696						1,447
2. Prepare Process Design Specs.	55	696	696						1,447
3. Detailed Engng. Design & Bids	138	1,740							1,878
4. Procurement & Construction	388	4,872							5,260
5. Definition of Boiler Opr. Characteristics	83	1,044	522						1,649
6. Operation									
a. Operator Training	55	696		1,392					2,143
b. Start-up	166	2,088	522	2,088	522	2,088	300	2,088	7,774
c. Test Program	125	1,566	522	2,088	522	2,088	300	2,088	9,290
d. Demonstration Run	83	1,044		1,044	1,044	8,352	600	4,176	12,167
7. Data Evaluation & Process Assessment	249	3,132	1,044						4,423
TOTALS BY JOB	1,563	19,662	4,524	10,788	2,088	12,528	1,200	8,352	54,440

LABOR COST

(See Manpower Distribution)

Supervisor	1,563 @ $12/hr.	=	$ 18,756
Engineer & Sci.	19,662 @ $10/hr.	=	196,620
Analyst	4,524 @ $7.50/hr.	=	53,940
Technician	10,788 @ $5.00/hr.	=	33,930
Plant Operator	12,528 @ $5.00/hr.	=	62,640
Plant Supervisor	2,088 @ $7.50/hr.	=	15,660
Maintenance	8,352 @ $6.50/hr.	=	54,288
Maintenance Supervisor	1,200 @ $7.50/hr.	=	9,000
TOTAL			$444,834
Overhead			422,600
TOTAL D.L. & Overhead			$867,426
Maintenance Material (100% of Maintenance Labor)			54,288
Consultants (1/Month @ $400/Day)			14,400
Travel (2 Trips/Month @ $200/Trip)			14,400

PROTOTYPE PROGRAM

DIRECT RAW MATERIAL & UTILITIES COST

Coal (.358 T/hr.)($20/T)	=	$ 7.16
Activated Carbon (25 lbs./hr.)($.40/lb.)	=	10.00
Power (900 Hp)(.746 KW/hr.)($.0075/KWH)	=	5.03
No. 2 Fuel Oil (63 GPH)($.20/Gal.)	=	12.60
Water, BFW (12,000 lbs./hr.)($0.18/1,000 lbs.)	=	.22
C.W. (250,000 lbs./hr.)($.012/1,000 lbs.)	=	3.0
TOTAL UTILITIES & RAW MATERIAL		$38.00/Hour

START-UP:	(3 Mo.)(1/2 Time)(720 Hr./Mo.)($38/hr.)	=	$ 41,040
TEST PROGRAM:	(3 Mo.)(3/4 Time)720 Hr./Mo.)($38/hr.)	=	61,560
DEMONSTRATION RUN:	(6 Mo.)(Full Time)(720 Hrs./Mo.)($38/hr.)	=	164,160
	TOTAL PROGRAM UTIL. & R.M.		$266,760

MAIN PLANT ITEMS FOR ESTIMATE

(MPI)

Designation	Unit Cost	No. Req'd.	Total Cost
Adsorber	$65,700	1	$ 65,700
Regenerator (S Generator)	18,100	1	18,100
Regenerator (H_2S Gen./S Stripper)	24,600	1	24,600
Carbon Cooler	3,700	1	3,700
Blowers and Motors	15,330	1	15,330
	6,600	2	13,200
Electric Motors	8,610	1	8,610
	500	2	1,000
Heat Exchangers	14,500	1	14,500
	7,600	1	7,600
	1,800	1	1,800
	500	1	500
Fired Heaters	3,300	1	3,300
	24,300	1	24,300
	28,200	1	28,200
	26,970	1	26,970
Carbon Storage	5,040	2	10,080
Cyclone Collectors	15,850	1	15,850
	1,470 Avg.	3	4,405
Dust Collector	22,000	1	22,000
Bucket Elevators	4,366 Avg.	5	21,830
Belt Conveyors	2,753 Avg.		16,520
Shift Reactor	7,800	1	7,800
Gas Producer	87,000	1	87,000
		32	$442,895

MPI - Average Cost in 1974 = $13,840

MPI - Average Cost in 1958 = $ 3,820

BATTERY LIMIT ESTIMATE

TITLE: Westvaco SO_2 Removal Process - 15 MW PROTOTYPE UNIT			DATE: August 6, 1974	
Number of MPI's	Cost Indexes 1958	Cost Indexes 1974	Factor	Estimated Cost
32	100	362		
Average Cost of MPI's in 1958 = $3,820 MPI (Main Plant Items) - See Separate List MUE (Miscellaneous Unlisted Equipment)			Est'd. 15%	$ 442,900
Basic Equipment (MPI + MUE)				509,300
Field Erection of Basic Equipment	High - Large Pct. of Equip. Involving Field Labor, Large Equipment		19	
Equipment Foundations & Structural Supports	High Predominance of Mild Steel Equip., Large Fans, Large Equip.		6	
Piping	High - Gas Handling Significant Amt. of Large Ductwork		82	
Insulation - Equipment	High - Significant Lagging Regen. & Shift Reaction at High Temperature		7.8	
- Piping	High - Significant Piping, High Temperature		14.5	
Electrical	Mild Steel Equip., Heavy Drives, Solids		18.5	
Instrumentation	High Instrumentation Required, Solids Handling		44.5	
Miscellaneous	Large Process, Top of Range		5	
Buildings Architectural Structural	Open Air Plant with Minor Buildings - Use of Middle of Range		22.5	
Building Services (% of Arch'l & Struct.)	Low Amount of Building Services - Open Air			
Compressed Air	5			
Electrical Lighting	9			
Sprinklers	-	17%	3.8	
Plumbing	1			
Heating	2			
Vent & Air Cond.	0			
Total Services	17			
Sub-Total Factored Items			224	
Total Factored Items Adjusted			224	1,140,800
Direct Cost of Adsorber-Regenerator Battery Limit (Excl. Taxes and Cat.)				1,650,000
Addn'l Battery Limit Items Carbon Feeder, Sulfur Flaker & Inert Gas Generator				22,400
TOTAL DIRECT COST - BATTERY LIMIT				$1,672,400

SUMMARY SHEET FOR EQUIPMENT COST ESTIMATION

TITLE: Westvaco SO_2 Removal Process		DATE: August 6, 1974
15 MW PROTOTYPE UNIT	Factor	Estimated Cost
DIRECT COST OF BATTERY LIMIT		$1,672,400
STORAGE AND HANDLING	---	---
UTILITIES Battery Limit Add'n, Steam and Elec. Available from Existing Power Station - Use Low B/L	3	50,200
SERVICES Battery Limit Add'n, Minimal Services Req'd.	3	53,400
TOTAL BATTERY LIMIT PLUS AUXILIARIES		$1,776,000
CATALYST Activated Carbon: 120% [Adsorber + Regenerator] (1.20)(5.7 hrs.)(3.3 TPH)(800/T)		18,000
Shift: (200 ft.^{3})($26/ft.^{3})		5,200
TOTAL DIRECT COST		$1,799,200
INDIRECT COSTS		
Construction Expense (Factor of Direct Costs)	10	
Contractor's Fee (Factor of Direct Costs)	4	
Contingency (Factor of Direct Costs)	20	611,700
TOTAL DIRECT AND INDIRECT INSTALLED COST		$2,410,900

TECHNICAL REPORT DATA
(Please read Instructions on the reverse before completing)

1. REPORT NO. EPA-600/2-76-135b	2.	3. RECIPIENT'S ACCESSION NO.
4. TITLE AND SUBTITLE Development of the Westvaco Activated Carbon Process for SOx Recovery as Elemental Sulfur, Volume II--Appendix		5. REPORT DATE May 1976
		6. PERFORMING ORGANIZATION CODE
7. AUTHOR(S) G.N. Brown, C.M. Reed, A.J. Repik, R.L. Stallings, and S.L. Torrence		8. PERFORMING ORGANIZATION REPORT NO.
9. PERFORMING ORGANIZATION NAME AND ADDRESS Westvaco Charleston Research Center Box 5207, North Charleston, SC 29406		10. PROGRAM ELEMENT NO. 1AB013; ROAP 21ACX-085
		11. CONTRACT/GRANT NO. 68-02-0003
12. SPONSORING AGENCY NAME AND ADDRESS EPA, Office of Research and Development Industrial Environmental Research Laboratory Research Triangle Park, NC 27711		13. TYPE OF REPORT AND PERIOD COVERED Final; 1/71-6/74
		14. SPONSORING AGENCY CODE EPA-ORD

15. SUPPLEMENTARY NOTES Project officer for this report is D.A. Kemnitz, Mail Drop 62, Ext 2557.

16. ABSTRACT The report gives results of a demonstration (in a 20,000-cfh integral pilot plant) of an all-dry, fluidized-bed process, using activated carbon for recovering SO2 as elemental sulfur. Granular carbon was recycled continuously more than 20 times between contact with flue gas from an oil-fired boiler and carbon regeneration to recover sulfur. During the 315-hour run, carbon performance remained high with essentially no chemical and low mechanical losses. Over 90% of the 2000 ppm SOx was removed from the flue gas as sulfuric acid by catalytic oxidation and subsequent hydrolysis within the carbon granule. In the two-step regeneration: (1) the acid was converted to elemental sulfur at 300F with internally produced H2S, and (2) an external source of hydrogen at 1000F was used to thermally strip the by-product sulfur from the carbon and produce the required H2S by reaction with the remaining sulfur on carbon. Sufficient process and design information was developed from data obtained in the integral run and prior stepwise pilot equipment operation to permit scale-up to a 15-MW prototype for a coal-fired boiler. In the preliminary design, reducing gas is produced in a coal gasifier. An economic assessment of a 1000-MW conceptual design for the process indicates capital and operating costs competitive with those of other regenerable systems.

17. KEY WORDS AND DOCUMENT ANALYSIS

a. DESCRIPTORS		b. IDENTIFIERS/OPEN ENDED TERMS	c. COSATI Field/Group
Air Pollution	Regeneration (Engineering)	Air Pollution Control	13B
Flue Gases		Stationary Sources	21B
Activated Carbon	Fuel Oil	Elemental Sulfur	11G 21D
Sulfur Oxides	Sulfuric Acid	Westvaco Process	07B
Fluidized Bed Processing	Catalysis	Catalytic Oxidation	07D
	Oxidation		13H, 07A 07C

18. DISTRIBUTION STATEMENT Unlimited	19. SECURITY CLASS (This Report) Unclassified	21. NO. OF PAGES 889*
	20. SECURITY CLASS (This page) Unclassified	22. PRICE

EPA Form 2220-1 (9-73)