EPA-600/2-76-283
December 1976

Environmental Protection Technology Series

MEASUREMENT TECHNIQUES FOR INORGANIC TRACE MATERIALS IN CONTROL SYSTEM STREAMS

Industrial Environmental Research Laboratory
Office of Research and Development
U.S. Environmental Protection Agency
Research Triangle Park, North Carolina 27711

RESEARCH REPORTING SERIES

Research reports of the Office of Research and Development, U.S. Environmental Protection Agency, have been grouped into five series. These five broad categories were established to facilitate further development and application of environmental technology. Elimination of traditional grouping was consciously planned to foster technology transfer and a maximum interface in related fields. The five series are:

1. Environmental Health Effects Research
2. Environmental Protection Technology
3. Ecological Research
4. Environmental Monitoring
5. Socioeconomic Environmental Studies

This report has been assigned to the ENVIRONMENTAL PROTECTION TECHNOLOGY series. This series describes research performed to develop and demonstrate instrumentation, equipment, and methodology to repair or prevent environmental degradation from point and non-point sources of pollution. This work provides the new or improved technology required for the control and treatment of pollution sources to meet environmental quality standards.

EPA REVIEW NOTICE

This report has been reviewed by the U.S. Environmental Protection Agency, and approved for publication. Approval does not signify that the contents necessarily reflect the views and policy of the Agency, nor does mention of trade names or commercial products constitute endorsement or recommendation for use.

This document is available to the public through the National Technical Information Service, Springfield, Virginia 22161.

EPA-600/2-76-283
December 1976

MEASUREMENT TECHNIQUES FOR INORGANIC TRACE MATERIALS IN CONTROL SYSTEM STREAMS

by

J.A. Starkovich, R.F. Maddalone, M.L. Kraft,
C.A. Zee, C. Lin, and C.A. Flegal

TRW Systems Group
One Space Park
Redondo Beach, California 90278

Contract No. 68-02-1393
ROAP No. 21AFC-004
Program Element No. 1AB013

EPA Project Officer: Robert M. Statnick

Industrial Environmental Research Laboratory
Office of Energy, Minerals, and Industry
Research Triangle Park, NC 27711

Prepared for

U.S. ENVIRONMENTAL PROTECTION AGENCY
Office of Research and Development
Washington, DC 20460

CONTENTS

	Page
INTRODUCTION	1
CHAPTER I — GENERAL INFORMATION	2
1.1 Sampling Test Planning	2
1.2 Flue Gas Sampling	2
1.3 Liquid and Slurry Sampling	3
1.4 Solid Sampling	3
1.5 Analytical Test Planning	3
1.6 Laboratory and Sample Preparation	3
1.7 Analytical Procedures	4
CHAPTER II — SAMPLING TEST PLANNING	5
2.1 Gathering Background Information	5
2.2 Pre-Test Site Survey	8
2.2.1 Survey Team Logistics	8
2.2.2 Test Site Inspection	8
2.2.3 Sampling Point Selection	9
2.2.4 Flow Measurements and Grain Loadings	11
2.3 Test Scheduling and Logistics	11
2.3.1 Test Matrix Development	12
2.3.2 Pre-Test Personnel Briefing	12
2.3.3 Sampling Team Organization and Equipment	13
2.3.4 Equipment Assembly and Checkout	17
CHAPTER III — FLUE GAS SAMPLING	20
3.1 Special Considerations	20
3.1.1 Contamination and Alteration of Sample by Sampling Train	20
3.1.2 Multiphase Sampling Requirements	22
3.1.3 High Volume Sampling Requirement	22
3.1.4 Aerotherm High Volume Stack Sampler	23
3.1.5 HVSS Components — Selection and Design Recommendations	29
3.2 Special Field Guidelines for Trace Element Source Sampling	36
3.2.1 Work Area and Contamination Considerations	36
3.2.2 Filter and Impinger Solution Preparation	37
3.2.3 Probe Liner Preparation, Installation and Removal	38
3.2.4 Handling and Storage of Impinger Samples	39

CONTENTS (Continued)

Page

CHAPTER IV — LIQUID AND SLURRY SAMPLING 44

4.1 Considerations for Liquid and Slurry Samples 45

4.2 Equipment Survey and Recommendations 47

4.3 Sample Collection Separation and Storage 48

4.3.1 Clear Water 50
4.3.2 Water-Solid Streams 51
4.3.3 Water-Organic Streams 51
4.3.4 Water-Organic Liquid-Solid Streams 51
4.3.5 Summary 52

CHAPTER V — SOLID SAMPLING 53

5.1 Sampling Methodology and Equipment Survey 53

5.2 Statistical Determination of Sample Size 57

5.3 Sample Collection and Storage 58

5.4 Other Considerations 59

CHAPTER VI — ANALYTICAL TEST PLANNING 61

6.1 Laboratory Preparations 61

6.2 Data Review Points 63

6.3 Precision and Accuracy 64

6.4 Calibration 65

6.4.1 Factor Method 65
6.4.2 Short Curve Method 66
6.4.3 Additions Method (Recommended) 66

CHAPTER VII — LABORATORY AND SAMPLE PREPARATION 67

7.1 Labware Preparation 67

7.2 Particulate and Impinger Solution Sample Preparation . . . 68

7.2.1 Probe Liner Sample 69
7.2.2 Cyclone Sample 69
7.2.3 Filter Sample 69
7.2.4 Impinger Solution 70

7.3 Preparation of Solid Samples 70

7.3.1 Grinding 71
7.3.2 Drying 72
7.3.3 Ashing 72

7.4 Dissolution 72

CONTENTS (Continued)

	Page
CHAPTER VIII — ANALYTICAL PROCEDURES	74
8.1 Atomic Absorption Spectroscopy (AAS)	74
8.1.1 Types of Interferences	78
8.2 Ancillary Group	82
8.2.1 Arsenic Analysis	82
8.2.2 Boron Analysis	84
8.2.3 Fluoride Analysis	85
8.2.4 Mercury Analysis	87
8.2.5 Sulfate by the Gravimetric Method	91
8.2.6 Sulfate by the Turbidimetric Method	94
8.2.7 Cyanide Analysis	96
8.2.8 Chloride Analysis	106
8.2.9 Chloride-Silver Nitrate Potentiometric Method	110
8.2.10 Chloride-Colorimetric Method	114
8.2.11 Nitrate-Brucine Method	117
8.2.12 Nitrate-Phenoldisulfonic Acid Method	120
8.2.13 Antimony Analysis	124
8.2.14 Selenium Analysis	125
8.2.15 Phosphate Analysis	129
REFERENCES	133

FIGURES

Number		Page
1	Survey report sample	6
2	Sampling team task assignments	13
3	Aerotherm high volume stack sampler schematic	26
4	Schematic diagram of Kapton liner inside probe tube	27
5	Model CVE sampler schematic	48
6	Typical separation schemes for process liquids	50
7	Pneumatic line sampler schematic	60
8	Planning logic flow chart	63
9	Cyanide distillation apparatus	98
10	Example of differential titration curve (end point is 25.5 ml)	113
11	Schematic arrangement of equipment for determination of arsenic and selenium	127

TABLES

Number		Page
1	Equipment Inventory for Typical Two-Point, 20 Test Gas Sampling Task	14
2	Chemicals and Laboratory Equipment for Typical Two-Point Gas Sampling Task Involving 20 Tests	18
3	Principal Functional Advantages and Disadvantages of Aerotherm HVSS Unit for Trace Element Sampling and General Source Particulate Testing	24
4	Probe Materials and Selection Criteria	30
5	Filter Material for Trace Element Sampling	33
6	Impingers for Trace Element Sampling	36
7	Sample of Analytical Test Checklist	62
8	Compilation of Accepted Standard Procedures by Element	75
9	Compilation of References for Recommended Procedures . . .	76
10	Atomic Absorption Operating Parameters	77
11	Concentration Ranges for Color Measurement	115

INTRODUCTION

This manual has been prepared for the Industrial Environmental Research Laboratory of EPA in partial fulfillment of contract number 68-02-1393. The manual is written for professionals who are involved with the tasks of collecting and measuring trace inorganic materials in process streams. The procedures have been chosen to provide good, overall accuracy needed for engineering evaluations of control process performance. Lower accuracy procedures suitable for environmental assessment purposes are not addressed.

The first objective in the preparation of the manual was to present an overview of approaches and procedures which have been used with success in the past. It is intended that these procedures be of general nature to the greatest extent possible. However, the procedures are based on experience gained in evaluating control systems for coal fired utilities. Problem areas which were identified during the course of the contract are elaborated in some detail. Several of these problems are considered critical areas in which professional judgment is still required in conducting a test. It is beyond the scope of this manual to present all procedures for use in every situation. Additional volumes of this manual will follow, broadening both the procedures base and the applications descriptions.

CHAPTER I

GENERAL INFORMATION

The purpose of this manual is to present procedures and methods for sampling and analysis of gas, liquid, slurry, and solid process streams for trace inorganic materials. The materials addressed in this manual include the following elemental forms and anions: As, Ba, B, Be, Ca, Cd, Cl^-, CN^-, Cr, Cu, F, Hg, Mn, Ni, NO_3^-, Pb, PO_4^{-3}, Sb, Se, SO_4^{-2}, Sr, V, and Zn.

In sampling for these materials, the major area of concern both in the field and in the analytical laboratory is that of contamination and cleanliness. Every step of the sampling task is subject to contamination. Metal particles can be introduced through abrasion of sampling trains; sample containers can adsorb certain elements; volatile metals can be lost at several different stages; unclean glassware or apparatus can introduce contaminants, and so on. Throughout this manual special attention is given to these and other problems and requirements which pertain to the sampling of trace inorganic materials.

The following sections briefly summarize the chapter contents and note unique approaches to specific sampling and analytical problems.

1.1 SAMPLING TEST PLANNING

Source tests for trace elements must be planned in minute detail. The constraints on pre-cleaning and packaging equipment, reagents, and sample bottles are such that scrounging and borrowing at the test site cannot be tolerated. In addition, the entire test crew must be briefed on the test objectives, potential contamination problems, and proper procedures to ensure that the test plan is carried out correctly.

1.2 FLUE GAS SAMPLING

Sampling gases is no doubt the most problematic and complex task. Material compatibilities, contamination from abrasion, trace metal volatiles, and inorganic background of reagents and filters are problems that must be addressed in order to collect an accurate sample. The procedure presented in this manual uses an Aerotherm high volume sampler, which is

modified by lining the probe with a polymer film, using ultraclean filter materials, and by selecting special sequential oxidative scrubbing solutions for the impingers.

1.3 LIQUID AND SLURRY SAMPLING

Current technology is entirely adequate for this area of sampling. Wastewaters have been analyzed for trace metals for years. The trains that have been developed for this purpose take accurate samples and have been designed to eliminate sources of contamination from within the train. This chapter reviews the state-of-the-art methodology and selects and presents the equipment and procedures applicable to trace elements.

1.4 SOLID SAMPLING

The variety of materials and sample sites that can be encountered in sampling for solid materials is so diverse that it is impossible to consider a single sampling procedure or train. Consequently, this chapter addresses the advantages and disadvantages of various methods and equipment as they pertain to trace element characterization.

1.5 ANALYTICAL TEST PLANNING

The accuracy of the final test data depends as much on the analytical lab work as it does on correct field procedures.

Planning the organization and scheduling of laboratory work must be based on test objectives and the relationship of the samples to each other. Analytical data must be reviewed at several points during the laboratory analysis to check accuracy and precision and to select the correct procedure for the next step.

1.6 LABORATORY AND SAMPLE PREPARATION

Maintaining the cleanliness requirements throughout the sampling and analysis scheme requires that the laboratory work area and all instruments and glassware used be carefully prepared before beginning analytical work. Procedures are presented for this preparation and for the preliminary sample treatment and dissolution.

1.7. ANALYTICAL PROCEDURES

In selecting analytical methods, special attention was given to those capable of detecting 0.1 μg/ml, 1 μg/g, and/or 60 $\mu g/M^3$ concentrations with an accuracy and precision of ±10 percent. With few exceptions, all the metals of interest can be analyzed by atomic absorption spectroscopy once the samples are in solution. Those elements and radicals such as As, SO_4^{-2}, F, B, Sb, NO_3^-, PO_4^{-3}, CN^-, and Cl^- that cannot be handled by AAS can be analyzed by appropriately sensitive colorimetric methods.[1] Atomic Absorption Spectrometer is preferred for the bulk of the analyses since this analytical procedure is common to most laboratories. However, due to the complicated matrix effects that have been found in these sample solutions, an AAS capable of background correction is absolutely necessary. Therefore, only analytical laboratories which have this capability can be employed.

[1] The elements As, Se, B, and Sb can be analyzed by AAS when special techniques are used to introduce the sample into the instrument. However, very poor sensitivity is normally achieved for these elements when the direct aspiration procedure for sample introduction is used.

CHAPTER II

SAMPLING TEST PLANNING

Before a sampling test is performed, detailed planning must be performed to identify test requirements and anticipated problems. The source test planning function can be divided into several overlapping steps; the following sections discuss each step in sequential order. The scope of each step depends on the magnitude, complexity, and familiarity of the test program.

2.1 GATHERING BACKGROUND INFORMATION

Before traveling to a plant for the pre-test site survey, the survey team members must become familiar with the chemical process they will sample. This involves understanding the chemistry of the plant (chemical manufacturers, smelters, etc.), the type of fuel burned (gas, oil, coal, high or low ash, high or low sulfur), and the pollution control process chemistry employed (electrostatic precipitators, wet scrubbers or baghouse filters). An understanding of all phases of the operation leads to initial choices of possible sampling areas.

The location of all applicable process streams (gas, liquid, slurry) should be determined. A schematic of the plant process that identifies these streams should be obtained. Sampling areas can be defined from the schematic and later can be translated into actual sampling points by the pre-test survey team in the field.

Establishing a rapport with the plant personnel early ensures that on-site problems can be solved rapidly and with minimum disruption of plant activities. As an outgrowth of the pre-test survey planning, contacts with plant personnel are established. It is extremely important, at an early stage, to identify people or departments with whom the sampling teams will be interfacing.

Figure 1 is a sample form for a pre-test survey report. This form has been sectionalized for the logging of background information (prior to survey trip) and field information (during survey trip).

PRE-TEST SITE SURVEY REPORT

FIRM _____ DATE OF SURVEY _____

LOCATION _____ DATE OF TEST _____

BACKGROUND

PROCESS (PLANT) _____

(CONTROL) _____

OUTPUTS _____

SAMPLING AREAS _____

_____

REMARKS _____

_____

PLANT CONTACTS

	NAME	POSITION
1.		
2.		
3.		
4.		

FIELD DATA

SAMPLING LOCATION (EPA METHOD 1)

SHOW DIMENSIONED SKETCH

DOWNSTREAM DIAMETERS TO NEAREST FLOW DISTURBANCE ____

UPSTREAM DIAMETERS TO NEAREST FLOW DISTURBANCE ____

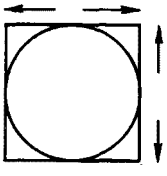

RECTANGULAR CROSS SECTION:

EQUIVALENT DIAMETER

$$D=2\left[\frac{(\text{LENGTH})\ (\text{WIDTH})}{\text{LENGTH}+\text{WIDTH}}\right]$$

TRAVERSE POINTS/PORT ____

PORTS ____ DIAM ____

LIQUID FLOW RATE _____ L/G RATIOS _____ VENTURI ΔP _____

SCRUBBER pH _____ EQUIPMENT DOWNTIME _____

PROCESS MONITORS (TYPE, LOCATION, CALIBRATION STATUS, NUMBER OPERATING, UNITS REPORTED) _____

_____

_____

Figure 1. Survey report sample.

PRE-TEST SITE SURVEY REPORT

FIELD DATA

SAMPLING AREA WORKING ENVIRONMENT (NOXIOUS GASES; TEMPERATURE; DUST LEVEL; RESPIRATORS REQUIRED; NOISE LEVEL; SAFETY; WALKWAYS; PLATFORMS; SCAFFOLDING; LADDERS - OSHA STDS.) _____

WORKING AREA ACCESS _____

PULLEYS AND WINCHES REQ D ☐YES ☐NO FIXATION POINTS AVAILABLE ☐YES ☐NO

STORAGE AND LAB FACILITIES _____

ELECTRICAL OUTLETS _____

CIRCUIT BREAKER BOXES _____

EQUIPMENT CHECK LIST

- ☐ POLAROID CAMERA AND FILM
- ☐ PITOT TUBE
- ☐ DRAFT GAUGE
- ☐ THERMOCOUPLE
- ☐ VOLTMETER OR PORTABLE THERMOCOUPLE GAUGE
- ☐ ICE AND CONTAINER
- ☐ BAROMETER
- ☐ THERMOMETER
- ☐ GAS DETECTION TUBE KIT
- ☐ PROBE - 13 MM
- ☐ TEE - 13 MM
- ☐ FITTING - 13 MM
- ☐ HOSE
- ☐ PUMP (SEVERAL LITERS PER MINUTE)
- ☐ HARD HATS
- ☐ SAFETY SHOES
- ☐ RAIN GEAR
- ☐ EARPLUGS
- ☐ WATER JUGS
- ☐ SALT TABLETS
- ☐ FIRST AID GEAR
- ☐ PORTABLE TAPE RECORDER
- ☐ U-TUBE MANOMETER

Figure 1. Survey report sample (continued).

2.2 PRE-TEST SITE SURVEY

A decision to test a particular plant should be made soon enough to allow a reasonable lead time before the actual test. It is recommended that the pre-test site survey be completed at least two weeks before the period of equipment assembly and checkout. This allows time for either equipment modifications or the acquisition of special equipment.

2.2.1 Survey Team Logistics

The survey team should check on hotels, restaurants, and equipment facilities available within an hour's ride of the sampling site. A vendor for ice or dry ice should be located. Plane schedules for the nearest commercial airport should be obtained. The equipment required for the survey team is listed in Figure 1. (If an emergency requires additional equipment to complete the test, the equipment can be shipped as airline baggage to eliminate the restriction of freight office hours.)

2.2.2 Test Site Inspection

Upon arriving at the test site, the survey team should meet with the plant engineer. Here, questions that arose from studying the schematic of the plant can be addressed. All pre-selected sampling points should be verified as areas where representative samples can be taken.

Process data such as fuel and air consumption, type of fuels, power output, water consumption, system pressure, and temperatures at sampling points can also be obtained from the plant engineer. For wet scrubber control processes, typical questions would concern liquid flowrate, L/G ratios, ΔP in venturi, and pH of scrubber. Information concerning process schedules and equipment downtime should be obtained. Another point to be investigated with the plant engineer is the use of process monitors. What type of monitors are used and where are they located? Have they been calibrated lately? How many are operating and what are the units reported? Will this information be available during the sampling test? This data will provide a record of the particular process that will be operating during the time the sampling test is performed. The availability and reliability of these monitors directly affect the amount of monitoring equipment needed by the sampling team. On a short-term basis, the availability of stack gas composition data

will determine the need for the type of measurements to be made by the survey team.

Under the guidance of plant personnel, a general tour of the plant should be taken to clarify the plant's operational layout, as well as to locate sampling points and their relationship to stairs, elevators, and storage areas.

2.2.3 Sampling Point Selection

The selection of a sampling point for any type of sampling (gas, liquid or solid) depends on four factors:

- Representative location
- Working environment
- Accessibility
- Sources of contamination

The most important issue of stack or duct sampling for gas or particulate matter is obtaining a representative sample; this is best done by adhering to the specified test requirements. Therefore, the survey team's prime consideration is to determine if a sampling point satisfies the requirements of the specified test.[1] In most cases, sampling ports are not placed with EPA Method 1 requirements in mind, but are located for the convenience of plant personnel. If a choice is possible, the requirements of EPA Method 1 should be satisfied.

Typical liquid and slurry process streams (fossil fuel combustor or coal processing plant) are closed piped systems, settling tanks, flyash ponds, and slurry disposal areas. Many of the factors that apply in sampling particulate-laden gas streams must also be considered in sampling liquid and slurry streams, although their relative importance may vary. Since a plant may have many liquid stream outlets from a given process, it is important to determine the portion of the total outflow that the chosen liquid stream represents.

Once the locations that will provide a representative sample are found, the survey team should consider the working environment at each location. Are noxious gases present? What is the temperature in the sampling area? How heavy is the dust level? Will respirators be required? If so, for

what gases? What is the noise level? Is the area safe (railing, lighting, footing, etc.)? Is the area protected from the environment in the event of rain or strong winds? All of these issues in some way affect the performance of the sampling team. The time to insist on safe scaffolding and ladders is during the pre-test plant survey. All plant conditions should meet OSHA standards.

Ease of access to a given source goes hand-in-hand with the test site environment. Since sampling personnel must be able to carry their equipment to the sampling point, elevators or stairways must be found that will accommodate the team members carrying equipment. For heavy equipment, fixation points for pulleys and winches must be located that are both safe to plant personnel and equipment and close to the sampling point. If the sampling location is not easily accessible, provisions should be made to enlist help from plant personnel for the transport of the sampling equipment (sometimes weighing as much as 200 to 300 pounds) from ground level to the sampling location.

The selected sampling points must be fully characterized so equipment needs and designs can be finalized before the sampling test. Polaroid snapshots can fix the relationship of beams, pipes, and obstructions to the sampling point. Careful measurements should be taken so distances from obstructions, duct diameters, distances from duct obstructions, and port diameters are well established. Notes should be taken on necessary equipment (ladders, ropes, pulleys, etc.). If existing ports are to be used, the plugs should be checked for rust and ease of removal. By removing the port caps, the duct wall thickness can be checked and the type and quantity of gases the sampling team will encounter can be determined.

Of extreme importance is the need for electrical outlets. Several outlets on different circuits should be found that provide 115 volts and 20 amps. In addition, circuit breaker boxes should be located for the outlets. Plug connector requirements must be detailed.

Field sampling for trace materials requires extreme cleanliness in the field as well as in the laboratory. In exposed sites, dust can be blown into the impinger solution or filter while loading or unloading a sampling train. The survey team must note the location of the sampling points with

respect to plant laboratories or parking spaces adequate for an equipment van so that provision can be made for sample handling in a closed environment. Because of the chance of contamination, the sample recovery area (parking area for the van) should be located as close as possible to the sampling points. If the plant has a laboratory, permission to use its facilities should be obtained. A tour of the laboratory will clarify the types and quantities of chemicals and equipment available. If equipment is to be left overnight, a secure area must be found for its storage.

2.2.4 Flow Measurements and Grain Loadings

Besides characterizing the sampling point, the survey team should be equipped to measure key stack parameters. However, the equipment required is not elaborate, since the responsibility of the survey team is to provide only approximate information about process conditions and pollutant concentrations. Stack temperature, gas composition, and grain loading should be checked and grab samples of streams, settling ponds and solid wastes should be obtained for survey level analyses.

The equipment necessary for these measurements should be kept to a minimum. A pitot tube and draft gauge are adequate to determine the pressure head in the stack. A thermocouple can be attached to the pitot and the readings can be obtained from a voltmeter or a portable thermocouple gauge. Calibration of the thermocouple can be checked against an ice-water bath ($4^{o}C$ or $39^{o}F$). If the pressure in the stack is less than 2.5 cm (1 in.) of water, the draft gauge can be used to measure stack pressure by attaching the static line to the gauge and leaving the other end of the gauge open to the atmosphere. If the pressure in the stack exceeds this amount, then a U-tube manometer is required. A barometer should be used to measure the atmospheric pressure.

2.3 TEST SCHEDULING AND LOGISTICS

Several factors need to be considered in selecting a test date. The choice of test conditions, personnel, and equipment will affect and determine scheduling. Time must be allowed for acquiring or modifying equipment and developing special methods if the test program is unusual in scope or complexity. Consideration must be given to the availability of other personnel (e.g., federal or state inspectors) who may wish to witness the

sampling test. The test date must also be coordinated with plant management to ensure that the process will be operating under the conditions desired for the test. If the process operates continuously, the choice of a sampling date can be a matter of convenience for all concerned. However, if the process operates only a few hours a day or on an erratic basis, then time also becomes a restraining factor in the experimental design. The sample time for the selected method cannot exceed operation time of the process. The testing dates must be planned with the plant personnel so as not to conflict with construction and maintenance operations which would produce nonrepresentative test conditions.

2.3.1 Test Matrix Development

Once the sample team has returned from the pre-test site survey, the preparation of a test matrix should begin. Any samples the team has collected should be analyzed for trace metal concentrations. These values, together with the process information (was plant running at 50, 70, 100 percent capacity), and the expected production schedules, will determine the nominal sampling times necessary to obtain enough material for reliable analytical results. Given the time budgeted for the test, a rough number of time slots can be established. Rather than establishing rigid test schedules, a flexible matrix of tests should be constructed. Developing a test matrix allows the team coordinator to identify reasons for establishing priorities among the various tests. The test matrix chart becomes a "roster" and the team coordinator is the "manager" who, depending on the situation, might wish to substitute a player.

Once the type and number of tests to be run are identified, a code system should be established. Within the framework of the test matrix, all chemical, bottle and filter requirements should be compiled and specific material allocations and assignments made.

2.3.2 Pre-Test Personnel Briefing

As soon as the test matrix has been established, personnel and equipment needs should be finalized at a pre-test briefing. This meeting should be held with all the personnel associated with the sampling effort. An alternate should attend this meeting, so that if a team member becomes sick or is injured in the field, a replacement is available.

The first meeting should brief the team on the expected test date, on a projected daily schedule of time slots for sampling, on the objectives of the test matrix, and on the physical appearance of the test points. The Polaroid snapshots and rough sketches resulting from the pre-test site survey can be distributed for comment and recommendations. Even though specific assignments will be made at the meeting, each team member should realize that he may be called upon to work any phase of the test program. Since all facets of the test are interrelated, team members should be cautioned to not become so involved in only their phase of the preparation that they are unaware of or misunderstand activities and problems associated with other phases of the test program.

2.3.3 Sampling Team Organization and Equipment

The normal breakdown of responsibilities among the team members is outlined in Figure 2. A checklist of items for field use must be compiled. A typical checklist for a two-point, 20 test effort is shown in Table 1. This list assumes that as much equipment assembly, such as lining the probes with Kapton, as possible is done in the laboratory prior to leaving for the field test. Additional items are needed in order to line probes in the field; these items are listed in Section 3.2.3, along with directions for insertion of the liners.

Another important equipment consideration is the fabrication of suitable shipment containers in order to ensure the safe transport of fragile apparatus and to protect the collected samples from loss or contamination. Individual "tote" boxes should be used to hold specific sampling train components, and specially designed shipping boxes should be constructed to

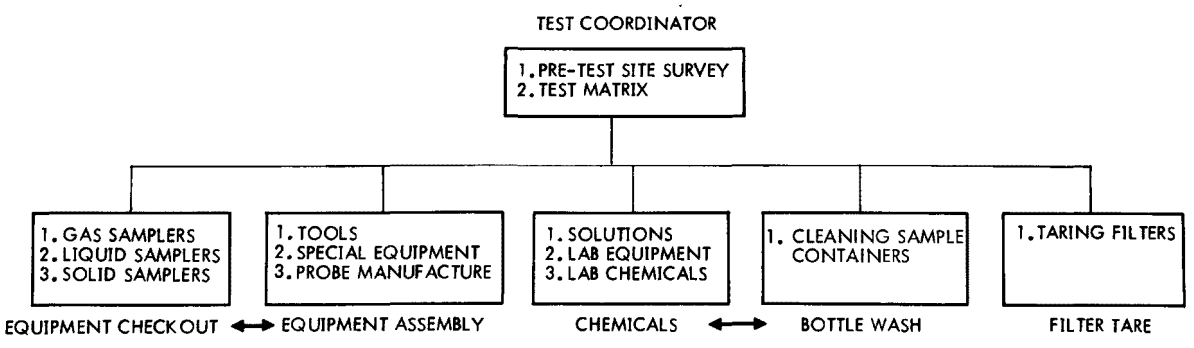

Figure 2. Sampling team task assignments.

TABLE 1. EQUIPMENT INVENTORY FOR TYPICAL TWO-POINT, 20 TEST GAS SAMPLING TASK

Quantity	Description
Electrical Equipment	
4	Eight-foot extension cords (12A)
1	Three-prong adapter
1	Six-outlet adapter
	Miscellaneous electrical adapters
	Box of fuses (20A)
1	Three-way plug
1	Two-way plug
3	Small variacs
2	Large variacs
8	Fifty-foot extension cords (12A)
1	Six-foot extension cord (12A)
1	Quad box with 20 feet of extension cord (30A)
1	Twenty-five-foot extension cord
1	Fifty-foot, 220 V extension cord
	Electrical connectors
	Electric tape
	Spare light bulb for flood lamp
	Light bulb for extension cord
3	1.5-watt walkie-talkies (3 channel)
Personnel Equipment (crew and spares)	
	Safety helmets
	Pairs of coveralls
	Ear protectors
	Pairs of goggles
	Dust respirators
	Pairs of leather gloves
	Pairs of asbestos gloves
	Sets rain gear
	First aid kit

(continued)

TABLE 1. (CONTINUED)

Quantity	Description
Aerotherm and Other Sampling Equipment	
2	Aerotherm pumps
2	Controllers
2	Ovens in cabinet
2	Aerotherm horizontal mounting stands
20	Probes (0.5-inch stainless steel Kapton lined) of appropriate lengths for test site
20	Bushing inserts
2	Standard pitot tubes (8-feet)
1	High velocity standard pitot tube plus extensions to 8 feet
4	Caps for sampling with 1-1/4-inch hole in center
10	Thermocouple connectors (spares)
1	Roll thermocouple wire (Chrome-Alumel) (spare)
10	Heating tapes — 6-feet (spares)
1	CVE liquid and slurry sampler
Miscellaneous Equipment	
1	200 feet of 1/2-inch rope
2	Six-gallon canvas buckets with 200 feet nylon rope
12	4 x 4 wooden blocks
2	Styrofoam ice chests
1	Oxygen-propane torch
	Sketch boards plus tablets
4	Boxes disposable towels
	Assorted tarpaulins
1	Four-foot folding ladder
1	Camel hair brush
10	No. 7 stoppers (1/2-inch hole)
2	Paper notebooks
1	Suitcase

(continued)

TABLE 1. (CONTINUED)

Quantity	Description
Miscellaneous Equipment (continued)	
1	Small tool box
	Pliers
	Tape measure
	Epoxy glue
	Assorted screwdrivers
	Files
	Allen wrenches
	Calipers
	Drill sets
	Teflon tape
1	Large tool box
	Assortment of wrenches (crescent, wrench sets, etc.)
1	Solder gun
1	Voltmeter
1	Drill — 1/4-inch
1 roll	Glass tape
1 roll	Thermocouple wire Type K
1 roll	Thermocouple wire Type T
	Miscellaneous 1/2-inch fittings
1	Multi-speed Saber saw plus two blades
1	Saw
2	Lab jacks
1	Heat gun
1	Vacuum pressure gauge 9-30 psi absolute
1	Small portable vise
1 roll	Black tape
1 roll	Box tape
1	Stop watch
1	Pulley
	C-clamps
	WD-40 lubricant
1	Five-pound hammer
	Socket sets
	Sandpaper (various grades)
2	Twenty-four inch pipe wrenches
1	Thirty-six inch pipe wrenches
Sample Boxes	
4	20 x 14 x 25-inch shipping boxes made of 3/4-inch plywood with aluminum reinforced edges
2	16.5 x 16.5 x 18.5-inch shipping boxes made of 3/4-inch plywood with aluminum reinforced edges
20	11 x 6 x 16-inch module tote boxes

protect the "tote" boxes and contents during shipment and to act as on-site cabinets during field operations. Suitable tote and shipping boxes are described in Table 1.

The chemicals task assignment assumes responsibility for collecting assorted laboratory equipment (squeeze bottles, Nalgene graduates, etc.) and chemicals (distilled water, acetone, etc.) to support all field activities. Reagents for the oxidative impinger solutions must be pre-weighed or pre-mixed to correspond to the system established in the test matrix. Table 2 lists the chemicals and lab equipment needed for a two-point, 20 test effort.

The bottle wash task is an important one. A special acid wash is required for all bottles used to store samples collected in the field. The chemical stores and bottle people must coordinate their efforts. A count of the number of sample bottles needed plus reserves should be given to the bottle person in time for the preparation of the proper number of bottles.

The last responsibility to be delegated is the task of filter taring. Normally, only one type of filter is used, but several could be needed because of a possible variety in sampling environments. A code system should be established for each type of filter. The filter person should convey to the team coordinator a complete list of filter types and weights. During a test, the filter used is noted on the data sheet and test matrix form.

Throughout the pre-test period, it is important to brief the team on the special requirements of trace metal sampling. Contamination in the laboratory or contamination in the field both result in loss of data.

2.3.4 Equipment Assembly and Checkout

Once the individual tasks have been assigned to specific team members, it is the responsibility of the test coordinator to monitor progress on each task and prevent problems from developing through continual review of work assignments and procedures. The test coordinator is also responsible for initiating design changes and ordering special equipment to meet the needs of the test matrix. For example, the sampling ports might require

TABLE 2. CHEMICALS AND LABORATORY EQUIPMENT FOR TYPICAL TWO-POINT GAS SAMPLING TASK INVOLVING 20 TESTS

Quantity	Description
8 l (2 gal)	Acetone, reagent grade
40 l (10 gal)	High purity, distilled water
450 g (1 lb)	$(NH_4)_2S_2O_8$
40 g (1.5 oz)	$AgNO_3$
500 ml (1 pt)	30 percent H_2O_2
500 ml (1 pt)	Concentrated nitric acid
500 ml (1 pt)	Concentrated hydrochloric acid
25	Sufficient tared filters in plastic bags for the test matrix including a 30 percent reserve
	Complete set of cleaned storage bottles for both impinger solutions and liquid, slurry, and solid samples (amount depends on test matrix)
100	Sheets, 46 cm x 61 cm (18" x 24") of Whatman No. 1 filter paper to cover bench surfaces
12	500 ml (1 pt) precleaned Nalgene bottles (spares)
2	Nalgene graduates, 50 ml
2	Nalgene graduates, 250 ml
2	Nalgene graduates, 500 ml
4	500 ml squeeze bottles
2	1000 ml squeeze bottles
4	Boxes disposable towels

special scaffolding to mount the sampling train for a vertical or horizontal traverse. Since the test coordinator has firsthand knowledge of the site, he is best suited to initiate the design of any special equipment.

The equipment and chemicals teams should assemble all required equipment and chemicals specified by the team coordinator (Tables 1 and 2).

Special attention should be paid to coordinating efforts between the bottle wash and equipment checkout people and the chemicals and equipment assembly people. Any additional equipment requirements (spare parts, special seals, etc.) should be communicated to the equipment assembly or chemicals personnel and added to the master lists.

Is possible, a separate room should be set aside for the storage of equipment and chemicals necessary for a sampling trip. This minimizes interference with other laboratory activities, and after the sampling trip an inventory can be quickly completed.

With the equipment stored in one room, equipment checkout consists chiefly of equipment set-up and appropriate testing to ensure the unit is functioning properly. Following checkout, it can be packed for shipping.

Packaging of sample containers and solutions is a very important part of equipment assembly. Care must be taken that every sample specified in the test matrix has the appropriately labeled storage containers and reserves. The module tote boxes can hold ten 500 ml (1 pint) Nalgene bottles. These tote boxes are labeled on the outside with their test run number (normally one series to a tote box). These tote boxes are then inserted into the shipping boxes which are foam padded and lockable. Each shipping box is labeled with its contents. In the field the shipping boxes act as cabinets to prevent contamination and promote organization of samples.

After the equipment has been assembled, checked out, and packed, one last meeting should be held to verify test procedures and assignments. This last meeting verifies that all team members understand the goals of the test program and can perform the sampling test.

CHAPTER III

FLUE GAS SAMPLING

Determining trace element levels in flue gas (FG) source streams is similar to standard particulate sampling techniques, but requires several special considerations. The problems encountered and the techniques used for obtaining representative samples of source streams are common to both particulate sampling and trace material sampling. The differences and special considerations peculiar to trace element source sampling are concerned with contamination of the sample, sample alteration, equipment selection, and the properties of trace materials in sampling systems. The following paragraphs discuss the peculiarities and problems associated with trace element source sampling and present recommended procedures.

3.1 SPECIAL CONSIDERATIONS

3.1.1 Contamination and Alteration of Sample by Sampling Train

When sampling FG streams to determine particulate loading, care must be taken that the samples do not become contaminated or altered. The same problems exist when sampling for trace elements, but, in addition, close attention must be given to material compatibilities with the sampling system and the sample itself. An assessment of the compatibility of a trace element sample begins at the sample probe and extends to the laboratory environment where the sample is analyzed.

The sample is first exposed to the sampling nozzle and probe. The conventional materials which have been used to construct these components are stainless steel, glass, quartz, and Teflon or Teflon-coated steel. Since the particulates are analyzed for Ni and Cr, stainless steel presents a contamination problem for Cr, Ni, and other elements contained in stainless steel. Glass and quartz sampling trains have notorious breakage problems. Teflon or Teflon-coated components are excellent but have a temperature limit of 230°C (450°F).

Although the standard sampling nozzles and probes are adequate for many applications, a more universal approach using a removable probe liner is recommended. The use of a liner prevents sample contamination and

facilitates probe cleaning. The recommended liner material is a high temperature, thermally stable polyimide, Kapton*, which is manufactured by DuPont. The material is thermally stable in air to 450-500°C (842-932°F), and has demonstrated stability up to 400°C (752°F) in combustion gas streams. At present, there is no known organic solvent for the film; strong alkali, however, will dissolve Kapton. It is infusible as well as flame resistant. The results of a spark source mass spectroscopic analysis of the film material indicate that Kapton does not represent a significant source of contamination for trace element sampling.

As with the nozzle and probe, the cyclone and filter of the sampling train present possible sample contamination or alteration problems. In the case of cyclones constructed of stainless steel, the potential for sample contamination by Ni, Cr, and other elements may be higher than in the case of the probe due to the increased possibility of surface abrasion. Sample contamination by filters is more subtle. Because of the high temperature requirement, filters made of glass fiber or quartz materials are typically chosen. However, these materials have relatively large concentrations of several elements which are of interest in trace material sampling. A few commercially available, high purity quartz filter materials have been fabricated especially for trace element collection, and several other materials appear to be suitable for trace element sampling. Further discussion of these filters and new alternative materials are presented in Section 3.2.2.

The sampling train impingers and connecting hardware are another source of sample contamination. In these cooler train components, areas exist where condensed source materials or the impinger scrubbing solutions can corrode metal parts leading to sample contamination. Loss of trace materials due to adsorption and chemical reaction after condensation cannot be totally eliminated by using glass impinger systems. Even the reagent grade chemicals used in the impingers to scrub the volatile trace materials can have blank values higher than the actual sample.

---

*Registered trademark.

3.1.2 Multiphase Sampling Requirements

The requirement of collecting representative trace material samples from multiphase source streams expands the scope of performance of a given collection system. The sampling system must be able to collect materials in both gaseous and condensed phases. This can be readily accomplished using an EPA Method 5 type source sampling train. With this type of train, those elements which exist as particulate matter in the stack are collected mainly in the cyclone or on a filter, while those vaporous or submicron size elements, which behave as gases, are collected in the oxidative impinger system. The distribution of elements within these components of the train has been found to be different for various elements, and appears to depend on the source from which trace materials have been sampled. The presence of emission control equipment, such as electrostatic precipitators, sulfur dioxide scrubbers, etc., significantly affects both the concentrations and the physical and chemical forms of the trace materials found in source outlet streams. Knowledge of the distribution of trace elements in the sampling train can greatly simplify sample collection and analysis.

3.1.3 High Volume Sampling Requirement

Regardless of whether the trace elements are collected in the particulate collection section or in the vapor scrubbing impingers of a sampling train, enough sample must be collected to ensure accurate and precise analysis. The exact amount of collected material required for elemental analysis depends on the particular analytical techniques used to determine that element. Procedures recommended in this manual generally require 1-100 μg of an element for analysis. Based on a need for determining source stream concentrations of 60 $\mu g/m^3$ (2.6×10^{-5}/grains ft^3) and a desire to keep the sampling time to two hours, the sample collection rate must be approximately 0.014 m^3/min (0.5 ft^3/min) to collect 100 μg of the element of interest. This is roughly the maximum sampling rate attainable with most commercially available Method 5 sampling units. Only one instrument manufacturer, the Aerotherm Company,* currently has available a Method 5 type source sampler capable of operating at sampling rates up to

*The Aerotherm Company, a Division of the Acurex Corp., Mountain View, California.

0.16 m^3/min (5 ft^3/min). By using the Aerotherm high volume sampler, adequate or excess amounts of sample can readily be collected. When analysis procedures are developed that require less than 1-100 μg of element and that are convenient and economical to use, other Method 5 type samplers with lower sample acquisition rates can be employed for trace element sampling.

3.1.4 Aerotherm High Volume Stack Sampler

A modified Aerotherm high volume stack sampler (HVSS) is the recommended Method 5 type sampler for trace element source testing. This HVSS unit operates at nearly ten times the sampling rate of other Method 5 sampling systems while maintaining the capability of collecting particulate samples for Method 5 particulate emission testing.

The Aerotherm sampling unit is shown schematically in Figure 3. The principal components are: the control unit, probe, heated particulate collection section, impinger system, vacuum pump, and umbilical line. A complete and detailed description of each of these components is not presented here, but can be obtained from the manufacturer. The following sections discuss these components in sufficient detail to permit an understanding of the modifications to the unit for trace element source sampling.

Table 3 summarizes the principal advantages and disadvantages of the Aerotherm HVSS unit.

3.1.4.1 Control Unit --

The control unit contains all the instruments required for measuring stack velocity, sampling flow rate, cumulative flow, and temperatures at various points in the sampling system. All of the controls for the sampling system are located in the control unit with the exception of the valves for controlling sample flow rate. These values are mounted on the vacuum pump, which is positioned adjacent to the control unit when the sampling system is in operation. Thus, all controls and measurement displays are centered about the control unit and permit operation by one individual.

TABLE 3. PRINCIPAL FUNCTIONAL ADVANTAGES AND DISADVANTAGES OF AEROTHERM HVSS UNIT FOR TRACE ELEMENT SAMPLING AND GENERAL SOURCE PARTICULATE TESTING

Trace Element Sampling Advantages	
Sample collection rate	Up to 0.17 m^3/min (6 SCFM)
Impinger assembly	Rugged Lexan construction, easy to clean with O-ring seals. Separable from oven and capable of operating at sampling rates of 0.23 m^3/min (8 SCFM).
Adaptability	Original construction design permits use of probe liners and nonstandard filter materials.
Operating temperature	Up to 260°C (500°F) for probe and oven and even higher with some modifications.
General Source Testing Advantages	
Source access requirement	Rotatable probe capable of sampling horizontal and vertical source streams.
Electrical design	Circuit breakers used instead of fuses and separate power wiring for heaters and pump to assure required power. Digital display of temperature.
Mechanical strength	Rugged and well-packaged for shipment.
Flow measurement capability	Two magnehelic gauges for accurate readout over pitot tube range of 0-10 cm (0-4 in.) of water.
Pump characteristics	Oil-free vane type pump modified for low leakage.
Trace Element Sampling Disadvantages	
Particulate collection system	Cyclone filter and connecting hardware possible source of Ni, Cr, and other stainless steel elements. Teflon-coated filter housing possible source of particulate sample alteration. Filter design distributes particulate nonuniformly across filter.

(continued)

TABLE 3. (CONTINUED)

Trace Element Sampling Disadvantages	
Gas cooling coils	Difficult and time-consuming to clean between sampling runs. Shows potential for corrosion and impinger sample contamination.
Impinger assembly	Stainless steel connecting hardware subject to corrosion and not compatible with strong oxidizing scrubbing solutions unless coated inside and out with Teflon.
General Source Testing Disadvantages	
Unit physical size	Larger and heavier than low volume Method 5 samplers.
Total power requirement	Greater than 1.65 kilowatt (15 ampere, 110 V) which is a common electrical power outlet rating.
Traversing hardware	Extremely heavy and somewhat difficult to assemble. Not adaptable enough to meet all source sampling conditions.
Probe	Heavier than necessary and requires 5 cm (2 in.) minimum port access hole; "no breakdown" 3 m (10 ft) probe for easy shipping and general sampling needs.
Component connectors (gas flow)	For the most part they are not quick disconnect type and are difficult to work with while hot.
Cyclone and filter hardware	Present Teflon gaskets and coated hardware not compatible with high temperature (>260°C or 500°F) environments.
Impinger assembly	Not equipped with check valve to prevent backflush in case of pump or electrical failure.

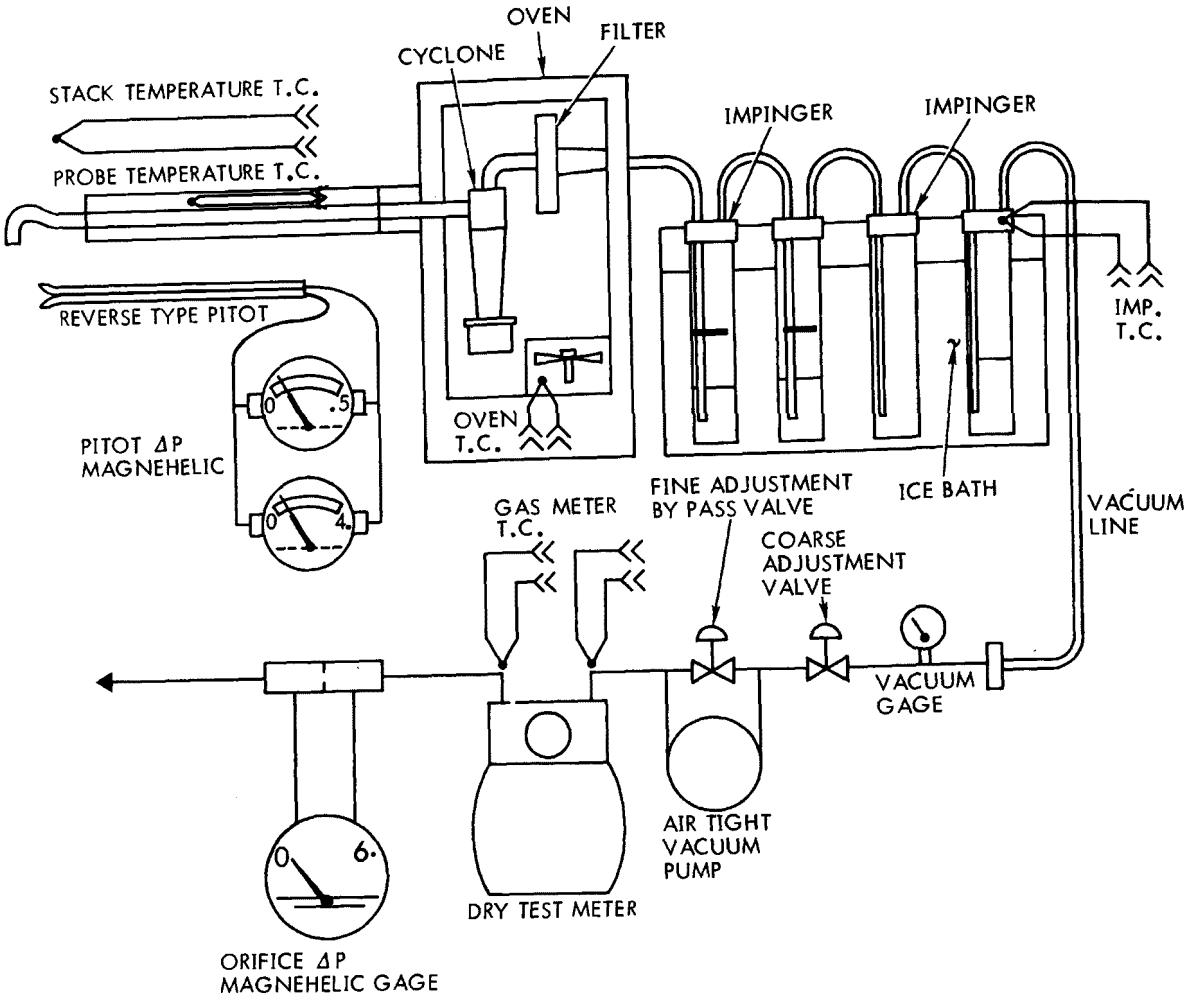

Figure 3. Aerotherm high volume stack sampler schematic. (Cooling coils not shown.)

3.1.4.2 Probe and Nozzle --

The probe and nozzle components of the Aerotherm unit are similar in design to those used in other Method 5 samplers. The stainless steel probe is wrapped and heated with a fiberglass insulated strip heater. A liner made of Kapton is placed in the probe and a specially fabricated bushing is inserted at the tip to direct the incoming flue gas past the edge of the film (see Figure 4 and Section 3.2.3). Swagelok tube fittings are used for nozzle and cyclone-filter connections. The heated sampling tube, S-type pitot, and thermocouples are sheathed in a stainless steel tube for mechanical support and protection from the stack environment.

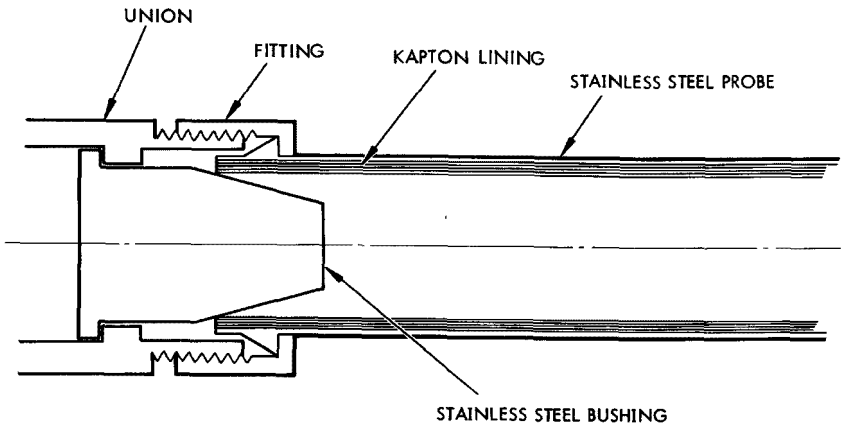

Figure 4. Schematic diagram of Kapton liner inside probe tube.

3.1.4.3 Particulate Collection Section --

This section consists of a cyclone, filter, and oven. The cyclone and filter are constructed of stainless steel. Standard stainless steel Swagelok fittings are used to connect this hardware with the probe and impinger assembly. The operation of this section is such that the filter may be used alone for particulate collection, since the cyclone unit can be removed and the probe connected directly to the filter housing. The interior of the filter housing is Teflon coated and the sealing gasket for the cyclone is also made of Teflon. The oven is capable of heating the cyclone and filter to 260°C (500°F). The use of Teflon presents a problem in handling gas streams at temperatures higher than 230°C (471°F).

3.1.4.4 Impinger System --

The impinger train for the Aerotherm sampler is unique. It consists of gas cooling coils, a pre-cooler trap, and a set of four impingers. Gas cooling coils are not needed in standard EPA Method 5 trains, but are required for the HVSS due to its higher flow rate. The impinger assembly for the HVSS is not constructed of glass, and is larger than the regular Greenberg-Smith impinger (250 ml charge versus 100 ml charge) used in Method 5 trains. The four impinger bottles are constructed of durable Lexan (polycarbonate) plastic. The interconnections between the impingers

are made of stainless steel pipe and Swagelok fittings. This connecting hardware must be Teflon coated to prevent corrosion by the oxidative impinger solutions and subsequent contamination of the sample. The impingers are sealed with large diameter Lexan caps using O-rings, and thus the interior of the impinger is completely accessible for easy rinsing and cleaning, which is important for trace element sampling. Unlike ground joint systems for glass impingers, O-ring seals do not require a layer of grease (a source of trace element contamination) for sealing, and are not subject to seizing. They are consequently easier to assemble and disassemble.

Preceding the impingers are three meters (10 ft) of stainless steel cooling coils and a small Lexan collector for water condensate (pre-cooler trap). The pre-cooler trap, like the regular impingers, uses an O-ring seal. The cooling coils, pre-cooler trap, and set of four impingers can be chilled with ice water or a mixture of dry ice and water.

3.1.4.5 Vacuum Pump --

A vane-type vacuum pump is used. This pump has a 3/4 hp motor, a flow rate of 10 ft^3/min (0.28 m^3/min) at 0-inch Hg, and weighs approximately 27 kg (60 lb) including all fittings. Some important features of this pump include:

- Smooth, pulse-free flow
- High vacuum capacity
- Self-lubricating carbon vanes
- Special shaft seal
- Coarse and Fine flow control valves located on pump
- Carrying handle
- Aluminum filter and muffler jars
- Vacuum gauge to indicate filter condition
- Quick disconnect fittings.

3.1.4.6 Umbilical Line --

The control unit and pump are connected to the remainder of the system through a pneumatic hose and an umbilical line consisting of a number of electrical lines, thermocouples, and pitot tube connections. The

umbilical provides all essential connections between the sampling train and the control unit. Its significant features are:

- Quick disconnect fittings
- Smooth, kink-free, waterproof sheath for enclosing all lines
- Mating ends of connectors configured so that umbilical line length can be increased.

3.1.5 HVSS Components — Selection and Design Recommendations

3.1.5.1 Probe Material Selection --

Standard HVSS probe designs consist of a heated tube equipped with an outer protective sheath and a sampling nozzle. Construction materials are typically carbon steel, aluminum, stainless steel (several types), glass, quartz, and Teflon-coated materials (Section 3.1.1). The relative merits of these materials as probe materials are tabulated in Table 4. As indicated in the table, aluminum probes have the lowest operating temperature limit while quartz has the highest limit. Above approximately 250°C (482°F), aluminum and many of its alloys rapidly lose their physical strength, but their light weight make them attractive for particulate sampling in stacks having large diameters. Both glass and quartz exhibit excellent chemical inertness except for possible reactivity with fluoride as hydrogen fluoride. Glass or quartz probes would not be sources of sample contamination in trace element sampling. For sampling source streams that require probes longer than 5-6 ft (1.5-2 m), glass and quartz become impractical because of breakage problems and use of a mechanical support is recommended. The combined probe and support (usually made of stainless steel) produce a heavy and cumbersome probe.

Carbon steel, while having a high temperature limit, is readily corroded by many stack environments and is a source of Mn and other low percentage steel elements. It has not been widely used for stack sampling. Teflon-coated probes are excellent from a contamination standpoint for trace element sampling, but they do not quite have an adequate temperature limit for many sampling situations. Stainless steel is perhaps the most common material used for probe construction. It has a high operating temperature limit and is usually readily available. However, particulate

TABLE 4. PROBE MATERIALS AND SELECTION CRITERIA

Material	Operating Temperature, °C (°F)	Cleaning	Handling	Contamination/ Sample Alteration
Aluminum	250 (482)	Difficult	Lightweight	Depends on alloy
Carbon steel	>900 (>1652)	Difficult	Heavy	Yes, possible Mn and other elements
Glass (Borosilicate)	820 (1508)	Difficult	Fragile	No contamination, possible loss of F
Quartz	>1500 (≥2732)	Difficult	Fragile	No contamination, possible loss of F
Kapton liner	450-500 (842-932)	Very easy	Somewhat involved	None
Teflon coating	<260 (<500)	Easy	Satisfactory	None
Stainless steel (316)	900 (>1652)	Difficult	Heavy	Cr, Ni, other stainless elements
Titanium	>1000 (>1832)	Unknown	Lightweight	Depends on alloy

material collected using stainless steel probes has shown Ni, Cr, and other element contamination. Probes constructed of stainless steel are not lightweight, especially if stainless steel sheath tubes are used as protective outer covers. Particulate material from some sampling environments strongly adheres to the surface of stainless steel, thus presenting a cleaning problem.

Titanium and its alloys are finding use as probe construction materials. Their high temperature stability and light weight make them attractive sampling probe materials. As with any probe, sample contamination, alteration and recovery are still unresolved problems. Sample recovery is especially important since, under certain sampling conditions, the amount of material deposited on the probe walls can approach 50 percent of the total particulate material collected. This material must be cleaned from the probe and added to the sample collected on the filter for source particulate determination according to Method 5 procedures. The same procedure also applies to trace element source sampling to obtain accurate trace element emission results. However, probe cleaning is difficult and time-consuming under field test conditions. Rinsing and brush cleaning procedures are also inadequate for strongly adherent particulates, resulting in biased particulate loading results. For trace element sampling, the problems are compounded since the probe cleaning procedure exposes the collected sample and washings to field contamination. It is possible at some industrial plants to collect more sample material in a few minutes of "cleaning" the equipment outside a stack than during an hour of source sampling. Leaded vehicle exhaust, windblown dust, and scrubber and cooling tower mists, for example, can contaminate carefully collected source samples and void trace element test results.

For these reasons, a completely different approach to sample recovery from the probe is recommended for trace element particulate sampling. This approach utilizes an inert removable liner inside the normal sampling probe. The recommended liner material is Kapton film (see Section 3.1.1), which is an inert, clean, high temperature (400°C) polymeric film.

Figure 4 shows a schematic diagram of the liner location inside the probe tube. Except for the short sections of the stainless steel nozzle

and bushing insert, the stack gas sample is in contact with the Kapton liner until the sample enters the particulate collection system and the remainder of the sampling train. The liner can easily be removed after sampling and immediately placed in a sample storage bottle. A new liner is then inserted for the next sampling task. The use of a liner greatly simplifies recovery of probe material for analysis and reduces cross-contamination between tests. It is also possible, though it has not been demonstrated, that the liner approach may lead to more accurate and reproducible Method 5 particulate measurements.

3.1.5.2 Filter Selection --

Materials and filter types that have been typically used for general particulate sampling have contained high and variable amounts of several trace elements. Extraction procedures developed by many laboratories for removing these contaminants have been only partially successful. Materials suitable for source particulate and trace element sampling recently have been developed. The following paragraph describes filter materials that have been successfully and unsuccessfully used for trace element sampling.

Table 5 lists some of the filter materials that have been used for trace element sampling and some key properties. Of the materials listed, only two filter types have been field tested with the Aerotherm HVSS unit: Kreha carbon fiber and Gelman Spectro Grade Type A filters. The trace element content of both materials has been assessed and found acceptable. Each package of filters purchased from Gelman is supplied with a trace contaminant assay for 25 common elements. Kreha carbon fiber material is not analyzed by the manufacturer, but a spark source mass spectroscopic (SSMS) analysis of samples of Kreha filter material has shown it to have a low trace element content, except for fluoride. Trace contaminant analyses of many of the other filter materials are presented in References 2, 3 and 4.

The relatively low operating temperature (<100°C or 212°F) for Gelman Spectro Grade glass fiber filters is required to protect the surface treatment used on the filter to prevent the oxidation of sulfur dioxide to particulate sulfate. The filter can be used at temperatures several hundred

TABLE 5. FILTER MATERIAL FOR TRACE ELEMENT SAMPLING

Filter Material	Purity	Temperature Limit, °C (°F)	Efficiency	Utility	
				ΔP	Strength
Carbon fiber (Kreha Corp.)	Good except for F	>500 (>932)	Low	Low	Good
Cellulose paper (Whatman 41)	Poor	<200 (<392)	Medium	Medium	Good
Graphite (Poco)	Excellent	>1000 (>1832)	High	High	Good
Glass fiber, spectroquality (Gelman Instr. Co.)	Excellent	>100 (>212)	High	Medium	Good
Microquartz fiber (Under development) (Arthur D. Little Co.)	Excellent	800 (1472)	High	Medium	Good
Teflon membrane	Excellent	<250 (<482)	High	Extremely High	Good
Tissuquartz (Pallflex Co.)	Excellent	800 (1472)	High	Medium	Poor
Sintered Silver	Excellent	<900 (<1652)	Undetermined	Medium	Good but corrodes readily

degrees higher if the protective surface coating is not required. The Kreha material is stable to about 500°C (932°F) in air and other oxidizing environments. The filtering efficiencies of the two materials are also quite different. The Gelman product when tested with dioctyl phthalate spheres gave a minimum of 99.5 percent retention for 0.3μ particles. Data is not available for the Kreha material, but single pieces of the material used in the Aerotherm high volume sampler have been shown to pass large amounts of particulate matter. Of these two materials, Gelman Spectro Grade is recommended for trace element sampling.

3.1.5.3 Oxidative Impinger Solutions --

Oxidative impinger solutions are required for trace element sampling. Several elements (As, Hg, Se, Sb, F^-, Cl^-), are emitted in a vaporous state or as very fine particulate and are not collectible on filters. Of these, Hg is considered to exist in elemental form in many source emission streams, while arsenic, selenium, and antimony are thought to exist as vaporous oxides. Fluoride and chloride exist principally as hydrogen halide gases. If cooled to near ambient temperature and passed through chilled water impingers, trace quantities of As, Sb, F^-, and Cl^- can be nearly quantitatively collected. Selenium in source streams when cooled and contacted with aerated water is apparently oxidized and retained in solution. Of these vaporous elements, only mercury and cadmium are not trapped in a simple aqueous impinger. To sample for these elements an oxidative agent is needed. Any element or compound which passes through a filter because of its small size, can be collected in simple aqueous impingers if adequate contacting with the liquid is permitted.

In sampling for Hg in source streams, numerous oxidative scrubbers have been used. The most common have been acid permanganate, iodine monochloride, and hydrogen peroxide. Except for peroxide, these oxidative scrubbing solutions contribute a residue which interferes with the analysis of these solutions for other elements. In addition, the scrubbing efficiency of these solutions, except for permanganate,[5] has not generally been quantitative under source sampling conditions. This has been shown to be particularly true in collecting vaporous Hg using a high volume sampler where gas contacting times are very short. For these sampling conditions, oxidative

scrubbers are needed with higher specific rates or a better method of contacting the gas. The latter approach is impractical since the means used to achieve high contact times greatly increases the gas flow resistance through impingers. The alternative approach is to improve the reaction rate of the oxidative scrubber systems through catalysis or selection of new more potent systems.

An impinger system that is an effective scrubber for Hg in source streams using high volume sampling rates is aqueous ammonium persulfate catalyzed with silver ion. This system uses low concentrations of reagents so that contamination from trace materials in the reagents does not interfere with the analysis of trace elements collected during source sampling. This solution also quantitatively collects other vapor-phase trace elements. Catalyzed ammonium persulfate can theoretically oxidize chloride to chlorate or perchlorate based on reaction thermodynamics and thus can be used to sample for this element as well, if oxidation kinetics are satisfied.

All oxidative impinger solutions that are used for trace element source sampling must be protected from stack gas reducing agents which are capable of lowering impinger oxidizer concentrations to a point where the impingers are not effective scrubbers for trace elements. The major stack gas component which must be trapped before it reduces impinger oxident concentration is sulfur dioxide. A convenient and efficient means of accomplishing this is to precede the trace element scrubbing impinger(s) with a simple hydrogen peroxide impinger; the H_2O_2 concentration is determined by the concentration of SO_2 in the stack effluent and the volume of stack gas sample to be drawn through the impinger. The recommended impinger arrangement for sampling trace elements using the Aerotherm high volume sampler is shown in Table 6. The reagents used to prepare these solutions are readily available from a number of sources in high purity grades compatible for trace element sampling.

At present, acceptable alternatives to the catalyzed ammonium persulfate scrubbing impinger system cannot be recommended for use with the Aerotherm high volume sampler. For lower flow rate stack samplers, there are two acceptable oxidative systems. They are acidic permanganate[5] and iodine monochloride[49]. If Hg is the only vaporous trace element to be

TABLE 6. IMPINGERS FOR TRACE ELEMENT SAMPLING

Impinger	Reagent	Quantity
Condensate collector	Empty	--
No. 1	3M H_2O_2	250 cc
No. 2	0.2M $(NH_4)_2S_2O_8$ + 0.02M $AgNO_3$	250 cc
No. 3	0.2M $(NH_4)_2S_2O_8$ + 0.02M $AgNO_3$	250 cc
No. 4	Drierite or silica gel	225 g

examined, the dry gold amalgam tecnnique developed by TraDet, Inc.[6] can be used. These alternative oxidative scrubbers and amalgamation techniques require impingers to reduce SO_2 content before the Hg collection impingers or devices. Besides hydrogen peroxide and ammonium hydroxide, SO_2 scrubbers include water and saturated alkali carbonate solutions. The latter alternative, while more effective in removing SO_2 from the sampled gas stream, adds a considerable amount of solids to the impinger solutions which can lead to difficulties in analysis for trace elements collected in this impinger.

3.2 SPECIAL FIELD GUIDELINES FOR TRACE ELEMENT SOURCE SAMPLING

For the most part, the procedures and methods used in source sampling for trace elements are similar to those used in sampling for particulate matter. These are well described and documented[1, 7 and 8] and are not discussed here. This section presents those modifications to procedures for particulate sampling and the special considerations that apply to trace element source sampling.

3.2.1 Work Area and Contamination Considerations

Avoidance of contamination is of prime importance in trace element source sampling. Contamination considerations extend from the equipment preparative and packing stages to the analysis of the collected samples. Bottles in which samples are to be stored and shipped and reagents that are to be used must be free of trace element contamination. This requires special cleaning of bottleware and the selection of pure reagents and clean

materials. Bottleware used for packaging reagents for field use and storage of samples should be dedicated for this purpose and scrupulously cleaned before being put in storage for subsequent use. The bottle material should be high density and/or crosslinked polyethylene or polypropylene. If Teflon bottleware is available, it may also be used. Bottleware should be cleaned according to the procedure outlined in Chapter VII, and stored in clean containers in a non-laboratory area. Bottleware made from low density and/or linear polyethylene or polypropylene should not be used since these materials are made from recycled plasticware of varying composition and trace contaminate levels. Laboratories, by their nature, tend to be reservoirs of trace contaminants. Protective containers such as wood or laminated boxes are important since they can prevent permeation of vaporous Hg from such sources as broken thermometers from reaching plastic bottleware and contaminating the collected samples.

The purity of the reagents should be the highest available. J.T. Baker* Ultrex grade reagents are recommended for the preparation of the nitric acid, water, and ammonium hydroxide impinger and wash solutions. Ammonium persulfate and hydrogen peroxide are only available as analytical reagents, but the trace element concentrations for these particular reagents has been found to be acceptable.

The prevention of contamination should also be a factor in the selection of a base camp site for the field test. The base camp should be protected from wind and be away from vehicular traffic, process water sources, cooling towers, and overhead conveyor systems. Even when these precautions are followed, all solution transfers, impinger rinsings, and probe liner manipulations should be performed in the mobile laboratory van or trailer.

3.2.2 Filter and Impinger Solution Preparation

Filters for trace element sampling and source particulate determinations are prepared and handled in a similar manner. However, filters for trace element sampling require extra care to prevent contamination, since the filters will be chemically analyzed. Filters for trace element sampling should be stored in clean petri dishes until ready for use during the field test,

*J.T. Baker Chemical Company, Phillipsburg, N.J.

and extra filters should be taken to the field to be used later as blanks in the analysis scheme.

The filters are conditioned for 3 hours at 287°C (550°F) and desiccated for 12 hours prior to weighing. For the best results the filters in covered petri dishes should be stored in a desiccator prior to and after use in the field. On return to the laboratory the filters are desiccated for another 12 hours and then weighed.

Except for the ammonium persulfate impinger solution, all other impinger reagents and solutions can be prepared in advance of the field test and prepackaged in labeled bottles identified for a particular test run. At the time of the test, these bottles are laid out in an orderly fashion and the contents are then transferred to the appropriate impinger. The empty bottle is saved and refilled with the sampling solution after completion of the run. The ammonium persulfate impinger solution should be prepared immediately prior to a sampling run. The stability of the dissolved reagent is such that it loses one half of its oxidizing strength in 8 to 10 hours after preparation. In lieu of preparing this solution, the reagent can be weighed and prepackaged in dry labeled bottles for shipment to the test site. The solution can then be prepared on site by adding silver nitrate solution to the bottle and transferring the solution to the appropriate impinger. This approach of using prepackaged solutions and reagents saves a significant amount of time in the field.

3.2.3 Probe Liner Preparation, Installation, and Removal

At present, Kapton probe liners are made from a 0.002-inch thick film. A strip of material 7.5 cm (3 in.) wide is cut from a roll of the film. The length of the strip is the length of the probe that is to be lined. The 7.5 cm (3 in.) width corresponds to approximately two circumferences for the 1.3 cm (1/2 in.) diameter sampling probe for the Aerotherm unit. If larger or smaller diameter probe tubing is used, the width of the liner should be adjusted to give twice the probe tube circumference. A clean, unoiled knife such as an X-acto type can be used to cut the liner strip. Disposable, unpowdered polyethylene gloves should be worn during this cutting stage to reduce contamination from handling, and a clean work area should be used. After cutting, the film strip is dried overnight in a

110°C (230°F) oven. After drying, the film strip is weighed and the weight recorded. Insertion of the liner into the probe (shown in step-by-step photographs on the following three pages) is begun by wrapping the film around a 7 mm mandrel (usually a piece of stainless steel rod the length of the probe) and placing the rolled film strip and mandrel into a 10 mm (3/8 in.) OD Teflon or stainless steel tube (referred to as a straw tube). The ends of this tube are then capped and loaded into a larger plastic container tube for storage. In the field the straw tube containing the rolled film strip is inserted into the sampling probe, and the film is held while the straw tube is withdrawn, thus accomplishing the insertion of the film liner in the sampling probe. The insertion of the film liner in the field requires two people and less than five minutes. With the liner in the probe, the bushing insert and sampling nozzle are installed on the probe. The bushing insert conducts stack gases and particulate matter past the end of the film, thus preventing material from getting between the film and probe tube wall (see Figure 4).

Upon completion of a sampling task, the probe is disconnected from the particulate collection system and the nozzle is also removed. With the end capped, the probe is taken to a clean, wind-protected area and the liner is removed with a pair of forceps and stored in a clean, labeled polyethylene bottle or bag. A new liner can be installed and the next sampling effort started. If a probe liner is not used, the probe is cleaned by rinsing with high purity water and using a nylon or Teflon bristle brush if required. The particulate material and washings are put into a bottle.

3.2.4 Handling and Storage of Impinger Samples

When a sampling task is completed, the impingers are disconnected from the pump and particulate collection system and brought to the mobile laboratory for emptying, rinsing, and refilling. The contents of each impinger, including the pre-cooler trap and the silica or drierite filled impinger, are returned to individually labeled solution bottles. Each of the liquid impingers is thoroughly rinsed with three 50 cc portions of high purity water and these rinsings combined with each catch. The gas cooling

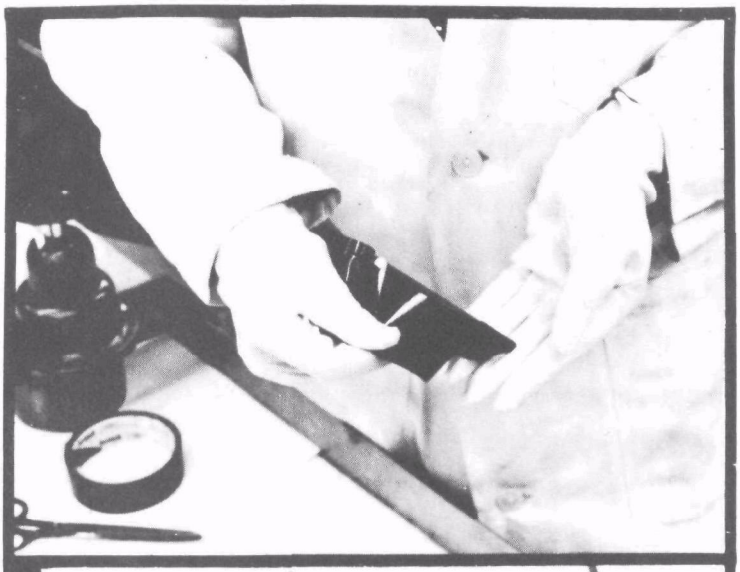

1. While wearing clean gloves, cut a 5 cm (2 in.) strip of Kapton adhesive tape and wrap once around one end of the mandrel (7 mm SS rod). Place end of Kapton liner half way down width of tape.

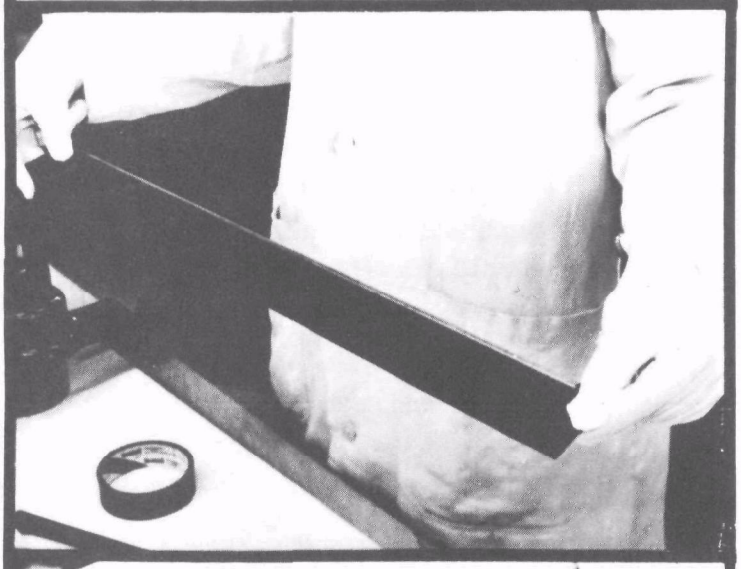

2. Partially unroll Kapton liner, holding the lengthwise edge against the mandrel. Have ready a cone made of a 30 cm x 6 cm (12 in. x 2 in.) piece of Kapton film rolled and taped such that the diameter at one end is 8-9 mm and at the other end is 12-13 mm.

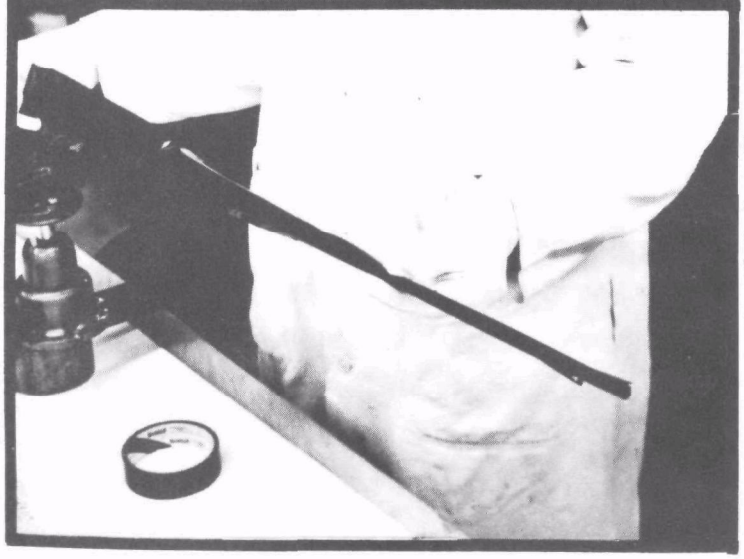

3. Wrap the remaining tape, with the Kapton liner inside, around the mandrel. As the Kapton is wrapped, slide the cone, larger end first, over the liner and mandrel. The cone will help curl the liner and hold it in place.

4. Roll the Kapton strip around the mandrel, sliding the cone over the wrapped liner as you go. When the cone clears the end of the mandrel, insert the tip into the straw tube (10 mm O.D tubing) so that the liner does not uncurl again.

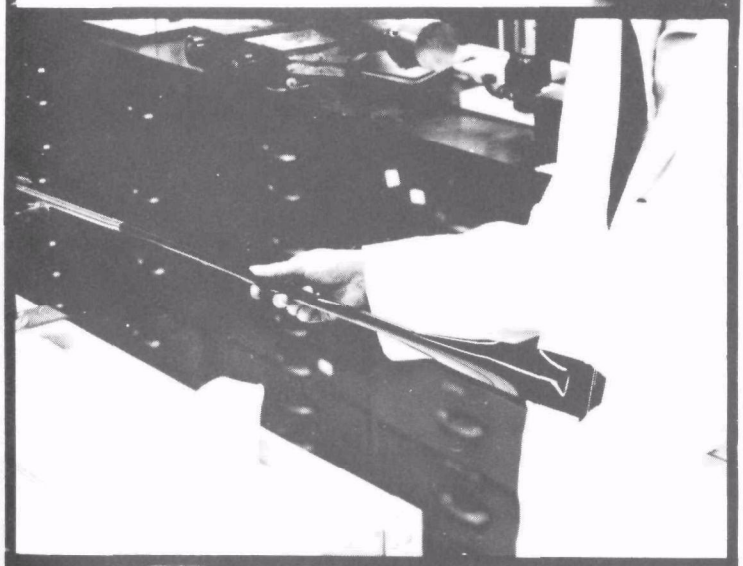

5. Continue to simultaneously unroll the Kapton strip, slide the cone over the curling Kapton, and insert the mandrel into the straw tube. The glove on the hand holding the cone may be removed at this time for easier handling of the cone.

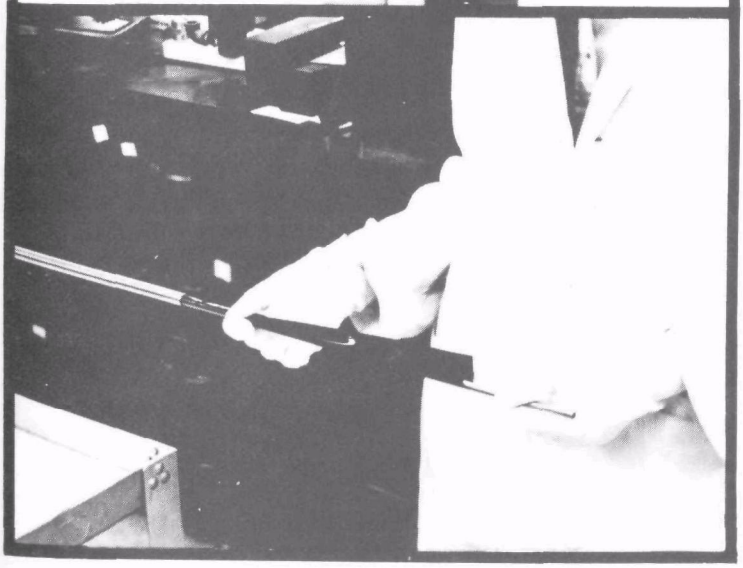

6. Continue step 5 until the entire rolled liner and mandrel are in the straw tube. This procedure works best if performed smoothly and quickly. Cap both ends of the straw tube with Swagelok fittings.

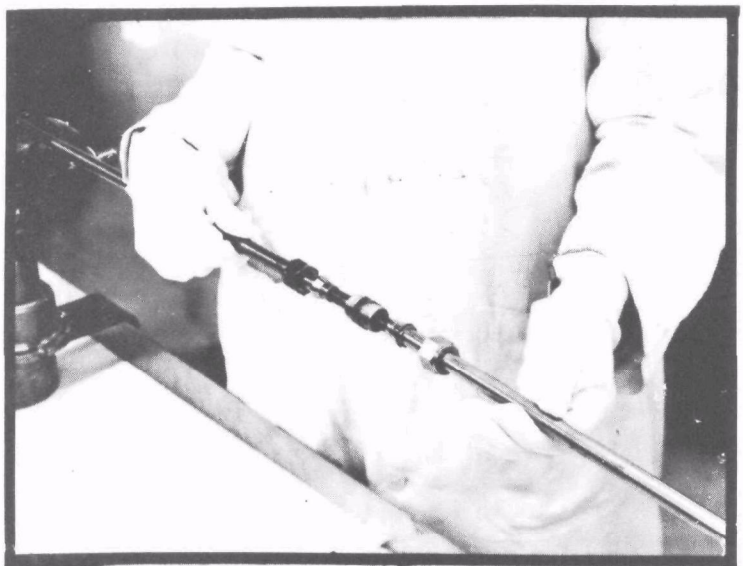

7. To transfer the liner to the probe (in the field), uncap the straw tube ends and join the tube to the probe with a Swagelok union. Alternatively, the liner can be loaded directly into the probe in the laboratory.

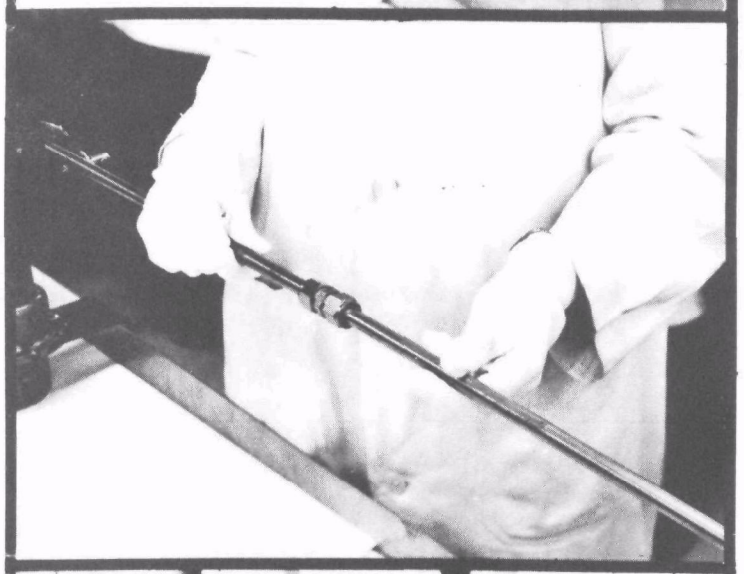

8. With the tube and probe connected, push the mandrel into the probe with another piece of stainless steel rod the same length as the mandrel or slightly longer. When the mandrel is completely inside the probe, disconnect the two.

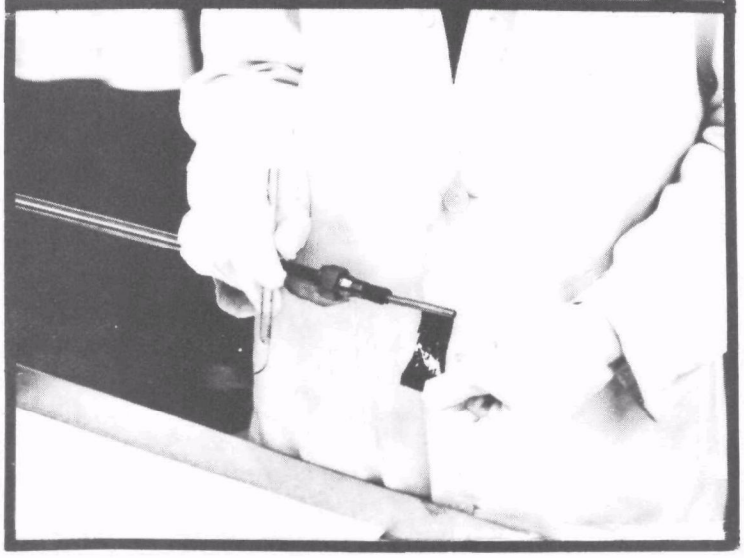

9. Push the mandrel out until it extends 7-10 cm (3-4 in.) beyond the probe end. With a clean, degreased X-acto knife, cut off the end of the liner attached to the tape. Pull out the mandrel, insert the bushing, push the bushing and liner back into the probe and attach the nozzle.

coil is rinsed with two 100 cc portions of high purity water, and these rinsings combined with the condensate collector catch. High purity concentrated nitric acid is added to each bottle to reduce the pH to between 1 and 2. The addition of the nitric acid prevents the formation of precipitates and reduces the absorption of sample trace elements on container bottle surfaces. The bottles are sealed and returned to the shipping containers.

CHAPTER IV

LIQUID AND SLURRY SAMPLING

Wastewater from plants consists of both contaminated and relatively clean effluent streams. In general, the contaminated wastewaters are those taken from processes, while clean wastewaters are those used for indirect heat exchange and general washing. The major sources of contaminated wastewaters are:

- Brines from electrolysis and crystallization
- Filter cake washings (mining operations)
- Waste acid and alkaline streams (wet scrubber equipment)
- Washing streams containing substantial amounts of suspended particulate matter (coal gasifiers).

In general, these waters are characterized by suspended solids ranging from tenths to tens of percent of the total weight.

Clean wastewaters are primarily composed of stream condensate and cooling water. Normally, these are released into the environment with little or no treatment. Due to process leaks, makeup water, or boiler blowdown, these streams can become polluted and would be sources for trace metal sampling.

The composition of liquid streams that might be sampled for their trace metal content would fit in several broad categories:

- Water
- Water-solids (slurry)
- Water-organic liquids-solids (slurry)
- Organic liquids-solids (slurry)
- Organic liquids.

The amount of nonmiscible organic liquids in most outlet streams from most plants will be low (<10 percent of total volume). For trace metal sampling, major emphasis must be placed on streams in the water and water-solids categories, along with the special category of water-organic liquid-solids (slurry). Since the water and water-organic liquid categories fit into general separative schemes at a lower level, they are not addressed directly.

4.1 CONSIDERATIONS FOR LIQUID AND SLURRY SAMPLING

The factors which must be considered in accurately sampling a fluid stream for trace materials include:

- Stream homogeneity
- Stream flow rate and variations
- Prevention of sample loss
- Sources of contamination
- Sample size.

Of these, stream homogeneity is perhaps the most important factor. Unlike stack effluent streams which are mixed fairly evenly due to higher thermal agitation and lower fluid viscosities, liquid streams tend to be more stratified and require more careful sampling. A flow-proportional, composite sampling technique is required for sampling liquid and slurry streams for trace materials. By comparison, obtaining a composite representative gaseous sample from a stack, a traverse of the pipe or duct is made. However, this is usually impractical in sampling liquid streams.

In liquid streams, a composite sample can be taken by using several differently positioned probes, a single multiported probe, or a combination of these. While either of these approaches is suitable, the single multiported sampler is usually more convenient.

In the case of slurry sampling, it is also important to avoid segregation of liquid and solid phases. This is similar to the requirement for isokinetic sampling in particulate-laden gas streams. A recent EPA internal study has evaluated 60 commercially available models of automatic sewer flow samples [9]. In this study, sampling velocity was determined to be the most critical factor in sampling sewage slurries. Two units were found to perform acceptably: Quality Control Equipment Company Model CVE and Testing Machines, Inc. Fluid Stream Sampler. Both of these units are portable and completely automated. The QCEC unit also has a built-in ice chamber for automatic refrigeration of temperature-sensitive samples. Another common practice for the preservation of liquid samples is to freeze them until they are ready for analysis. However, this practice is now being questioned for trace material analysis because of the tendency for metal ions to precipitate upon freezing. The technique should only, therefore, be used for preserving samples for bacteriological and dissolved gas analyses.

Several studies have shown that trace materials in liquid phases may be lost from a sample through adsorption on sampling line or reservoir surfaces (10, 11, 12). Borosilicate glass (Pyrex) surfaces appear to be particularly effective in removing trace heavy metals, especially under alkaline conditions. However, plastics such as polyethylene, polypropylene, and Teflon show little or no tendency to adsorb inorganic materials. It is essential, therefore, that the sampling lines and collection reservoirs used for sampling liquid streams be made of plastic, preferably Teflon, because of its superior chemical inertness toward strong acids, alkalies and other chemical reagents.

In addition to sample loss due to surface adsorption, a sample may also be contaminated by elements from those surfaces. Surface wall material can be deposited in a sample either by a chemical extraction of the wall materials by reagents in the sample or by physical abrasion or erosion of the wall by a sample. The latter case could be a significant problem for slurry systems because the abrasive nature of the sample could expose unpassivated layers of the wall to chemical interaction with the sample.

Another important factor which must be considered in sampling liquid streams for trace material constituents is the sample size requirement. Two principal requirements govern sample size. The first requirement is that the amount of sample collected must be sufficient for the testing and analysis procedures to furnish accurate and precise results. The second requirement is based on the statistical sampling error that can be tolerated. The minimum sample required for analysis varies between 1 and 1000 μg for the trace materials of interest using the proposed analysis procedures. For the lower ppm concentration levels of interest, this translates into minimum sample volumes ranging between one ml and one liter. This range of sample volumes is easily within the operating limits of presently available liquid sampling equipment and presents no special difficulties.

Determining the minimum size liquid sample that must be collected to reduce statistical sampling error to acceptable limits is considerably more difficult. To meet a goal of a combined relative sampling and analysis error of ±25 percent, the allowable error must be subdivided between sampling and analysis errors. A relative analysis error of 5 to 10 percent is common at the low ppm concentration levels. Allowing a maximum 15 percent error for analysis, the sampling error can be as high as 20 percent and meet the 25 percent overall error ($25 = \sqrt{15^2 + 20^2}$).

4.2 EQUIPMENT SURVEY AND RECOMMENDATIONS

The sampling of liquids and slurries in the categories defined above requires equipment suitable for point sampling, as well as for sampling from ponds, reservoirs, open tanks, open channel flows, and pipes which have built-in sampling ports.

For pond and tank sampling, and in preliminary or point sampling, point and depth-integrated samplers are commonly used. The Sirco Unicsoop, which is made of No. 316 stainless steel, is recommended for point sampling. The Uniscoop has a handle for collecting below-surface samples and is convenient to use. A depth-integrated sampler consists of a weighted bottle and is easily fabricated.

The recommended automatic samplers are Model CVE (Quality Control Equipment Corporation) and Model 1940 (Instruments Specialty Corporation). The schematic for the Model CVE is shown in Figure 5. All components in both units which come in contact with the sample are composed of polypropylene, polyethylene, or Tygon, and the sample never passes through any valves or pumps. Both units can perform short-term or long-term sampling at certain time intervals proportional to time or flow rate. The units also have built-in ice cabinets to preserve the samples at lower temperatures. The units offer a long-term stability without mechanical or electronic malfunctions.

While the Model CVE sampler provides composite samples directly in the field, and the Model 1940 takes sequential samples that are stored in separate bottles, both models can perform time or flow proportional sampling depending on the availability of a flow measuring device. The Model CVE was rated the best unit in a study conducted by the EPA Regional Office at Kansas City, Missouri [9]. The Model 1940 was also highly recommended in this study and is currently in use in the Los Angeles County District (250 units) and Ontario Ministry of Environments in Canada.

For pipes having built-in sampling ports, the Model L-F (Quality Control Equipment Corporation) is recommended. This sampler can be used for both liquid and slurry samplings.

The equipment discussed in this chapter is capable of handling a wide variety of process streams found in most industrial applications. For

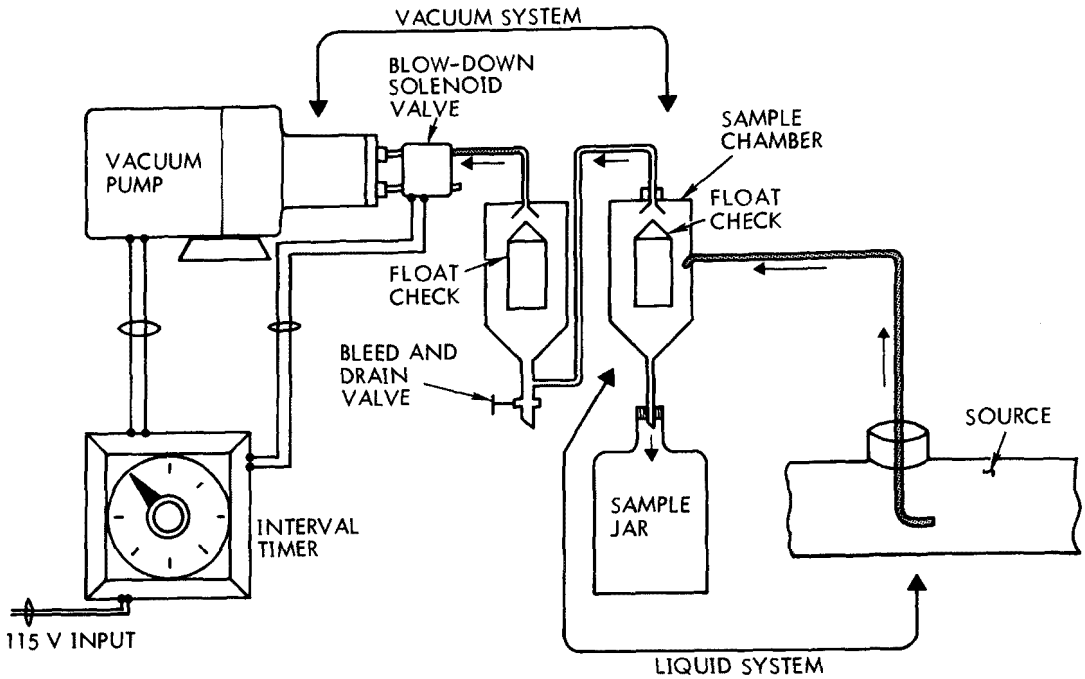

SYSTEM OPERATION

THE PATENTED VACUUM SYSTEM LIFTS LIQUID THROUGH A SUCTION LINE INTO THE SAMPLING CHAMBER. WHEN FILLED, THE CHAMBER IS AUTOMATICALLY CLOSED TO THE VACUUM. THE PUMP THEN SHUTS OFF AND THE SAMPLE IS FORCIBLY DRAWN INTO THE SAMPLE CONTAINER. A SECONDARY FLOAT CHECK PREVENTS ANY LIQUID FROM REACHING THE PUMP SHOULD THE PRIMARY SHUT-OFF PASS ANY MATERIAL. THE SUCTION LINE DRAINS BY GRAVITY BACK TO THE SOURCE. NO POCKETS OF FLUID REMAIN TO CONTAMINATE SUBSEQUENT SAMPLES. AUTOMATIC PRESSURIZED BLOW-DOWN OF SUCTION LINES AND THE ENTIRE LIQUID SYSTEM ASSURES THAT NO OLD MATERIAL REMAINS TO CONTAMINATE THE CURRENT SAMPLE. THIS CLEARS THE LINE AND PROVIDES A FRESH AIR PURGE OF THE PUMP AND THE ENTIRE SYSTEM.

Figure 5. Model CVE sampler schematic.

sampling streams having highly corrosive materials, the Teflon coating of all metal parts should be considered in order to prevent contamination of the samples and corrosion of the sampling equipment. However, for most applications, inherent durability and flexibility of the off-the-shelf samplers are adequate.

4.3 SAMPLE COLLECTION SEPARATION AND STORAGE

Prior to sample collection, the liquid sampler must be cleaned in the field to prevent any contamination. Flushing out the sampler with a liter

(quart) of dilute nitric acid (0.1 N) followed by a liter of high purity water eliminates any particles introduced during shipping and field storage. The sampler is then placed near the process stream to be sampled. This site should be free of windblown contamination. The sample probe or hose is introduced into the stream and the timer set for the proper sampling period.

Following sample collection, the various phases present in a liquid or slurry must be separated to prevent gross disruption of the trace metal content of each phase. Allowing the phases to be in contact with each other leads to a redistribution of the trace metal composition among the phases. For these reasons a preliminary field phase separation procedure is required.

The equipment necessary for separating the phases of liquid and slurry samples in the field consists of:

- Filters
- Nalgene Buchner funnel and filter flask
- Nalgene separatory funnel
- Small vacuum pump
- Acids, bases, methanol, and high purity distilled water.

The recommended filter is 0.5μ Millipore Fluoropore (Teflon). Fluoropore filters are both chemically clean and inert to most organic and corrosive solvents. Furthermore, Teflon does not have a tendency to absorb metals on its surface. If a slurry sample is found to contain a large amount of solids, pre-filtration is necessary using another Teflon filter, Millipore Mitex. This filter is available in a 10μ-pore size and is designed to act both as a membrane and depth-type filter. The larger pore size of the Mitex filter allows for a higher solid content without clogging. Pre-filtration with Mitex followed by filtration through 0.5μ Fluoropore should produce a solids-free solution. For purposes of this manual, any particle which passes through a 0.5μ membrane filter is considered in solution.

All the Nalgene equipment used in separation of the sample phases must be pre-washed to prevent contamination. A solution of 0.1 N HNO_3 (high purity) in a squeeze bottle must be used as a rinse between samples to prevent cross-contamination. Enough clean replacements must be available, should the liquids leave a film on the plasticware.

The last item required is a small vacuum pump for the Buchner funnel. Clean Tygon tubing and a spare clean filter flask can serve as a water trap to protect the pump. All this equipment must be set up in a clean area in the van or, if possible, in the plant's quality control lab. Contamination from external sources should be prevented at all times.

Figure 6 summarizes the separation and stabilization scheme for several categories of liquid and slurry samples. The following sections briefly discuss the procedures associated with each stream category shown.

4.3.1 Clear Water

After sample collection, a clear stream is divided approximately in half and placed in chemical bottles. Enough concentrated HNO_3 is added to one bottle to reduce the pH to 1. The other bottle is treated with NaOH to attain a pH of approximately 10. The addition of HNO_3 stabilizes the trace metals in solution and prevents adsorption on the container walls. The analysis of Cl^-, NO_3^-, or PO_4^{-3} is not possible if any of the respective acids are added. Sample streams containing relatively large percentages of CN^- should not be acidified or volatilization of toxic HCN will occur.

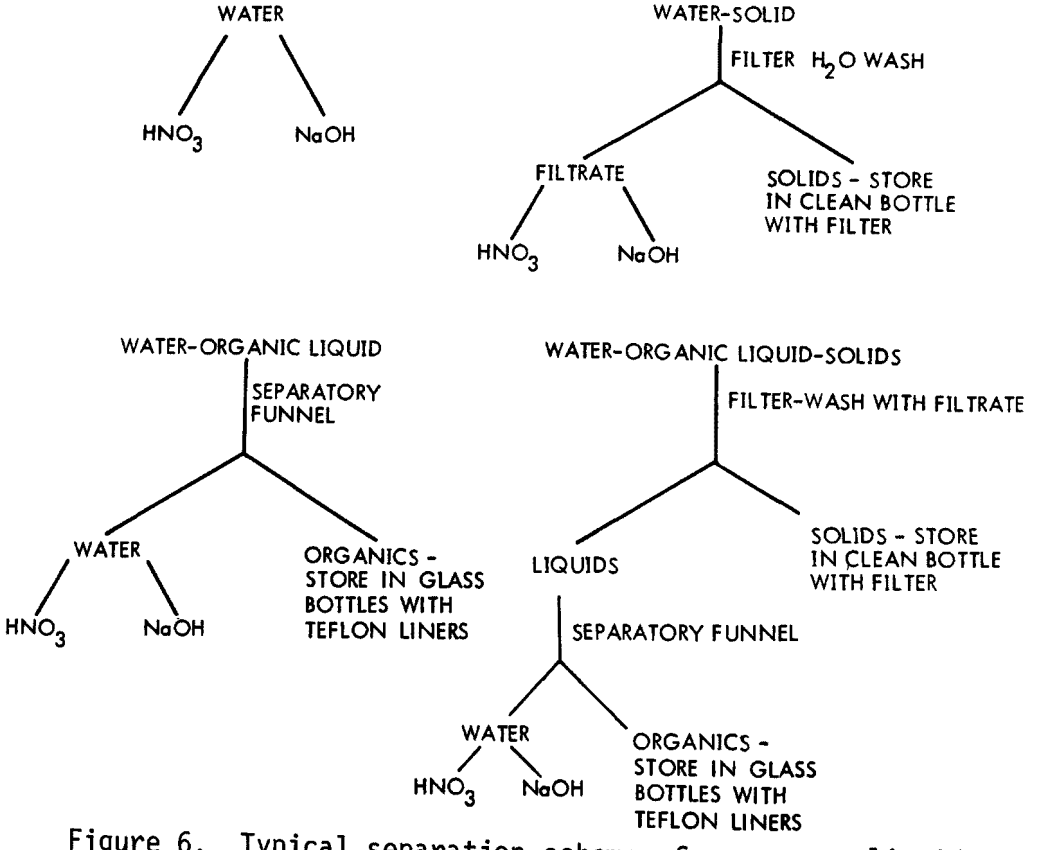

Figure 6. Typical separation schemes for process liquids.

Cyanide is a chelation agent which will keep most of the trace metals of interest in solution, thus acidification is unnecessary.

The addition of NaOH stabilizes anions such as CN^- and NO_3^-; however, it is also highly likely that precipitation or the formation of a gelatine mass of the hydroxides of metals like Fe^{+3}, Al^{+3}, and Ba^{+2} will occur. These hydroxides can be redissolved back at the lab.

4.3.2 Water-Solid Streams

For water-solid streams, the slurry is first filtered using the equipment and filters described above. Because the Teflon filters are hydrophobic, they must be moistened with a small amount of methanol just prior to filtration to avoid any pressure buildup. The filter and solids are washed with a small amount of H_2O and sucked damp dry; both are placed in a clean storage bottle. The solids are then dried (at 110^oC) and weighed back at the lab. The filtrate is treated in the same manner as the clear water stream described above, except the amount of wash water added must be recorded. All volume changes must be recorded so weight/volume percentages can be corrected to the original sample.

4.3.3 Water-Organic Streams

Clear water-organic liquid is separated by placing the collected sample in a clean Nalgene separatory funnel. The various liquid phases are allowed to separate and are then drained into separate clear bottles. The water phase is treated as described above, while the organic phase is stored in glass bottles with Teflon seals. Note: If both inorganic and organic analysis is going to be performed, then all glass separation apparatus should be used. The aqueous and solid portions, however, are still stored in polypropylene bottles.

4.3.4 Water-Organic Liquid-Solid Streams

The most complicated system is the water-organic liquid-solids stream. In this system, the solids are first filtered and washed by cycling some of the filtrate through the filter cake. The reason for this is to avoid disrupting the three-phase (ℓ-ℓ-s) equilibrium by the addition of water. After the filtrate is collected, it is placed in a separatory funnel, separated, and stabilized as above.

4.3.5 Summary

In general, there are three important requirements for proper collection and storage of liquid and slurry samples:

- Volume changes must be recorded because they affect the slurry composition data.
- Cross-contamination must be avoided through cleanliness of operations.
- All transfers should be made as quantitatively as possible.

By following the above procedures, liquid and slurry samples can be properly stabilized for shipment to the analytical lab.

CHAPTER V

SOLID SAMPLING

Solid sampling covers a broad spectrum of material sizes ranging from large lumps to powders and dusts. There is an equally diverse assortment of potential sample sites including railroad cars, large heaps, plant hoppers, conveyor belts, and process stream pipes. Obviously no one method or piece of equipment is suitable for all situations, but the advantages and disadvantages of each must be weighed in the light of individual field test conditions. The following discussion provides an overview of common solid sampling situations and summarizes the sampling approaches and alternatives available to a field test team.

5.1 SAMPLING METHODOLOGY AND EQUIPMENT SURVEY

The sampling of solids for trace elements may include the use of three manual grab sampling techniques: shovel sampling; boring techniques, which include pipe or thief sampling; and auger sampling. Mechanical samplers, both moving and stationary, can also be used to obtain solid samples. Detailed treatments of each of these sampling techniques can be found in several technical handbooks (13, 14 and 15). The chief consideration of solid sampling is the acquiring of representative samples.

Shovel sampling procedures include grab sampling, coning and quartering, and fractional shoveling. Grab sampling consists of taking small, equal portions at random or regular intervals, typically from railroad cars, large heaps, or hoppers. The method is quick and inexpensive. However, grab sampling makes no allowance for segregation of the sample by particle size and also tends to give consistently high or consistently low results depending on the person sampling. As such, grab sampling should be used for survey sampling.

Coning and quartering consists of carefully piling the material into a conical heap, with subsequent flattening of the cone into a circular cake. The cake is then marked into quadrants; two opposite quadrants are taken as the sample and the other two quadrants are discarded. The entire process is repeated until the desired sample size is obtained. In general, this

method is time-consuming and the symmetry of the intended vertical size segregation is difficult to achieve in practice.

Fractional shoveling is applicable to materials being loaded, unloaded, or moved from one place to another by shoveling. In fractional shoveling, every third, fourth, fifth, or tenth shovelful is taken as the sample. This method is inexpensive and relatively fast. If performed conscientiously, fractional shoveling can be more reliable than coning and quartering. However, its applicability is limited and errors are easily introduced by carelessness.

Pipe boring techniques represent another class of solid sampling methodology applicable to material stored in piles, silos or bins. The usual method of pipe boring is to insert the pipe into the material to be sampled at regular intervals. The method is fairly reliable provided that the pipe is long enough to reach the bottom of the material. However, it is only applicable to fine or powdered dry materials, because lumps or any stickiness will jam or plug the pipe. Small pipe borers can be used to sample sacks or cans of material. There are primarily two designs of pipe borers that give best results. One is a simple pipe that is tapered so the end first inserted is smaller in diameter than the handle end. A more sophisticated design, known as a thief, makes the sample more representative vertically. It consists of two close-fitting concentric pipes sealed at the base in a conical point. Longitudinal slots are cut along the side of each pipe. The thief is inserted with the slots turned away from each other and then, when the sampler is in position, the outer pipe is rotated, lining up the slots and allowing the inner pipe to fill the sample. For proper results with any design of pipe borer, the opening through which the sample material passes (slots or circular pipe ends) must be large relative to the maximum particle size.

Auger samplers, a form of drill, pack the sample in the helical groove of the auger and can be enclosed in a casing if the nature of the sample is such that it will spill when the auger is removed from the hole. Like the pipe borers, they are simple to use and have the further advantage of being applicable to a greater variety of materials. For example, augers work well for materials that are packed too hard for a pipe sampler to be forced in. For very packed materials, machine-driven augers are available. However, a

thief sampler would be the better choice if sample spillage is a possibility. Also, both pipe samplers and augers yield poor results if the material being sampled is poorly mixed.

Mechanical samplers require that the sample material be in motion to present it to the cutters as a thin ribbon or stream. Design considerations for feeding these samplers and catching the sample and rejected material generally necessitate the permanent installation of the sampler into the flowing sample stream. Numerous mechanical samplers have been designed; the most popular designs have been variously modified to satisfy specific applications. However, all mechanical samplers fall into two general types: those that take part of the stream all of the time (stationary samplers), and those that take all of the stream part of the time (moving samplers).

In stationary mechanical samplers, the entire sample stream is fed continuously through the device and stationary cutting edges divide out and remove specific fractions. The two best-known designs of this type are rifflers and whistle-pipes.

Rifflers take several slices of the stream by means of parallel chutes alternately placed at 90° angles to each other, thereby cutting the stream in half. Successive rifflers can be arranged in banks to cut the stream into any desired fraction. The smaller the chute width, the greater the number of increments in the sample. Therefore, the accuracy of riffler sampling increases as the ratio of chute width to particle size decreases, to the limiting condition where the chutes tend to clog. In general, chutes should be at least three times the diameter of the largest size particle to avoid clogging. Care must be taken to feed the riffler with a well-mixed, uniform sheet of material since any compositional variations due to cross-sectional segregation are multiplied by a bank of rifflers.

A whistle-pipe sampler consists of a vertical pipe with notched openings cut halfway through the pipe, each spaced 90° horizontally from the one above. Rectangular steel plates are placed in the notches at a 45° angle to the vertical so that the top edges coincide with a diameter of the pipe. Thus each notch halves the sample and, with a series of five openings, the sample obtained is 1/32 of the original volume. The same fraction with improved accuracy can be obtained by using a cutter arrangement that quarters the stream, rejecting opposite quarters, and spaces

each cutter at 45° horizontally from the one above. In either design, a hopper-shaped liner is placed above each notch to re-center the stream before it reaches the next cutter.

Both rifflers and whistle pipes have irresolvable design problems that reduce their reliability. Worn or bent cutting edges distort both the volume and the particle size distribution of the sample. The housing necessary for these samplers prevents examining them for clogged openings while in operation. Material streams whose composition varies along the transverse section are even further segregated by either of these samplers.

Moving samplers consist of cutters that move through the free-falling sample stream taking all the stream for the duration of time they are moving through it. There are two ways of effecting this. One is with rotating or oscillating samplers whose cutters are set on the radii of an arc, and the other is with straight-line samplers whose cutting edges are set parallel to each other and perpendicular to the line of their path.

Among the well-known designs of rotating arc-path samplers are Vezins, Synders, and Chas. Synders. They all consist generally of scoops with vertical sides, set on an axis parallel to the stream flow. The best oscillating samplers are known as Bruntons. The scoop travels back and forth across the stream in a pendulum-type motion. The travel path must be sufficiently long to minimize the bias created by taking more sample from the sides of the stream than from the middle. All the arc-path samplers have the advantage over stationary samplers in that they take an accurate cut, are simply constructed, and are accessible for observation while in operation. However, damp sample material may tend to clog the scoops and care must be taken to maintain the cutting edges in good condition and to keep them completely radial.

The straight-line samplers are generally considered to be the most reliable and accurate of all available types of samplers. The design of their cutters is such that the sampling scoop spends an equal amount of time in every portion of the stream. Generally the travel is at right angles to the stream. Though they provide increased reliability, these samplers require more maintenance and attention because of their increased mechanical complexity.

5.2 STATISTICAL DETERMINATION OF SAMPLE SIZE

Whatever the sampling method, the amount of sample that should be taken is a function of the desired accuracy, the material homogeneity, and the reliability of the sampling method. A statistical means of determining the sample size needed to yield results having a prescribed level of precision based on the above factors has been theoretically derived by Welcher[16], 1963.

The general form of this equation is:

$$n = \left(\frac{t\sigma}{E}\right)^2$$

where:

n = number of units to be taken for sample

σ = advance estimate of the standard deviation

E = maximum allowable difference between the result to be obtained from the sample and the result of testing the entire bulk of material

t = a factor corresponding to the acceptable risk of exceeding E

The terms "E" and "t" are relatively easy to assign as they are the parameters of the desired precision. The t is a statistical factor expressing the probability that, by chance, E will be exceeded. The following tabulation lists several approximate probability values and the corresponding values of t:

t	Probability that E will be exceeded
3	3 in 1000
2.58	1 in 100
2	45 in 1000
1.96	1 in 20
1.64	1 in 10

Generally, a factor of 3 is used to minimize the possibility of the sampling error exceeding E. Any degree of precision can be chosen for E, although the required sample size increases as the square of the entire

precision term. E can be expressed as a percentage or in units of measurement; however, σ must be expressed in the same way so that the resultant n is unitless.

The result is a value of n units of sample. These units (e.g., shovelfuls, pounds, etc.) must be the same as those used to determine the standard deviation, σ, in order to relate the two sides of the equation. The value of σ can be determined in one of two ways. Either a preliminary test must be run on at least 10 units of sample to calculate the standard deviation between units; or σ can be estimated, with the result that a somewhat larger number of units is taken for the sample than the estimated number necessary, and the sample size is readjusted after the actual σ has been determined.

The following example illustrates the use of this statistical equation. Using some type of pipe sampler, a flowing stream of pulverized coal is being sampled for percent ash. A preliminary test showed the average deviation between samples taken by the pipe sampler to be 25 percent, and a maximum sampling error of 10 percent is required. Then:

$$n = \left[\frac{(3)\ (25)}{10}\right]^2 = (7.5)^2 = 56.25 \cong 56$$

and 57 samples must be taken to determine percent ash in the coal with a maximum error of 10 percent.

5.3 SAMPLE COLLECTION AND STORAGE

It is always preferable to sample a moving stream either in pipes or from conveyor belts, particularly if there is a large particle size range in the material. Stored containers or heaped beds of material tend to settle, creating segregation of particles according to size and density, and it is difficult to compensate for this bias in the sampling. Furthermore, large masses of stored material are extremely difficult to handle. The interior portions are relatively inaccessible and the amount of time and space needed to move the material enough to take a representative sample can quickly become prohibitive. However, such situations can generally be avoided by a good sampling test plan.

Typically, in a process test for trace elements, the solid materials of interest are the feed materials and the residues from particulate scrubbers such as baghouses, high energy Venturis, and electrostatic precipitators. Raw feed stock as it passes through the process stream may pick up other materials as contaminants and, therefore, differ greatly in composition from what is finally being fed to the process. Consequently, samples should be taken at the last possible site before the stream is fed into the process. This means that sampling will generally be conducted from a feed hopper, if accessible, or from whatever pipes or conveyors feed the material to the process. Similarly, scrubber residues can be sampled from whatever collection hopper the device has or from pipes going to the hopper. Extra handling steps only increase the chances of the sample becoming contaminated.

5.4 OTHER CONSIDERATIONS

As part of their own process control, many plants may have some type of mechanical sampler already installed into their process stream. Whenever possible, these devices should be used for taking samples. They are reliable, take representative samples, and are fast and easy to use. Before being used, however, the samplers' operation and cutting edges should be checked to ensure accuracy. If reliable automatic samplers are an integrated part of the plant and are available, no sampling equipment will be needed by the field test personnel.

In cases where it is decided to take samples from moving conveyor belts, the standard procedure is to stop the conveyor at regular intervals (e.g., every 10 to 15 minutes) and shovel off a section of the material. This is continued until the desired sample size is obtained. Flat-nosed shovels with straight perpendicular sides are best for these sampling purposes.

Another alternative is to sample process streams as they move through pipes if there are appropriate ports. A variety of pipe samplers are commercially available. The type most suitable for trace element sampling is the pneumatic sampler, which eliminates the screw type or scraping action of other types of samplers which grind the sample and abrade the sampler, thereby introducing considerable contamination.

The best pneumatic sampler currently available is the Model RTA of Quality Control Equipment Corporation. All parts in contact with the

sample can be Teflon or nylon lined, which is a major advantage. It can be used to sample solids with a particle size less than 0.64 cm (1/4 in. in diameter), as well as slurries and liquids from pipes fitted with at least 2-inch diameter sampling ports. Figure 7 is a schematic for the Model RTA sampler.

Samples collected by any of the techniques described in this chapter must be stored in pre-washed and dried plastic bottles or plastic lined drums. If plant personnel are to take the sample, they should be provided with the appropriate bottles or containers.

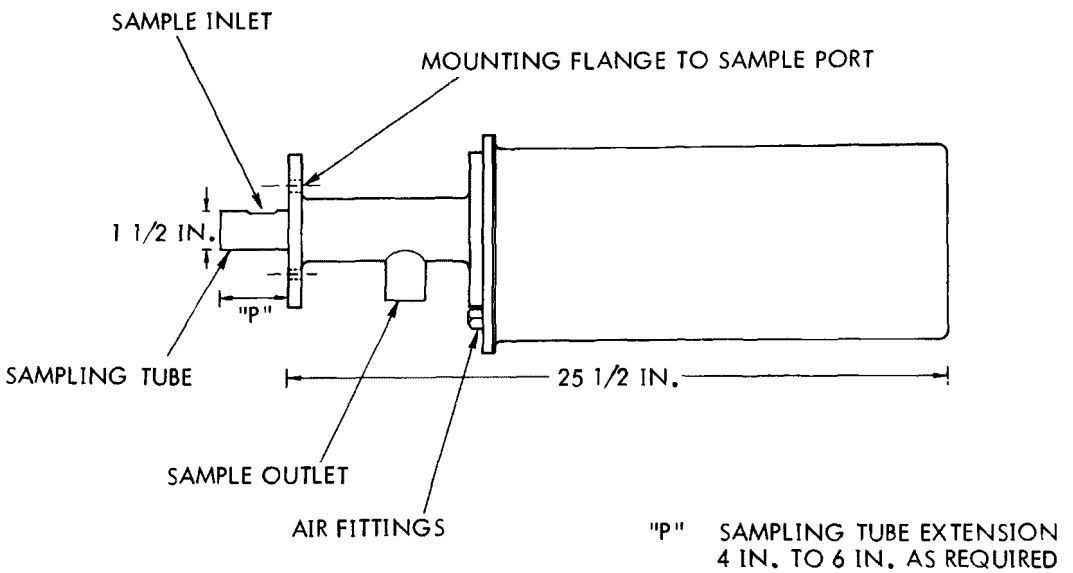

SYSTEM OPERATION

UPON COMMAND FROM THE VARIABLE INTERVAL CONTROL, THE SAMPLING TUBE IS EXTENDED INTO THE CONVEYING LINE, WHERE IT DWELLS FOR A SHORT ADJUSTABLE PERIOD. THE SAMPLE IS TRAPPED IN A SUITABLY SIZED CAVITY IN THE SAMPLING TUBE, WHICH IS THEN AUTOMATICALLY RETRACTED AND THE SAMPLE EJECTED BY A BLAST OF AIR. THE PRESSURE AND DURATION OF THE AIR BLAST ARE FULLY ADJUSTABLE TO MEET VARYING CONDITIONS. SAMPLE IS COMPLETELY DISCHARGED. NO CARRY-OVER. THE CONTROL PANEL IS A SEPARATE UNIT.

Figure 7. Pneumatic line sampler schematic.

CHAPTER VI

ANALYTICAL TEST PLANNING

The success or failure of a field sampling test depends not only on the correct field application of sampling and sample preservation techniques but also on accurate and cost-effective sample preparation and analytical procedures in the laboratory. For the analytical data to be relevant, several factors must be considered. The laboratory work areas must be carefully cleaned and prepared to prevent contamination. The analytical work must be planned and scheduled to fit the objectives of the field test. Data review points at which to evaluate the fit of analytical procedures to the test objectives must be predetermined. The procedures themselves must be checked for precision and accuracy and calibration curves prepared.

The following paragraphs contain appropriate procedures and checklists that can be followed in assembling a viable analytical test plan. A typical test data sheet (Table 7) and planning logic flowchart (Figure 8) are supplied. Prior to beginning any work on the samples, the analyst must be aware of the following:

- List of samples taken and any special notations from field test crew
- Test objectives
- Elements to be analyzed, expected concentration ranges if known, and degree of accuracy and precision needed
- Brief description of process sampled so that an estimate of expected species can be made.

With the above information the analyst can begin to design an analytical test plan.

6.1 LABORATORY PREPARATION

Samples received for trace element analysis must be stored and handled in a clean work area. The laboratory area should be cleaned prior to opening sample boxes by 1) removing any extraneous samples or equipment; 2) washing the bench-tops with soap (Alconox) and water; and 3) and covering them with clean paper mats. The exterior surface of each sample container should be wiped with a clean towel moistened with deionized water. After

TABLE 7. SAMPLE OF ANALYTICAL TEST CHECKLIST

Sample Identification	Date Rec'vd	Prelim. Wt./Vol.	Physical Examination	Sample Work-Up					
				Drying	Grinding	Blending	Oxygen Plasma Ashing	Dissolution	Pre-Concentration
(Cross reference to sample number)			(I)					(II)	(III)

NOTES:
1. Insert dates at completion of each increment and the analyst's initials.
2. Describe any anomalous behavior, i.e., formation of precipitates, discoloration, f effervescence, etc.
3. (N) denotes data and procedure review points.

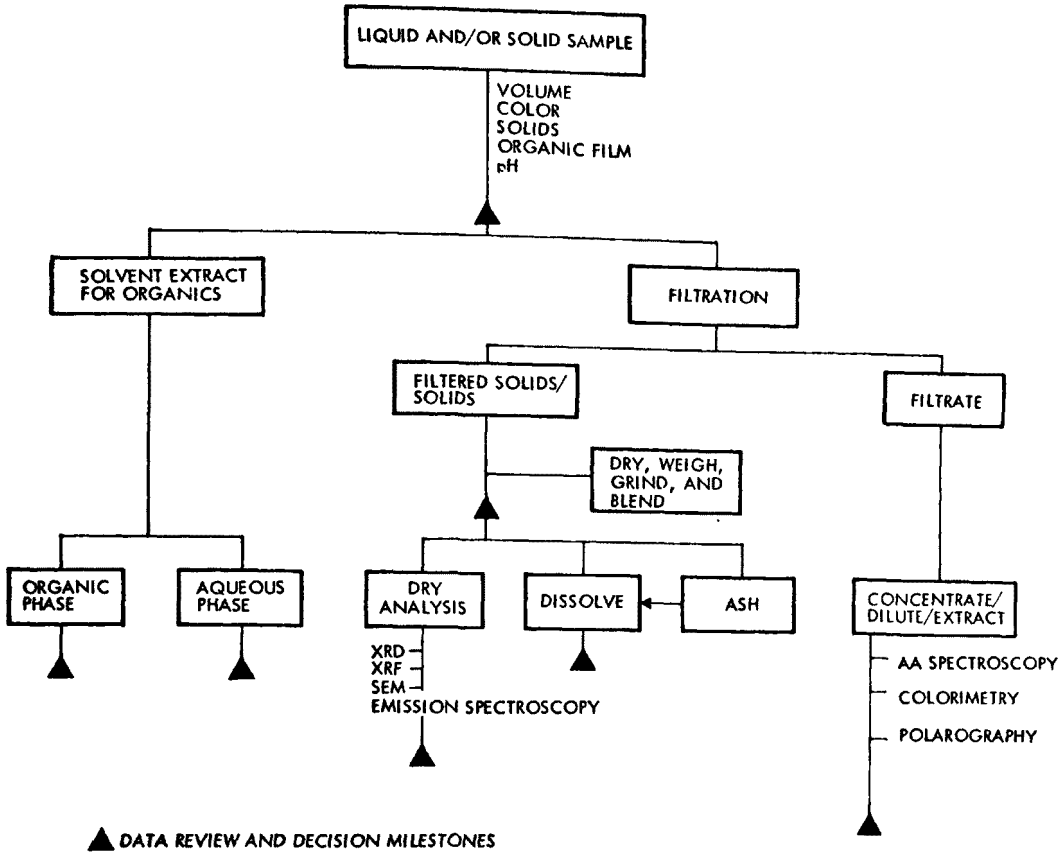

Figure 8. Planning logic flow chart

samples have been removed from the boxes, wiped clean and stored in series, they should be logged in on a master list (see Table 7). By comparing this list with a list supplied by the field sampling team leader, it becomes apparent whether any samples have been lost or misplaced.

Additional procedures for preparing and cleaning apparatus, instruments, and reagents for the analytical work are provided in Chapter VII.

6.2 DATA REVIEW POINTS

A preliminary examination of the samples is the first step. All particulate samples are weighed, all liquid volumes measured, and the appearance of any precipitates, organic films or scums, or solution discolorations are indicated.

The first data review point is at the conclusion of this task. At this point the analyst must decide on the following: (1) whether an aliquot of the solid samples can be taken or whether the entire sample must be used,

and (2) for liquid samples, whether they need to be filtered and the residue analyzed and, if so, by what means. A decision also must be made, based on volume collected and information desired, whether to combine solutions and/or perform pre-concentration procedures. All decisions must be made with the overall test objectives in mind. The drying, grinding, blending, and ashing steps discussed in Chapter VII can then be implemented. After the preliminary sample preparation has been completed, decisions about the most appropriate dissolution procedure to be followed and whether or not further concentration steps are warranted must be made. When all the samples are prepared and in solution, they are ready for analysis.

At the conclusion of the chemical analysis (described in Chapter VIII), the procedures for the analytical data must be reviewed. This data review should include a comparison to standards, examination of standard addition curves, and comparison of duplicates (if run). If discrepancies exist, every effort must be made to identify the source of the problem. Appropriate changes in the procedures for sample handling, preparation, dissolution, and/or analysis must be incorporated into the analytical test plan prior to rerunning the analytical tests.

6.3 PRECISION AND ACCURACY

Due to the diversity of matrices and the wide ranges of trace element concentration expected from field samples, it is imperative that the analyst use all means available to determine the accuracy and precision of the analytical technique employed for each element determined. The analytical procedures proposed in this manual were selected to give at least ±15 percent accuracy level at a concentration of 1 ppm. However, the accuracy will improve significantly for any of the analyses with an increase in concentration.

A clear distinction should be made between the terms "precision" and "accuracy" when applied to methods of analysis. Precision refers to the reproducibility of a method when repeated on a homogeneous sample under controlled conditions, regardless of whether or not the observed values are widely displaced from the true value as a result of systematic or constant errors present throughout the measurements. Precision can be expressed by the standard deviation. Accuracy refers to the agreement between the amount

of a component measured by the test method and the amount actually present. Relative error expresses the difference between the measured and the actual amounts, as a percentage of the actual amount. A method may have very high precision but recover only a part of the element being determined; or an analysis, although precise, may be in error because of poorly standardized solutions, inaccurate dilution techniques, inaccurate balance weights, or improperly calibrated equipment.

There are two general techniques normally used for evaluating the accuracy of analytical procedures. For coal-fired power plants, certified standards which closely match sample matrix, such as NBS 1632 and 1633 trace elements in coal and fly ash, respectively, should be used whenever available. When NBS standards are not available, the recommended procedure is to use the standard addition technique. This entails the addition to the sample aliquots of known concentrations of the element under analysis. These values are then plotted and the calibration curve extrapolated through the abscissa to the negative ordinate. The value of the negative ordinate is now an accurate estimation of the elemental concentration. When this value is compared with concentrations generated using pure elemental standards, the degree of chemical interference can be ascertained. The doped samples and standards should be run in parallel in order to compare the two for accuracy.

6.4 CALIBRATION

The selection of a calibration procedure depends on the degree of accuracy required, which in turn depends on the degree and types of solution matrix interferences present. The following sections present three techniques which are used primarily for AAS analysis. <u>However, when unknown solutions are encountered requiring ancillary techniques, the method of standard additions should be used to ascertain the magnitude of any interferences</u>.

6.4.1 <u>Factor Method</u>

This method is the most rapid of the three but is inaccurate for certain elements due to interelement interference. The method involves the analysis of a standard along with the unknown sample. The factor obtained by dividing the standard concentration by its absorbance when multiplied by

the absorbance of the unknown will give its concentration. The standard must have approximately the same concentration as the unknown. This method exhibits its greatest advantage where a large number of samples containing similar concentrations are to be determined and where extreme accuracy is not necessary.

6.4.2 Short Curve Method

The Short Curve Method is more accurate but requires slightly more time than the Factor Method. This method involves the running of two standards, one slightly higher and one slightly lower than the unknown. The absorbances of the standards are plotted against their concentrations, and the concentrations of the unknowns are read from the curve. This method, like the Factor Method, is ideally suited for running a large number of routine samples containing similar concentrations where the ultimate in accuracy is not required.

6.4.3 Additions Method (Recommended)

This is the most accurate and precise of the three methods. It incorporates the advantage of the short-curve method and also eliminates interelement interference. The method involves placing three identical aliquots of the sample in volumetric flasks. None of the standard solution is placed in the first flask. A quantity of standard equal to the approximate level expected is placed in the second flask. A quantity of standard approximately equal to twice that amount is placed in the third flask. All three flasks are diluted to the mark with water and their absorbances determined. The absorbances are then plotted against concentration. This method is applicable to special analyses where maximum accuracy is necessary and analytical time is not important.

CHAPTER VII

LABORATORY AND SAMPLE PREPARATION

In determining the trace elements in control process streams, several different types of samples must be collected, handled and manipulated. These sample types are: particulate matter on filters, particulate matter on liners, impinger solutions, bulk solids, liquids, and slurries. This chapter presents the general procedures for preparing each of these samples for trace element analysis, including the preparation of labware.

7.1 LABWARE PREPARATION

All labware which will come in contact with samples for trace element analysis must be specially cleaned to prevent contamination and avoid material losses. The procedures to be used are as follows:

- Remove all old labels and container/flask markings using acetone or dry abrasive cleansers.

- Perform a preliminary but thorough wash of all labware. A 2:1 mixture of Alconox or abrasive cleanser is satisfactory. All detergent should be rinsed off with tap water. Pipets and volumetric flasks should be rinsed thoroughly.

- After a thorough scrubbing and rinsing, thoroughly rinse each piece of labware in the specified acid wash (see below). (CAUTION: All acid rinsing should be performed in a hooded sink while wearing protective eyeware.)

  - Aqua Regia (3:1 HCl-HNO_3) acid cleaning solution is used on all labware used in Hg analysis.

  - H_2SO_4-HNO_3 in 1:1 ratio is used on all remaining glassware, except volumetric flasks.

  - HNO_3 (20%) solution in high purity water is used for all plastic labware.

  - H_2SO_4 Conc. warm (60°C or 140°F) is used for rinsing glass volumetric flasks.

  - Chromic Acid (100 g $K_2Cr_2O_7$ per 3.5ℓ conc. H_2SO_4) is used for cleaning pipets. A 24-hour soak time is required.

    Note: All acid cleaning solutions except aqua regia are reusable.

- After acid rinsing, the labware is rinsed once with tap water and immediately flushed three times with high purity water.

- Following the final high purity water rinse, the labware is air dried and stored ready for use. The following storing procedures are recommended:

  - Pipets should be allowed to drain and dry in a vertical position. Store in a drawer.

  - Open-mouth glassware should be turned upside down on rack and allowed to dry in a quiet area free from contaminating drafts from windows and hoods.

  - One to 5 ml high purity water should be poured into storage bottles and volumetric flasks, the tops replaced, and then the container inverted several times to see that the water flows smoothly without beading. Allow the water to remain during storing. If beading occurs the container is not clean. Repeat the above procedures.

  - Store all labware in clean, closed cabinets or drawers.

Contamination and loss of samples for trace element analysis are greatly reduced if the above procedures are carefully followed.

7.2 PARTICULATE AND IMPINGER SOLUTION SAMPLE PREPARATION

The sampling and analysis system described here is designed to give an accurate estimate of the trace element composition of a sampled gas stream. To achieve this goal, the grain loading dry volume of the samples must be determined. To calculate the grain loading and dry volume, the total weight of particulate matter collected and the volume of moisture condensed from the gas stream are needed.

The following sections present details of procedures for the preparation of particulates and impinger solution samples for analysis. A general sample handling flow sheet which provides an overview of the analyses to be performed was presented in Figure 8 (Chapter VI).

Various impurities present in water and reagents used in trace analysis become serious sources of contamination, because reagents are used in relatively large quantities compared with the sample itself. Commercially available high purity reagents, such as J. T. Baker Ultrex Brand, should be used whenever available. If high purity reagents are not available, the

purification methods listed in Morrison[17] should be used to purify (high purity) needed reagents. In all cases distilled deionized water should be used to make up the solutions.

7.2.1 Probe Liner Sample

Remove each Kapton liner from the probe using plastic tweezers to first pull it out far enough to get a firm grip by hand. Using plastic polyethylene disposable gloves, roll the liner gently as it is being removed. Place the liner in a pre-tared bottle for weighing back at the lab. To remove particulate matter, first cut the liner into smaller, more easily handled sections and rinse each one with Freon PCA (DuPont de Nemours Co., Freon Products Division, Palo Alto, Ca.) into a pre-cleaned, pre-tared 250 ml beaker. If a high portion of organic material is present, then reagent grade acetone may be used to remove the particulate from the liner. Determine the particulate weight after the Freon or acetone are evaporated on a steam bath and the samples have been desiccated for 12 hours. Repeat the same procedure for a Kapton liner returned unused from the field. The unused liner will be a blank in the analysis scheme.

7.2.2 Cyclone Sample

There may be two cyclone samples, a dry particulate sample and a Freon PCA rinse sample. Desiccate the powder for 12 hours prior to weighing. Evaporate the Freon or acetone rinse samples to dryness on a steam bath, then cool them in a desiccator (12 hours), and weigh. Retain all samples in their respective beakers.

7.2.3 Filter Sample

Particulate matter collected on filters is desiccated for 12 hours and then weighed. The particulate matter from the liners, cyclone, cyclone wash, and particulates on the filter are collected together on the filter pad after they have been individually weighed. The total collected sample weight, if the field sampling parameters have been adjusted correctly, should be between 0.1 and 2 g. Due to the filter housing design of the HVSS, the collected particulate matter is not evenly distributed across the surface of the filter. Thus, the filter cannot be divided and must be taken as a whole for analysis.

The composite particulate samples on the filter are placed in a large petri dish and oxygen plasma ashed for 4 hours. The samples are then removed, transferred to pre-cleaned, covered 250 ml beakers, and digested for 2 hours in 40 ml constant boiling aqua regia solution (8 ml 19% HCL + 32 ml 20% HNO_3). The solutions are filtered through No. 41 Whatman filter paper into 100 ml Nalgene volumetrics. If appreciable residue remains, it can be recombined with the original filtrates by ashing at 550°C (1022°F) and fusing with a small amount of Na_2CO_3 (∿10 parts Na_2CO_3 to 1 part residue), followed by redissolution with 1:1 HCl. These solutions can now be analyzed.

7.2.4 Impinger Solution

Using a Nalgene graduated cylinder, measure the volumes of each of the impinger solutions and then return them to the original containers. It is best to start with the last impinger solution in the train and work forward to the pre-cooler trap where the elemental concentration is the highest. The graduated cylinder used to measure the volume of the solutions should be rinsed between each solution measurement and cleaned thoroughly with high purity HNO_3 solution between one series of solutions.

7.3 PREPARATION OF SOLID SAMPLES

Generalized procedures to be used for the preparation and dissolution of solid samples include grinding, sieving, drying, and dissolution. The dissolution procedures also include an oxygen plasma pretreatment to decompose and remove organic material without the loss of volatile trace elements whenever necessary. The final step is sample dissolution by addition of the appropriate acids and fluxes to solubilize the sample for subsequent analysis.

Solid samples received at the laboratory for trace element analysis will range from large pieces of ore and coal to finely divided powders, fly ash samples collected on filter pads, and filter cakes collected from slurry sampling. Coal samples will require reduction to a workable mesh size (e.g., 60 mesh) prior to drying and dissolution. Samples collected from bag houses, electrostatic precipitators, and the filter cake from slurry sampling should not require reduction.

7.3.1 Grinding

Coal samples received at the laboratory typically fall into two distinct particle size groupings. "As received" coal is predominately 0.6 cm (1/4 in.) in diameter. This coal may also contain a great deal of moisture which will necessitate pre-drying at 50°C (122°F) overnight prior to grinding. "As fired" coal is already ground to 100 mesh. The only further treatment needed for this coal is drying.

To both ensure the homogeneity of the sample and expedite the decomposition of the coal, the coal should be ground to a minimum of 100 mesh. Place coal in a clean, one-quart (1.1-liter) ball mill. Add enough ceramic balls to the mill until the mill is three-quarters full. Place the mill on the rollers and allow enough grinding time to reach the required mesh size. Two hours is usually sufficient time but this may vary depending on the type of coal used. Next, remove the mill from the rollers. Assemble 14- and 100-mesh nylon screens and place a retaining pan on top of each other. (In all instances, use nylon screens to minimize contaminating the sample with small metal particles.) Empty the ball mill onto the large mesh screen, to separate the ceramic balls from the sample. Shake to loosen any sample that may adhere to the balls. Remove the 14-mesh screen and return the balls to the mill. Place a top on the 100-mesh screen and place both the screen and the pan on a shaker, or shake by hand, to sieve the coal through the 100-mesh screen. After shaking for a short time (10-20 minutes), remove the top and observe for any particles that are too large to go through the screen. If present, either regrind or use an agate mortar and pestle to break up these particles. Repeat till 100 mesh is attained.

To clean the ball mill, replace the used balls in the mill and add enough acetone to just cover the balls. Place the mill on the rollers for 10 minutes and then remove and empty the contents onto a large 14-mesh screen and pan. Rinse the balls and mill with fresh acetone and let the balls air dry; wipe the inside of the mill with paper towels to remove any residue that may adhere to the side walls. Rinse the mesh screens with fresh acetone until all coal is removed. Discard the acetone in an approved waste receptacle for flammable solvents.

7.3.2 Drying

Once the coal samples have been ground to the required 100-mesh size, spread them evenly in large petri dishes and dry them overnight at 50°C (122°F).[18] Coal powder samples collected from bag houses, electrostatic precipitators, and filter cakes can be dried by spreading evenly in large petri dishes and drying at 105°C (221°F) for 3 hours.

7.3.3 Ashing

Decomposition of the organic material in collected solid samples is a necessary prerequisite to trace element analysis. This decomposition should be performed using a low temperature oxygen plasma asher (International Plasma Corporation, Model 1001B or equivalent) to minimize the loss of trace elements through volatilization. The procedure is as follows: Weigh duplicate samples in acid cleaned petri dish covers. Place the petri dish and contents into the plasma asher and begin the ashing cycle. Approximately once every 4 hours, open the console and stir the coal sample to expose fresh surface. Continue ashing 2 to 3 days or until no black particles remain.

7.4 DISSOLUTION

The dissolution of the sample is the last critical step prior to analysis. The dissolution procedure must completely solubilize all the elements of interest under conditions favorable to the retention of the more volatile species. The following procedures, adapted from the literature and modified slightly, have been proven effective for coal ash, fly ash, electrostatic precipitator, bag house, and filter cake samples.

To dissolve the collected solid sample, transfer 0.5 g of the powder material to the 24 ml Teflon acid digestion cups of a combustion bomb (Parr Instrument Co. Model 4745 or equivalent) by tapping the edges of the petri dishes and allowing the ash to flow through a wide tip funnel into the digestion bombs. Tapping the dish first will allow a minimum of ash to escape into the room atmosphere. Once the bulk of the ash has been removed from the dish, transfer the remaining fine particles of material by repeated distilled water washings. To minimize the final volume, these washings should be kept as small as possible. Next, add 6 ml ultra pure concentrated HNO_3 (70 percent w/w) and 2.5 ml ultra pure concentrated HF

7.3.1 Grinding

Coal samples received at the laboratory typically fall into two distinct particle size groupings. "As received" coal is predominately 0.6 cm (1/4 in.) in diameter. This coal may also contain a great deal of moisture which will necessitate pre-drying at 50°C (122°F) overnight prior to grinding. "As fired" coal is already ground to 100 mesh. The only further treatment needed for this coal is drying.

To both ensure the homogeneity of the sample and expedite the decomposition of the coal, the coal should be ground to a minimum of 100 mesh. Place coal in a clean, one-quart (1.1-liter) ball mill. Add enough ceramic balls to the mill until the mill is three-quarters full. Place the mill on the rollers and allow enough grinding time to reach the required mesh size. Two hours is usually sufficient time but this may vary depending on the type of coal used. Next, remove the mill from the rollers. Assemble 14- and 100-mesh nylon screens and place a retaining pan on top of each other. (In all instances, use nylon screens to minimize contaminating the sample with small metal particles.) Empty the ball mill onto the large mesh screen, to separate the ceramic balls from the sample. Shake to loosen any sample that may adhere to the balls. Remove the 14-mesh screen and return the balls to the mill. Place a top on the 100-mesh screen and place both the screen and the pan on a shaker, or shake by hand, to sieve the coal through the 100-mesh screen. After shaking for a short time (10-20 minutes), remove the top and observe for any particles that are too large to go through the screen. If present, either regrind or use an agate mortar and pestle to break up these particles. Repeat till 100 mesh is attained.

To clean the ball mill, replace the used balls in the mill and add enough acetone to just cover the balls. Place the mill on the rollers for 10 minutes and then remove and empty the contents onto a large 14-mesh screen and pan. Rinse the balls and mill with fresh acetone and let the balls air dry; wipe the inside of the mill with paper towels to remove any residue that may adhere to the side walls. Rinse the mesh screens with fresh acetone until all coal is removed. Discard the acetone in an approved waste receptacle for flammable solvents.

7.3.2 Drying

Once the coal samples have been ground to the required 100-mesh size, spread them evenly in large petri dishes and dry them overnight at 50°C (122°F).[18] Coal powder samples collected from bag houses, electrostatic precipitators, and filter cakes can be dried by spreading evenly in large petri dishes and drying at 105°C (221°F) for 3 hours.

7.3.3 Ashing

Decomposition of the organic material in collected solid samples is a necessary prerequisite to trace element analysis. This decomposition should be performed using a low temperature oxygen plasma asher (International Plasma Corporation, Model 1001B or equivalent) to minimize the loss of trace elements through volatilization. The procedure is as follows: Weigh duplicate samples in acid cleaned petri dish covers. Place the petri dish and contents into the plasma asher and begin the ashing cycle. Approximately once every 4 hours, open the console and stir the coal sample to expose fresh surface. Continue ashing 2 to 3 days or until no black particles remain.

7.4 DISSOLUTION

The dissolution of the sample is the last critical step prior to analysis. The dissolution procedure must completely solubilize all the elements of interest under conditions favorable to the retention of the more volatile species. The following procedures, adapted from the literature and modified slightly, have been proven effective for coal ash, fly ash, electrostatic precipitator, bag house, and filter cake samples.

To dissolve the collected solid sample, transfer 0.5 g of the powder material to the 24 ml Teflon acid digestion cups of a combustion bomb (Parr Instrument Co. Model 4745 or equivalent) by tapping the edges of the petri dishes and allowing the ash to flow through a wide tip funnel into the digestion bombs. Tapping the dish first will allow a minimum of ash to escape into the room atmosphere. Once the bulk of the ash has been removed from the dish, transfer the remaining fine particles of material by repeated distilled water washings. To minimize the final volume, these washings should be kept as small as possible. Next, add 6 ml ultra pure concentrated HNO_3 (70 percent w/w) and 2.5 ml ultra pure concentrated HF

(52 percent w/w) to the digestion cup. (Caution: HF attacks glass so polyethylene pipets or graduated cylinders must be used.) Place the solution on an asbestos covered hot plate at 140 ±10°C (284 ±32°F) and evaporate without boiling until the final volume is 50% of the original. Then, place the sample cup in the bomb and heat the bomb in an oven at 130 ±5°C (266 ±16°F) for a minimum of four hours.

Remove the sample from the oven and cool. After cooling, filter the solutions through Whatman No. 41 filter paper into Nalgene polypropylene volumetric flasks using a polypropylene funnel. Rinse with a small amount of distilled water. With a small clean rubber policeman, scrape the Teflon inner liner to remove any adhering ash and rinse into filter paper. When filtering is complete, cap the volumetric flasks and transfer the filter paper to platinum crucibles. Ignite the filter paper in a muffle furnace at 800 ±5°C (1472 ±16°F) until no filter paper ash remains. Remove from oven, allow to cool, then add two small scoops of ultra pure Na_2CO_3 so that the ratio of Na_2CO_3 to residue is ∿10/1. Fuse the ash and Na_2CO_3 over a burner flame until the crucible is cherry red and the fusion components are in a molten state. Maintain this condition for 1 or 2 minutes or until complete fusion has taken place.

Remove the fusion cake from the flame and allow to cool, then dissolve using a 1:1 v/v HCl/water solution. Filter into the original volumetric flask and repeat the washing with the 50 percent HCl until the cake is completely dissolved. Wash the filter paper with the same acid solution and dilute to final 100 ml volume with distilled water. The solid sample is now in solution and ready for trace element analysis.

CHAPTER VIII

ANALYTICAL PROCEDURES

This chapter presents the recommended procedures for the trace element analysis of all collected samples. These procedures are presently limited to atomic absorption spectroscopy and other ancillary techniques such as fluorometric, turbidimetric and specific ion electrode procedures. Table 8 lists general analytical methods which are presented in three standard references[19, 20, and 21] on elemental analysis. However, since these methods do not completely meet all the requirements (e.g., sensitivity, accuracy and specificity) of trace material analysis, additional references were consulted in order to develop the recommended procedures presented below. These supplementary procedures, the applicable elements, and the references consulted are tabulated in Table 9.

The recommended procedures presented in the following sections are divided into two categories. The first category pertains to all elements that are to be analyzed by direct Atomic Absorption Spectroscopy (AAS) and includes Ba, Be, Cd, Ca, Cr, Cu, Pb, Mn, Hg, Ni, Sr, V, and Zn. The second group includes the procedures applicable for the analysis of the remaining elements and radicals. These include As, Se, SO_4^{-2}, F^-, B, Sb, NO_3^-, PO_4^{-3}, CN^-, and Cl^-. The analyses for these remaining elements and radicals are primarily performed using colorimetric procedures, or specialized AAS techniques.

8.1 ATOMIC ABSORPTION SPECTROSCOPY (AAS)

Metals in solution can be readily determined by atomic absorption spectroscopy. The method is simple, rapid, and applicable to a large number of metals. Relative freedom from interference eliminates the need for extensive sample preparation and separation techniques. When a suitable instrument is available, the atomic absorption methods are preferable to colorimetric procedures, although concentration of the sample by solvent extraction may be required in order to achieve comparable sensitivity.

The solutions obtained as described in Chapter VII can be analyzed directly by AAS for Mn, Cu, Cr, Ni, Sn, Sr, V, Pb, Cd, Zn, Ba, Cd, Ca, and Be using the operating conditions specified in Table 10. Background correction must be used for all elements. In all cases, the standard employed

TABLE 8. COMPILATION OF ACCEPTED STANDARD PROCEDURES BY ELEMENT (References 19, 20, and 21)

Element	AOAC[19]	Standard Methods[20]	ASTM[21]
Hg	Col		
Ba	NA	AAS	NA
Be		AAS	
Cd	Col	Pol-AAS-Col	AAS
Cr		Col-AAS	AAS-Col
Cu	AAS-Col	Pol-AAS-Col	Col
Mn	AAS	Col-AAS	AAS-Col
Ni		Pol-Col	AAS
Pb	Col	Pol-AAS-Col	AAS
V		NA	
Zn	AAS	Pol-AAS-Col	AAS
F^-	Col	Specific ion electrode-Col	Col
As	Col	Col	Col
B	Col	Col	
Cl^-	NA	NA	Col
CN^-	NA	Col	Col
NO_3^-	Col	Col	Col
PO_4^{-3}	Col	Col	Col
Sb	Col		
Se	Fluorometric	Col	
Sr	NA	AE	
SO_4^{-2}		Turbidimetric	

LEGEND: AAS-Atomic Absorption Spectroscopy, AE-Atomic Emission
Col-Colorimetry, Pol-Polarography, NA-Reported Procedures Not Applicable

TABLE 9. COMPILATION OF REFERENCES FOR RECOMMENDED PROCEDURES

Element or Radical	Procedure	Page Where Found	References
Hg	Flameless AAS	8-14	22, 23, 24, 25, 6
Ba	AAS	8-6	20, 22, 24
Be	"	8-6	20, 22, 24, 6
Ca	"	8-6	19, 21, 22, 24
Cd	"	8-6	20, 21, 22, 24, 26, 27, 12, 24, 28, 29
Cr	"	8-7	20, 21, 22, 24, 29, 30, 31
Cu	"	8-7	19, 20, 22, 24, 27, 28, 29, 31
Mn	"	8-7	19, 20, 21, 22, 24, 28, 29, 31, 32
Ni	"	8-9	21, 22, 24, 28, 31
Pb	"	8-7	20, 21, 22, 24, 28, 29, 31
V	"	8-8	22, 24, 33
Zn	"	8-8	19, 20, 21, 22, 24, 27, 28, 29, 31
F^-	Specific Ion Electrode	8-12	19, 34, 35, 36
As	Colorimetric	8-9	19, 20, 21, 37, 38, 39
B	"	8-11	19, 20, 39, 40, 41
Cl^-	Titration/Colorimetric	8-33	21
CN^-	Colorimetric	8-23	20, 21
NO_3^-	"	8-44	19, 20, 21, 42
PO_4^{-3}	"	8-56	19, 20, 21
Sb	"	8-51	19
Se	H_2-Ar AAS	8-52	48
Sr	Colorimetric	8-7	20, 32
SO_4^{-2}	Gravimetric/Turbidimetric	8-18	20

TABLE 10. ATOMIC ABSORPTION OPERATING PARAMETERS

Element	Slit Widths nm	Wavelengths nm		Gas Mixture	Detection Limit ppm	Comments
		Analytical	Background			
Ba	0.4	553.6	-	N_2O-acetylene	0.02	Add 0.1% K as an ionization suppressant
Be	1.0	234.9	Ni-231.6 Non-Absorbing	N_2O-acetylene	0.005	-
Cd	0.4	228.8	226.5	Air-acetylene	0.003	-
Ca	1.0	422.7	-	N_2O-acetylene	0.005	Add 1% K as an ionization suppressant
Cr	0.2	357.9	351.9	N_2O-acetylene	0.005	-
Cu	1.0	324.7	323.4	Air-acetylene	0.003	-
Pb	0.4	283.3	282.0	Air-acetylene	0.03	-
Mn	0.4	279.5	Pb 282.0 Non-Absorbing	Air-acetylene	0.003	-
Hg	1.0	253.7	Si 252.5	Flameless	0.001	Reduction using $SnCl_2$
Ni	0.2	232.0	231.6	Air-acetylene	0.01	-
Se	1.0	196.0	Hg - 194.2	H_2 - Argon	0.003	
Sr(AE)	0.2	460.7	-	-	0.005	Use standard additions procedure to eliminate interferences
V	1.0	318.4	312.5	N_2O-acetylene	0.01	-
Zn	1.0	318.4	210.0	Air-acetylene	0.003	-

for calibration of the instrument should match the sample matrix as closely as possible. If no chemical or matrix interferences are found after performing accuracy checks, distilled water standards may be used. The implementation of either the factor method, short curve or standard addition technique (see Section 6.4) for obtaining the required accuracy is sample dependent and also depends on the skill of the analyst.

8.1.1 Types of Interferences

AAS as a general analytical tool is normally considered free of interelement interferences, and, because of the large dilutions employed, is usually unresponsive to matrix changes. However, for trace elemental analysis of coal ash and other types of solid samples, the elements of interest can be present in a very dilute form in a relatively concentrated matrix consisting of the major inorganic components of the sample and the relatively high concentrations of fluxes and acids needed for the dissolution. High solids concentrations as well as complicated matrices make it mandatory for the analyst to be aware of and to investigate the presence of interferences. The types of interferences commonly encountered are classified into the following three categories:

- Interelement or chemical interferences. For the most part, these interferences when present can be eliminated by using a high temperature N_2O-acetylene flame, or by adding suppressants.

- Matrix effects. These interferences are physical in nature and stem from the large concentrations of acids and solids in solution. These effects are compensated for by specially preparing the standards to match the expected acid and salt content of the sample, or by applying standard addition techniques.

- Molecular absorptions. This type of spectral interference can be particularly troublesome when determining trace elements in solutions of high salt content. Molecular absorptions predominately occur from species such as CaOH or SrO and result in a positive error in the absorption measurement. The Jarrell-Ash 810 AAS or equivalent is especially suited for the evaluation and elimination of this type of interference. Since molecular absorptions are normally broad, the presence of this interference can be ascertained by monitoring a non-absorbing wavelength near the wavelength of interest on a second channel. The molecular absorption, when present, is visually recorded on a strip chart recorder concurrently with the absorption of the desired element. The interference is then subtracted from the combined signal.

The following subsections discuss the known interferences for each element determinable by AAS.[22, 23, 24, 26 and 33]

8.1.1.1 Barium --

Only molecular absorbance by CaOH has been reported to interfere with the analysis of barium using an air-acetylene flame. This effect is removed when using the higher temperature N_2O-acetylene flame, although the use of this flame necessitates the addition of 1% K ion to suppress the ionization of barium.

8.1.1.2 Beryllium --

No reported interferences. Beryllium can be determined directly using an N_2O-acetylene flame. Additional sensitivity can be obtained by extracting the 8-quinolinol complex at a pH of 8.0 ±0.5 using chloroform.

8.1.1.3 Cadmium --

Cadmium is one of the metals more sensitively determined by AAS using the 228.8 nm resonant wavelength. The following elements and compounds have been found <u>not to</u> interfere at the following cation weight ratios: Cr/Cd = 1000, Ni/Cd = 1000, Mn/Cd = 1000, Co/Cd = 1000, Cu/Cd = 500, Mo/Cd = 250, Ti/Cd = 250, V/Cd = 250, Pb/Cd = 250, Al/Cd = 250. A molecular absorption interference by Fe on the Cd 228.8 nm line was found; however, it was corrected for by measuring the absorbance effect on the nonresonance 232.12 nm line. The nonresonance 226.5 line can also be used to correct for molecular absorption. Molecular absorption by a 0.01 M NaCl solution was reported by Pulidlo[43] who also reported a depression with 0.1 M H_3PO_4. No interference was found in 100 mg/l chloride salt solutions of Ba, Ca, Co, Cr, Cu, Fe, Li, Mg, Mn, or Ni. Tenth molar solutions of HNO_3 or H_2SO_4 caused no interference, nor did 0.64 M $HClO_4$. Additional sensitivity for cadmium can be obtained by extracting its APDC complex into methyl isobutyl ketone (MIBK).

8.1.1.4 Calcium --

Interferences with calcium analysis have been reported from sulfate, phosphate, alumina, and silica. These interferences are reported to be of a chemical nature and can be eliminated by making the solution 1 percent in lanthanum. No interferences have been found using 1000 ppm Cl^-, NO_3^-, NO_2^-, HCO_3^-, EDTA, Fe, Ni, Zn, Mn, Cr, B, Pb, Mg, or Na.

The following procedure[27] can be used for lanthanum addition: Wet 58.65 g lanthanum oxide (La_2O_3) with water. Add slowly 250 ml of HCl (sp gr 1.19) to the mixture. When dissolved, dilute to 1 liter with water. To 10 ml of sample, add 2.5 ml of above solution. This solution can also be used for Sr analysis.

8.1.1.5 Chromium --

Ratios of Ni/Cr = 1000, Mn/Cr = 1000, Ca/Cr - 1000, Cu/Cr = 400, and Mo/Cr = 200 in alloys and steel produced no interference on the absorbance of Cr; however, iron is a serious depressant. This effect can be reduced by the addition of ammonium chloride or by determining chromium in an N_2O-acetylene flame. In an investigation of water samples, Platte and Marcy[44] found no interference on 1 ppm Cr by 1000 ppm of SO_4^{-2}, Cl^-, PO_4^{-3}, NO_3^-, NO_2^-, HCO_3^-, Si, EDTA, Fe, Ni, Zn, Mn, B, Pb, Ca, Mg, or Na.

8.1.1.6 Copper --

No interference with copper absorption is found with 2000 ppm Ni, Cr or Mn, or 1000 ppm Co or V. Also no interference has been found for HCl, HNO_3, H_2SO_4, or H_3PO_4, 1000 ppm NO_2^-, HCO_3^-, Si, EDTA, Fe, Ni, Mn, Zn, Cr, B, Pb, Ca, Mg, or Na.

8.1.1.7 Lead --

In general, no chemical interferences have been found in lead analysis using an air-acetylene flame. The lead resonance wavelength at 217.0 nm is approximately twice as sensitive as the 283.3 nm line, but the latter is preferred because of the lower flame absorption and noise level at this wavelength. Lead is quantitatively removed over a wide pH range when an APDC-MIBK extraction system is used.

8.1.1.8 Manganese --

Manganese has few interferences in an air-acetylene flame. One ppm of manganese is unaffected by 1000 ppm Na, Mg, SO_4^{-2}, NO_3^-, NO_2^-, HCO_3^-, SiO_3, EDTA, Ni, Zn, Cr, B, or Pb.

8.1.1.9 Strontium --

Atomic emission spectroscopy is generally preferred for strontium, but atomic absorption is also acceptable. The atomic emission method enables

determination of strontium in the small concentrations prevalent in natural water supplies. The strontium emission is measured at a wavelength of 460.7 nm. Because the background intensity at a wavelength of 454 nm equals that at 460.7 nm and is unaffected by the variable strontium concentration, the difference in readings obtained at these two wavelengths allows an estimate of the light intensity emitted by strontium.

The emission intensity is a linear function of the strontium concentration and also the concentration of the other constituents in the sample. The standard addition technique distributes the same ions throughout the standards and the unknown, thereby equalizing the radiation effect of possible interfering substances in the standards and the unknown.

Only limited work on strontium by AAS has been reported. No interferences have yet been reported in a N_2O-acetylene flame, and by analogy with calcium, interferences are unlikely. The use of this high temperature flame necessitates the addition of 1 percent lanthanum as an ionization suppressant.

8.1.1.10 Vanadium --

No interference has been reported for vanadium using a N_2O-acetylene flame except a signal enhancement noted with H_3PO_4. The three strong lines at 318.34, 318.40 and 318.54 nm are normally used together and give a linear working curve to very high values of absorbance.

8.1.1.11 Zinc --

No interferences have been reported for zinc using a pre-mix air-acetylene flame. Zinc is totally extracted into MIBK as the chelate of APDC over a pH range of 2.5 to 5.

8.1.1.12 Mercury --

Trace quantities of mercury are most easily determined using a flameless atomic absorption spectrometric procedure. This technique depends on reducing mercury to the elemental state and passing the vapor through a quartz absorption cell of the spectrometer where its concentration is measured. This technique is detailed in section 8.2.4.

8.1.1.13 Nickel --

In a lean air-acetylene flame no interferences were found from solutions containing 3000 ppm Cr, 2000 ppm Mn or W, 1000 ppm Cu and Co, or 5000 ppm V, Mo and Al. No interferences were found on a 1 ppm Ni sample in the presence of 1000 ppm sulfate, phosphate, nitrate, nitrite, bicarbonate, silica, EDTA, Fe, Zn, Mn, Cr, B, Pb, Ca, Mg, or Na. Molecular absorption by CaO has been reported as an interferent of the Ni 232.0 nm line. Corrections for this absorption can be made on the 232.57 nm Ni line.

8.2 ANCILLARY TECHNIQUES

The following sections present the procedures for the quantification of As, Se, SO_4^{-2}, Hg, F, B, Sb, NO_3^-, PO_4^{-3}, CN^-, and Cl^- ions. For several radicals and elements (e.g., SO_4^{-2}, NO_3^-, CN^-, and Cl^-), more than one analytical procedure is specified. This permits a choice of methods if either the concentration levels or presence of interfering elements will favor one procedure or another. Interferents are specified where known and applications of the procedure to specific sample types are given where appropriate.

8.2.1 Arsenic Analysis

A sample of coal is mixed with MgO and combusted at 550°C (1022°F) in a muffle furnace. The residue is transferred to a 125 ml Erlenmeyer flask and treated with HCl and KI. Stannous chloride and metallic Zn are added and the arsenic is then volatilized as arsine and absorbed in a silver diethyldithiocarbamate pyridine solution. The quantitative determination is performed by comparing the absorbance of the developed color at 540 nm to standards.

Fly ash samples are run using the same procedure except that a 0.1 g sample is weighed directly into the Erlenmeyer flask. The MgO sintering step is omitted.

8.2.1.1 Apparatus and Reagents --

- 20 percent w/v KI solution - 20 g KI, dissolve in 100 ml deionized water
- $SnCl_2$ solution - Dissolve 100 g $SnCl_2$ in 100 ml concentrated HCl; assist solution with application of heat
- Acidified water - Dissolve 5 ml conc. H_2SO_4 in 500 ml water

- MgO - reagent grade
- Zn - 40-mesh granular
- Lead acetate solution - saturated in water
- Silver diethyldithiocarbamate, pyridine solution - Dissolve 5 g of reagent grade salt in one liter of pyridine. Allow the solution to stand in a covered container for 48 hours. Filter the solution through a Whatman No. 40 filter and store over molecular sieves in a brown bottle.

8.2.1.2 Analysis Procedure

To a procelain crucible, add 1.0 g sample and 1.0 g MgO, and mix the contents. To another porcelain crucible, add 1.0 g MgO and no sample. This will be used later for the blank. Place all crucibles into a muffle furnace and heat slowly to 550°C (1022°F) and maintain at this temperature for 1-1/2 hours. Remove from oven and allow to cool. Transfer the fused mass to a wide-mouthed Erlenmeyer flask using three 5 ml rinsings of acidified water. Before transferring, wet the sample by slowly rinsing down the sides of the crucible with the acidified water. Repeat until the sample is completely wetted. Wash crucible with the acid water solution until an approximate volume of 50 ml is attained. Repeat following the same procedure with the blank. For fly ash samples, weigh 0.1 g directly into an Erlenmeyer flask followed by 50 ml H_2O.

To all the flasks, add 5.0 ml conc. HCl, 2.0 ml of KI solution and 1.0 ml of the $SnCl_2$ solution. Allow the solutions to stand for 15 minutes. Fly ash samples are heated gently for 15 minutes. At the end of this time, the reaction flasks are connected to a receiving flask by a tube containing glass wool to which a few drops of a saturated lead acetate scrubbing solution have been added. Transfer 10 ml of silver diethyldithiocarbamate pyridine solution to the receiving flask and a 3 g portion of granular zinc to the reaction flask. Connect the reaction and receiving flasks together in as short a time as possible to prevent any arsine gas loss. After allowing 30 minutes for complete gas evolution, remove the receiver vessel and mix the solution by bubbling nitrogen through the solution to remove any residue that is adhering to the side wall. Transfer the absorbing solution to 1-cm quartz cells and measure its absorbance at 540 nm against the blank reagent using a spectrophotometer.

8.2.1.3 Standardization Procedures --

Before running As determinations, prepare a 100 ppm As stock solution (10 ml of 1000 ppm As diluted to 100 ml with distilled water). Once the stock solution is prepared, take 1, 2, 5, 10, and 15 ml portions of the 100 ppm standard, transfer to five 100 ml volumetric flasks and dilute to marks with distilled water. These 1, 2, 5, 10, and 15 ppm As solutions are the working standards.

Place one gram of MgO in each of six ceramic crucibles and heat in a 550°C (1022°F) muffle for 1-1/2 hours. Remove and cool; transfer to a 125 ml Erlenmeyer flask with acidified water. Pipet one ml of each of the five standards into its respective Erlenmeyer flask and proceed as above. Note the following:

1) The pyridine-silver diethyldithiocarbamate solution will deteriorate slightly and, if not filtered, will lead to erratic values.

2) The type of mesh zinc used appears to have some bearing on the arsine evolution. Therefore, only one bottle should be designated for use and a new calibration curve should be run when another bottle is employed.

3) Heating the reaction solution facilitates the evolution of arsine and has proved helpful in improving the accuracy of the analysis.

8.2.2 Boron Analysis

The coal is gently ashed at 550°C (1022°F), then fused with Na_2CO_3. After dissolving the fusion mixture in HCl, the boric acid is extracted with 2-ethyl-1, 3-hexanediol and determined as the rosocyanine complex in 95 percent ethanol. This procedure is applicable for coals and fly ash containing from 1-400 ppm B.

8.2.2.1 Apparatus and Reagents --

- 10 ppm standard boron solution. Prepare by appropriate dilution of 1000 ppm stock boron solution, 2-ethyl-1, 3-hexanediol - 10 percent solution in chloroform.

- Curcumin reagent, 0.375% (w/v). Dissolve 0.375 g curcumin in 100 ml glacial acetic acid; filter the solution and store it in a darkened polyethylene bottle.

- Ethanol - 95% reagent grade.

- Sulfuric acid - high purity (Van Waters and Rogers ultrex grade).
- Na_2CO_3 - high purity (Van Waters and Rogers ultrex grade).
- 1N HCl. Transfer 28 ml high purity concentrated HCl to a 1-liter flask and fill to the mark with distilled water.

8.2.2.2 Analysis Procedure --

Weigh 1 g coal ±0.1 mg into a platinum crucible; ash at 550°C (1022°F) for 1 hour. Fuse residue with 1 g of Na_2CO_3, then dissolve the melt with 10 ml 1N HCl and dilute to 100 ml. For fly ash samples, weigh 0.1 g into platinum crucible and fuse with 1 g Na_2CO_3 and proceed as above. Pipet 2 ml of this solution into a 10-ml Nalgene centrifuge tube and extract by shaking with 2 ml 2-ethyl-1,3-hexandiol in $CHCl_3$. Syringe off the liquid phase and pipet 0.5 ml of the organic phase into a 50-ml Nalgene volumetric flask. Add 1 ml of curcumin reagent followed by 0.3 ml of conc. H_2SO_4 and allow to react for 15 minutes. Adjust the volume to 50 ml with reagent grade 95 percent ethanol and read absorbance at 550 nm against 95 percent ethanol. Run a reagent blank concurrently and subtract this absorbance from the sample absorbance. The boron concentration of the sample is calculated from a standard curve using the adjusted sample absorbance reading.

8.2.2.3 Standardization Procedures --

Prepare standard solutions containing 0.1, 0.2, 0.5, 1.0, 2.0, and 3.0 ppm boron by successive dilution of the 10 ppm standard. Pipet 2 ml of prepared standard into a Nalgene centrifuge and proceed as per general procedure. Note that all apparatus is to be washed with 1:1 HNO_3.

8.2.3 Fluoride Analysis

Coal is mixed with benzoic acid, pressed into a pellet and combusted in a Parr bomb, and the combustion gases are scrubbed with a dilute caustic solution. The pH of the solution is adjusted to 5.2-5.3 and CO_2 expelled by gentle heating. The fluoride concentration is then determined using a specific ion electrode procedure after readjusting the pH and addition of a citrate, KNO_3 solution.

8.2.3.1 Apparatus and Reagents --

- 1N NaOH. Prepared from high purity reagents.
- 0.5N H_2SO_4. Prepared from high purity reagents.
- Sodium citrate, KNO_3 buffer solution. Dissolve 294 g of citric acid trisodium salt dihydrate and 20 g of KNO_3 in one liter of high purity water.
- Fluoride standard. Prepare a series of standard fluoride solutions in the following molar concentrations: 0.0005, 0.001, 0.005, 0.01, 0.05, 0.10. Prepare by dissolving high purity KF in buffer.

8.2.3.2 Procedure --

Mix a 1 g coal sample, ground to pass a 100-mesh screen, with about 0.25 g benzoic acid (primary standard) and place in a fused quartz sample holder within a Parr combustion bomb that contains 10 ml of 1N NaOH. Pressurize the bomb to about 28 atmospheres oxygen and ignite the contents. Allow at least 15 minutes to elapse before depressurizing the bomb. Use three approximate 5 ml aliquots of distilled water to rinse the bomb contents into a 50 ml plastic beaker (plastic-ware is used from here on).

The beaker contents are magnetically stirred wtih a Teflon bar while the pH is adjusted to 5.2-5.5 with 0.5N H_2SO_4. (The initial pH before adjustment will be about 7.0.) Place the beaker in a hot water bath for about 10 minutes, remove it, and again stir to drive off most of the dissolved CO_2. Add 5 ml of 1M sodium citrate-citric acid KNO_3 buffer (pH 6.3) to the beaker contents. Adjust the total volume to 50 ml with distilled water and cool to room temperature. Read the potential of the solution using a fluoride specific ion electrode vs a saturated calomel reference electrode. In some cases, about 10 minutes are required for equilibrium to be attained. Add 1 ml of 0.01M F to the solution, mix the solution well, and read the potential of the solution again.

The pH is critical for the initial potential reading. At 5.0 to 5.5, final results tend to be low because of F^- complexing with H^+. Above 6.5, final results tend to be high because of interference by OH^- or HCO_3- at 1000 to one concentration over the F.

8.2.3.3 Concentration Calculations --

The concentration of fluoride in the coal sample is calculated using the following formulas:

$$F_S = \frac{\Delta F}{(\exp [\Delta E/S] - 1)}$$

$$F_C = \frac{50 \times F_S - (W_1 \times FB)}{W_2}$$

where

F_S = fluoride content of the solution

ΔF = change in F concentration due to addition of spike = 3.8 ppm

ΔE = change in potential readings = $E_2 - E_1$

S = slope of mv vs ln (F^-) concentration for the electrode, S = -22.95

F_C = fluoride concentration of coal

W_1 = weight benzoic acid, g

FB = F content of benzoic acid

W_2 = weight of coal taken for analysis, g

8.2.4 Mercury Analysis

The flameless cold vapor technique is used to analyze for mercury in solution. This technique permits routine analysis at the ppb level; modifications permit analysis of 0.1 ppb (or lower) solutions. Organic solid samples (i.e., coal) can also be analyzed by burning the sample in a combustion bomb, absorbing the mercury vapor in nitric acid, and analyzing the solution.

8.2.4.1 Apparatus and Reagents --

- Mercury reduction apparatus. The usual design, consisting of a jar incorporating a two-hole rubber stopper through which are passed a gas bubbler tube and a short gas outlet tube, can be used; the contents are stirred using a magnetic stirrer and stirring bar. The design is essentially a U-tube with a glass

frit in one side. The frit serves as the mixing device as well as the gas bubbler, thus precluding the use of the magnetic stirrer.

- Atomic absorption spectrophotometer. Use mercury hollow cathode lamp and a wavelength of 253.7 nm.

- Absorption cell. A cylindrical tube approximately 25 mm I.D. x 125 mm long, with quartz windows, and incorporating inlet and outlet sidearms to permit introduction and discharge of carrier gas. This type of cell is available commercially from several manufacturers of atomic absorption equipment, or it may be constructed from readily available materials. In the latter case, the cell should be tested carefully for possible leakage after assembly. The cell is mounted in the optical path of the AAS.

- Flowmeter. Capable of measuring gas flows in the range of 1.9 liters-min^{-1} (4 ft^{3}-hr^{-1}).

- Scavenging tube. This tube is filled with soda lime and is connected between the gas outlet tube of the reduction vessel and the inlet sidearm of the absorption cell. The soda lime is replaced every 25 determinations; otherwise, a loss in sensitivity occurs. Tygon tubing is used as connecting tubing; no interferences have been noted.

In the case of solid samples, the following combustion apparatus and reagents are required:

- Oxygen bomb. Standard 360 ml stainless steel combustion bomb as used for coal calorimetry [45].

- Combustion crucible. Vycor or quartz crucible of proper size to fit the bomb sample holder (A.H. Thomas No. 3879-C or equivalent).

- Firing wire. No. 34 B & S gauge nickel-chromium alloy wire, 10 cm length.

- Firing circuit. As described in Reference 45.

- Stock mercury solution, approximately 1 gram/liter (1000 ppm). Weigh one gram of pure, elemental mercury to the nearest 0.1 mg and dissolve in a solution consisting of 150 ml reagent water and 50 ml concentrated HNO_3 (sp. gr. 1.42). Dilute this solution to 1000 ml with reagent water. The final solution contains approximately 1000 ppm mercury (record exact concentration) in a matrix of 5 percent v/v nitric acid.

- Standard mercury solutions. Prepare working standard solutions of mercury down to 1 ppm by serial dilutions of the 1000 ppm Hg stock solution with 5 percent v/v HNO_3. Such

solutions can be assumed to be stable for up to one week. Below 1 ppm Hg, standard solutions should be prepared daily and diluted with 5 percent HNO_3 and/or reagent water as appropriate so the final solution matrix is approximately 1 percent v/v HNO_3.

- Nitric Acid Solution. Dilute 500 ml conc. nitric acid to 1000 ml.

- Stannous Chloride Solution. Dissolve 20 g of $SnCl_2 \cdot 2H_2O$ in 20 ml conc. HCl (warm the solution to accelerate the dissolution process) and dilute to 100 mls.

- Argon Carrier Gas.

8.2.4.2 Standardization Procedures --

Standards in the range of 1 ppb-10 ppb are made. To the reduction vessel, transfer 10 ml nitric acid solution, 5 ml of a standard solution, and 5 ml of the stannous chloride solution. Close the system immediately. For our system, initiate the argon flow at 1.9 liters-min^{-1} (4 ft^3 hr^{-1}); for the conventional system, stir for one minute, then initiate the argon flow[1]. Repeat the procedure for varying concentrations of mercury throughout the specified range. For our system, a loss in sensitivity is noted unless the glass frit is cleaned between analyses (flush with 1:1 nitric acid, followed by deionized water).

Blanks should be run using a deionized water in place of the standard. Plot absorption (peak height) against standard concentration to obtain a working curve.

8.2.4.3 Solution Analysis Procedures --

Aqueous samples can be analyzed by a procedure identical to that used for standardization. If a different sample size (e.g., 50 ml instead of 5 ml) is used, a new calibration curve must be constructed using the new sample size.

---

[1]The optimum flow rate depends on the size of the absorption cell. Several flow rates should be tried until maximum sensitivity is obtained.

Strongly oxidative solutions require modifications to the procedure. Larger amounts of stannous chloride reagent must be used, and a "reaction time" (typically one minute) must be allowed after the system is closed but prior to initiating the argon flow. As recovery of mercury from these solutions is usually not quantitative, standard additions should be performed on these samples. Of course, blanks must be run on these oxidative solutions.

Silver ion appears to interfere by forming silver chloride which clogs the glass frit.

8.2.4.4 Organic Solids Analysis Procedures --

Mix 1 g of coal and ∿0.25 g of benzoic acid. Press into a pellet and place in a fused quartz crucible. Transfer 10 ml of nitric acid solution to the bomb; place the crucible in the electrode support of the bomb and attach the fuse wire. Assemble the bomb and add oxygen to a pressure of 24 atmospheres (gauge). Place the bomb in the calorimeter (a cold water bath in a large stainless steel beaker is also satisfactory) and ignite the sample using appropriate safety precautions ordinarily employed in bomb calorimetry work.

After combustion, the bomb should be left undisturbed for 10 minutes to allow temperature equilibration and the absorption of soluble vapors. Release the pressure slowly and transfer the contents of the bomb (and crucible) to the mercury reduction vessel by washing with nitric acid solution.[2]

Rinse the bomb, electrodes, and crucible thoroughly with several small washings of nitric acid, then dilute the contents of the reduction vessel with nitric acid to a total volume of 50 ml. Proceed with the determination

[2] If there is any question as to whether the sample has undergone complete oxidation during combustion, add 5 percent potassium permanganate solution dropwise until a pink color persists.

as described under section 8.2.4.2. Calculate the amount of mercury content as follows:

$$\text{Hg content (ppm)} = \frac{W_1}{W_2}$$

where

W_1 = weight of mercury, μg
W_2 = weight of coal sample, g

As the bomb ages, there may be a tendency for mercury to become trapped in the bomb wall fissures during combustion. In addition, if the same bomb is used for normal calorimetry work, there may be a tendency for mercury to accumulate in the bomb with time. Consequently, before a series of mercury determinations is undertaken, several blank determinations should be made by firing benzoic acid pellets (approximately 1 gram) in place of the coal. Benzoic acid firings should be repeated until a stable, consistently low blank value is obtained. This final blank value is then used to correct the mercury values obtained for subsequent coal samples.[3]

8.2.5 Sulfate by the Gravimetric Method

Sulfate is precipitated in a hydrochloric acid medium as barium sulfate by the addition of barium chloride. The precipitation is carried out near the boiling temperature, and after a period of digestion the precipitate is filtered, washed with water until free of chlorides, ignited or dried, and weighed as $BaSO_4$.

The gravimetric determination of sulfate is subject to many errors, both positive and negative. In potable waters where the mineral concentration is low, these may be of minor importance. The analyst should be familiar with the more common interferences, however, so that he can apply corrective measures when necessary.

[3]The condition of the interior of the bomb should be inspected at frequent intervals. If evidence of significant pitting or corrosion is observed (usually indicated by erratic mercury values for samples or benzoic acid blanks), the bomb should be returned to the manufacturer for reconditioning.

1. Interferences Leading to High Results - Suspended matter, silica, barium chloride precipitant, nitrate, sulfite, and water are the principal factors in positive errors. Suspended matter may be present in both the sample and the precipitating solution; soluble silicate may be rendered insoluble and sulfite may be oxidized to sulfate during processing of the sample. Barium nitrate, barium chloride, and water are occluded to some extent with the barium sulfate, although water is driven off if the ignition temperature is sufficiently high.

2. Interferences Leading to Low Results - Alkali metal sulfates frequently yield low results. This is especially true of alkali hydrogen sulfates. Occlusion of alkali sulfate with barium sulfate causes the substitution of an element of lower atomic weight than barium in the precipitate. Hydrogen sulfates of alkali metals act similarly and, in addition, decompose on being heated. Heavy metals, such as chromium and iron, cause low results by interfering with the complete precipitation of sulfate and by formation of heavy metal sulfates. Barium sulfate has small but significant solubility, which is increased in the presence of acid. Although an acid medium is necessary to prevent precipitation of barium carbonate and phosphate, it is important to limit its concentration to minimize the solution effect.

8.2.5.1 Apparatus and Reagents --

- Steam bath.
- Drying oven, equipped with thermostatic control.
- Muffle furnace, with heat indicator.
- Desiccator, preferably containing a desiccant with color indicator of the water content.
- Analytical balance, capable of weighing to 0.1 mg.
- Filters: either acid-washed, ashless hard-finish filter paper sufficiently retentive for fine precipitates, or porous-bottom silica or porcelain crucible with a maximum pore size of 5 microns.
- Filtering apparatus, appropriate to the type of filter selected.
- Methyl red indicator solution. Dissolve 100 mg methyl red sodium salt in distilled water and dilute to 100 ml.
- Hydrochloric acid - 50 percent v/v.

- Barium chloride solution. Dissolve 100 g $BaCl_2 \cdot 2H_2O$ in 1 liter distilled water. Filter through a membrane filter or hard-finish filter paper before use; 1 ml of this reagent is capable of precipitating approximately 40 mg SO_4.

- Silver nitrate-nitric acid reagent. Dissolve 8.5 g $AgNO_3$ and 0.5 ml reagent grade HNO_3 in 500 ml distilled water.

8.2.5.2 Analysis Procedure --

1. Removal of cation interference - If the total cation concentration in the sample is 250 mg/l or more, or if the total heavy metal ion concentration in the sample is 10 mg/l or more, pass the sample portion intended for sulfate precipitation through a cation-removing ion-exchange column.

2. Removal of silica - If the silica concentration exceeds 25 mg/l, evaporate the sample nearly to dryness in a platinum dish on a steam bath. Add 1 ml HCl, tilt the dish, and rotate it until the acid comes in contact with the residue on the sides; continue the evaporation to dryness. Complete the drying in an oven at 180°C (356°F) and if organic matter is present, char over the flame of a burner. Moisten the residue with 2 ml distilled water and 1 ml HCl, and evaporate to dryness on a steam bath. Add 2 ml HCl, take up the soluble residue in hot water, and filter. Wash the insoluble silica with several small portions of hot distilled water. Combine the filtrate and washings.

3. Precipitation of barium sulfate - Adjust the clarified sample, treated if necessary to remove interfering agents, to contain approximately 50 mg sulfate ion in a 250 ml volume. Record the volume of sample taken. Adjust the acidity with HCl to pH 4.5-5.0, using a pH meter or the orange color of methyl red indicator. Then add an additional 1 to 2 ml HCl to the solution. Lower concentrations of sulfate ion can be tolerated if it is impracticable to concentrate the sample to the optimum level, but in such cases it is better to fix the total volume at 150 ml. Heat the solution to boiling and, while stirring gently, add warm barium chloride solution slowly until precipitation appears to be complete, then add about 2 ml in excess. If the amount of precipitate is small, add a total of 5 ml barium chloride solution. Digest the precipitate at 80-90°C (176-194°F) preferably overnight but for not less than 2 hours.

4. Preparation of filters - If paper filters are used, prepare in the conventional manner. For silica or porcelain crucible, preignite at 800°C (1472°F) for 1 hour, cool in a desiccator, and weigh.

5. Filtration and weighing - Mix a small amount of ashless filter paper pulp with the barium sulfate and filter at room temperature. The pulp aids filtration and reduces the tendency of the precipitate to creep. Wash the precipitate with small portions of warm distilled water until the washings are free of chloride, as indicated by testing with silver nitrate-nitric acid reagent. Dry the filter and the precipitate, and ignite at 800°C (1472°F) for 1 hour. Do not allow the filter paper to flame. Cool in a desiccator and weigh the crucible and contents.

6. Calculation

$$\text{Sulfate content (mg/l)} = \frac{(W)(411.5)}{v}$$

where

W = weight of barium sulfate preciptitate, mg

v = volume of sample taken for analysis, ml

8.2.6 Sulfate by Turbidimetric Method

Sulfate ion is precipitated in a hydrochloric acid medium with barium chloride in such manner as to form barium sulfate crystals of uniform size. The absorbance of the barium sulfate suspension is measured by a nephelometer or transmission photometer and the sulfate ion concentration is determined by comparison of the reading with a standard curve.

Color or suspended matter in large amounts will interfere with this method. Some suspended matter may be removed by filtration. If both are small in comparison with the sulfate ion concentration, interference is corrected for as indicated in Section 8.2.6.2. Silica in excess of 500 mg/l will interfere, and in waters containing large quantities of organic material it may not be possible to precipitate barium sulfate satisfactorily.

There are no ions other than sulfate in normal waters that will form insoluble compounds with barium under strongly acidic conditions. Determinations should be made at room temperature, which may vary over a range of 10°C (18°F) without causing appreciable error.

The minimum detectable concentration is approximately 1 mg/l sulfate.

8.2.6.1 Apparatus and Reagents --

- Magnetic stirrer. It is convenient to incorporate a timing device to permit the magnetic stirrer to operate for exactly 1 minute. The stirring speed should not vary appreciably. It is also convenient to incorporate a fixed resistance in series with the motor operating the magnetic stirrer to regulate the speed of stirring. If more than one magnet is used, they should be of identical shape and size. The exact speed of stirring is not critical, but it should be constant for each run of samples and standards and should be adjusted to about the maximum at which no splashing occurs.

- Photometer. One of the following is required with preference in the order given: nephelometer, such as Coleman Model #9; spectrophotometer, for use at 420 nm and providing a light path of 4-5 cm; filter photometer, equipped with a violet filter having maximum transmittance near 420 nm and providing a light path of 4-5 cm.

- Stopwatch, if the magnetic stirrer is not equipped with an accurate timer.

- Measuring spoon, capacity 0.2-0.3 ml.

- Conditioning reagent. Mix 50 ml glycerol with a solution containing 30 ml concentrate HCl, 300 ml distilled water, 100 ml 95 percent ethyl or isopropyl alcohol, and 75 g sodium chloride.

- Barium chloride, crystals, 20-30 mesh.

- Standard sulfate solution. Prepare a standard sulfate solution by diluting 10.41 ml of standard 0.0200N H_2SO_4 titrant to 100 ml with deionized water. Dissolve 147.9 mg anhydrous sodium sulfate, Na_2SO_4, in distilled water and dilute to 1000 ml.

8.2.6.2 Analysis Procedure --

1. Formation of barium sulfate turbidity - Measure 100 ml sample, or a suitable aliquot made up to 100 ml, into a 250-ml Erlenmeyer flask. Add exactly 5.00 ml conditioning reagent and mix in the stirring apparatus. While the solution is being stirred, add a spoonful of barium chloride crystals and begin the timing immediately. Stir for exactly 1 minute at a constant speed.

2. Measurement of barium sulfate turbidity - Immediately after the stirring period has ended, pour some of the solution into the absorption cell of the photometer and measure the turbidity at 30-second intervals for 4 minutes. Since maximum turbidity

usually occurs within 2 minutes and the readings remain constant thereafter for 3 to 10 minutes, consider the turbidity to be the maximum reading obtained in the 4-minute interval.

3. Preparation of calibration curve - Estimate the sulfate concentration in the sample by comparing the turbidity reading with a calibration curve secured by carrying sulfate standards through the entire procedure. Space the standards at 5 mg/l increments in the 0 to 40 mg/l sulfate range. Above 40 mg/l the accuracy of the method decreases and the suspensions of barium sulfate lose stability. Check reliability of the calibration curve by running a standard with every three or four unknown samples.

4. Correction for sample color and turbidity - Correct for the color and turbidity present in the original sample by running blanks from which the barium chloride is withheld.

5. Calculation

$$\text{Sulfate content (mg/l)} = \text{interpolated from calibration curve}$$

8.2.7 Cyanide Analysis

These methods cover the determination of soluble and insoluble cyanides in water by a modified Liebig titration when the cyanide level is known to be greater than 1 mg/liter (ppm) as CN^-, and by a colorimetric procedure for lower concentrations. By an alkaline chlorination, the methods can be used to determine cyanides amenable to chlorination. The methods do not distinguish between CN^- and CN complexes. Furthermore, they do not reveal the cyanates,[4] the organo-cyanide complexes,[5] or the cyanogen halides, except for cyanogen chloride,[6] which may be determined separately.

---

[4] The cyanate complexes are decomposed when the sample is acidified in the distillation procedure.

[5] Only those organo-cyanic compounds will be revealed which hydrolyze in water or an alkaline medium, or are decomposed by mineral acids to simple cyanides.

[6] Cyanogen chloride is the most common of the cyanogen halide complexes as it is a reaction product usually obtained when chlorinating cyanide-containing industrial wastewater.

The methods for the determination of cyanide require a distillation procedure for concentrating and removing cyanides by refluxing the sample with dilute sulfuric acid and cuprous chloride reagent. The liberated hydrogen cyanide is collected in sodium hydroxide and its concentration determined by either a colorimetric or titrimetric procedure.

The methods include procedures to remove the following interferences:

- Oxidizing agents, which can destroy the cyanide during manipulation. If chlorine is present, add ascorbic acid as soon as the sample is collected.
- Sulfides, which adversely affect the modified Liebig titration.
- Fatty acids, which form soaps under the alkaline titration conditions, making the end point almost impossible to detect.
- Other interferences including substances that might contribute color or turbidity, the cyanate or thiocyanate, and the organic nitrogen compounds, particularly amino acids. In most cases, the distillation procedure will remove these interfering substances.

It is beyond the scope of these methods to describe procedures for overcoming all the possible interferences that may be encountered. The procedures used must sometimes be revised to meet the specific requirements (see References 20 and 21 for alternate approaches).

8.2.7.1 Apparatus and Reagents --

- Buret, 25 ml, used for standardization of potassium cyanide (KCN) solution only.
- Distillation apparatus. (See Figure 9.) The reaction vessel is a 1-liter, two-neck distilling flask with 19/38 standard-taper joints. The side neck is fitted with a joint-reduced lower stem of 8-mm inside diameter, broken off to reach within 6 mm of the bottom of the flask. Fitted into the other neck is a coldfinger, separable-type condenser with 19/38 standard-taper joints. A vacuum-type absorber with a medium-porosity, gas-dispersion tube sealed to the lower end of the 19/38 standard-taper inner joint and sealed to the absorber inlet are necessary. The absorber tube should be approximately 200 mm long and 29 mm in diameter. A vacuum line with a screw clamp for adjustment is connected to the vacuum connection of the absorber. The reaction flask is heated with an electric heater.

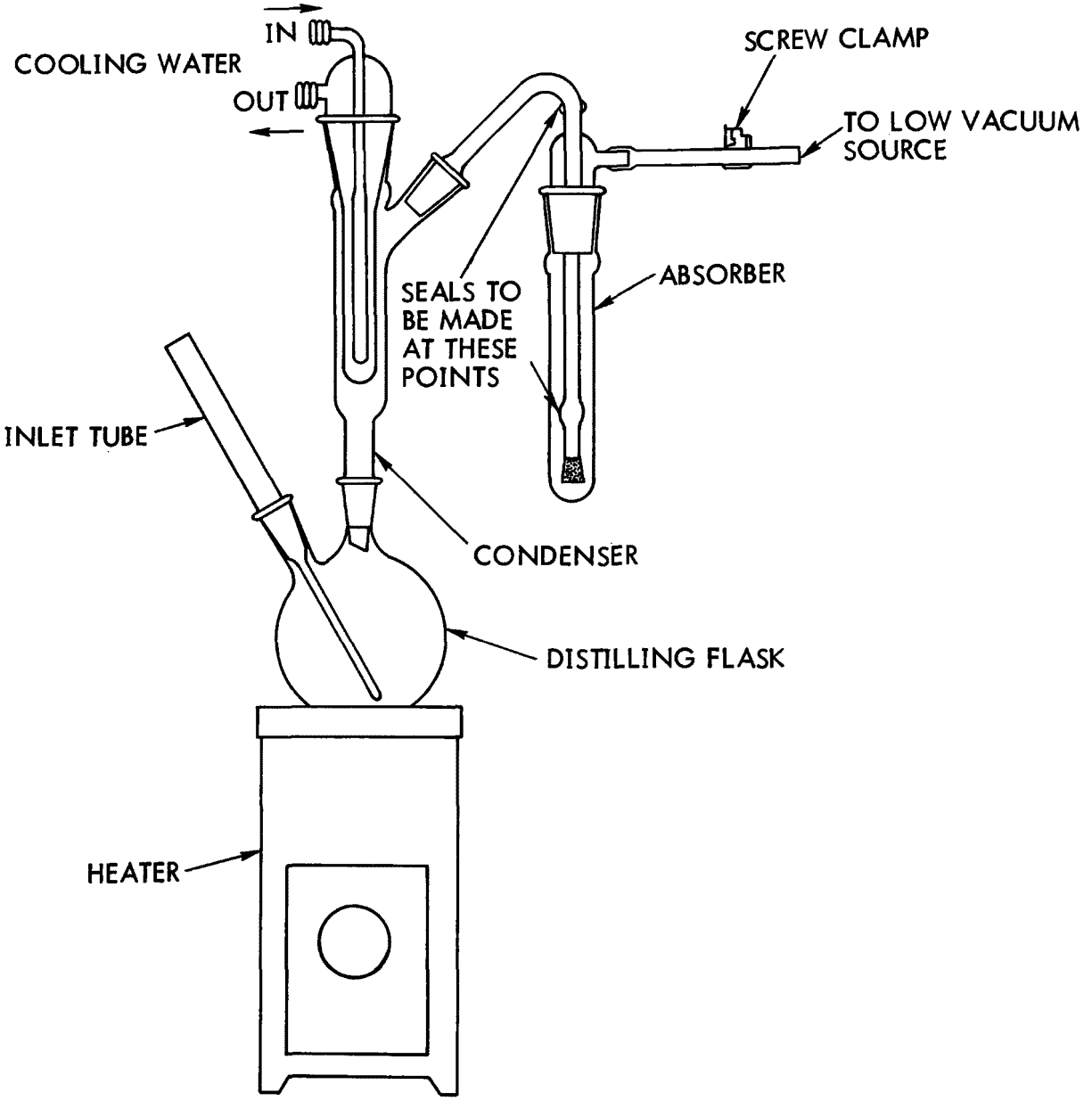

Figure 9. Cyanide distillation apparatus.

- Five-milliliter microburet, used in the modified Liebig titration.

- Spectrophotometer or filter photometer, suitable for measurement at 620 nm, using 1.0-cm absorption cells. Filter photometers and photometric practices used in this method shall conform to ASTM Recommended Practice E60, Photometric Methods for Chemical Analysis of Metals. Spectrophotometers shall conform to ASTM Recommended Practice E275, for Describing and Measuring Performance of Spectrophotometers.

- Acetic acid (10 percent v/v). Mix one volume of glacial acetic acid with nine volumes of water.

- Ascorbic acid, reagent grade.

- Bis-Pyrazolone. This reagent can be purchased commercially, in 100 ml of 95 percent ethanol. Add 25 g of freshly distilled phenylhydrazine and reflux the mixture for at least 4 hours. Filter out the insoluble portion and wash with hot alcohol. The product (melting point greater than 320°C or 608°F) is stable indefinitely in dry form.

- Cadmium carbonate, powdered. This reagent is used if the sample contains sulfides which would interfere with the titration.

- Calcium hypochlorite solution (50 g/liter). Dissolve 5 g calcium hypochlorite $Ca(OCl)_2$ in 100 ml water. Store the solution in an amber-covered glass bottle in the dark. Prepare fresh monthly.

- Chloramine-T (1 percent w/v). Dissolve 1.0 g of the white-colored, water-soluble grade powder in 100 ml of water. Prepare fresh weekly.

- Cuprous chloride reagent. Transfer a weighed 20 g portion of finely-powdered cuprous chloride (Cu_2Cl_2) into an 800-ml beaker; wash twice, by decantation, with 250 ml portions of dilute sulfuric acid (H_2SO_4, 2 percent w/v) and then twice with water. Add about 250 ml of water; then add concentrated hydrochloric acid (HCl, sp gr 1.19) in 0.5 ml portions until the salt dissolves.[7] Dilute to 1 liter with water and store in a tightly-stoppered bottle containing a few lengths of pure copper wire or rod extending from the bottom of the mouth of the bottle.[8]

---

[7] The reagent should be clear; dark discoloration indicates the presence of cupric salts.

[8] If it is desired to use a reagent bottle of smaller volume, it should be kept completely filled and tightly stoppered. Refil it from the stock solution after each use.

- Iso-octane, hexane, or chloroform (solvent preference in the order named). The solvent is used for extraction if the sample contains fatty acids which would interfere with the titration.

- 1-Phenyl-3-Methyl-5-Pyrazolone.

- Potassium cyanide, standard solution (1 ppm CN). Dilute 10 ml of the stock KCN solution to 1 liter with water. Mix thoroughly, make a second dilution of 10 ml diluted to 100 ml, 1 ml of this solution containing 1 μg of CN^-. Prepare this solution fresh daily and keep in a glass-stoppered bottle.

- Potassium cyanide, stock solution (1000 ppm CN). Dissolve approximately 2 g potassium hydroxide (KOH) and 2.51 g potassium cyanide (KCN) in 1 liter of water. (Caution - Because KCN is highly toxic, avoid contact or inhalation.) Standardize against the silver nitrate standard solution by the modified Liebig titration using 25 ml of the KCN solution. Prepare fresh weekly.

- Potassium iodide-starch test paper.

- Pyridine.

- Pyridine-pyrazolone reagent. Prepare daily.

  Solution A. Add 0.25 g of 1-phenyl-3-methyl-5-pyrazolone to 50 ml of water. Heat the solution to about 60°C (140°F) with stirring. Cool to room temperature.

  Solution B. Dissolve 0.01 g of bis-pyrazolone in 10 ml of pyridine.

  Mixed reagent. Filter solution A through coarse-grade filter paper and collect the filtrate in a 100 ml beaker. Then pour solution B through the same filter paper and collect the filtrate in the same beaker containing solution A. This mixed reagent develops a pink color, but this does not affect the color production with cyanide if used within 24 hours.

- Rhodanine indicator (0.2 g/liter). Dissolve 0.02 g of (p-dimethylaminobenzylidene) rhodanine in 100 ml of acetone.

- Silver nitrate, standard solution (1 ml = 1 mg CN^-). Crush approximately 5 g silver nitrate ($AgNO_3$) crystals and dry to constant weight at 40°C (104°F). Dissolve 3.2647 g in water and dilute to 1 liter with water.

- Sodium hydroxide solution (50 g/liter). Dissolve 50 g of sodium hydroxide in water and dilute to 1 liter with water.

- Sulfuric acid (50 percent v/v). Carefully add 1 volume of concentrated sulfuric acid (H_2SO_4) to 1 volume of water, with constant stirring and cool.

8.2.7.2 Safety Precautions --

Because of the toxicity of cyanide, great care must be exercised in its handling. Acidification of cyanide solutions produces HCN. All manipulations should be done in the hood so that any HCN that might escape is safely vented.

If a cyanide solution or a cyanide-containing waste is spilled on the skin, wash it off with plenty of water. If splashed in the eyes, irrigate with running water for 15 minutes and call a physician at once. If swallowed, call a physician and give inhalations of amyl nitrite or ammonia for 15 to 30 sec every 15 minutes for 1 hour; when the patient is conscious, give emetics (warm salt water) until his vomit fluid is clear.

8.2.7.3 Pretreatment --

The following treatments for interference from sulfides, fatty acids, or oxidizing agents are indicated. Care should be taken to reduce the time for removal of interference to a minimum to avoid loss of cyanide.

Sulfides are removed by treating about 25 ml more of the alkaline sample (pH > 11) than necessary for the cyanide determination with powdered cadmium carbonate and mixing. Yellow cadmium sulfide precipitates in samples containing sulfides. Repeat this operation until a drop of the treated sample solution does not darken a lead acetate test paper. Filter the solution through a dry filter paper into a dry beaker and from the filtrate measure the sample to be used for analysis. Avoid a large excess of cadmium and a long time of contact in order to minimize a loss of complexation or occlusion of cyanide with the precipitated material.

Fatty acids are removed by extraction as suggested by Kruse and Mellon.[47] Acidify the sample with acetic acid to pH 6.0 to 7.0. (Caution: This operation must be performed in the hood and the sample left there until it can be made alkaline again after the extraction has been performed.) Extract with iso-octane, hexane, or chloroform (preference in order named) with a solvent volume equal to 20 percent of the sample volume. One extraction is usually adequate to reduce the fatty acids below the

interference level. Avoid multiple extractions or a long time at low pH in order to keep loss of HCN at a minimum. When the extraction is completed, raise the pH to greater than 12 with NaOH solution.

Oxidizing agents are treated with a reducing agent, ascorbic acid. Test a drop of the sample with potassium iodine-starch test paper (KI-starch paper); a blue color indicates the need for this treatment. Add ascorbic acid, a few crystals at a time, until a drop of sample produces no color on the indicator paper. Then add an additional 0.5 g ascorbic acid.

If uncertain of cyanide concentration, distill a 500 ml sample, dilute the absorption liquid and washings to 250 ml, and titrate a 200 ml aliquot. If this titration indicates the cyanide concentration to be less than 1 mg/liter (ppm), determine the cyanide concentration colorimetrically on the remaining portion.

If cyanides amenable to chlorination are to be determined, add $Ca(OCl)_2$ dropwise to one part while agitating and maintaining the pH between 11 and 12 by the addition of NaOH solution. Test for chlorine by placing a drop on a strip of KI-starch paper. A distinct blue color will indicate the presence of sufficient chlorine. Maintain the excess residual chlorine for 1 h while agitating; if necessary, add additional $Ca(OCl)_2$.

Add approximately 0.5 g of ascorbic acid to reduce the residual chlorine. Test with KI-starch paper; there should be no color. Again add approximately 0.5 g of ascorbic acid to ensure the presence of excess reducing agent. Both parts are analyzed for cyanides by the following procedure.

8.2.7.4 Analysis Procedure --

If cyanides in the sample are known to be less than 1 mg/liter (ppm), proceed as in the distillation procedure and the colorimetric method that follows. Use a 500 ml sample in the distillation. If cyanides are known to be more than 1 mg/liter (ppm) but less than 10 mg/liter (ppm), proceed as in the following distillation procedure and the modified Liebig titration using a 500 ml sample. If cyanides are suspected to be more than 10 mg/liter (ppm), use a smaller aliquot so that no more than 5 mg of cyanide are in the reaction vessel, and dilute to 500 ml. If cyanides are unknown, proceed as in the preceding sections.

1. Distillation

a) Set up the apparatus as shown in Figure 9.

b) Add 50 ml of NaOH solution to the absorber and dilute with a measured amount of water, if necessary, to obtain an adequate depth of liquid.

c) Introduce the 500-ml sample or diluted aliquot into the reaction flask through the side neck. Replace the stem and do not remove it until the distillation is entirely completed.

d) Turn on the suction and adjust it so that approximately one bubble of air per second enters the flask through the air stem. It is very important that this air flow be maintained throughout the reaction.

e) Add 50 ml of 50 percent v/v H_2SO_4 through the air inlet.

f) Pour 10 ml of Cu_2Cl_2 reagent into the air inlet and wash down with a stream of water.

g) Turn on cooling water and heat the contents of the flask at such a rate that a slow refluxing action occurs. Too rapid heating may release dissolved gases too fast and force them up the air inlet.

h) Continue refluxing for 1 hour, watching both the air flow and the reflux action. After 1 hour, turn off the heat but maintain the air flow.

i) After cooling for 15 minutes, transfer the absorption liquid to a separate container and carefully rinse the absorber and its connecting tubes into this container. (Caution. This liquid is highly toxic - avoid contact.) This liquid may either be analyzed separately or saved to combine with other portions. The former is recommended for unfamiliar samples.

j) Refill the absorber as in 2 and repeat the reflux as in 4 and 7 to 9.

k) If the sample contains readily hydrolyzed cyanides, most of these will be found in the absorber liquid from the first reflux. More stable complex cyanides require more time to hydrolyze. If these are present, there will be a significant yield from the second or even later refluxes, depending on the stability of the complexes present.

l) When the optimum time of reflux for a certain type of sample has been determined, the distillation can be continued for this length of time, thus eliminating multiple refluxes.

2. Colorimetric Method: Cyanides less than 1 mg/liter (ppm)

   a) From the standard KCN solution, prepare a series of 50 ml standards containing from 1 to 10 µg of cyanide. Treat the samples in accordance with steps c to f below.

   b) Prepare a calibration curve by plotting the absorbances of the standard samples against cyanide concentration in micrograms per 50 ml of solution.

   c) Judging from the calibration curve obtained in b above, prepare as in 1 samples above containing less than 1 and over 10 µg of cyanide to determine the limits of concentration measurable with the particular photometer being used.

   d) Take an aliquot of the absorption liquid obtained in Step 1-i above, so that its cyanide concentration falls in the measurable range found in c above.

   e) Place the aliquot of the absorption liquid in a 50 ml beaker. Place the tip of a 50 ml buret well below the level of the liquid and add the necessary volume of 10 percent v/v acetic acid as calculated from the formula: ml of 10 percent v/v acetic acid required to neutralize sample to pH 6.5 to 8.0.

   f) Transfer immediately to a 50 ml volumetric flask; add 0.2 ml of chloramine-T solution; stopper and mix by inversion two or three times. Allow 1 to 2 minutes for the reaction.

   g) Add 5 ml of the mixed pyridine-pyrazolone reagent; dilute to the mark with water; stopper and mix well by inversion and agitation. Allow 20 minutes for color development.

   h) Measure the absorbance of the developed color with the photometer at 620 nm.

   i) Using the calibration curve and the formula in the following calculations section, determine the cyanide concentration in the original sample.

3. Modified Liebig Titration: Cyanides Greater than 1 mg/liter (ppm)

   a) Obtain an aliquot of the absorption liquid calculated to contain between 1 and 5 mg of cyanide and dilute to a convenient volume for titration.

   b) Add 0.5 ml of rhodanine indicator.

c) Titrate with the standard silver nitrate solution to the first change in color from canary yellow to salmon pink.

d) Titrate a blank containing the same amount of alkali and water.

e) Record the results of the titrations and calculate the cyanide concentration in the original sample as in the modified Liebig titration.

4. Calculations

For the colorimetric procedure calculate the cyanide concentration as follows:

$$CN^-, \text{ mg/liter (ppm)} = (A \times B)/(C \times D)$$

where:

A = weight of cyanide, read from calibration curve, μg

B = volume of absorbing solution used in the distillation, ml

C = volume of original sample used in the distillation, ml

D = volume of aliquot of absorbing solution used, ml

For the modified Liebig titration calculate the cyanide concentration as follows:

$$CN^-, \text{ mg/liter (ppm)} = [(E - F) \times 1000]/C \times (B/D)$$

where:

E = volume of $AgNO_3$ solution required for titration of the aliquot, ml

F = volume of $AgNO_3$ solution required for titration of the blank, ml

C = volume of original sample used in the distillation, ml

B = total volume of absorbing solution used in the distillation, ml

D = volume of aliquot of absorbing solution used, ml

Calculate the concentration of cyanides amenable to chlorination as follows:

$$CN^-, \text{ mg/liter (ppm)} = G - H$$

where:

G = concentration of cyanide found in the unchlorinated portion of the sample, mg/ml (ppm)

H = concentration of cyanide found in the chlorinated portion of the sample, mg/ml (ppm)

8.2.8 Chloride Analysis - Mercuric Nitrate Titration

This method can be used to determine all concentrations of chloride ion in industrial water, provided intolerable interferences are absent. It is particularly useful for analysis of boiler water, boiler feedwater, distillate, condensate, and other relatively pure industrial waters where low chloride concentrations must be determined accurately.

Dilute mercuric nitrate solution is added to an acidified sample in the presence of mixed diphenylcarbazone-bromophenol blue indicator. The end point of the titration is the formation of the blue-violet mercury diphenylcarbazone complex.

The anions and cations generally found in industrial water offer no interference. Zinc, lead, nickel, and ferrous and chromous ions affect solution and end-point colors, but do not reduce the accuracy of the titration when present in concentrations up to 100 ppm. Copper is tolerable up to 50 ppm. Titration in the presence of chromate ion requires indicator with extra background color (alphazurine) and prior reduction for concentrations above 100 ppm. Ferric ion (at concentrations higher than 10 ppm) must be reduced before titration, and sulfite ion must be oxidized. A part of bromide ion and fluoride ion will be titrated with the chloride. Quanternary ammonium salts also interfere if present in significant amounts (1 to 2 ppm). Deep color also may interfere.

8.2.8.1 Apparatus and Reagents --

- Microburet, 1-ml or 5-ml, with 0.01-ml graduation intervals.

- Hydrogen peroxide (reagent grade) 30 percent w/w H_2O_2.

- Hydroquinone solution (10 mg/ml). Dissolve 1 g of purified hydroquinone in water and dilute to 100 ml.

- Mercuric nitrate, standard solution (0.025 N). Dissolve 4.2830 g mercuric nitrate ($Hg(NO_3)_2 \cdot H_2O$) in 50 ml water acidified with 0.5 ml concentrated nitric acid (HNO_3, sp gr 1.42). Dilute the acidified $Hg(NO_3)_2$ solution with water to 1 liter. Filter if necessary, and standardize against the standard NaCl solution, using the procedure described in Section 8.2.8.1.[9]

- Mercuric nitrate, Standard Solution (0.0141N). Dissolve 2.4200 g of $Hg(NO_3)_2 \cdot H_2O$ in 25 ml water acidified with 0.25 ml concentrated HNO_3 (sp gr 1.42). Dilute the acidified $Hg(NO_3)_2$ solution with water to 1 liter. Filter the solution, if necessary, and standardize against the standard NaCl solution. (Section 8.2.8.1)

- Mixed indicator solution. Dissolve 0.5 g of crystalline diphenylcarbazone and 0.05 g of bromophenol blue powder in 75 ml of ethyl alcohol (95% v/v), and dilute to 100 ml with the alcohol.[10] Store in a brown bottle and discard after 6 months.[11]

---

[9] The end point, while sharp, can be improved somewhat for certain types of water by adding to the titration sample several drops of a 0.05-g/liter solution of xylene cyanole FF or alphazurine blue-green dye (color index 714). These chemicals can be mixed with the indicator in the same proportions.

[10] Denatured alcohol is not suitable. Methanol or isopropanol may be used if pure ethyl alcohol is not available.

[11] Liquid indicator generally deteriorates to the point that it yields no end-point color after 12 to 18 months of storage. High temperature (above 37.8°C (100°F)) and exposure to bright light may shorten storage life. A dry powder mixture of the two indicator ingredients is stable for much longer periods. Both the powder mixture (capsule form) and the liquid indicator are available commercially.

- Nitric acid (0.3% v/v). Mix volumes of concentrated nitric acid (HNO_3 sp gr 1.42) with 997 volumes of water.

- pH indicating paper. Long-range type, covering a pH range 1 to 11.

- Sodium chloride, standard solution (0.025 N). Dry several grams of sodium chloride (NaCl) for 1 hour at 600°C. Dissolve 1.4613 ±0.0002 g of the dry salt in water and dilute to 1 liter at 20°C in a volumetric flask.

- Sodium hydroxide solution (10 g/liter). Dissolve 10 g of sodium hydroxide (NaOH) in water and dilute to 1 liter.

8.2.8.2 Analysis Procedure --

Use a volume of sample that will contain not more than 20 mg of chloride ion, diluting the sample with water to approximately 50 ml volume if necessary. If the volume of sample contains less than 2.5 mg chloride ion, make the final titration with 0.0141 N $Hg(NO_3)_2$ solution, using a 1 or 5-ml microburet. In this latter case, determine an indicator blank on 50 ml of chloride-free water, applying the same procedure followed for the sample. If the sample contains less than 0.1 ppm chloride, concentrate an appropriate volume of sample to 50 ml.

Add 5 to 10 drops of mixed indicator solution and shake or swirl the flask. If a blue-violet or red color develops, add 0.3 percent HNO_3 dropwise until the color changes to yellow. Add 1 ml of excess acid. If a yellow or orange color forms immediately on addition of the mixed indicator, add NaOH solution dropwise until the color changes to yellow, then add 1 ml excess of acid.[12]

[12] The prescribed acidification provides a satisfactory pH range of 3.0 to 3.5. Acidified samples on which electrometric pH measurements have been made shall not be used for chloride determinations, because the use of the calomel reference electrode may introduce error due to chloride contamination. For precise pH adjustment of samples having a low chloride contamination, instrumental measurements may be made on one sample aliquot to determine treatment needed for another to be used for the chloride test.

Titrate the solution with 0.025 N $Hg(NO_3)_2$ solution until a blue-violet color, as viewed by transmitted light, persists throughout the solution.[13] Record the milliliters of $Hg(NO_3)_2$ solution added.

If chromate ion is present in the absence of iron and in concentration less than 100 ppm, use the alphazurine modified mixed indicator and acidify the sample as described above but to pH 3 as indicated by pH indicating paper. Titrate the solution as described above, but to an olive-purple end point.

If chromate ion is present in the absence of iron and in concentration greater than 100 ppm, add 2 ml fresh hydroquinone solution and titrate the solution as described above.

If ferric ion is present in the absence of chromate ion, use a sample of such volume as to contain no more than 2.5 mg ferric ion or ferric ion plus chromate ion. Add 2 ml fresh hydroquinone solution, and acidify the sample and titrate the solution as described above.

If sulfate ion is present, add 0.5 ml of H_2O_2 to 50 ml of the sample in the Erlenmeyer flask and mix for 1 min. Then, acidify the sample and titrate the solutions as described above.

8.2.8.3 Calculation --

Calculate the chloride ion concentration, in milligrams per liter, in the original sample as follows:

$$\text{Chloride, mg/liter (ppm)} = [(V_1 - V_2) \times N \times 35,500]/S$$

[13] The use of indicator modifications and the presence of heavy metal ions can change solution colors without affecting the accuracy of the determination. For example, solutions containing alphazurine may be bright blue when neutral, grayish purple when basic, blue-green when acidic, and blue violet at the chloride end point. Solutions containing about 100 ppm nickel ion and normal mixed indicator are purple when neutral, green when acid, and gray at the chloride end point. When applying this method to samples that contain colored ions or that require modified indicators, it is recommended that the operator familiarize himself with the specific color changes involved by experimenting with solutions prepared as standards for comparison of color effects.

where:

V_1 = milliliters of standard $Hg(NO_3)_2$ solution required for titration of the sample

V_2 = milliliters of standard $Hg(NO_3)_2$ solution required for titration of the blank

N = normality of the $Hg(NO_3)_2$ solution

S = milliliters of sample used.

8.2.9 Chloride-Silver Nitrate Potentiometric Method

Chloride is determined by potentiometric titration with silver nitrate solution using a glass and silver-silver chloride electrode system. During titration an electronic voltmeter is used to detect the change in potential between the two electrodes. The end point of the titration is that instrument reading at which the greatest change in voltage has occurred for a small and constant increment of silver nitrate added.

Iodide and bromide also are titrated as chloride. Ferricyanide causes high results and must be removed. Chromate and dichromate interfere and should be reduced to the chromic state or removed. Ferric iron interferes if present in an amount substantially higher than the amount of chloride. Chromic ion, ferrous iron, and phosphate do not interfere.

Grossly contaminated samples usually require pretreatment. Where contamination is minor, some contaminants can be destroyed simply by the addition of nitric acid.

8.2.9.1 Apparatus and Reagents --

- Glass and silver-silver chloride electrodes. The latter is a silver electrode coated with silver chloride and may be prepared in the laboratory if desired, but can be purchased for use with specified instruments. Instructions on the use and care of the electrodes are supplied by the manufacturer.

- Electronic voltmeter, to measure the potential difference between the electrodes. Many laboratories find it possible to convert a pH meter to this use by substituting the appropriate electrode.

- Mechanical stirrer, with plastic-coated or glass impeller.

- Standard sodium chloride solution, 0.014N. Dissolve 8.243 g NaCl, dried at 105°C (221°F), in distilled water and dilute to exactly 500 ml. Dilute to 50.0 ml of this solution to exactly 1000 ml. The final solution contains 0.500 mg Cl per 1.00 ml (500 ppm).

- Nitric acid, concentrated.

- Silver nitrate titrant, 0.014N. Dissolve 2.38 g $AgNO_3$ in distilled water and dilute to 1000 ml. Standardize this solution by titrating exactly 10.0 ml standard NaCl solution using the standardization procedure below. Calculate the normality of the $AgNO_3$ solution as follows:

$$\text{Normality of } AgNO_3 = \frac{10.0 \times 0.0141}{V}$$

V = ml $AgNO_3$

- Special reagents for pretreatment:

  1) Sulfuric acid, 1 + 1.

  2) Hydrogen peroxide, 30 percent.

  3) Sodium hydroxide, 1 N.

8.2.9.2 Standardization Procedure --

a) Inasmuch as the various instruments that can be used in this determination differ in operating details, the manufacturer's instructions should be followed. Necessary mechanical adjustments should be made. Then, after allowing sufficient time for warm-up (10 min), the internal electrical components are balanced to give an instrument setting of 0 mV or, if a pH meter is used, a pH reading of 7.0.

b) Place 10.0 ml standard NaCl solution in a 250-ml beaker, dilute to about 100 ml, and add 2.0 ml conc HNO_3. Immerse the stirrer and the electrodes in the solution.

c) Set the instrument to the desired range of millivolts or pH units. Start the stirrer.

d) Add $AgNO_3$ titrant, recording the scale reading after each addition. At the start, large increments of $AgNO_3$ can be

added; then, as the end point of the reaction is approached, smaller and equal increments (0.1 or 0.2 ml) should be added at longer intervals, so the exact end point can be determined. Determine the volume of $AgNO_3$ used at the point at which there is the greatest change in instrument reading per unit addition of $AgNO_3$.

e) A differential titration curve should be plotted if the exact end point cannot be determined by inspection of the data. Plot the change in instrument reading for equal increments of $AgNO_3$ against the volume of $AgNO_3$ added, using the average of the buret readings before and after each addition. The procedure is illustrated in Figure 10. Calculate the normality of the $AgNO_3$ using the following equation:

$$N_{Ag} = \frac{N_{Cl}\ V_{Cl}}{V_{Ag}}$$

where:

N_{Cl} = Normality of $NaCl^-$ solution

V_{Cl} = Volume of NaCl aliquot titrated

V_{Ag} = Volume of $AgNO_3$ used to titrate standard NaCl solution

8.2.9.3 Analysis Procedure --

a) Pipet exactly 100.0 ml of sample, or an aliquot containing not more than 10 mg chloride, into a 250-ml beaker. In the absence of interfering substances, proceed with Step c below.

b) In the presence of organic compounds, sulfite, or other interferences (such as large amounts of ferric iron or substantial amounts of cyanide or sulfide), acidify the sample with H_2SO_4, using litmus paper. Boil for 5 minutes to remove volatile compounds. Add more H_2SO_4, if necessary, to keep the solution acidic. Add 3 ml H_2O_2 and boil for 15 minutes adding chloride-free distilled water to keep the volume above 50 ml. Dilute to 100 ml, add NaOH solution dropwise until alkaline to litmus, then 10 drops in excess. Boil for 5 minutes, filter into a 250-ml beaker, and wash the precipitate and paper several times with hot distilled water.

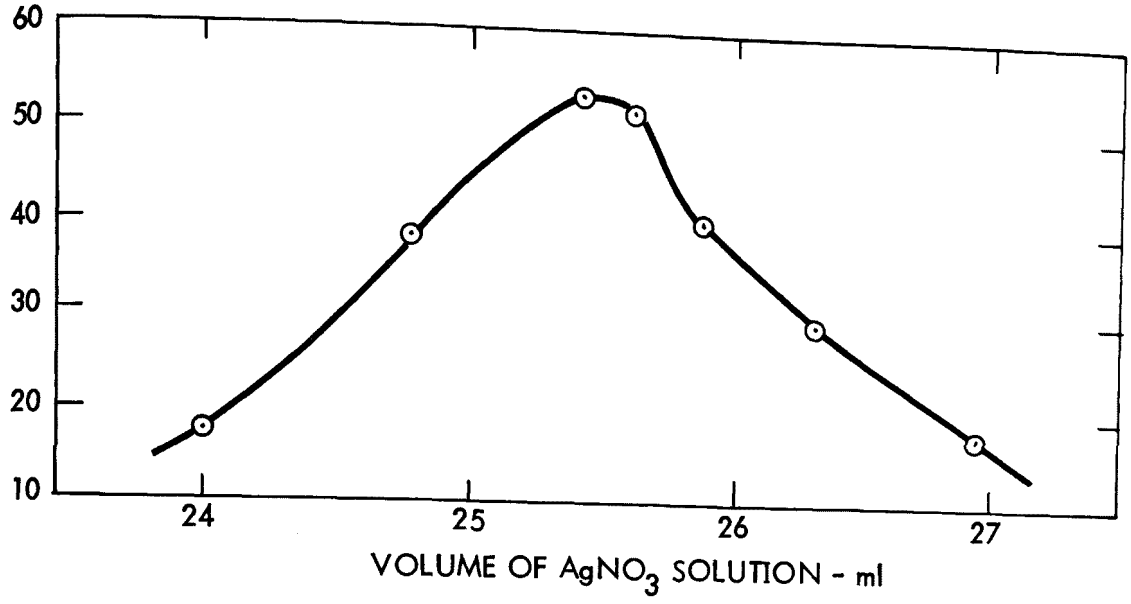

EXPERIMENTAL DATA PLOTTED ABOVE

VOLUME, ml	23.50	24.50	25.00	25.25	25.50	25.75	26.00	26.50	27.50
CHANGE, mV / ml	18	36	48	52	52	40	32	18	

Figure 10. Example of differential titration curve (end point is 25.5 ml).

c) Add concentrated HNO_3 dropwise until acidic to litmus paper, then 2.0 ml in excess. Cool and dilute to 100 ml if necessary. Immerse the stirrer and the electrodes in the sample and start the stirrer. After making the necessary adjustments of the instrument according to the manufacturer's instructions, set the selector switch to the appropriate setting for measuring the difference of potential between the electrodes.

d) Complete the determination by titrating according to Step d, Section 8.2.9.1. If an end-point reading has been established from previous determinations for similar samples and conditions, this predetermined end point can be used. For the most accurate work, a blank titration should be made by carrying chloride-free distilled water through the procedure.

8.2.9.4 Calculation --

$$\text{ppm Cl} = \frac{(A - B \times N \times 35.45 \times 1000)}{D}$$

where A = ml $AgNO_3$, B = ml blank, N = normality of titrant, and D = ml sample.

8.2.10 Chloride-Colorimetric Method

This method can be applied to waters containing chloride ion in concentrations from 0.02 to 10 ppm. It is particularly useful for analysis of boiler water, boiler feedwaters, distillate, condensate, and other relatively pure industrial waters where low chloride concentrations must be determined accurately.

Solutions of ferric ammonium sulfate and mercuric thiocyanate are added to the sample. The chloride ion reacts with the mercuric thiocyanate to produce thiocyanate ion which in turn combines with ferric ion to form red ferric thiocyanate. The intensity of the color, which is proportional to the concentration of the chloride ion, is measured photometrically at a wavelength of 463 nm, or by visual comparison with standard solutions.

Bromides, iodides, cyanides, thiosulfates, and nitrates interfere in this method. Color, if present in the sample, will interfere with visual comparison and, depending on its spectral absorbance, may interfere with the photometric measurement.

8.2.10.1 Apparatus and Reagents --

- Nessler tubes or photometer. A set of 50-ml matched Nessler tubes or a photometer suitable for measurements at a wavelength of 463 nm may be used for evaluating the intensity of the color produced. The optimum range of concentrations for some typical methods of color measurement is shown in Table 11.

TABLE 11. CONCENTRATION RANGES FOR COLOR MEASUREMENT

Method of Color Measurement	Optimum Range, mg of chloride ion per 25-ml water sample
Nessler tubes, 300 mm	0.005 to 0.25
Filter photometer, blue filter, 425 nm, 2.3-cm cell	0.003 to 0.25
Spectrophotometer, 463 nm:	
1.0-cm cell	0.005 to 0.25
10-cm cell	0.0005 to 0.05

- Ferric ammonium sulfate solution (5% w/v). Dissolve 5.0 g of ferrous ammonium sulfate ($Fe(NH_4)_2(SO_4)_2 \cdot 6H_2O$) in 20 ml of water. Add 38 ml concentrated nitric acid (HNO_3 sp gr 1.42) and boil to oxidize the iron and remove the oxides of nitrogen. Dilute to 100 ml with halide-free water.

- Mercuric thiocyanate, methanol solution (0.3% w/v). Dissolve 0.30 g mercuric thiocyanate ($Hg(CNS)_2$) in 100 ml methanol. Store in amber bottles. Allow to stand for at least 24 hours before using. (Caution: Mercuric salts are very poisonous. Due precautions should be observed when using this material.) Do not use if more than 4 weeks old.[14]

- Sodium chloride, standard solution (10 ppm). Dry several grams of sodium chloride (NaCl) for 1 hour at 600°C (1112°F). Prepare a stock solution by dissolving exactly 1.649 g of the dry salt in water and dilute to 1 liter. Prepare the standard solution as needed by diluting 10 ml of the stock solution to 1 liter with halide-free water. The resulting standard contains 10 mg of chloride ion per liter.

[14] A slight precipitate may form and settle out after 24 hours. Care must be taken so this precipitate is not resuspended when using the reagent. Only the clear, supernatant liquid must be used.

8.2.10.2 Analysis Procedure --

1. Sampling

Since chloride ion is a very common contaminant, extreme care must be exercised in the collection and processing of the sample. Soak all new glassware in hot nitric acid (5% v/v) for several hours. To be certain that new glassware is conditioned for the test, run a chloride determination on halide-free water. After the run rinse the glassware thoroughly. Soak the glassware in halide-free water between tests. Discard all glassware that appears etched or scratched.

2. Calibration

Prepare a series of reference standards by diluting suitable volumes of the standard chloride solution with halide-free water. The series should cover the optimum range of the selected method of color measurement described in Table 10. The temperature of the solutions used for calibration must be the same as that of the sample to be tested.

Treat each reference standard as described in the procedures below.

Prepare a calibration curve by plotting the readings on the photometer versus the concentration of chlorides. When the scale of the photometer reads directly in absorbance, plot the curve on rectilinear paper. When the scale reads in transmittance, it is convenient to plot the results on semilog paper, using the single cycle log axis to plot transmittance and the linear axis to plot the concentrations.

3. Methodology

Transfer 25 ml of sample to a glass-stoppered cylinder and add successively 5 ml ferric ammonium sulfate solution and 2.5 ml mercuric thiocyanate solution. Mix thoroughly and allow to stand for 10 minutes.

Measure the intensity of the color formed either by comparison with suitable reference standards in Nessler tubes or by a photometer chosen to cover the desired range as indicated in Table 11. Adjust the zero setting of the photometer by using 25 ml halide-free water.

4. Calculation

Determine the ppm concentration of chloride ion in the sample either by direct visual comparison with reference standards or by use of a suitable calibration curve.

$$\text{Chloride, mg/liter (ppm)} = 40A$$

where A = milligrams of chloride ion in the sample.

8.2.11 Nitrate-Brucine Method

The reaction between nitrate and brucine produces a yellow color which can be used for the colorimetric estimation of nitrate. The intensity of the color is measured at 410 nm. The reaction rate between brucine and nitrate ion is affected significantly by the amount of heat generated during the test. Thus the procedure seeks heat control by reagent addition sequence and incubation of the reaction mixture for a precise interval of time at a known temperature. Acid concentration and reaction time have been selected to yield optimum development and stability of color. The method works well in waters of salinities varying from that of fresh water to that of sea water. The method is recommended for the approximate range of 0.1 to 2 ppm NO_3^- nitrogen.

All strong oxidizing or reducing agents interfere. The interference by residual chlorine can be eliminated by the addition of sodium arsenite, provided that the residual chlorine does not exceed 5 ppm. A slight excess of sodium arsenite will not affect the determination. Ferrous and ferric iron and quadrivalent manganese give slight positive interferences, but in concentrations less than 1 ppm these are negligible. The interference due to nitrite up to 0.5 ppm NO_2^- nitrogen is eliminated by the use of sulfanilic acid. Chloride interference is masked by the addition of excess NaCl.

High concentrations of organic matter such as in undiluted raw wastewater will usually interfere.

8.2.11.1 Apparatus and Reagents --

- Colorimetric equipment: One of the following is required: Spectrophotometer, for use at 410 nm providing a light path of 1 cm, or filter photometer, providing a light path of 1 cm and equipped with a violet filter having maximum transmittance between 400 and 425 nm.

- Safety pipet.

- Wire racks, to hold tubes in which samples are to be incubated (Van Waters and Rogers No. 60935 or equivalent).

- Stirred boiling water bath, with heating facility sufficient to maintain a temperature of at least 95°C (203°F) when cooled samples are introduced.

- Reaction tubes. Hard-glass test tubes, of approximate dimensions 2.5 x 15 cm, in which reaction is performed. [The 1-cm, colorimeter tubes (Van Waters and Rogers No. 22366) used in conjunction with the Bausch & Lomb Spectronic 20 or equivalent are convenient, since their use avoids the necessity for a transfer, following reaction, to determine transmittance.]

- Stock nitrate solution. Dissolve 721.8 mg anhydrous potassium nitrate, KNO_3, and dilute to 1000 ml with distilled water. This solution contains 100 mg/l N, (100 ppm).

- Standard nitrate solution. Dilute 10.00 ml stock nitrate solution to 1000 ml with distilled water; 1.00 ml = 1.00 μg N (1 ppm). Prepare immediately prior to using.

- Sodium arsenite solution (0.5% w/v). Dissolve 5.0 g $NaAsO_2$ and dilute to 1 liter with distilled water. (Caution: Toxic — take care to avoid ingestion.)

- Brucine-sulfanilic acid solution: Dissolve 1 g brucine sulfate and 0.1 g sulfanilic acid in approximately 70 ml hot distilled water. Add 3 ml conc HCl, cool, and make up to 100 ml. This solution is stable for several months. The pink color that develops slowly does not affect its usefulness. (Caution: Brucine is toxic — take care to avoid ingestion.)

- Sulfuric acid solution. Carefully add 500 ml conc H_2SO_4 to 125 ml distilled water. Cool to room temperature before using and keep tightly stoppered to prevent absorption of atmospheric moisture.

- Sodium chloride solution (30% w/v). Dissolve 300 g NaCl and dilute to 1000 ml with distilled water.

8.2.11.2 Analysis Procedure --

1. Preparation of nitrate standards - Prepare nitrate standards in the range 0.1-1 ppm N by diluting 1.00, 2.00, 4.00, 7.00, and 10.0 ml standard nitrate solution to 10.0 ml with distilled water.

2. Pretreatment of sample - If the sample contains residual chlorine, remove by adding one drop (0.05 ml) sodium arsenite solution for each 0.10 mg Cl and mix. Add one drop in excess to a 50-ml portion.

3. Color development - Set up the required number of reaction tubes in the wire rack, spacing them so each tube is surrounded by empty spaces. Include a reaction tube for a reagent blank and reaction tubes for as many standards as desired. To each tube add 10.0 ml sample or an aliquot diluted to 10 ml so that the sample volume taken for analysis contains between 0.1 and 8 μg NO_3^- nitrogen. Place the rack in a cool water bath and add 2 ml NaCl solution. Mix thoroughly, swirling by hand, and add 10 ml H_2SO_4 solution. In no case use a "Vortex" mixer, since this type of mixing produces inconsistent results in the analysis. Mix again thoroughly by swirling and allow to cool. At this point, if any turbidity or color is present or if optically unmatched colorimeter tubes are being used as reaction tubes, dry the tubes and read a "sample blank" value against the reagent blank tube at 410 nm. Replace the rack of tubes in the cool water bath and add 0.5 ml brucine-sulfanilic acid reagent. Swirl the tubes to mix thoroughly and then place the rack of tubes in a well-stirred boiling water bath that maintains a temperature of not less than 95°C (203°F). After exactly 20 minutes, remove the samples and immerse them in a cold water bath. When thermal equilibrium is reached (at approximately room temperature), dry off the tubes with tissue and read the standards and samples against the reagent blank at 410 nm in the spectrophotometer. Check the technique and the constancy of reaction condition by running at least two standards with each batch of samples.

To obtain a standard curve, subtract the "sample blanks" from the final absorbance readings and plot the resultant absorbance against ppm NO_3^- nitrogen. Correct the absorbance readings of the samples by subtracting their sample blank values from their final absorbance values. Read the concentrations of NO_3^- nitrogen directly from the standard curve.

4. Calculation

$$\text{ppm nitrate N} = \frac{\mu g\ NO_3^-\ \text{nitrogen}}{\text{ml sample}}$$

$$\text{ppm } NO_3 = \text{ppm nitrate N} \times 4.43$$

8.2.12 Nitrate-Phenoldisulfonic Acid Method

The yellow color produced by the reaction between nitrate and phenoldisulfonic acid obeys Beer's law up to at least 12 ppm N at a wavelength of 480 nm when a light path of 1 cm is used. At a wavelength of 410 nm, the point of maximum absorption, determinations can be made up to 2 ppm with the same cell path.

As even small concentrations of chloride result in nitrate losses using this method, it is important that the chloride content be reduced to a minimum, preferably below 10 ppm. However, the silver sulfate used for this purpose presents problems with some water samples because of the incomplete precipitation of silver ion, which produces an off color or turbidity when the final color is developed. The preferred alkali for color development in the final stage of the determination is ammonium hydroxide, particularly where chloride removal must be practiced on the sample. Potassium hydroxide should be used only if ammonia fumes must be reduced to a minimum in the laboratory atmosphere (for example, when trace amounts of ammonia nitrogen are being determined concurrently). A faint tinge of brown is imparted by potassium hydroxide to the final color when a silver compound has been previously applied for chloride precipitation. Nitrite levels in excess of 0.2 ppm N erratically increase the apparent nitrate concentration. Colored ions and materials physically modifying the color system should be absent.

In the absence of interference, the phenoldisulfonic acid method is sensitive to 1 μg nitrate nitrogen, which represents 10 ppb in a 100-ml sample.

8.2.12.1 Apparatus and Reagents --

- Colorimetric Equipment — One of the following is required: spectrophotometer, for use at 410 nm, providing a tight path of 1 cm or longer; filter photometer, providing a light path of 1 cm or longer and equipped with a violet filter having a maximum transmittance near 410 nm; Nessler tubes, matched, 50- or 100-ml.

Prepare all reagents from chemicals which are white in color and store all solutions in pyrex containers.

- Standard silver sulfate solution. Dissolve 4.40 g Ag_2SO_4, free from nitrate, in distilled water and dilute to 1.0 liter; 1.00 ml is equivalent to 1.00 mg Cl.

- Phenoldisulfonic acid reagent. Dissolve 25 g pure white phenol in 150 ml conc H_2SO_4. Add 75 ml fuming H_2SO_4 (15% free SO_3), stir well, and heat for 2 hours on a hot water bath.

- Ammonium hydroxide. If this cannot be used, prepare 12 N potassium hydroxide solution by dissolving 673 g KOH in distilled water and diluting to 1 liter.

- EDTA reagent. Rub 50 g disodium ethylenediamine tetra-acetate dihydrate, also called (ethylenedinitrilo)-tetraacetic acid sodium salt, with 20 ml distilled water to form a thoroughly wetted paste. Add 60 ml conc NH_4OH and mix well to dissolve the paste.

- Stock nitrate solution. Dissolve 721.8 mg anhydrous potassium nitrate, KNO_3, and dilute to 1000 ml with distilled water. This solution contains 100 ppm N.

- Standard nitrate solution. Evaporate 50.0 ml stock nitrate solution to dryness on a steam or hot water bath; dissolve the residue by rubbing with 2.0 ml phenoldisulfonic acid reagent, and dilute to 500 ml with distilled water; 1.00 ml = 10.0 μg N = 44.3 μg NO_3.

- Reagents for Treatment of Unusual Interference:

1) Aluminum hydroxide suspension. Dissolve 125 g aluminum potassium or ammonium sulfate, $AlK(SO_4)_2 \cdot 12\ H_2O$ or $AlNH_4(SO_4)_2 \cdot 12\ H_2O$ in 1 liter distilled water. Warm to 60°C (140°F) and add 55 ml conc NH_4OH slowly, with stirring. After permitting the mixture to stand about 1 hour, transfer to a large bottle and wash the precipitate by successive additions (with thorough mixing) and decantations of distilled water, until free from ammonia, chloride, nitrate, and nitrite. Finally, after settling, decant off as much clear liquid as possible, leaving only the concentrated suspension.

2) Sulfuric Acid, 1 N.

3) Potassium permanganate, 0.1 N. Dissolve 316 mg $KMnO_4$ in distilled water and dilute to 100 ml.

4) Dilute hydrogen peroxide solution. Dilute 10 ml of 30% hydrogen peroxide (low in nitrate) to 100 ml with distilled water.

5) Sodium hydroxide, 1 N.

8.2.12.2 Analysis Procedure --

a. Color Removal - If the sample is colored, decolorize by adding 3 ml aluminum hydroxide suspension to 150 ml of sample. Stir very thoroughly and allow to stand for a few minutes, then filter, discarding the first portion of the filtrate.

b. Nitrite Conversion - To 100 ml of sample add 1 ml of H_2SO_4 and stir. Add dropwise, with stirring, either $KMnO_4$ or H_2O_2 solution. Let the treated sample stand for 15 minutes to complete the conversion of nitrite to nitrate. (A faint pink color persists for at least 15 minutes when sufficient $KMnO_4$ is used.)

c. Chloride Removal - Determine the chloride content of the water and treat 100 ml of sample with an equivalent amount of standard silver sulfate solution. Remove the precipitated chloride either by centrifugation or by filtration, coagulating the silver chloride by heat if necessary. (Excellent removal of silver chloride can be achieved by allowing the treated sample to stand overnight at laboratory temperature away from strong light. This approach applies to samples free of contamination by nitrifying organism.)

d. Evaporation and Color Development - Neutralize the clarified sample to approximately pH 7, transfer to a casserole, and evaporate to dryness over a hot water bath. Using a glass rod, rub the residue thoroughly with 2.0 ml phenoldisulfonic acid reagent to ensure dissolution of all solids. If necessary, heat mildly on the hot water bath a short time to dissolve the entire residue. Dilute with 20 ml distilled water and add, with stirring, about 6 to 7 ml NH_4OH or about 5 to 6 ml KOH until maximum color is developed. Remove any resulting flocculent hydroxides by passing through a filter paper or filtering crucible, or add the EDTA reagent dropwise, with stirring, until the turbidity redissolves. Transfer the filtrate or clear solution to a 50- or 100-ml volumetric flask or Nessler tube, dilute to the mark, and mix.

e. Photometric Measurement - Make photometric readings in cells with a 1-cm or longer light path at a wavelength of 410 nm, or with violet filters exhibiting maximum transmittance in the range from 400 to 425 nm. If available, use a 5-cm light path for measurements in the nitrogen interval from 5 to 50 μg, and a 1-cm light path in a proportionate range. Make readings against a blank prepared from the same volumes of phenoldisulfonic acid reagent and NH_4OH or KOH as used for the samples.

f. Visual Comparison - In the case of 50-ml Nessler tubes, use the following volumes of standard nitrate solution: 0, 0.1, 0.3, 0.5, 0.7, 1.0, 1.5, 2.0, 3.5, 6.0, 10, 15, 20, and 30 ml. Where it is more convenient to use a total volume of 100 ml, double the volumes of standard solution. To each of these standards add 2.0 ml phenoldisulfonic acid reagent and the same volume of the same alkali as is used in preparation of the sample. These standards can be kept several weeks without deterioration.

g. Calculation

$$\text{ppm nitrate N} = \frac{\mu\text{g nitrate N}}{\text{ml sample}}$$

$$\text{ppm } NO_3 = \text{ppm nitrate N} \times 4.43$$

8.2.13 Antimony Analysis

Pentavalent Sb in aqueous HCl solution reacts with Rhodamine B to form a colored complex extractable with organic solvents. Intensity of extracted color is measured spectrophotometrically at 565 nm.

The following reagents are required:

- Hydrochloric acid solution. 6 N, dilute concentrated acid with H_2O (1 + 1).
- Dilute phosphoric acid. 3 N, dilute 70 ml H_3PO_4 (85 percent) to 1 L with H_2O.
- Rhodamine B solution. 0.02 percent w/v in H_2O.
- Antimony standard solutions. (1) Stock solution = 100 ppm. Dissolve 0.1000 g pure Sb in 25 ml H_2SO_4 with heat; cool, and cautiously dilute to 1 L with H_2O. (2) Working solution = 1 ppm. Dilute 2.0 ml stock solution to 200 ml with H_2O.

Cool hydrochloric acid, phosphoric acid, antimony reagents and approximately 100 ml benzene, and eight 125 ml separators with Teflon stopcocks in refrigerator before use; maintain temperature of 5 to 10°C (41 to 50°F) during extraction and color development. Work in subdued light.

8.2.13.1 Analysis Procedure --

Digest sample using H_2SO_4-HNO_3 or HCl-HNO_3 (5 ml of each acid). Oxidizing conditions must be maintained.

Transfer digest or aliquot to 125 ml glass stoppered Erlenmeyer; add enough H_2SO_4 to make total of 5 ml H_2SO_4, and evaporate until white fumes of SO_3 are driven off. Cool flask, add 10 drops 70 percent $HClO_4$, and again evaporate to white fumes.[15] Cool digest in ice bath $\geq$30 minutes, then slowly add 5 ml precooled 6N HCl by pipet. Let stand in ice bath 15 minutes, then add 8 ml precooled 3N H_3PO_4. (Until color is extracted into benzene, perform subsequent operations as quickly as possible. Color is stable in benzene for several hours.) Immediately add 5 ml precooled Rhodamine B solution, stopper, and shake vigorously. Transfer to precooled 125 ml separator.

---

[15]Under no circumstances should the sample be evaporated to dryness once the HCO_4 has been added. Perform $HC\ell O_4$ digestion in a hood especially set aside for $HC\ell O_4$ that is free of organic material in the vent system and set aside for $HC\ell O_4$ titrations.

Pipet 10 ml precooled benzene into separator, shake vigorously 1 minute, and discard aqueous layer. Transfer benzene layer (red if Sb is present) into test tube and let H_2O settle. Rinse 1 cm cell with extract, fill cell, and read at 565 nm against benzene blank taken through entire detection. Refer readings to standard curve.

8.2.13.2 Standardization Procedure --

Pipet 0, 2, 4, 6, 8, and 10 ml Sb working standard solution into 125-ml glass stoppered Erlenmeyers; add 5 ml H_2SO_4 to each, and proceed as in determination. Plot absorbance against µg Sb.

8.2.14 Selenium Analysis

Selenium has a toxic effect on man and animals comparable with that of arsenic, giving rise to similar symptoms. Selenium has also been suspected of causing dental caries in man, and has been cited as a potential carcinogenic agent.

The selenium concentration of most drinking waters falls below 10 µg/l. Concentrations exceeding 500 µg/l are rare and limited to seepage from seleniferous soils. The sudden appearance of selenium in a water supply might indicate industrial pollution. Little is known regarding the valence state of selenium in natural waters, but because selenate and selenite are both found in soils, it is reasonable to expect that both may be present in seleniferous water. Water contaminated with wastes may contain selenium in any of its four valence states. Many organic compounds of selenium are known.

This procedure is based on the evolution of Se from the sample as its hydride. The hydride is then passed into a H_2-Ar flame of an AAS where the Se is quantified.

8.2.14.1 Apparatus and Reagents --

- Flow meter, capable of measuring 1 l/min, such as that used for auxiliary argon.
- Medicine dropper, capable of delivering 1.5 ml, fitted into a size "0" rubber stopper.
- Reaction flask, a pear-shaped vessel with side arm and 50 ml capacity, both arms having 14/20 joint.

- Special gas inlet-outlet tube, constructed from a micro coldfinger condenser by cutting off the portion below the 14/20 ground glass joint.

- Magnetic stirrer, strong enough to homogenize the zinc slurry described in paragraph 8.2.14.2 below.

- Drying tube, 100-mm-long polyethylene tube filled with glass wool to keep particulate matter out of the burner.

- Stannous chloride solution. Dissolve 100 g $SnCl_2$ in 100 ml conc HCl.

- Zinc slurry. Add 50 g zinc metal dust (200 mesh) to 100 ml deionized distilled water.

- Diluent. Add 100 ml 18N H_2SO_4 and 400 ml conc HCl to 400 ml deionized distilled water in a 1-l volumetric flask and bring to volume with deionized distilled water.

- Stock selenium solutions. Dissolve 1.000 g selenium in 5 ml conc HNO_3. Warm until the reaction is complete and cautiously evaporate just to dryness. Dilute to 1,000 ml with high purity water. This solution contains 1 mg Se/ml.

- Intermediate selenium solution. Pipet 1 ml of the stock selenium solution into a 100 ml volumetric flask and bring to volume with high purity water containing 1.5 ml of concentrated HNO_3/ℓ. This solution will contain 10 μg of Se in each milliliter.

- Standard selenium solution. Pipet 10 ml intermediate selenium solution into a 100-ml volumetric flask and bring to volume with high purity water containing 1.5 ml conc HNO_3/ℓ. This solution contains 1 μg of Se in each milliter.

- Perchloric acid, 70 to 72% $HClO_4$.

8.2.14.2 Procedure --

1. Apparatus setup. (Refer to Figure 11.) Connect the apparatus with the burner of the spectrophotometer as shown in Figure 11. Connect the outlet of the reaction vessel to the auxiliary oxidant input of the burner with Tygon tubing. Connect the inlet of the reaction vessel to the outlet side of the auxiliary oxidant (argon supply) control valve of the instrument.

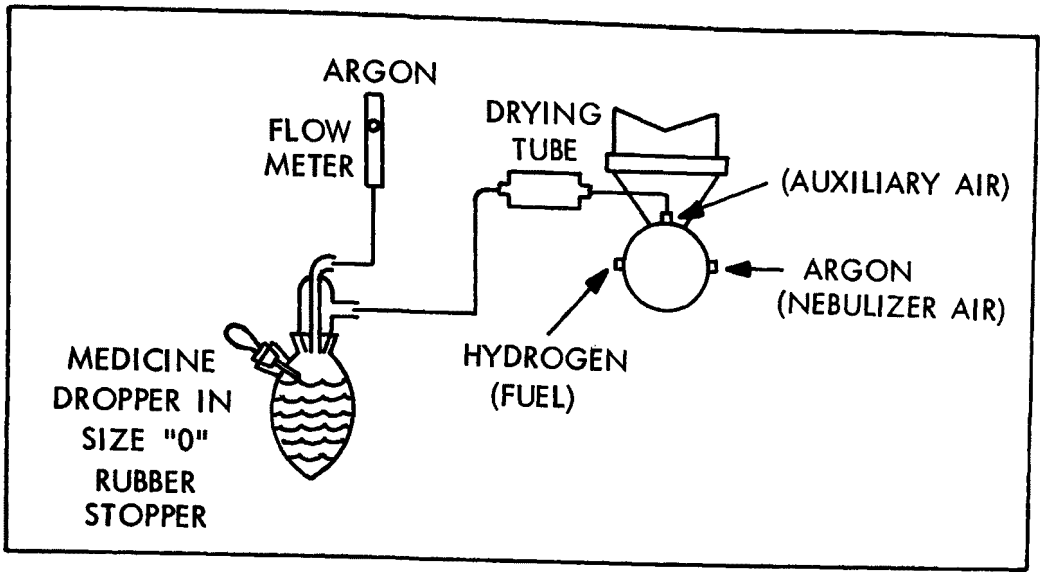

Figure 11. Schematic arrangement of equipment for determination of arsenic and selenium (reference 48).

2. Instrument operation. Because of differences between makes and models of satisfactory atomic absorption spectrophotometers, it is not possible to formulate instructions applicable to every instrument. In general, proceed as follows:

   a) Install a hollow cathode lamp of the desired metal in the instrument, set the wavelength at 196.0 mm and align the lamp in accordance with the manufacturer's instructions.

   b) Set the slit width according to the manufacturer's suggested setting for the element being measured.

   c) Turn on the instrument and apply the amount of current suggested by the manufacturer to the hollow cathode lamp.

   d) Allow the instrument to warm up until the energy source stabilizes; this process usually requires 10 to 20 min.

   e) Install a Boling burner head.

   f) Turn on the argon and adjust to a flow rate of about 8 l/min, with the auxiliary argon flow at 1 l/min.

   g) Turn on the hydrogen, adjust to a flow rate of about 7 l/min and ignite the flame. The flame is essentially colorless. To determine whether the flame is ignited, pass the hand about 30 cm (1 ft) above the burner to detect the heat emitted.

h) Atomize the standard solution (1.00 ml = 1.00 μg) of the desired metal, and adjust the burner both sideways and vertically in the light path until maximum response is obtained.

i) The instrument is now ready to run standards and samples by the arrangement of Figure 11.

3. Sample Preparation. To a 50-ml volumetric flask, add 25 ml sample, 20 ml conc HCl, and 5 ml 18N H_2SO_4.

4. Preparation of standards. Transfer 0, 0.5, 1.0, 1.5, and 2.0 ml standard selenium solution to 100-ml volumetric flasks and bring to volume with diluent to obtain concentrations of 0, 5, 10, 15, and 20 μg/l selenium.

5. Treatment of samples and standards.

a) Transfer a 25-ml portion of sample or standard to the reaction vessel.

b) Add 0.5 ml $SnCl_2$ solution. Allow at least 10 min for the metal to be reduced to its lowest oxidation state. Attach the reaction vessel to the special gas inlet-outlet glassware.

c) Fill the medicine dropper with 1.50 ml zinc slurry that has been kept in suspension with the magnetic stirrer.

d) Firmly insert the stopper containing the medicine dropper into the side neck of the reaction vessel. Squeeze the bulb to introduce the zinc slurry into the sample or standard. The metal hydride will produce a peak almost immediately. When the recorder pen returns part way to the base line, remove the reaction vessel.

e) Record the peak height or if an integrator is available the peak area.

8.2.14.3 Calculations --

1) Draw a standard curve by plotting peak heights or areas of standards versus concentration of standards.

2) Measure the peak heights of the samples and read the concentration from the curve.

3) Multiply these concentrations by two because the sample was diluted 1 + 1 with acid.

8.2.15 Phosphate Analysis

The ammonia phosphomolybdovanate colorimetric method used in this analysis of phosphate samples was adopted from standard operating procedures of the U.S. Industrial Chemical Company and the Association of Official Analytical Chemists and as reported in atmospheric emissions from thermal process phosphoric acid manufacture, cooperative study at the Manufacturing Chemists Association and the Public Health Service, U.S. Department of Health, Education and Welfare, October 1968. This method is based on the spectrophotometric determination of the yellow ammonium phosphomolybdovanadate complex formed when orthophosphate reacts with ammonium molybdate-vanadate reagent in an acid medium. The method is applicable to materials in which phosphorus compounds can be quantitatively oxidized to the orthophosphate form.

Acid hydrolysis (HNO_3-HCl, 6 to 1) is used to destroy any organic material present in the sample and to hydrolyze any phosphate in the meta or pyrophosphate form to orthophosphate. The system obeys Beer's law to about 2 milligrams of phosphorus pentoxide (P_2O_5) per 100 milliliters of solution. Results of analyses are reported in terms of P_2O_5.

Certain substances interfere with the ammonium phosphomolybdovanadate color reaction:

- Certain ions such as ferrous, stannous, and iodine should be absent because they reduce the color complex to molybdenum blue.
- Oxalates, tartrates, and citrates complex molybdenum and tend to bleach the color.
- High concentrations of iron in the sample cause high results; however, the iron salts can be converted to the perchlorate complex ion which absorbs less light.
- The interference of dichromate is well-known and results from the close resemblance of the color of the ion to the yellow complex ammonium phosphomolybdovanadate. If present, the simplest procedure seems to be the volatilization of the undesired chromium as chromic chloride from hot perchloric acid. Perchloric acid may be used as an oxidizer, provided an $HClO_4$ fume hood is available.

8.2.15.1 Apparatus and Reagents --

All reagents are prepared from ACS analytical reagent-grade chemicals in phosphate-free distilled or deionized water.

- Nitric acid (concentrated).
- Hydrochloric acid (concentrated).
- Perchloric acid (70 percent).
- Ammonium molybdate solution (0.2 M). Dissolve 35.3 grams of ammonium molybdate tetrahydare [$(NH_4)_6 Mo_7O_{24} \cdot 4 H_2O$] in distilled water and dilute to 1 liter. The reagent is stable at room temperature and can be stored in a glass stoppered bottle for at least 3 months.
- Ammonium vanadate-perchloric acid solution (0.02 M NH_4VO_3 - 4 M $HClO_4$). Dissolve 1.17 grams of ammonium metavanadate in 200 ml of distilled water and transfer to a 500-ml volumetric flask. Acidify with 172 ml of 70 percent perchloric acid, and dilute with distilled water to 500 ml. This reagent may be stored at room temperature for several months.
- Standard phosphate solution. Dry several grams of potassium dihydrogen phosphate (KH_2PO_4) in an oven at 105°C (221°F). Dissolve exactly 1.917 grams of dried KH_2PO_4 in distilled water and dilute to 1 liter in a 1-liter volumetric flask. One ml of this solution is equivalent to 1 mg of P_2O_5.

The following apparatus is required:

- Analytical balance.
- Volumetric flasks, 100-, 500-, 1000-ml.
- Erlenmeyer flasks, 250-ml.
- Hotplate.
- Spectrophotometer. This instrument should be capable of measuring color intensity at 400 nm in 0.5-in. absorbance cells or larger.
- Constant-temperature water bath. (20°C ±2°C or 68 ±4°F)
- Filter paper (Whatman No. 42).
- Filter funnels and rock.
- Pipets (1-, 2-, 5-, 10- and 20-ml).

8.2.15.2 Precautions --

Use proper protective equipment and safety precautions when handling perchloric acid. In case of contact, flush with plenty of water for 15 minutes.

Temperature and final acid strength play an important role in color development and stability. A constant temperature bath ($20^{o}C \pm 2^{o}C$ or 68 $\pm 4^{o}F$) should be used. Maximum color will develop in 15 minutes; absorbance will remain constant for at least 2 hours. Final acid strength should be constant at 0.4 M $HClO_4$ for each sample and blank. Slight increases in absorbance are encountered when acid molarity is decreased from 0.40 to 0.20.

8.2.15.3 Analysis Procedure --

1. Transfer an aliquot of the sample to a 250-ml Erlenmeyer flask. Simultaneously, prepare a blank (distilled water) and treat in the same manner. Digest the sample and blank (distilled water) with 30 ml nitric acid and 5 ml hydrochloric acid. Evaporate until HCl fumes are produced (i.e., almost to dryness) on a hotplate.

2. Cool, dilute to 25 ml with distilled water, and filter through Whatman No. 42 filter paper into a 100-ml volumetric flask to remove any insoluble material. Wash filter and flask several times with 5- to 10-ml portions of distilled water, and dilute to 100 ml.

3. Pipet 10 ml of the filtrate into another 100-ml volumetric flask.

4. Add 10 ml of ammonium vanadate-perchloric acid solution and 20 ml of ammonium molybdate solution to the 100-ml volumetric flask and dilute to the mark with distilled water.

5. Place the samples in a water bath ($20^{o}C$ or $68^{o}F$). Allow 15 minutes for complete color development.

6. Measure the absorbance against the distilled water-reagent blank, prepared simultaneously, at a wavelength of 400 nm, using a spectrophotometer and 0.5-in. (1.3 cm) cells.

7. Obtain the number of milligrams of P_2O_5 present from a previously prepared calibration curve, where absorbance was plotted versus milligrams of P_2O_5.

8. If the amount of P_2O_5 in the aliquot of the sample used is greater than 2 mg, estimate the amount of P_2O_5 present by extrapolating the calibration curve and calculate the proper aliquot size needed. Take an aliquot from the prepared filtrate (i.e., the remaining 90 ml) calculated to have an amount of P_2O_5 suitable for quantitative analysis (0.5 to 2 mg), and proceed with the analysis.

8.2.15.4 Calculation --

$$\text{Total mg } P_2O_5 = \frac{(\text{mg } P_2O_5 \text{ found})(\text{volume of original solution})}{\text{aliquot volume}}$$

8.2.15.5 Preparation of Calibration Curve --

1. Pipet exactly 0, 0.5, 1.0, 1.5, and 2.0 ml of standard P_2O_5 solution (1 ml = 1 mg P_2O_5) into 100-ml volumetric flasks.

2. Add the color developing reagents as in the analysis and dilute to the 100-ml mark. Place samples in a water bath (20°C or 68°F) and allow 15 minutes for full color development.

3. Measure the absorbance at 400 nm.

4. Plot absorbance versus milligrams of P_2O_5 on square grid graph paper. The curve follows Beer's law up to 2 mg of P_2O_5 per 100 ml of solution.

8.2.15.6 Comments --

This method is applicable to the determination of total phosphates in the concentration range of from about 50 µg to 2 mg.

REFERENCES

1. U.S. Environmental Protection Agency, Federal Register 41 No. 111, 23061, June 1976.

2. Zief, M., and R. Speights, "Ultra Purity, Methods and Techniques," Marcel Dekker, Inc., New York, N.Y., 1972.

3. Benson, A.L., P.L. Levins, A.A. Massucco and J.R. Valentine, paper presented at 67th Annual Meeting of the Air Pollution Control Association Meeting, Denver, Colorado, May 1974.

4. Gleit, C.E., P. Benson and W. Holland, Anal. Chem., 36, 2067 (1964).

5. Statnick, R., Destrich and R. Steiber, paper presented at the Annual ACS Meeting, Chicago, Illinois, 1973.

6. Baldeck, C., and G.W. Kalb, "The Determination of Mercury in Stack Gases of High SO_2 Content by the Gold Amalgamation Technique," EPA-R2-73-153, (PB 220-323), Tra Det Inc., Columbus, Ohio, January 1973, 111 pp.

7. Brenchley, D.L., D.C. Turley and R.G. Yaime, "Industrial Source Sampling," Ann Arbor Science Publishers, Ann Arbor, Michigan, 1973. 439 pp.

8. Driscoll, J.N., "Flue Gas Monitoring Techniques," Ann Arbor Science Publishers, Ann Arbor, Michigan, 1974.

9. Shelley, P.E., and G.A. Kirkpatrick, "An Assessment of Automatic Flow Samplers," EPA-R2-73-261, National Environmental Research Center, Cincinnati, Ohio, June 1973.

10. Benes, P., and I. Rajman, Collect. Czeck. Chem. Commun., 34, 1375 (1969).

11. King, W.G., J.M. Rodriguez and C.M. Wai, Anal. Chem., 46(6), 771 (1974).

12. Robertson, O.E., Anal. Chim. Acta, 42, 533 (1968).

13. Peele, R., "Mining Engineers Handbook," Vol. II, 3rd ed., J. Wiley and Sons, New York, N.Y., 1966.

14. Perry, J.H., C.H. Chilton and S.D. Kirkpatrick, "Chemical Engineers Handbook," 4th ed., McGraw-Hill Publishing Co., New York, N.Y., 1969.

15. Taggart, A.F., "Handbook of Mineral Dressing," 2nd ed., J. Wiley and Sons, New York, N.Y., 1945.

16. Welcher, F.J. (ed.), "Standard Methods of Chemical Analysis," Vol. IIA, 6th ed., Van Nostrand Publishing Co., New York, N.Y., 1963.

17. Morrison, G.H., "Trace Analysis Physical Methods," Interscience Publishers, New York, N.Y., 1965.

18. ASTM Committee D-3 and D-5, "Gaseous Fuels; Coal and Coke," 1971 Annual Book of ASTM Standards, Part 19, D2013-68, American Society for Testing and Materials, Philadelphia, Pa., 1971, p. 323-336.

19. Horwitz, W. (ed.), "Official Methods of Analysis," 11th ed., Association of Official Analytical Chemists, Washington, D.C., 1970.

20. American Public Health Association (APHA), American Water Works Association, and Water Pollution Control Federation, "Standard Methods for the Examination of Wastewater," 13th ed., Washington, D.C., 1971, 174 pp.

21. "1971 Annual Book of ASTM Standards," American Society for Testing and Materials, Philadelphia, Pa., 1971.

22. Angino, E.E., and G.K. Billings, "Atomic Absorption Spectrometry," Vol. 7 in "Methods in Geochemistry and Geophysics," Elsevier Publishing Co., New York, N.Y., 144 pp.

23. Rains, T.C., and O. Menis, "Accurate Determination of Submicrogram Amounts of Mercury in Standard Reference Materials by Flameless Atomic Absorption Spectrometry," Analytical Chemistry Division National Bureau of Standards, Washington, D.C., 1972.

24. Slavin, W., "Atomic Absorption Spectroscopy," Wiley Interscience Publishers, New York, N.Y., 1968, 307 pp.

25. Hatch, R.R., and W.L. Ott, Anal. Chem., 40(14), 2085 (December 1968).

26. Wilson, L., Anal. Chim. Acta., 35, 123 (1966).

27. Ramakushna, T.V., J.W. Robinson and P.W. West, Anal. Chim. Acta., 37, 20 (1967).

28. Perhac, R.M., and C.J. Whelan, Journal of Geochemical Exploration, 1, 47 (1973).

29. "Instrumental Analysis of Chemical Pollutants, Training Manual," PB 214-504, Environmental Protection Agency Water Quality Office, Washington, D.C., April 1971, 294 pp.

30. Kneip, T.J., R.S. Ajemian, J.R. Carlberg, J. Driscoll, L. Kornreich, J.W. Loveland, J.L. Moyers and R.J. Thompson, Health Lab. Sci., 10(4), 357 (1973).

31. Hedley, W.H., S.M. Metha and P.L. Sherman, "Determination of Hazardous Elements in Smelter-Produced Sulfuric Acid," EPA 650.2-74-131, Monsanto Research Corporation, Dayton, Ohio, December 1974, 49 pp.

32. Delgado, L.C., and D.C. Manning, Analyst, 92, 553 (September 1967).

33. Delgado, L.C., and D.C. Manning, Atomic Absorption Newsletter, 5, 1, (1966).

34. Ruch, R.R., H.J. Gluskoter and N.F. Shimp, "Occurrence and Distribution of Potentially Volatile Trace Elements in Coal," Environmental Geology Notes No. 72, Illinois State Geological Survey, August 1974, 96 pp.

35. McFarren, E.F., B.J. Moorman, and J.H. Parker, "Water Fluoride Number 3, Study No. 33," Analytical Reference Service, Environmental Control Administration, Cincinnati, Ohio, 1969, 71 pp.

36. Peters, E.T., J.E. Oberholtzer and J.R. Valentine, "Development of Methods for Sampling and Analysis of Particulate and Gaseous Fluorides from Stationary Sources," PB 213-313, EPA Contract 68-02-0099, A.D. Little, Inc., Cambridge, Massachusetts, November 1972.

37. U.S. Dept. of the Interior, Bureau of Mines, "Colorimetric Method for Arsenic in Coal," Report No. 7184, 1968.

38. Fisher Scientific, "Reagent of Choice for Arsenic," Technical Paper TD 142, 1960.

39. Lishka, R.J., and E.F. McFarren, "Water Trace Elements No. 2," Analytical Reference Service, Environmental Control Administration, Cincinnati, Ohio, 1966, 57 pp.

40. Peterson, H.P., and D. W. Zoromski, Anal. Chem., 44(7), 1291 (1972).

41. Mair, J.W., Jr., and H.G. Day, Anal. Chem., 44(12), 2015 (1972).

42 Driscoll, J.N., and A.W. Berger, "Improved Chemical Methods for Sampling and Analysis of Gaseous Pollutants from the Combustion of Fossil Fuel," PB 209-268, Walden Research Corp., Cambridge, Massachusetts, 1971.

43. Pulidlo P., K. Fuwa and B.L. Vallee, Anal. Biochem., 14, 393-404 (1966).

44. Platte, J.A., and V.M. Marcy, Atomic Absorption Newsletter, Perkins-Elmer Corporation, 4, 289-292 (1965).

45. ASTM Committee D-3 and D-5, "Gaseous Fuels; Coal and Coke," 1971 Annual Book of ASTM Standards, Part 19, D2015-68, American Society for Testing and Materials, Philadelphia, Pa., 1971, p. 343-350.

46. ASTM Committee D-19 and D-22, "Water; Atmospheric Analysis," 1971 Annual Book of ASTM Standards, Part 23, E200-67, American Society for Testing and Materials, Philadelphia, Pa., 1971, p. 870.

47. Kruse, J.M., and M.G. Mellon, Sewage and Ind. Wastes, 23, 1402 (1951).

48. American Public Health Association (APHA), American Water Works Association, and Water Pollution Control Federation, "Standard Methods for the Examination of Wastewater," 14th ed., Washington, D.C., 1976, p. 159.

49. U. S. Environmental Protection Agency, Federal Register 36 No. 234, 23248, 1971.

TECHNICAL REPORT DATA
(Please read Instructions on the reverse before completing)

1. REPORT NO. EPA-600/2-76-283	2.	3. RECIPIENT'S ACCESSION NO.
4. TITLE AND SUBTITLE Measurement Techniques for Inorganic Trace Materials in Control System Streams		5. REPORT DATE December 1976
		6. PERFORMING ORGANIZATION CODE
7. AUTHOR(S) J.A. Starkovich, R.F. Maddalone, M.L. Kraft, C.A. Zee, C. Lin, and C.A. Flegal		8. PERFORMING ORGANIZATION REPORT NO.
9. PERFORMING ORGANIZATION NAME AND ADDRESS TRW Systems Group, One Space Park, Redondo Beach, California 90278		10. PROGRAM ELEMENT NO. 1AB013; ROAP 21AFC-004
		11. CONTRACT/GRANT NO. 68-02-1393
12. SPONSORING AGENCY NAME AND ADDRESS EPA, Office of Research and Development, Industrial Environmental Research Laboratory, Research Triangle Park, NC 27711		13. TYPE OF REPORT AND PERIOD COVERED Final; 1/74-6/75
		14. SPONSORING AGENCY CODE EPA-ORD

15. SUPPLEMENTARY NOTES IERL-RTP project officer for this report is R.M. Statnick, 919/549-8411 Ext 2557, Mail Drop 62.

16. ABSTRACT The report gives results of a study showing that inorganic materials in control process streams at trace levels can be determined using modified, commercially available sampling equipment and atomic absorption analysis procedures; however, special care must be taken to attain high accuracy. Contamination and alteration of collected samples from sampling train components and laboratory analysis procedures represent the largest errors in determining trace level materials in process streams. A modified EPA/Aerotherm high-volume Method 5 sampling train provides adequate size samples in a 1 to 2 hour sampling period for determining inorganic elements present in gas source streams at 60 micrograms/cu m (1.1 x 10 to the minus 7th power gr/scf) and higher levels. The train's collection efficiency at sampling rates from 0.6 cu m/min (2 scfm) to 0.14 cu m/min (5 scfm) is greater than 95% for all elements analyzed (e.g., Hg, Li, Zn, Pb). Procedures and equipment currently in use for sampling liquids, slurries, and solids for major constituents are accurate and reliable for sampling trace materials, if adequate care is taken to minimize sample contamination or alteration. Atomic absorbtion methods employing dual channel instrumentation for background and sample matrix correction are applicable for the largest number of trace elements of interest. Sb and As can be determined accurately and with high sensitivity by colorimetric methods.

17. KEY WORDS AND DOCUMENT ANALYSIS

a. DESCRIPTORS	b. IDENTIFIERS/OPEN ENDED TERMS	c. COSATI Field/Group
Air Pollution Measurement Sampling Inorganic Compounds Industrial Processes Colorimetry Chemical Analysis	Air Pollution Control Stationary Sources Trace Materials Atomic Absorption Analysis	13B 07D 14B 07B 13H

18. DISTRIBUTION STATEMENT Unlimited	19. SECURITY CLASS (This Report) Unclassified	21. NO. OF PAGES 143
	20. SECURITY CLASS (This page) Unclassified	22. PRICE

EPA Form 2220-1 (9-73)