EPA-600/2-77-023a
January 1977

Environmental Protection Technology Series

INDUSTRIAL PROCESS PROFILES FOR ENVIRONMENTAL USE: Chapter 1. Introduction

Industrial Environmental Research Laboratory
Office of Research and Development
U.S. Environmental Protection Agency
Research Triangle Park, North Carolina 27711

EPA-600/2-77-023a
January 1977

INDUSTRIAL PROCESS PROFILES FOR ENVIRONMENTAL USE: CHAPTER 1. INTRODUCTION

by

I.A. Jefcoat and P.W. Spaite (Consultant)
Terry Parsons, Editor

Radian Corporation
P.O. Box 9948
Austin, Texas 78766

Contract No. 68-02-1319, Task 34
ROAP No. 21AFH-025
Program Element No. 1AB015

EPA Project Officer: I.A. Jefcoat

Industrial Environmental Research Laboratory
Office of Energy, Minerals, and Industry
Research Triangle Park, NC 27711

Prepared for

U.S. ENVIRONMENTAL PROTECTION AGENCY
Office of Research and Development
Washington, DC 20460

TABLE OF CONTENTS

	Page
INTRODUCTION	1
USES OF IPPEU	1
APPROACH TO CATALOG DEVELOPMENT	2
CATALOG FORMAT	5
PRESENT STATUS - FUTURE PROGRAMS	9
IPPEU NOMENCLATURE	9

LIST OF FIGURES

Figure		Page
1	EXAMPLE SCHEMATIC PROCESS FLOW SHEET. CRUDE SEPARATION SEGMENT OF THE PETROLEUM REFINING INDUSTRY (Chapter 3)	7
2	EXAMPLE PROCESS DESCRIPTION. PROCESS NO. 2, DESALTING FROM CRUDE SEPARATION SEGMENT OF THE PETROLEUM REFINING INDUSTRY (Chapter 3)	8

LIST OF TABLES

Table		Page
1	BASIC RAW MATERIALS FOR U.S. FOSSIL FUEL, METAL, AND CHEMICAL INDUSTRIES	3
2	CURRENT STUDIES INCLUDED IN THE INDUSTRIAL PROCESS PROFILES FOR ENVIRONMENTAL USE	6
3	PLANNED OR CURRENT INDUSTRY STUDIES FOR FUTURE EFFORTS IN THE INDUSTRIAL PROCESS PROFILES FOR ENVIRONMENTAL USE	10

INTRODUCTION

The catalog of Industrial Process Profiles for Environmental Use (IPPEU) has been developed as a reference source for information that is useful in various efforts to determine the environmental impacts of industrial activity in the U.S. For purposes of organization, the whole of our industrial activities has been divided into "industries" which have been defined as groups of companies that are competitively producing similar products from the same types of raw materials. Generally, industries defined in this way will employ similar technologies, have common types of environmental impacts, and will be supplying their products for further processing or consumption to the same general population of customers. Each industry is designated a chapter in the catalog. Chapters are numbered consecutively and bound individually. In all, twenty-five chapters are presented in this, the first edition of IPPEU.

USES OF IPPEU

An environmentally oriented central file of industrial process information is expected to have many uses. Some of those applications that are readily identified include:

1. A system of cataloging relevant information which has been generated by air, water, and solid waste groups who have been conducting industry studies.

2. The formation of an industry-process-pollutant matrix that highlights those emissions to air, land, and water that are most significant and those that are known to be hazardous.

3. The identification of possible new waste stream problems.

4. Provision of process synopses for quick reference and bibliography of sources for more complete information.

5. Means for gaining individual industry and process perspective as well as perspective on industry interrelationships.

6. A basic knowledge of the processes that will allow the full range of environmental control strategies to be studies and evaluated.

7. Aid in coordinating EPA's research program and efforts in air, land, and water pollution abatement.

8. Identification of process and waste stream information that is not known, resulting in the initiation of more efficient and comprehensive characterization programs.

9. Establishment of research priorities based on source assessment of the waste streams from readily identifiable processes.

10. Providing process and waste stream information to help in designing test programs, source sampling equipment, and process control equipment.

11. Use by educators as a research reference source and teaching aid.

12. Use by industrial consultants and designers to broaden the applicability of their knowledge as well as pinpoint their areas of expertise.

APPROACH TO CATALOG DEVELOPMENT

Early in the program, consideration was given to use of the Department of Commerce's Standard Industrial Classification (SIC) Manual as a basis of defining industries. It was concluded that while some SIC categories seemed to be appropriate, others were not. It was decided that industries would be identified through analysis of present commercial and industrial practices. As a first step, all industrial categories in the SIC were analyzed and the following six industry categories were identified:

1. Fossil fuel extraction - (e.g., oil and gas, coal),

2. Mineral extraction and chemical processing - (e.g., iron and steel petroleum refining, industrial organic chemicals),

3. Agricultural and forest products - (e.g., pulp and paper, grain farming),

4. Compounding and fabrication - (e.g., motor vehicles, machine tools, paint and varnish),

5. Public service industries - (e.g., utilities, sewage treatment), and

6. Public service (trade and commerce) - (e.g., gasoline stations, dry cleaning, auto repair).

In development of the catalog to date, primary attention has been given to those industries which process primary raw materials such as ores, nonmetallic minerals, coal and oil (category 2 above). The primary raw materials for industries in category 2 are shown in Table 1. After extraction, most of the raw materials are used in one of more of the following three ways: (1) directly and innocuously consumed after a relatively simple pretreatment (sand and gravel, limestone, etc); (2) used after physical processing to

Table 1. BASIC RAW MATERIALS FOR U.S. FOSSIL FUEL, METAL, AND CHEMICAL INDUSTRIES

(APPROXIMATE CONSUMPTION)

Component	Tg/Yr
Oil and Gas	1420
Sand and Gravel	834
Stone (Limestone)	700
Coal	600
Copper, Lead, Zinc Ores	396
Iron Ores	268
Lake Brines, Sea Water, Evaporites	210
Phosphate Rock	116
Clays	42
Titanium-Thorium-Zirconium Ore	25
Molybdenum Ore	20
Gypsum	15
Bauxite	14
Sulfur	8.6
Gold and Silver Ores	7.8
Uranium - Vanadium Ore	5.4
Pumice	3.3
Manganese Ore	1.9
Feldspathoid Minerals	1.8
Barite	1.7
Fluorspar	1.7
Nickel Ore	1.5
Talc and Soapstone	1.0
Chromite	0.9
Silicon Ore	0.8
Asbestos	0.7
Tungsten	0.7
Other Minerals (Abrasives, Graphite, Kyonite, Mica, Peat, Pearlite, Vermiculite)	2.1
Other Ores (Antimony, Beryllium Columbium, Tantalum, Mercury, Rare Earth, Platinum)	1.5

purify and/or put the material in forms required for further use in industry (talc for the paint industry, gypsum for plaster of paris, etc.); and (3) feedstocks for processes which extract and/or refine metals and chemicals which are in turn either used as chemical intermediates or supplied for direct usage as solvents, fuels and other products for direct consumption (e.g., petrochemical feedstocks for organic synthesis or crude oil refining to produce distillate fuel oil). Those industries producing metals and chemicals and downstream industries which are in the chain leading to consumer products involve some 12,000 processes which include the industrial activities having greatest potential for environmental impact; hence, these have been given first consideration.

Additional subjective bases for selection of industries to be considered for later issues and for assigning priorities in their evaluation were used. For the industries involving food and forest product (category 3) only those whose environmental impacts are considered as bad as or worse than the mineral-based industries were considered. Several activities classified as compounding and fabrication (category 4) were considered desirable for study because of important associated environmental effects. Industries involved with public service activities (categories 5 and 6) were considered beyond the scope of the first edition. High priorities were established for industries involving process materials having published adverse health effects.

After identification of the primary raw materials, the usage of products and by-products from the industries consuming the primary raw materials was traced; e.g., the oil and gas production industry supplies feedstocks for the petroleum refining industry which in turn supplies feedstocks for the basic petrochemicals industry and the industrial organic chemicals industry (I.O.C.I.). A significant fraction of the petrochemical industry's output serves as additional feedstock to the I.O.C.I. This industry produces some 400 chemicals which are the building blocks for many industries such as organic dyes and pigments, pesticides, medicinal chemicals, etc. The complexities of some of these downstream industries can be illustrated by considering that the organic dyes and pigments industry converts some 100 raw materials through approximately 900 intermediate chemicals into more than 2000 color products.

Industries to be considered were defined by assessing the commonality of raw materials, products, and markets for populations of companies which were believed to represent a "real world" industry. In some situations this was a relatively simple task as in the cases of the petroleum refinery industry, the iron and steel industry, and the primary aluminum industry. For others such as those involving synthetic organic products the task was more complex. Definition of industry boundaries in this situation involved first identifying companies primarily in the business of producing organic chemicals for further conversion. The boundaries of the I.O.C.I. were established by starting with 10 basic petrochemical feedstocks and constructing a chemical tree which showed downstream derivative chemicals. The tree was terminated when the chemical species under consideration were shown to be predominately feedstocks for one or more other industries. These other industries involved a significantly different population of companies which converted the industrial organic

chemical (i.e., mainly solvents and chemical intermediates) into products for consumption; e.g., organic dyes and pigments, plastics and resins, and synthetic fibers. The high level of integration of the larger companies in the I.O.C.I. with downstream industries made this industry definition task difficult in some instances, but it is felt that the boundaries as presently established are sufficiently precise to (1) permit understanding of the realtionship between products, and (2) identify all processes with significant environmental impact. The industries described in this effort are shown in Table 2.

CATALOG FORMAT

After identification of an industry the next step was to identify the environmentally significant processes which make up the industry. This was accomplished by considering the kinds of equipment and the nature of the input and output materials for each processing step involved in the conversion of input raw materials into products. Based on this information a schematic process flow sheet of the type shown in Figure 1 for the crude separation segment of the petroleum refining industry was developed. After identification of industry boundaries and the population of processes of concern, process descriptions were developed. Figure 2 illustrates the format for the process descriptions. The example is process description number 2, Desalting, from the Crude Separation Segment of the Petroleum Refining Industry.

The format for each chapter consists of the following elements:

- Industry Description
  - raw materials
  - products
  - companies
  - environmental impact
  - bibliography
- Industry Analysis
  - Segment A
    - chemical (product) tree
    - process flowsheets
    - process descriptions
  - Segment B, etc.
- Appendices
  - raw material list
  - product list
  - company list
  - other pertinent data

The industry description discusses the companies, raw materials, products, and environmental impacts in broad terms. These are typically 10-20 pages in

Table 2. CURRENT STUDIES INCLUDED IN THE INDUSTRIAL PROCESS PROFILES FOR ENVIRONMENTAL USE

Chapter No.	Industry
2	Oil and Gas Production
3	Petroleum Refining
4	Carbon Black
5	Basic Petrochemicals
6	Industrial Organic Chemicals
7	Organic Dyes and Pigments
8	Pesticides
9	Synthetic Rubber
10	Plastics and Resins
11	Synthetic Fibers
12	Explosives
13	Plasticizers
14	(Reserved for Surfactants)
15	Brine and Evaporite Chemicals
16	Fluorocarbon-Hydrogen Fluoride
17	Gypsum and Wallboard
18	Lime
19	Clay
20	Mica
21	Cement
22	Phosphate Rock & Basic Fertilizer Materials
23	Sulfur, Sulfur Oxides & Sulfuric Acid
24	Iron and Steel
25	Primary Aluminum
26	Titanium

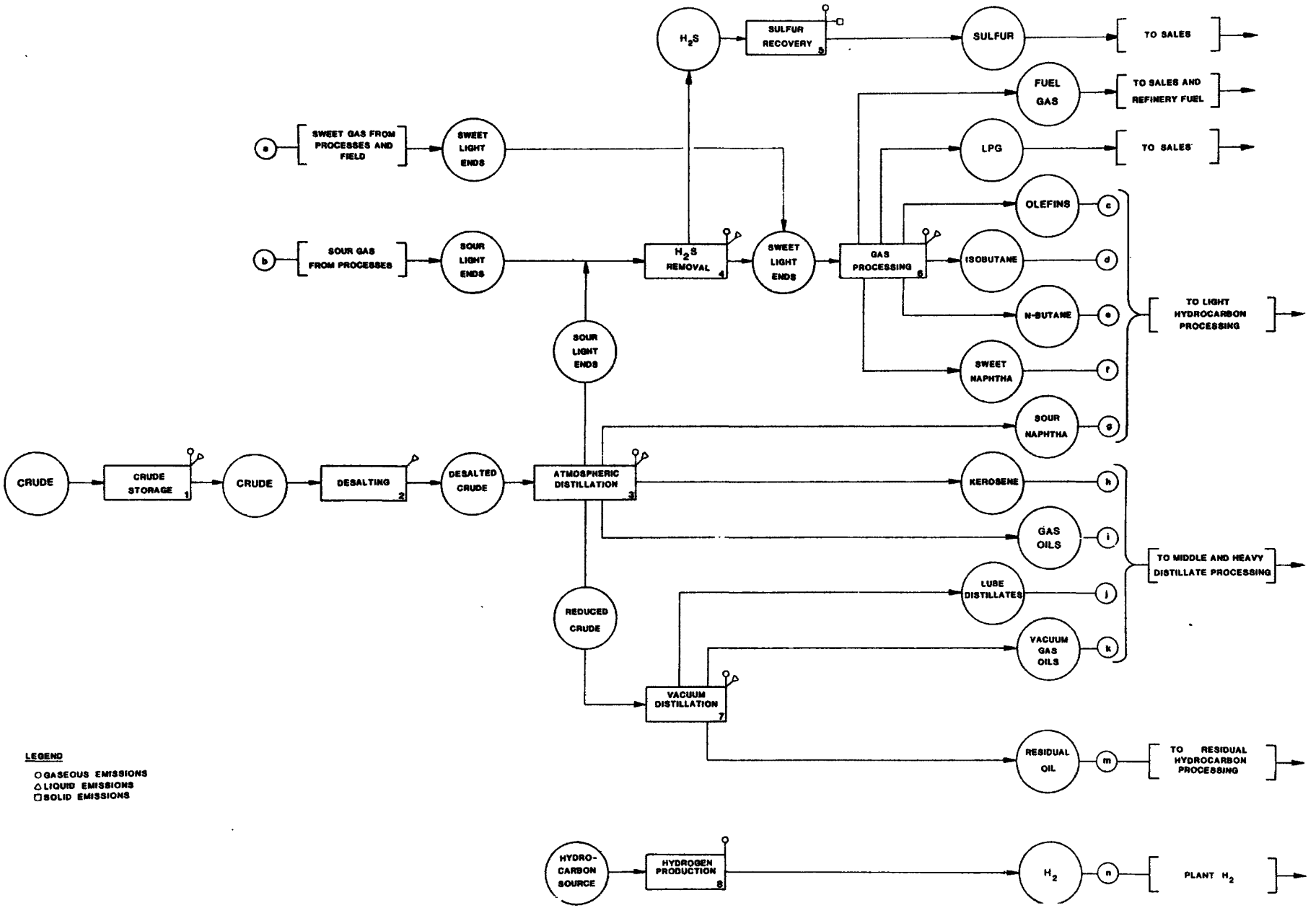

FIGURE 1. EXAMPLE SCHEMATIC PROCESS FLOW SHEET. CRUDE SEPARATION SEGMENT OF THE PETROLEUM REFINING INDUSTRY (CHAPTER 3)

Desalting

1. Function - The desalting unit is generally the first processing unit in a crude oil refining scheme. This process is used to remove salt, water, and water soluble compounds from the crude, as these compounds can eventually result in equipment fouling, corrosion, or possible catalyst poisoning in downstream processing units.

   Water is added to the incoming raw crude and thoroughly mixed. The wet crude is then heated to break emulsions and the water and dissolved impurities are separated. Separation is accomplished by physical decanting and electrostatic coalescing. The separated water is collected and sent to the waste water treating system, and the deslated crude is preheated and sent to the atmospheric distillation column.

2. Input Materials - The fuel to the desalting unit is crude oil from storage.

3. Operating Parameters -

   Temperature: 38-155°C (100-300°F)

   Pressure: 2.8+ kg/sq cm (40+ psi)

4. Utilities -

   Thermal Energy: 34,800 kcal per m^3 of crude charge (22,000 Btu/bbl) may be obtained by heat exchange with a hot stream from the distillation column or by process heaters

   Electricity: .063 kWh/m^3 - used to run pumps and the coalescer

   Process Water: 35-60 liters per m^3 of crude charged (1.5-2.5 gal/bbl)

5. Waste Streams - Only a liquid effluent is released from this unit. The effluent rate is about 47 liters per m^3 of oil processes. The largest waste water contaminants are dissolved solids (average concentration 3700 ppm) which are composed largely of chlorides, sulfates, and bicarbonates. Oil, phenols, and sulfides are also found, but in lesser concentrations. Average concentrations for these pollutants are 169, 15, and 4 ppm, respectively.

6. EPA Source Classification - None exists.

7. References

(1) Nack, H., et al., Development of an Approach to Identification of Emerging Technology and Demonstration Opportunities, EPA 650/2-74-048, Columbus, Ohio, Battelle-Columbus Labs., 1974.

(2) "Hydrocarbon Processing Refining Processes Handbook", Hydrocarbon Proc. 53(9), (1974).

(3) Radian Corporation, A Program to Investigate Various Factors in Refinery Siting, Final Report, Contract No. EQC 319, Austin, Texas, 1974.

FIGURE 2. EXAMPLE PROCESS DESCRIPTION. PROCESS NO. 2., DESALTING, FROM CRUDE SEPARATION SEGMENT OF THE PETROLEUM REFINING INDUSTRY (CHAPTER 3)

length and are intended to present environmentally oriented overview information for middle managers. The industry analysis section presents the process flowsheet and information on individual processes and their interrelationships. Process descriptions typically are 1 to 2 pages long. Information on effluent streams and other environmentally relevant information is presented chiefly for project managers and others interested in process details. The chemical (product) tree gives an overview for material flow through the industry. The appendix presents detailed information on companies, raw materials, products and environmental impacts. Other pertinent data too lengthy to include with the process or industry descriptions are also in the appendix.

It is expected that some industry entries will depart from the standard format. For example, the organic dyes and pigments industry is too complex to permit development of industrial process descriptions for each of the several thousand involved. In this situation class descriptions are presented for the more important color products, and the interrelationships within the industry segment involving production of intermediates are depicted by a chemical tree rather than a detailed process flow sheet.

Boilers represent another special situation in that the types of boilers used will generally be common to many industries. It is anticipated therefore that a special boiler catalog entry will be developed.

PRESENT STATUS - FUTURE PROGRAMS

This effort contains 24 completed industry catalog entries. An additional 15 will be needed to complete the assessment of those industries based on extracted minerals (category 2). It is anticipated that the ten most offensive industries based on food and forest products (category 3) will be considered. In addition, work will be undertaken to define problems associated with the compounding and fabrication industries. A listing of planned or current industry studies is shown in Table 3. Revision to published entries are anticipated as the need arises.

Computer storage of the data contained in each chapter is possible. This will allow the rapid assembly of data based on a particular emission with its associated processes and industries. The utility of the catalog would be increased by this ability to rapidly identify the known sources of a particular emission. The computer program could be flexible enough to allow the retrieval of data based on a compound, product, process, control device, or industry. This program shall be compatible with, if not an integral part of NEDS.

Suggestions for improving the catalog are welcome. The usefulness of the catalog to people involved with environmental problems can best be met by feedback from the users of the IPPEU.

IPPEU NOMENCLATURE

The following nomenclature has evolved based on work done by and for the EPA Control Systems Laboratory.* These are working definitions in the true

*Now the Industrial Environmental Research Laboratory, Research Triangle Park, North Carolina.

Table 3. PLANNED OR CURRENT INDUSTRY STUDIES FOR FUTURE EFFORTS IN THE INDUSTRIAL PROCESS PROFILES FOR ENVIRONMENTAL USE[a]

Mineral and Fossil Fuel Base	Agricultural and Forest Products	Fabrication and Compounding
Surfactants	Flavor and Perfume	Paint and Varnish
Secondary Non-Ferrous Metals	Pulp and Paper	Soaps and Detergents
Industrial Inorganic Chemicals	Wood Chemicals	Textiles
	Agricultural Industries	Printing Inks
Primary Metals	Vegetable Oil	Rubber Products
Ferroalloy	Wet Corn Milling	Plastic Products
Iron Founderies	Seafood Processing	Printing and Publishing
Antimony	Meat Processing	Adhesives and Sealants
Beryllium	Rendering	Lubricating Oils and Greases
Columbium-Tantalum	Coffee Roasting[b]	
Copper	Enzymes	
Gold		
Lead-Zinc		
Manganese		
Mercury		
Molybdenum		
Nickel		
Platinum Group Metals		
Rare-Earth Metals		
Silver		
Thorium		
Tin		
Tungsten		
Uranium		
Vandium		
Zirconium		
Metals Mining		
Medicinal Chemicals		
Rubber Processing Chemicals		
Nuclear Fuels		
Barium Chemicals		
Coal Mining and Preparation		
Glass		
Ceramics		
Catalysts		

Table 3 (Continued). PLANNED OR CURRENT INDUSTRY STUDIES FOR FUTURE EFFORTS IN THE INDUSTRIAL PROCESS PROFILES FOR ENVIRONMENTAL USE[a]

Mineral and Fossil Fuel Base[a]	Agricultural and Forest Products	Fabrication and Compounding
Asbestos		
Silicones		
Silcon Metal		
Pumice		
Talc and Soapstone		
Asphalt		
Other Minerals		
Graphite		
Kyanite		
Peat		
Pearlite		
Vermiculite		
Activated Carbon		
Chealting Agents		
Inorganic Color Pigments		
Inorganic White Pigments		
Radioactive Chemicals		

[a]Industrial and Commercial Boilers, Electric Utilities, and Chemical Waste Processing are also planned studies.

sense, because some were developed during the preparation of chapters in this first edition. The catalog resulted from the work of many contributors from different companies. Some of the chapters in this first edition employ nomenclature which differs from the definitions listed here. For instance, the word segment is used for the concept defined here as plant or operation. While these variations occur in many chapters, nomenclature is generally consistent within each chapter.

1. RAW MATERIALS are feed materials for "processes." They are of two types: primary raw materials that are used in the chemical form in which they were taken from the land, water, or air and secondary raw materials that are produced by other "industries."

2. INDUSTRIES are made up of groups of "companies" that are considered competitors in production of the same products. Industries have an identifiable population of companies and have a high degree of commonality with respect to raw materials consumed, processes employed, products produced, environmental control problems experienced, pollutants produced and control equipment used.

3. SEGMENTS are separate groups of companies within an industry. The companies within a segment form a subset. They may differ from other companies in the industry in one or more of the elements in the definition for industries. The companies in a segment may also employ processes and produce products that are classified in the industry as a whole or in other industries.

4. PROCESSES can be considered the basic units that collectively describe industries. All industries are in practice made up of sets of processes that have some degree of environmental impact associated with their operation. Processes are employed to produce chemical or physical transformation of input materials into "end products", "intermediate products", secondary raw materials or waste materials. Input materials can include primary or secondary raw materials, waste materials, or intermediate products.

5. PROCESS STEPS are the basic components of a process that utilize process equipment or materials handling equipment. (Process equipment includes only those components essential to economic operation of a process and does not include "control equipment.")

6. SOURCES are process steps from which significant amounts of emissions to the environment occur.

7. CONTROL EQUIPMENT is equipment whose primary function is to reduce emissions to the environment. Its presence is not essential to the economic viability of the process.

8. COMPANIES include corporate subdivisions that have a product slate similar to other companies in an industry.

9. PLANTS OR OPERATIONS are comprised of collections of processes to produce the products associated with their industry. Individual plants within an industry may employ different combinations of processes but all plants will be comprised of some of the processes that are common to the industry.

10. END PRODUCTS include only those process outputs that are marketed for use or consumption in the form that they exit from the process. After use, an end product becomes a "waste material."

11. INTERMEDIATE PRODUCTS are process output streams that go either to other processes in the same industry in which they are produced, or to other industries where they become secondary raw materials.

12. WASTE MATERIALS are either process outputs that go to a scavenging industry, or are used end products that are disposed of or processed to recover reusable constituents.

13. WASTE STREAMS are a non-product discharge to the ambient air, water, or land from an energy system or industrial process.

TECHNICAL REPORT DATA
(Please read Instructions on the reverse before completing)

1. REPORT NO. EPA-600/2-77-023a	2. NTIS No. PB 266274/AS	3. RECIPIENT'S ACCESSION NO.
4. TITLE AND SUBTITLE Industrial Process Profiles for Environmental Use: Chapter 1. Introduction		5. REPORT DATE January 1977
		6. PERFORMING ORGANIZATION CODE
7. AUTHOR(S) Terry Parsons, Editor		8. PERFORMING ORGANIZATION REPORT NO.
9. PERFORMING ORGANIZATION NAME AND ADDRESS Radian Corporation P.O. Box 9948 Austin, Texas 78766		10. PROGRAM ELEMENT NO. 1AB015; ROAP 21AFH-025
		11. CONTRACT/GRANT NO. 68-02-1319, Task 34
12. SPONSORING AGENCY NAME AND ADDRESS EPA, Office of Research and Development Industrial Environmental Research Laboratory Research Triangle Park, NC 27711		13. TYPE OF REPORT AND PERIOD COVERED Initial; 8/75-11/76
		14. SPONSORING AGENCY CODE EPA/600/13

15. SUPPLEMENTARY NOTES Authors are I. A. Jefcoat and P. W. Spaite (Consultant). IERL-RTP project officer Jefcoat is no longer with EPA: contact G. Tucker, IERL-RTP, Mail Drop 63, 919/541-2745.

16. ABSTRACT

The catalog was developed to aid in defining the environmental impacts of U.S. industrial activity. Entries for each industry are in consistent format and form separate chapters of the catalog. Chapter 1 is an introduction to the catalog and identifies a number of expected uses for the information contained in the various chapters. It explains the approach to catalog development, as well as the basic catalog format. It provides examples of typical information to be found in subsequent chapters, along with definitions for specific catalog nomenclature. It presents plans for future programs for the assessment of industrial processes and their impact on the environment.

17. KEY WORDS AND DOCUMENT ANALYSIS

a. DESCRIPTORS	b. IDENTIFIERS/OPEN ENDED TERMS	c. COSATI Field/Group
Pollution	Process Assessment	13B
Industrial Processes	Environmental Impact	13H
Chemical Engineering		07A

18. DISTRIBUTION STATEMENT Unlimited	19. SECURITY CLASS (This Report) Unclassified	21. NO. OF PAGES 17
	20. SECURITY CLASS (This page) Unclassified	22. PRICE

EPA Form 2220-1 (9-73)