EPA-600/2-77-023g
February 1977

Environmental Protection Technology Series

INDUSTRIAL PROCESS PROFILES FOR ENVIRONMENTAL USE: Chapter 7. Organic Dyes and Pigments Industry

Industrial Environmental Research Laboratory
Office of Research and Development
U.S. Environmental Protection Agency
Cincinnati, Ohio 45268

RESEARCH REPORTING SERIES

Research reports of the Office of Research and Development, U.S. Environmental Protection Agency, have been grouped into five series. These five broad categories were established to facilitate further development and application of environmental technology. Elimination of traditional grouping was consciously planned to foster technology transfer and a maximum interface in related fields. The five series are:

1. Environmental Health Effects Research
2. Environmental Protection Technology
3. Ecological Research
4. Environmental Monitoring
5. Socioeconomic Environmental Studies

This report has been assigned to the ENVIRONMENTAL PROTECTION TECHNOLOGY series. This series describes research performed to develop and demonstrate instrumentation, equipment, and methodology to repair or prevent environmental degradation from point and non-point sources of pollution. This work provides the new or improved technology required for the control and treatment of pollution sources to meet environmental quality standards.

This document is available to the public through the National Technical Information Service, Springfield, Virginia 22161.

EPA-600/2-77-023g
February 1977

INDUSTRIAL PROCESS PROFILES FOR ENVIRONMENTAL USE

CHAPTER 7

ORGANIC DYES AND PIGMENTS INDUSTRY

by

Thomas R. Steadman and Eleanor W. Helper
Battelle-Columbus
Columbus, Ohio 43201

T. Parsons, G.E. Wilkins, and N.P. Phillips
Radian Corporation
Austin, Texas 78766

Contract No. 68-02-1319

Project Officer

Alfred B. Craig
Metals and Inorganic Chemicals Branch
Industrial Environmental Research Laboratory
Cincinnati, Ohio 45268

INDUSTRIAL ENVIRONMENTAL RESEARCH LABORATORY
OFFICE OF RESEARCH AND DEVELOPMENT
U.S. ENVIRONMENTAL PROTECTION AGENCY
CINCINNATI, OHIO 45268

DISCLAIMER

This report has been reviewed by the Industrial Environmental Research Laboratory - Cincinnati, U.S. Environmental Protection Agency, and approved for publication. Approval does not signify that the contents necessarily reflect the views and policies of the U.S. Environmental Protection Agency, nor does mention of trade names or commercial products constitute endorsement or recommendation for use.

TABLE OF CONTENTS

CHAPTER 7

	Page
INDUSTRY DESCRIPTION	1
Raw Materials	3
Products	4
Companies	10
Environmental Impact	10
Bibliography	12
INDUSTRY ANALYSIS	13
Process No. 1. Nitroso Dyes (C.I. 10005, 10006, 10020)	65
Process No. 2. Nitro Dyes (C.I. 10316)	66
Process No. 3. Nitro Dyes (C.I. 10338, 10345)	67
Process No. 4. Azo Dyes and Pigments	69
Process No. 5. Stilbene Dyes	73
Process No. 6. Selected DI- and Triarylmethane Dyes from Various Intermediates	76
Process No. 7. Triarylmethane Dyes (C.I. 42500, 42536, 42760, 42780)	79
Process No. 8. Triarylmethane Dyes (C.I. 42555, 42561, 42595, 42600, 44025, 44090)	82
Process No. 9. Triarylmethane Dyes (C.I. 43820, 43830) and a Methine Dye (C.I. 48000)	85
Process No. 10. Triarylmethane Dyes and Pigments (C.I. 44040, 44054) and an Acridine Dye (C.I. 46005)	87
Process No. 11. Xanthene Dyes (C.I. 45100, 45350)	90
Process No. 12. Halogenation of Dyes	93
Process No. 13. Quinacridone Pigment (C.I. 46500)	95

TABLE OF CONTENTS (Continued)

CHAPTER 7

	Page
Process No. 14. Quinoline Dyes	96
Process No. 15. Sulfonation of Dyes	98
Process No. 16. Polymethine Dyes	100
Process No. 17. Thiazole Dyes and Pigments	102
Process No. 18. Formation of Pigments from Selected Dyes	104
Process No. 19. Azine Dyes (C.I. 50204, 50240, 50400, 50415)	106
Process No. 20. Oxazine Dyes and Pigments	109
Process No. 21. A Thiazine Dye (C.I. 52015)	112
Process No. 22. Sulfur Dyes (C.I. 53000, 53830, 69705)	114
Process No. 23. Alizarin (C.I. 58000)	117
Process No. 24. Pyranine (C.I. 59040)	118
Process No. 25. Pyrathrone (C.I. 59700)	119
Process No. 26. Benzanthrone Dyes	121
Process No. 27. Isoviolanthrone Dyes (C.I. 60000, 60015)	124
Process No. 28. Anthraquinone Dyes and Pigments (Aminolysis)	126
Process No. 29. Anthraquinone Dyes (Methylation)(C.I. 60755, 61105)	128
Process No. 30. Anthraquinone Dyes (C.I. 60756, 62020, 62025, 62070)	129
Process No. 31. Anthraquinone Dyes (Amide Formation) (C.I. 61725, 63365, 65049, 68420)	131
Process No. 32. Anthraquinone Dyes (Nitration of Diaminoanthraquinones) (C.I. 62030, 64500)	133
Process No. 33. Anthraquinone Dyes (C.I. 63010)	135

TABLE OF CONTENTS (Continued)

CHAPTER 7

Page

Process No. 34. Anthraquinone Dyes (Anthracarbazoles) (C.I. 65230, 69500, 69525) 137

Process No. 35. Anthraquinone Dyes (Anthrapyrazoles) (C.I. 70315, 70320) 138

Process No. 36. Anthraquinone Dyes (an Oxazole and a a Thiazole Type)(C.I. 67000, 67300) 140

Process No. 37. Anthraquinone Dyes and Pigments (Anthracarbazoles)(C.I. 69015, 69025) 141

Process No. 38. Anthraquinone Dyes and Pigments-- Indanthrone and Flavanthrone (C.I. 69800, 70600) 143

Process No. 39. Anthraquinone Dyes (Anthracarbazoles) (C.I. 70800, 70805, 71050) 144

Process No. 40. Cyclic Imide Dyes and Pigments (C.I. 71100, 71110) 146

Process No. 41. Perylene Vat Dyes and Pigments (C.I. 71129, 71145, and 3,4,9,10-Perylenetetra-carboxylic Anhydride) 147

Process No. 42. Indigoid Dye (C.I. 73000) 149

Process No. 43. Indigoid Dye (C.I. 73300) 150

Process No. 44. Indigoid Dye and Pigment (C.I. 73395, 73410) 151

Process No. 45. Indigoid Dyes and Pigments 153

Process No. 46. Indigoid Dye (C.I. 73670) 155

Process No. 47. Phthalocyanine Dyes and Pigments (C.I. 74160, 74240, 74260, 74460) 157

Process No. 48. Finishing Steps for Pigment or Dry Production 160

TABLE OF CONTENTS (Concluded)

CHAPTER 7

Page

Appendix A - Raw Materials Used to Manufacture Organic Dyes, Pigments and Their Intermediates..... 163

Appendix B - Dyes and Pigments Manufactured in the United States in 1973, Listed in Numerical Order by Color Index Numbers..... 169

Appendix C - Dyes and Pigments Manufactured in 1973 Listed in Alphabetical Order by Manufacturer..... 181

Appendix D - Location of Plants Manufacturing Dyes, Pigments or Intermediates, Listed Alphabetically by Name of the Manufacturer..... 249

Appendix E - Locations of Dye and Pigment Manufacturing Plants Listed by Region..... 337

LIST OF FIGURES

CHAPTER 7

Figure		Page
1-1	Synthesis of Various Intermediates for Dye and Pigment Production from Purchased Starting Material: Acenaphthene.	15
1-2	Synthesis of Various Intermediates for Dye and Pigment Production from Purchased Starting Material: Aniline.	116
1-3	Synthesis of Various Intermediates for Dye and Pigment Production from Purchased Starting Material: Anthranilic Acid. . .	19
1-4	Synthesis of Various Intermediates for Dye and Pigment Production from Purchased Starting Material: Benzaldehyde.	19
1-5	Synthesis of Various Intermediates for Dye and Pigment Production from Purchased Starting Material: Benzenesulfonic Acid.	19
1-6	Synthesis of Various Intermediates for Dye and Pigment Production from Purchased Starting Material: Carbazole.	20
1-7	Synthesis of Various Intermediates for Dye and Pigment Production from Purchased Starting Material: Chlorobenzene. . . .	20
1-8	Synthesis of Various Intermediates for Dye and Pigment Production from Purchased Starting Material: p-Chlorobenzenesulfonic Acid.	25
1-9	Synthesis of Various Intermediates for Dye and Pigment Production from Purchased Starting Material: p-Chloronitrobenzene.	27

LIST OF FIGURES (Continued)

CHAPTER 7

Figure		Page
1-10	Synthesis of Various Intermediates for Dye and Pigment Production from Purchased Starting Material: o-Chlorobenzoic Acid.	30
1-11	Synthesis of Various Intermediates for Dye and Pigment Production from Purchased Starting Material: p-Chlorobenzoic Acid.	30
1-12	Synthesis of Various Intermediates for Dye and Pigment Production from Purchased Starting Material: m-Chlorobenzoyl Chloride.	30
1-13	Synthesis of Various Intermediates for Dye and Pigment Production from Purchased Starting Material: o-Cresol.	30
1-14	Synthesis of Various Intermediates for Dye and Pigment Production from Purchased Starting Material: m-Cresol.	31
1-15	Synthesis of Various Intermediates for Dye and Pigment Production from Purchased Starting Material: p-Cresol.	31
1-16	Synthesis of Various Intermediates for Dye and Pigment Production from Purchased Starting Material: 2,4-Diaminotoluene. .	31
1-17	Synthesis of Various Intermediates for Dye and Pigment Production from Purchased Starting Material: o-Dichlorobenzene. .	31
1-18	Synthesis of Various Intermediates for Dye and Pigment Production from Purchased Starting Material: p-Dichlorobenzene. .	32
1-19	Snythesis of Various Intermediates for Dye and Pigment Production from Purchased Starting Material: Diphenylamine. . . .	33

LIST OF FIGURES (Continued)

CHAPTER 7

Figure		Page
1-20	Synthesis of Various Intermediates for Dye and Pigment Production from Purchased Starting Material: Hydroquinone.	33
1-21	Synthesis of Various Intermediates for Dye and Pigment Production from Purchased Starting Material: p-Hydroxybenzoic Acid.	34
1-22	Synthesis of Various Intermediates for Dye and Pigment Production from Purchased Starting Material: Isophthalic Acid. . .	34
1-23	Synthesis of Various Intermediates for Dye and Pigment Production from Purchased Starting Material: Naphthalene.	34
1-24	Synthesis of Various Intermediates for Dye and Pigment Production from Purchased Starting Material: 1-Naphthol.	42
1-25	Synthesis of Various Intermediates for Dye and Pigment Production from Purchased Starting Material: Nitrobenzene.	43
1-26	Synthesis of Various Intermediates for Dye and Pigment Production from Purchased Starting Material: o-Nitrophenol. . . .	46
1-27	Synthesis of Various Intermediates for Dye and Pigment Production from Purchased Starting Material: p-Nitrophenol. . . .	47
1-28	Synthesis of Various Intermediates for Dye and Pigment Production from Purchased Starting Material: m-Nitrotoluene. . . .	47
1-29	Synthesis of Various Intermediates for Dyes and Pigment Production from Purchased Starting Material: o-Nitrotoluene. . . .	48

LIST OF FIGURES (Continued)

CHAPTER 7

Figure		Page
1-30	Synthesis of Various Intermediates for Dye and Pigment Production from Purchased Starting Material: p-Nitrotoluene. . . .	50
1-31	Synthesis of Various Intermediates for Dye and Pigment Production from Purchased Starting Material: Phenol.	51
1-32	Synthesis of Various Intermediates for Dye and Pigment Production from Purchased Starting Materials: o- and p-Phenolsulfonic Acid.	51
1-33	Synthesis of Various Intermediates for Dye and Pigment Production from Purchased Starting Materials: o- and p-Phenolsulfonic Acid.	51
1-34	Synthesis of Various Intermediates for Dye and Pigment Production from Purchased Starting Material: Phthalic Anhydride.	52
1-35	Synthesis of Various Intermediates for Dye and Pigment Production from Purchased Starting Material: Resorcinol.	60
1-36	Synthesis of Various Intermediates for Dye and Pigment Production from Purchased Starting Material: Salicylic Acid. . . .	60
1-37	Synthesis of Various Intermediates for Dye and Pigment Production from Purchased Starting Material: Toluene.	60
1-38	Synthesis of Various Intermediates for Dye and Pigment Production from Purchased Starting Material: p-Toluenesulfonic Acid.	61

LIST OF FIGURES (Continued)

CHAPTER 7

Figure		Page
1-39	Synthesis of Various Intermediates for Dye and Pigment Production from Purchased Starting Material: p-Toluenesulfonyl Chloride.	62
1-40	Synthesis of Various Intermediates for Dye and Pigment Production from Purchased Starting Material: 1,2,4 Trichlorobenzene.	63
1-41	Synthesis of Various Intermediates for Dye and Pigment Production from Purchased Starting Material: Trimellitic Anhydride.	63
1-42	Synthesis of Various Intermediates for Dye and Pigment Production from Purchased Starting Material: m-Xylene.	63
2-1	Flow Chart for the Production of Selected Nitroso and Nitro Dyes and Pigments from Various Intermediates.	64
2-2	Flow Chart for the Production of Selected Azo Dyes and Pigments from Various Intermediates.	68
2-3	Flow Chart for the Production of Selected Stilbene Dyes and Pigments from Various Intermediates.	72
2-4	Flow Chart for the Production of Selected Diarylmethane and Triarylmethane Dyes and Derived Pigments from Various Intermediates.	75
2-5	Flow Chart for the Production of Selected Triarylmethane Dyes and Pigments from Various Intermediates.	78

LIST OF FIGURES (Continued)

CHAPTER 7

Figure		Page
2-6	Flow Chart for the Production of Selected Triarylmethane Dyes and Pigments from Various Intermediates.	81
2-7	Flow Chart for the Production of Selected Triarylmethane and Methane Dyes from Various Intermediates.	84
2-8	Flow Chart for the Production of Selected Triarylmethane and Acridine Dyes and Pigments from Various Intermediates. . . .	86
2-9	Flow Chart for the Production of Selected Xanthene Dyes and Pigments from Various Intermediates.	89
2-10	Flow Chart for the Production of Dyes and Pigments by Halogenation of Selected Dyes.	92
2-11	Flow Chart for the Production of a Quinacridone Pigment and Selected Quinoline Dyes from Various Intermediates.	94
2-12	Flow Chart for the Production of Dyes and Pigments by Sulfonation of Selected Dyes and Pigments.	97
2-13	Flow Chart for the Production of Selected Polymethine Dyes from Various Intermediates.	99
2-14	Flow Chart for the Production of Selected Thiazole Dyes and Pigments from Various Intermediates.	101
2-15	Flow Chart for the Production of Pigments from Selected Dyes. .	103
2-16	Flow Chart for the Production of Selected Azine Dyes from Various Intermediates.	107

LIST OF FIGURES (Continued)

CHAPTER 7

Figure		Page
2-17	Flow Chart for the Production of Selected Oxazine Dyes and Pigments from Various Intermediates.	108
2-18	Flow Chart for the Production of a Thiazine Dye from Various Intermediates.	111
2-19	Flow Chart for the Production of Selected Sulfur Dyes from Various Intermediates.	113
2-20	Flow Chart for the Production of Miscellaneous Vat Dyes and Pigments Based on Anthraquinone and Pyrene.	116
2-21	Flow Chart for the Production of Benzanthrone Dyes from Various Intermediates.	120
2-22	Flow Chart for the Production of Isoviolanthrone Dyes from Various Intermediates	123
2-23	Flow Chart for the Production of Anthraquinone Dyes and Pigments by Aminolysis of Various Intermediates.	125
2-24	Flow Chart for the Production of Selected Anthraquinone Dyes and Pigments from Various Intermediates.	127
2-25	Flow Chart for the Production of Selected Anthraquinone Dyes and Pigments from Various Intermediates.	130
2-26	Flow Chart for the Production of an Anthraquinone Dye from Various Intermediates.	134

LIST OF FIGURES (Concluded)

CHAPTER 7

Figure		Page
2-27	Flow Chart for the Production of Selected Anthraquinone Dyes from Various Intermediates - Anthraquinonecarbazoles and Anthrapyrazoles.	136
2-28	Flow Chart for the Production of Selected Anthraquinone Dyes and Pigments from Various Intermediates.	139
2-29	Flow Chart for the Production of Selected Anthraquinone Dyes and Pigments from Various Intermediates.	142
2-30	Flow Chart for the Production of Selected Cyclic Imide and Perylene Vat Dyes and Pigments from Various Intermediates. .	145
2-31	Flow Chart for the Production of Selected Indigoid Dyes and Pigments from Various Intermediates.	148
2-32	Flow Chart for the Production of Selected Indigoid Dyes and Pigments from Various Intermediates.	152
2-33	Flow Chart for the Production of Selected Phthalocyanine Dyes and Pigments from Various Intermediates.	156
2-34	Flow Chart for Finishing Steps for Pigment or Dye Production.	159

LIST OF TABLES

Table		Page
1	Classification of Dyes and Pigments in Colour Index Categories	5
2	Glossary of Terms Used in Diagrams for Synthesis of Intermediates	14
A-1	Raw Materials Used to Manufacture Organic Dyes, Pigments and Their Intermediates	164
B-1	Dyes and Pigments By Color Index Number in Numerical Order	170
C-1	Dyes and Pigments Manufactured in 1973	182
D-1 Through D-58	Location of Plants Manufacturing Dyes, Pigments or Intermediate, Listed Alphabetically by Name of the Manufacturer	249
E-1	Locations of Dye and Pigment Manufacturing Plants	338

ACKNOWLEDGEMENTS

This document was prepared for EPA by Batelle Columbus Laboratories under Contract No. 68-02-1323, Task No. 26. The contributions of Dr. Thomas R. Steadman and Mrs. Eleanor W. Helper in preparation of this catalog entry are gratefully acknowledged.

Helpful review comments from C. Fred Gurnham were received and incorporated into this chapter.

ORGANIC DYES AND PIGMENTS

INDUSTRY DESCRIPTION

The organic dyes and pigments industry is engaged in the conversion of purchased organic chemicals, usually cyclic benzenoids, into more complex intermediates and ultimately into dyes and pigments. The distinction between these intermediate compounds and dyes or pigments is arbitrary since many of the intermediates may be dyes themselves.

In the past the dyes and pigments industry started with benzene, naphthalene and other raw materials derived directly from coal tar. In those times, for example, aniline was produced and used almost entirely within the industry. Aniline can no longer be regarded in this light. Only 8 percent of the total production of aniline is used to make dyes and pigments.[1] Today aniline and even some of the more complex intermediates are purchased by dye and pigment producers from sources outside the industry.

A total of forty-eight processes have been judged necessary to summarize the operations carried out in manufacturing dyes and pigments. A general description of the operations in this industry includes the following five steps.[2]

Step 1. Introduction of substituents on aromatic ring (benzene, toluene, naphthalene, napththol, and anthraquinone). These are usually one-step processes such as sulfonation, nitration, halogenation, Friedel-Crafts alkylation or oxidation.

Step 2. Replacement of substituents with more reactive groups which cannot be introduced directly, such as OH, NH_2, CH, OR, SR, and MRR′.

Step 3. Further development of functional groups in reactions specific for particular dyes.

Step 4. Combination of intermediates to form products with skeletal dye structure. This step includes such processes as condensation, coupling, and dimerization.

Step 5. Dye and pigment formation.

Detailed discussions of these operations are given in the accompanying process descriptions, flow sheets, and diagrams for synthesis of intermediates. Steps 1 through 3 and some examples of Step 4 are described in the synthesis diagrams or Chemical Trees. Steps 4 and 5 are covered in the Process Descriptions and flow sheets.

No single producer of dyes and pigments employs all forth-eight of the processes described in the Process Descriptions, because individual organizations manufacture only limited numbers and kinds of colors. The organic dyes and pigments industry sells more than 1000 different products. Perhaps as many as another 1000 products are made en route to the final products. The industry is comprised of fifty-eight individual companies with facilities at eighty-seven locations.[3,4]

In 1973, total United States production of dyes and pigments was nearly 354 million pounds. Sales were almost 328 million pounds with a total value of about $701 million, corresponding to an average unit value of $2.14 per pound. This high unit value for dyes and pigments provides a key to understanding the industry's basic business approach. Obviously, large inventories are too costly, and, in consequence, the industry is forced to make its products in relatively small batch operations. Such operations are, of course, labor intensive. No further information is available regarding variations in the size of manufacturing facilities and the approximate number of employees.

The geographic locations of plants are various, but the great majority of the operations are located on the Eastern seaboard.[3,4] Many small plants are located in New England because of the historic importance there of the textile industry which uses two-thirds of the dyes produced.

The migration of the textile industry to the southern states has led to the location of some dye manufacturing operations there. The greatest number of plants, some of them large, are located in New Jersey, probably because these locations offered suitable means for disposing of the large volumes of waste streams involved. The large companies with relatively unusual locations are the Allied Chemical Corporation (Buffalo, New York) and the American Color and Chemical Corporation (Lock Haven, Pennsylvania, among other locations).

Industry growth in dye production over the last ten years averaged slightly less than 4 percent annually, and the long-term growth rate is expected to continue in the range of 3 to 4 percent per year.

Pigments are far fewer in number than the dyes (only about one-tenth as many) and have a higher average unit value. Industry has recently been replacing some of the more expensive dyes with pigments in some textile applications. For the next five years, the yearly growth rate is expected to be around 5 percent.

No information is available about the dye and pigment industry practices in respect to steam and power generation on-site.

Raw Materials

A list of raw materials purchased by the Organic Dyes and Pigments Industry is shown in Appendix A. They are classified as organic and inorganic. Many of the raw materials listed were formerly produced exclusively by the Organic Dyes and Pigments Industry for use largely within the industry. An excellent example is the case of aniline. In the past nearly all the aniline was made by the organic dyes and pigments industry for use within the industry. Today only 8 percent of the output of aniline in the United States is used to make dyes and pigments.[5]

It is important to note that many of the intermediates used in making dyes and pigments are toxic in nature. Even more important is the point that some dye and pigment intermediates are carcinogenic. The two most notorious such intermediates are benzidine and 2-naphthylamine. Today, benzidine, because of its carcinogenic properties, is manufactured in the

United States only by the Allied Chemical Corporation, and 2-naphthylamine is not made by any company in the United States. For most applications where 2-naphthylamine was formerly required, 2-amino-1-naphthalenesulfonic acid serves as a safe and adequate replacement material.

Products

The two main classes of products from this industry are dyes and pigments. Two technical terms for pigments are toners and lakes. "Toners" are full strength organic or metallo-organic colors not containing any inorganic pigment or carrier. "Lakes" are combinations of a dye with an inorganic base or carrier, usually alumina hydrate.

For purposes relating to applications of colors, these products are classified according to the chemical and physical properties which relate to the use of the products. It is this kind of classification which is used by the United States Tariff Commission annual publication, "Synthetic Organic Chemicals, United States Production and Sales." Such a classification is not helpful for the purpose of this report. Instead, the dyes and pigments are classified according to the nature of their chemical structure, because this reflects the nature of the processes involved in making the colors. The twenty-four classifications adopted are listed in Table 1. This classification system is essentially the same as that used by the standard reference work, The Colour Index.[5] Assignment of a unique five-digit number known as the Colour Index (C.I.) Constitution Number is made based strictly on the chromophore structure. The range of C.I. Numbers for each key colorant group is given in Table 1. Arrangement within each class is established according to the following principles:

1. Simpler colorants precede more complex compounds.

2. Aliphatic compounds are listed before aromatics, which appear in the order - benzene, naphthalene, anthracene, and heterocyclic.

Table 1. CLASSIFICATION OF DYES AND PIGMENTS IN COLOUR INDEX CATEGORIES

Class	C. I. Number	Chromophore	Auxochrome	Applications	Toxicity Information[1]
Nitroso (Quinone Oximes)	10000-10299	-N=0		Wallpaper, rubber coloration, textile printing, interior aqueous paints	Pigment Green B(C.I. 10006) - acute oral LD_{50} > 10 g/kg[4]
Nitro	10300-10999	$-NO_2$	Hydroxyl and amino groups	Sulfonated nitro dyes and pigments - wool, silk, paper, printing ink, transparent lacquer, external drug and cosmetic colorant. Unsulfonated nitrodiarylamines - yellow and orange disperse dyes for synthetic fibers. Unsulfonated nitro dyes - pigments, fungicides, insecticides, explosives.	Acid yellow 1 (C.I. 10316) - consult latest Government regulations before using in food, drugs, or cosmetics.[6]
Azo	11000-39999	-N=N-	Usually hydroxyl or amino	Very wide range of application. Natural and synthetic fiber dyes, pigments, solvent dyes and various non-textile applications.	Some azo dyes have produced cancer in rats and are considered carcinogenic.[7]
Monoazo	11000-19999				
Disazo	20000-20999				
Trisazo	30000-34999				
Polyazo	35000-36999				
Azoic (Mixtures of intermediates - Not finished dyes)	37000-39999				
Stilbene	40000-40799	-N=N- azo and/or -N=N- (O) azoxy		Direct dyes, fluorescent dyes, secondary uses as leather, lake-forming or solvent dyes.	Some azo dyes have produced cancer in rats and are considered carcinogenic.[7]
Carotenoid	40800-40999	Polyene chain of at least 18 carbon atoms with conjugated double bonds		Natural carotenoids (C.I. 75110-75135) Synthetic carotenoids - important food dyes	Food dyes - assumed non-toxic.

Table 1. CLASSIFICATION OF DYES AND PIGMENTS IN COLOUR INDEX CATEGORIES (Continued)

Class	C. I. Number	Chromophore	Auxochrome	Applications	Toxicity Information[1]
Diphenylmethane (Ketone Imines) (Auramines)	41000-41999	>C=NH		Dyeing wool, silk, leather, acrylic fibers, cotton, paper, and jute	Auramine ($C_{17}H_{22}N_3Cl$)- recognized as a carcinogen.(7)
Triarylmethane	42000-44999	Quinoid grouping appearing as: >C=Ar=NH or >C=Ar=O	Two or three auxochromes usually in para-position to the methane C atom.	Basic, acid, direct, mordant, cosmetic, and solvent dyes. Pigments of phosphomolybdotungstic acid lake type.	Peacock Blue Lake (from C.I. 42090) - low toxicity(4) malachite Green (C.I. 42000) - oral LD (rabbits) = 75 mg/kg(6) C.I. 42040: LD_{100} iv in mice 3 mg/kg(6) C.I. 42780: probably low human toxicity.(6)
Xanthene	45000-45999	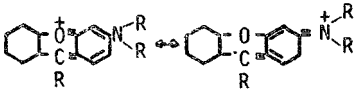 (R = H, alkyl, or aryl)	The usual auxochromes in para-position to the methane C atom.	In general, dyeing natural fibers. Hydroxy derivatives - mordant dyes	C.I. 45010: Carcinogenic(6) C.I. 45350: LD orally in rabbits 2.5 g/kg(6) C.I. 45380: LD orally in guinea pigs 5.0 g/kg(6)
Acridine	46000-46999	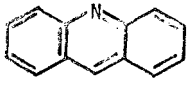	Amino or alkylamino groups in aryl groups in para-position to the C atom of methane residue.	Broad applications in trade sales and industrial paints as tints, metallics, and blends with other pigments. Especially suitable for leather and plastic; also to some extent in textiles, silk, cellulose, and industrial antiseptic.	C.I. 46000: LD s.c. in mice 250 mg/kg.(6)
Quinoline	47000-47999	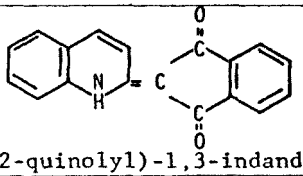 2-(2-quinolyl)-1,3-indandione		Drug and cosmetic color, food dye (Europe), paper. Sulfonated compounds valuable as acid wool dyes.	
Methine and polymethine	48000-48999	Conjugate chain of carbon atoms terminated by an ammonium group and, in addition, a nitrogen, sulfur or oxygen atom, or an equivalent unsaturated group		Important for use in photography as sensitizers.	

Table 1. CLASSIFICATION OF DYES AND PIGMENTS IN COLOUR INDEX CATEGORIES (Continued)

Class	I. C. Number	Chromophore	Auxochrome	Applications	Toxicity Information[1]
Thiazole	49000-49399	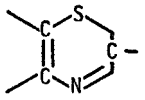		May be used as direct cotton dyes; the original Ingrain colors. Used in printing to obtain colored discharges.	
Indamine	49400-49699	Quinonoid Nucleus: 		Intermediates in the preparation of sulfur dyes and in color photography.	
Indophenol	49700-49999				
Azine	50000-50999	Pyrazine 	Groups in meta position to the nitrogen.	Wool, silk, and mordanted cotton dyes. Nonsulfonated dyes used for cotton printing and as colors for fats, oils, and lacquers.	C.I. 50040: LD_{50} iv for rabbits 100 mg/kg[6] C.I. 50440: mild sensitizer[7]
Oxazine	51000-51999	Oxazine: 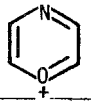	Amino groups and hydroxyl groups in meta position to the oxygen.	Wool and mordanted cotton dyes. Also used for leather and solvent dyes.	
Thiazine	52000-52999	Thiazine Ring: 	Groups introduced meta to the sulfur atom.	Medicinal usage, vat dyes, and microscopic stains.	C.I. 52015: Human toxicity - practically nontoxic[6]
Sulfur	53000-54999	Indeterminate		Dyes for cellulosic fibers.	
Lactone	55000-55999	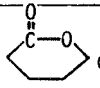 (Lactone Ring)	Hydroxyl group	Dyes for chrome-mordanted wools.	
Aminoketone	56000-56999	>C=O	Amino group or substituted amino group.	Vat dyes for wool	
Hydroxyketone	57000-57999	>C=O	Hydroxyl group	Mordant dyes	

Table 1. CLASSIFICATION OF DYES AND PIGMENTS IN COLOUR INDEX CATEGORIES (Concluded)

Class	I. C. Number	Chromophore	Auxochrome	Applications	Toxicity Information[1]
Anthraquinone	58000-72999	>C=O	NH_2, OH, NHR, NR_2, NHCOR, OR	Wide variety of uses. Vat, acid, mordant, disperse, solvent dyes and pigments. Also used in cosmetics and in microbiological stains.	Some may cause local sensitivity as an allergen.[6,7]
Indigoid	73000-73999	-C(=O)-C=C-C(=O)-	NH or S	Dyeing and printing of cellulosic and animal fibers.	Indigo carmine (C.I. 73015) consult latest government regulations before using in foods, drugs, cosmetics.[6]
Phthalocyanine	74000-74999	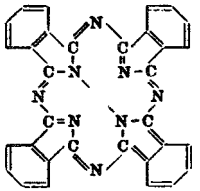		Pigments and vat dyes.	

Other categories not considered in this catalogue entry:

Natural Organic	75000-75999
Oxidation Bases	76000-76999
Inorganic Pigments	77000-77999

[1]Data are those which were readily available in standard reference books. The information is not comprehensive. When toxicity information for a specific dye is given, it should not be construed to apply to other dyes of the same category.

3. The dyes are arranged according to primary functional groups - amino, hydroxy, or both amino and hydroxy.

Within each subgroup further categorizations are made. In addition to providing the manufacturers with a practical and necessary coding system, utilization of the Colour Index system allows ready characterization of a color product based on its manufacturing code alone.

The complete list of products (Appendix B) considered is derived from the United States Tariff Commission report, "Synthetic Organic Chemicals, United States Production and Sales, 1972", with additional information from the preliminary data published from the same source for 1973. This list includes only the dyes and pigments to which a Colour Index number has been assigned and for which a chemical structure is known. Many commercially sold colors are proprietary in nature and their structures are not public information.

Appendix C lists alphabetically the manufacturers of dyes, pigments, and intermediates, and shows the dyes and pigments which they reported as products from their plants to the United States Tariff Commission in 1973.

The azo, anthraquinone, and stilbene groups of compounds from the classifications of products in Table 1 account for two-thirds of the total manufacturing production of dyes.(2) Approximately two-thirds of the dye production is consumed by the textile industry, one-sixth by the paper industry and the remainder is used for the production of pigments, dyeing of leather and coloring of plastics. About half of the organic pigments production is consumed by the printing industry; other major markets include surface coatings, plastics, textiles, and paper.(3)

Because of the many different uses, methods of application and service requirement, this industry sells thousands of products available as pastes, powders, lumps, concentrated solutions, and dispersions. About two-thirds of the pigment production is sold in the form of a concentrated dispersion or paste.

Companies

As mentioned above fifty-eight (58) companies are engaged in the manufacture of dyes, pigments, and/or intermediate materials with plants at eighty-seven (87) locations. These companies and their locations are listed alphabetically in Appendix D. The list is derived from the United States Tariff Commission Report, "Synthetic Organic Chemicals, United States Production and Sales, 1972"[3], and the corresponding preliminary data for 1973. Geographic locations were taken from the 1974 Directory of Chemical Producers, United States[4] with additional reference to more recent information directly from industry sources. No information is available regarding the manufacturing capacities of these companies. Some of these companies make dyes, pigments, and/or intermediates at more than one location. The various plants are listed according to geographic location in Appendix E. There is no doubt that New Jersey has the highest concentration of dye and pigment manufacturing operations, with a total of 30 of the 87 plants (34.5 percent) and six of the top seven manufacturers being represented in the area: Allied Chemical Corporation, American Cyanamid Company, E.I. duPont de Nemours & Company, GAF Corporation, Toms River Chemical Corporation and American Color and Chemical Corporation. Of these six leading manufacturers with New Jersey locations, four have plants located elsewhere as well. The remaining seventh large manufacturer, ICI United States, Inc., has its only colors manufacturing plant in Massachusetts. These top seven manufacturers are considered to account for close to 90 percent of organic dye and pigment production.

Environmental Impact

Organic dyes and pigments manufacture is characterized by emissions of solid, liquid, and gaseous wastes. Some of the gaseous emissions which have been indicated are nitrogen oxides, sulfur oxides, hydrogen sulfide, hydrogen chloride, and organic vapors including amines, phosgene, and formaldehyde. Solid wastes are often in the form of distillation residues, particulates recovered in baghouses, filter paper, and activated carbon.

Although all three types of waste streams are generated in dye manufacturing, the most serious emission problems are those presented by large volumes of toxic liquid wastes. Liquid wastes originate from chemical reaction by-products; physical separations such as crystallization, filtration, and washing; and from equipment cleaning procedures. These liquid waste streams consist of brine solutions and dilute streams of acids and bases contaminated with toxic and/or explosive organic compounds which are often highly colored dyes or intermediates. The waste solutions also contain metals or metal salts used as catalysts for various reactions. The specific compositions of waste streams vary widely with the dye or pigment manufactured and cannot be adequately represented by a typical composition. Although an accurate assessment and characterization of the wastes produced in this industry is needed, none was available from the open literature.[2]

Some companies have found it unprofitable to install needed waste disposal and control facilities and have elected to terminate operation of the offending process. Thus, GAF Corporation has recently stopped their manufacture of copper phthalocyanine (C.I. 74160) in part because of the formidable waste disposal problems associated with the manufacture of this high quality blue pigment.[8]

On the other hand, the Allied Chemical Corporation, after a survey of the waste effluent problems at its dye manufacturing facility in Buffalo, New York, elected about five years ago to spend $40 million over a period of several years to cope with the effluents in an ecologically acceptable way.

Bibliography

(1) Chemical Marketing Reporter, 204 (27), 9 (1973).

(2) A Study of Hazardous Waste Materials, Hazardous Effects and Disposal Methods, Booz-Allen Applied Research, Inc., Bethesda, Maryland, July 1973.

(3) Synthetic Organic Chemicals, United States Production and Sales, 1972, United States Tariff Commission, TC Publication 681, Washington, D. C., 1974, pp 55-100.

(4) Directory of Chemical Producers, United States of America, Chemical Information Services, Stanford Research Institute, Menlo Park, California, 1974.

(5) Colour Index, Third Edition, Volume 4, The Society of Dyers and Colourists, Yorkshire, England, 1971.

(6) The Merck Index, Eighth Edition, Merck & Co., Inc., Rahway, New Jersey, 1968.

(7) Sax, N. Irving, Dangerous Properties of Industrial Materials, Fourth Edition, Van Nostrand Reinhold Company, New York, 1975.

(8) Industry source, private communication to Battelle.

INDUSTRY ANALYSIS

To obtain information regarding the processes used by the organic dyes and pigments industry in a brief time span has been very difficult. Most of the information obtained is based on that found in the Colour Index. This basic compendium has not been cited in any of the process descriptions in the interest of brevity, and the reference to it here serves instead. Further, more extensive searching would doubtlessly bring to light a great deal more information. In particular, recourse to reports gathered by American and British intelligence teams from German companies at the end of hostilities in World War II in 1946 would no doubt be of special value. The amount of information available from these sources and from original publications would be manifestly much greater than what is presented here. Because secondary sources have been used, both the process descriptions and flow sheets are necessarily incomplete. No EPA Source Classification Code exists for any of the processes described since this industry has not yet been considered in the NEDS system.

Diagrams describing synthesis of intermediate chemicals, process flowsheets, and process descriptions follow. Figures 1-1 through 1-42 provide a series of diagrams illustrating the progressive steps required to transform purchased starting materials into a great variety of intermediate chemical compounds used in making dyes and pigments. Table 2 contains a glossary of terms used in preparing the diagrams of the synthesis of intermediate compounds.

Forty-eight different processes were identified in summarizing the operations carried out by the industry. These processes are presented in process flow charts (Figures 2-1 through 2-48) and in the corresponding process descriptions. The processes describe mainly operations which convert intermediates into dyes or pigments.

An attempt was made to link the intermediate compounds described in the synthesis diagrams to the 48 defined processes. The number of the dye-making process in which a particular intermediate is used is printed above that chemical in the synthesis diagrams. There are also sequences in the synthesis diagrams which are defined in the process descriptions and process flow charts. To indicate these common processing sequences, the process number is printed above the chemical synthesis arrow.

Table 2. GLOSSARY OF TERMS USED IN DIAGRAMS FOR SYNTHESIS OF INTERMEDIATES

Aa	Anthranilic acid
AcCl	Acetyl chloride
Ac_2O	Acetic anhydride
ANBS	Amino nitrobenzenesulfonic acid
AMS	α-Methyl styrene
AP	Aminophenol
AT	Aminotoluene
BOA	3-Hydroxyanthracene-2-carboxylic acid
BON	3-Hydroxy-2-naphthoic acid
CA	Chloracetic acid
CH	Cyclohexanone
DAT	Diaminotoluene
DCB	Dichlorobenzene
DEABH	4,4'-bis (Diethylamino) benzhydrol
DMA	Dimethylaniline
EA	Ethanolamine
EO	Ethylene oxide
EtOH	Ethanol
EtCl	Ethylene chloride
HAc	Acetic acid
Hyd	Hydrolysis
J Acid	6-Amino-1-naphthol-3-sulfonic acid
MAA	Methylacetoacetate
MDEA	4,4'-Methylene-bis-(N,N-diethylaniline)
NBC	Nitrobenzoyl chloride
NDA	4-Nitroso-dimethylaniline
NDS	Naphthalenedisulfonic acid
NEA	4-Nitroso diethylaniline
Nitr'n	Nitration
NP	Nitrosophenol
Oxid'n	Oxidation
PABA	4-Aminobenzoic acid
Red'n	Reduction
SAA	Sulfoanthranilic acid
Sap'n	Saponification
Sulfon'n	Sulfonation
TASA	Toluenesulfonamide
Tosyl Cl	4-Toluene sulfonyl chloride
VCN	Acrylonitrile

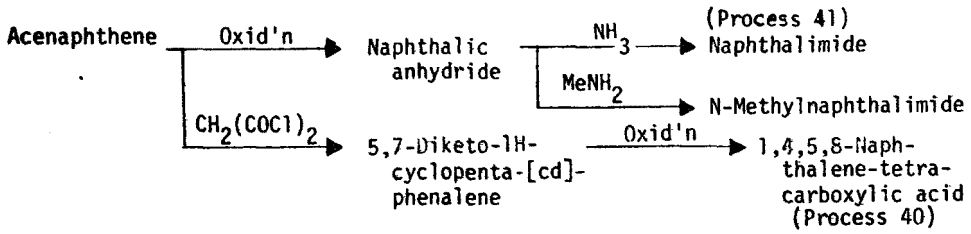

FIGURE 1-1. SYNTHESIS OF VARIOUS INTERMEDIATES FOR DYE AND PIGMENT PRODUCTION FROM PURCHASED STARTING MATERIAL: ACENAPHTHENE

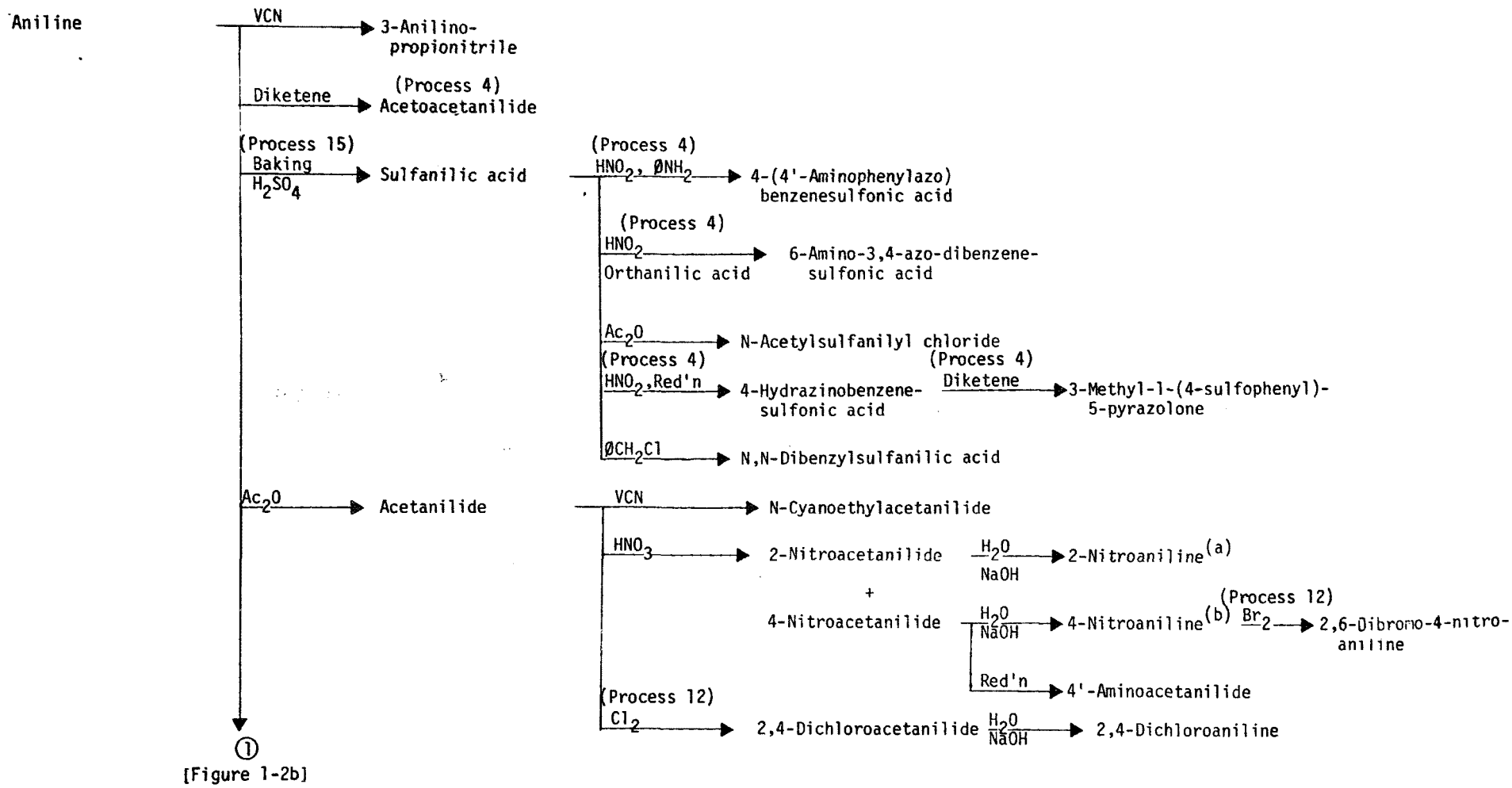

FIGURE 1-2a. SYNTHESIS OF VARIOUS INTERMEDIATES FOR DYE AND PIGMENT PRODUCTION FROM PURCHASED MATERIAL: ANILINE

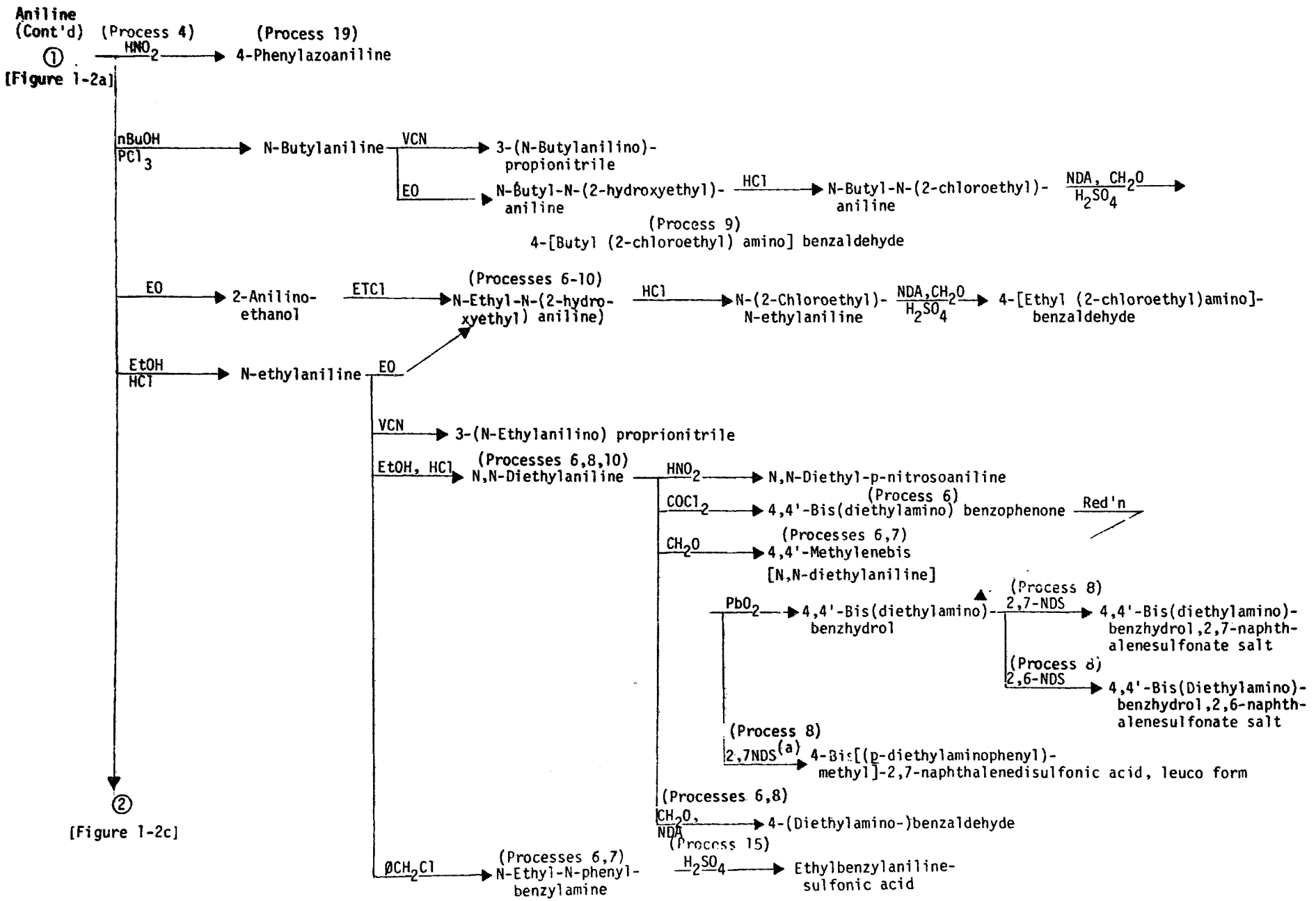

FIGURE 1-2b. SYNTHESIS OF VARIOUS INTERMEDIATES FOR DYE AND PIGMENT PRODUCTION FROM PRUCHASED STARTING MATERIAL: ANILINE (Continued)

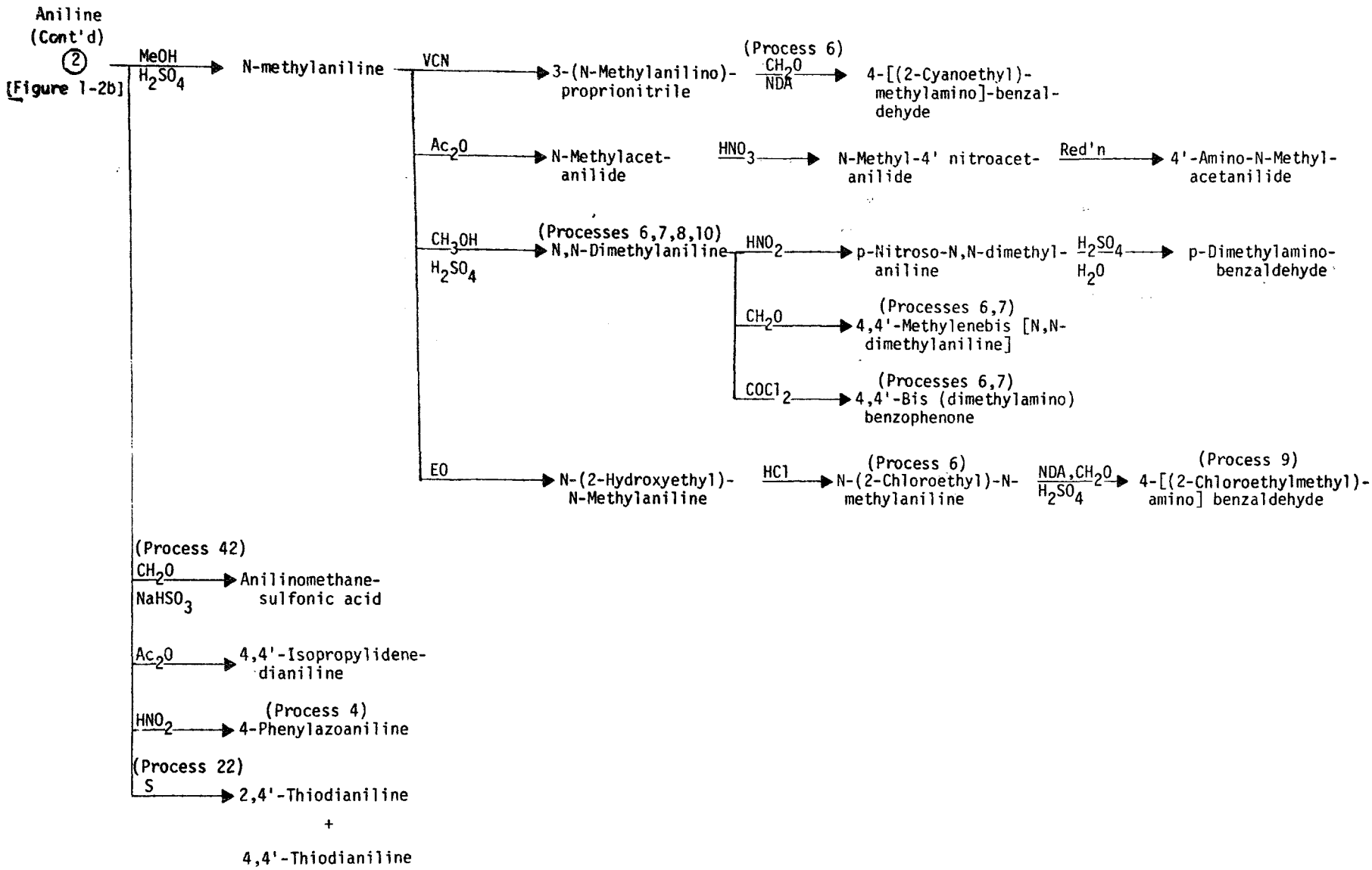

FIGURE 1-2c. SYNTHESIS OF VARIOUS INTERMEDIATES FOR DYE AND PIGMENT PRODUCTION FROM PURCHASED STARTING MATERIAL: ANILINE (Continued)

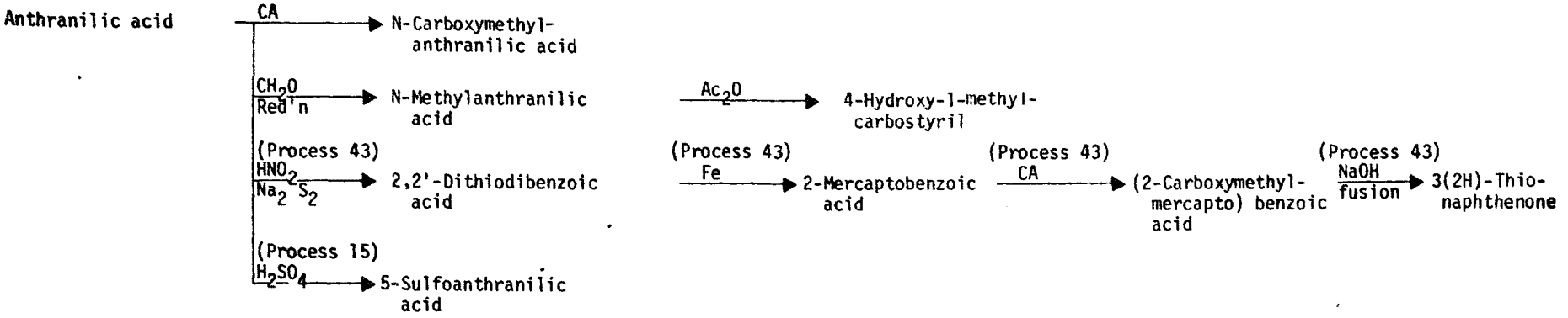

FIGURE 1-3. SYNTHESIS OF VARIOUS INTERMEDIATES FOR DYE AND PIGMENT PRODUCTION FROM PURCHASED STARTING MATERIAL: ANTHRANILIC ACID

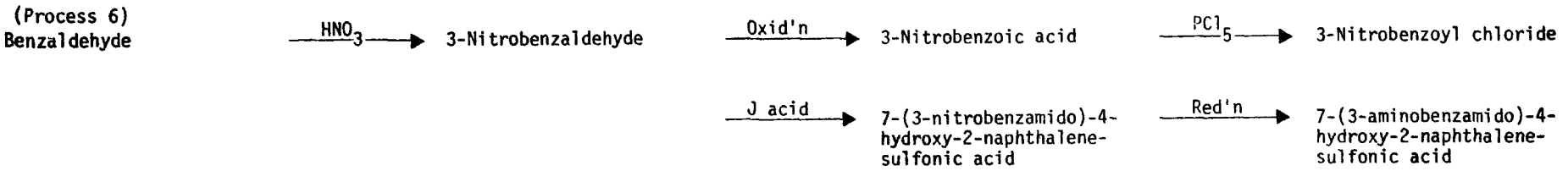

FIGURE 1-4. SYNTHESIS OF VARIOUS INTERMEDIATES FOR DYE AND PIGMENT PRODUCTION FROM PURCHASED STARTING MATERIAL: BENZALDEHYDE

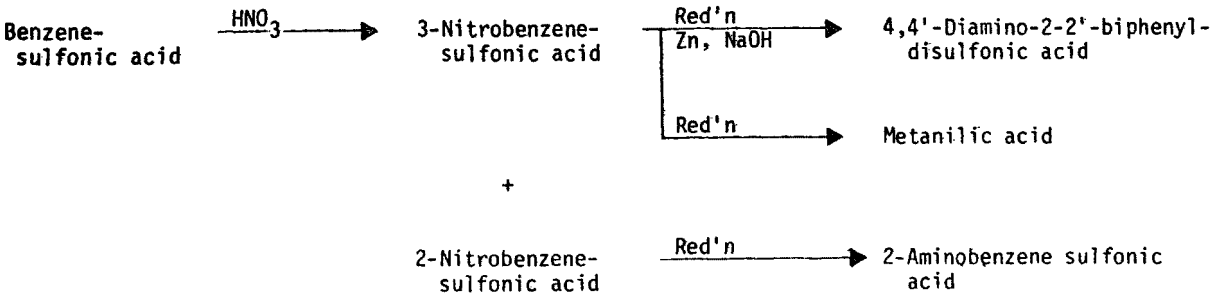

FIGURE 1-5. SYNTHESIS OF VARIOUS INTERMEDIATES FOR DYE AND PIGMENT PRODUCTION FROM PURCHASED STARTING MATERIAL: BENZENESULFONIC ACID

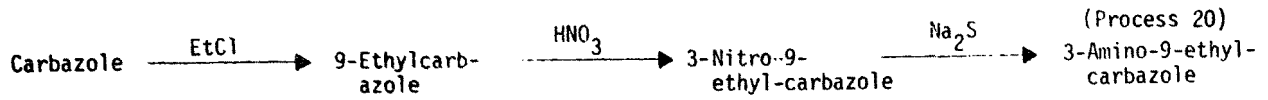

FIGURE 1-6. SYNTHESIS OF VARIOUS INTERMEDIATES FOR DYE AND PIGMENT PRODUCTION FROM PURCHASED STARTING MATERIAL: CARBAZOLE

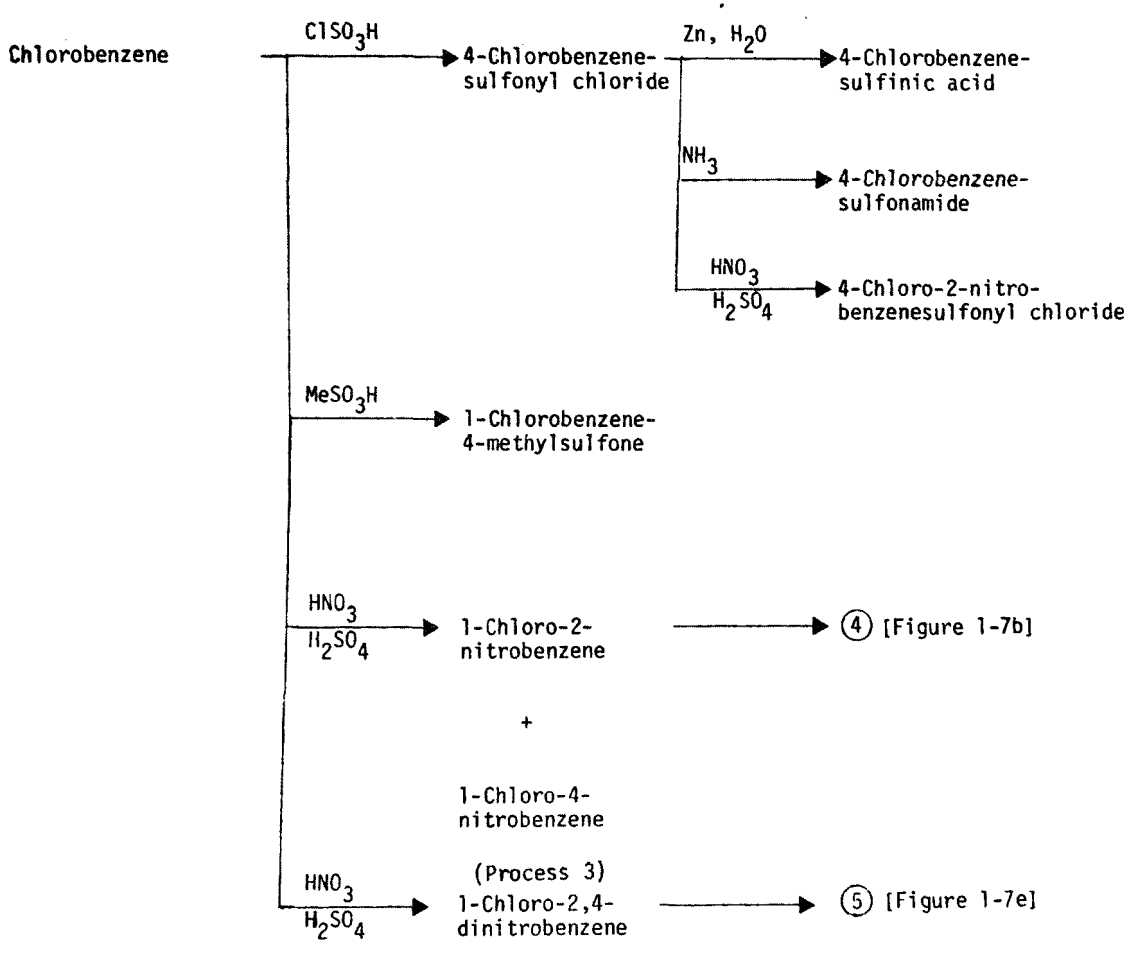

FIGURE 1-7a. SYNTHESIS OF VARIOUS INTERMEDIATES FOR DYE AND PIGMENT PRODUCTION FROM PURCHASED STARTING MATERIAL: CHLOROBENZENE

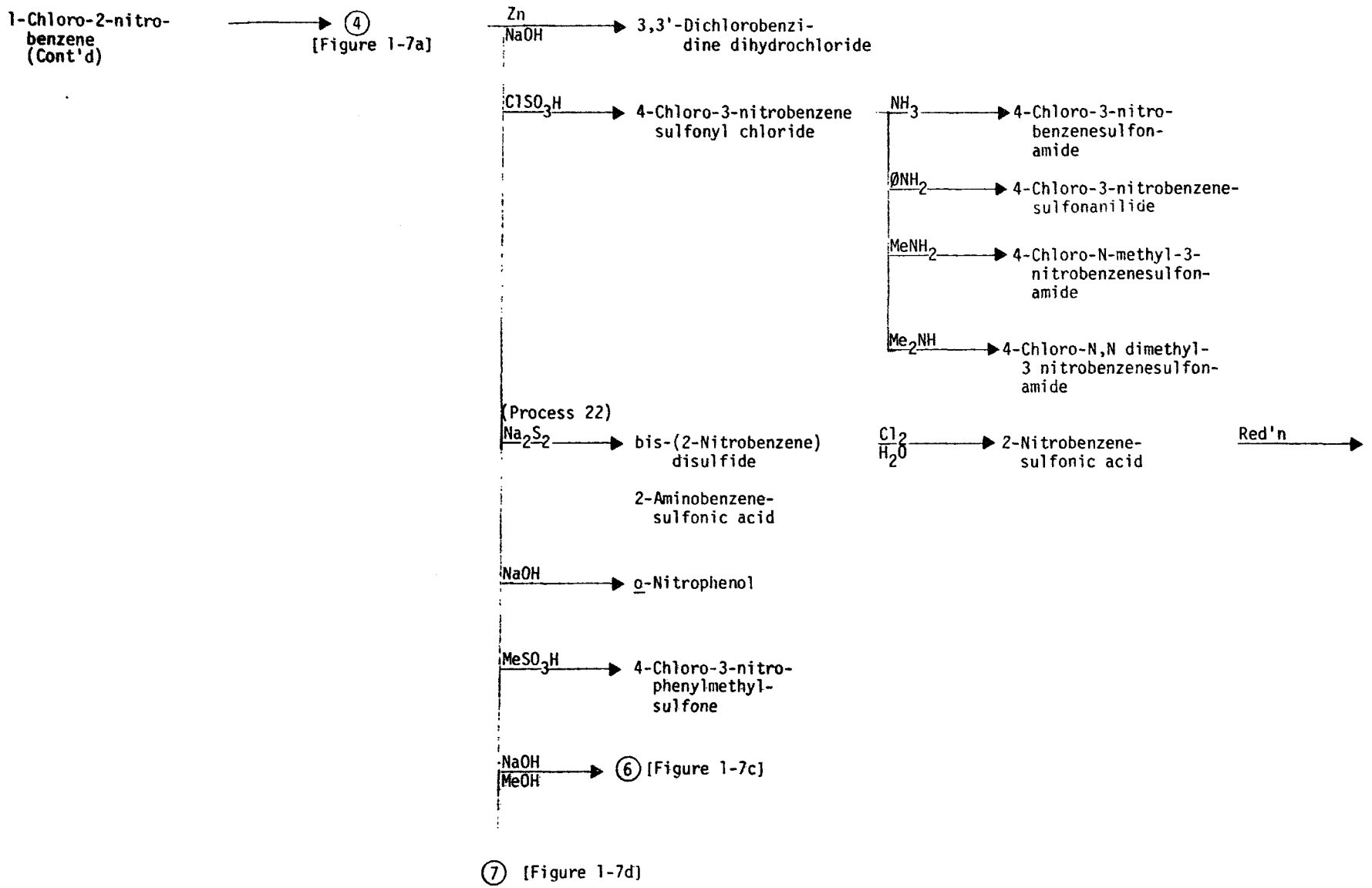

FIGURE 1-7b. SYNTHESIS OF VARIOUS INTERMEDIATES FOR DYE AND PIGMENT PRODUCTION FROM PURCHASED STARTING MATERIAL: CHLOROBENZENE (Continued)

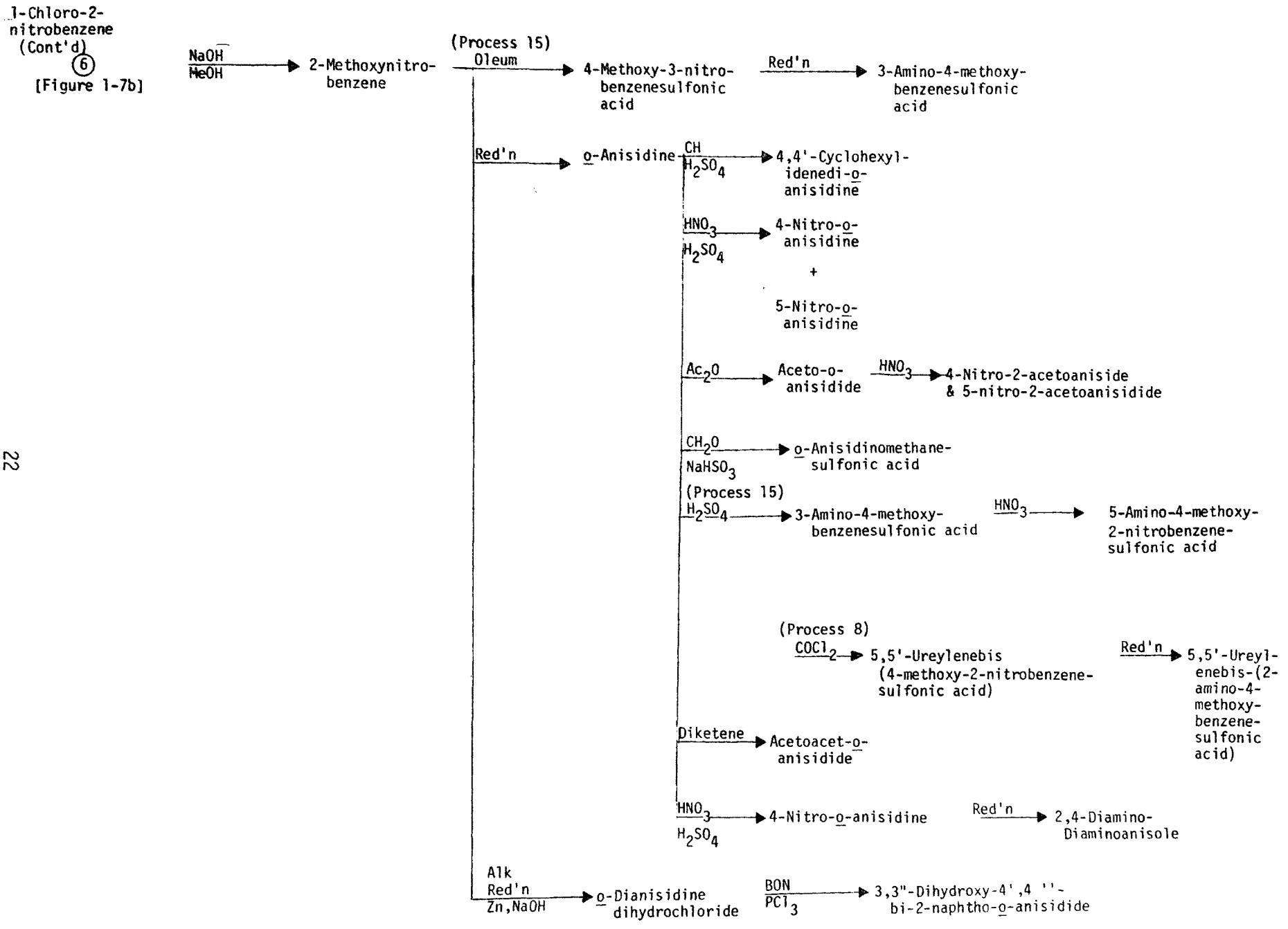

FIGURE 1-7c. SYNTHESIS OF VARIOUS INTERMEDIATES FOR DYE AND PIGMENT PRODUCTION FROM PURCHASED STARTING MATERIAL: CHLOROBENZENE (Continued)

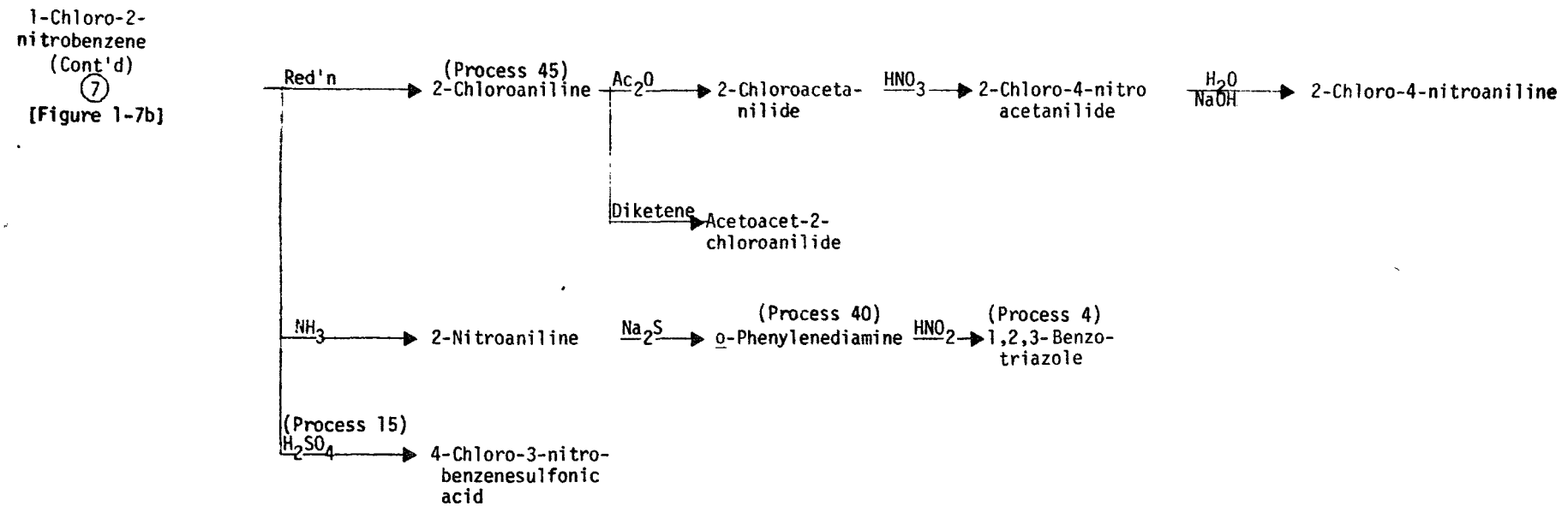

FIGURE 1-7d. SYNTHESIS OF VARIOUS INTERMEDIATES FOR DYE AND PIGMENT PRODUCTION FROM STARTING MATERIAL: CHLOROBENZENE, (Continued)

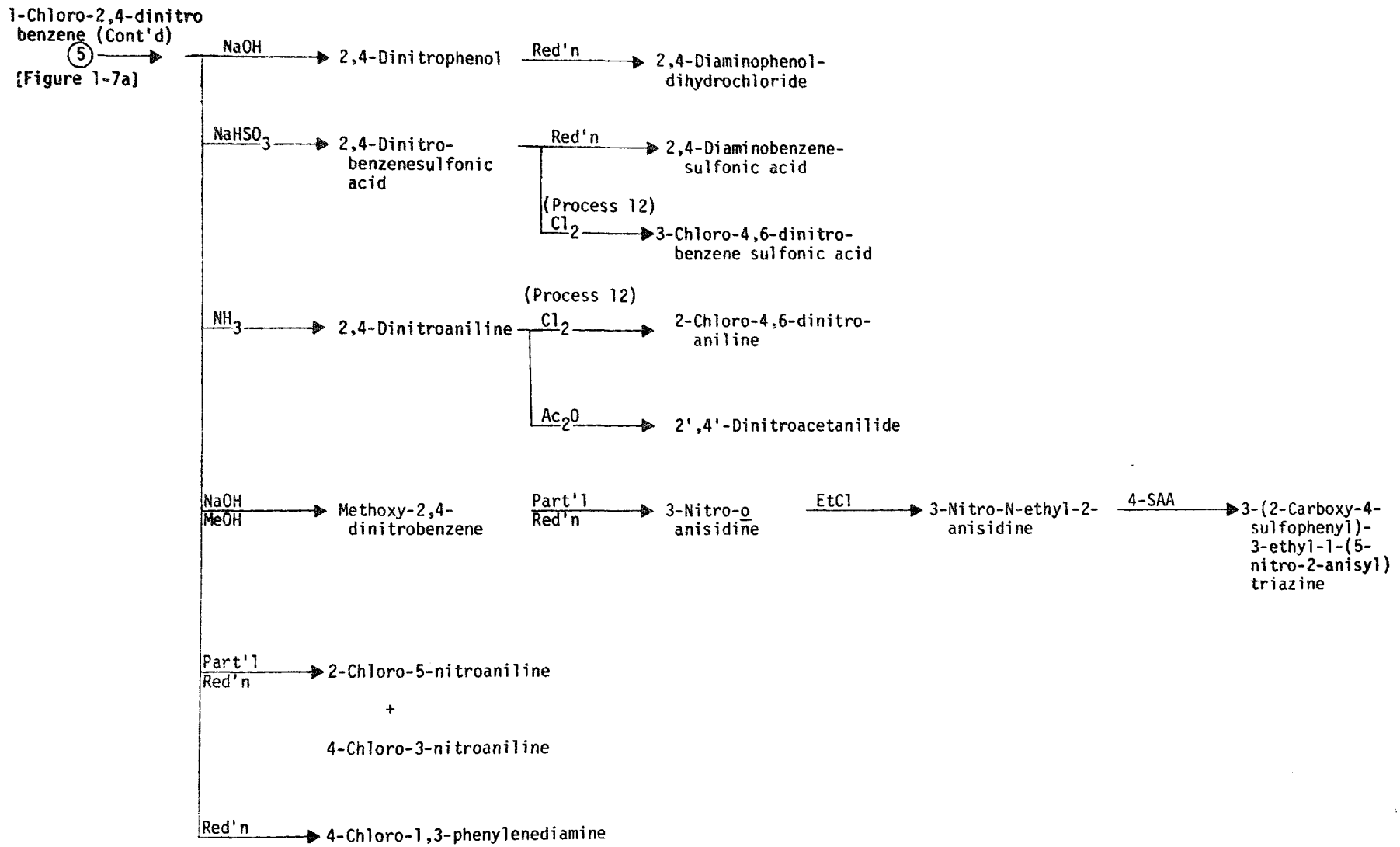

FIGURE 1-7e. SYNTHESIS OF VARIOUS INTERMEDIATES FOR DYE AND PIGMENT PRODUCTION FROM PURCHASED STARTING MATERIAL: CHLOROBENZENE (Continued)

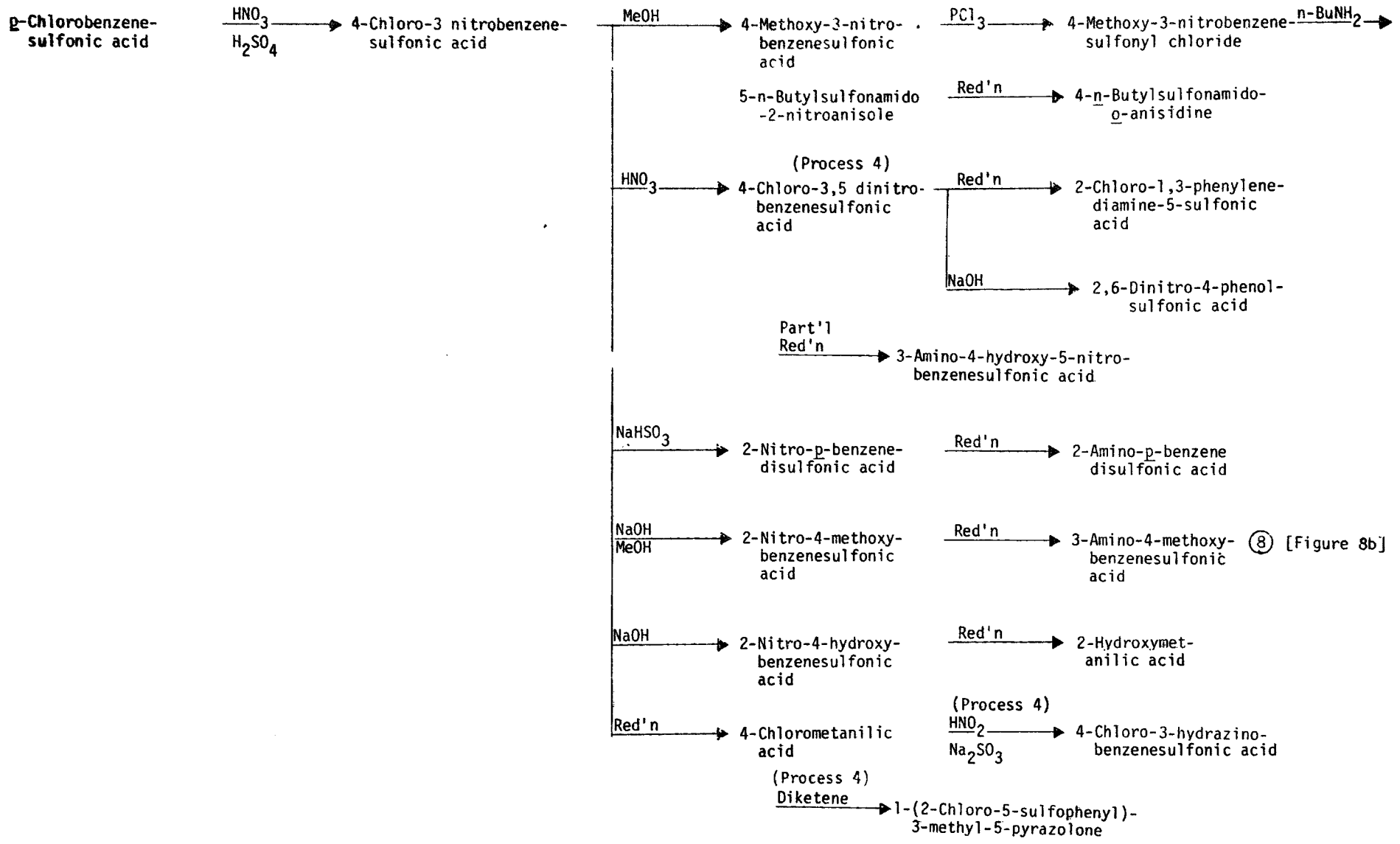

FIGURE 1-8a. SYNTHESIS OF VARIOUS INTERMEDIATES FOR DYE AND PIGMENT PRODUCTION FROM PURCHASED STARTING MATERIAL: p-CHLOROBENZENESULFONIC ACID

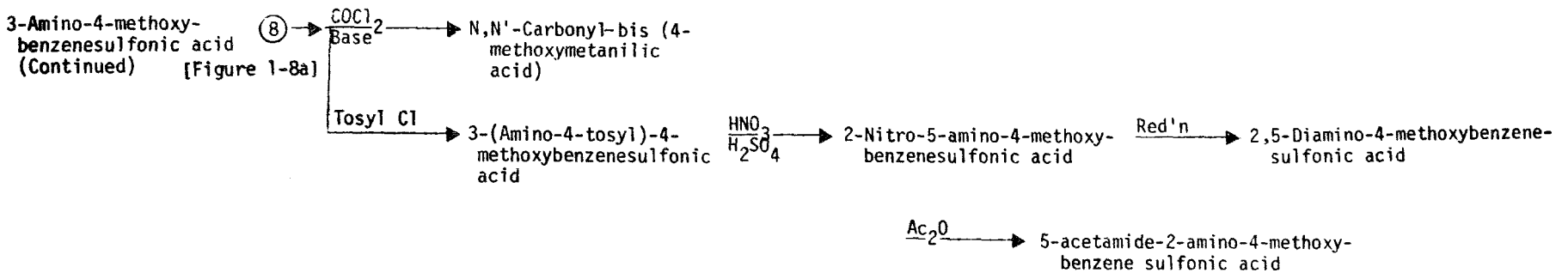

FIGURE 1-8b. SYNTHESIS OF VARIOUS INTERMEDIATES FOR DYE AND PIGMENT PRODUCTION FROM PURCHASED STARTING MATERIAL: p-CHLOROBENZENESULFONIC ACID (Continued)

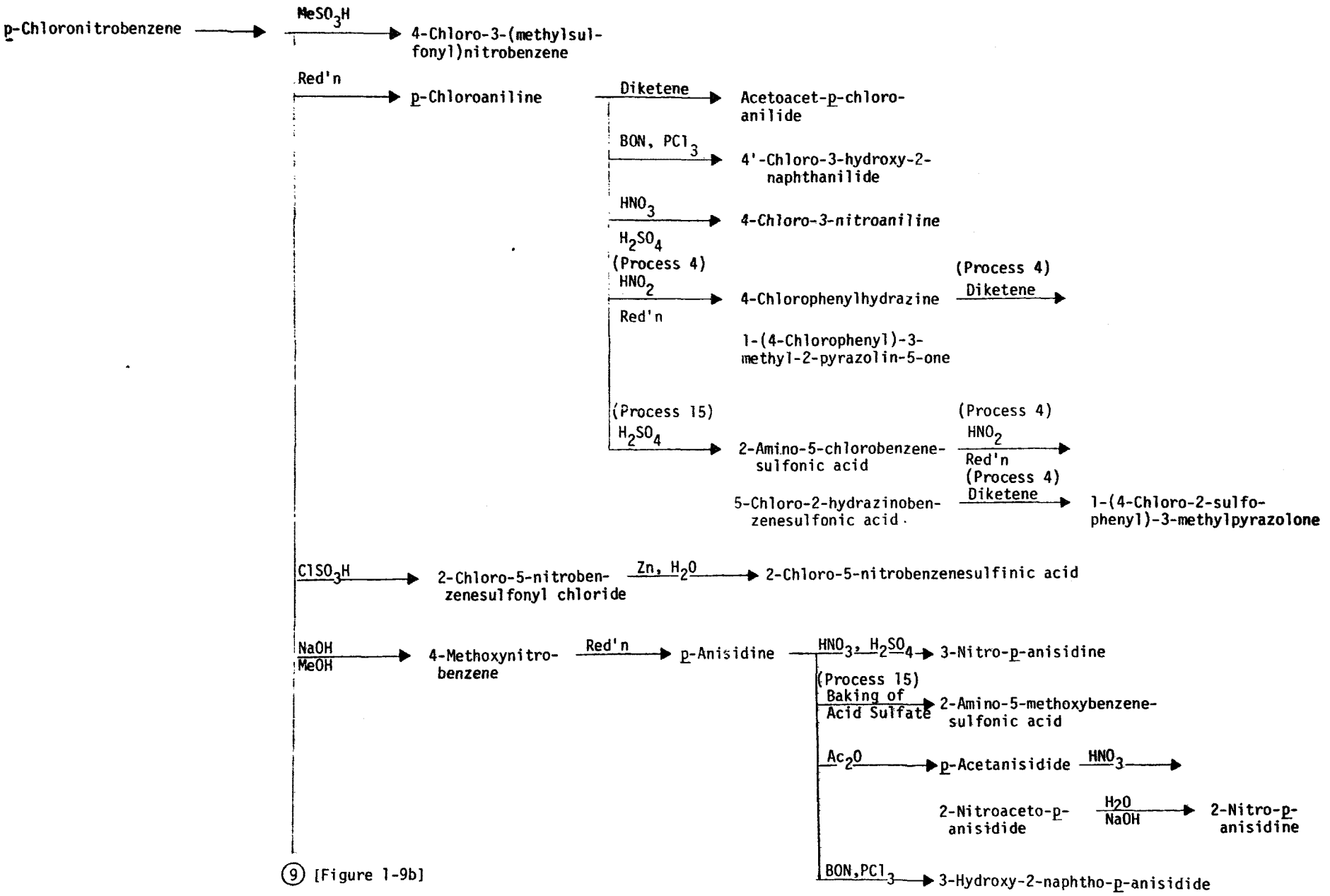

FIGURE 1-9a. SYNTHESIS OF VARIOUS INTERMEDIATES FOR DYE AND PIGMENT PRODUCTION FROM PURCHASED STARTING MATERIAL: p-CHLORONITROBENZENE

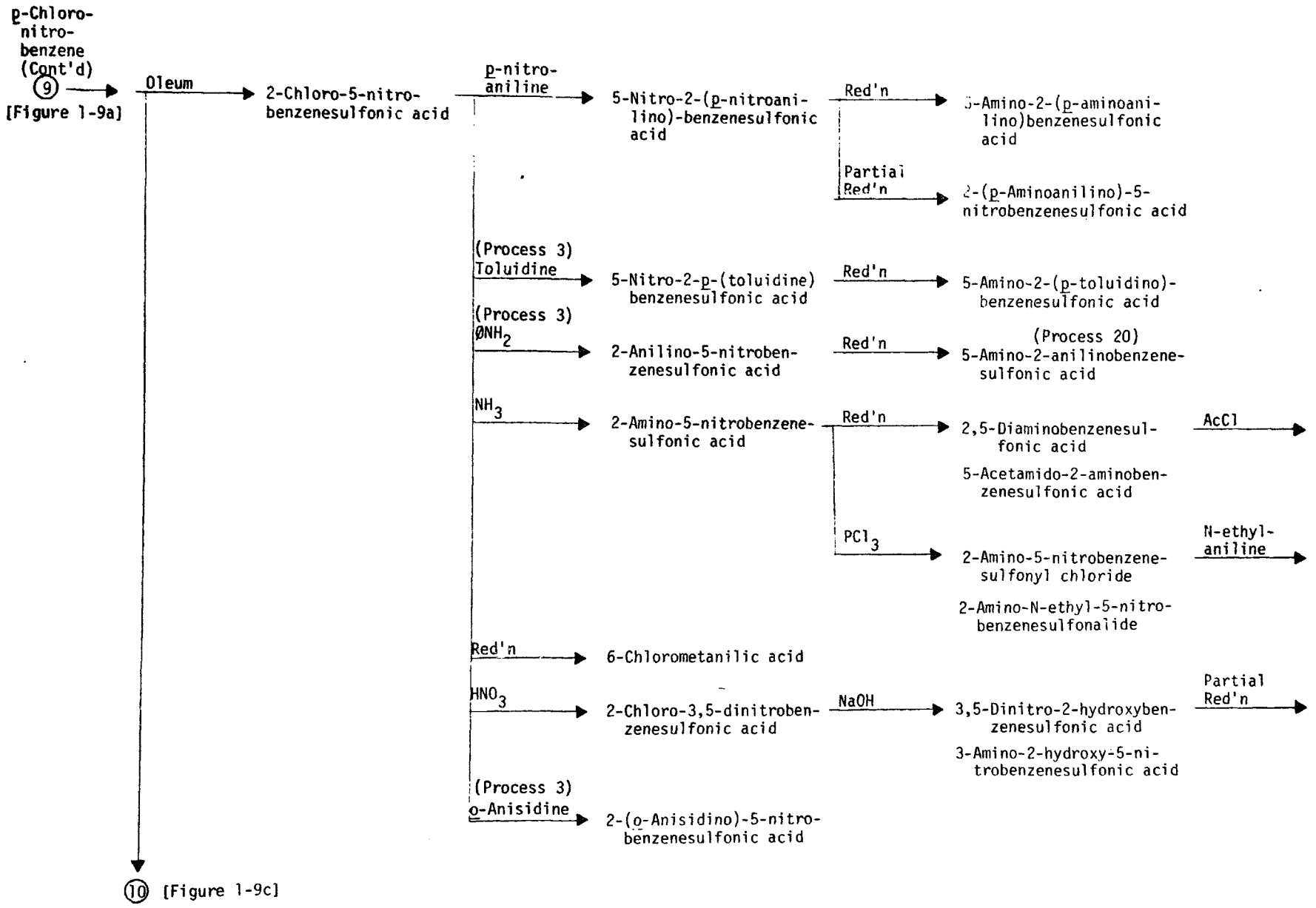

FIGURE 1-9b. SYNTHESIS OF VARIOUS INTERMEDIATES FOR DYE AND PIGMENT PRODUCTION FROM PURCHASED STARTING MATERIAL: p-CHLORONITROBENZENE (Continued)

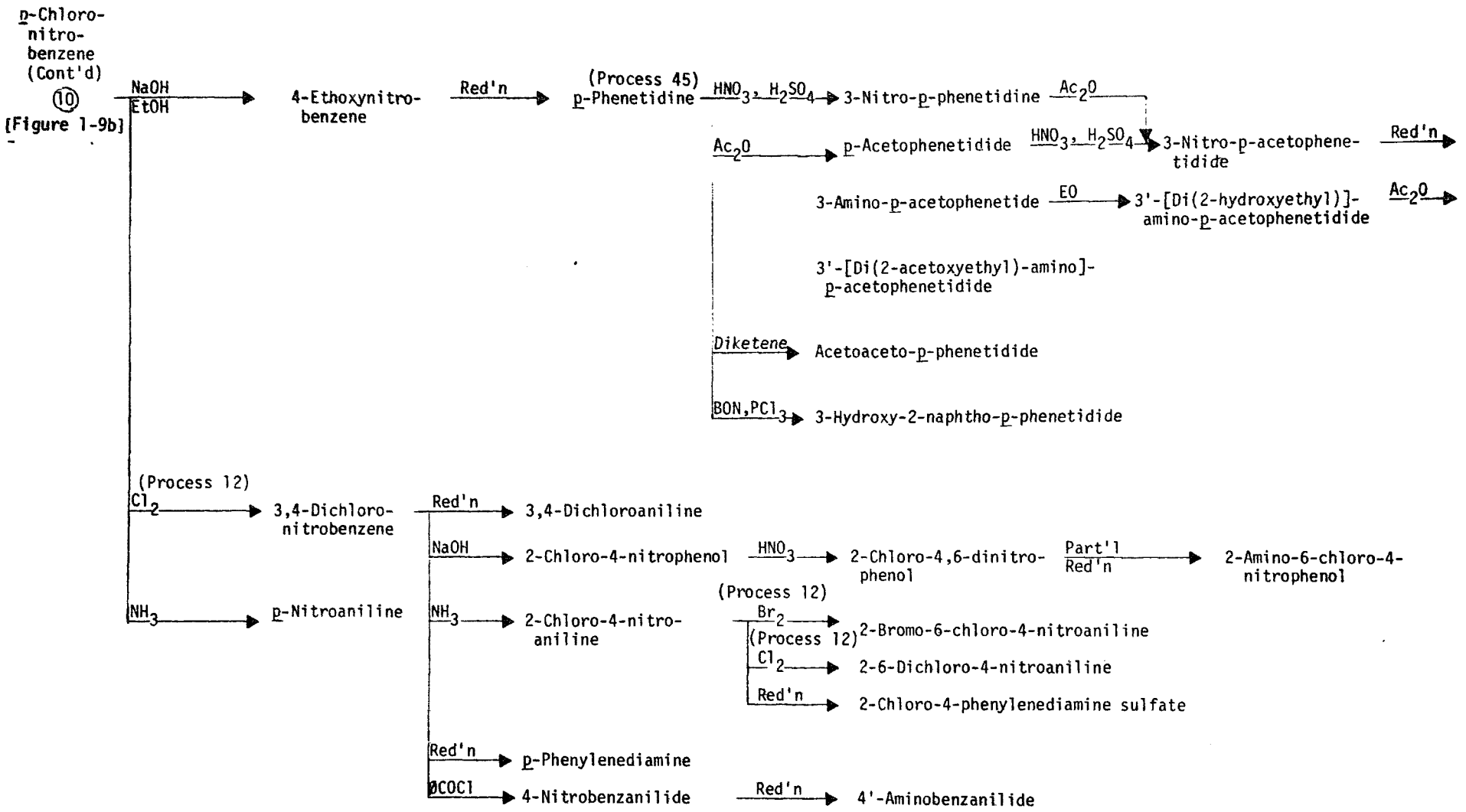

FIGURE 1-9c. SYNTHESIS OF VARIOUS INTERMEDIATES FOR DYE AND PIGMENT PRODUCTION FROM PURCHASED STARTING MATERIAL: p-CHLORONITROBENZENE (Continued)

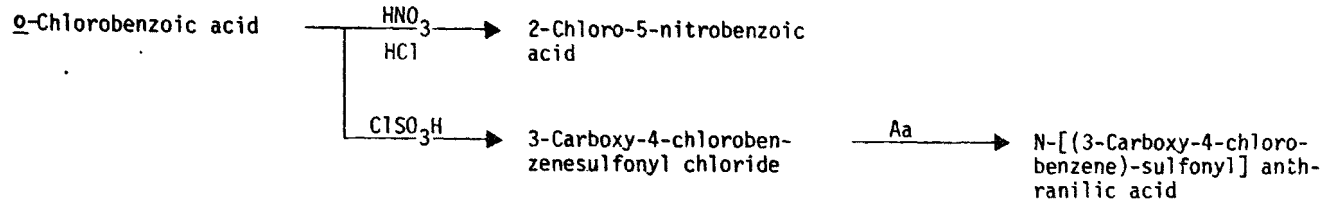

FIGURE 1-10. SYNTHESIS OF VARIOUS INTERMEDIATES FOR DYE AND PIGMENT PRODUCTION FROM PURCHASED STARTING MATERIAL: o-CHLOROBENZOIC ACID

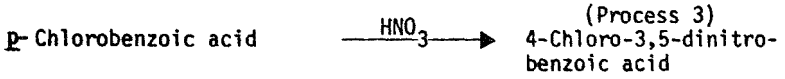

FIGURE 1-11. SYNTHESIS OF VARIOUS INTERMEDIATES FOR DYE AND PIGMENT PRODUCTION FROM PURCHASED STARTING MATERIAL: p-CHLOROBENZOIC ACID

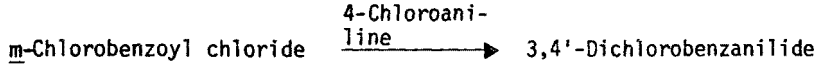

FIGURE 1-12. SYNTHESIS OF VARIOUS INTERMEDIATES FOR DYE AND PIGMENT PRODUCTION FROM PURCHASED STARTING MATERIAL: m-CHLOROBENZOYL CHLORIDE

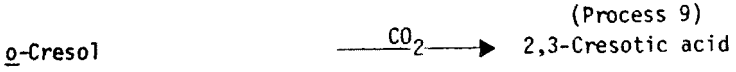

FIGURE 1-13. SYNTHESIS OF VARIOUS INTERMEDIATES FOR DYE AND PIGMENT PRODUCTION FROM PURCHASED STARTING MATERIAL: o-CRESOL

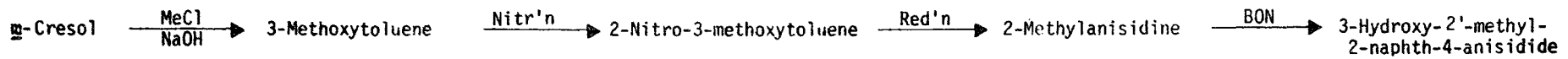

FIGURE 1-14. SYNTHESIS OF VARIOUS INTERMEDIATES FOR DYE AND PIGMENT PRODUCTION FROM PURCHASED STARTING MATERIAL: m-CRESOL

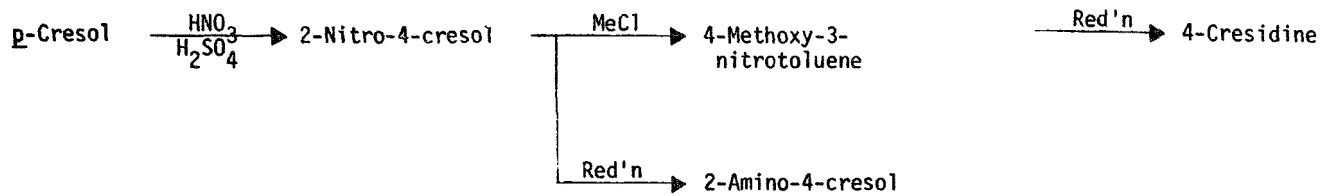

FIGURE 1-15. SYNTHESIS OF VARIOUS INTERMEDIATES FOR DYE AND PIGMENT PRODUCTION FROM PURCHASED STARTING MATERIAL: p-CRESOL

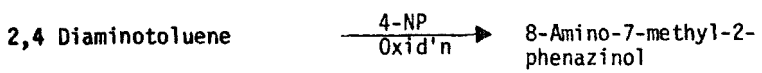

FIGURE 1-16. SYNTHESIS OF VARIOUS INTERMEDIATES FOR DYE AND PIGMENT PRODUCTION FROM PURCHASED STARTING MATERIAL: 2,4-DIAMINOTOLUENE

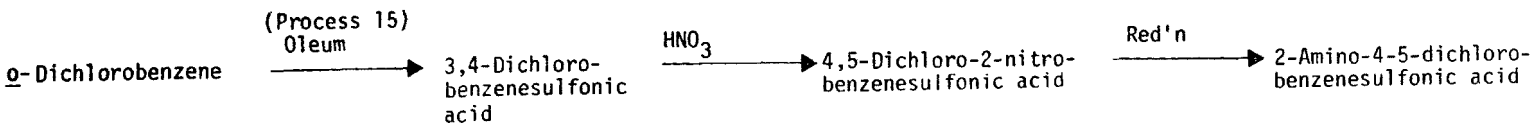

FIGURE 1-17. SYNTHESIS OF VARIOUS INTERMEDIATES FOR DYE AND PIGMENT PRODUCTION FROM PURCHASED STARTING MATERIAL: o-DICHLOROBENZENE

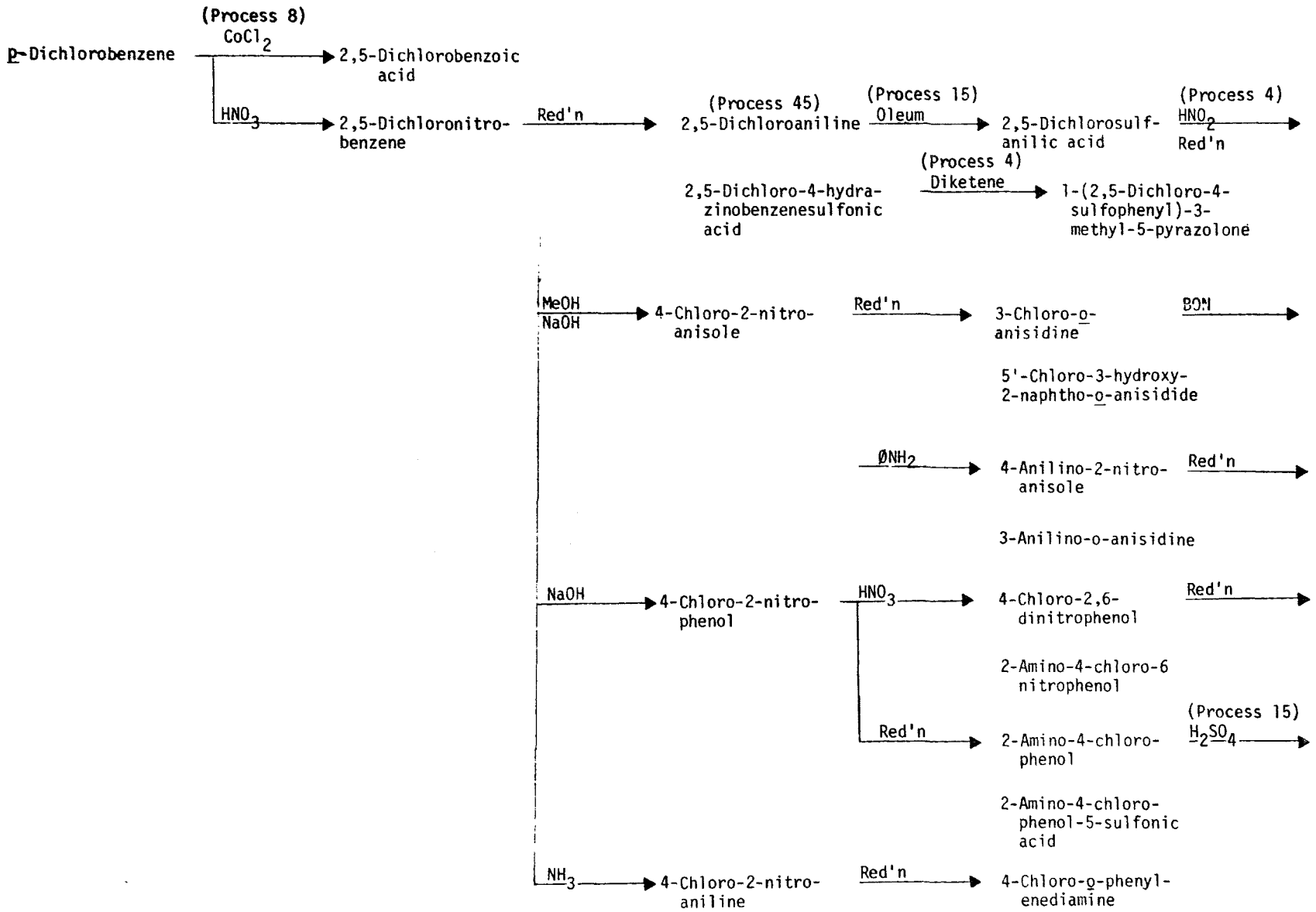

FIGURE 1-18. SYNTHESIS OF VARIOUS INTERMEDIATES FOR DYE AND PIGMENT PRODUCTION PURCHASED STARTING MATERIAL: p-DICHLOROBENZENE

Diphenylamine —4-NP→ N(4-Anilinophenyl)-4-quinone imine

FIGURE 1-19. SYNTHESIS OF VARIOUS INTERMEDIATES FOR DYE AND PIGMENT PRODUCTION FROM PURCHASED STARTING MATERIAL: DIPHENYLAMINE

Hydroquinone

- —EtOH, HCl→ 4-Diethoxybenzene —HNO_3→ 2,5-Diethoxynitrobenzene —Red'n→ 2,5-Diethoxyaniline —ØCOCl→ 2',5'-Diethoxybenzanilide —HNO_3→
  - 2',5'-Diethoxy-4'-nitrobenzanilide —Red'n→ 4'-Amino-2',5'-Diethoxybenzanilide
- —MeOH, HCl→ 4-Dimethoxybenzene —HNO_3→ 2,5-Dimethoxynitrobenzene —Red'n→ 2,5-Dimethoxyaniline —Ac_2O→ 2,5-Dimethoxyacetanilide —HNO_3→
  - 2,5-Dimethoxyaniline → (11) [See below]
  - 2,5-Dimethoxy-4-nitroacetanilide —H_2O, NaOH→ 2,5-Dimethoxy-4-nitroaniline —HNO_2, $CuCl_2$→ 4-Chloro-2,5-dimethoxynitrobenzene —Red'n→
  - 4-Chloro-2,5-dimethoxyaniline
    - —BON, PCl_3→ 4'-Chloro-3-hydroxy-2',5'-dimethoxy-2-naphthanilide
    - —Diketene→ 4'-Chloro-2',5'-dimethoxyacetoacetanilide
- —$ØNH_2$→ p-Anilinophenol

2,5-Dimethoxyaniline (11) [See above] (cont'd)

- —$ØSO_2Cl$→ 2',5'-Dimethoxybenzenesulfonamide —HNO_3→ 2',5'-Dimethoxy-4'-nitrobenzenesulfonamide —Red'n→ 4'-Amino-2',5'-dimethoxybenzenesulfonamide
- —ØCOCl→ 2',5'-Dimethoxybenzanilide —HNO_3→ 2',5'-Dimethoxy-4'-nitrobenzanilide —Red'n→ 4'-Amino-2',5'-dimethoxybenzanilide

FIGURE 1-20. SYNTHESIS OF VARIOUS INTERMEDIATES FOR DYE AND PIGMENT PRODUCTION FROM PURCHASED STARTING MATERIAL: HYDROQUINONE

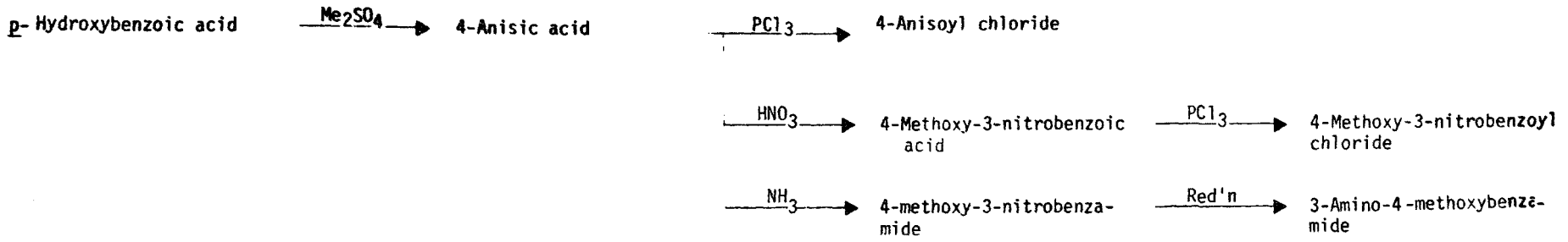

FIGURE 1-21. SYNETHESIS OF VARIOUS INTERMEDIATES FOR DYE AND PIGMENT PRODUCTION FROM PURCHASED STARTING MATERIAL: P-HYDROXYBENZOIC ACID

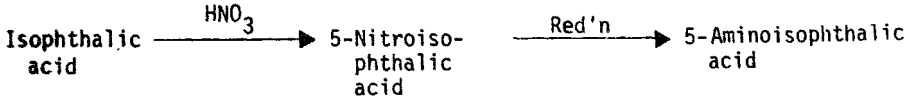

FIGURE 1-22. SYNTHESIS OF VARIOUS INTERMEDIATES FOR DYE AND PIGMENT PRODUCTION FROM PURCHASED STARTING MATERIAL: ISOPHTHALIC ACID

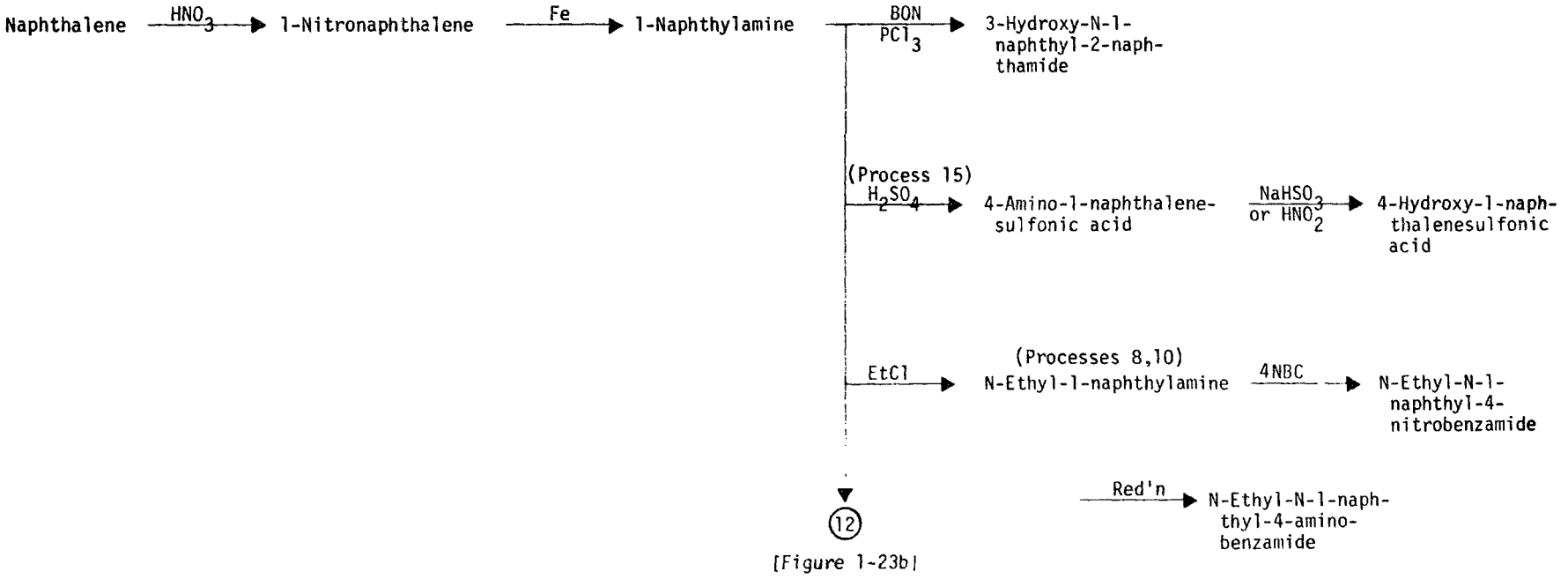

FIGURE 1-23a. SYNTHESIS OF VARIOUS INTERMEDIATES FOR DYE AND PIGMENT PRODUCTION FROM PURCHASED STARTING MATERIAL: NAPHTHALENE

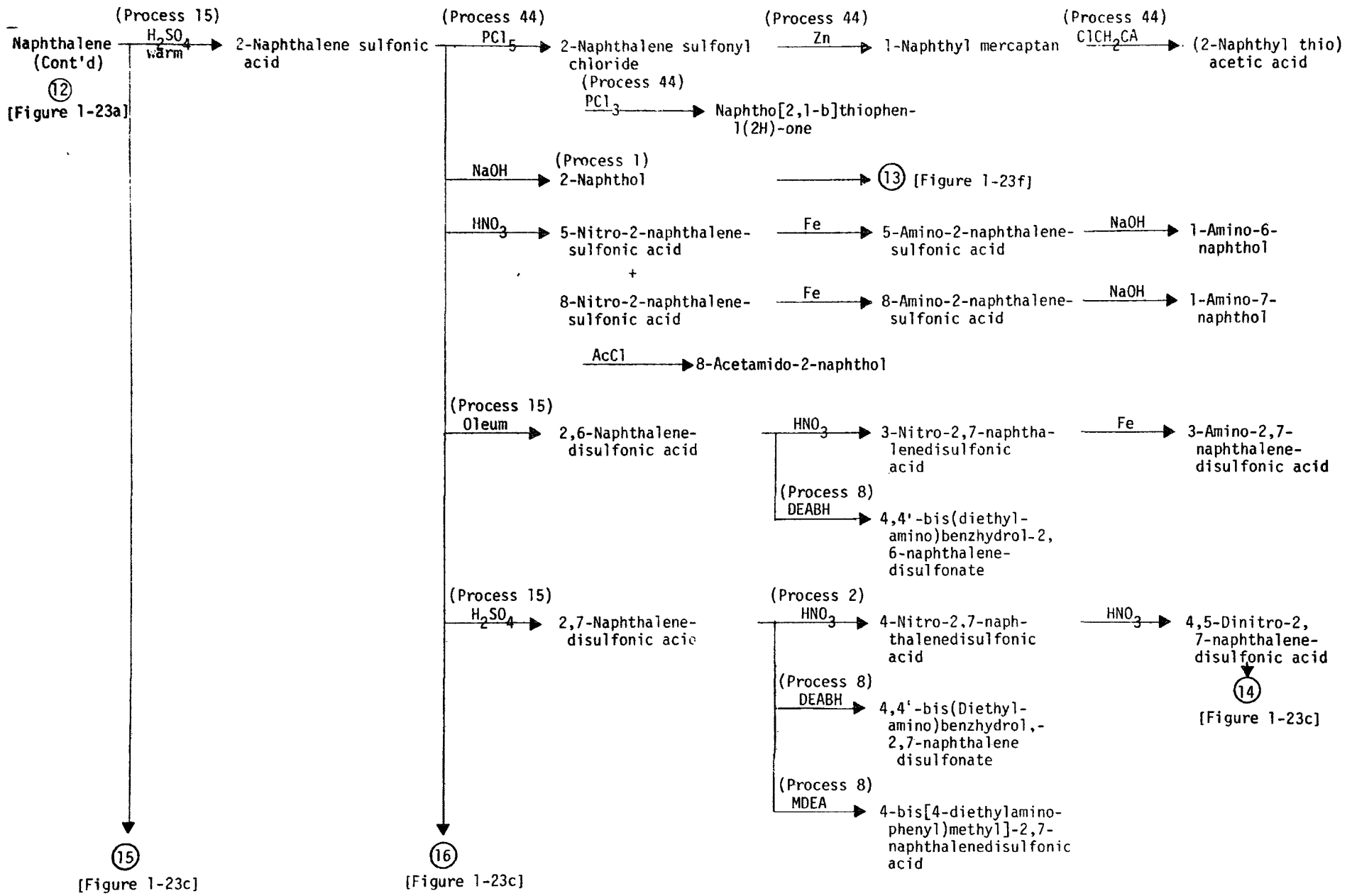

FIGURE 1-23b. SYNTHESIS OF VARIOUS INTERMEDIATES FOR DYE AND PIGMENT PRODUCTION FROM PURCHASED STARTING MATERIAL: NAPHTHALENE (Continued)

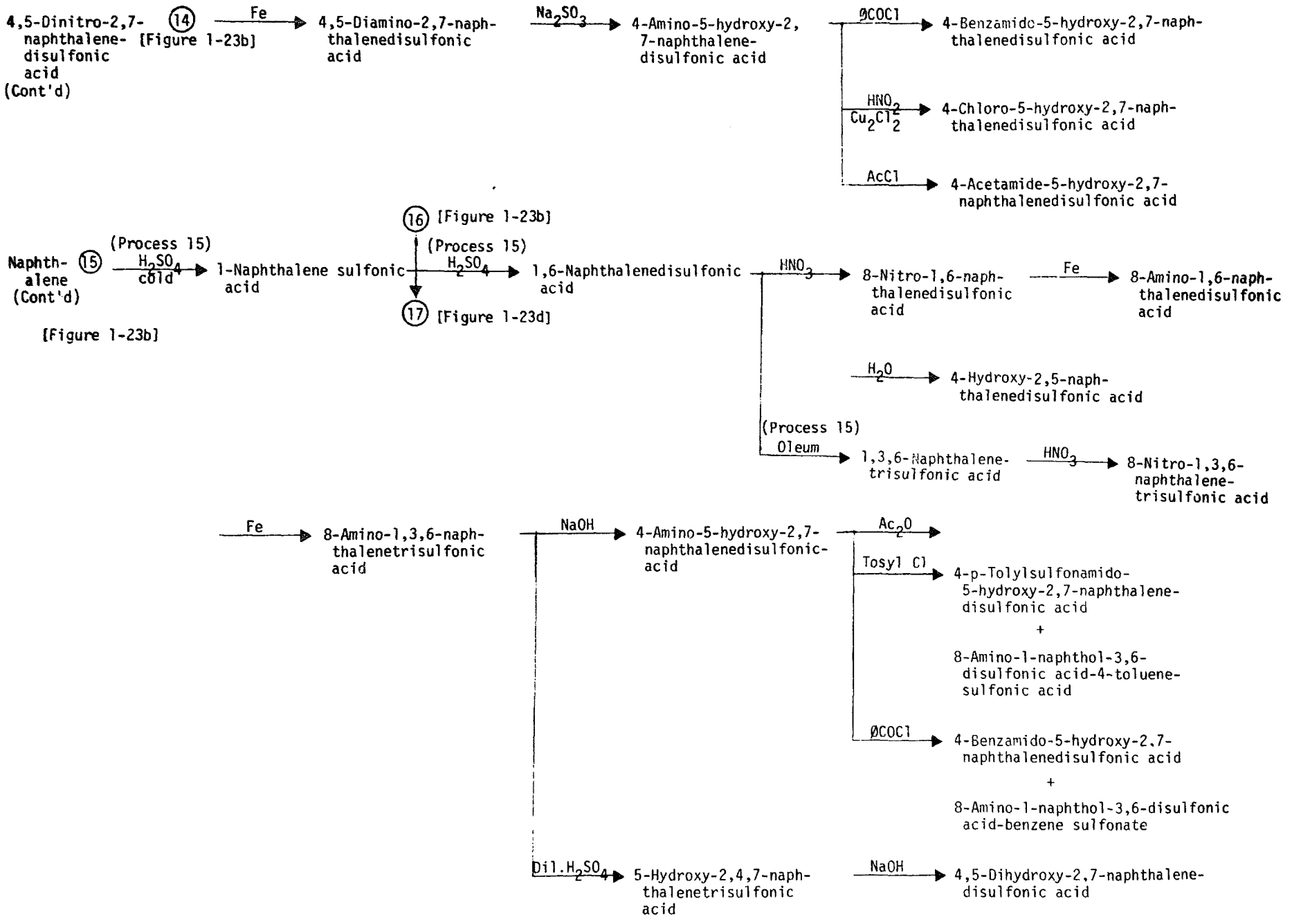

FIGURE 1-23c. SYNTHESIS OF VARIOUS INTERMEDIATES FOR DYE AND PIGMENT PRODUCTION FROM PURCHASED STARTING MATERIAL: NAPHTHALENE (Continued)

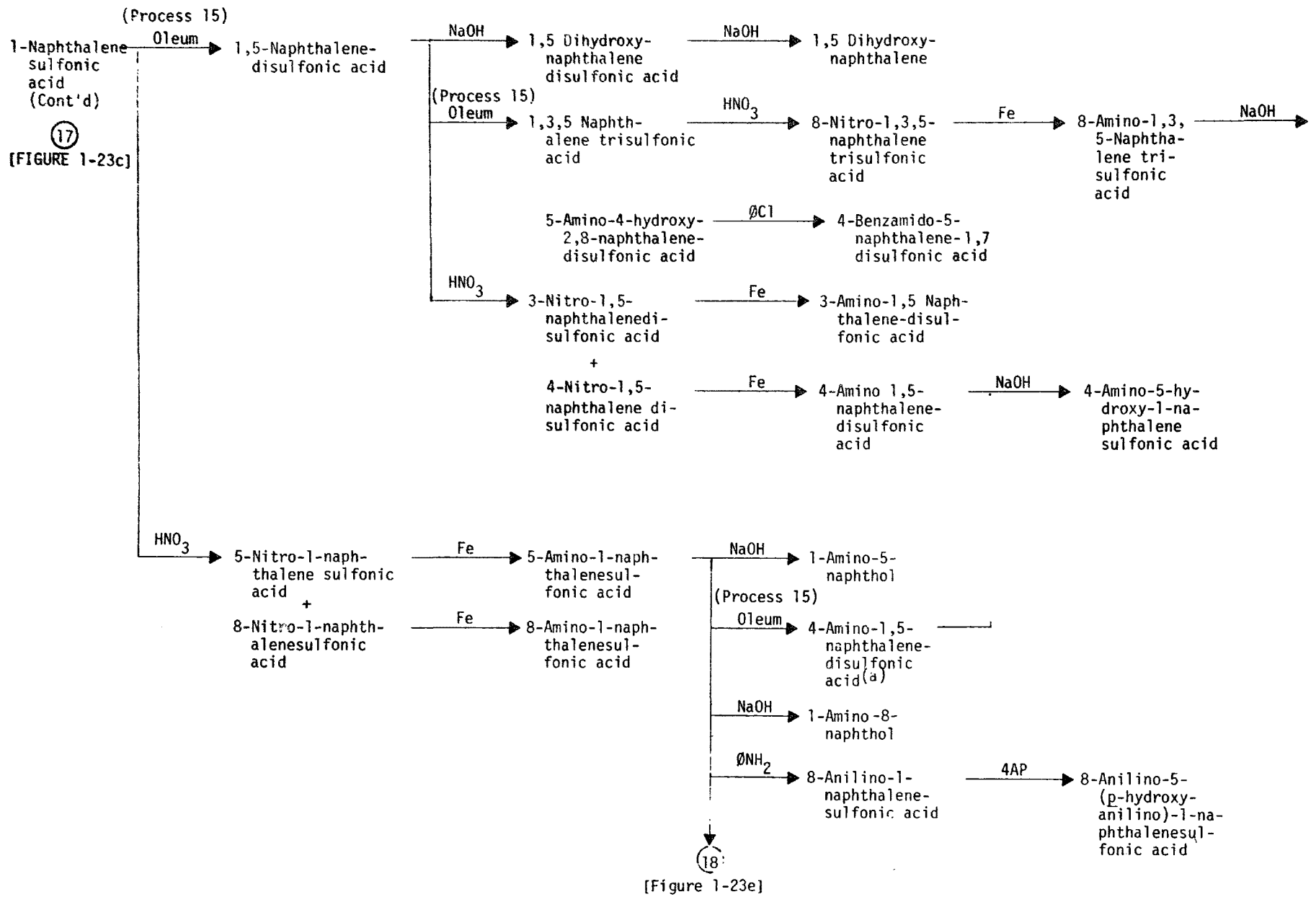

FIGURE 1-23d. SYNTHESIS OF VARIOUS INTERMEDIATES FOR DYE AND PIGMENT PRODUCTION FROM PURCHASED STARTING MATERIAL: NAPHTHALENE (Continued)

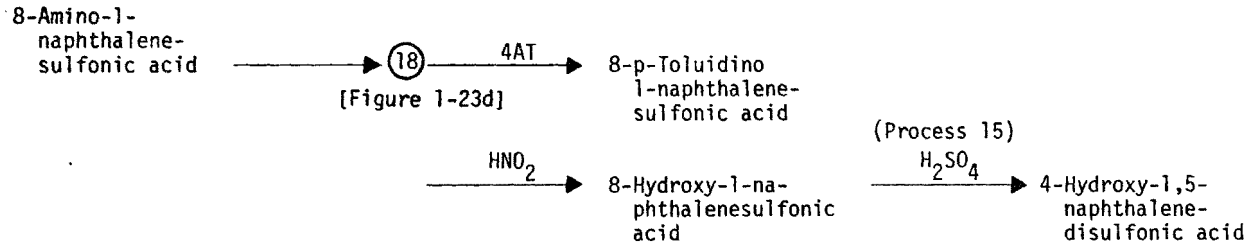

FIGURE 1-23e. SYNTHESIS OF VARIOUS INTERMEDIATES FOR DYE AND PIGMENT PRODUCTION FROM PURCHASED STARTING MATERIAL: NAPHTHALENE (Continued)

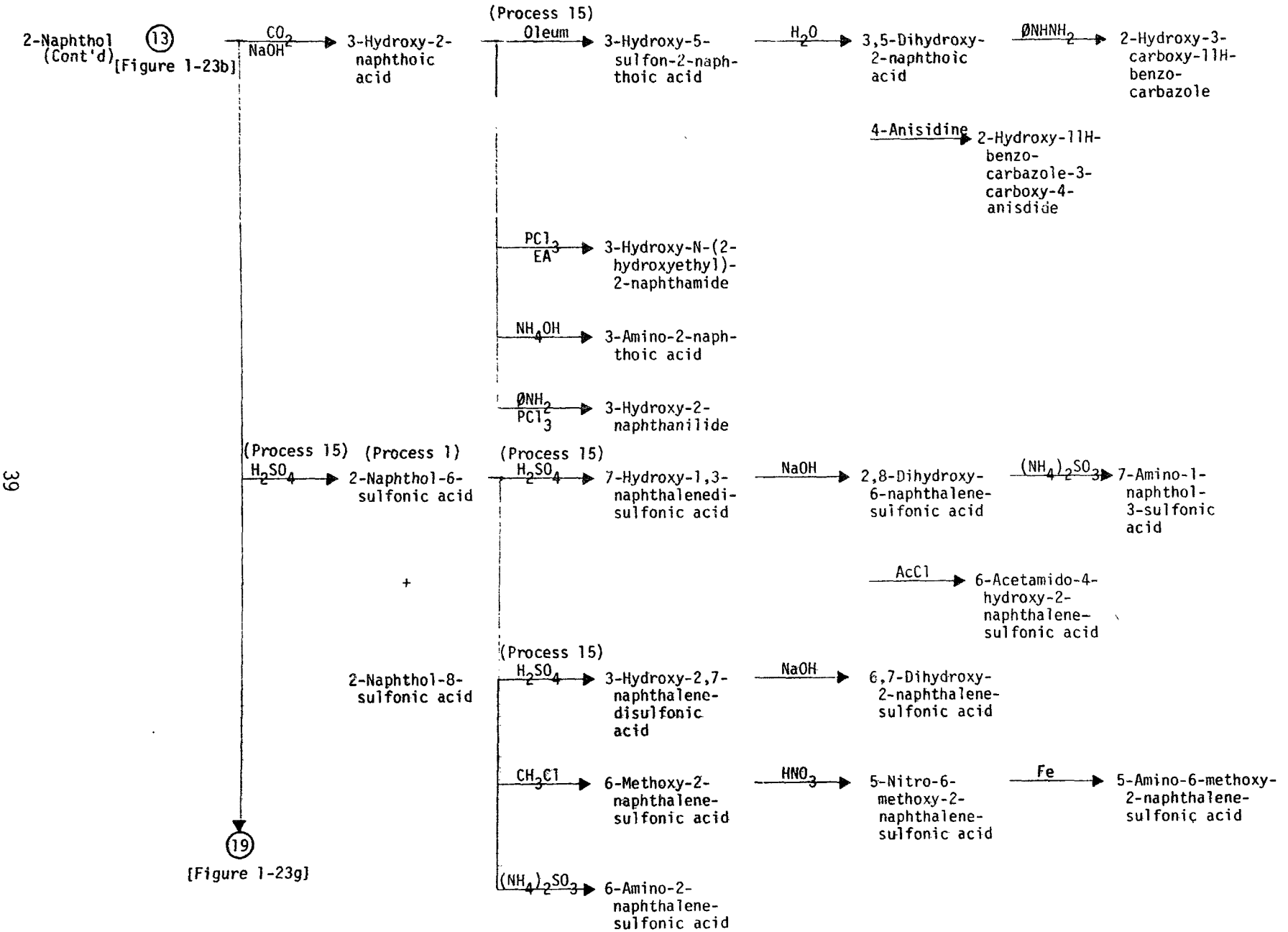

FIGURE 1-23f. SYNTHESIS OF VARIOUS INTERMEDIATES FOR DYE AND PIGMENT PRODUCTION FROM PURCHASED STARTING MATERIAL: NAPHTHALENE (Continued)

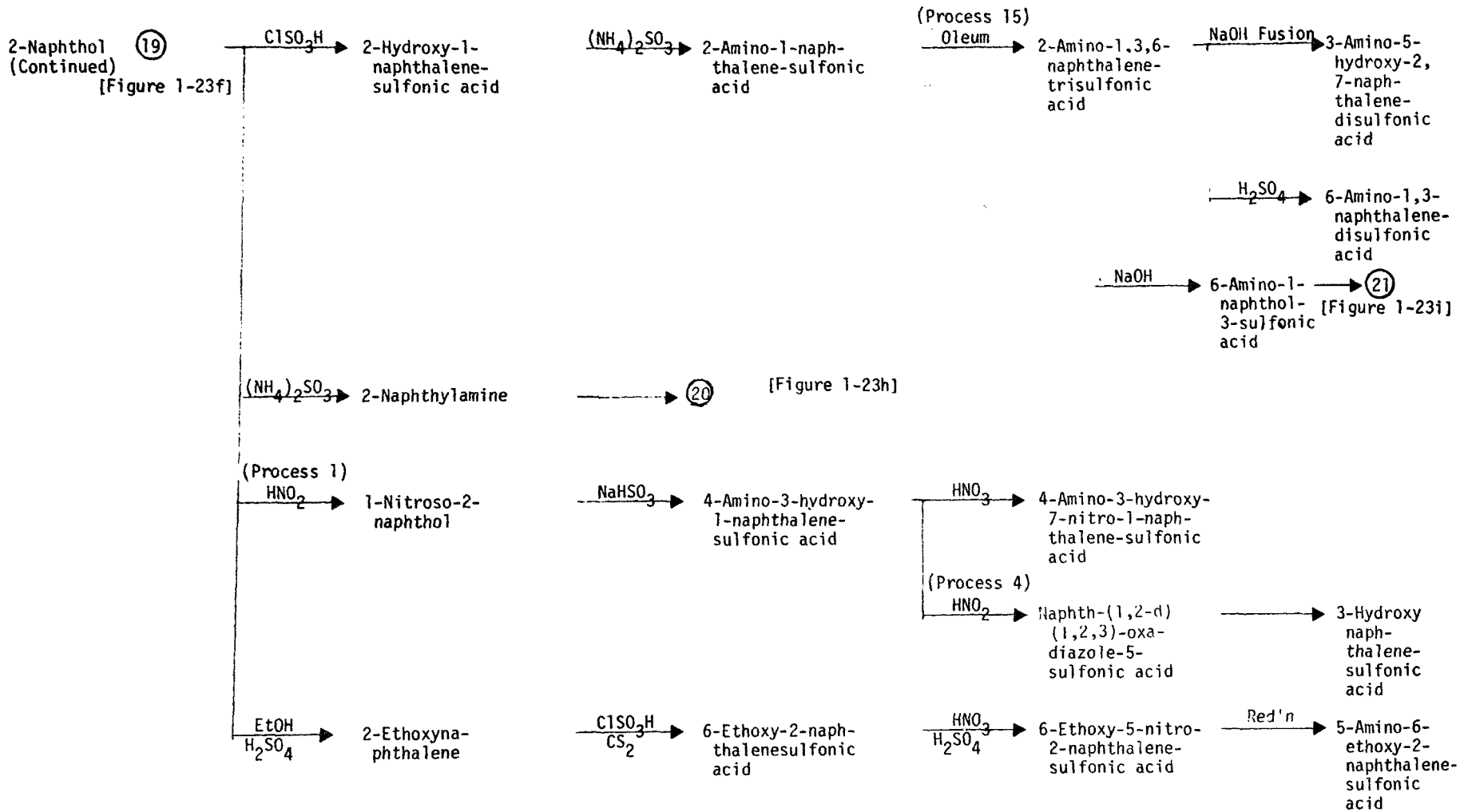

FIGURE 1-23g. SYNTHESIS OF VARIOUS INTERMEDIATES FOR DYE AND PIGMENT PRODUCTION FROM PURCHASED STARTING MATERIAL: NAPHTHALENE (Continued)

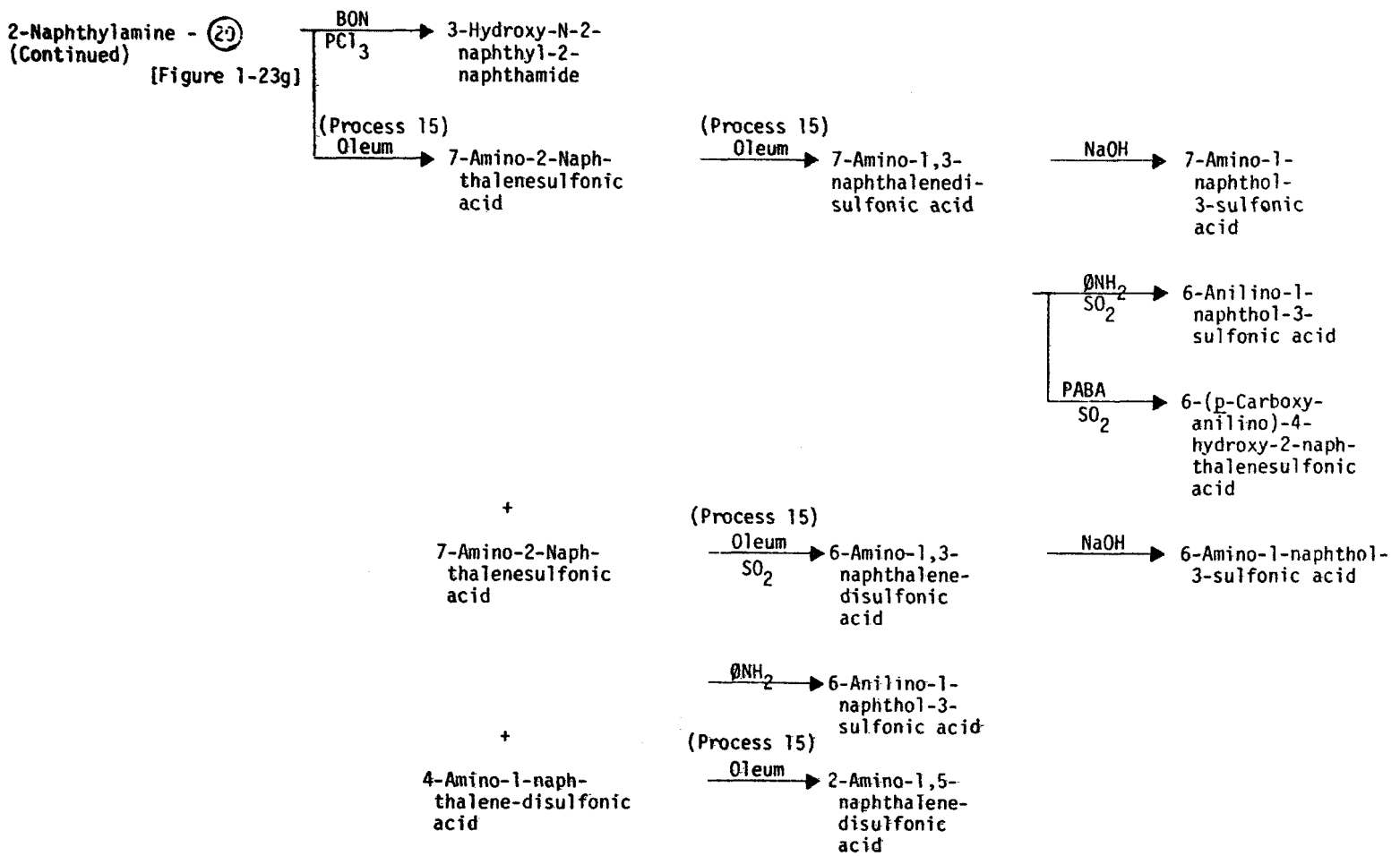

FIGURE 1-23h. SYNTHESIS OF VARIOUS INTERMEDIATES FOR DYE AND PIGMENT PRODUCTION FROM PURCHASED STARTING MATERIAL: NAPHTHALENE (Continued)

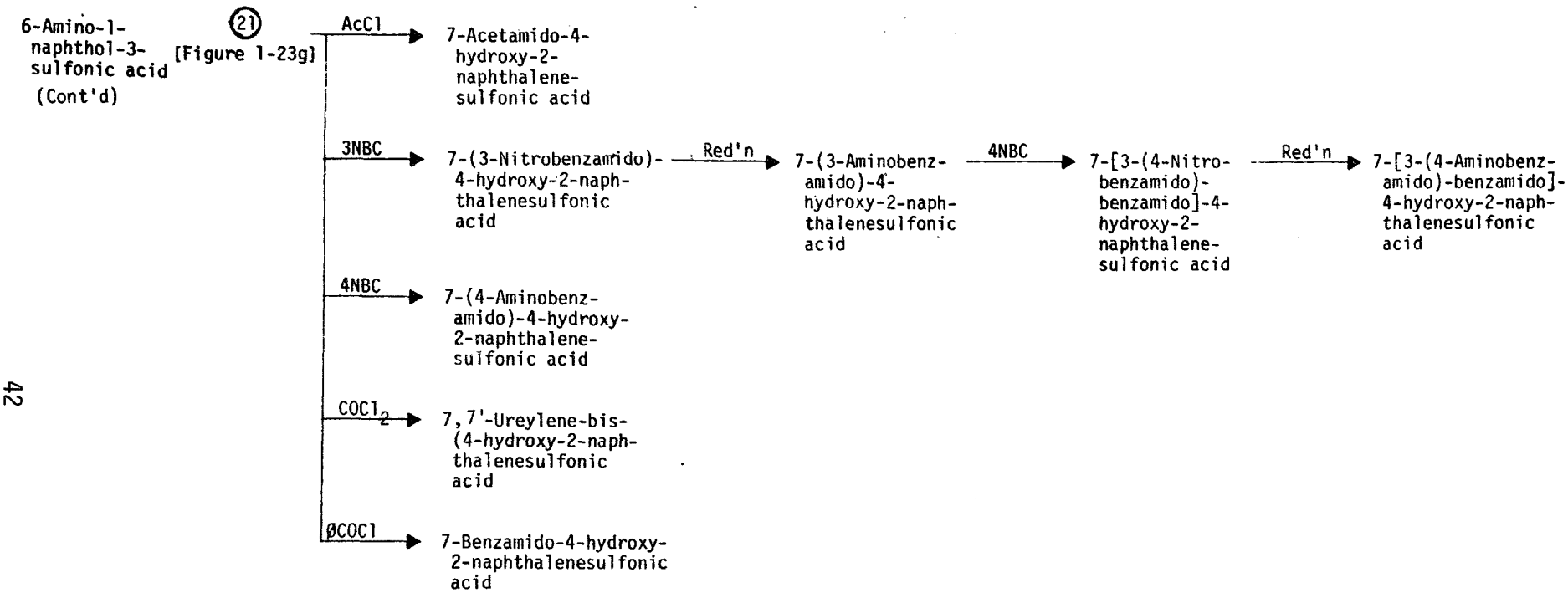

FIGURE 1-23i. SYNTHESIS OF VARIOUS INTERMEDIATES FOR DYE AND PIGMENT PRODUCTION FROM PURCHASED STARTING MATERIAL: NAPHTHALENE (Continued)

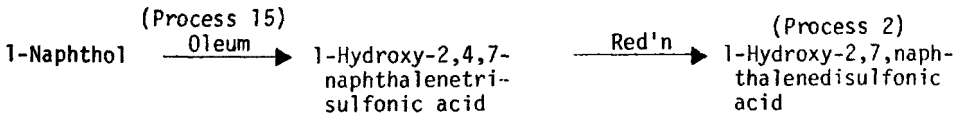

FIGURE 1-24. SYNTHESIS OF VARIOUS INTERMEDIATES FOR DYE AND PIGMENT PRODUCTION FROM PURCHASED STARTING MATERIAL: 1-NAPHTHOL

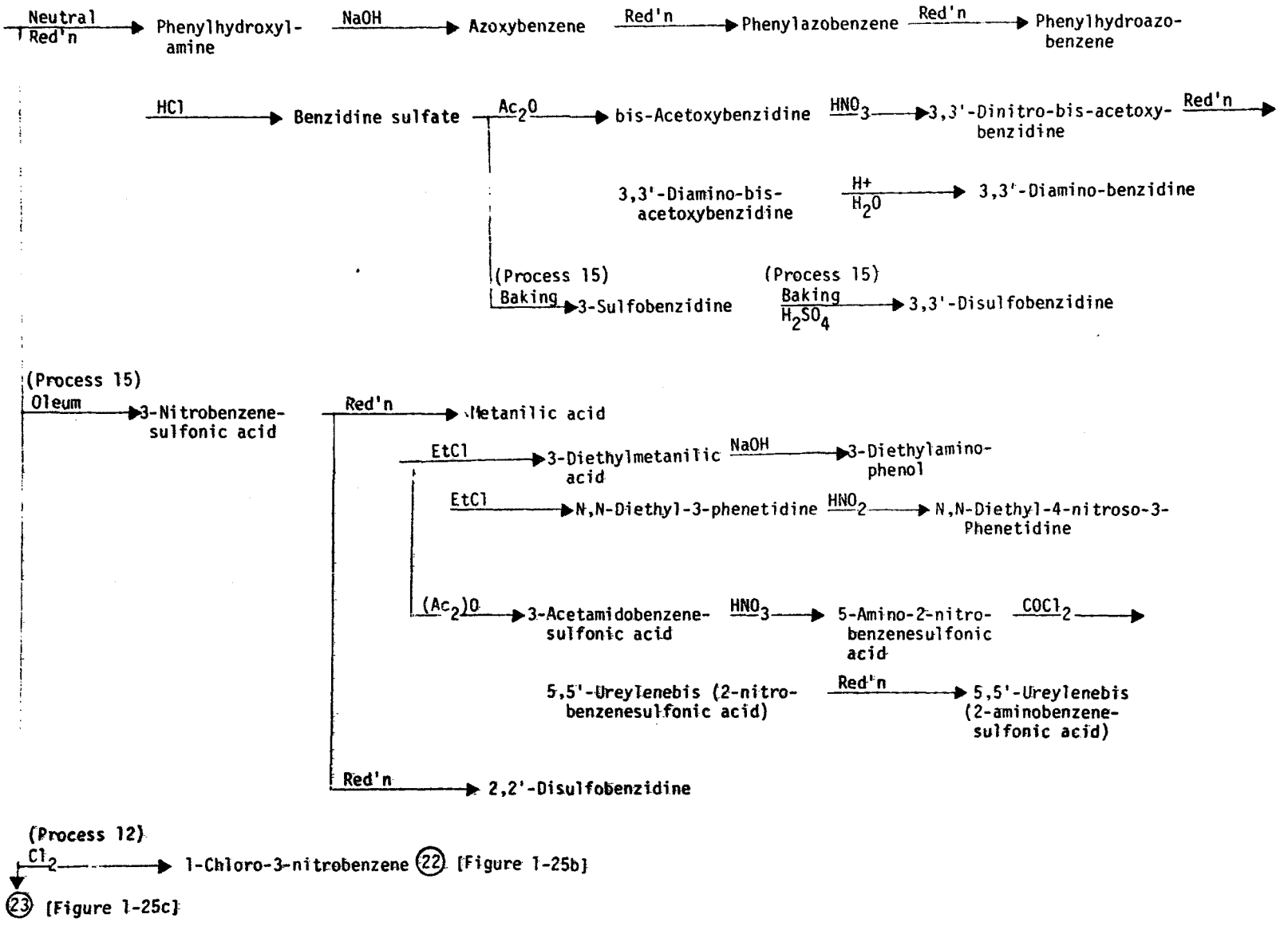

FIGURE 1-25a. SYNTHESIS OF VARIOUS INTERMEDIATES FOR DYE AND PIGMENT PRODUCTION FROM PURCHASED STARTING MATERIAL: NITROBENZENE

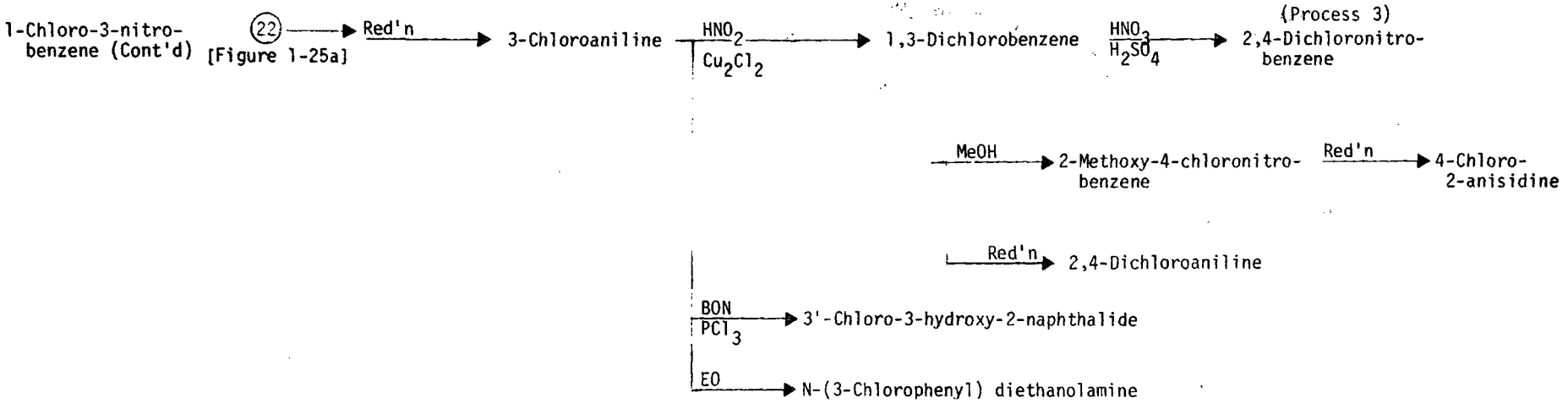

FIGURE 1-25b. SYNTHESIS OF VARIOUS INTERMEDIATES FOR DYE AND PIGMENT PRODUCTION FROM PURCHASED STARTING MATERIAL: NITROBENZENE (Continued)

Nitrobenzene (23)
(Cont'd) [Figure 1-25a]

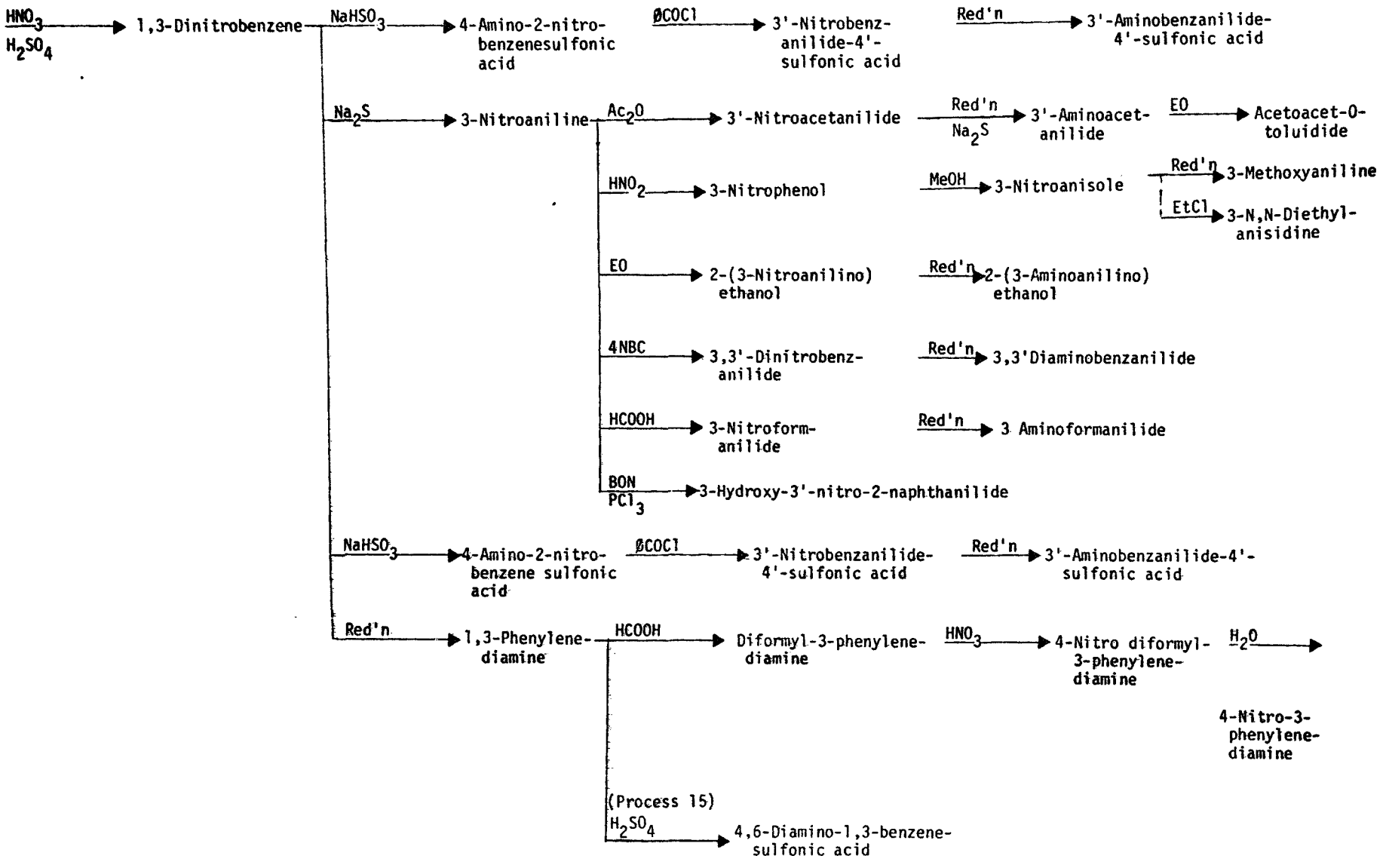

FIGURE 1-25c. SYNTHESIS OF VARIOUS INTERMEDIATES FOR DYE AND PIGMENT PRODUCTION FROM PURCHASED STARTING MATERIAL: NITROBENZENE (Continued)

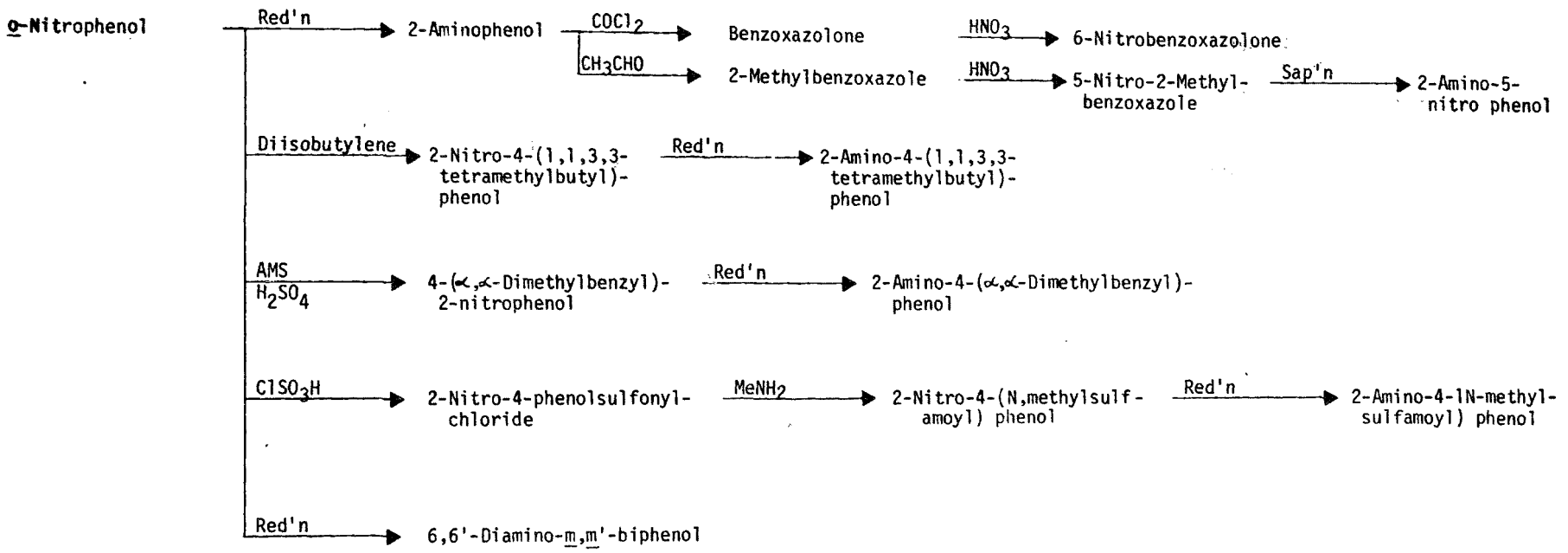

FIGURE 1-26. SYNTHESIS OF VARIOUS INTERMEDIATES FOR DYE AND PIGMENT PRODUCTION FROM PURCHASED STARTING MATERIAL: o-NITROPHENOL

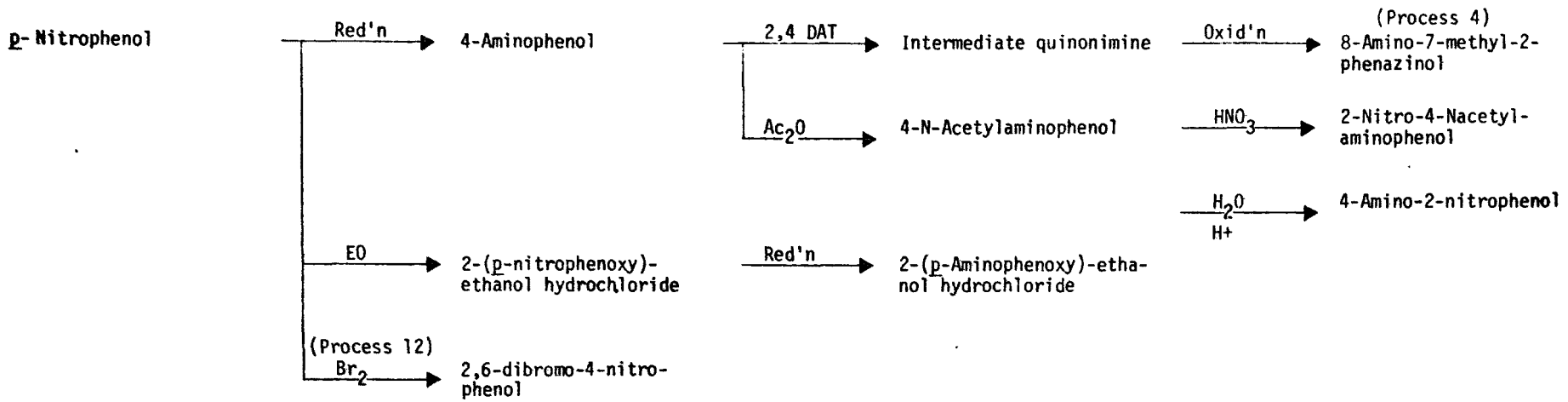

FIGURE 1-27. SYNTHESIS OF VARIOUS INTERMEDIATES FOR DYE AND PIGMENT PRODUCTION FROM PURCHASED STARTING MATERIAL: p-NITROPHENOL

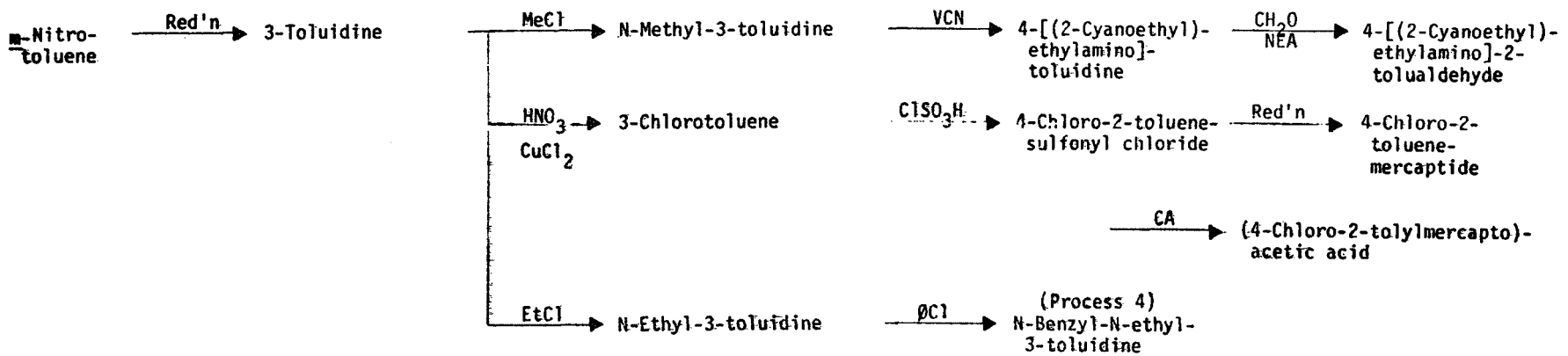

FIGURE 1-28. SYNTHESIS OF VARIOUS INTERMEDIATES FOR DYE AND PIGMENT PRODUCTION FROM PURCHASED STARTING MATERIAL: m-NITROTOLUENE

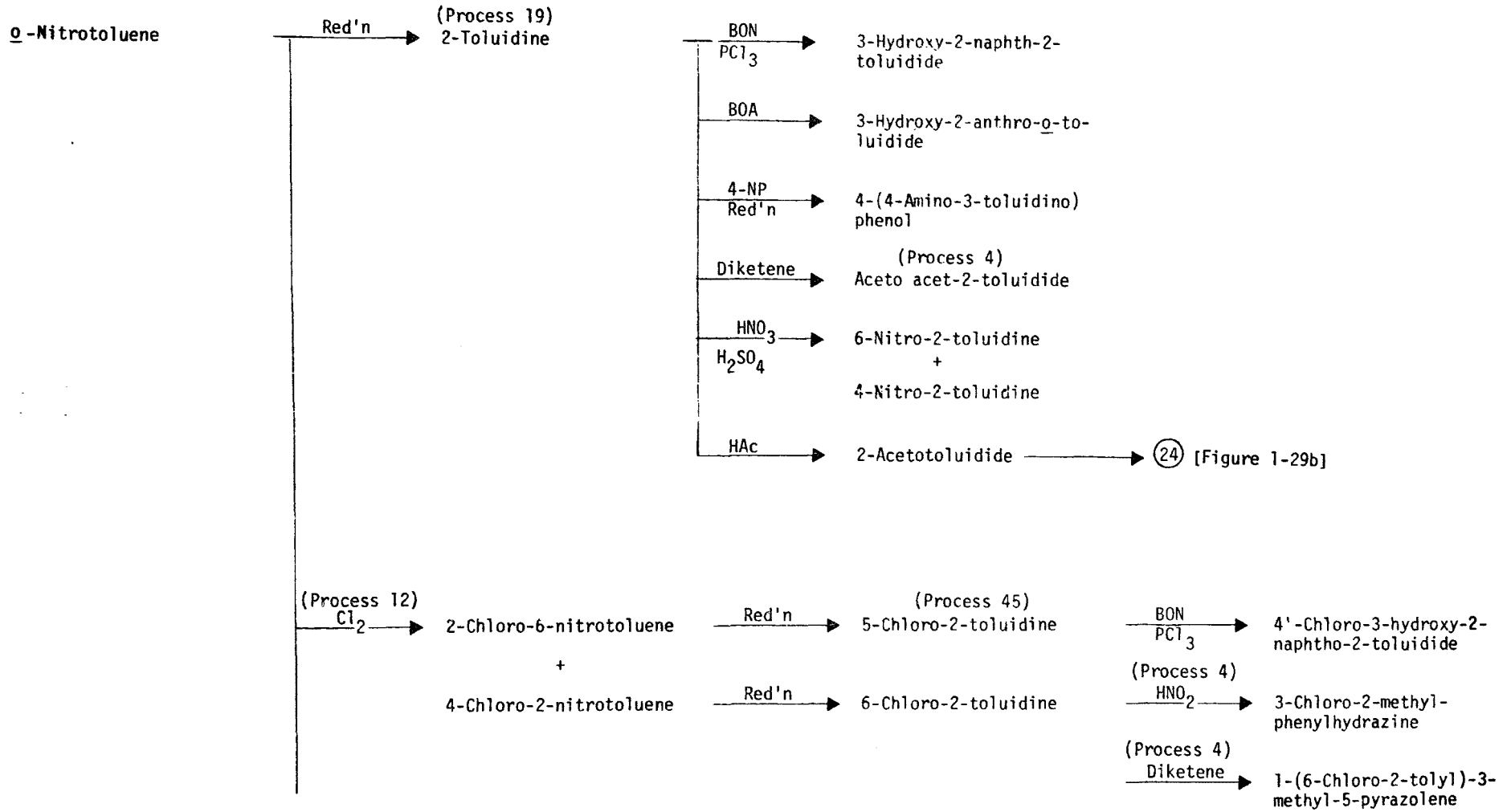

FIGURE 1-29a. SYNTHESIS OF VARIOUS INTERMEDIATES FOR DYES AND PIGMENT PRODUCTION FROM PURCHASED STARTING MATERIAL: o-NITROTOLUENE

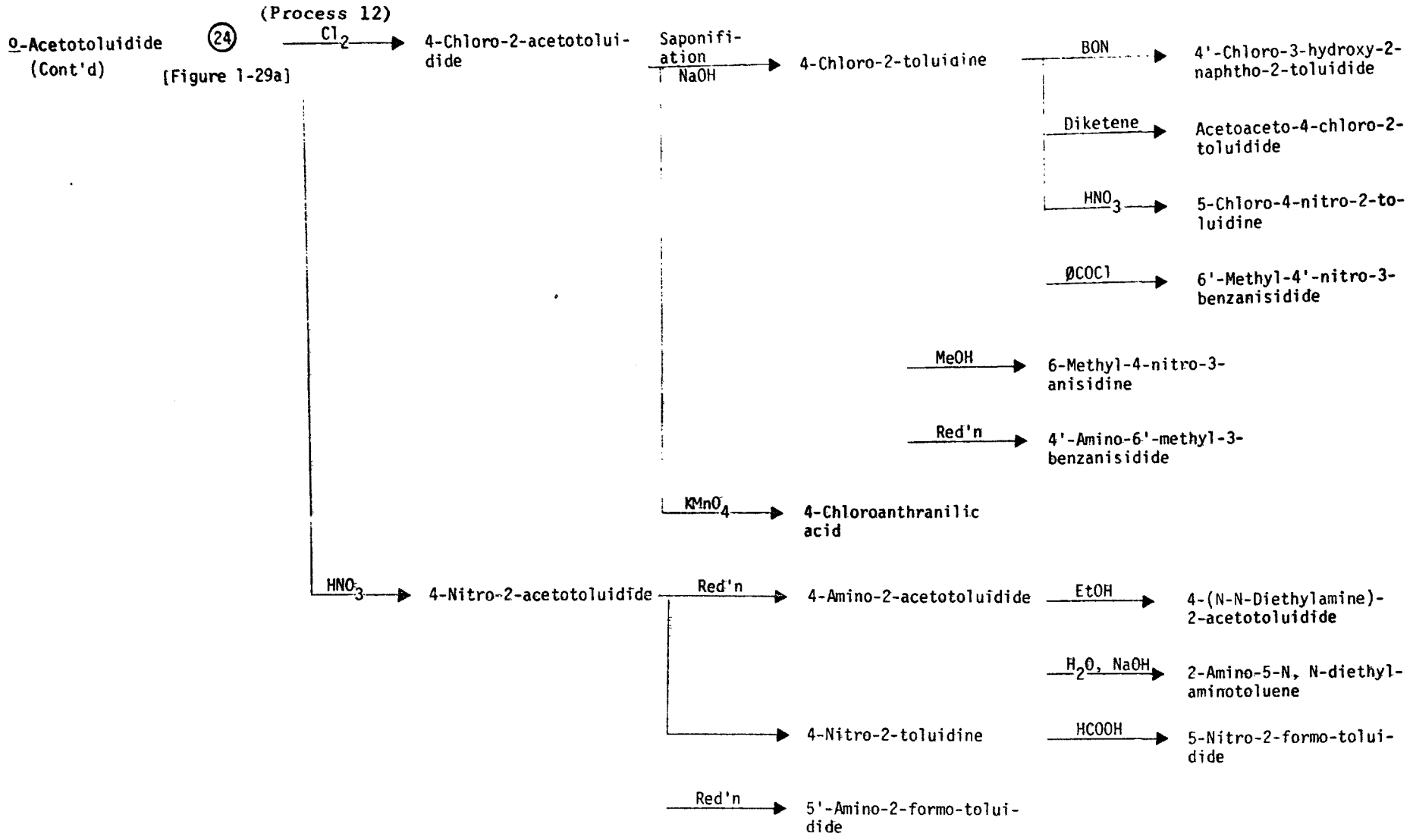

FIGURE 1-29b. SYNTHESIS OF VARIOUS INTERMEDIATES FOR DYE AND PIGMENT PRODUCTION FROM PURCHASED STARTING MATERIAL: o-NITROTOLUENE (Continued)

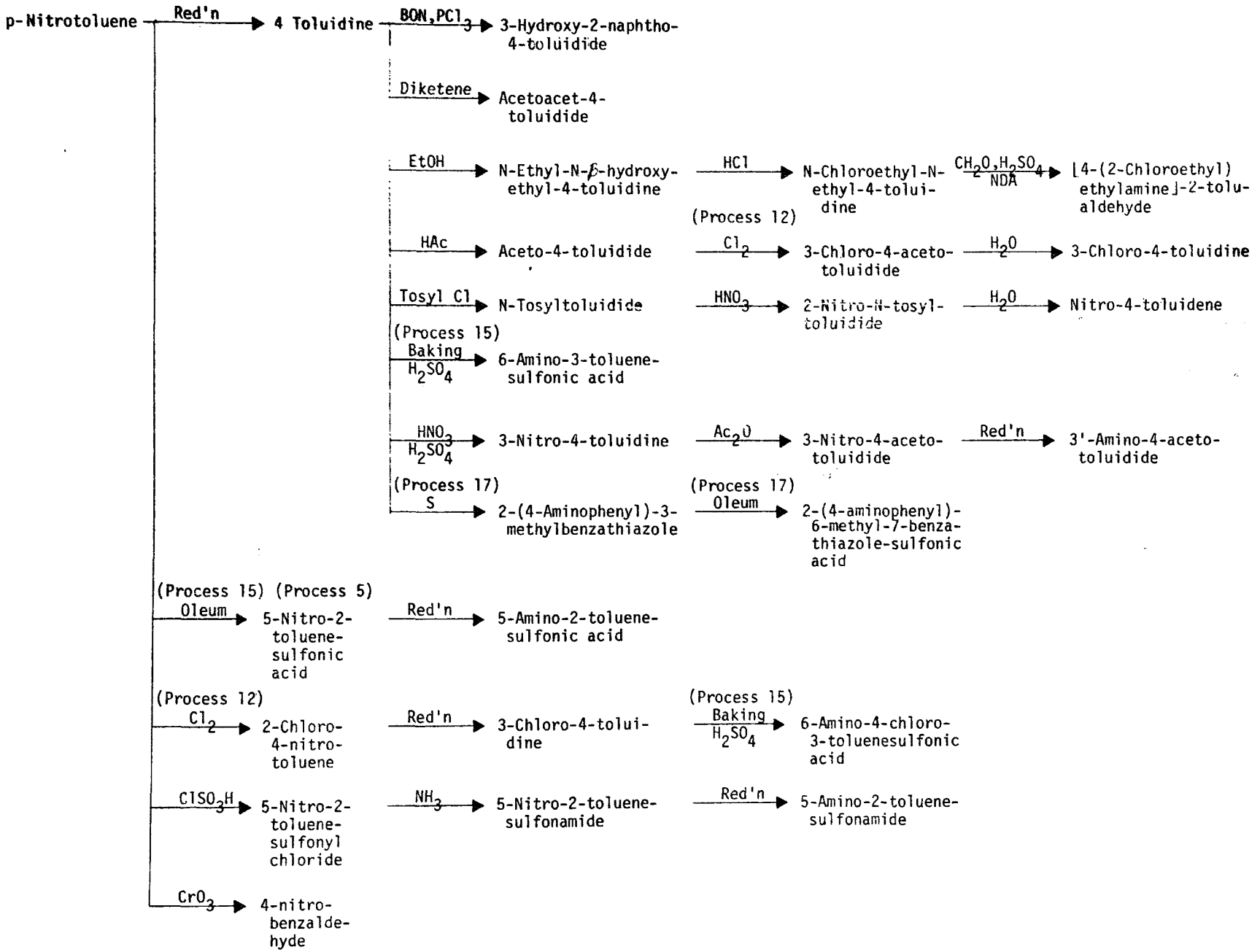

FIGURE 1-30. SYNTHESIS OF VARIOUS INTERMEDIATES FOR DYE AND PIGMENT PRODUCTION FROM PURCHASED STARTING MATERIAL: p-NITROTOLUENE

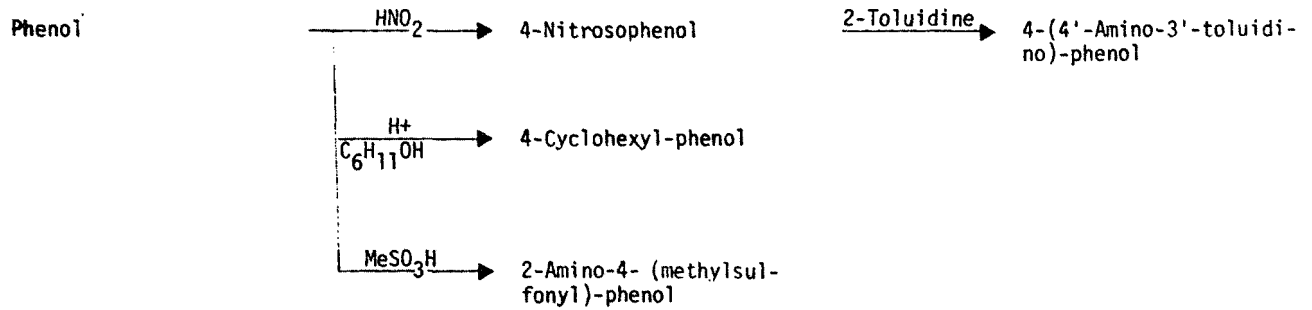

FIGURE 1-31. SYNTHESIS OF VARIOUS INTERMEDIATES FOR DYES AND PIGMENT PRODUCTION FROM PURCHASED STARTING MATERIAL: PHENOL

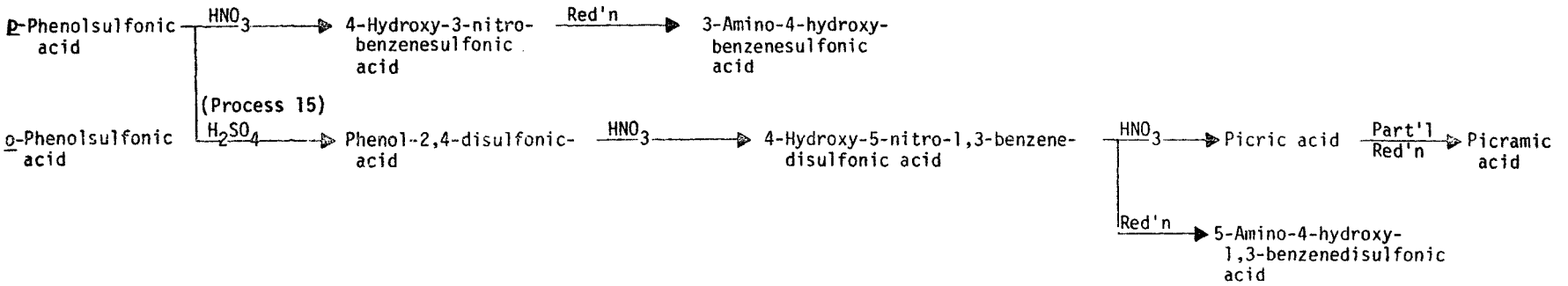

FIGURES 1-32 and 1-33. SYNTHESIS OF VARIOUS INTERMEDIATES FOR DYE AND PIGMENT PRODUCTION FROM PURCHASED STARTING MATERIALS: o- and p-PHENOLSULFONIC ACID

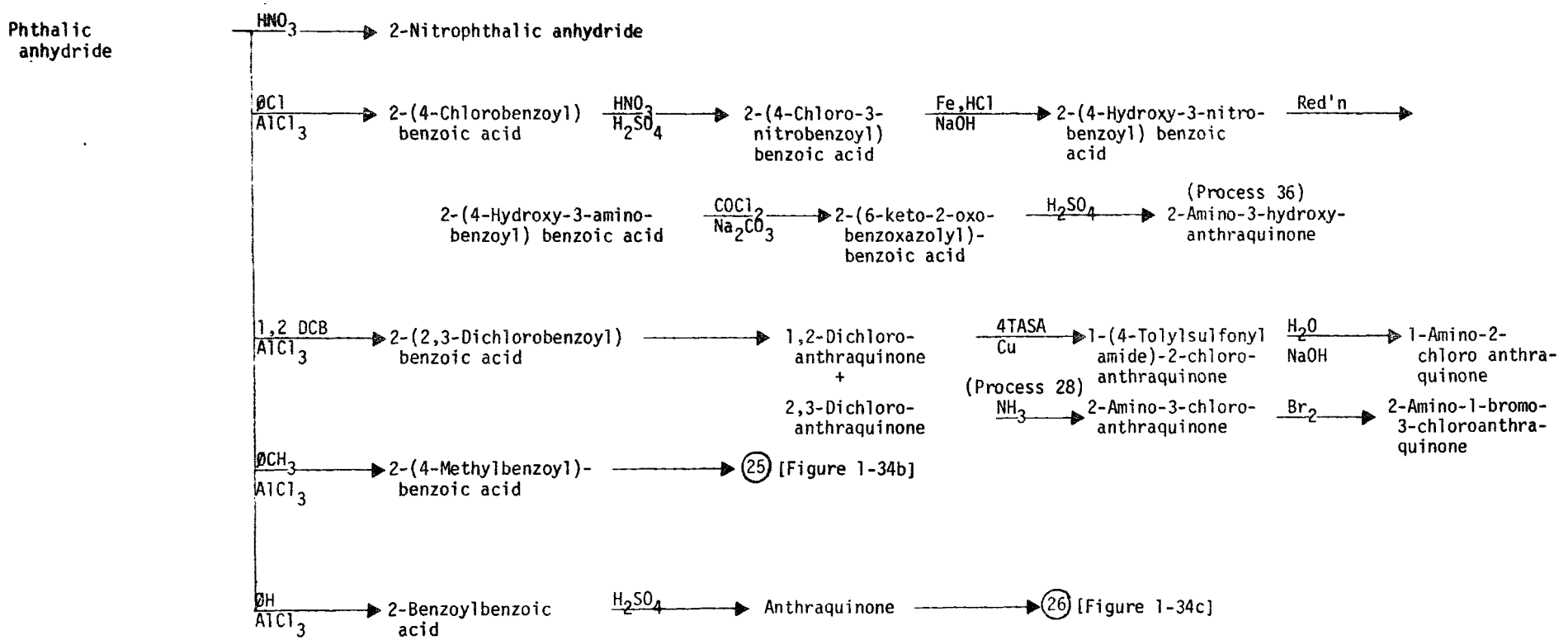

FIGURE 1-34a. SYNTHESIS OF VARIOUS INTERMEDIATES FOR DYE AND PIGMENT PRODUCTION FROM PURCHASED STARTING MATERIAL: PHTHALIC ANHYDRIDE

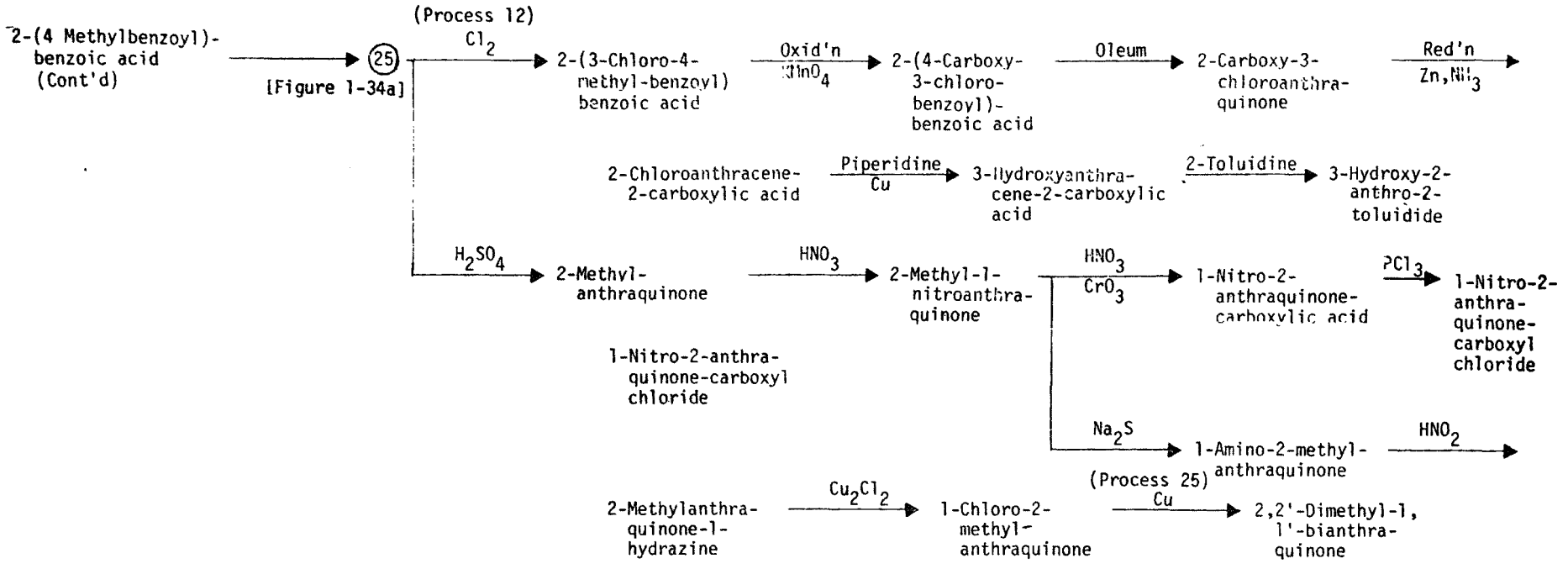

FIGURE 1-34b. SYNTHESIS OF VARIOUS INTERMEDIATES FOR DYE AND PIGMENT PRODUCTION FROM PURCHASED STARTING MATERIAL: PHTHALIC ANHYDRIDE (Continued)

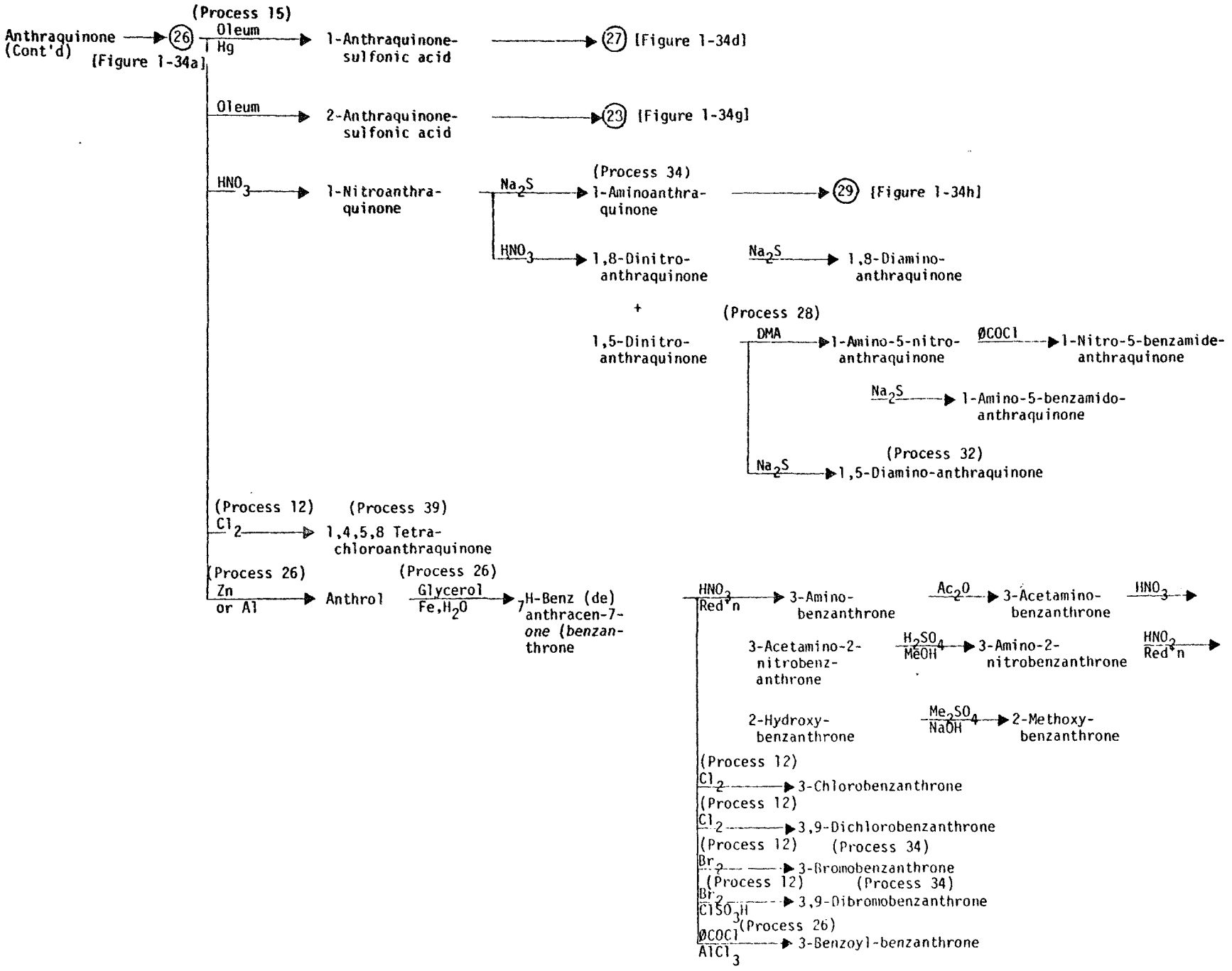

FIGURE 1-34c. SYNTHESIS OF VARIOUS INTERMEDIATES FOR DYE AND PIGMENT PRODUCTION FROM PURCHASED STARTING MATERIAL: PHTHALIC ANHYDRIDE (Continued)

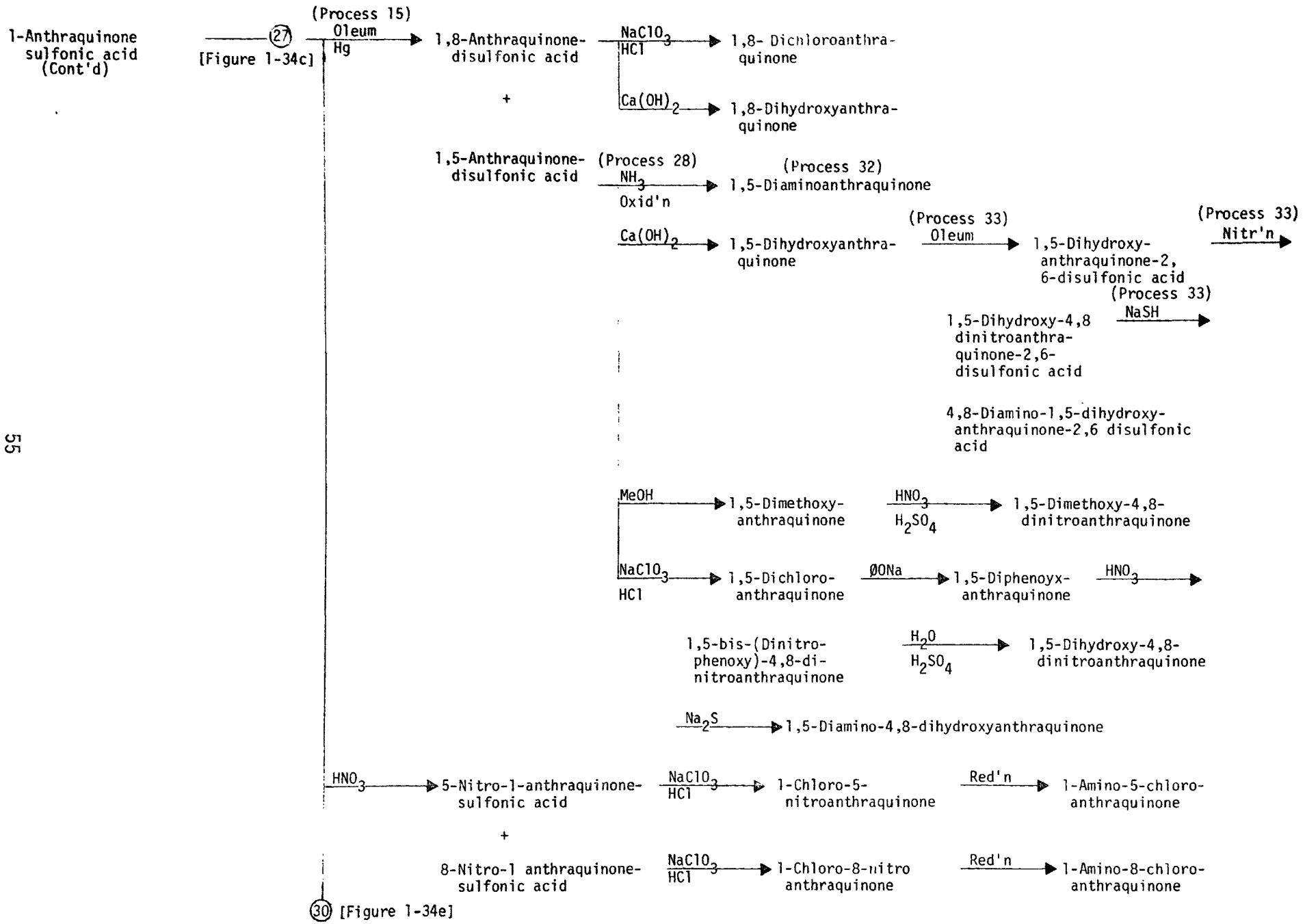

FIGURE 1-34d. SYNTHESIS OF VARIOUS INTERMEDIATES FOR DYE AND PIGMENT PRODUCTION FROM PURCHASED STARTING MATERIAL: PHTHALIC ANHYDRIDE (Continued)

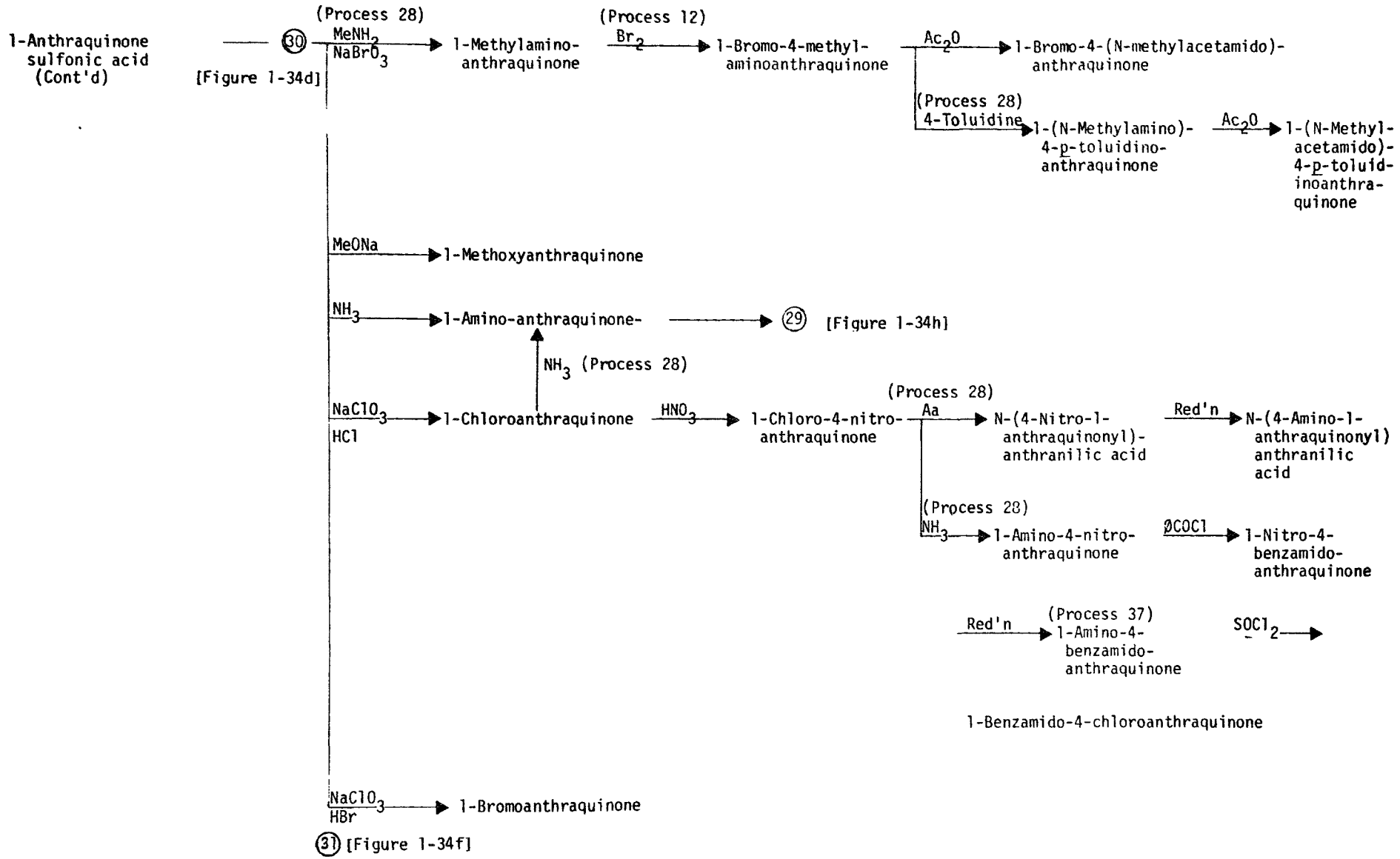

FIGURE 1-34e. SYNTHESIS OF VARIOUS INTERMEDIATES FOR DYE AND PIGMENT PRODUCTION FROM PURCHASED STARTING MATERIAL: PHTHALIC ANHYDRIDE (Continued)

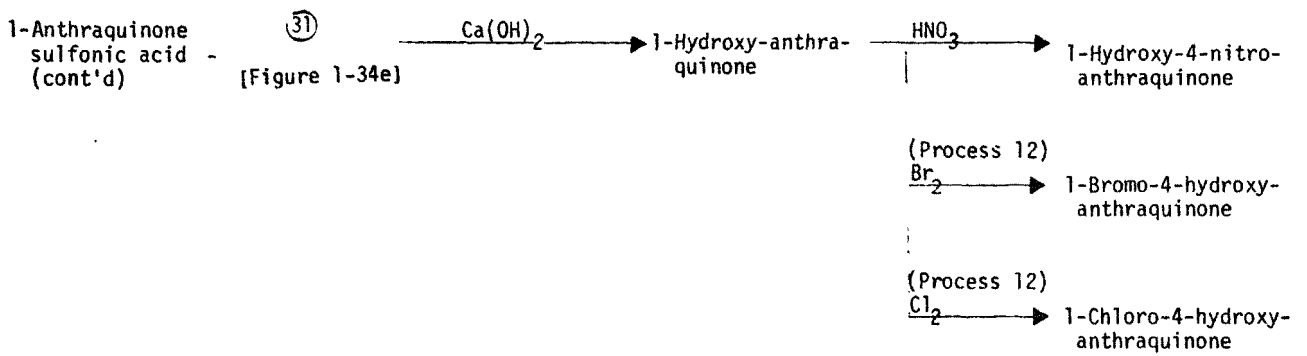

FIGURE 1-34f. SYNTHESIS OF VARIOUS INTERMEDIATES FOR DYE AND PIGMENT PRODUCTION FROM PURCHASED STARTING MATERIAL: PHTHALIC ANHYDRIDE (Continued)

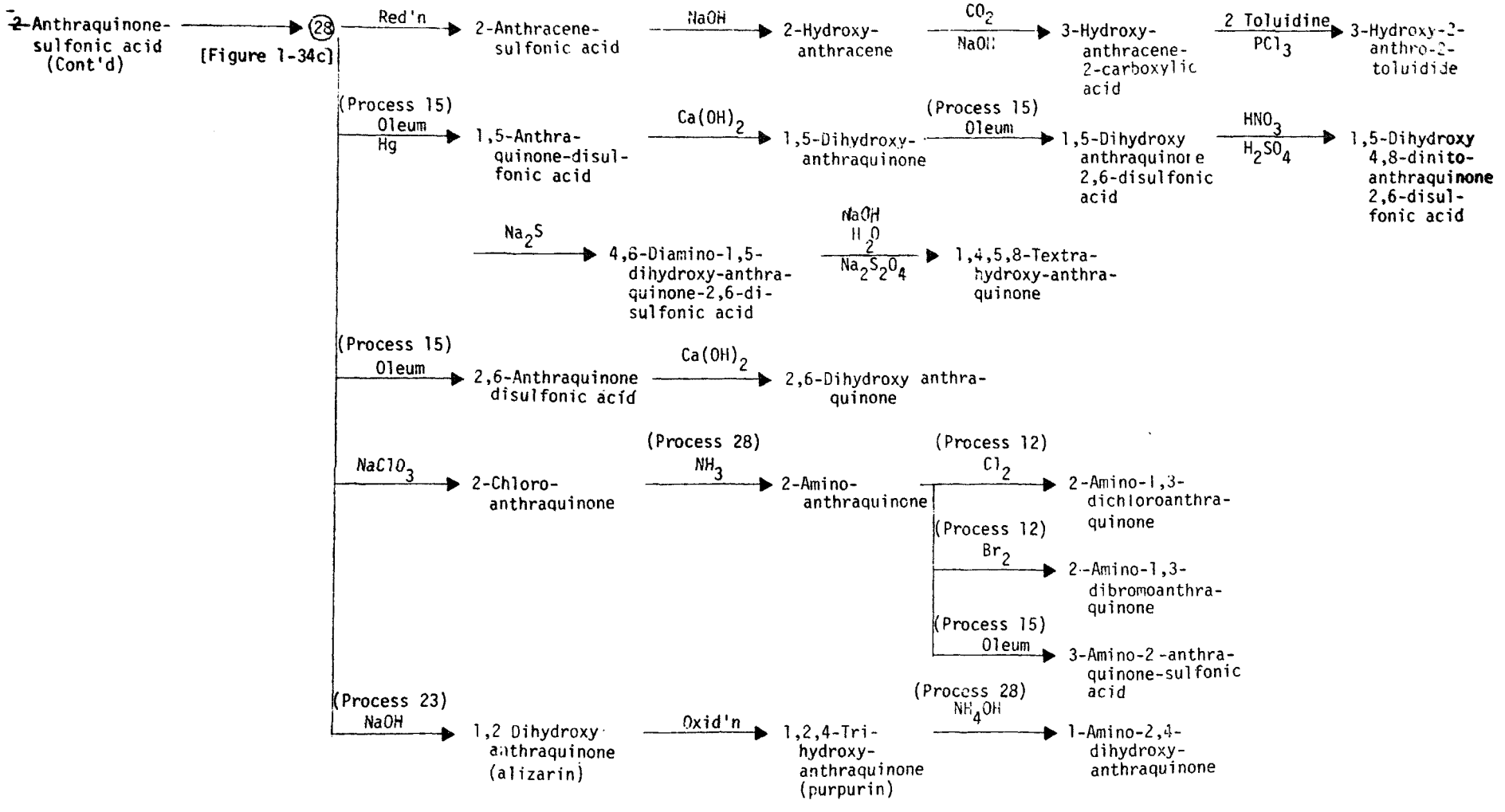

FIGURE 1-34g. SYNTHESIS OF VARIOUS INTERMEDIATES FOR DYE AND PIGMENT PRODUCTION FROM PURCHASED STARTING MATERIAL: PHTHALIC ANHYDRIDE (Continued)

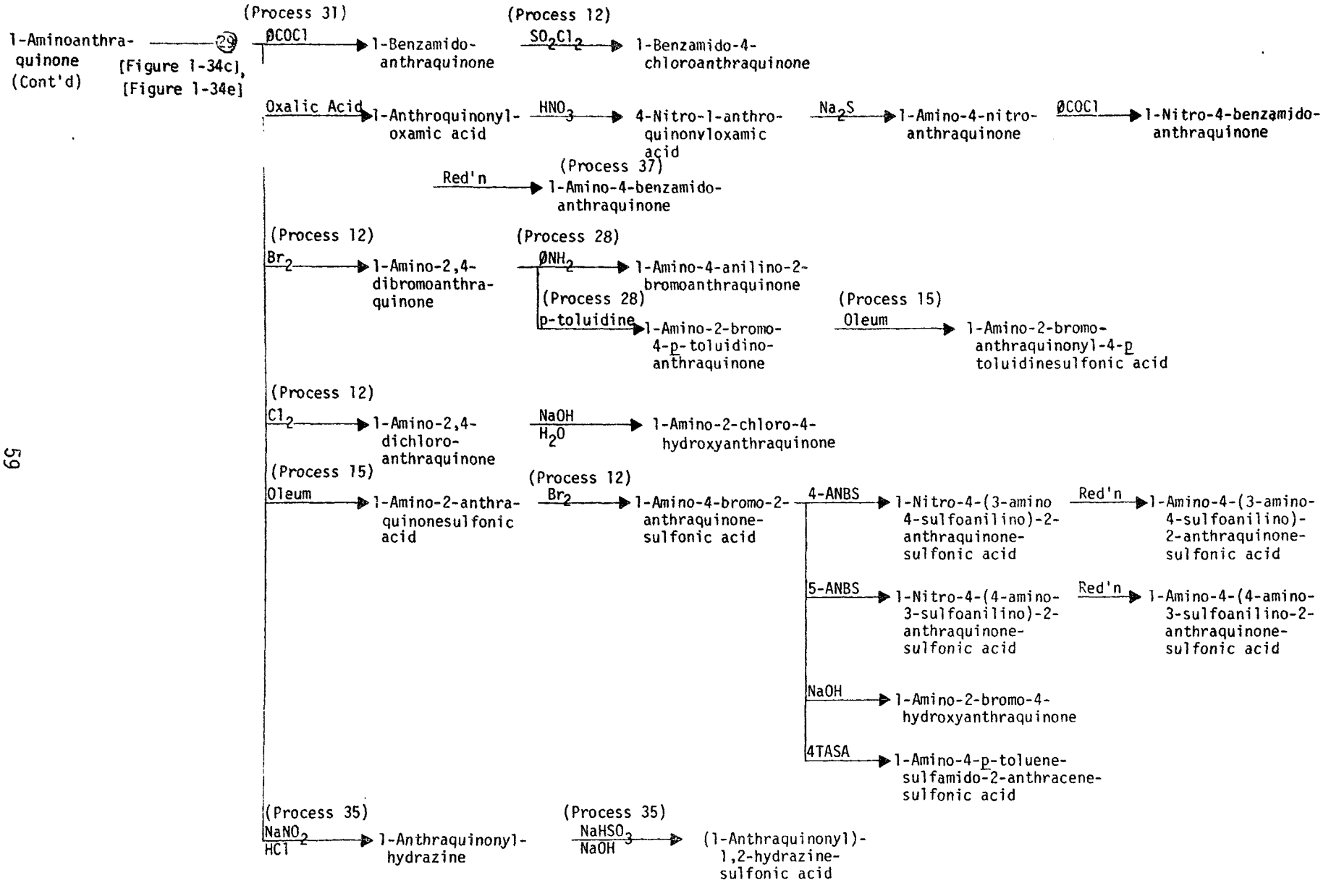

FIGURE 1-34h. SYNTHESIS OF VARIOUS INTERMEDIATES FOR DYE AND PIGMENT PRODUCTION FROM PURCHASED STARTING MATERIAL: PHTHALIC ANHYDRIDE (Continued)

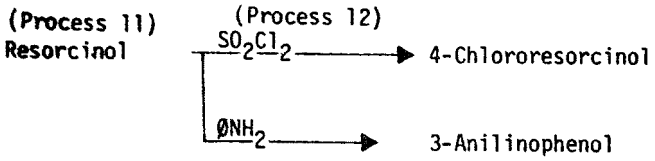

FIGURE 1-35. SYNTHESIS OF VARIOUS INTERMEDIATES FOR DYE AND PIGMENT PRODUCTION FROM PURCHASED STARTING MATERIAL: RESORCINOL

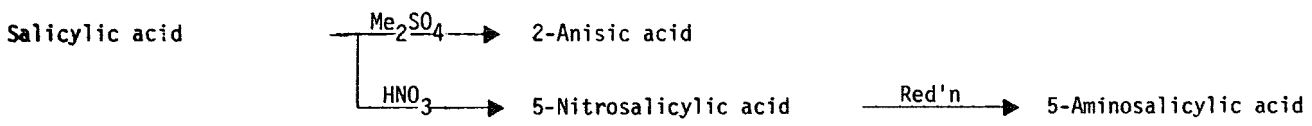

FIGURE 1-36. SYNTHESIS OF VARIOUS INTERMEDIATES FOR DYE AND PIGMENT PRODUCTION FROM PURCHASED STARTING MATERIAL: SALICYLIC ACID

FIGURE 1-37. SYNTHESIS OF VARIOUS INTERMEDIATES FOR DYE AND PIGMENT PRODUCTION FROM PURCHASED STARTING MATERIAL: TOLUENE

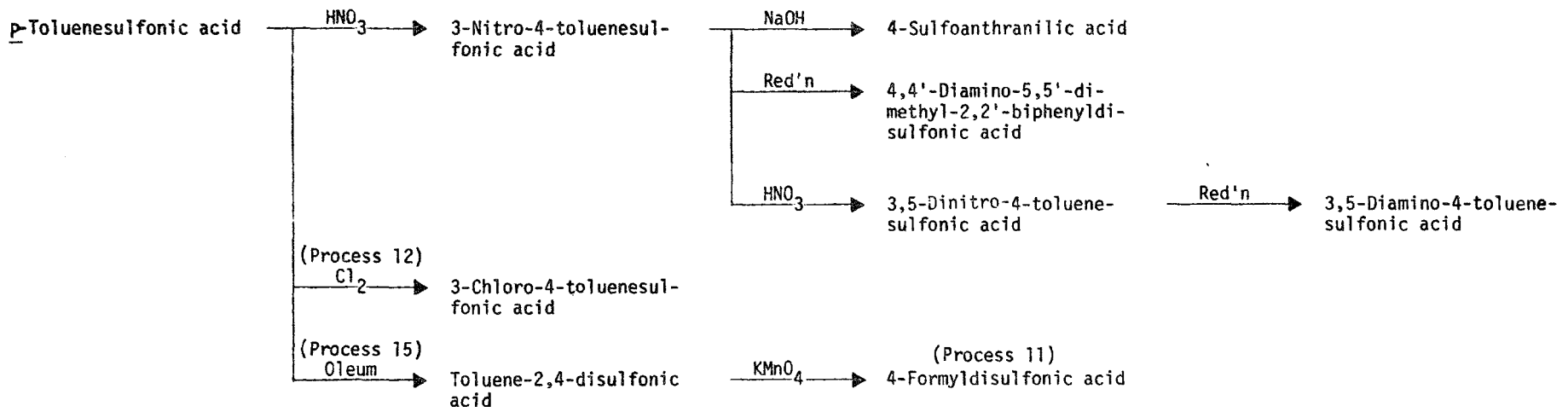

FIGURE 1-38. SYNTHESIS OF VARIOUS INTERMEDIATES FOR DYE AND PIGMENT PRODUCTION FROM PURCHASED STARTING MATERIAL: p-TOLUENESULFONIC ACID

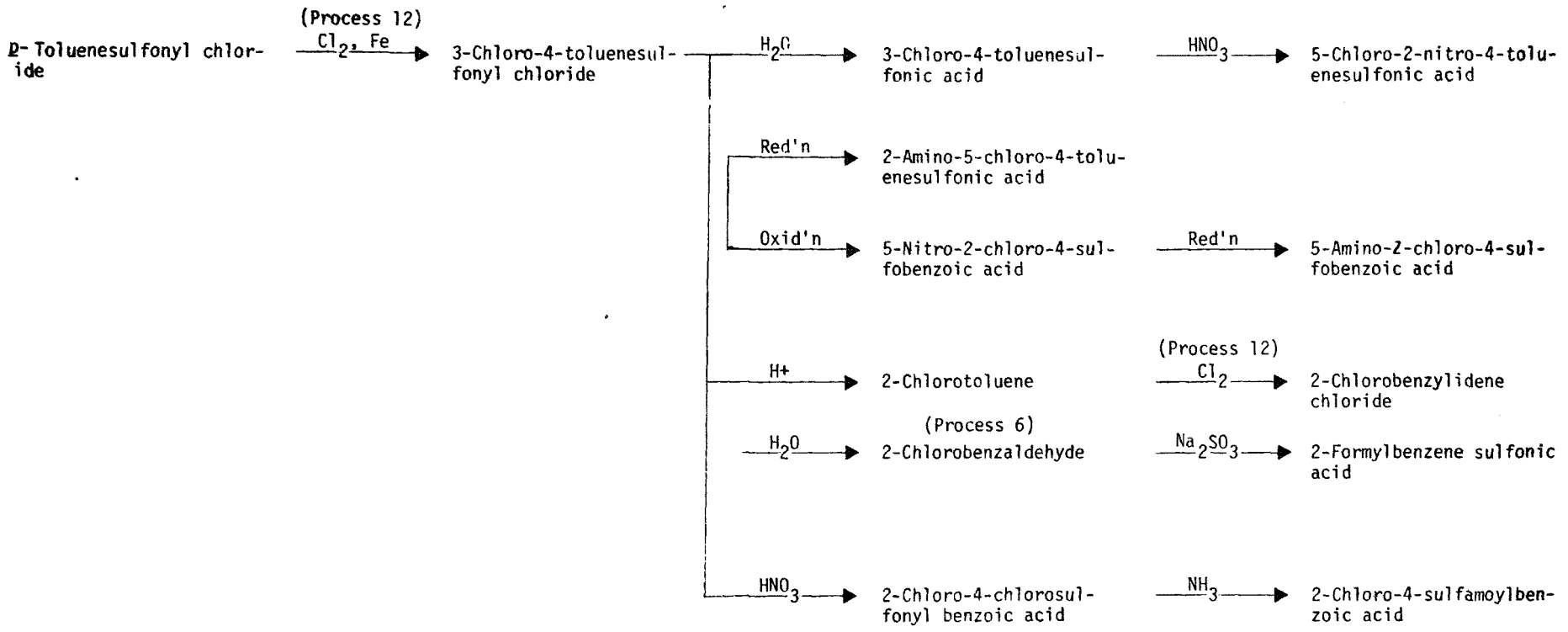

FIGURE 1-39. SYNTHESIS OF VARIOUS INTERMEDIATES FOR DYE AND PIGMENT PRODUCTION FROM PURCHASED STARTING MATERIAL: p-TOLUENESULFONYL CHLORIDE

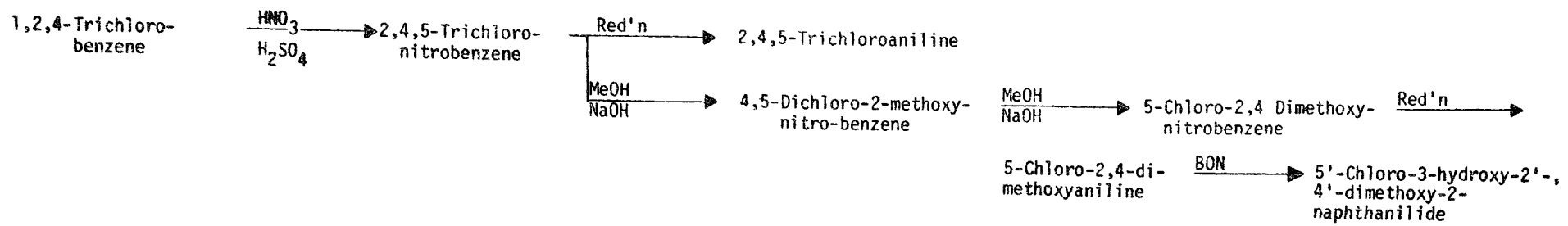

FIGURE 1-40. SYNTHESIS OF VARIOUS INTERMEDIATES FOR DYE AND PIGMENT PRODUCTION PURCHASED STARTING MATERIAL: 1,2,4, TRICHLOROBENZENE

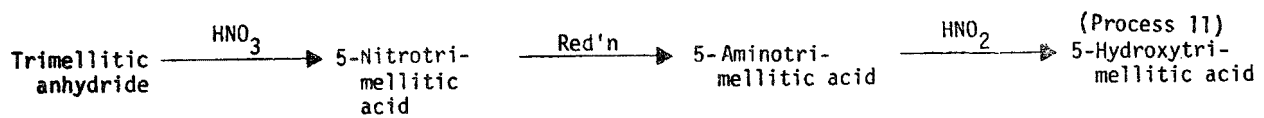

FIGURE 1-41. SYNTHESIS OF VARIOUS INTERMEDIATES FOR DYE AND PIGMENT PRODUCTION FROM PURCHASED STARTING MATERIAL: TRIMELLITIC ANHYDRIDE

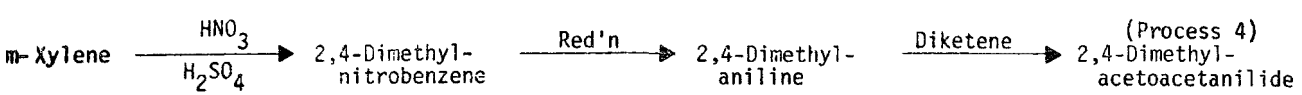

FIGURE 1-42. SYNTHESIS OF VARIOUS INTERMEDIATES FOR DYE AND PIGMENT PRODUCTION FROM PURCHASED STARTING MATERIAL: m-XYLENE

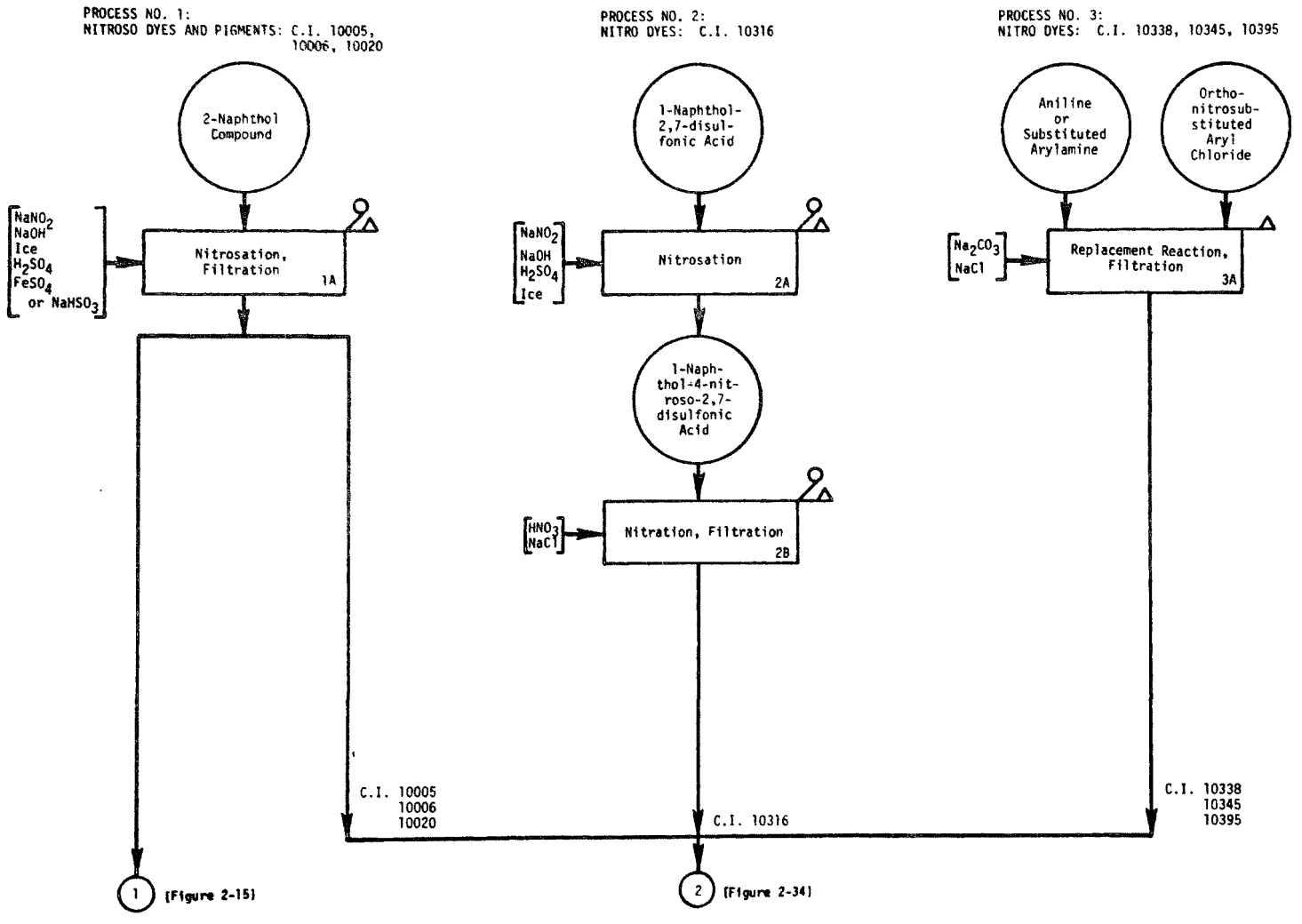

FIGURE 2-1. FLOW CHART FOR THE PRODUCTION OF SELECTED NITROSO AND NITRO DYES AND PIGMENTS FROM VARIOUS INTERMEDIATES

NITROSO DYES (C.I.10005, 10006, 10020)

1. Function - This process serves to transform either 2-naphthol (C.I. 10005 and 10006) or 2-naphthol-6-sulfonic acid (C.I. 10020) into a color product. The pigment formation process step serves to make the intermediate dye into a very insoluble material which can serve as a pigment. A simple stirred reactor made of stainless steel serves for carrying out the necessary reactions.

2. Input Materials - The required materials for making these colors are shown in Exhibit 1. Ice is required to cool the nitrosation reactions.

EXHIBIT 1

Color Index No.	10005	10006	10020	10020:1
Component				
2-naphthol	x	x		
sodium nitrite	x	x	x	x
sulfuric acid	x	x	x	x
ferrous sulfate		x	x	x
sodium bisulfite	x	x		
barium chloride				x
2-naphthol-6-sulfonic acid			x	x

3. Operating Parameters - The sequence of reactions is carried out in a stirred reaction vessel under atmospheric pressure. The nitrosation reactions must be carried out at 0-5°. Reactor sizes are not known.

4. Utilities - Water, refrigeration and electricity are needed, but the required amounts are not known.

5. Waste Streams - Inevitably, through errors in operation, nitrogen oxide fumes escape into the air. Solutions of inorganic salts are discharged when the dye or pigment is recovered. The ions in these solutions may include the toxic barium ion (C.I. 10020:1). Nitrogen oxide fumes are generally allowed to escape into the air from a tall stack or pipe. Usually no effort has been made to control fluid effluents.

6. EPA Source Classification Code -

7. References - Pigment Handbook, Edited by Temple C. Patton, John Wiley & Sons, New York (1973), Volume I, Chapter I-D-a, "Pigment Green B" (C. G. Inman), pp 435-440.

NITRO DYES (C.I. 10316)

1. Function - This process serves to introduce a nitro group at the 2- and 4-positions on 1-naphthol-7-sulfonic acid. The objective is most readily achieved by first nitrosating the preferred main starting material. Simple stainless steel stirred reactors are used throughout the process.

2. Input Materials - The principal starting material is 1-naphthol-2,7-disulfonic acid. The other input materials are: nitric acid, sodium nitrite, sulfuric acid, sodium hydroxide, ice, and water. The quantities required are not known. It should be recognized that the nitrosation reaction must be carried out at 0 to 5°.

3. Operating Parameters - Conditions for this process were not given in the readily accessible literature. The nitrosation reaction would very likely be carried out at 0-5°C because this is usually the case.

4. Utilities - Electricity, steam, refrigeration and water are required, but the amounts needed are not known.

5. Waste Streams - The nitrosation reaction may lead to the emission of nitrogen oxide fumes if operations are not carried out carefully. Isolation of the intermediate nitroso compound results in an aqueous effluent laden with inorganic salts. Nitration of the intermediate also entails the emission of nitrogen oxides which are difficult to control by water scrubbing.

6. EPA Source Classification Code -

7. References - Venkataraman, K., The Chemistry of Synthetic Dyes, Academic Press, New York (1952), Volume 1, p 405.

NITRO DYES (C.I. 10338, 10345)

1. Function - The process involves the substitution of an arylamino moiety for chlorine substituted on the ortho position of an aryl nitro compound. This chlorine is highly activated, so that the replacement reaction goes readily. The product is always a yellow dye. The reactions involved can be satisfactorily carried out in steel reactors open to the air. Good stirring is necessary.

2. Input Materials - The required input materials are shown in the matrix below (Exhibit 1). The quantities of these materials needed to make 100 pounds of each dye could not be found in standard texts on dyes.

EXHIBIT 1

Color Index No.	10338	10345	10395
Component			
aniline	x		
4-chloro-3-nitrobenzenesulfonyl chloride	x		
p-aminophenol		x	
1-chloro-2,4-dinitrobenzene		x	
4-chloro-3,5,dinitrobenzoic acid			x
5-amino-2-anilinobenzene-sulfonic acid			x

3. Operating Parameters - No data are available on the detailed conditions under which the process is operated. However, the reactions are likely to be somewhat exothermic. The process is always carried out batch-wise in stirred reactors under atmospheric pressure.

4. Utilities - Electricity, steam, and water are needed, but the amounts required are not known.

5. Waste Streams - The principle waste product from making these dyes is a brine contaminated with small amounts of organic substances.

6. EPA Source Classification Code -

7. References - The Chemistry of Synthetic Dyes and Pigments, Edited by H. A. Lubs, Reinhold Publishing Company, 1955, "Miscellaneous Dyes" (S. E. Krahler), pp 255-256.

PROCESS NO. 4:
AZO DYES AND DERIVED PIGMENTS: C.I. 11000-36300

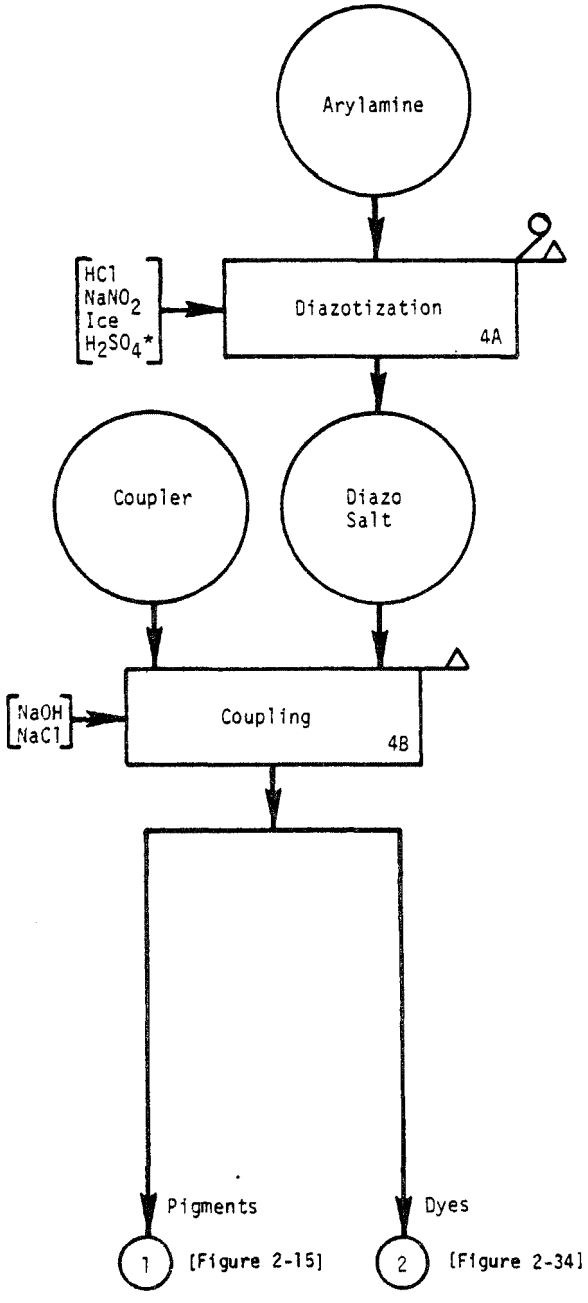

* Weakly basic anilines only.

FIGURE 2-2. FLOW CHART FOR THE PRODUCTION OF SELECTED AZO DYES AND PIGMENTS FROM VARIOUS INTERMEDIATES

AZO DYES AND PIGMENTS

1. Function - Azo dyes and pigments are the most numerous of the various classes of organic dyes and pigments. The two principle starting materials are first an arylamine, and second, an arylamine, a phenolic compound or naphthol ether, or a compound with a reactive methylene group. These starting materials are sometimes much modified by the presence of other substituents. A frequently encountered substituent group is the sulfonic acid moiety. The equipment needed for making these dyes is simple. A well stirred batch tank suffices for the reactor. Filter presses are generally used for recovering the finished products and tray driers for drying the dye and pigment presscakes.

2. Input Materials - The principle input materials are both too numerous and highly varied to be listed here. Sodium nitrite, hydrochloric acid, sulfuric acid and sodium hydroxide are the important auxiliary starting materials. Some of the starting materials are either highly carcinogenic or very toxic, and must therefore be handled with stringent precautions. Two of the most notorious of the carcinogenic starting materials are benzidine and β-naphthylamine. The effect of exposure to these chemicals is highly insidious because the cancer is not detected until many years after exposure. Today, β-naphthylamine is not manufactured in the United States. The starting materials are usually employed in ratios dictated by the chemical stoichiometry.

   A specific example of quantities used to manufacture an azo dye, chrome Blue Black U, is given in Exhibit 1.

3. Operating Parameters - No quantitative data are available on the required utilities. Note should be taken that the diazotization of amines must be carried out at 0-5°C with highly effective stirring to avoid localized overheating. Accordingly, the reactors used are simple batch tanks with effective stirrers. Ice is usually employed to attain the needed low temperature for the diazotization step.

4. Utilities - Electricity, water, and refrigeration are needed, but the amounts required are not known.

5. Waste Streams - The main waste products are inorganic salts dissolved in the aqueous effluents. Varying amounts of organic materials (both starting materials and products) are also contained in these liquids. Occasionally, nitrogen oxides are emitted in the course of the diazotization step. For the specific example used above of the manufacture of 1800 lb of chrome Blue Black U there is a waste stream of 2810 lb of aqueous solution contaminated with organic compounds created.

6. EPA Source Classification Code -

EXHIBIT 1.
MATERIALS USED FOR MAKING 1800 LB
CHROME BLUE BLACK U

Beta-naphthol	730 lb.
Sodium hydroxide (40%)	600 lb.
Water	10,000 lb.
Hydrochloric acid (20%)	500 lb.
1-amino-2-naphthol-4-sulfuric acid	1,200 lb.
Sodium chloride	200 lb.
Copper sulfate hydrate	15 lb.
Sodium nitrite	365 lb.

7. References - (a) Fierz-David, H. E. and Blangey, L., Fundamental Processes of Dye Chemistry, Translated from the Fifth Austrian Edition by P. W. Vittum, Interscience Publishers, Inc., New York (1949), Chapter II, pp 239-297. (b) The Chemistry of Synthetic Dyes and Pigments, Edited by H. A. Lubs, Reinhold Publishing Co. (1955), Chapter 3, "Azo Dyes" (S. N. Boyd, H. E. Woodward and J. F. Laucius), pp 96-98. (c) Venkataraman, K., The Chemistry of Synthetic Dyes, Academic Press, New York (1952), Volume I, pp 210-220, 480-621, 650-704, (d) Booz-Allen Applied Research, Inc., A Study of Hazardous Waste Materials, Hazardous Effects and Disposal Methods, National Technical Information Service, Springfield, Va. (1973), p. 338.

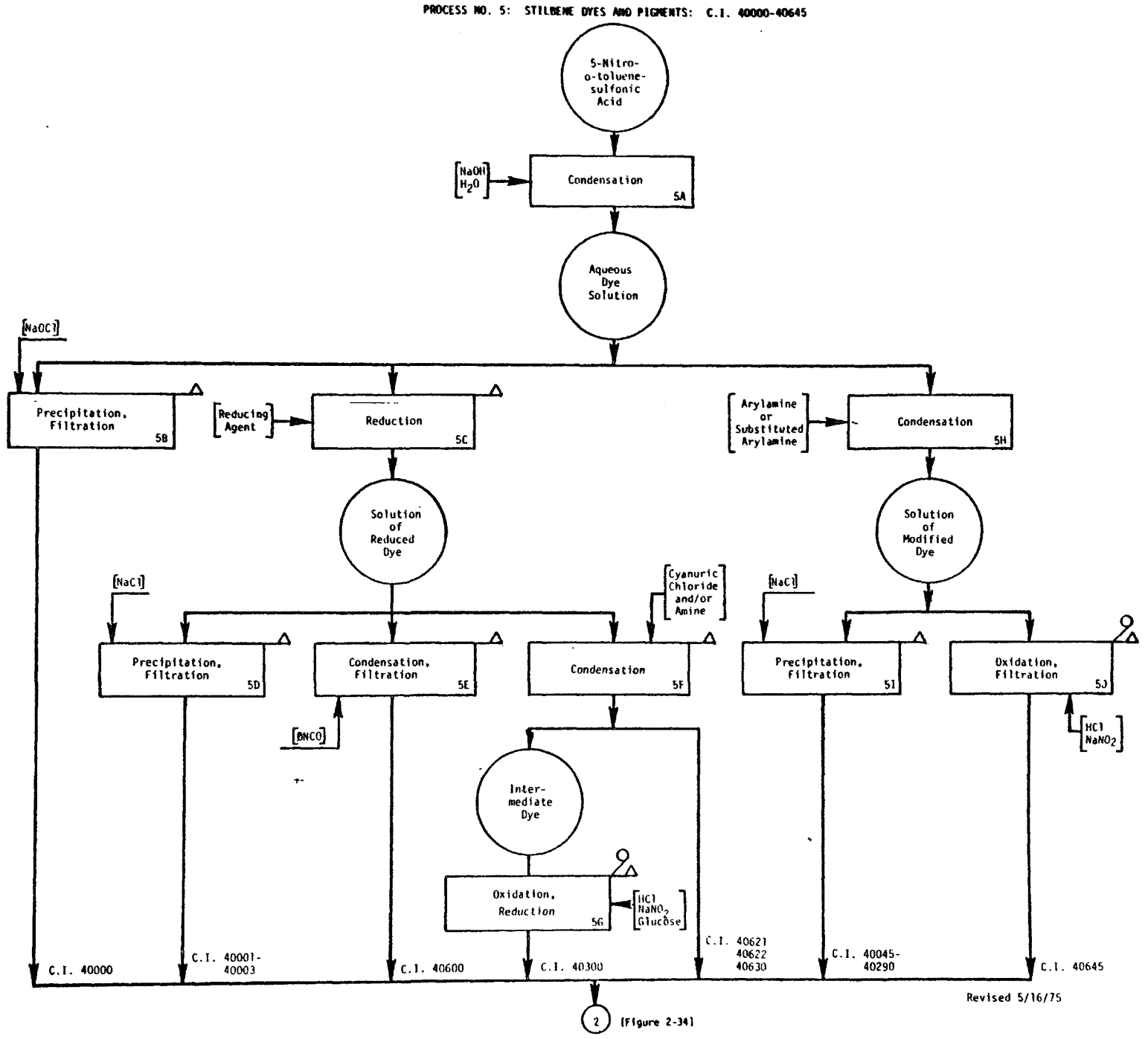

FIGURE 2-3. FLOW CHART FOR THE PRODUCTION OF SELECTED STILBENE DYES AND PIGMENTS FROM VARIOUS INTERMEDIATES

STILBENE DYES

1. Function - Although stilbene dyes are classified chemically as azo type dyes, the manufacturing process for making them is distinctly different from that used to make conventional azo products. The principal organic starting material is 5-nitro-o-toluene sulfonic acid, but cyanuric chloride, certain arylamines and benzaldehyde are also required for specific stilbene dyes. All of these dyes are made in a stirred, batch reactor constructed of iron and fitted with a reflux condenser.

2. Input Materials - A laboratory procedure for making C.I. 40000 is given in Fierz-David and Blangey. About 1.3 pound of sodium 5-nitro-o-toluene-sulfonate and 0.41 pound of sodium hydroxide is required per pound of C.I. 40000. The other required raw materials and the respective dyes made from them are shown in Table 1.

3. Operating Parameters - The reactions for making these dyes are carried out at relatively low temperatures with water as the medium. The reaction for making C.I. 40000 takes place at 65 to 75°C. The reactor capacity needed is projected to be 1.3 gallon per pound of finished dye.

4. Utilities - Electricity, water, and steam are required, but no information is available as to the necessary amounts.

5. Waste Streams - The waste streams from the manufacture of stilbene dyes are almost entirely brines containing small amounts of organic materials (both starting materials and finished dyes). The manufacture of C.I. 40645 might also result in the emission of nitrogen oxides.

6. EPA Source Classification Code -

7. References - Fierz-David, H. E. and Blangey, L., Fundamental Processes of Dye Chemistry, Translated from the Fifth Austrian Edition by P. W. Vittum, Interscience Publishers, Inc., New York (1949), p. 297; The Chemistry of Synthetic Dyes and Pigments. Edited by H. A. Lubs. Reinhold Publishing Co. (1955), Chapter 3, "Azo Dyes" (H. E. Woodward), pp 119-121; Venkataraman, K., The Chemistry of Synthetic Dyes, Academic Press, New York (1952), Volume I, pp 628-636.

Table 1. RAW MATERIALS USED FOR MAKING STILBENE DYES

Component	Derived Dyes
5-nitro-o-toluenesulfonic acid	all stilbene dyes
sodium hydroxide	all stilbene dyes
formaldehyde	40001, 40630
glycerol	40002
glucose	40002, 40300
sodium sulfide	40003
aniline	40045, 40621, 40622
3-(4'-amino phenylazo) benzenesulfonic acid	40210
4-(4'-amino phenylazo) benzenesulfonic acid	40215
4-(4'-amino-2'-methylphenylazo)-benzenesulfonic acid	40220
3-(4'-amino-5'-methoxy-2'-methyl-phenylazo) benzenesulfonic acid	40260
4-(4'-aminonaphthylazo) benzene-sulfonic acid	40290
naphthionic acid	40300
sodium nitrite, sulfuric acid	40300, 40645
phenyl isocyanate	40600
cyanuric chloride	40621, 40622, 40130
diethanolamine	40622
ammonia	40630
2-amino-1-naphthalenesulfonic acid	40645

PROCESS NO. 6:
DIARYLMETHANE AND TRIARYLMETHANE DYES AND DERIVED PIGMENTS: C.I. 41000, 41001, 42000-42170, 42595, 42640-42735

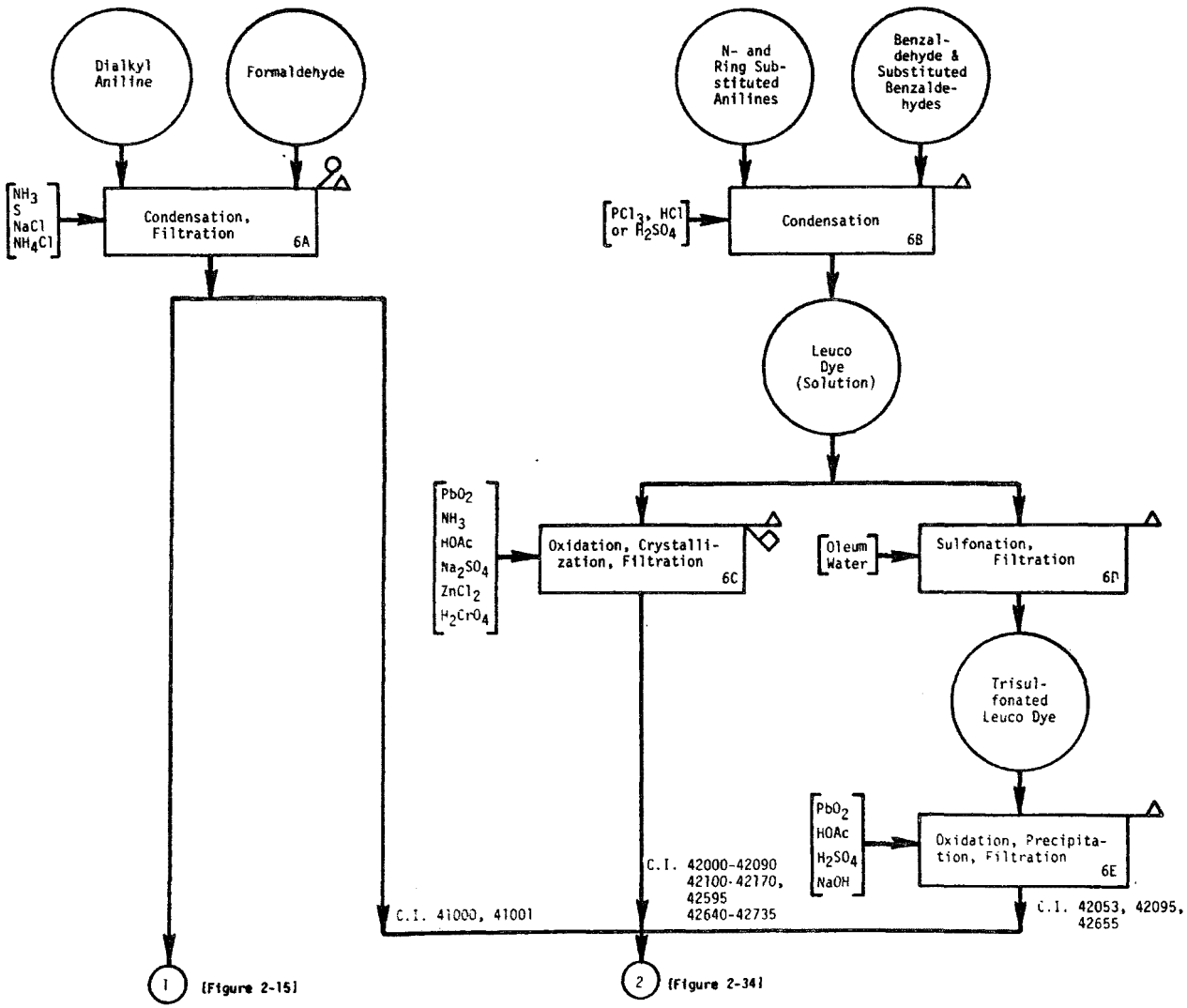

FIGURE 2-4. FLOW CHART FOR THE PRODUCTION OF SELECTED DIARYLMETHANE AND TRIARYLMETHANE DYES AND DERIVED PIGMENTS FROM VARIOUS INTERMEDIATES

SELECTED DI- AND TRIARYLMETHANE DYES FROM VARIOUS INTERMEDIATES

1. Function - Several basic dyes can be made by a primary reaction between an aromatic amine (usually disubstituted on the nitrogen) and either formaldehyde or a benzaldehyde compound. Two of the dyes (C.I. 41000 and 41001) require only a single process step, a condensation reaction. All others require a second process step following the condensation reaction. This second process step may be either an oxidation reaction or a sulfonation reaction. These dyes are all characterized by having one or more basic nitrogen moieties in the finished product. Insoluble pigments are made from some of these dyes by a reaction with dye precipitants, (cf. Process No. 18).
The processing equipment is all very simple. The primary reaction vessels are stirred, batch reactors with a glass lining and the products are recovered with ordinary filter presses.

2. Input Materials - The principal input materials are:

Organic

- Formaldehyde
- N,N-Dimethylaniline
- o-Chlorobenzaldehyde
- Benzaldehyde
- N,N-Diethylaniline
- 4-Formyl-m-benzenedisulfonic acid
- p-hydroxybenzaldehyde
- N-Ethyl-N-phenylbenzylamine
- α-(N-Ethylanilino)-m-toluenesulfonic acid
- N-Ethyl-o-toluidine
- α-N-(Ethyl-m-toluidino)-m-toluenesulfonic acid
- Acetic acid
- Potassium antimony tartrate
- Quebracho extract
- Sulfanilic acid

Inorganic

- Ammonia
- Sulfur
- Sodium chloride
- Ammonium chloride
- Zinc chloride
- Sodium hydroxide
- Sodium carbonate
- Phosphorus trichloride
- Alumina hydrate
- Lead peroxide
- Sulfuric acid
- Oleum
- Sodium dichromate

3. Operating Parameters - The operating parameters vary, depending on the exact nature of the dye being manufactured. The condensation of dimethyl (or diethyl) aniline with formaldehyde to make C.I. 41000 (or 41001) is promoted with a small amount of sulfanilic acid as catalyst. Heating the mixture of organic and inorganic ingredients for making the dyes entails very careful temperature control, achievable only with a liquid heat transfer agent. Ammonia is used in the reactor at 0.5 psig. The condensation of N- and ring-substituted anilines with benzaldehyde or substituted benzaldehydes takes place at reflux temperatures and requires long reaction times (12 hours or longer). Oxidation of the leuco base to the dye is carried out at 0°C, using ice to cool the reaction mixture on reaction conditions.

4. Utilities - Electricity, refrigeration, liquid heat transfer system, steam and water are needed, but the amounts required are not known for any of the dyes.

5. Waste Streams - The manufacture of C.I. 41000 and 41001 entails the use of ammonia, and the formation of hydrogen sulfide. These pollutants must be contained, and in a well-run plant, the hydrogen sulfide is recovered as sodium sulfide for use as a reducing agent for making other dyes.
The lead ion introduced in oxidizing leuco bases to the dyes is precipitated as lead sulfate, a solid waste product.
The liquid effluents are brines contaminated with small amounts of organic materials.

6. EPA Source Classification Code -

7. References - Fierz-David, H. E. and Blangey, L., Fundamental Processes of Dye Chemistry, Translated from the Fifth Austrian Edition by P. W. Vittum, Interscience Publishers, Inc., New York (1949), p. 137, Chapter E, 298-308; The Chemistry of Synthetic Dyes and Pigments, Edited by H. A. Lubs, Reinhold Publishing Co. (1955), Chapter 5, "Miscellaneous Dyes", (S. E. Krahler), pp 281-283; Venkataraman, K., The Chemistry of Synthetic Dyes, Academic Press, New York (1952), Volume II, pp 705-706, 711-716.

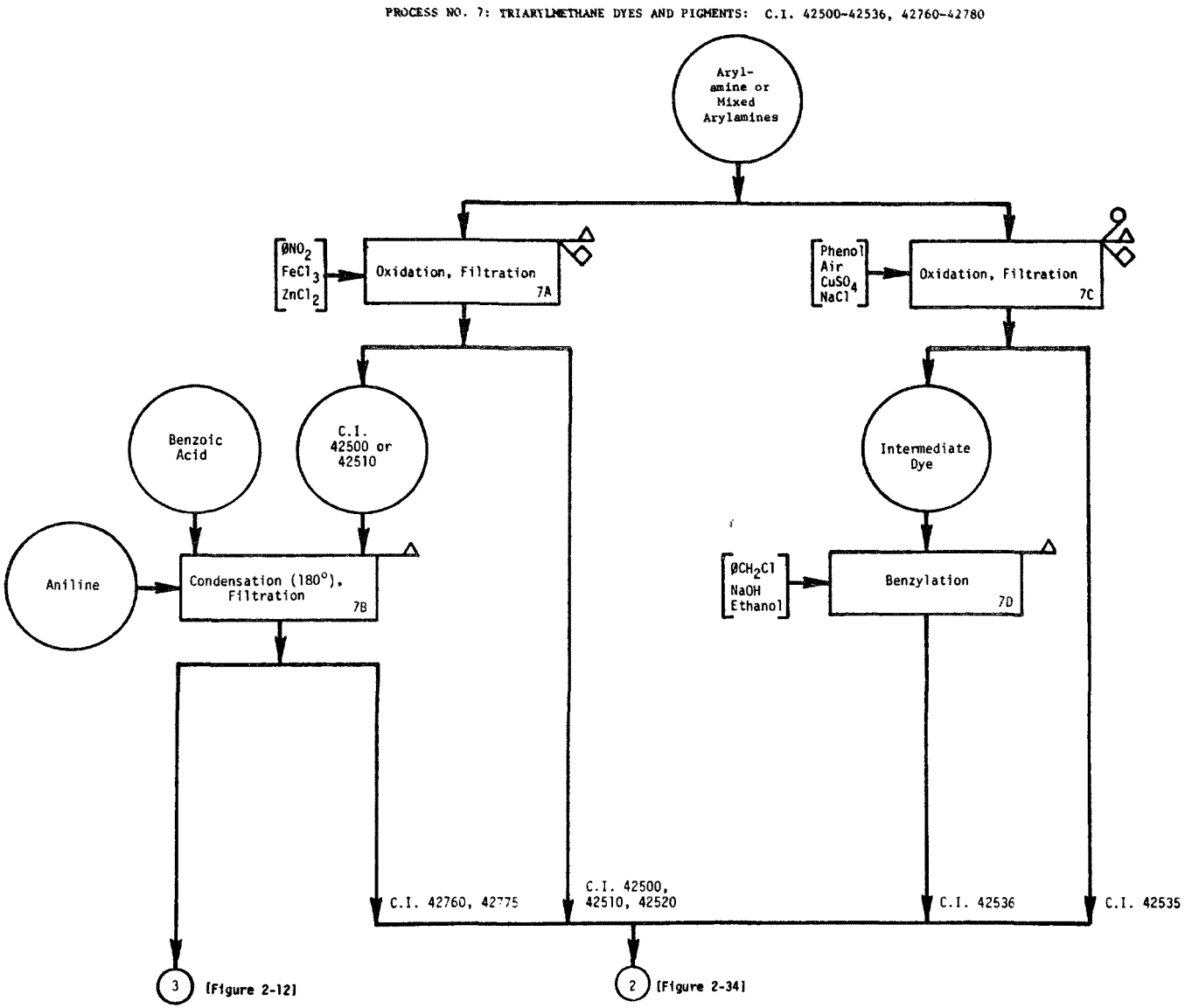

FIGURE 2-5. FLOW CHART FOR THE PRODUCTION OF SELECTED TRIARYLMETHANE DYES AND PIGMENTS FROM VARIOUS INTERMEDIATES

TRIARYLMETHANE DYES (C.I. 42500, 42536, 42760, and 42780)

1. Function - The manufacture of certain triarylmethane dyes depends primarily on a controlled oxidation of aniline, a substituted aniline or a mixture of selected arylamines. Secondary transformations on the primary product are carried out to produce some of the dyes. Stirred batch reaction vessels with glass linings serve for making these products. The dyes are separated from the reaction mixtures with standard filter presses. Some of these dyes are sulfonated to form still other dyes (cf. Process No. 15).
2. Input Materials - The starting materials needed for making these dyes are shown by the matrix below (Exhibit 1). No reliable information is available as to the quantities or raw materials needed.

3. Operating Parameters - The oxidation of arylamines with nitrobenzene is started at 60° and the temperature gradually raised to 140°, whereupon a highly exothermic reaction begins. The temperature of the reactor is controlled by stopping the heat input and spraying the vessel with cold water. The reaction mixture is then allowed to reach a temperature of 170°, with the temperature rise not exceeding 2° per hour. The total batch time is 24 hours. The conversion of C.I. 42500 to other dyes requires heating 460 parts of the intermediate dye with 2400 parts of aniline and 8.5 parts of benzoic acid for one hour at 180-182°. The excess aniline is removed by vacuum distillation. Information is not available on the details of other steps in making various dyes.

4. Utilities - Electricity, water, and steam are needed to make these colors, but the amounts required are not known.

5. Waste Streams - Air oxidation of arylamines results in all three types of waste streams. Nitrobenzene oxidation results only in solid and liquid wastes. The solid wastes are sludges containing large amounts of metal ions (copper, zinc and/or iron). The gaseous wastes from air oxidations could contain significant and hazardous amounts of toxic arylamines. The liquid wastes would be mainly brines contaminated with varying amounts of organic substances, many of which are highly colored.

6. EPA Source Classification Code -

7. References - Venkataraman, K., The Chemistry of Synthetic Dyes, Academic Press, New York (1952), Volume II, pp 717-719, 723-724.

EXHIBIT 1
STARTING MATERIALS FOR SELECTED TRIARYLMETHANE DYES AND PIGMENTS

Color Index No.	42500	42510	42520	42535	42536	42760	42775	42780
Component								
aniline	x	x				x	x	x
4,4'-methylenedianiline	x					x		x
nitrobenzene	x	x				x	x	x
ferric chloride	x					x		x
o-toluidine		x	x				x	
p-toluidine		x					x	
4,4'-methylenedi-o-toluidine			x					
hydrochloric acid	x	x	x	x	x	x	x	x
air			x					
N,N-dimethylaniline				x	x			
phenol				x	x			
sodium chloride				x	x			
copper sulfate				x	x			
benzyl chloride					x			
benzoic acid						x	x	
sulfuric acid								x

PROCESS NO. 8: TRIARYLMETHANE DYES AND PIGMENTS: 42555-42600, 44025, 44090

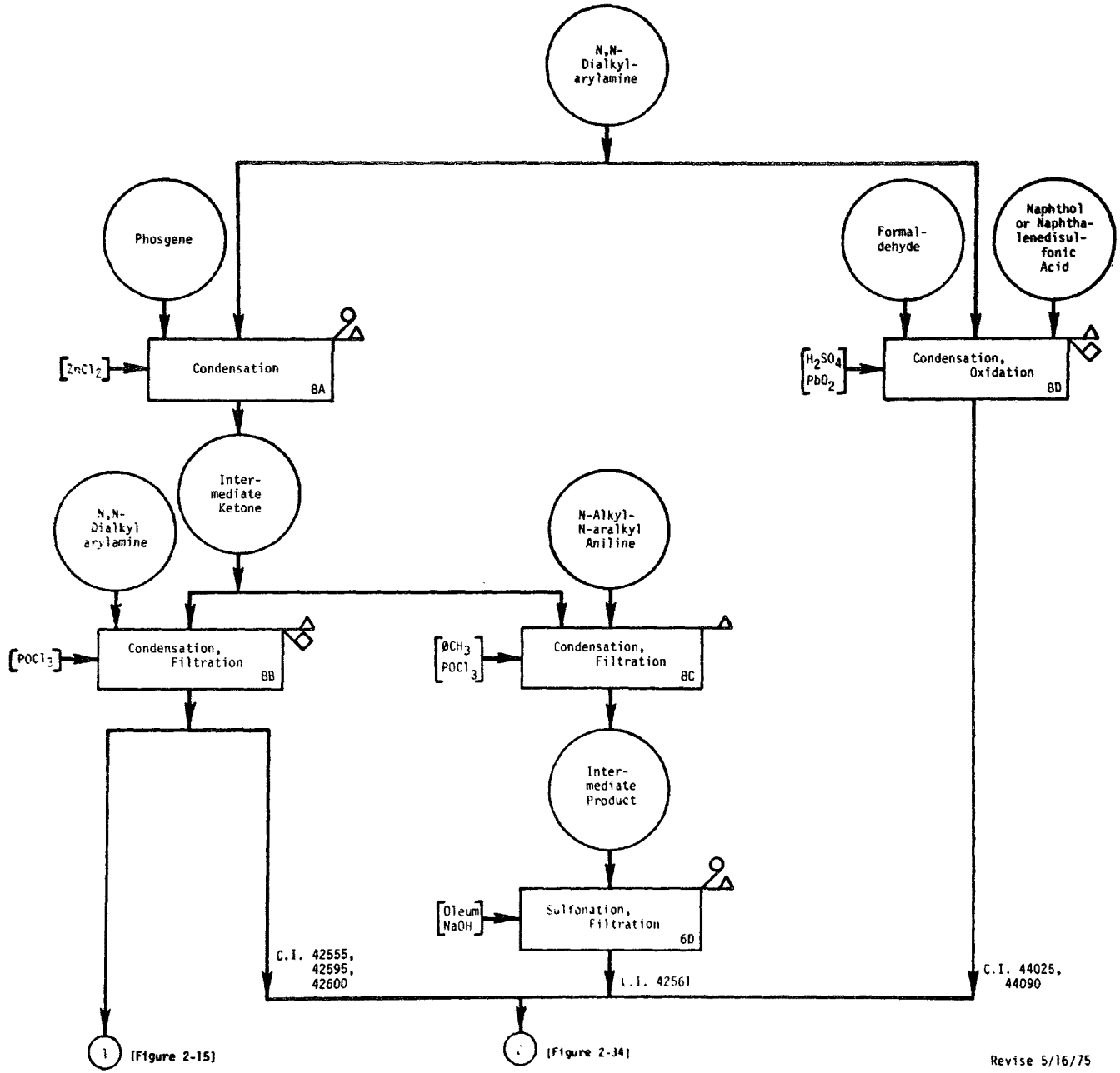

FIGURE 2-6. FLOW CHART FOR THE PRODUCTION OF SELECTED TRIARYLMETHANE DYES AND PIGMENTS FROM VARIOUS INTERMEDIATES

TRIARYLMETHANE DYES (C.I. 42555, 42561, 42595, 42600, 44025, and 44090)

1. Function - The triarylmethane dyes in this group also require an N,N-dialkylarylamine and formaldehyde among the primary starting materials, as in the case of some of the dyes made with Process No. 6. This process differs from Process No. 6 in respect to other important starting materials, which include phosgene 2,7-naphthalene disulfonic acid and 2-naphthol-3,6 (or 6,8)-disulfonic acid. Stirred batch reaction vessels lined with glass are needed for these reactions. Some of these dyes are converted to pigments with a dye precipitant (cf. Process No. 18).
2. Input Materials - The preparation of the ketone intermediate ("Michler's ketone") from phosgene and N,N-dimethyl aniline (N,N-diethylaniline is used to make a tetraethyl analog) requires 4 moles of the organic base for each mole of phosgene. The excess base serves to bind the liberated hydrogen chloride, and it is subsequently recovered. The yield of ketone is 76% of theoretical. The matrix below (Exhibit 1) shows the starting materials necessary to make the several dyes. The amounts of materials needed to make 100 pounds of these dyes is not known.

3. Operating Parameters - The reaction to make Michler's ketone is started at 20° and the temperature increased over a period of 90 hours to 80°. All reactions are operated under atmospheric pressure.

4. Utilities - Electricity, water, and steam are needed to make these colors, but the amounts required are not known.

5. Waste Streams - The use of phosgene may lead to small amounts of gaseous emissions. The use of lead peroxide as oxidizing agent results in a lead sulfate precipitate which must be recovered and a brine which contains lead. A solid distillation residue is encountered in making intermediate ketones. All other effluents are brines containing small amounts of organic materials.

6. EPA Classification Code -

7. References - Venkataraman, K., The Chemistry of Synthetic Dyes, Academic Press, New York (1952), Volume I, pp 136-137; Volume II, pp 721-722; Fierz-David, H. E. and Blangey, L., Fundamental Processes of Dye Chemistry, Translated from the Fifth Austrian Edition by P. W. Vittum, Interscience Publishers, Inc., New York (1949), Chapter E, pp 306-307.

EXHIBIT 1
STARTING MATERIALS FOR MAKING SELECTED TRIARYLMETHANE DYES AND PIGMENTS

Color Index No.	42555	42561	42595	42600	44025	44090
Components						
phosgene	x	x	x	x		
dimethylaniline	x	x				x
zinc chloride	x	x	x	x		
phosphorus oxychloride	x		x	x		
N-methyl-N-phenylbenzylamine		x				
sulfuric acid		x			x	
sodium chloride		x			x	
N-ethyl-1-naphthylamine			x			
diethylaniline			x	x	x	
formaldehyde					x	x
2,7-naphthalenedisulfonic acid					x	
lead peroxide					x	x
2-naphthol-3,6(or 6,8)-disulfonic acid						x

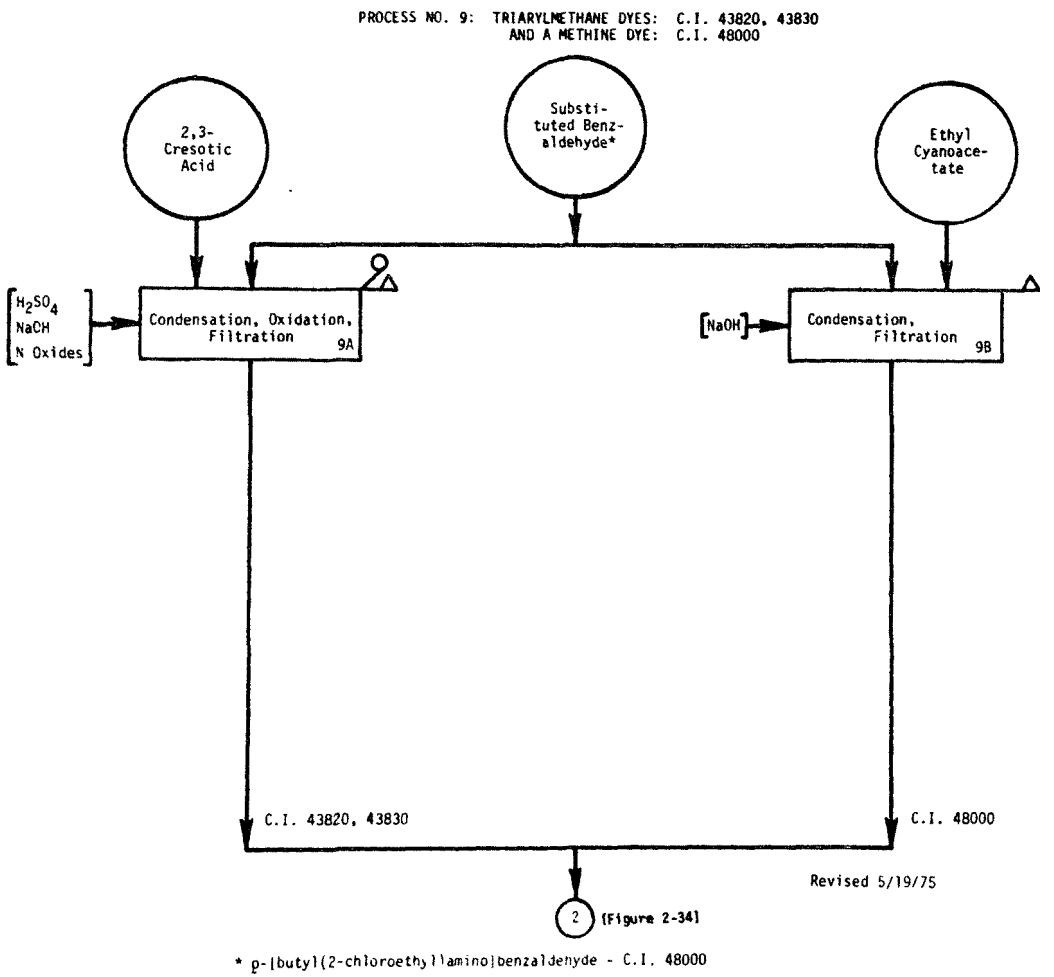

FIGURE 2-7. FLOW CHART FOR THE PRODUCTION OF SELECTED TRIARYLMETHANE AND METHANE DYES FROM VARIOUS INTERMEDIATES

TRIARYLMETHANE DYES (C.I. 43820, 43830) AND A METHINE DYE (C.I. 48000)

1. Function - The manufacture of these three dyes share in common the use of a substituted benzaldehyde compound as one of the starting materials. Only a single process step is involved in their manufacture. The two triphenylmethane dyes differ from those made by processes 6 and 7 in that no organic base is involved in their manufacture. A glass-lined vessel is required in the manufacture of the two triarylmethane dyes. The reaction vessel used in making C.I. 48000 can be made of iron. All reactions are run at less than 100° at atmospheric pressure.

2. Input Materials - The needed raw materials are shown below (Exhibit 1). The amounts required are not known.

EXHIBIT 1. STARTING MATERIALS NEEDED TO MAKE C.I. 43820, 43830, and 48000

Color Index No.	43820	43830	48000
Components			
o-formylbenzenesulfonic acid	x		
2,3-cresotic acid	x	x	
sulfuric acid	x	x	
sodium nitrite	x	x	x
2,6-dichlorobenzaldehyde		x	
p-[butyl(2-chloroethyl)amino] benzaldehyde			x
ethyl cyanoacetate			x
sodium hydroxide			x

3. Operating Parameters - No information could be found regarding reaction conditions.

4. Utilities - In the absence of information regarding reaction conditions, the required utilities cannot be identified with certainty. Electricity, steam, and water are probably needed.

5. Waste Streams - The use of nitrogen oxides in making the two triphenylmethane dyes would likely lead to some noxious gas emissions. Brines containing small amounts of organic materials would arise from making each of the three dyes.

6. EPA Source Classification Code -

7. References - The Chemistry of Synthetic Dyes and Pigments, Edited by H. A. Lubs, Reinhold Publishing Company (1955), Chapter 5, "Miscellaneous Dyes" (S. E. Krahler), pp 249-285.

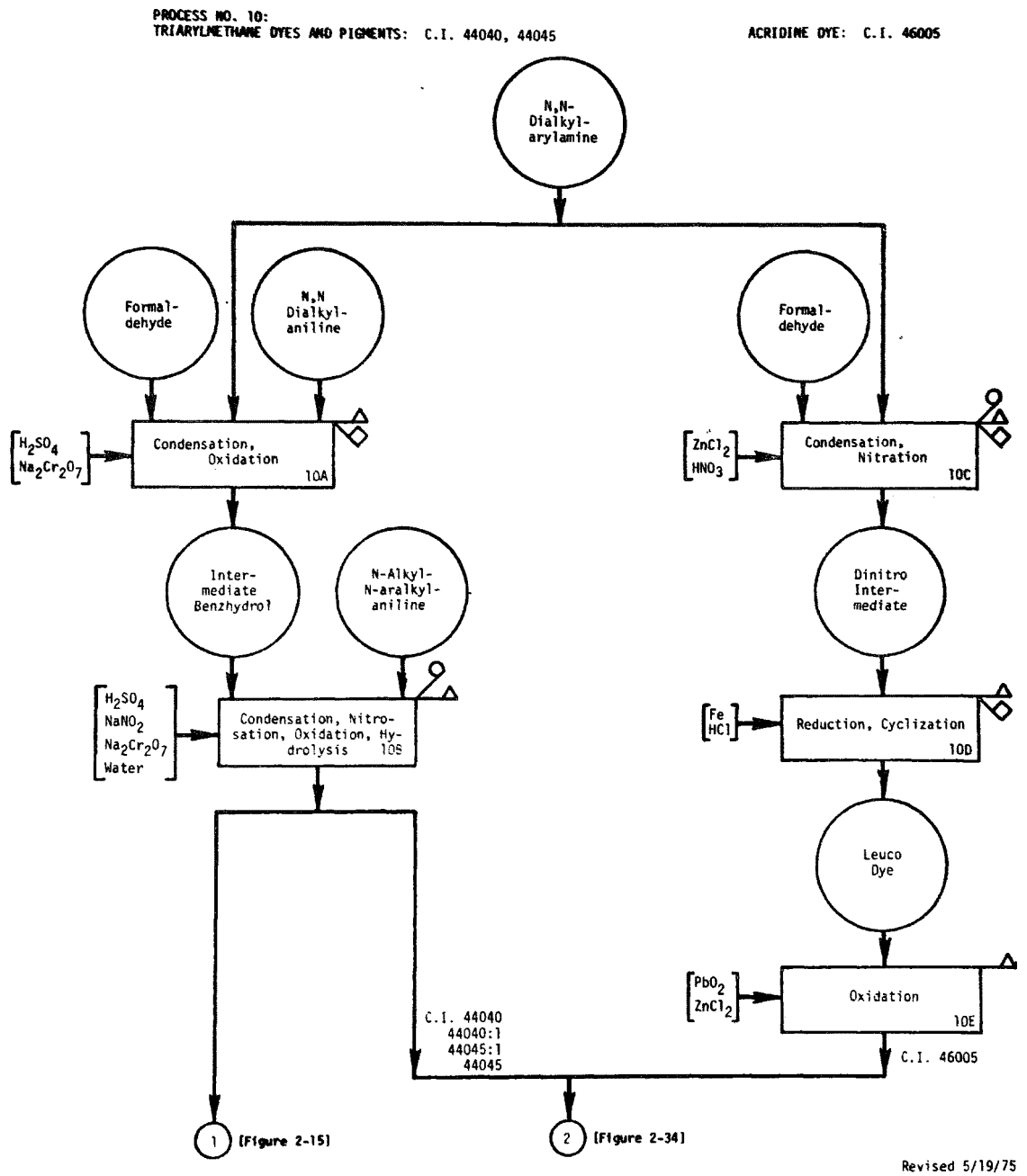

FIGURE 2-8. FLOW CHART FOR THE PRODUCTION OF SELECTED TRIARYLMETHANE AND ACRIDINE DYES AND PIGMENTS FROM VARIOUS INTERMEDIATES

TRIARYLMETHANE DYES AND PIGMENTS (C.I. 44040 AND 44045) AND AN ACRIDINE DYE (C.I. 46005)

1. Function - The manufacture of triarylmethane dyes by this process shares in common with Process Numbers 6 and 8 the use of formaldehyde and an N,N-dialkylaniline as starting materials. However, the chemical operations are somewhat different even though the final products fall into the same general chemical classification. As before, simple stirred batch reaction vessels with a glass lining are adequate for this process chemistry. The primary raw materials (formaldehyde, an N,N-dialkyl-aniline and an N-alkyl-N-aralkyl-aniline) are condensed in two successive process steps.

2. Input Materials - The starting materials needed to make these dyes are shown in the matrix below (Exhibit 1). No information could be obtained on the amounts required to make 100 pounds of these colors. No information regarding the required proportions of starting materials is available in readily accessible literature.

3. Operating Parameters - No information could be found regarding operating parameters.

4. Utilities - It is surmised that electricity, steam, and water are needed to make these colors. The amounts needed are not known.

5. Waste Streams - The noxious gas emission from the manufacture of these dyes and pigments will always consist of nitrogen oxides and small amounts of formaldehyde. The liquid effluents will be brines containing heavy metal ions (lead, zinc, or chromium). Solid wastes will be distillation residues from the condensation of formaldehyde with the N,N-dialkylanilines, and precipitated lead sulfate.

6. EPA Source Classification Code -

7. References - None.

EXHIBIT 1
RAW MATERIALS NEEDED TO MAKE C.I. 44040, 44045 and 46005

Components / Color Index No.	44040	44045	46005
formaldehyde	x	x	
dimethylaniline	x	x	x
sodium dichromate	x	x	
sulfuric acid	x	x	
N-ethyl-1-naphthylamine	x		
sodium nitrite	x	x	
N-phenyl-1-naphthylamine		x	
zinc chloride			x
formaldehyde			x
lead peroxide			x
hydrochloric acid			x
iron			x

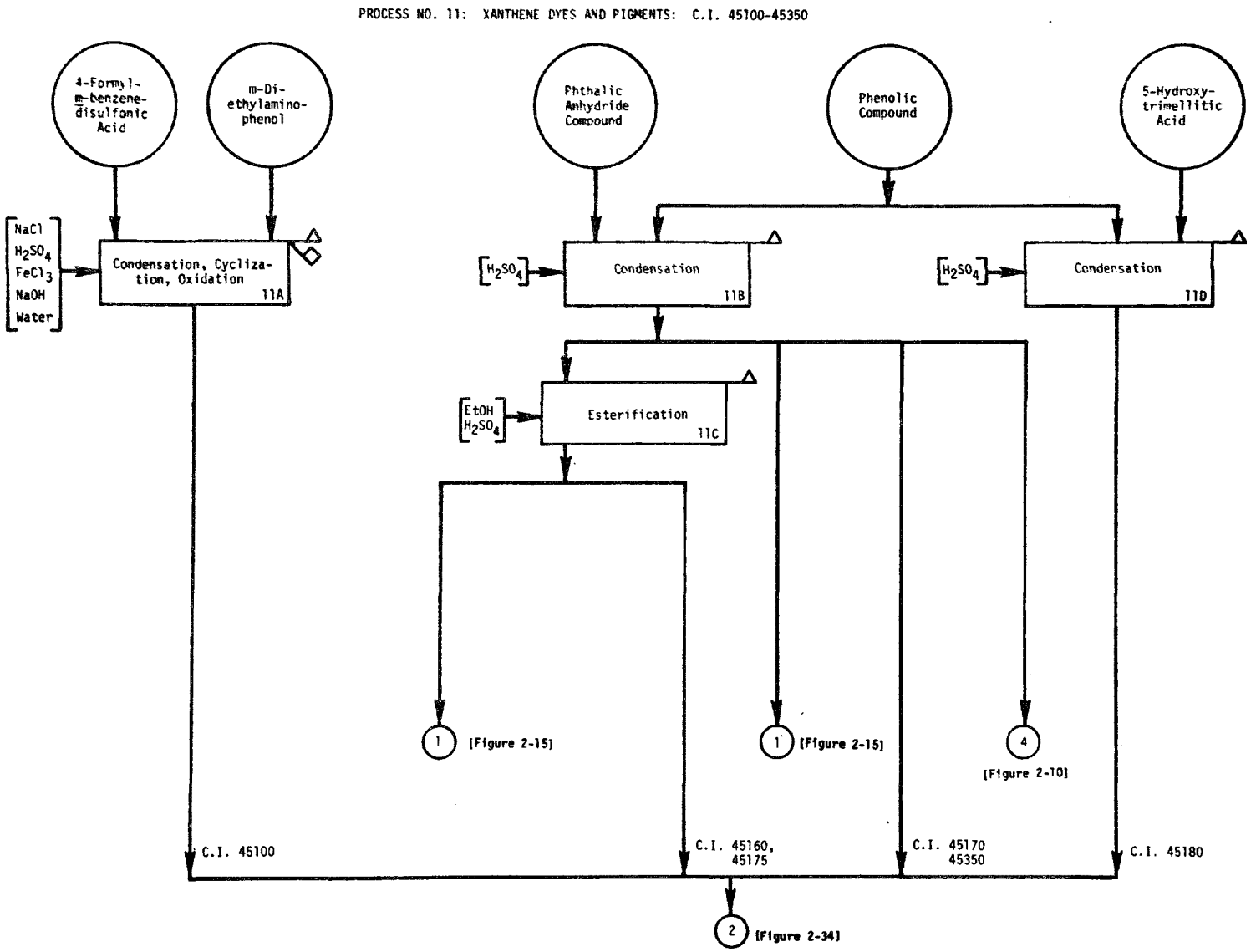

FIGURE 2-9. FLOW CHART FOR THE PRODUCTION OF SELECTED XANTHENE DYES AND PIGMENTS FROM VARIOUS INTERMEDIATES

XANTHENE DYES (C.I. 45100-45350)

1. Function - This process for making dyes results directly in only six individual organic chemical species. The process for making these colors may involve as many as three steps.
Certain other related dyes and pigments are made from these species by halogenation (cf Process No. 13). The required reactions are carried out under atmospheric pressure in stirred batch reaction vessels lined with glass.

2. Input Materials - The starting materials needed to make these dyes and pigments are shown in the matrix below (Exhibit 1). The quantities needed to make 100 pounds of the dyes are not known.

EXHIBIT 1. STARTING MATERIALS NEEDED TO MAKE XANTHENE DYES

Color Index No.	45100	45160	45170	45175	45180	45350
Component						
4-formyl-m-benzenedi-sulfonic acid	x					
m-diethylaminophenol	x		x	x	x	
sulfuric acid	x	x	x	x	x	x
ferric chloride	x					
3-ethylamino-p-cresol		x				
phthalic anhydride		x	x	x		x
ethanol		x		x		
alumina hydrate			x			
o-dichlorobenzene					x	
5-hydroxytrimellitic acid						
resorcinol						x

3. Operating Parameters - The initial condensation reaction to make C.I. 45100 is carried out at 100° over a period of 18 hours with 30% sulfuric acid. Cyclization of the intermediate product is accomplished with 90% sulfuric acid in 2 hours. The initial condensation reaction to make the other dyes is carried out with a 100% stoichiometric excess of the acid component which is later recovered. The aminophenol is added gradually to the other component at 150-180° over a period of 3 hours. Cyclization of the intermediate product is accomplished with 78% sulfuric acid at 175-180° in 3 hours time. No information is available about the quantities of starting materials per pound of product or the size of equipment used. The finished dye is salted out of the drowned reaction mixture with sodium chloride.

4. Utilities - Electricity, steam, and water are required, but the amounts needed are not known.

5. Waste Streams - The waste streams are mainly brines contaminated with small amounts of organic chemicals, some of which are highly colored. A sludge of iron oxide will also result from the use of ferric chloride as an oxidation reagent.

6. EPA Source Classification Code -

7. References - Venkataraman, K., The Chemistry of Synthetic Dyes, Academic Press, New York (1952), Volume II, pp 746, 750-755.

PROCESS NO. 12: HALOGENATION OF DYES: C.I. AS SHOWN BELOW

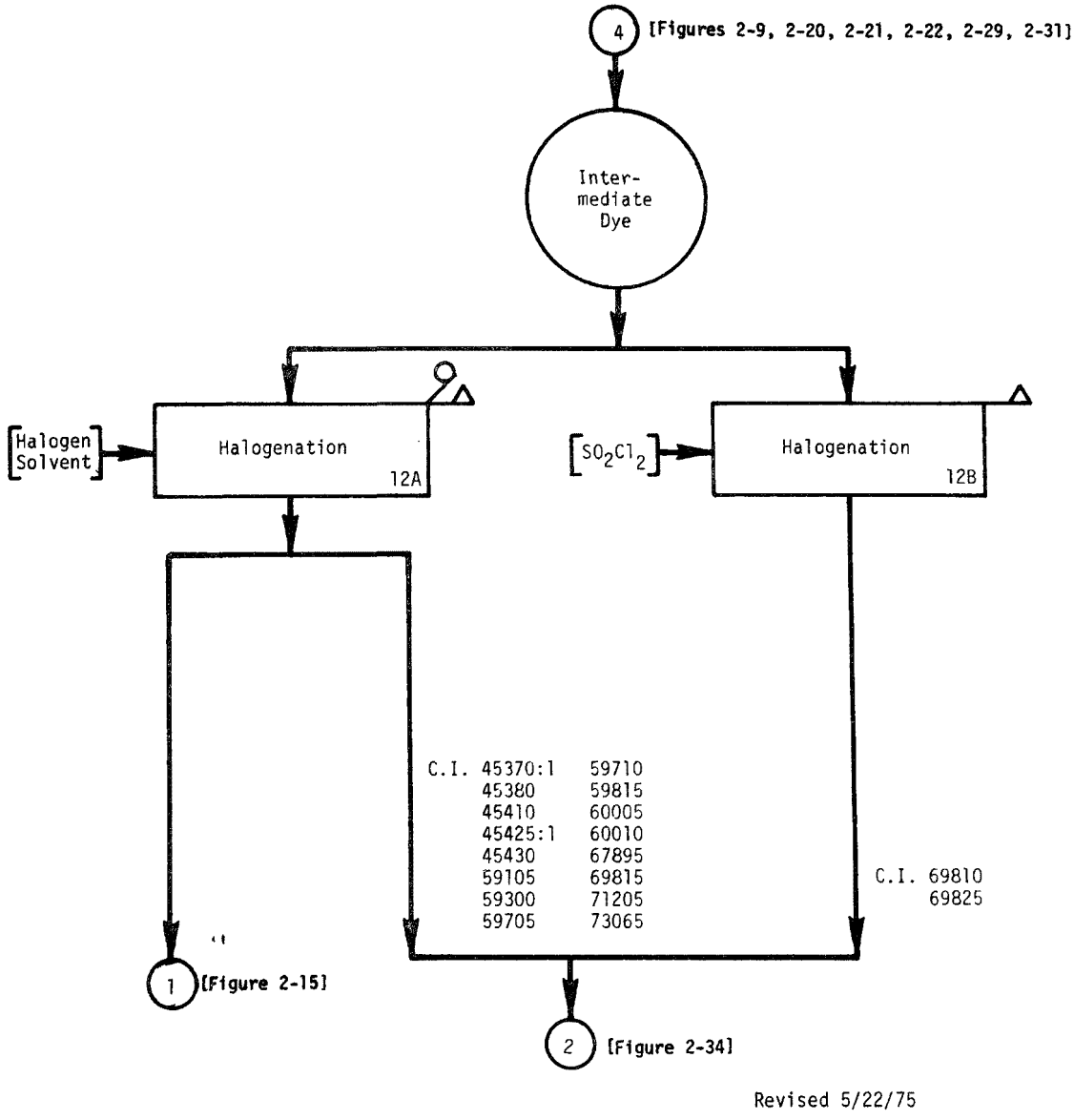

Revised 5/22/75

FIGURE 2-10. FLOW CHART FOR THE PRODUCTION OF DYES AND PIGMENTS BY HALOGENATION OF SELECTED DYES

HALOGENATION OF DYES

1. Function - The substitution of chlorine, bromine, or iodine for hydrogen in in a dye molecule often has an important and desirable effect on the properties of a dye, as well as an influence on the properties of a pigment made from the halogenated dye. The halogenated product is obtained by treating the simple dye itself with halogen or a halogen carrying compound under suitable conditions. The reactions involved can usually be operated in iron equipment provided that moisture is rigorously excluded. Glass-lined equipment is often used, however. Water scrubbers are generally used to trap the effluent hydrogen halide which is formed in most cases.

2. Input Materials - The principal input materials are a halogen (chlorine, bromine, or iodine, or a compound which functions as a halogen source (typically, sulfuryl chloride), and a solvent medium for the reaction, such as nitrobenzene, sodium hydroxide in water or alcohol solution, chlorosulfonic acid, sulfuric acid, trichlorobenzene, molten aluminum chloride, and the like. This process can usually be operated in iron equipment provided that moisture is rigorously excluded. Batch reactors are used in all instances. Only half of the halogen used appears in the product. The remaining amount is converted to the hydrogen halide. When sulfuryl chloride is used, both sulfur dioxide and hydrogen chloride are by-products.

3. Operating Parameters - Halogenations are generally carried at temperatures in the range of 40 to 55°C. However, a few cases require much higher temperatures in the range of 155-190°C. No information is available regarding the size of equipment used.

4. Utilities - Electricity, steam, and water are needed, but the amounts required are not known.

5. Waste Streams - The waste streams are principally aqueous solutions of hydrogen halide. When the halogenation is done in the presence of sodium hydroxide, the hydrogen halide is of course transformed to the sodium halide. Bromine and iodine are both so valuable that the by-product halides are carefully recovered. The waste streams are usually contaminated with small amounts of highly colored products.

6. EPA Source Classification Code -

7. References - Venkataraman, K., The Chemistry of Synthetic Dyes, Academic Press, New York (1952), Volume II, pp 940, 965, 971-2, 1126, 1132-1133.

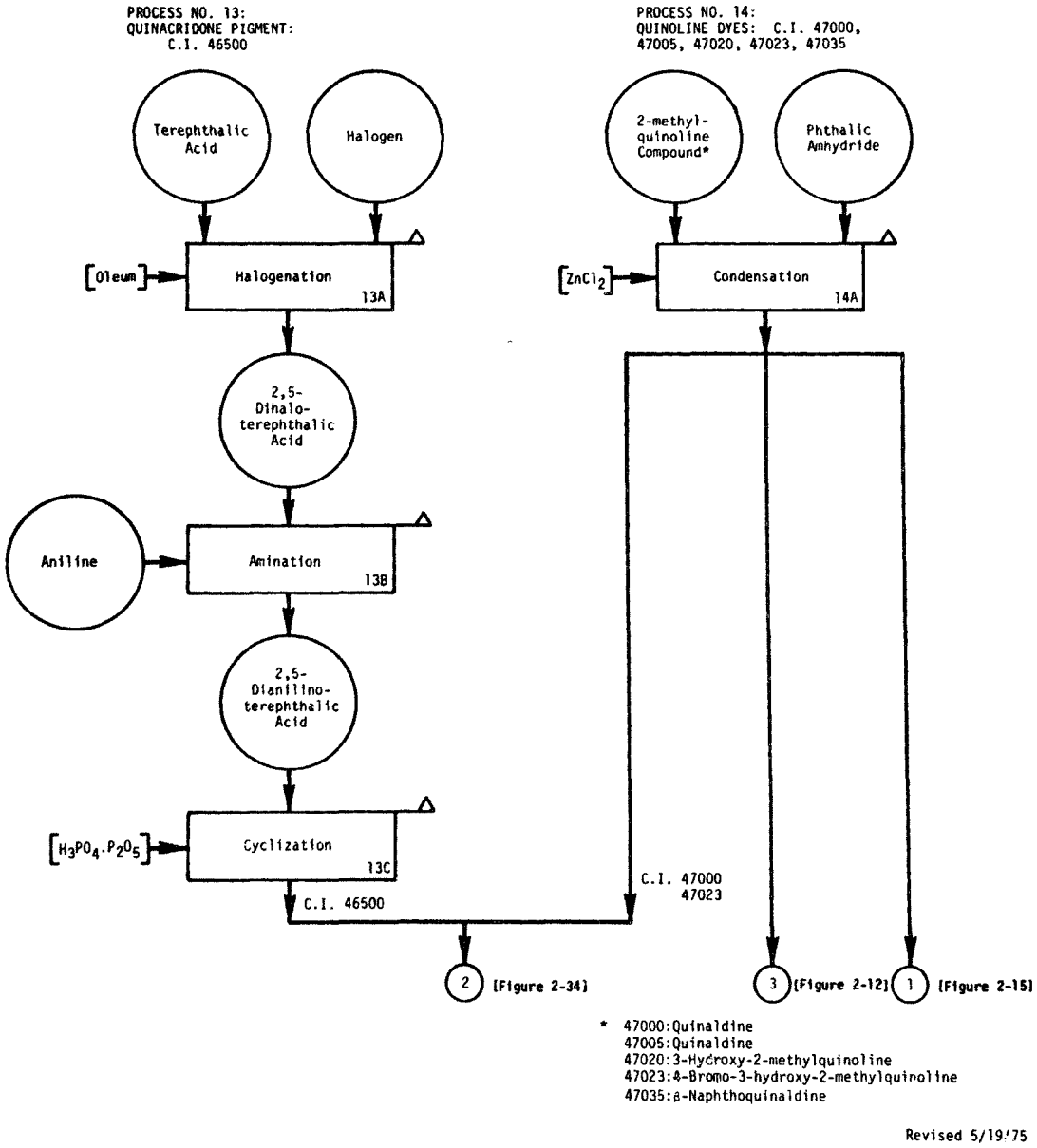

FIGURE 2-11. FLOW CHART FOR THE PRODUCTION OF A QUINACRIDONE PIGMENT AND SELECTED QUINOLINE DYES FROM VARIOUS INTERMEDIATES

QUINACRIDONE PIGMENT (C.I. 46500)

1. Function - The manufacture of this pigment is a very isolated process. The intermediates are not used to make any other dyes or pigments. There are three steps in the process: (1) halogenation of terephthalic acid, (2) reaction of aniline with the 2,5-dihaloterephthalic acid and (3) cyclization of the 2,5-dianilinoterephthalic acid to the finished pigment. The reactions are all carried out in batch type stirred reaction vessels made of iron.

2. Input Materials - The halogen used may be either bromine or chlorine. Bromine is a more costly halogen, but the use of bromine leads to better yields and milder reaction conditions. The necessary raw materials are: aniline, halogen (chlorine, bromine, iodine or sulfuryl chloride), terephthalic acid, phosphoric anhydride, and phosphoric acid. No data could be found on amounts of materials used per unit of product.

3. Operating Parameters - The exact conditions used by industry for the manufacture of quinacridone pigment are not given in the literature.

4. Utilities - No information is available regarding the required utilities.

5. Waste Streams - The waste streams from the manufacture of this pigment are brines containing small amounts of organic chemicals, and strongly acidic wastes from the halogenation and cyclization steps.

6. EPA Source Classification Code -

7. References - Labana, S. S. and Labana, L. L., Chem. Rev. 67 (1), 1-18 (1967).

QUINOLINE DYES

1. Function - The manufacture of quinoline dyes involves the condensation of phthalic anhydride with the active methyl group on a 2-methylquinoline compound. The chemistry involved is not related to any which has been previously described, even though condensations with phthalic anhydride were involved in Process No. 10, but the condensation reaction step is similar to that employed in Process No. 10. The reactors are stirred batch vessels with a glass lining.

2. Input Materials - The principal starting materials are phthalic anhydride and a 2-methylquinoline compound as shown in Table I below.

TABLE I. QUINOLINE COMPOUNDS NEEDED FOR VARIOUS DYES

Dye C.I. No.	Quinoline Compound
47000	quinaldine
47005	quinaldine
47020	3-hydroxy-2-methylquinoline
47023	4-bromo-3-hydroxy-2-methylquinoline
47035	β-naphthoquinaldine

Zinc chloride is used to catalyze the condensation reaction. No information is available as to the quantities of starting materials used per unit of product.

3. Operating Parameters - The condensation reaction takes place at 220°C. No solvent is required.

4. Utilities - A hot liquid heat transfer system is required, together with electricity and water in unknown amounts.

5. Waste Streams - No reliable information could be adduced from readily accessible literature regarding the waste streams. It seems likely that the dyes are salted out, and in consequence the only waste streams would be brines contaminated with small amounts of organic materials, some of which are highly colored.

6. EPA Source Classification Code -

7. References - The Chemistry of Synthetic Dyes and Pigments, Edited by H. A. Lubs, Reinhold Publishing Co. (1955), Chapter 5, "Miscellaneous Dyes" (S. E. Krahler) pp 261-263; Venkataraman, K., The Chemistry of Synthetic Dyes, Academic Press, New York (1952), Volume II, p 1197.

PROCESS NO. 15: SULFONATION OF DYES AND PIGMENTS: C.I. AS SHOWN BELOW

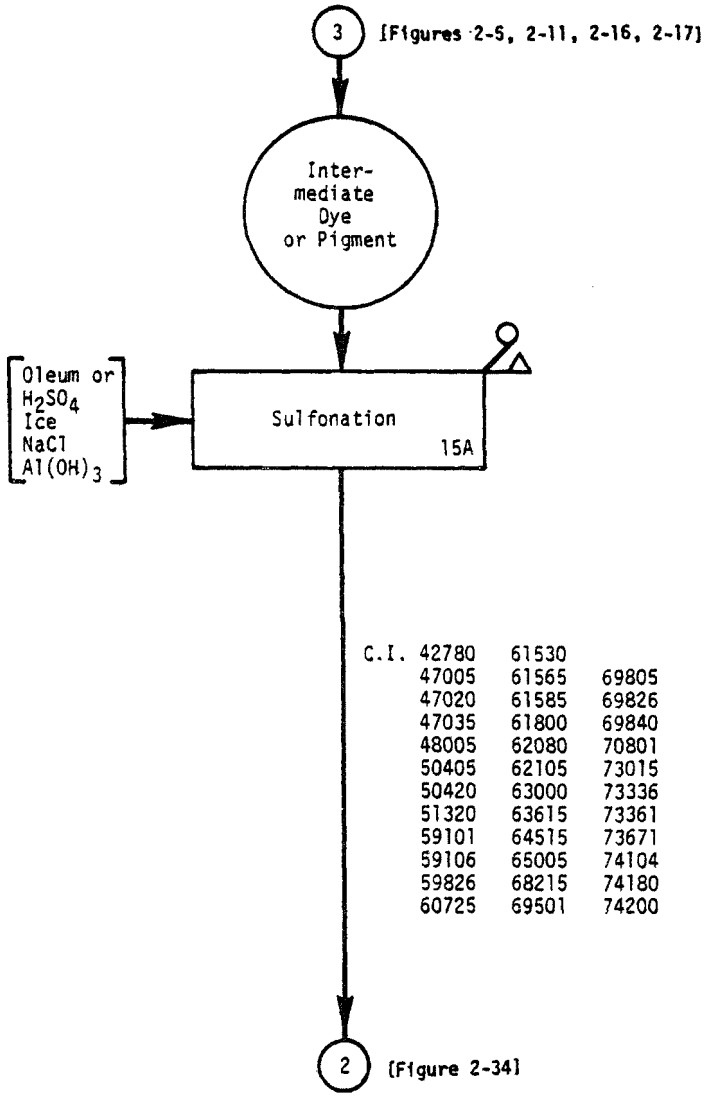

Revised 5/20/75

FIGURE 2-12. FLOW CHART FOR THE PRODUCTION OF DYES AND PIGMENTS BY SULFONATION OF SELECTED DYES AND PIGMENTS

SULFONATION OF DYES

1. Function - Over thirty dyes can be treated in a single process step with either sulfuric acid or oleum, and one or more sulfonic acid groups introduced into the dye molecule. The product of such a sulfonation often shows desirable properties not found in the parent dye. Stirred batch reactors made of iron or steel are usually satisfactory for these reactions.

2. Input Materials - The principal input materials required are: oleum (or concentrated sulfuric acid) and the antecedent dye. In most instances, the sulfonated dye must be converted to the sodium salt by brine washing and some of the dyes can be made into pigments by forming other salts which are insoluble (cf Process No. 18). A large excess of oleum (or sulfuric acid) is generally used. In a typical case, 500 pounds of 16 percent oleum is used for the sulfonation of 100 pounds of dye. In a few cases, boric acid is used to catalyze the sulfonation. The finished reaction mixture is diluted by pouring it into an ice-water slurry, thereby precipitating the product.

3. Operating Parameters - The important processing variables are: (1) nature of the sulfonation reagent and (2) reaction temperature. Some dyes can be sulfonated at 20 to 30°C with a sulfuric acid concentration as low as 80 percent. Other dyes may require oleum at a concentration as high as 15 to 20 percent and a significantly higher reaction temperature. No further data are available on reaction parameters.

4. Utilities - Electricity, refrigeration, steam and water are required, but the amounts needed are not known.

5. Waste Streams - The principal waste streams are dilute sulfuric acid and brine solutions. Both of these will be contaminated with small amounts of organic chemicals, some of which will be highly colored. The waste dilute acid may find use in many plants and be discharged ultimately as a brine, but it could also be advantageously concentrated and reused. Sulfur trioxide emissions may result in some operations from the use of oleum as sulfonating reagent.

6. EPA Source Classification Code -

7. References - The Chemistry of Synthetic Dyes and Pigments, Edited by H. A. Lubs, Reinhold Publishing Co. (1955), Chapter 5, "Miscellaneous Dyes" (S. E. Krahler), p 282; Chapter 7, "Anthraquinone Acid Dyes" (E. C. Buxbaum), pp 394-397; Chapter 10, "Phthalocyanine Dyes" (W. S. Struve), pp 609-610.

PROCESS NO. 16:
POLYMETHINE DYES: C.I. 48013, 48015, 48020, 48035, 48040, 48055, 48070, 48100

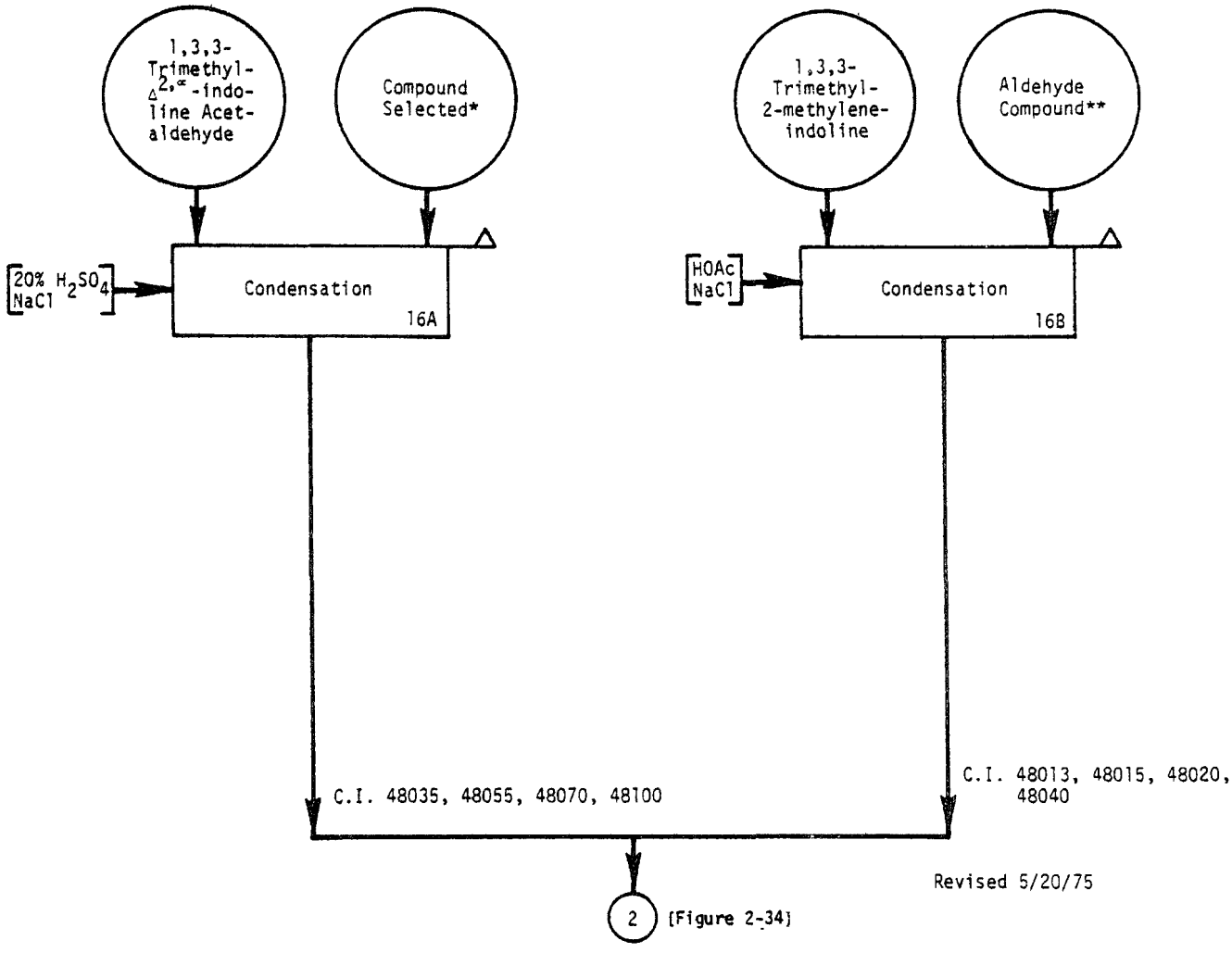

Revised 5/20/75

* Compounds condensed with 1,3,3-trimethyl-$\Delta^{2,\alpha}$-indoline acetaldehyde:-
48035: 2-Methylindole
48055: 2,4-Dimethyoxyaniline
48070: Sodium formate
48100: 1,2,3,4-Tetrahydrocarbazole

** Compounds condensed with 1,3,3-trimethyl-2-methyleneindoline:-
48013: p-Diethylaminobenzaldehyde
48015: p-[(2-Chloroethyl)methylamino]benzaldehyde
48020: 4-[(2-Chloroethyl)ethylamino]-o-tolualdehyde
48040: 1-Methyl-2-phenyl-3-indolecarboxyaldehyde

FIGURE 2-13. FLOW CHART FOR THE PRODUCTION OF SELECTED POLYMETHINE DYES FROM VARIOUS INTERMEDIATES

POLYMETHINE DYES

1. Function - These dyes are made in a single process step by condensing two organic chemicals selected as shown in Table 1:

TABLE 1. POLYMETHINE DYES

Components A.	Components B	Dye C.I. Number
1,3,3-trimethyl-$\Delta^{2,\alpha}$-indoline acetaldehyde	2-methylindole	48035
	2,4-dimethoxyaniline	48055
	sodium formate	48070
	1,2,3,4-tetrahydrocarbazole	48100
1,3,3-trimethyl-2-methyleneindoline	p-diethylaminobenzaldehyde	48013
	p-[(2-chloroethyl)methylamino]-benzaldehyde	48015
	4-[(2-chloroethyl)ethylamino]-benzaldehyde	48020
	1-methyl-2-phenyl-3 indole-carboxaldehyde	48040

Stirred batch reactors made of iron are adequate for carrying out the required reactions.

2. Input Materials - In addition to the principal starting materials shown in Table 1 above, 20 percent sulfuric acid is used as condensation for the dyes made from 1,3,3-trimethyl-$\Delta^{2,\alpha}$- indoline acetaldehyde and glacial acetic acid as condensation catalyst for dyes made from 1,3,3-trimethyl-2-methylene-indoline. All dyes are salted out of the reaction mixture and filtered from the mother liquors. No data could be found on the amounts of starting materials needed.

3. Operating Parameters - The only reference to operating parameters gave 100°C as the temperature for the condensation reaction in making C.I. No. 48015.

4. Utilities - Electricity, steam, and water are needed, but the amounts necessary are not known.

5. Waste Streams - The only pollution problems in making these dyes would arise from the discharge of acidic brines containing small amounts of organic chemicals, some of which would be highly colored.

6. EPA Source Classification Code -

7. References - The Chemistry of Synthetic Dyes and Pigments, Edited by H. A. Lubs, Reinhold Publishing Co. (1955), Chapter 5, "Miscellaneous Dyes" (S. E. Krahler), p 250.

PROCESS NO. 17: THIAZOLE DYES AND PIGMENTS: C.I. 49000-49010

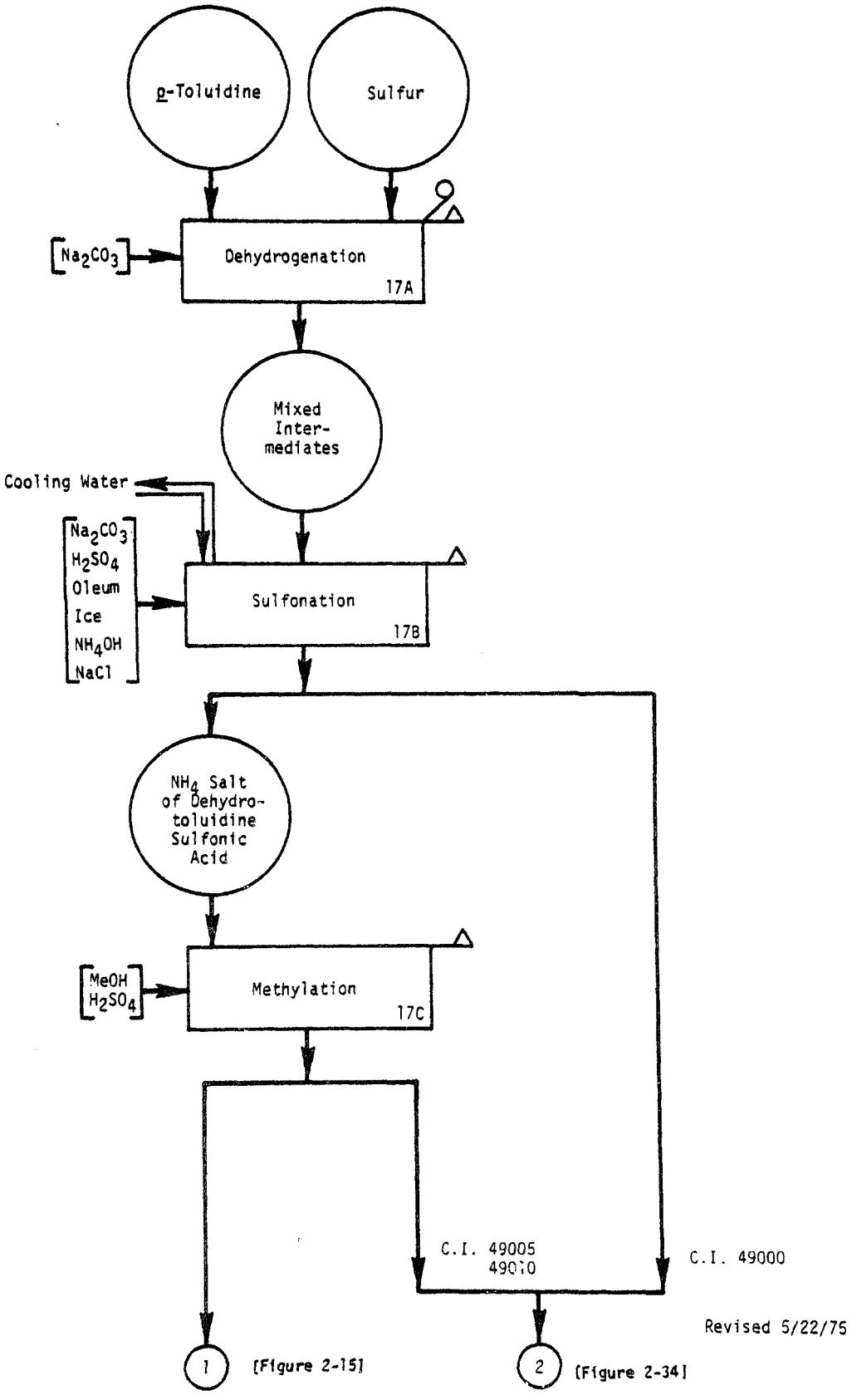

FIGURE 2-14. FLOW CHART FOR THE PRODUCTION OF SELECTED THIAZOLE DYES AND PIGMENTS FROM VARIOUS INTERMEDIATES

THIAZOLE DYES AND PIGMENTS

1. Function - This class of dyes is represented by only three products, C.I. No. 49000, 49005, and 49010. The two principal starting materials are p-toluidine and sulfur. Depending on the specific color being made, the number of processing steps ranges from two to four. In respect to the method of manufacture, these dyes are closely related to the sulfur dyes (cf. Process No. 21). The processing equipment for the primary reaction between the two principal starting materials is a stirred iron vessel with a jacket to permit controlled heating at temperatures in the range of 150-250°C. The necessary sulfonation is carried out in an iron vessel fitted with a stirrer and a steam coil. Esterifications with methanol would require a glass-lined pressure vessel which could operate at 500 psi.

2. Input Materials - Table 1 shows the amounts of starting materials needed to make 100 pounds of C.I. 49000.

TABLE 1. RAW MATERIALS NEEDED FOR 100 POUNDS OF C.I. 49000

Component	Amount, pounds
p-toluidine	82.3
sulfur	53.8
sodium carbonate	0.8
sulfuric acid	115
66 percent oleum	77
20 percent aqueous ammonia	19.2
ice	192
water	500

The reaction would also produce 31.3 pound of dehydro-p-toluidine sulfonic acid as the ammonium salt, which on methylation would yield C.I. 49005.

3. Operating Parameters - The fusion of sulfur with p-toluidine is carried out at 180 to 220°C over a period of 13 hours under atmospheric pressure. Sulfonation of the cooled, solidified melt from the fusion reaction is done at 20 to 30° with good cooling.

4. Utilities - A hot liquid heat transfer system is necessary, together with electricity, refrigeration, steam, and water in unknown amounts.

5. Waste Streams - The principal emission problem arises from the evolution of hydrogen sulfide in the fusion reaction. In a well-run plant, this toxic gas would be absorbed in sodium hydroxide for use elsewhere in the manufacture of dyes as a reducing agent. Other waste streams would be dilute sulfuric acid and an ammoniacal brine contaminated with small amounts of organic materials, some of which would be highly colored.

6. EPA Source Classification Code -

7. References - Fierz-David, H. E. and Blangey, L., Fundamental Processes of Dye Chemistry, Translated from the Fifth Austrian Edition by P. W. Vittum, Interscience Publishers, Inc., New York (1949), pp 332-335.

PROCESS NO. 18: FORMATION OF PIGMENTS FROM SELECTED DYES

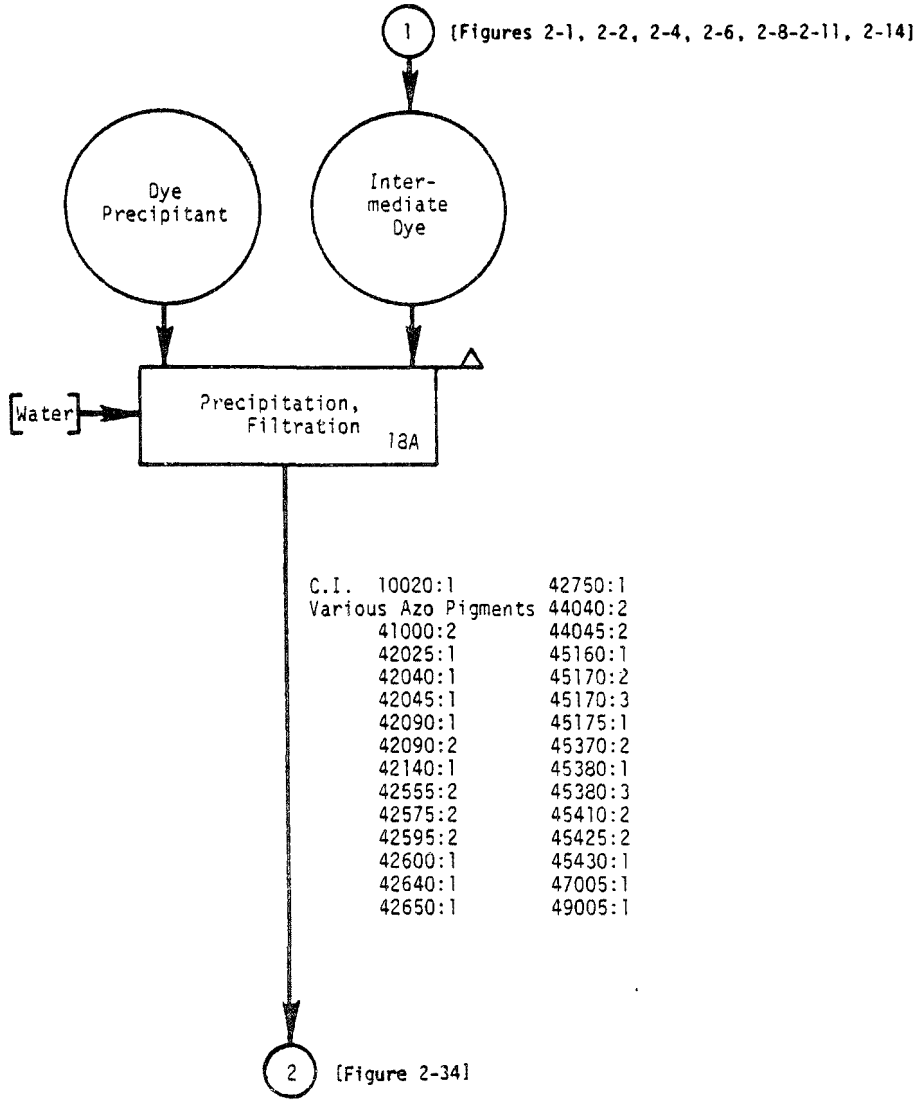

Revised 5/20/75

FIGURE 2-15. FLOW CHART FOR THE PRODUCTION OF PIGMENTS FROM SELECTED DYES

FORMATION OF PIGMENTS FROM SELECTED DYES

1. Function - A variety of dyes are too easily soluble in water and/or organic solvents to function satisfactorily as pigments. Many such dyes can be combined in simple fashion with another chemical to make a satisfactory pigment having the requisite low solubility characteristics. The process step of combining the dye and a dye precipitant is easily carried out in a large vat made of steel, with good stirring to insure completion of the reaction involved.

2. Input Materials - The starting materials, other than the dye, used to make pigments from dyes are selected from the list in Table 1.

TABLE 1. STARTING MATERIALS WHICH COMBINE WITH DYES TO YIELD PIGMENTS

alumina
aluminum sulfate
barium chloride
calcium chloride
ferrous sulfate
sodium chloride
manganese chloride
strontium chloride
resin
quebracho extract
phosphomolybdic acid
phosphotungstic acid
potassium antimonyl tartrate

Neither alumina nor resin combine chemically with the selected dye to form an insoluble complex as do the other substances. These two materials function as adsorbtive agents.

3. Operating Parameters - The reacting solutions are generally heated to a temperature between 50 and 75°, combined at a prescribed rate and the product slurry cooled to obtain the desired crystalline form of the product.

4. Utilities - Electricity, steam, and water are required in unknown amounts.

5. Waste Streams - The waste products are all brines containing organic chemicals, some of which are highly colored. The brines may also contain residual amounts of metal ions when metal salts are used as precipitants. It should be noted that barium ion is very toxic.

6. EPA Source Classification Code -

7. References - Pigment Handbook, Edited by T. C. Patton, John Wiley & Sons (1973), "Pigment Green B, I-D-a" (C. G. Inman), pp 435-438; "Helio Bordeaux BL, I-D-c-6" (G.G. Kositzke), pp 487-489; "Persian Orange Lake, I-D-c-7" (M. J. Dunn), pp 491-492;"Red Lake C, I-D-c-8" (R. Benemelis, pp 493-496; "Lithol Red, I-D-c-9-i" (T.E. Ludwig), pp 497-504; "Rubines, I-D-c-9-ii" (T.E. Ludwig), pp 505-514; "Rubine G Pigment, I-D-c-9-iii, pp 515-518; "Permanent Red 2B, I-D-c-10-i, pp 519-524; "BON Maroon, I-D-c-10-ii" (C.H. Bernhard), pp 525-529;

"Pigment Scarlet 3B Lake, I-D-c-11", (T.A. Langstroth); "Scarlet 2R Lake, I-D-c-12" (T.C. Patton); "Basic Dye Pigments, Fugitive, I-D-f-1", (J. B. Arnold), pp 599-604; "Basic Dye Pigments, Permanent, I-D-f-2" (V. Oliver), pp 605-616, "Peacock Blue Lake, I-D-h" (T. C. Patton), pp 625-627.

AZINE DYES (C.I. 50204, 50240, 50400, and 50415)

1. Function - The manufacture of the azine dyes depends on the oxidation of aniline and selected arylamines under specific conditions. The reaction conditions and components are somewhat different from those used in Process No. 6 for the manufacture of triarylmethane dyes from arylamines by oxidative reactions. The literature available does not tell whether or not simple iron vessels can be used for the fusion reactions used to make these dyes. The hydrochloric acid salts of amines would likely corrode iron at the elevated temperatures used and make necessary the use of glass-lined reactors.

2. Input Materials - The matrix below (Exhibit 1) shows the chemicals needed to make the dyes in this category:

EXHIBIT 1. COMPONENTS NEEDED TO MAKE SELECTED AZINE DYES

Color Index Components	50204	50240	50400	50415
p-phenyazoaniline	x		x	
aniline	x	x	x	x
toluene-2,5-diamine		x		
o-toluidine		x		
hydrogen chloride	x	x	x	x
sodium dichromate		x		
nitrobenzene	x		x	x
ferrous chloride	x		x	
iron (powder)		x		

No information is available on the amounts of these materials needed.

3. Operating Parameters - The first step in making C.I. 50420 requires diazotization of o-toluidine, a reaction which must be carried out at 0 to 5°. The intermediate diazo compound is allowed to couple with toluene-2,5-diamine. The operating parameters for the remaining steps in the process are not available. The oxidation of aniline to make C.I. 50415 is accomplished by fusing aniline with aniline hydrochloride and nitrobenzene in the presence of ferric chloride at 160 to 180°C. p-Phenylazoaniline is fused with aniline hydrochloride in the presence of ferrous chloride and nitrobenzene to give C.I. 50204 or 50400. The details of the procedure which determine the exact dye obtained are not available from published literature.

4. Utilities - Electricity, steam, and water are needed, but the amounts required are not known.

5. Waste Streams - The aqueous effluents from washing the dyes would contain chloride, iron, and chromium ions, as well as small amounts of organic materials, many of which would be highly colored. In a well-run plant the metal ions would be precipitated and allowed to settle in a pond as a sludge.

6. EPA Source Classification Code -

7. References - The Chemistry of Synthetic Dyes and Pigments, Edited by H.A. Lubs, Reinhold Publishing Co. (1955), Chapter 5, "Miscellaneous Dyes" (S.E. Krahler) pp 239, 241-244; Venkataraman, K., The Chemistry of Synthetic Dyes, Academic Press, New York (1952), Volume II, pp 766-767, 773-776.

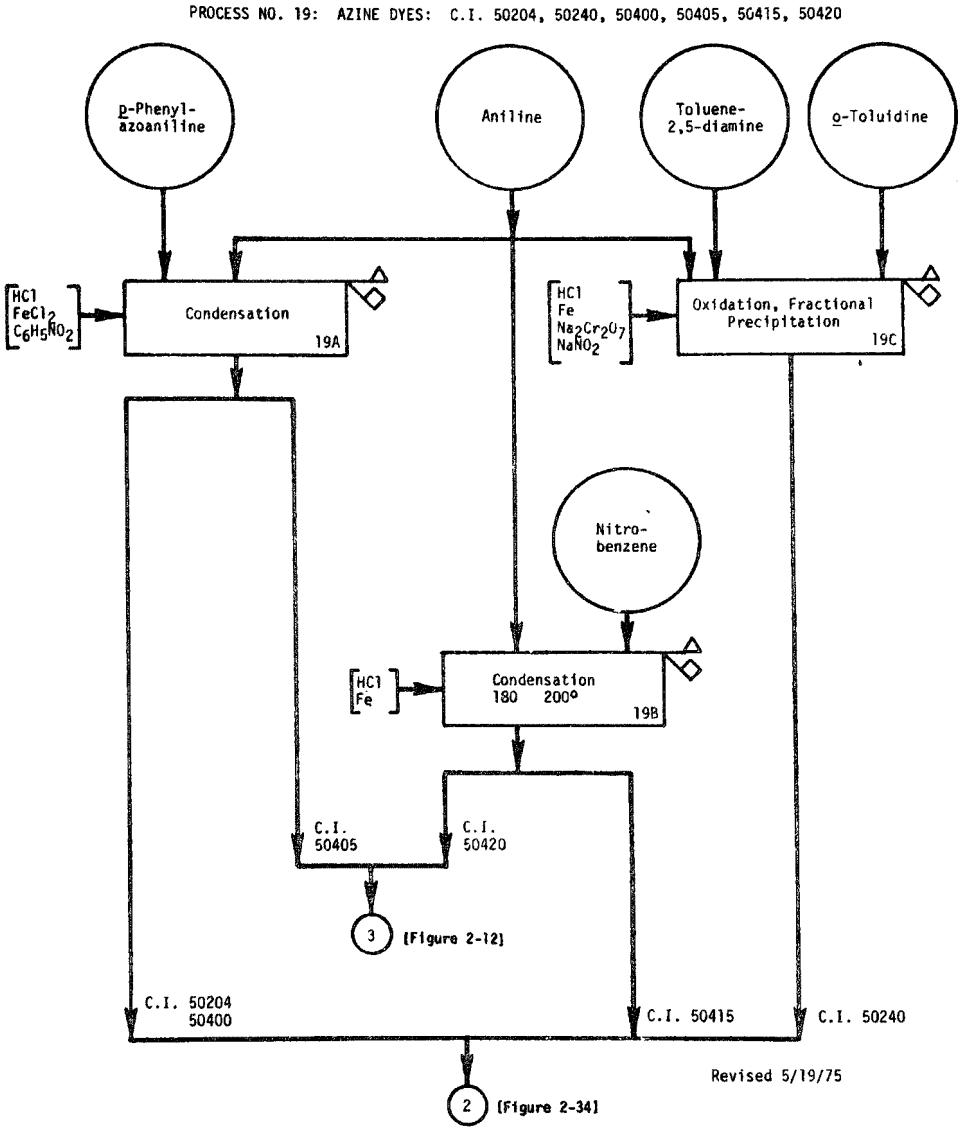

FIGURE 2-16. FLOW CHART FOR THE PRODUCTION OF SELECTED AZINE DYES FROM VARIOUS INTERMEDIATES

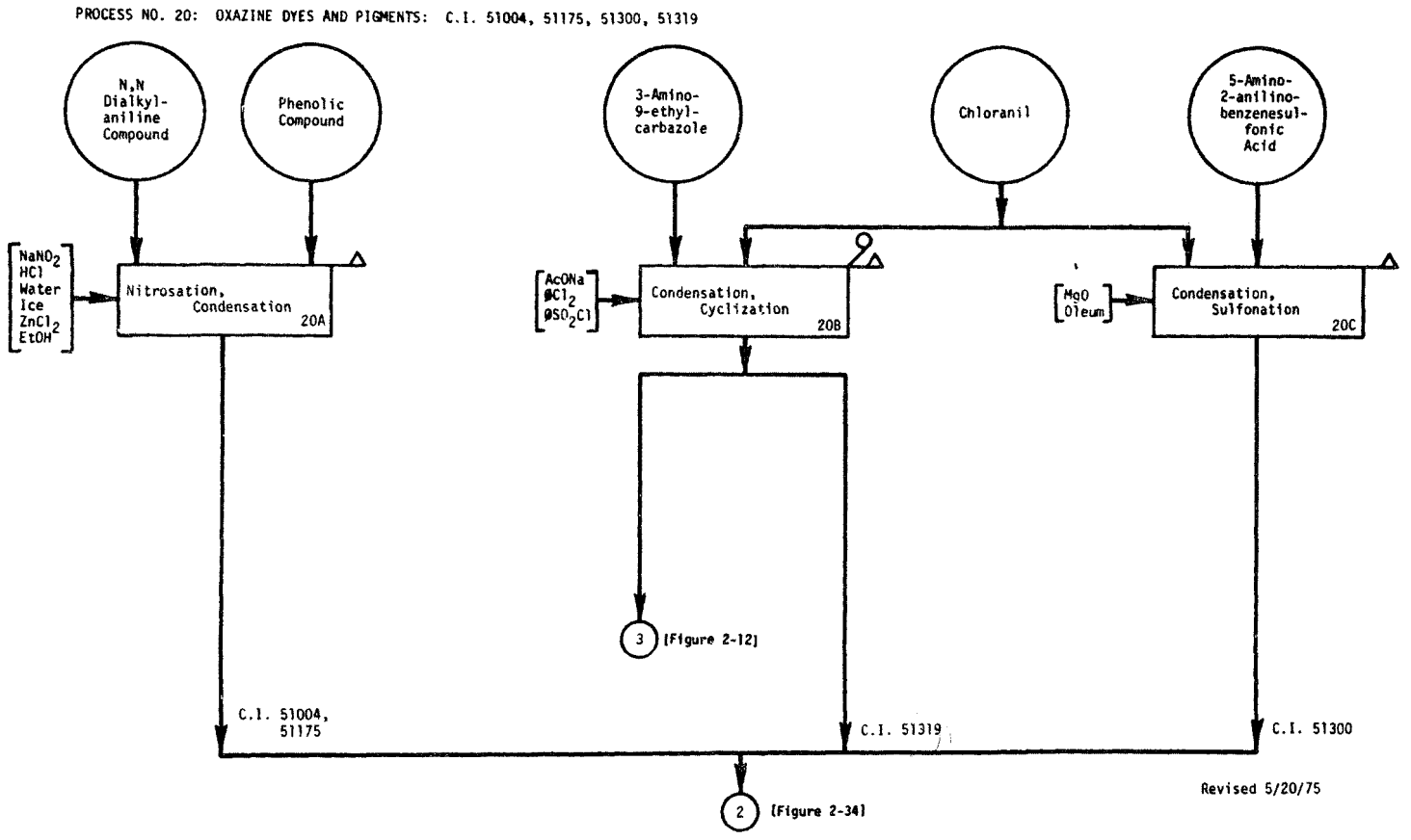

FIGURE 2-17. FLOW CHART FOR THE PRODUCTION OF SELECTED OXAZINE DYES AND PIGMENTS FROM VARIOUS INTERMEDIATES

OXAZINE DYES AND PIGMENTS

1. Function - These dyes all involve the condensation of a substituted aniline compound with a substituted phenolic compound (or a phenol ether), followed by an oxidative reaction which brings about the formation of an oxazine ring system. The chemical structure of these dyes is conceptually related to those for the azine (cf. Process No. 19), and thiazine dyes (cf Process No. 21). Stirred batch reactors with a glass lining are necessary for most of the reactions involved in making these products.

2. Input Materials - The starting materials for the several products are shown in the matrix below (Exhibit 1).

EXHIBIT 1. STARTING MATERIALS FOR OXAZINE DYES AND AN OXAZINE PIGMENT (C.I. 51004, 51175, 51300 and 51319)

Components	51004	51175	51300	51319
N,N-diethyl anisidine (or phenetidine)	x			
sodium nitrite	x	x		
hydrochloric acid	x	x		
ice	x	x		
m-diethylaminophenol	x			
water	x	x	x	
ethanol	x			
zinc chloride		x		
5-amino-2-anilino-benzenesulfonic acid			x	
magnesium oxide			x	
2-naphthol		x		
N,N-dimethylaniline		x		
3-amino-9-ethylcarbazole		x		x
chloranil	x	x	x	x
sodium acetate		x		x
magnesium oxide	x			
oleum	x			
benzenesulfonyl chloride		x		x
o-dichlorobenzene			x	x

3. Operating Parameters - Information on operating parameters could be found only for C.I. 51319. To make this pigment, chloranil is condensed with 3-amino-9-ethylcarbazole in o-dichlorobenzene as the reaction medium, using anhydrous sodium acetate as catalyst. The reaction requires 7 hours at 60 to 115°C. The condensation product is cyclized to the pigment with benzenesulfonyl chloride at 180°C. The crude pigment is washed and filtered.

4. Utilities - Electricity, steam, and water are required, but the amounts needed are not known.

5. Waste Streams - Liquid wastes result from the manufacture of all these products. These wastes are brines containing small amounts of organic materials, some of which are highly colored. In addition, the wash liquors from making C.I. 51319 contain significant amounts of benzenesulfonic acid. Hydrogen chloride is also evolved in the manufacture of this pigment, and it is usually scrubbed out from the reactor effluent with water. The use of oleum in making C.I. 51300 leads to a waste stream containing sulfur trioxide which must be controlled.

6. EPA Source Classification Code -

7. References - Venkataraman, K., The Chemistry of Synthetic Dyes, Academic Press, New York (1952), Volume II, pp 781, 786-788.

PROCESS NO. 21: THIAZINE DYE: C.I. 52015

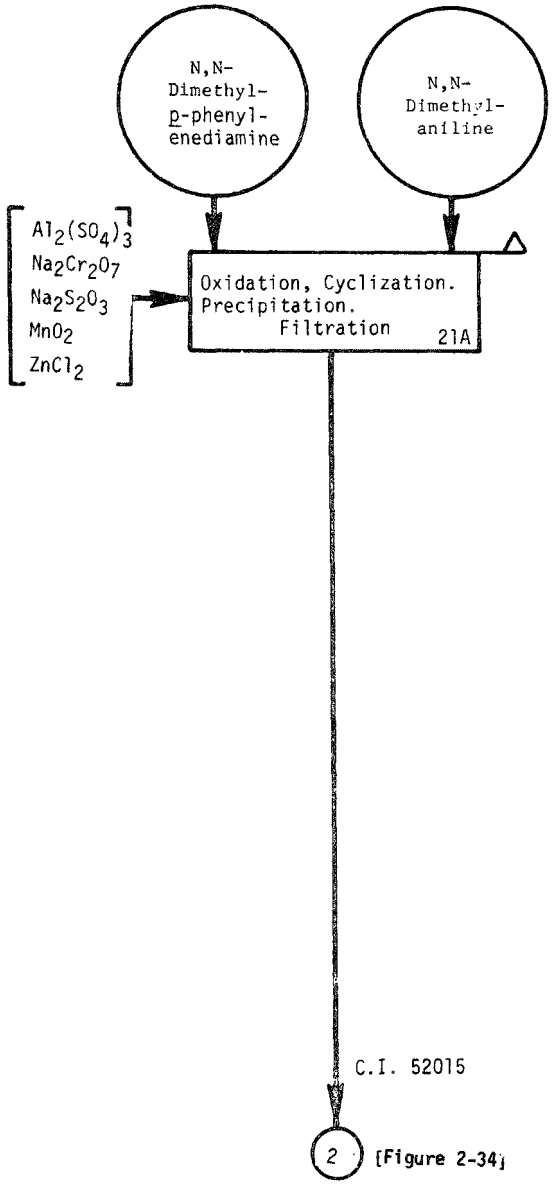

Revised 5/20/75

FIGURE 2-18. FLOW CHART FOR THE PRODUCTION OF A THIAZINE DYE FROM VARIOUS INTERMEDIATES

A THIAZINE DYE (C.I. 52015)

1. Function - The chemical structure of this dye is conceptually related to the structures for azine dyes (Process No. 20) and oxazine dyes and pigments (Process No. 19). The use of hydrochloric acid and zinc chloride requires that the reactor used be glass-lined.

2. Input Materials - The following chemicals are required to make 125 pounds of C.I. 52015, which contains 20 percent water (i.e., 100 pounds of dye):

water	505	gallons
50 percent zinc chloride	657	pounds
sodium chloride	1250	"
sodium nitrite	16	"
manganese dioxide	82	"
sulfuric acid	230	"
aluminum sulfate	125	"
sulfuric acid	230	"
concentrated hydrochloric acid	88	"
sodium dichromate	188	"
dimethylaniline	66	"
p-aminodimethylaniline	88	"
62 percent nitric acid	66	"
sodium thiosulfate	173	"

3. Operating Parameters - The main reaction involved in making this dye takes place smoothly at 70 to 85°C. Only small amounts of the dye are made in a single batch because rapid heating of the reaction mixture is necessary during processing.

4. Utilities - Electricity, steam, and water are needed, but the amounts required are not known.

5. Waste Streams - All the waste streams are brines containing also manganese, chromium, zinc, and aluminum ions. The thiosulfate used is partly converted to dithionate in the waste effluents.

6. EPA Source Classification Code -

7. References - Fierz-David, H. E. and Blangey, L., Fundamental Processes of Dye Chemistry, Translated from the Fifth Austrian Edition by P. W. Vittum, Interscience Publishers, Inc., New York (1949), pp 311-314; The Chemistry of Synthetic Dyes and Pigments, Edited by H. A. Lubs, Reinhold Publishing Co. (1955), Chapter 5, "Miscellaneous Dyes" (S. E. Krahler), pp 266-268; Venkataraman, K., The Chemistry of Synthetic Dyes, Academic Press, New York, (1952), Volume II, pp 791-794.

PROCESS NO. 22: SULFUR DYES: C.I. 53000 - 53830, 69705

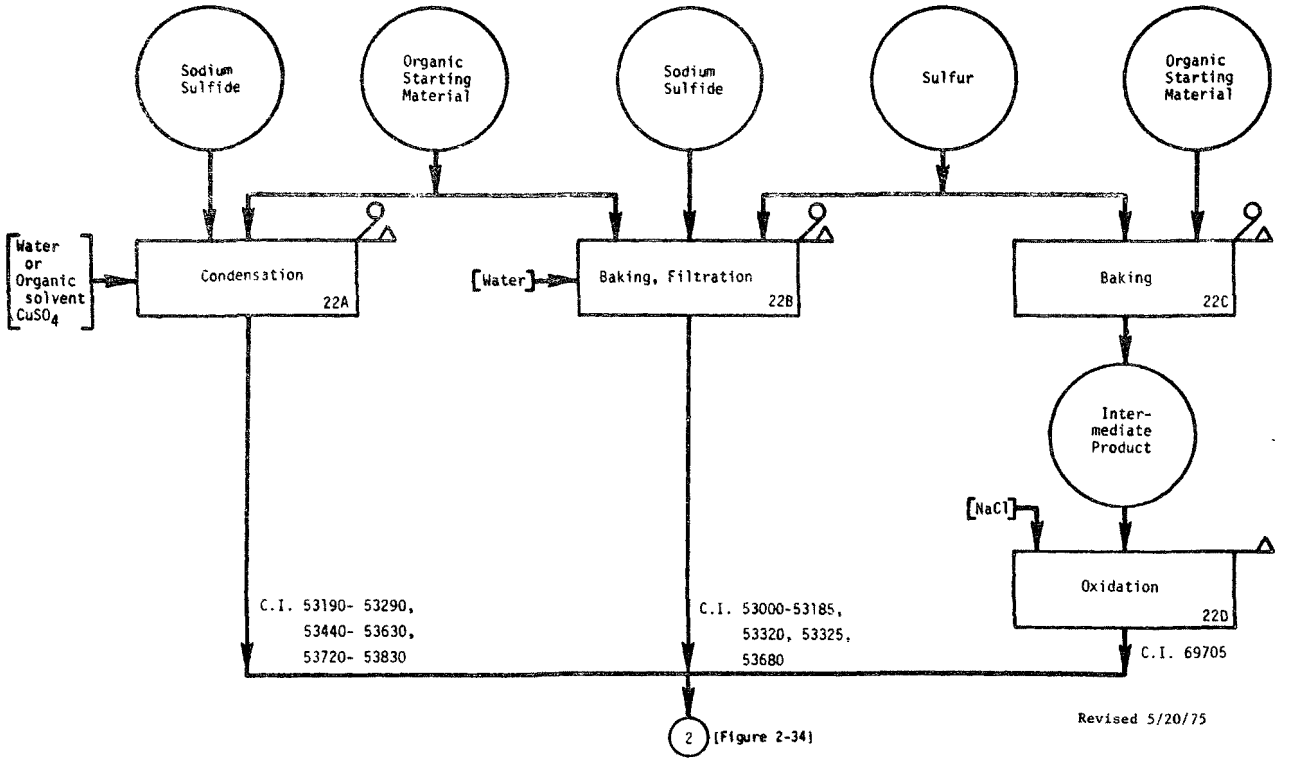

FIGURE 2-19. FLOW CHART FOR THE PRODUCTION OF SELECTED SULFUR DYES FROM VARIOUS INTERMEDIATES

SULFUR DYES (C.I. 53000 - 53830, and 69705)

1. Function - Some of the sulfur dyes share in common with the thiazole dyes (Process No. 17) the use of sulfur at high temperatures as an important processing step. Other sulfur dyes use either sodium sulfide in combination with sulfur, or sodium sulfide together with a solvent as the reagent material. Besides the variety of pure organic chemicals used as substrate materials, cellulose of one kind or another can be converted to a sulfur dye. If iron vessels are used for the reactors, they may be corroded rapidly in the case of some dyes. Glass-lined vessels are preferred in these few instances. Good agitation is necessary for making all the sulfur dyes.

2. Input Materials - Besides cellulose (for C.I. 53000) and 53001, twenty-eight organic chemical species are used to make twenty-seven specific dyes. The chemicals employed are listed in Table 1.

   Many of the organic chemicals in Table 1 are used alone. Some are used either alone or in combination with one or more other compounds, and some are used only in combinations. The sulfurizing reagents are: (1) sulfur alone, (2) sodium sulfide and water or an organic solvent or (3) sodium sulfide and sulfur in combination. Copper sulfate is occasionally also a component of the reaction mixture.

3. Operating Parameters - The mixture of starting materials is heated for varying periods of time (10 to 48 hours). When a solvent is not employed, the reaction temperature ranges from 95° to 350°C. With a solvent, temperatures are generally in the range of 84 to 124°C, with the temperature usually being that at which the solution boils. Reaction vessels vary in size from 300 to 2000 gallons.

4. Utilities - In addition to a hot liquid heat transfer system, electricity, steam, and water are needed in unknown amounts.

5. Waste Streams - The sulfurization step generates hydrogen sulfide, which must be scrubbed from the reactor effluent. The resulting sodium sulfide can be recycled. Sodium thiosulfate can be recovered from the manufacture of sulfur dyes with aqueous sodium sulfide as the sulfurizing reagent. Recovery of this valuable byproduct is an important factor in the economics of manufacturing several sulfur dyes. The aqueous effluents from making sulfur dyes are brines containing inorganic sulfur compounds and small amounts of organic chemicals, some of which may be highly colored.

6. EPA Source Classification Code -

7. References - Fierz-David, H. E. and Blangey, L., Fundamental Processes of Dye Chemistry, Translated from the Fifth Austrian Edition by P. W. Vittum, Interscience Publishers, Inc., New York (1949), pp 337-338; The Chemistry of Synthetic Dyes and Pigments, Edited by H. A. Lubs, Reinhold Publishing Co., (1955), Chapter 6, "Sulfur Dyes" (N. M. Bigelow and O. Stallman), pp 302-334; Venkataraman, K., The Chemistry of Synthetic Dyes, Academic Press, New York, (1952), Volume II, pp 1059-1109.

Table 1. ORGANIC CHEMICALS NEEDED FOR MAKING SULFUR DYES

Intermediate	C.I. Number
2,'4'-dinitroacetanilide	53010
phthalic anhydride	53010
5'-amino-o-formotoluidide	53040
aniline	53040
toluene-2,4- diamine	53050, 53055, 53090
N,N'-p-phenylenebisformamide	53090
N,N'-2,4-tolylylenebisformamide	53120
benzidine	53160
2-(p-aminophenyl)-6-methylbenzothiazole	53160
2,4-dinitrophenol	53185, 53190, 53195, 53196
p-aminophenol	53190
picric acid (or picramic acid)	53195, 53196, 53205
p-anilinophenol	53228
p-(2,4-dinitroanilino)phenol	53235, 53246
o-(2,4-dinitroanilino)phenol	53246
phenol	53290
p-2-naphthylaminophenol	53290
4,4'-iminodiphenol	53290
decacyclene	53320
trinitrodecacyclene	53325
p-(4-amino-m-toluidino)phenol	53340
p-(p-dimethylaminoanilino)phenol	53430
N-(p-anilinophenyl)-p-quinone imine	53450
8-anilino-5-(p-hydroxyanilino)-1-naphthalenesulfonic acid	53570, 53571
p-(3-carbazolylamino)phenol	53630
3,6-diamino-2,7-dimethylacridan	53680
8-amino-7-methyl-2-phenazinol	53720
1,2,4-trichloro-7-methyl-3 H-isophenothiazin-3-one	53830
sulfur	various
sodium sulfide	various
sodium chloride	various
ethylene glycol	53228
butyl alcohol	53290, 53630
sodium hydroxide	53050, 53055, 53160
cyclohexanol	53228
ethylene glycol monomethyl ether	53228
hydrochloric acid	53430
sulfuric acid	53320, 53325
Glycerol	53830
2-(chloromethyl) anthraquinone	69705
sodium hypochlorite	69705

Figure 2-20. Flow chart for the production of miscellaneous vat dyes and pigments based on anthraquinone and pyrene

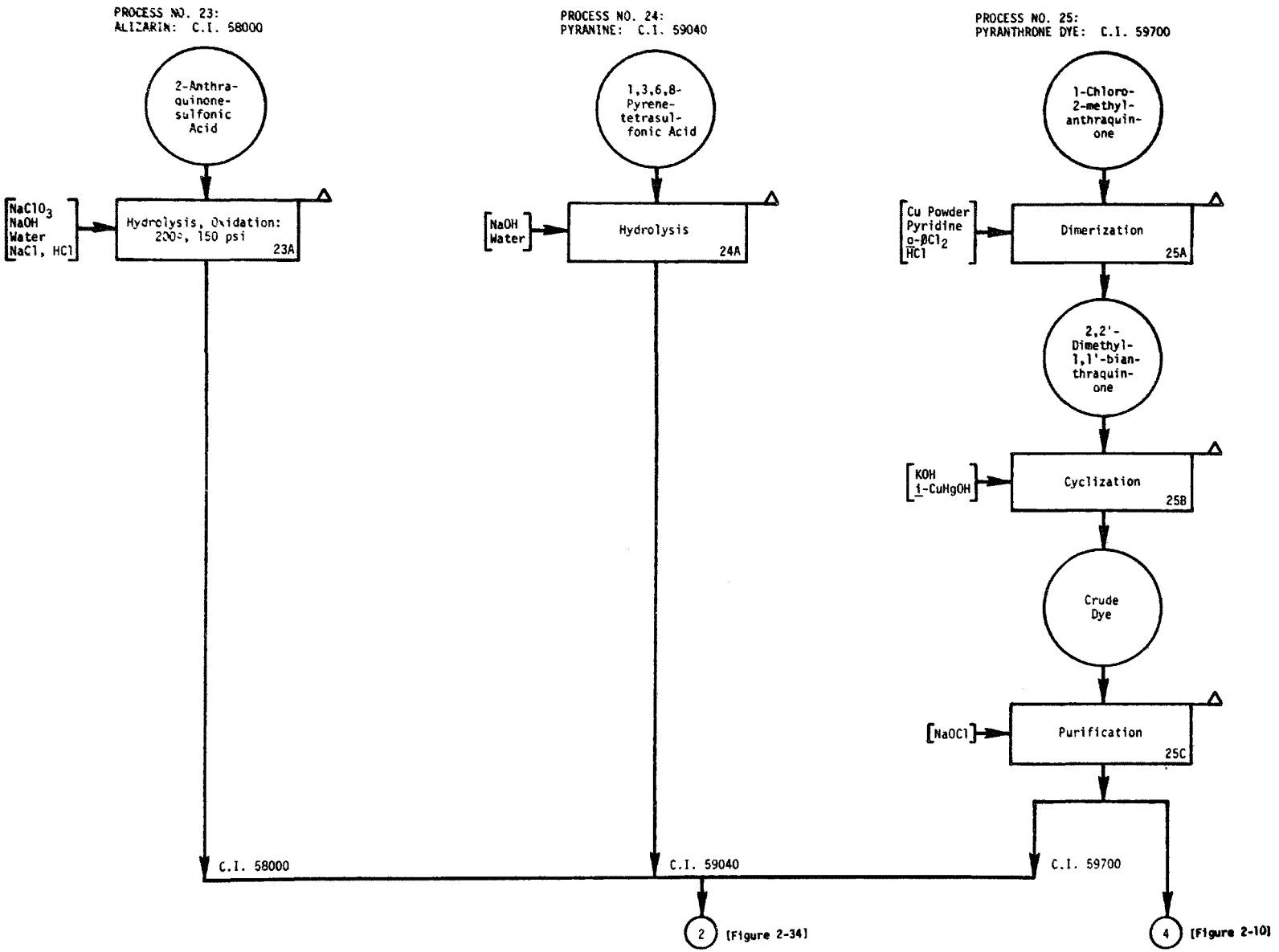

Revised 5/22/75

FIGURE 2-20. FLOW CHART FOR THE PRODUCTION OF MISCELLANEOUS VAT DYES AND PIGMENTS BASED ON ANTHRAQUINONE AND PYRENE

ALIZARIN (C. I. 58000)

1. Function - Alizarin is itself an important vat dye, and also serves as an intermediate for making other dyes. Its manufacture depends on a combination of hydrolysis and a controlled oxidation of 2-anthraquinone sulfonic acid. A stirred autoclave capable of operating at 200° and 150 psi is required for carrying out the reaction. The reaction mixture is highly corrosive and requires the use of a nickel-lined vessel.

2. Input Materials - The materials required to make 100 pounds of alizarin are shown in Table 1.

TABLE 1. MATERIALS NEEDED TO MAKE 100 POUNDS OF ALIZARIN

Compound	Amount, in pounds
Sodium 2-anthraquinonesulfonic Acid	133
Sodium Hydroxide	382
Sodium Chlorate	40
Water	115 (Gallons)
50 Percent Sulfuric Acid	As Required

3. Operating Parameters - The reaction mixture is heated at 185°C for 48 to 72 hours under an autogeneous gauge pressure of 75 to 90 psi. Batches of alizarin as large as 2500 kg have been made in a single operation. It is estimated that a 10,000 gallon autoclave would be used for such a large batch.

4. Utilities - Electricity, steam, water and a hot liquid heat transfer system are needed. The required amounts of utilities are not known.

5. Waste Streams - All the waste streams from the manufacture of alizarin are brines containing sodium sulfite and small amounts of organic materials, some of which are highly colored.

6. EPA Source Classification Code -

7. References - Fierz-David, H. E., and Blangey, L., Fundamental Processes of Dye Chemistry, Translated from the Fifth Austrian Edition by P.W. Vittum, Interscience Publishers, Inc., New York (1949), pp 314-17.

PYRANINE (C.I. 59040)

1. Function - The manufacture of this single dye depends on the conversion of one of the four sulfonic acid groups in pyrene-1,3,6,8-tetrasulfonic groups to an hydroxyl group by simple hydrolysis. Although this type of reaction alone is not used to make other dyes, it is used to make certain dye intermediates and hydrolysis of the sulfonic acid group in sodium anthraquinone-2-sulfonate is one of the reactions involved in the manufacture of alizarin. A version of this reaction is used today to make resorcinol from benzene-1,3-disulfonic acid. An ordinary iron vessel fitted with a reflux condenser should serve admirably for the production of this dye.

2. Input Materials - The only input materials needed are pyrene-1,3,6,8-tetrasulfonic acid and 15-20 percent sodium hydroxide solution. The process requires 144 pounds of sodium 1,3,6,8-pyrenetetrasulfonate, 82 pounds of sodium hydroxide and 50 gallons of water to make 100 pounds of the dye. The reflux time of 18 hours given in the literature is probably longer than is really necessary.

3. Operating Parameters - The process operates under atmospheric pressure at the boiling point of 15-20 percent caustic soda.

4. Utilities - Electricity, steam and water are needed in unknown quantities.

5. Waste Streams - The only waste stream is an aqueous effluent containing sodium sulfite. In a well run plant, this material might be freed of the organic materials contained in it and used in other processes for its reducing power.

6. EPA Source Classification Code -

7. References - Tietze, E., and Bayer, O., Annalen 540, 205 (1939).

PYRANTHRONE (C.I. 59700)

1. Function - This dye can be made from either 1-chloro-2-methylanthraquinone or pyrene as the principal organic starting material. The availability of pyrene may have greatly diminished in recent years owing to the decline in the volume of chemicals recovered from coal tar distillates. The corrosive nature of the chemicals involved in the several process steps indicates that stirred vessels with a glass-lining would be required.

2. Input Materials - The materials required to make 100 pounds of dye contained in 110 pounds of product are as follows:

1-chloro-2-methylanthraquinone	142 pounds
o-dichlorobenzene	407 "
copper powder	77 "
pyridine	46 "
sodium carbonate	68 "
sodium hydroxide	59 "
isobutyl alcohol	417 "
hydrochloric acid (dilute)	minor unknown amounts
sodium chlorate	minor unknown amounts

Nearly all of the o-dichlorobenzene would be recovered.

3. Operating Parameters - The dimerization of the 1-chloro-2-methylanthraquinone takes place at 150-160°C in 6 hours. Cyclization to the dye requires 3 hours at the same temperature. No information is available regarding the size of equipment used.

4. Utilities - No information is available about the utilities required.

5. Waste Streams - The principal waste streams from the manufacture of this dye would be brines containing small amounts of organic chemicals.

6. EPA Source Classification Code -

7. References - Fierz-David, H. E. and Blangey, L., Fundamental Processes of Dye Chemistry, Translated from the Fifth Austrian Edition by P. W. Vittum, Interscience Publishers, Inc., New York (1949), p 223; The Chemistry of Synthetic Dyes and Pigments, Edited by H. A. Lubs, Reinhold Publishing Co. (1955), Chapter 7, "Anthraquinone Dyes and Intermediates", (M. A. Perkins), pp 450-453; Venkataraman, K., The Chemistry of Synthetic Dyes, Academic Press, New York (1952), Volume II, pp 951-952.

PROCESS NO. 26: BENZANTHRONE DYES: C.I. 59100, 59800, 59825, 59850, 71200

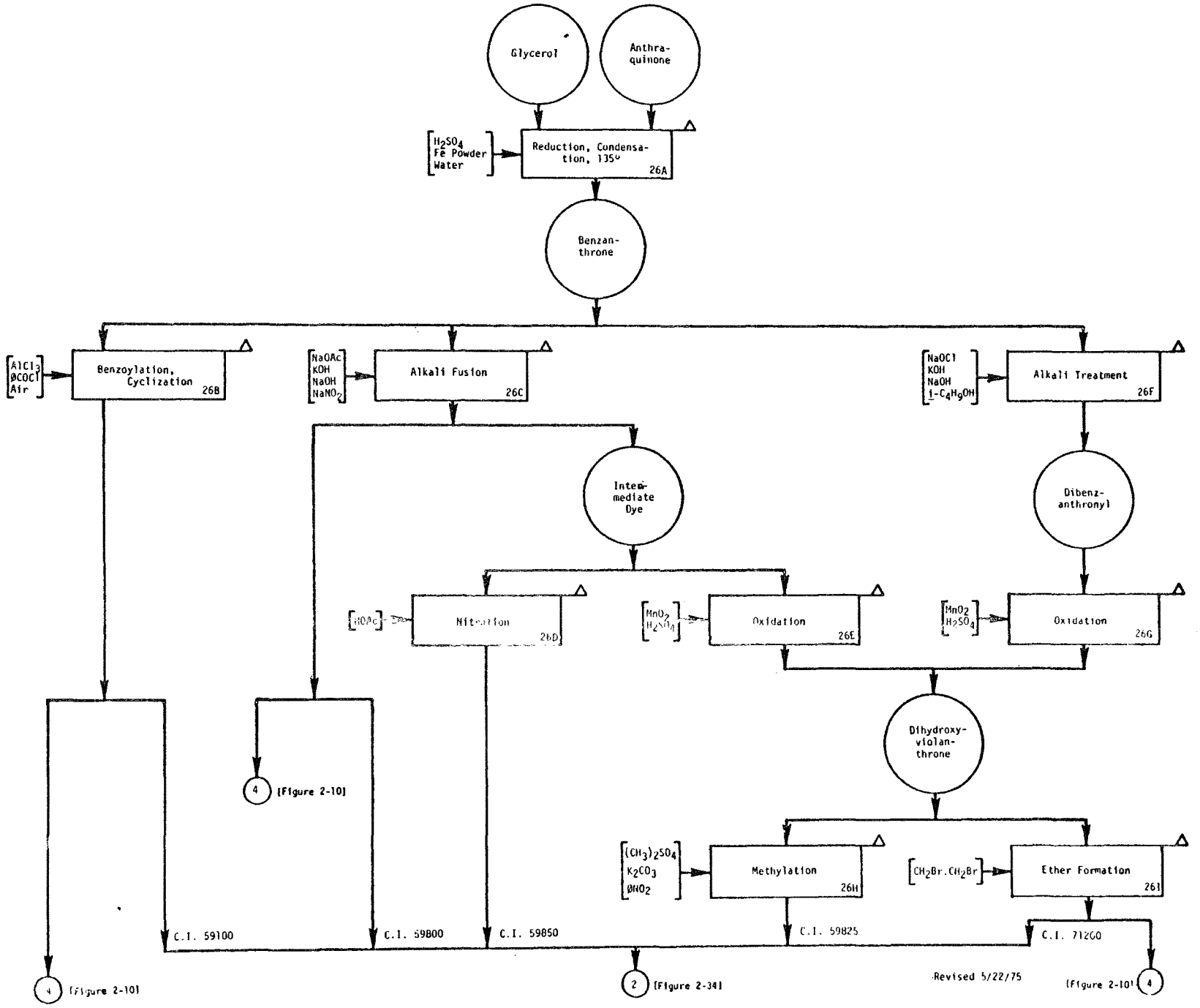

FIGURE 2-21. FLOW CHART FOR THE PRODUCTION OF BENZANTHRONE DYES FROM VARIOUS INTERMEDIATES

BENZANTHRONE DYES

1. Function - The manufacture of these dyes depends on the modification in several ways of a primary intermediate, benzanthrone. These dyes are closely related to the isoviolanthrone dyes made by Process No. 27, and all of them require benzanthrone as the principal organic raw material. The reaction to make this intermediate can be carried out in an iron vessel with good stirring. All the other reactions can also be done in similar iron vessels except for a nitration in acetic acid, which must be done in a stainless steel reactor.

2. Input Materials - To make 100 pounds of benzanthrone (25A) contained in 116 pounds of product, the following materials are required in the amounts shown in Table 1.

TABLE 1. MATERIALS NEEDED TO MAKE 100 POUNDS OF BENZANTHRONE

anthraquinone	104 pounds
glycerol	57.1
96% sulfuric acid	729
water	69.5
iron powder	79.1
caustic soda, wash water	small, unknown quantities

The product is purified by vacuum distillation. In the alkali fusion reaction (25C) for converting benzanthrone to C.I. 59800, the following materials are used, but the amounts necessary to make 100 pounds of dye are not specified in standard textbooks on dyes:

naphthalene (solvent)
benzanthrone
potassium hydroxide
sodium hydroxide
anhydrous sodium acetate

The alkali treatment of benzanthrone (25F, 25G and 25I) to make 100 pounds of C.I. 59825 requires the following materials in the amounts specified (Table 2):

TABLE 2. MATERIALS NEEDED TO CONVERT BENZANTHRONE TO 100 POUNDS OF C.I. 59825

benzanthrone	125	pounds
90% potassium hydroxide	312.5	"
anhydrous sodium acetate	37.5	"
isobutyl alcohol	240.6	"
water	413	gallons
12% sodium hypochlorite	50	pounds
water	158.5	gallons
96% sulfuric acid	2667	pounds
water	148	gallons
manganese dioxide	128	pounds
sodium bisulfite	amount unknown	
trichlorobenzene	1580	pounds
methyl p-toluenesulfonate	163.3	pounds
anhydrous potassium carbonate	120	pounds

Methyl sulfate is probably used today instead of methyl p-toluenesulfonate. The amounts of materials needed in the remaining reactions are not given in the standard texts on dyes. The other required input materials are shown in Table 3.

TABLE 3. OTHER RAW MATERIALS NEEDED TO MAKE SELECTED BENZANTHRONE DYES

Component	C.I. Number
aluminum chloride	59100
benzoyl chloride	59100
acetic acid	59850
nitric acid	59850
ethylene dibromide	71200

3. Operating Parameters - The reaction for converting anthraquinone and glycerol to benzanthrone (25A) begins at 125° and is highly exothermic. The temperature is maintained at 135° for an hour by cooling the kettle. The alkali fusion reaction (25B) of benzanthrone to make C.I. 59800 starts at 180° and the mixture is kept at 225 to 230° for 1 to 1.5 hours. The alkali treatment of benzanthrone (25F) to make dibenzanthronyl takes place at 112° for 1 to 4 hours. Oxidation of the dibenzanthronyl to the diketo compound (25G) takes place at 25-30° in 4 hours time. The methylation of the dihydroxy compound (25I) (obtained by reducing the diketo compound with boiling sodium bisulfite) requires 4 hours at 210°. Operating parameters for the other reactions are not readily accessible.

4. Utilities - A liquid heat transfer system is necessary for heating the alkali fusion vessel and the methylation reactor. Electricity, steam, and cooling water are also required. The amounts needed are not known.

5. Waste Streams - The treatment of benzanthrone with alkali results in the formation of hydrogen gas which can be flared in order to dispose of it safely. It is not considered to be a pollution problem. The solvents used in these processes (acetic acid, naphthalene, isobutyl alcohol, trichlorobenzene and nitrobenzene) are all too valuable to discard and are recovered to the full extent possible. Purification of dibenzanthrone inevitably leads to a distillation residue which constitutes a solid waste disposal problem. The iron used in making benzanthrone itself would probably end up as an oxide sludge. Liquid wastes are encountered in all the process steps involved in making these dyes. These wastes would be brines with excess alkali, manganese ion, or aluminum ion. They would also contain organic substances. Solutions containing manganese ion would be economically worth recovering for their manganese content if there was a sufficient quantity of them.

6. EPA Source Classification Code -

7. References - The Chemistry of Synthetic Dyes and Pigments, Edited by H. A. Lubs, Reinhold Publishing Co. (1955), Chapter 7, "Anthraquinone Dyes and Intermediates" (F. B. Stilmar and M. A. Perkins) pp 377-379, 382-385; Venkataraman, K., The Chemistry of Synthetic Dyes, Academic Press, New York (1952), Volume II, pp 958-971.

PROCESS NO. 27: ISOVIOLANTHRONE DYES: C.I. 60000, 60015

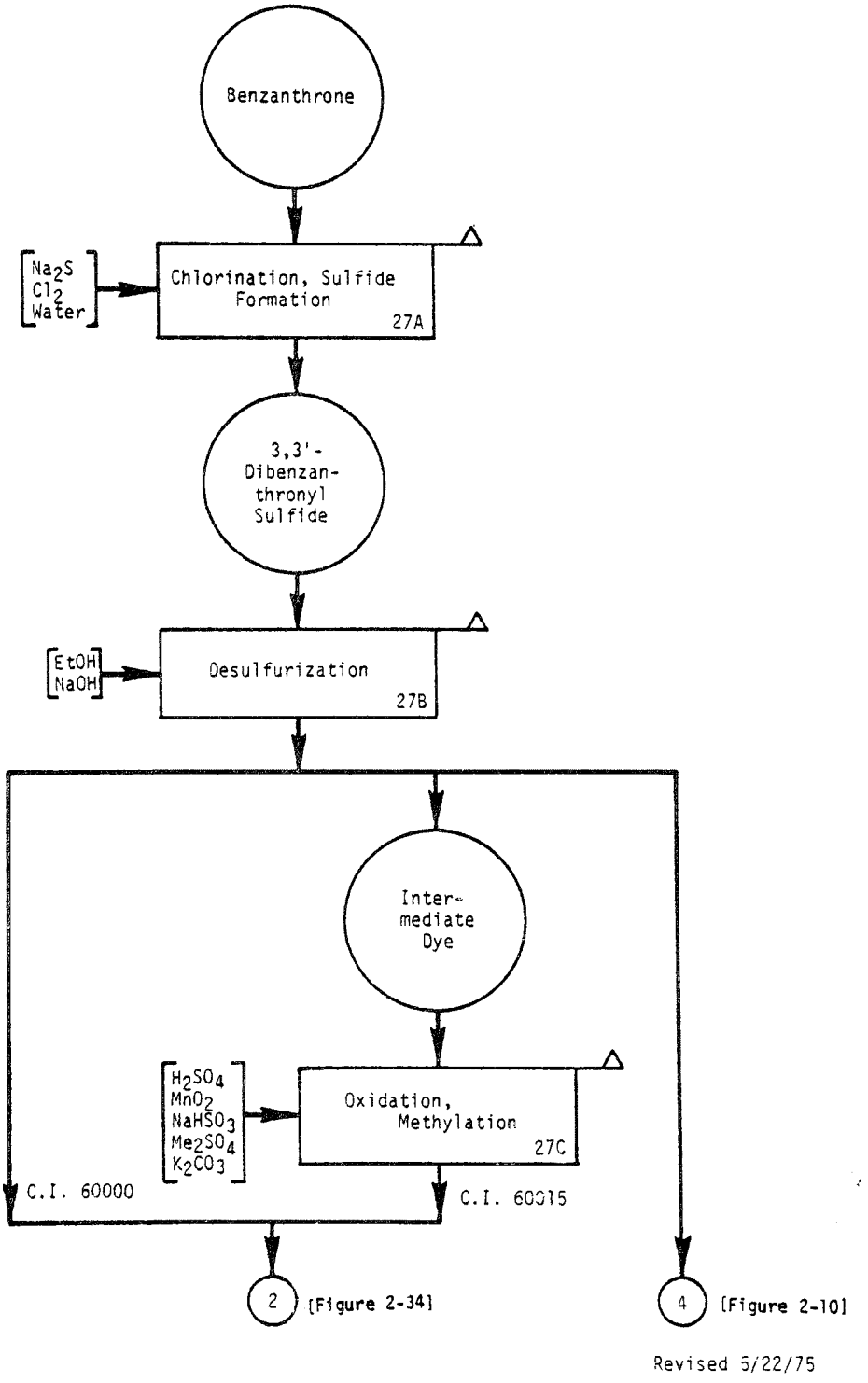

FIGURE 2-22. FLOW CHART FOR THE PRODUCTION OF ISOVIOLANTHRONE DYES FROM VARIOUS INTERMEDIATES

ISOVIOLANTHRONE DYES (C.I. 60000 and 60015)

1. Function - The isoviolanthrone dyes are closely related to the violanthrone products made by Process No. 26. Both classes of dyes have similar structures and depend on the benzanthrone as the principal organic chemical starting material. The equipment for carrying out the first process step (27A), chlorination of benzanthrone, requires equipment which resists corrosion by water, chlorine, and hydrochloric acid at 100°. Glass-lined vessels and glass pipe would be necessary for handling the reaction mixture. The two other process steps for making these dyes could probably be carried out in iron reactors fitted with efficient stirrers.

2. Input Materials - The raw materials for making these dyes are listed in Table 1.

TABLE 1. STARTING MATERIALS NEEDED TO MAKE ISOVIOLANTHRONE DYES, C.I. 60000 and 60015

Components	Color Index Number 60000	60015
benzanthrone	x	x
sodium sulfide	x	x
ethanol	x	x
sodium hydroxide	x	x
sulfuric acid		x
manganese dioxide		x
sodium bisulfite		x
methyl sulfate		x
potassium carbonate		x

No information could be found regarding the quantities of raw materials needed to make 100 pounds of the dyes.

3. Operating Parameters - 3-Bromobenzanthrone is converted to the dibenzanthronyl sulfide by heating it with sodium sulfide. On adding sodium hydroxide to the sulfide, it cyclizes to isoviolanthrone. No details of the operating parameters could be found.

4. Utilities - Electricity, steam, and cooling water are necessary utilities but the amounts required are not known.

5. Waste Streams - The chlorination of benzanthrone leads to a waste stream of of dilute hydrochloric acid which would be difficult to dispose of safely and economically. Formation of dibenzanthronyl sulfide results in a waste brine. The desulfurization of the sulfide would generate a waste stream of sodium sulfide which could be recycled. The oxidation and methylation of C.I. 60000 would generate a waste stream containing manganous sulfate which could perhaps be economically recovered for its manganese values. The manufacture of C.I. 60015 would also generate quantities of brines containing small quantities of organic compounds.

6. EPA Source Classification Code -

7. References - Venkataraman, K., The Chemistry of Synthetic Dyes, Academic Press, New York (1952), Volume II, pp 974-975.

PROCESS NO. 28: ANTHRAQUINONE DYES AND PIGMENTS (AMINOLYSES): C.I. AS SHOWN BELOW

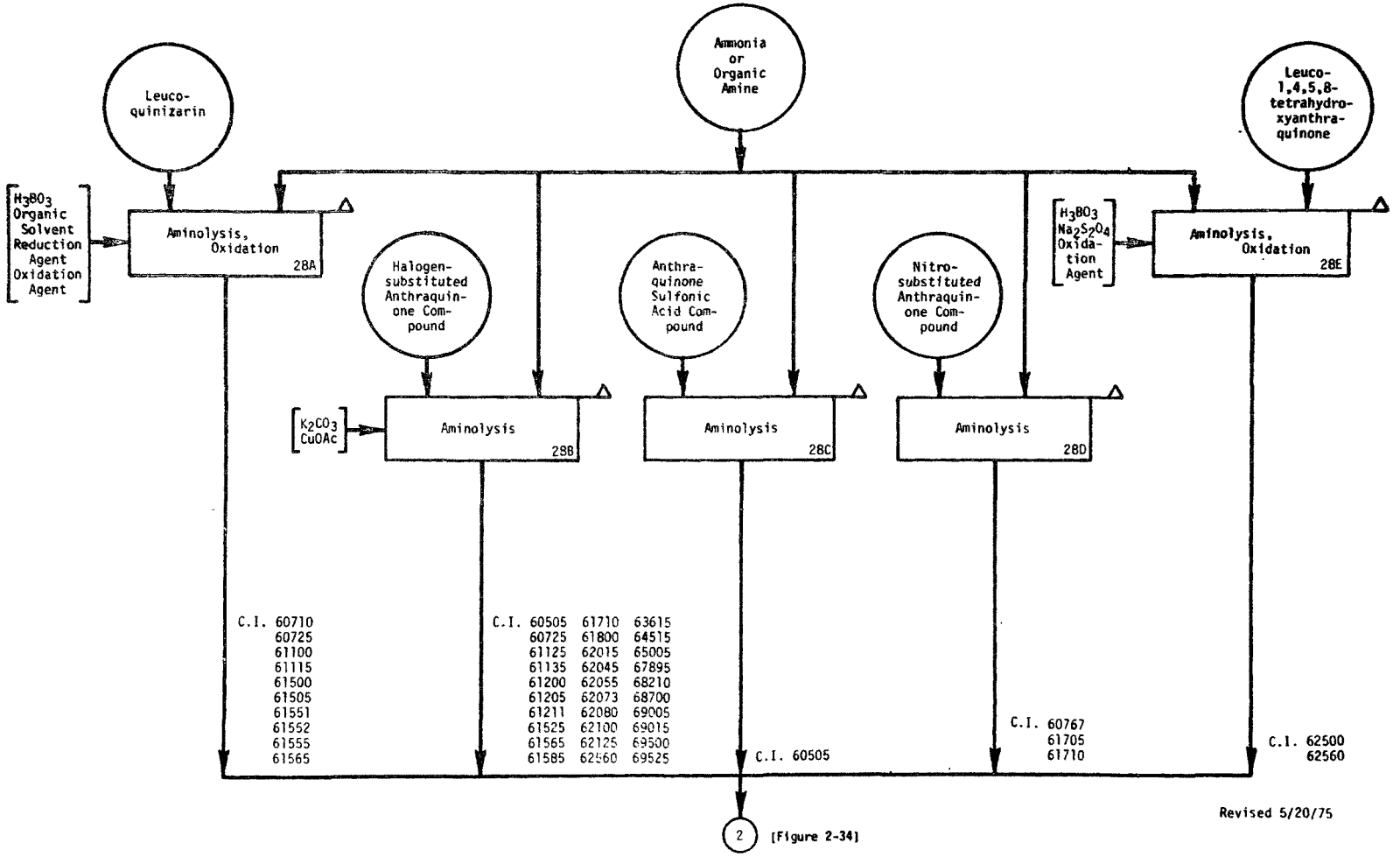

FIGURE 2-23. FLOW CHART FOR THE PRODUCTION OF ANTHRAQUINONE DYES AND PIGMENTS BY AMINOLYSIS OF VARIOUS INTERMEDIATES

ANTHRAQUINONE DYES AND PIGMENTS (AMINOLYSES)

1. Function - A number of dyes and pigments are made by the reaction of ammonia or an organic amine with an appropriately substituted anthraquinone compound. In the substrate anthraquinone compound, the incoming nitrogen moiety replaces an activated (1) hydroxyl, (2) halogen (3) sulfonic acid or (4) nitro group.

2. Input Materials - The required organic amines are selected from among approximately twenty (20) chemicals, of which about half are purchased outside the industry. The amines range in complexity from ammonia and methylamine to amino-substituted polycyclic compounds, including anthraquinone derivatives. The other part of the dye molecule always is an anthraquinone compound carrying the replaceable substituent usually (but not always) in the α-position. The substituent being replaced by nitrogen is usually a halogen (chlorine or bromine).

3. Operating Parameters - The displacement of halogen, hydroxyl, and nitro groups in the α-position of an anthraquinone compound generally proceeds under relatively milder conditions (40-125°C) than those needed for the displacement of a sulfonic acid group (125-150°C). The displacement of halogen is usually carried out in an aqueous medium, with an acid receptor present to neutralize the hydrogen halide which is formed. The acid receptor can be an excess of the organic amine or an alkali metal carbonate. Displacements of halogen are sometimes characterized by the use of copper acetate as catalyst. Displacements of hydroxyl are frequently catalyzed with boric acid and are done with the amine as the reaction medium. No information is available on the size of equipment used to make these dyes.

4. Utilities - Electricity, steam, and cooling water are the necessary utilities. No information is available on the amounts required.

5. Waste Streams - The waste streams from the process steps used to make these dyes are water and brines containing small amounts of organic chemicals. Manganese dioxide and other oxidizing agents lead to wastes containing heavy metals which are usually worthwhile recovering for the metal values.

6. EPA Source Classification Code -

7. References - Fierz-David, H. E. and Blangey, L., Fundamental Processes of Dye Chemistry, Translated from the Fifth Austrian Edition by P. W. Vittum, Interscience Publishers, Inc., New York (1949), pp 317-318; The Chemistry of Synthetic Dyes and Pigments, Edited by H. A. Lubs, Reinhold Publishing Co. (1955), Chapter 7, "Anthraquinone Dyes and Intermediates", (F. B. Stilmar and M. A. Perkins, E. C. Buxbaum), pp 351-352, 359-363, 372-375, 397-402, 412-415; Venkataraman, K., The Chemistry of Synthetic Dyes, Academic Press, New York (1952), Volume II, pp 835-844, 848-851.

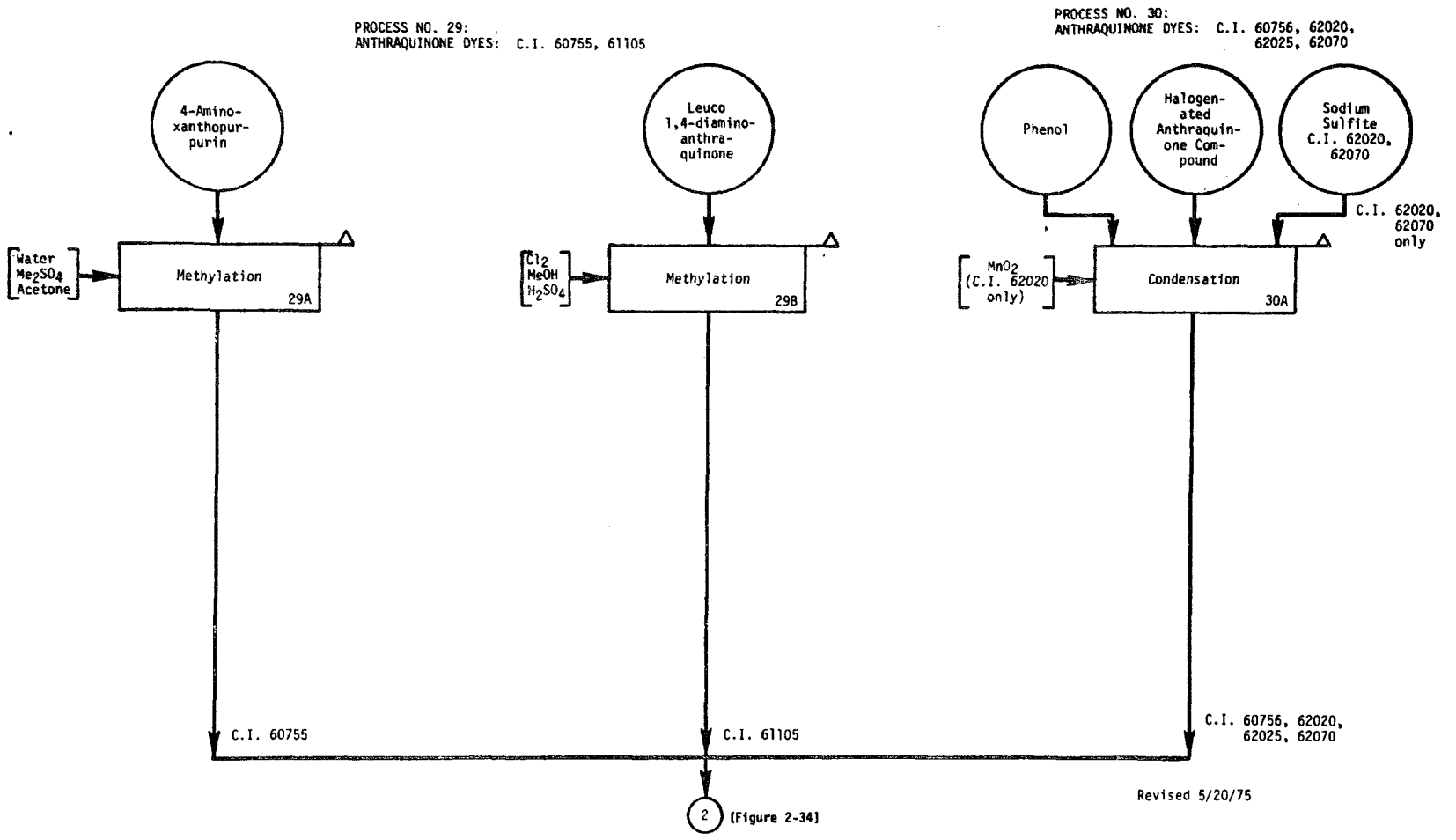

FIGURE 2-24. FLOW CHART FOR THE PRODUCTION OF SELECTED ANTHRAQUINONE DYES AND PIGMENTS FROM VARIOUS INTERMEDIATES

ANTHRAQUINONE DYES (METHYLATION) (C.I. 60755, 61105)

1. Function - The manufacture of these two dyes involves the treatment of the substrate anthraquinone compound with a methylating reagent. In one case (C.I. 60755), an hydroxyl group is methylated, and in the other case, an amino group is methylated. The reagents for making C.I. 60755 are relatively noncorrosive materials, so that stirred iron vessels are adequate. The use of chlorine in making C.I. 61105 necessitates the use of glass-lined equipment.

2. Input Materials - The starting materials needed to make these dyes are shown in Table 1.

TABLE 1. STARTING MATERIALS NEEDED TO MAKE C.I. 60755 and 61105

C.I. Number	Starting Materials
60755	4-aminoxanthopurpurin water dimethyl sulfate acetone
61105	chlorine methanol sulfuric acid

3. Operating Parameters - No information is available regarding operating parameters.

4. Utilities - No information is available regarding the needed utilities because the reaction conditions are unknown. However, it is very probable that electricity, cooling water, and steam are needed.

5. Waste Streams - The waste streams from the manufacturing of these dyes are brines containing small amounts of organic chemicals.

6. EPA Source Classification Code -

7. References - None.

ANTHRAQUINONE DYES (C.I. 60756, 62020, 62025 and 62070)

1. Function - The manufacture of these four dyes involves the replacement of active chlorine substituents in the α-position of an anthraquinone compound. In the case of two of the dyes, the displacing moiety is a phenoxy group, and in a third dye, the displacing moiety is the sulfonic acid group. In the case of the fourth dye, two halogens are replaced in a single process step--one by a sulfonic group and the other by a phenoxy group. To make C.I. 62020, a stirred vessel capable of operation at 40 psi is required. A glass-lined vessel would be desirable to withstand corrosion by chloride and sulfite salts.

2. Input Materials - The starting materials are listed below in Exhibit 1.

EXHIBIT 1. STARTING MATERIALS NEEDED TO MAKE C.I. 60756, 62020, 62025 and 62070

Components	Color Index Number			
	60756	62020	62025	62070
1-amino-2-bromo-4-hydroxy-anthraquinone	x			
phenol	x	x	x	
sodium hydroxide	x		x	
1,4-diamino-2,3-dichlor-anthraquinone		x	x	
sodium sulfite		x		x
manganese dioxide		x		
1-amino-2-bromo-4-(2-sulfo-*p*-toluidino) anthraquinone				x

3. Operating Parameters - To make C.I. 62020, one heats 1 part of 2,3-dichloro-1,4-diaminoanthraquinone with 5.5 parts of phenol, 3 parts of sodium sulfite, 0.25 parts of manganese dioxide and 10 parts of water at 140°. The gauge pressure developed would be only 40 psi. The yield of dye was not reported. Information about the manufacture of the other dyes could not be obtained from standard texts on dye technology.

4. Utilities - Electricity, steam, and cooling water are required. No information about the amounts needed could be obtained.

5. Waste Streams - The only waste streams from making these dyes would be brines containing small amounts of organic chemicals, and in some instances, small amounts of heavy metal ions such as manganese which could not be economically recovered.

6. EPA Source Classification Code -

7. References - Venkataraman, K., The Chemistry of Synthetic Dyes. Academic Press, New York (1952), Volume 2, p 850.

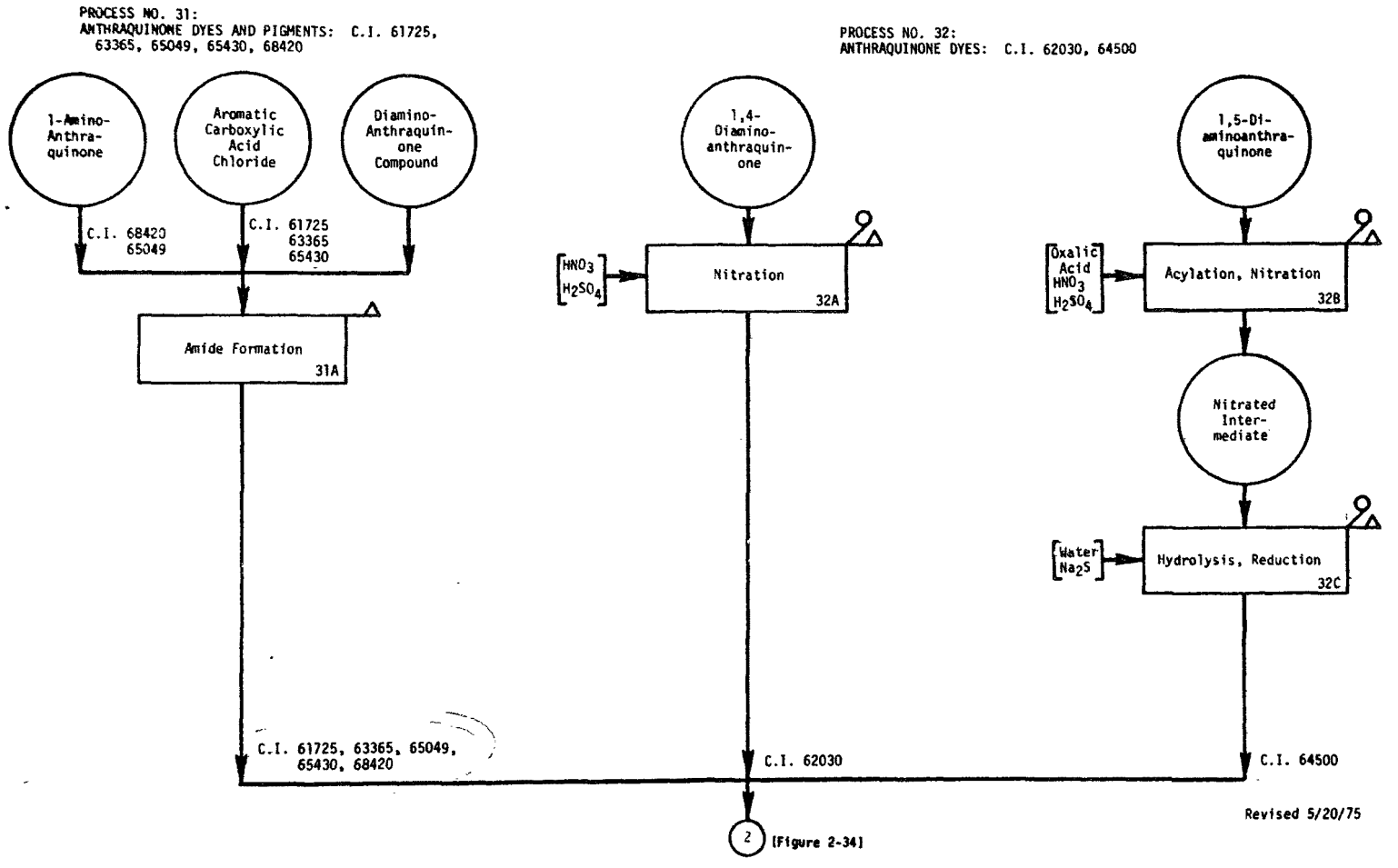

FIGURE 2-25. FLOW CHART FOR THE PRODUCTION OF SELECTED ANTHRAQUINONE DYES AND PIGMENTS FROM VARIOUS INTERMEDIATES

ANTHRAQUINONE DYES (AMIDE FORMATION) (C.I. 61725, 63365, 65049 and 68420)

1. Function - These dyes are all amides of aminoanthraquinone compounds. They are made quite simply by the reaction of an aromatic carboxylic acid chloride with the selected amino compound at temperatures from 50 to 160°. An acid acceptor (typically sodium carbonate) is sometimes used. An inert organic solvent is required as the reaction medium. The reactor should be glass-lined. Good stirring is necessary.

2. Input Materials - The necessary principal raw materials and their relationship to the product dyes are shown in the matrix below (Exhibit 1).

EXHIBIT 1. RELATIONSHIP OF PRINCIPAL STARTING MATERIALS TO PRODUCTS

	Color Index Number			
Starting Materials	61725	63365	65049	68420
Benzoyl Chloride	X			
Anisoyl Chloride		X		
Phthaloyl Chloride			X	
1,9-Anthrapyrinidine-2-carboxyl Chloride				X
1,5-Diaminoanthraquinone	X			
1,5-Diamino-4,8-dihydroxyanthraquinone		X		
1-Aminoanthraquinone			X	X

The inert organic solvent is typically a high boiling material in which the starting materials dissolve well. Frequently used materials are: nitrobenzene, o-dichlorobenzene and trichlorobenzene. To make 100 pounds of C.I. 61725, the following raw materials are needed:

1,5-Diaminoanthraquinone	69.6 pounds
Benzoyl Chloride	41.1 pounds
o-Dichlorobenzene	1,392.0 pounds

Virtually all of the o-dichlorobenzene is recovered. An acid receptor is not used. In consequence, the evolved hydrogen chloride must be trapped in a water scrubber.

3. Operating Parameters - The reaction is run at temperatures between 50 and 150° C. Because of the heat evolved, it may be necessary to cool the reacting mixture as the starting materials are combined.

4. Utilities - Electricity, steam, and cooling water are required, but no data are available regarding the necessary amounts.

5. Waste Stream - The waste stream from making these dyes would always be a brine containing small amounts of organic materials.

6. EPA Source Classification Code -

7. References - Fierz-David, H.E., and Blangey, L., Fundamental Processes of Dye Chemistry, Translated from the Fifth Austrian Edition by P. W. Vittum, Interscience Publishers, Inc., New York (1949), pp 322-323.

The Chemistry of Synthetic Dyes and Pigments. Edited by H. A. Lubs. Reinhold Publishing Company (1955), Chapter 7, "Anthraquinone Dyes and Intermediates" (F. B. Stilmar and M. A. Perkins), pp 363-4, 422.

ANTHRAQUINONE DYES (NITRATION OF DIAMINOANTHRAQUINONES) (C.I. 62030 and 64500)

1. Function - The dyes made by this process are related to those made by Process Number 30 in that dyes in both groups depend on the use of a selected diaminoanthraquinone compound as a principal starting material. This process may have only one step, as in making C.I. 62030, or it may require as many as four steps, as in making C.I. 64500. The process equipment for making these dyes would necessarily be a glass-lined vessel fitted with an efficient stirrer and means for heating and cooling.

2. Input Materials - The two principal organic chemicals required are 1,4-diaminoanthraquinone (C.I. 62030) and 1.5-diaminoanthraquinone (C.I. 64500). The inorganic materials used are: nitric acid, sulfuric acid, oxalic acid, and sodium sulfide. No quantitative information could be found regarding the manufacture of these dyes.

3. Operating Parameters - No information could be found in the available texts on dyes regarding the conditions for making these products.

4. Utilities - Electricity, steam, and cooling water are necessary utilities, but no data could be found on the amounts required.

5. Waste Streams - The nitration step in making each of these dyes is apt to lead to small amounts of gaseous emissions (nitrogen oxides). In a well-run plant, these would be minimal and could be contained by suitable scrubbers. The reduction with sodium sulfide on the intermediate nitro compound in making C.I. 64500 might generate further gaseous emissions (hydrogen sulfide). These too can be well controlled.

   The principal liquid waste streams would be spent acid from the nitration. These acids are diluted with water and the sulfuric acid could be concentrated and recovered. More nitrogen oxide emissions would be generated in this concentration step.

6. EPA Source Classification Code -

7. References - No references to making these products could be found in the standard texts on dyes.

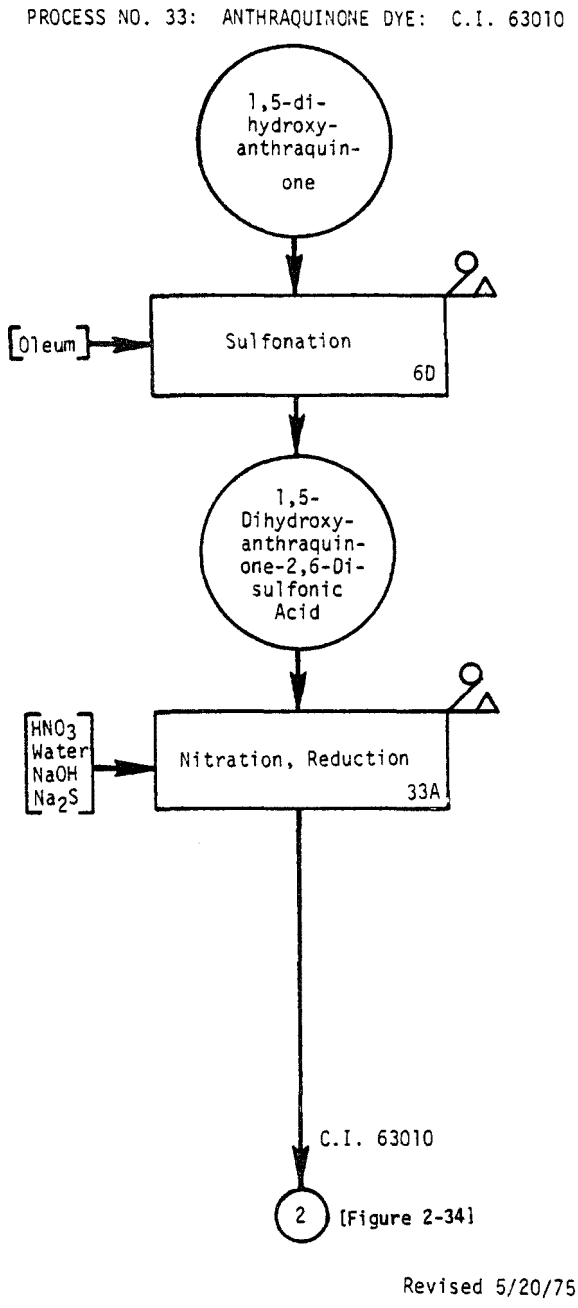

FIGURE 2-26. FLOW CHART FOR THE PRODUCTION OF AN ANTHRAQUINONE DYE FROM VARIOUS INTERMEDIATES

ANTHRAQUINONE DYES (C. I. 63010)

1. Function - This single dye is made by a three-step process involving first the sulfonation of 1,5-dihydroxyanthraquinone, followed by nitration of the intermediate 1,5-dihydroxyanthraquinone-2,6-disulfonic acid and reduction of the two nitro groups so introduced. The process steps for introducing the nitro groups and reducing them to amino groups are similar to those used in Process No. 31. All the steps in the process can be carried out in iron vessels with good agitation.

2. Input Materials - The necessary raw materials are: 1,5-dihydroxyanthraquinone, oleum, nitric acid, sulfuric acid, sodium hydroxide, and sodium sulfide. No information was available on the amounts of starting materials used in the process.

3. Operating Parameters - No information was available regarding reaction conditions in the standard texts on dyes.

4. Utilities - No information is available regarding the needed utilities because the reaction conditions are unknown. However, it is very probable that electricity, cooling water, and steam are needed.

5. Waste Streams - All the steps in the process may lead to small amounts of gaseous emissions: sulfur oxides, nitrogen oxides and hydrogen sulfides. In a well-run plant, these emissions can be held to very low levels. The liquid effluents are mainly spent acids. The byproduct elemental sulfur from the reduction of the nitro groups is easily recovered for other uses in the plant.

6. EPA Source Classification Code -

7. References - Venkataraman, K., The Chemistry of Synthetic Dyes, Academic Press, New York (1952), Volume II, pp 848,885.

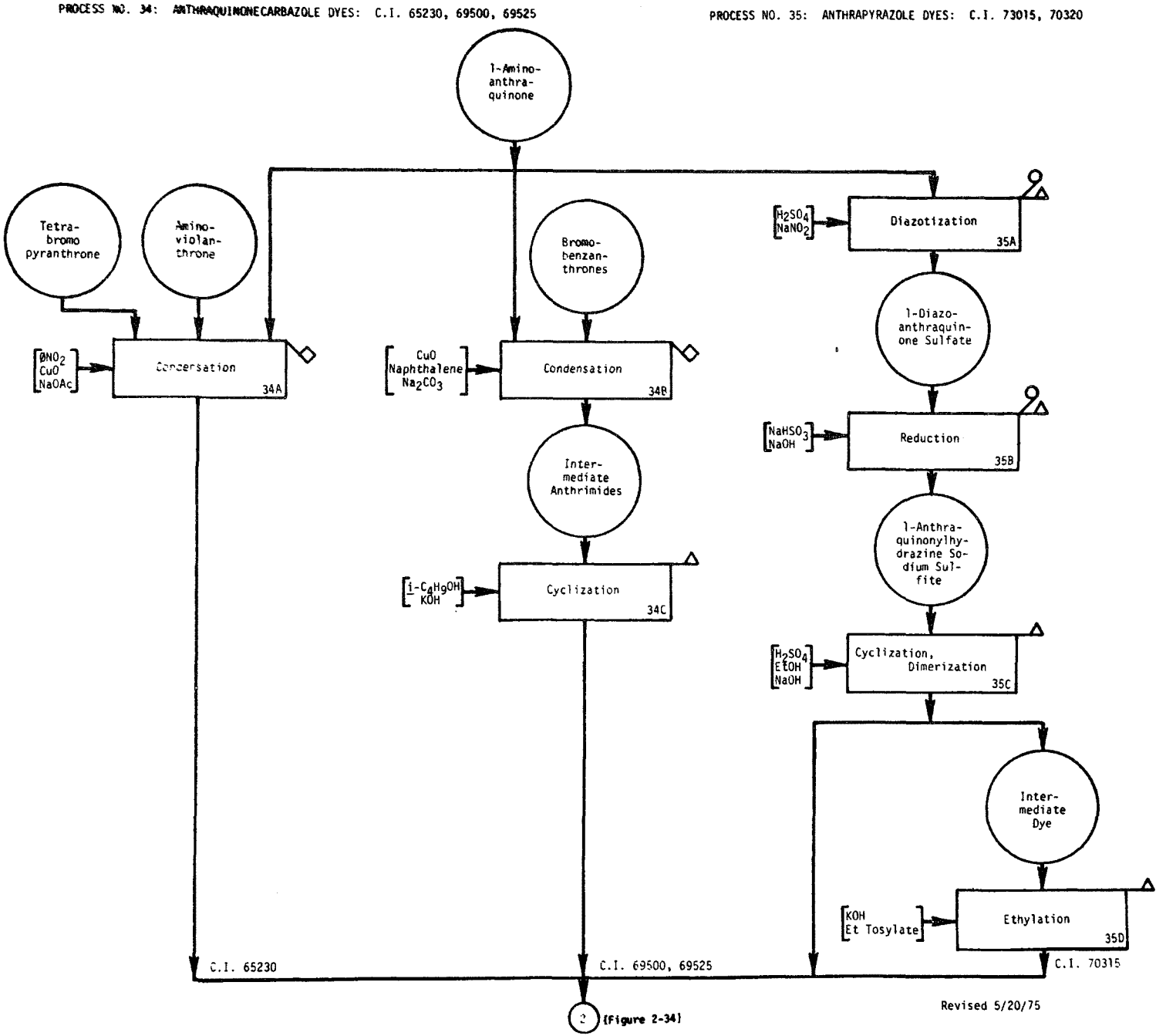

FIGURE 2-27. FLOW CHART FOR THE PRODUCTION OF SELECTED ANTHRAQUINONE DYES FROM VARIOUS INTERMEDIATES ANTHRAQUINONECARBAZOLES AND ANTHRAPYRAZOLES

ANTHRAQUINONE DYES (ANTHRACARBAZOLES) (C.I. 65230, 69500 and 69525)

1. Function - The dyes in this category have much in common with the products made by Process Numbers 36 and 38. They are all made by the condensation of a brominated or chlorinated polycyclic keto compound with one or more polycyclic compound carring an amino group. The dyes made by these three processes differ mainly in regard to the exact nature of the starting materials. Glass-lined vessels fitted with an efficient stirrer and a reflux condenser serve for carrying out the necessary reactions.

2. Input Materials - The three dyes made by this process respectively require the raw materials shown in the matrix below (Exhibit I).

EXHIBIT I. RAW MATERIALS NEEDED TO MAKE ANTHRACARBAZOLE DYES

Color Index Number Component	65230	69500	69525
1-Aminoanthraquinone	x	x	x
3-Bromobenzanthrone		x	
3,9-dibromobenzanthrone			x
Tetrabromopyranthrone	x		
Aminoviolanthrone	x		
Copper oxide	x	x	x
Nitrobenzene	x		
Naphthalene		x	x
Sodium acetate	x		
Sodium carbonate		x	x
Potassium hydroxide		x	x
Isobutyl alcohol		x	x

No information could be found on the amounts of materials necessary to make 100 pounds of the dyes.

3. Operating Parameters - The condensation of the brominated compound with the amino compounds is carried out at a high temperature in the range of 210-220°. The cyclization of the intermediate anthrimide in making C.I. 69500 and 69525 is accomplished at 108°.

4. Utilities - A liquid heat transfer system is needed, together with electricity, steam, and cooling water to carry out the various process steps. The amounts of these utilities needed are not known.

5. Waste Streams - No liquid effluents would result from the manufacture of these dyes. Solid wastes containing copper salts and sodium bromide would have economic value and could be recovered if enough material were processed on a single occasion. Distillation residues from the recovery of the organic solvents could best be disposed of by incineration.

6. EPA Source Classification Code -

7. References - Venkataraman, K., The Chemistry of Synthetic Dyes, Academic Press, New York (1952), Volume II, pp 967, 980.

ANTHRAQUINONE DYES (ANTHRAPYRAZOLES): (C.I. 70315 and 70320)

1. Function - These dyes are a relatively simple elaboration of the anthraquinone structure and are made from 1-amino-anthraquinone as the principal organic raw material.

2. Input Materials - The following starting materials are needed to make both dyes:
   - 1-aminoanthraquinone
   - sulfuric acid
   - sodium nitrite
   - sodium bisulfite
   - sodium hydroxide
   - ethyl alcohol

   In addition, either diethyl sulfate or ethyl tosylate is required to convert C.I. 70315 to C.I. 70320. No quantitative information could be found regarding the input materials.

3. Operating Parameters - The diazotisation of 1-aminoanthraquinone is done at 15-35° in sulfuric acid with 40 percent nitrosylsulfuric acid made from sodium nitrite and sulfuric acid. The reaction takes four hours. Reduction of the diazo compound to a hydrazine is done at 20-70° with sodium bisulfite, followed by ring closure to the pyrazolanthrone with 100 percent sulfuric acid at 90-95°. No further information could be found regarding the reaction parameters.

4. Utilities - Electricity, cooling water, and steam are needed, but the amounts necessary are not known.

5. Waste Streams - A waste stream of spent acid would result from the diazotization step. Nitrogen oxides might be evolved in the course of the diazotization. The sodium sulfite used to reduce the diazo compound might be a source of sulfur dioxide emissions. A brine containing small amounts of organic materials would be a byproduct in cyclizing the hydrazine compound to the anthrapyrazole.

6. EPA Source Classification Code -

7. References - The Chemistry of Synthetic Dyes and Pigments, Edited by H. A. Lubs, Reinhold Publishing Co. (1955), Chapter 7, "Anthraquinone Dyes and Intermediates" (F. B. Stilmar) pp 468-470; Venkataraman, K., The Chemistry of Synthetic Dyes, Academic Press, New York (1952), Volume II, pp 993-994.

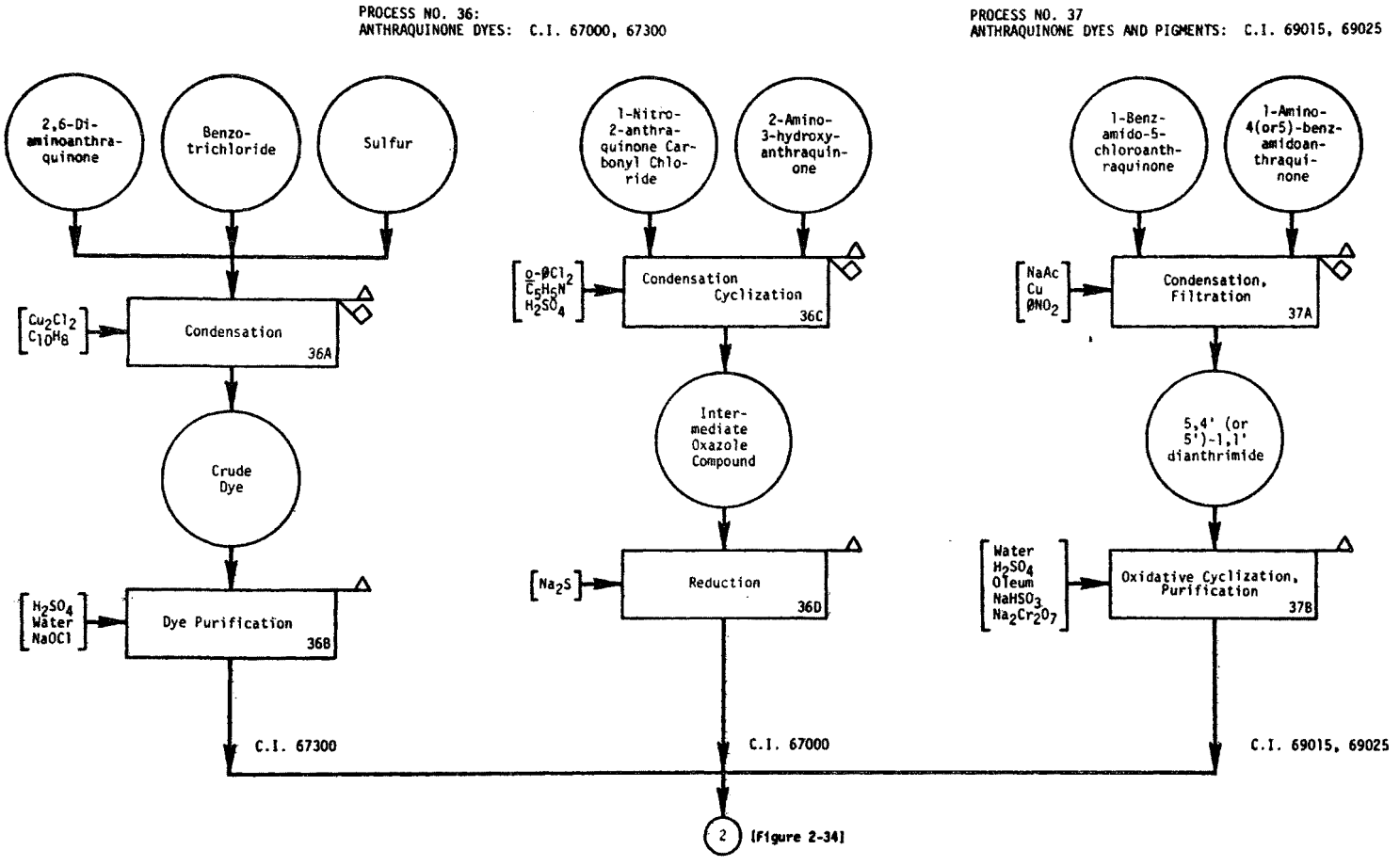

FIGURE 2-28. FLOW CHART FOR THE PRODUCTION OF SELECTED ANTHRAQUINONE DYES AND PIGMENTS FROM VARIOUS INTERMEDIATES

ANTHRAQUINONE DYES (AN OXAZOLE AND A THIAZOLE TYPE) (C.I. 67000 and 67300)

1. Function - These two dyes possess structural similarities in common, and both are made from aminoanthraquinone compounds. Batch type reaction vessels made of iron and fitted with good stirrers should serve for carrying out both reactions. The vessel for making C.I. 67300 must also have a reflux condenser and provision for heating the reaction mixture to 220°. The vessel for making C.I. 67000 also must have a cooling coil to remove the heat generated by a moderately exothermic first reaction. The cyclization reaction is carried out with heating.

2. Input Materials - To make C.I. 67300, the following materials are required:
   - 2,6-diaminoanthraquinone
   - benzotrichloride
   - sulfur
   - naphthalene
   - cuprous chloride (catalyst)

   The naphthalene serves only as solvent and is recovered. To make C.I. 67000, the following materials are required:
   - 1-nitro-2-anthraquinone carbonyl chloride
   - 2-amino-3-hydroxyanthraquinone
   - pyridine
   - sulfuric acid
   - sodium sulfide
   - o- dichlorobenzene

3. Operating Parameters - In making C.I. 67300, the reaction mixture is heated at 220° for 10 hours. In making C.I. 67000, the reaction between the aminoanthraquinone and the acid chloride is exothermic. The cyclization of the resulting amide to the desired oxazole is carried out in o-dichlorobenzene as solvent at 140° in 5 hours. No further information on the operating parameters for making these dyes could be found.

4. Utilities - A liquid heat transfer system is necessary in making C.I. 67300. Electricity, steam, and cooling water are also necessary utilities for making these colors. The amounts needed are not known.

5. Waste Streams - Solid wastes arise in the form of distillation residues obtained in recovering the pyridine and solvent materials. They would likely be dealt with by incineration. The liquid effluents would be brines, spent sulfuric acid and a sodium thiosulfate solution containing small amounts of organic chemicals. The spent acid and the sodium thiosulfate could be economically recovered.

6. EPA Source Classification Code -

7. References - Venkataraman, K., The Chemistry of Synthetic Dyes, Academic Press, New York (1952), Volume II, pp 911-912, 1115-1116.

ANTHRAQUINONE DYES AND PIGMENTS (ANTHRACARBAZOLES) (C.I. 69015 and 69025)

1. Function - The dyes made by this process have a structural similarity to the dyes made by Process Numbers 33 and 38. They differ mainly in regard to the nature of the starting materials. The reactions are best carried out in glass-lined vessels fitted with efficient stirrers and a reflux condenser.

2. Input Materials - Both products depend on 1-benzamido-5-chloroanthraquinone as one of the two principal starting materials. To make C.I. 69015, this compound is combined with 1-amino-4-benzamidoanthraquinone. The other product is made by combining this same compound with 1-amino-5-benzamido-anthraquinone. The other raw materials needed are:
   - sodium acetate
   - copper (powder) or cuprous chloride
   - nitrobenzene
   - sodium dichromate
   - sulfuric acid
   - sodium bisulfite

   No information is available on the amounts of materials necessary to make 100 pounds of these products.

3. Operating Parameters - The condensation of the two principal raw materials is carried out at the boiling point of nitrobenzene, 211°. The cyclization reaction to form the dye is accomplished with sulfuric acid containing a very small amount of sulfur trioxide. The reaction requires 6-10 hours to complete. No further information was available regarding the operating parameters.

4. Utilities - A liquid heat transfer system is necessary, together with electricity and cooling water in unknown amounts.

5. Waste Streams - The principal waste streams from the manufacture of these colors are more or less concentrated solutions of sulfuric acid, containing small amounts of organic chemicals. Other liquid effluents are aqueous solutions containing salt, copper ion, chromium ion and sulfate ion.

6. EPA Source Classification Code -

7. References - The Chemistry of Synthetic Dyes and Pigments, Edited by H. A. Lubs, Reinhold Publishing Co. (1955), Chapter 7, "Anthraquinone Dyes and Intermediates", (M. S. Whelen), pp 461-465; Venkataraman, K., The Chemistry of Synthetic Dyes, Academic Press, New York (1952), Volume II, pp 901-903.

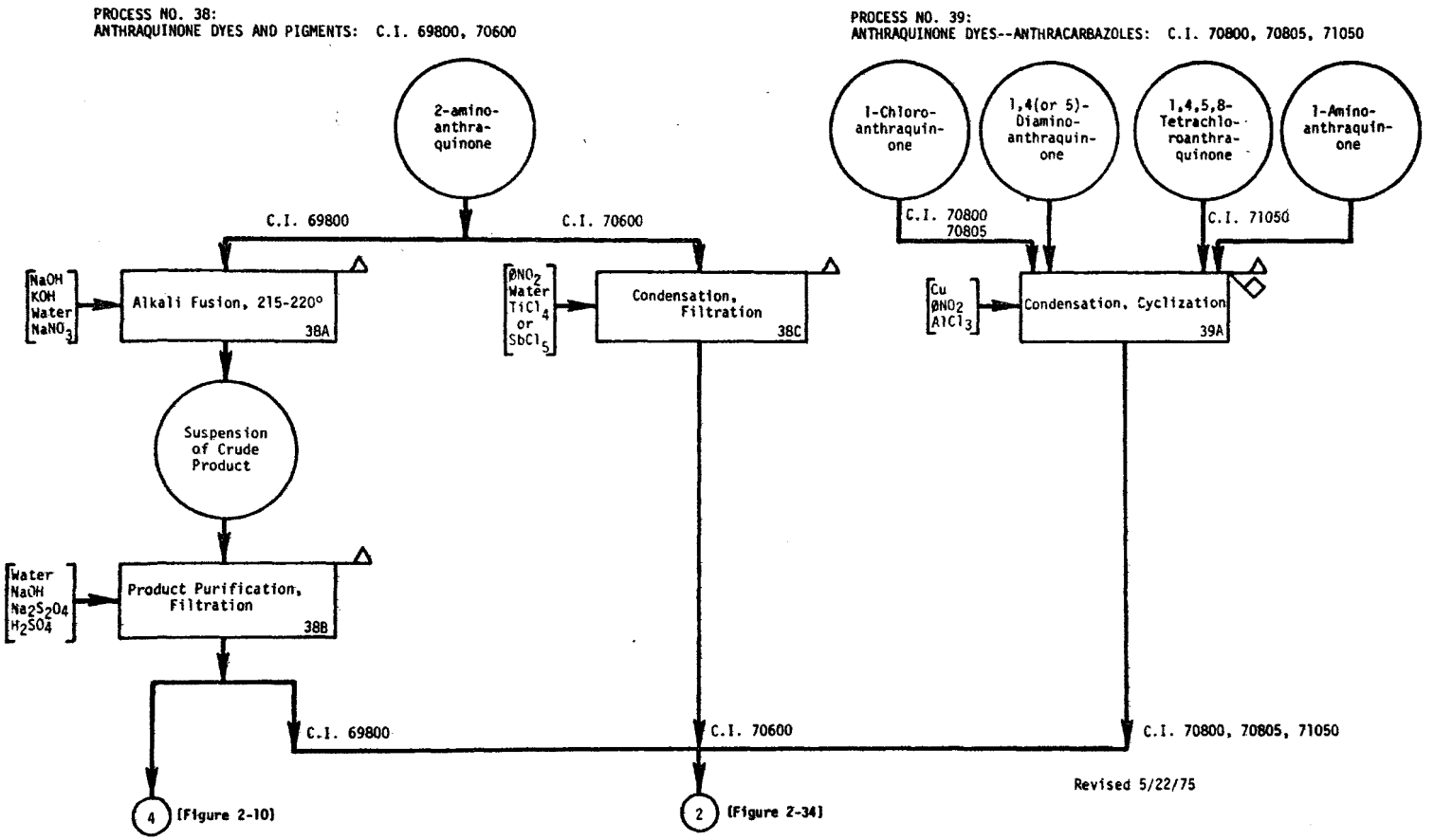

FIGURE 2-29. FLOW CHART FOR THE PRODUCTION OF SELECTED ANTHRAQUINONE DYES AND PIGMENTS FROM VARIOUS INTERMEDIATES

ANTHRAQUINONE DYES AND PIGMENTS--INDANTHRONE AND FLAVANTHRONE (C.I. 69800 and 70600)

1. Function - These two important colors are made from 2-aminoanthraquinone as the principal organic chemical starting materials. The manufacture of C.I. 69800 is carried out in an iron vessel capable of being heated to a high temperature. The manufacture of C.I. 70600 must be done in a glass-lined vessel with a reflux condenser and an efficient stirrer. This vessel also must be heated to a high temperature.

2. Input Materials - Both colors are based on 2-aminoanthraquinone. For the case of C.I. 60800, materials necessary to make 100 pounds of the color are shown in Table 1.

TABLE 1. STARTING MATERIALS NEEDED TO MAKE 100 POUNDS OF C.I. 69800

sodium nitrate	25.0	pounds
potassium hydroxide	2.94	"
sodium hydroxide	1.30	"
sodium hydrosulfite	57.0	"
sulfuric acid	33.0	"
water	793	gallons

In the case of C.I. 70600, no information could be found regarding the amounts of materials necessary to make 100 pounds of the color. The list of materials required is as follows:

2-aminoanthraquinone
nitrobenzene
titanium tetrachloride or
antimony pentachloride

3. Operating Parameters - To make C.I. 69800 from 2-aminoanthraquinone, the fusion reaction must be done starting at 180° and finishing at 225° over a period of 2-3 hours. Careful temperature control is imperative to obtain the best possible yield of product. The treatment of 2-aminoanthraquinone at 100-175° with titanium tetrachloride is reported to give a good yield of C.I. 70600.

4. Utilities - A hot liquid heat transfer system is needed, together with electricity, steam, and water in unknown amounts.

5. Waste Streams - The waste products from making these colors are all aqueous solutions. The two streams from making C.I. 69800 are strongly alkaline. One of the streams contains sodium sulfate as well.

6. EPA Source Classification Code -

7. References - Venkataraman, K., The Chemistry of Synthetic Dyes, Academic Press, New York (1952), Volume II, pp 931-938, 988-990.

ANTHRAQUINONE DYES (ANTHRACARBAZOLES) (C.I. 70800, 70805, and 71050)

1. Function - These three dyes are closely related to the anthracarbazole dyes made by Process Numbers 33 and 36. One of the starting materials, 1-aminoanthraquinone, is used both in Process Number 33 and to make C.I. 71050 (Process Number 38). Otherwise, different starting materials are used in the three processes. As in the related processes, the reactions involved are best carried out in glass-lined vessels fitted with a reflux condenser and an efficient stirrer.

2. Input Materials - The starting materials needed to make these dyes are shown in the matrix below (Exhibit 1). The amounts of these materials needed to make 100 pounds of a dye are not available in the accessible literature.

EXHIBIT 1. STARTING MATERIALS NEEDED TO MAKE ANTHRACARBAZOLE DYES C.I. 70800, 70805 and 71050

Starting Materials	Color Index Number		
	70800	70805	71050
1,4-diaminoanthraquinone	x		
1-chloro (or bromo)-anthraquinone	x	x	
aluminum chloride	x	x	x
picoline	x	x	
1,5-diaminoanthraquinone		x	
sodium hypochlorite		x	
copper			x
sodium chloride			x
nitrobenzene			x
1-aminoanthraquinone			x
1,4,5,8-tetrachloroanthraquinone			x

3. Operating Parameters - The reaction to form C.I. 70800 is carried out at 135°. The formation of C.I. 71050 requires the condensation of 1-aminoanthraquinone (4 moles) with one mole of 1,4,5,8-tetrachloroanthraquinone at 205° over a period of 36 hours, using nitrobenzene as solvent, sodium carbonate to neutralize the evolved hydrogen chloride and copper powder as catalyst. Cyclization to desired dye is done with aluminum chloride and sodium chloride at 160° in 2-3 hours. No further information on operating parameters is available.

4. Utilities - A hot liquid heat transfer system is needed, together with electricity, steam, and water.

5. Waste Streams - A solid waste would be generated as a distillation residue in recovering the nitrobenzene. Brines containing copper and aluminum ions and small amounts of organic compounds would be obtained in washing the dyes.

6. EPA Source Classification Code -

7. References - Venkataraman, K., The Chemistry of Synthetic Dyes, Academic Press, New York (1952), Volume II, pp 906-907.

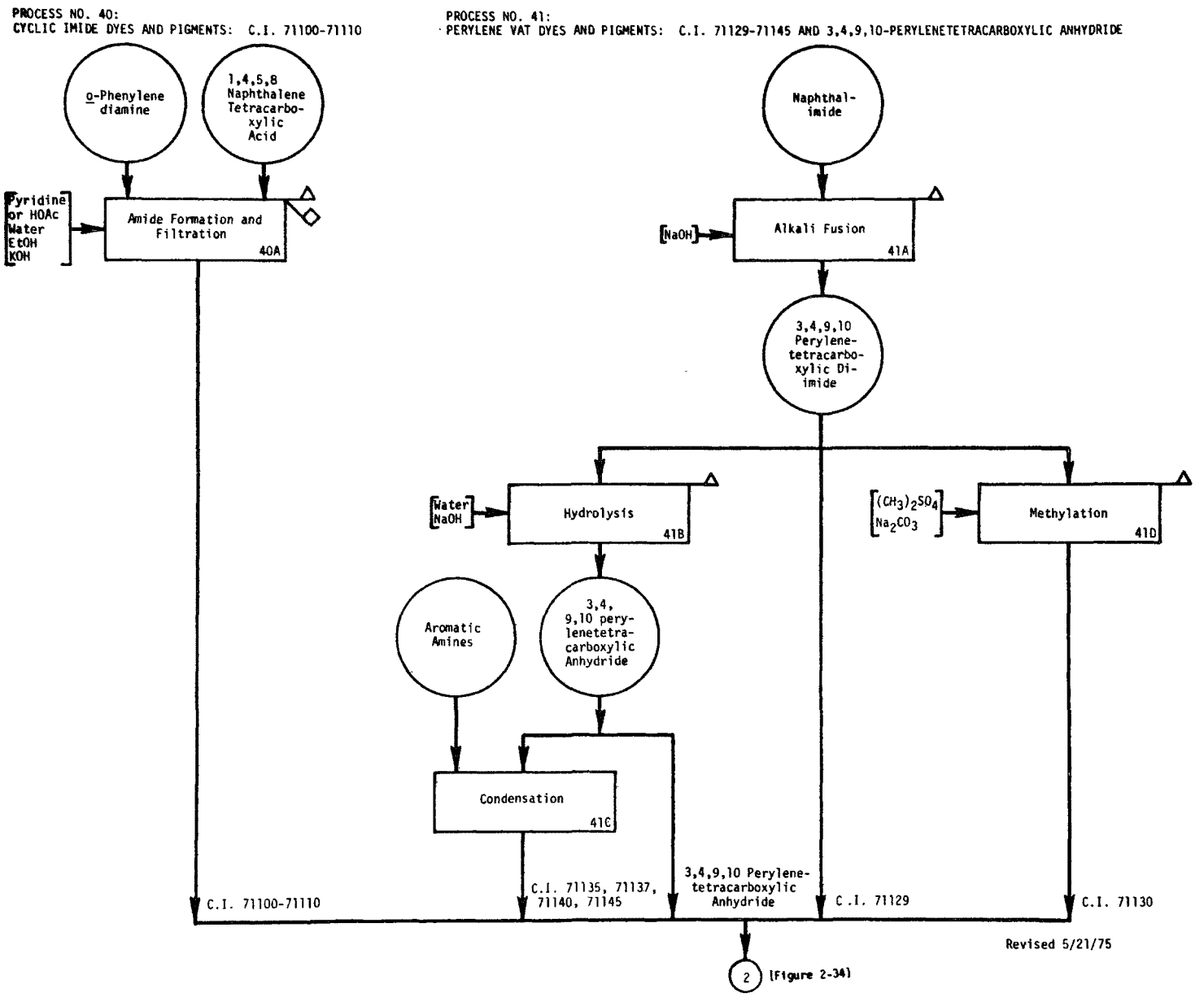

FIGURE 2-30. FLOW CHART FOR THE PRODUCTION OF SELECTED CYCLIC IMIDE AND PERYLENE VAT DYES AND PIGMENTS FROM VARIOUS INTERMEDIATES

CYCLIC IMIDE DYES AND PIGMENTS (C.I. 71100-71110)

1. Function - These colors are not related to any others. Although only a single process step is required to make them from the two required starting materials, further treatment of the primary product (C.I. 71110) is necessary to obtain the other two products. The necessary condensation reactions to make the primary product can best be carried out in a closed reaction vessel made of 316 stainless steel. Subsequent treatments to make the other two colors can be done in steel vessels fitted with efficient stirrers and a reflux condenser.

2. Input Materials - The materials needed to make 100 pounds of C.I. 71110 are shown in Table 1 below.

TABLE 1. STARTING MATERIALS NEEDED FOR 100 POUNDS OF C.I. 71110

1,4,5,8-naphthalene tetracarboxylic acid	68	pounds
o-phenylenediamine	27.6	"
acetic acid	459	"

To make 100 pounds of C.I. 71105, the starting materials shown in Table 2 are needed.

TABLE 2. STARTING MATERIALS NEEDED FOR 100 POUNDS OF C.I. 71105

C.I. 71110	169.5	pounds
potassium hydroxide	339	"
ethanol	1695	"

This process step simultaneously yields about 69 pounds of C.I. 71100.

3. Operating Parameters - The reaction of the primary starting materials takes place over a period of 6-7 hours at 120° (2° above the boiling point of the solvent medium), necessitating the use of the vessel slightly above atmospheric pressure. The treatments with the potassium hydroxide in alcohol take place at 75° over a period of one hour.

4. Utilities - Electricity, steam, and water are required in unknown quantities.

5. Waste Streams - Small amounts of solid wastes result from distillation residues obtained in the recovery of acetic acid and ethanol. Aqueous streams containing organic chemicals result from washing the finished colors. These liquid effluents would contain acetic acid, o-phenylenediamine, ethanol, and potassium hydroxide among other materials.

6. EPA Source Classification Code -

7. References - Venkataraman, K., The Chemistry of Synthetic Dyes, Academic Press, New York (1952), Volume II, pp 1191-1192.

PERYLENE VAT DYES AND PIGMENTS (C.I. 71129-71145 AND 3,4,9,10-PERYLENETETRACARBOXYLIC ANHYDRIDE)

1. Function - These colors are not related to any other class of colors. Their manufacture depends primarily on the conversion of the starting material to C.I. 71129. The other products are chemical modifications of this color. All the process steps for making these colors can be carried out in iron vessels fitted with stirrers.

2. Input Materials - The seven colors all depend on first making C.I. 71129 from sodium hydroxide and naphthalimide. This color serves as an intermediate which reacts with other chemicals to make the other products as shown in Table 1.

TABLE 1. AUXILIARY CHEMICALS REQUIRED TO MAKE PERYLENE VAT DYES AND PIGMENTS

Color Index No.	Auxiliary Chemicals
71130	dimethyl sulfate sodium carbonate
71135	*p*-chloroaniline water
71137	3,5-dimethylaniline water
71140	*p*-anisidine water
71145	*p*-phenetidine water
3,4,9,10-perylene-tetracarboxylic anhydride	water

3. Operating Parameters - No information is available on the operating parameters for the process steps.

4. Utilities - Electricity, steam, and water are needed in unknown quantities.

5. Waste Streams - Liquid effluents containing alkali, sodium sulfate, and organic compounds result from making these colors.

6. EPA Source Classification Code -

7. References - Venkataraman, K., The Chemistry of Synthetic Dyes, Academic Press, New York (1952), Volume II, pp 949-950.

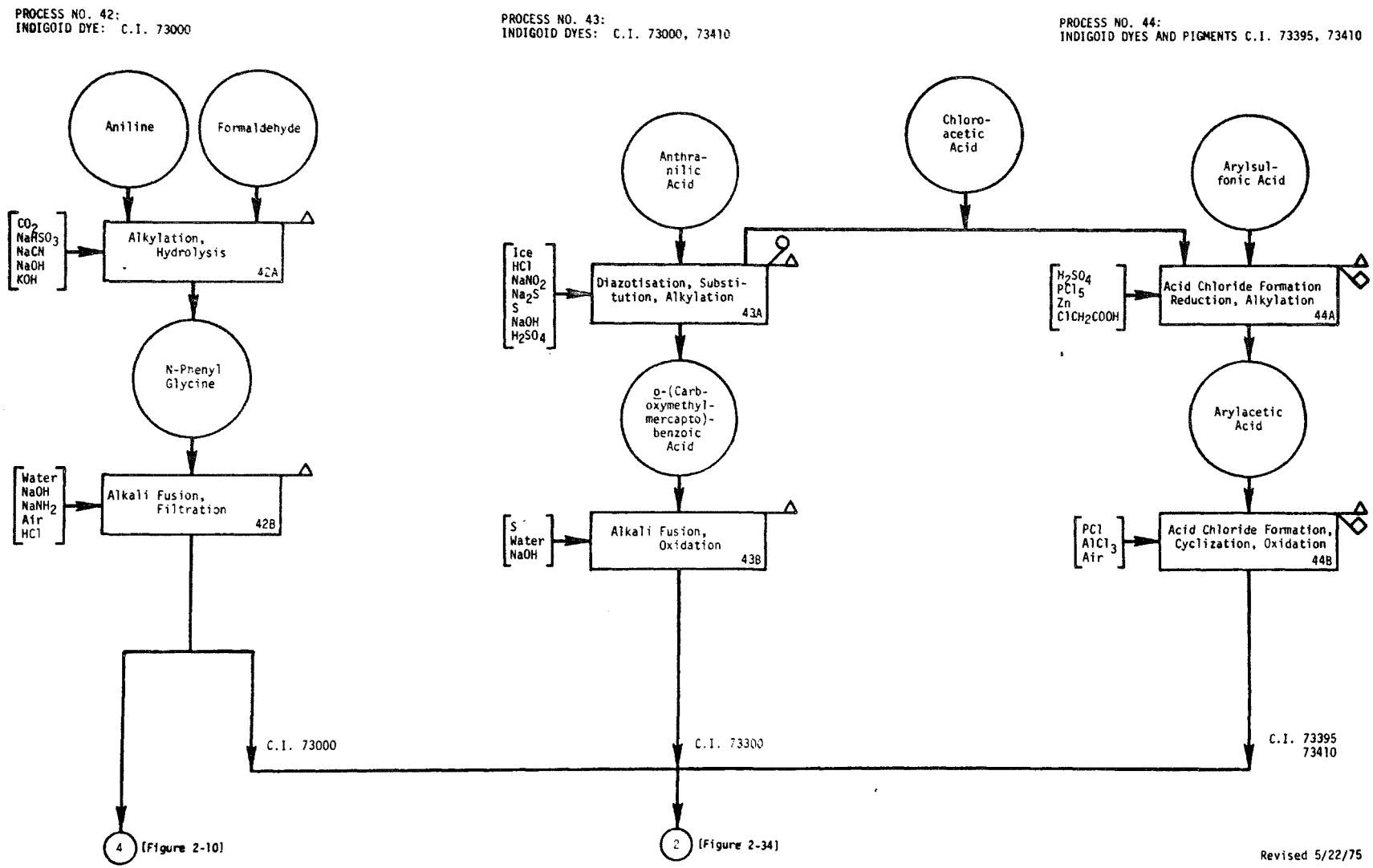

FIGURE 2-31. FLOW CHART FOR THE PRODUCTION OF SELECTED INDIGOID DYES AND PIGMENTS FROM VARIOUS INTERMEDIATES

INDIGOID DYE (C.I. 73000)

1. Function - This dye is a classical material -- indigo. It is the progenitor of a large number of related materials, some of which are made by Process Numbers 42, 43, 44, and 45. Indigo is made in two process steps, the first of which (42A) can best be carried out in a steel autoclave, and the second (42B) in a steel fusion vessel.

2. Input Materials - Although the quantities of starting materials for making C.I. 73000 are given in the reference cited below, internal inconsistencies in the information were found. The raw materials are listed in Table 1.

TABLE 1. RAW MATERIALS NEEDED TO MAKE C.I. 73000

aniline
sodium hydroxide
sodium cyanide
potassium hydroxide
sodium amide
water
air
hydrochloric acid
ice

3. Operating Parameters - The reaction between aniline and sodium cyanide is carried out under a carbon dioxide pressure of 45 psi, at 50-90° for 30 minutes. The resulting nitrile is hydrolyzed at 110° in 90 minutes, the unchanged aniline extracted with hot benzene and the solution of alkali phenylglycinate evaporated to dryness. The dried alkali phenylglycinate is fused with sodium amide and caustic alkali at 220° for 5-6 hours and discharged into an ice-water slurry.

4. Utilities - Electricity, refrigeration, compressed air, steam, water, and a hot liquid heat transfer system are required. The amounts of the various utilities needed are not known.

5. Waste Streams - The waste streams of caustic alkali must be recovered in the interest of good economy. Waste wash waters are obtained containing small amounts of salts and organic compounds.

6. EPA Source Classification Code -

7. References - Venkataraman, K., The Chemistry of Synthetic Dyes, Academic Press, New York (1952), Volume II, pp 1013-1016.

INDIGOID DYE(C.I. 73300)

1. Function - This dye, thioindigo, is structurally related to the indigoid dyes made by Processes 42, 44, and 45. C.I. 73300 is the sulfur analog of C.I. 73000. The manufacture of thioindigo requires two process steps. The first step (43A) is done in an open stainless steel vessel fitted with an efficient stirrer, and the second step (43B) must be carried out in a steel vessel which can be evacuated and heated as well.

2. Input Materials - The quantities of material needed to make 100 pounds of C.I. 73300 are shown in Table 1 below.

TABLE 1. STARTING MATERIALS NEEDED TO MAKE 100 POUNDS OF C.I. 73300

anthranilic acid	16.2	pounds
water	750	gallons
sodium nitrite	81.2	pounds
hydrochloric acid (33.3% HCl)	538	"
sodium sulfide	200	"
iron borinzo	235.3	"
sulfur	197.2	"
chloroacetic acid	122.4	"
sodium hydroxide	482.6	"
sodium carbonate	129	"
sulfuric acid	200	"
ice	1176	"

3. Operating Parameters - The conversion of anthranilic acid to the intermediate o-(carboxymethyl) mercaptobenzoic acid (43A) requires about 4 hours at various temperatures ranging from 0 to 100°. Fusion of this intermediate (43B) with caustic involves first grinding the reacting materials in a ball mill and then heating the mixture in an evacuated vessel 2-3 hours at 205°.

4. Utilities - Electricity, water, steam, refrigeration, a vacuum system and a hot oil heat transfer system are needed. The amounts of utilities required are not known.

5. Waste Streams - The sodium hydroxide waste streams must not be discharged, but rather must be recovered for recycling in the interests of economy. Some dilute alkali solutions are inevitably discharged. They also contain sodium chloride and small amounts of organic chemicals. The diazotization step (43A) inevitably leads to small emissions of nitrogen oxides.

6. EPA Source Classification Code -

7. References - Fierz-David, H. E. and Blangey, L., Fundamental Processes of Dye Chemistry, Translated from the Fifth Austrian Edition by P. W. Vittum, Interscience Publishers, Inc., New York (1949), pp 330-331; Venkataraman, K., The Chemistry of Synthetic Dyes, Academic Press, New York (1952), Volume II, pp 1031-1032.

INDIGOID DYE AND PIGMENT (C. I. 73395 and 73410)

1. Function - These two colors are members of the thioindigo family of colors, and are closely related to the dyes made by Process Numbers 42, 43, 45, and 46. Although the basic chemical structure of these dyes is the same as that for the dyes made by Process Numbers 43 and 45, the process is different in chemical details. Two process steps are involved. The corrosive nature of the materials involved dictates the use of glass-lined reaction vessels. Good stirring is needed for all of the reactions, and provision must be made for the trapping of hydrogen chloride evolved in both process steps.

2. Input Materials - The starting materials common to the manufacture of these two colors are shown in Table 1.

TABLE 1. STARTING MATERIALS COMMON TO THE MANUFACTURE OF C.I. 73395 and 73410

phosphorus pentachloride
phosphorus trichloride
zinc dust
sulfuric acid
aluminum trichloride
chloroacetic acid
air

In addition to these materials, 4-chloro-2,5-dimethylbenzenesulfonic acid is needed to make C.I. 73395, and 2-naphthalenesulfonic acid to make C.I. 73410. The amounts needed to make 100 pounds of these colors could not be ascertained.

3. Operating Parameters - No information could be obtained regarding the conditions for the process steps.

4. Utilities - Electricity, water, steam, and compressed air are the needed utilities, but the amounts required are unknown.

5. Waste Streams - The effluents from the manufacture of these dyes are dilute hydrochloric acid, phosphorus oxychloride, aqueous zinc chloride solution and aluminum chlorohydrate solution. Solid waste residues would be formed from the distillation of various intermediate materials.

6. EPA Source Classification Code -

7. References - The Chemistry of Synthetic Dyes and Pigments, Edited by H. A. Lubs, Reinhold Publishing Co. (1955), Chapter 8, "Indigoid Dyes" (A. J. Johnson), pp 567-568; Venkataraman, K., The Chemistry of Synthetic Dyes, Academic Press, New York (1952), Volume II, pp 1034, 1036.

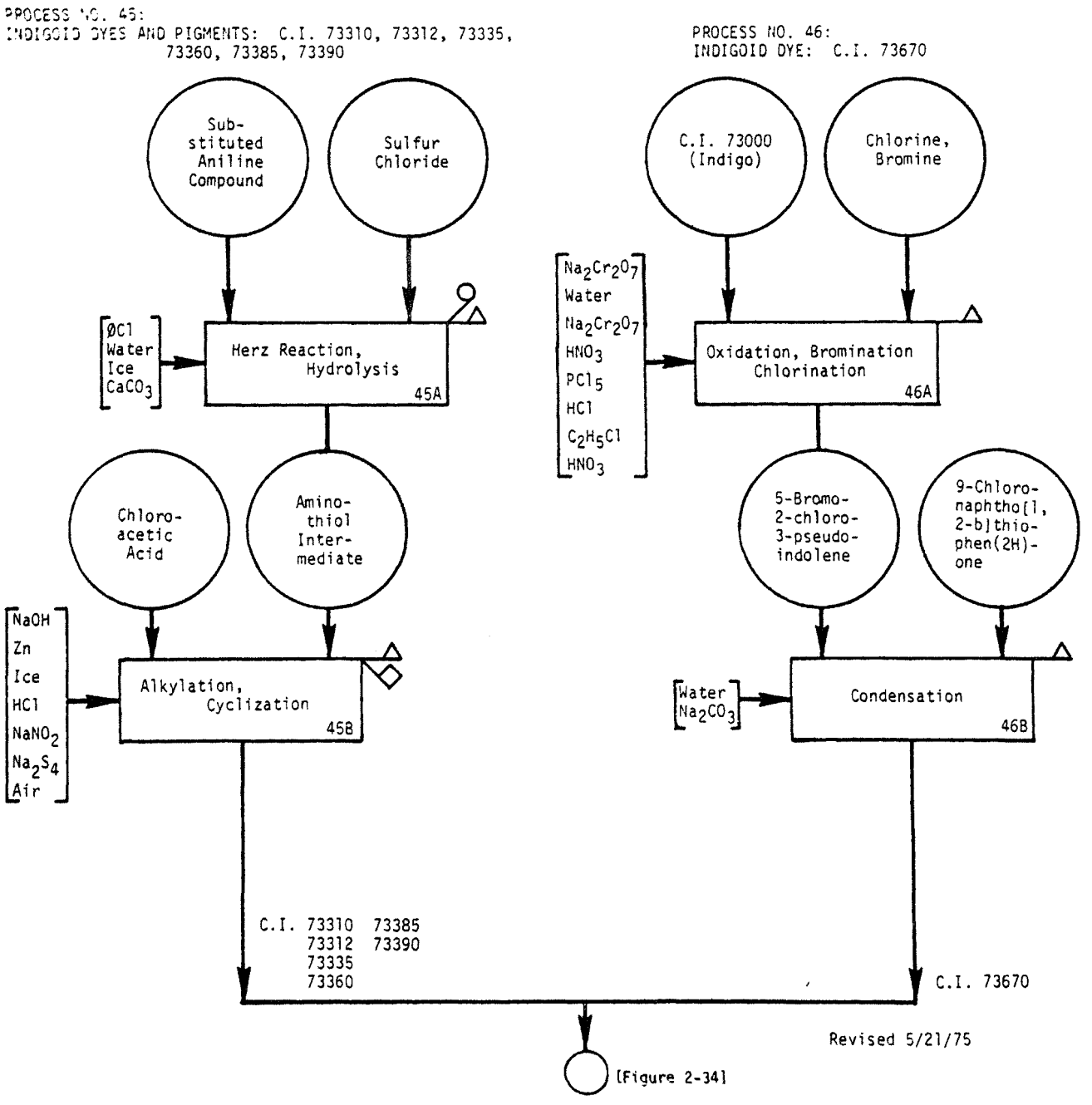

FIGURE 2-32. FLOW CHART FOR THE PRODUCTION OF SELECTED INDIGOID DYES AND PIGMENTS FROM VARIOUS INTERMEDIATES

INDIGOID DYES AND PIGMENTS

1. Function - The six thioindigoid colors made by this process are structurally related to the colors made by Process Numbers 42, 43, and 44. Two process steps are needed to make these products. The corrosive nature of the materials used necessitates the use of glass-lined equipment. Because low temperatures are involved in two of the steps (one of which is a diazotization) ice is used in substantial quantities. Good stirring is required in all the reactions which are carried out.

2. Input Materials - The starting materials common to the manufacture of the seven colors are shown in Table 1.

TABLE 1. STARTING MATERIALS COMMON TO THE MANUFACTURE OF SIX THIOINDIGO COLORS

sulfur chloride	sodium tetrasulfide
chlorobenzene	sodium cyanide
ice	cuprous chloride
water	sodium bicarbonate
chloroacetic acid	calcium carbonate
zinc dust	sodium chloride
sodium hydroxide	sulfuric acid
hydrochloric acid	
sodium nitrite	

In addition to these starting materials, a principal organic starting material is used for each of the six colors, as shown in Table 2.

TABLE 2. PRINCIPAL ORGANIC STARTING MATERIALS FOR SIX THIOINDIGO COLORS

Organic Starting Material	C.I. Number
o-chloroaniline	73310
2,5-dichloraniline	73312
p-phenetidine	73335
o-toluidine	73360
4-chloro-o-toluidine	73385
5-chloro-o-toluidine	73390

No information could be obtained about the quantities of materials needed to make 100 pounds of any of these colors.

3. Operating Parameters - Temperature conditions for the several reactions range from 0 to 70°. No significant further information could be found regarding the reaction conditions.

4. Utilities - The utilities needed are: electricity, refrigeration, steam, compressed air, vacuum, and water. No information was available as to the amounts required.

5. Waste Streams - The liquid waste streams from making these colors include: brines contaminated with varying amounts of organic chemicals, a brine containing cyanide ion and certain amounts of organic chemicals. A solid waste of copper sulfide would result from Process Step 43B.

6. EPA Source Classification Code -

7. References - The Chemistry of Synthetic Dyes and Pigments, Edited by H. A. Lubs, Reinhold Publishing Co. (1955), Chapter 8, "Indigoid Dyes" (A. J. Johnson) p 566; Venkataraman, K., The Chemistry of Synthetic Dyes, Academic Press, New York (1952), Volume II, pp 1026-1028, 1033, 1034.

INDIGOID DYE (C.I. 73670)

1. Function - The molecule of this dye is a hybrid. One-half is made from indigo (C.I. 73000, Process No. 42) and the other half is a specially made intermediate structurally related to the thioindigo colors. Glass-lined vessels fitted with efficient stirrers are needed for the two processing steps.

2. Input Materials - The starting materials needed to make this dye are shown in Table 1.

TABLE 1. STARTING MATERIALS NEEDED TO MAKE C.I. 73670

indigo	nitric acid
water	sodium carbonate
sodium dichromate	9-chloronaphtho[1,2-b]thiophen (2H-one)
bromine	
chlorine	
hydrochloric acid	
chlorobenzene	

Not enough information about the reactions could be found to determine how much of these materials is needed to make 100 pounds of the dye.

3. Operating Parameters - One of the reaction steps is exothermic and must be maintained below 17° to obtain a high yield. Another reaction requires a temperature of 125° with chlorobenzene (b.p. 132°) as solvent. No other information could be found about operating parameters.

4. Utilities - Electricity, steam, refrigeration, and water and required in unknown quantities.

5. Waste Streams - The waste streams are brines containing small amounts of organic chemicals. One of the brine streams (from step 46A) would likely contain chromium ion.

6. EPA Source Classification Code -

7. References - Venkataraman, K., The Chemistry of Synthetic Dyes, Academic Press, New York (1952), Volume II, pp 1024, 1029, 1030.

PROCESS NO. 47: PHTHALOCYANINE DYES AND PIGMENTS: C.I. 74160,74240,74260,74460

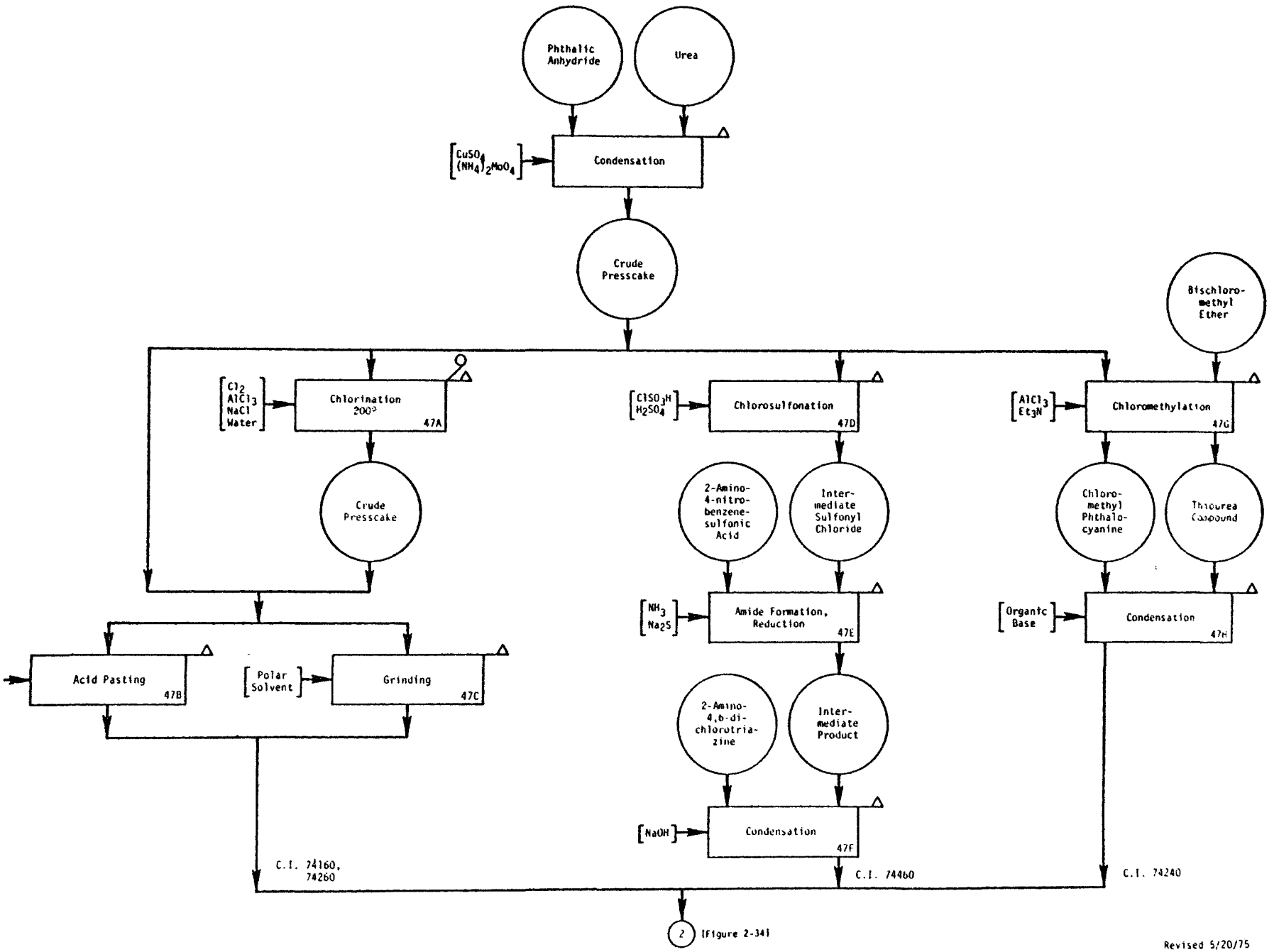

FIGURE 2-33. FLOW CHART FOR THE PRODUCTION OF SELECTED PHTHALOCYANINE DYES AND PIGMENTS FROM VARIOUS INTERMEDIATES

PHTHALOCYANINE DYES AND PIGMENTS (C.I. 74160, 74240, 74260, and 74460)

1. Function - The four phthalocyanine colors are all based on a unique primary intermediate, copper phthalocyanine, (C.I. 74160) which itself finds wide use as a high quality blue pigment. The chemical modification by chlorination, (47A) chlorosulfonation (47D) or chloromethylation (47G), gives rise to the other three colors. Chlorination of copper phthalocyanine is akin to the halogenation of dyes as practiced in Process No. 12. The chlorosulfonation process step is related to the sulfonation of dyes as described in Process No. 15. Steel equipment serves for making C.I. 74160 (47A) and carrying out the pigment finishing steps (47B and 47C). Steel equipment would also serve for the process steps (47D, E, F, G, and H) involved.

2. Input Materials - The starting materials needed to make the primary intermediate, C.I. 74160, are listed in Table 1.

TABLE 1. STARTING MATERIALS NEEDED TO MAKE C.I. 74160

phthalic anhydride
urea
copper sulfate
ammonium molybdate

The amounts required to make 100 pounds of the pigment are not available. In Table 2, the starting materials needed to convert C.I. 74160 to the other three colors are listed.

TABLE 2. STARTING MATERIALS FOR CONVERTING C.I. 74160 TO OTHER COLORS

C.I. 74240	C.I. 74260
bis-chloromethyl ether	chlorine
alkyl thiourea compound	aluminum chloride
aluminum chloride	sodium chloride
triethylamine	ferric chloride (or cupric chloride)

C.I. 74460
chlorosulfonic acid
sulfuric acid
2-amino-4-nitrobenzenesulfonic acid
sodium sulfide
2-amino-4-nitrobenzenesulfonic acid
ammonia

3. Operating Parameters - The condensation of phthalic anhydride with urea is carried out at a temperature in the vicinity of 160-200°C. The reaction is quite exothermic in the early stages. The chlorination of C.I. 74160 is done at 155-190° and the finished, hot melt of chlorinated pigment in the aluminum chloride-sodium chloride eutectic is quenched with cold water. The chlorosulfonation (47D) of C.I. 74160 is done at 30°, with 9 parts of chlorosulfonic acid for each part of C.I. 74160. Four sulfonyl chloride groups are introduced into each pigment molecule. No further information is available regarding the operating parameters involved in making these colors.

4. Utilities - Electricity, steam, water, and a hot liquid heat transfer system are needed. The amounts of utilities required are not known.

5. Waste Streams - The processing of phthalocyanine products results in relatively large amounts of waste sulfuric acid contaminated with small amounts of the bright blue pigment. Other steps in the process yield brines containing aluminum ion and small amounts of organic chemicals. The reduction step with sodium sulfide (47E) results in a waste stream of sodium thiosulfate which may be recovered economically.

6. EPA Classification Code -

7. References - Venkataraman, K., The Chemistry of Synthetic Dyes, Academic Press, New York (1952), Volume II, pp 1128-1133, 1135-1136, 1139.

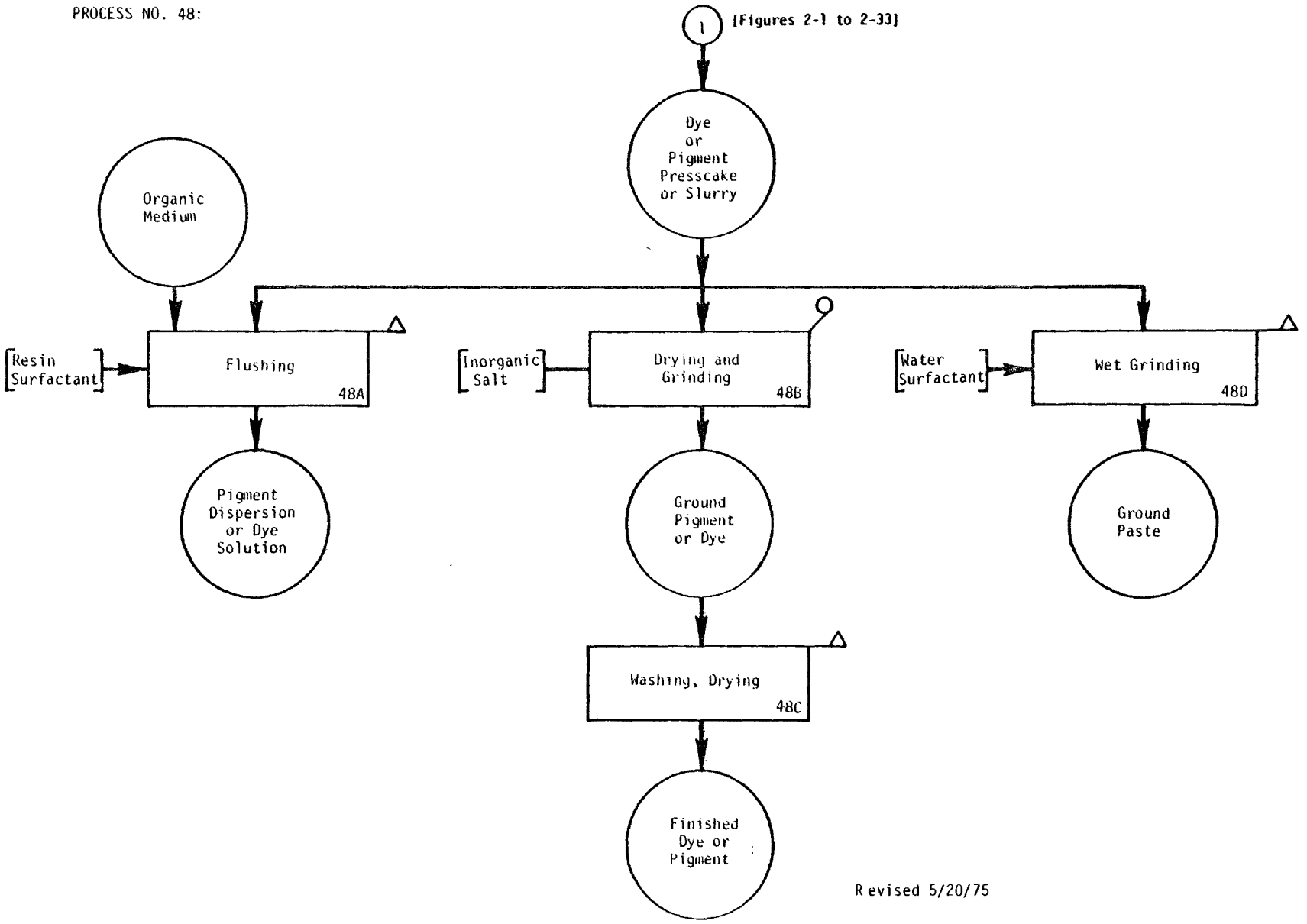

FIGURE 2-34. FLOW CHART FOR FINISHING STEPS FOR PIGMENT OR DYE PRODUCTION

FINISHING STEPS FOR PIGMENT OR DYE PRODUCTION

1. Function - The physical form of a dye or pigment plays an important part in the sale of the material. In the case of pigments, crystal size surface and shape have an enormous influence on the color quality and performance of a given pigment. These qualifications for a pigment can be greatly influenced by the finishing steps. Of special importance in the manufacture of pigments is the transfer of a pigment from a water borne phase to an oil borne phase. At least 67 percent of the total production of pigments is sold in this form. The equipment used in pigment flushing is simple but specifically designed for the purpose. Many pigments are flushed in the tank where they are made, using high speed stirrers. Others are flushed in powerful mixers designed with "sigma" blade agitators. Vacuum is often needed in this operation. Such mixers range in size from 2 to 1000 gallons. Drying and grinding of dyes and pigments are time-honored finishing steps for both dyes and pigments. This approach to finishing is being used less and less because of the inherent problems in the processing. Wet grinding is growing in favor, especially in connection with the growth in the use of water-based paints. Both ball and hammermills are used for the dry grinding of colors. Wet grinding is done only in ball mills. Dried dyes are often mixed with diluents and dispersants for purposes of standarization. Uniformity from batch to batch is, thus, achieved.

2. Input Materials - The data for a typical case are shown in Table 1 below. Surface active agents are sometimes needed.

TABLE 1. MATERIALS REQUIRED TO FLUSH 100 POUNDS OF C.I. 74160

C.I. 74160 press-cake, 29.7% solids

	Press-cake, pound	Organic Phase, pound	Pigment, pound	Water Introduced	Water Removed
First charge	16.84	42.93	50	118.4	104.4
Second charge	16.84	28.79	50	118.4	108.6
Vacuum stripping	--	113.47	--	--	21.2
Totals		185.19	100	236.8	234.2

Flushed pigment concentration = 35 percent
Moisture content = 0.9 percent

For the dry grinding of a dye or pigment, it is essential to mix the color with an inorganic, water soluble salt (sodium chloride, calcium chloride, or sodium sulfate) in an amount equal to 2 to 10 times the weight of the color.

3. Operating Parameters - The flushing operation can be carried out rapidly and conveniently. The temperatures employed are generally in the vicinity of 40 to 50°. Grinding is always done at ambient temperatures.

4. Utilities - The required utilities are vacuum, water, electricity, and steam. The amounts of these utilities needed are not known. However, the power requirements for flushing (as high as 500 hp) can be surprisingly large because of the heavy paste consistency of many finished pigment dispersions.

5. Waste Streams - The aqueous waste from the flushing of a pigment may contain varying amounts of organic materials. Dry grinding gives rise to considerable amounts of brines which may contain organic chemicals. Dry grinding also leads to much air pollution due to finely divided solids "flying about".
6. EPA Source Classification Code -
7. References - Fierz-David, H. E. and Blangey, L., Fundamental Processes of Dye Chemistry, Translated from the Fifth Austrian Edition by P. W. Vittum, Interscience Publishers, Inc., New York (1949), Chapter III-O, pp 377-378; Pigment Handbook, Edited by T. C. Patton, John Wiley and Sons, Inc., New York (1973), Volume III, "Pigment Flushing, III-F" (T. A. Langstroth), pp 447-455; "Improving the Physical Properties of Pigments, III-A-C" (W. Carr), pp 29-35.

APPENDIX A

RAW MATERIALS USED TO MANUFACTURE ORGANIC DYES, PIGMENTS AND THEIR INTERMEDIATES

TABLE A-1

RAW MATERIALS USED TO MANUFACTURE ORGANIC DYES, PIGMENTS AND THEIR INTERMEDIATES

Organic

acetic acid
acetic anhydride
acenaphthene
acetaldehyde
acetone
acrylonitrile
alkyl thioreas
m-aminobenzoic acid
p-aminobenzoic acid
sec-amylamine
di-t-amylphenol
aniline
anthranilic acid
antimony potassium tartrate
benzaldehyde
benzenesulfonic acid
benzoic acid
benzotrichloride
benzoyl chloride
benzenesulfonic acid
benzyl chloride
n-butyl alcohol
iso-butyl alcohol
n-butylamine
p-t-butylphenol
carbazole
cellulose waste
chloroacetic acid
chloranil
chlorobenzene
p-chlorobenzenesulfonic acid
p-chloronitrobenzene
o-chlorobenzoic acid
p-chlorobenzoic acid
m-chlorobenzoyl chloride
4-chloro-3-nitrobenzoic acid
o-chlorophenol
p-chlorophenol
o-chlorotoluene
p-chlorotoluene
p-chloro-α,α,α-trifluorotoluene (p-chlorobenzotrifluoride)
m-cresol
o-cresol
p-cresol
cyanuric chloride
cyclohexyl alcohol
cyclohexylamine
cyclohexanone
2,4-diaminotoluene
o-dichlorobenzene
p-dichlorobenzene
diethanolamine
diethylamine
diketene
dimethyl sulfate
dimethylamine
diphenylamine
p-dodecyl aniline
ethanol
ethanolamine

ethylamine
ethyl chloride
ethyl cyanoacetate
ethyl sodium oxalacetate
ethyl orthoformate
ethylamine
ethylene dibromide
ethylene glycol
ethylene oxide
formaldehyde (as formalin)
formamide
formic acid
glucose (corn sugar)
glycerol
glycine
hematin
hydrazine
hydroquinone
p-hydroxybenzoic acid
isophthalic acid
isopropyl amine
logwood extracts
mesitylene
methanesulfonic acid
methyl acetoacetate
methylamine
methyl isopropyl ketone
methyl mercaptan
methyl sulfate
methylene dianiline
α-methylstyrene
morpholine
naphthalene
1-naphthol
nitrobenzene
m-nitrobenzoic acid
p-nitrobenzoyl chloride
o-nitrophenol
p-nitrophenol
m-nitrotoluene
o-nitrotoluene
p-nitrotoluene
oxalic acid
o-phenetidine
p-phenetidine
phenol
1-phenol-3-sulfonic acid
1-phenol-4-sulfonic acid
N-phenylanthranilic acid
phthalic anhydride
iso-propylamine
pyrene
pyridine
quebracho extract
resorcinol
salicylic acid
sodium acetate
sodium formate
terephthalic acid
tetrachloroethane
tetrachlorophthalic anhydride
thiourea
toluene
o-toluenesulfonic acid

p-toluenesulfonic acid

p-toluenesulfonyl chloride

1,2,4-trichlorobenzene

trimellitic anhydride

urea

m-xylene

p-xylene

2,4-xylenol (2,4-dimethylphenol)

xylenes, mixed isomers

Inorganic

alumina hydrate
aluminum acetate
aluminum chloride
aluminum sulfate
ammonia
ammonium bisulfite
ammonium chloride
ammonium molybdate
barium chloride
boric acid
bromine
calcium carbonate (limestone)
calcium chloride
calcium oxide (lime)
carbon dioxide
chlorine
chlorosulfonic acid
chromium fluoride
chromium formate
chromium sulfate
cobalt acetate
copper (powder)
copper ferrocyanide
cuprous chloride
cupric chloride
cupric oxide
cupric sulfate
ferric chloride
ferrous sulfate
hydrochloric acid
iodine
iron (scrap)
lead carbonate (basic)
lead peroxide
magnesium oxide
manganese chloride
manganese dioxide
nickel acetate
Raney nickel catalyst
oleum
phosgene
phosphomolybdic acid
phosphorus oxychloride
phosphorus pentachloride
phosphorus trichloride
phosphotungstic acid
potassium carbonate (anhydrous)
potassium hydroxide
potassium permanganate
sodium bisulfite
sodium carbonate
sodium chlorate
sodium chloride
sodium cyanide
sodium dichromate
sodium hyposulfite
sodium hydroxide
sodium nitrite
sodium sulfide
sodium sulfite
sodium thiosulfate
stannous chloride

strontium chloride
sulfamic acid
sulfur
sulfur monochloride
sulfuric acid
sulfur chloride
sulfuryl chloride
thionyl chloride
zinc
zinc chloride

APPENDIX B

DYES AND PIGMENTS MANUFACTURED IN THE UNITED STATES IN 1973, LISTED IN NUMERICAL ORDER BY COLOR INDEX NUMBERS

TABLE B-1. DYES AND PIGMENTS BY COLOR INDEX NUMBER IN NUMERICAL ORDER

COLOR INDEX	DYE OR PIGMENT NAME
10005	MORDANT GREEN 4
10006	PIGMENT GREEN 8
10020	ACID GREEN 1
	D+C GREEN 8
10316	EXT. D+C YELLOW 7
	ACID YELLOW 1
10338	DISPERSE YELLOW 42
10345	DISPERSE YELLOW 1
10395	ACID BROWN 1
11000	SOLVENT YELLOW 1
	PIGMENT YELLOW 98
11005	DISPERSE ORANGE 3
11014	BASIC RED 30
11020	SOLVENT YELLOW 2
11021	SOLVENT YELLOW 56
11043	BASIC VIOLET 18
11052	BASIC BLUE 54
11085	BASIC RED 18
11100	DISPERSE ORANGE 5
11110	DISPERSE RED 1
11115	DISPERSE RED 13
11150	DISPERSE RED 7
11152	DISPERSE BROWN 1
11154	BASIC BLUE 41
11160	SOLVENT YELLOW 3
11210	DISPERSE RED 17
11215	DISPERSE RED 5
11250	DISPERSE RED 31
11255	DISPERSE BLACK 2
11270	BASIC ORANGE 2
	SOLVENT ORANGE 3
11290	MORDANT BROWN 12
11320	BASIC ORANGE 1
11365	DISPERSE BLACK 1
11450	BASIC YELLOW 25
11460	BASIC RED 29
11480	BASIC YELLOW 24
11660	PIGMENT YELLOW 5
11665	PIGMENT YELLOW 4
11670	PIGMENT YELLOW 6
11680	PIGMENT YELLOW 1
11710	PIGMENT YELLOW 3
11720	PIGMENT YELLOW 9
11725	PIGMENT ORANGE 1
11738	PIGMENT YELLOW 73
11740	PIGMENT YELLOW 65
11741	PIGMENT YELLOW 74
11765	PIGMENT YELLOW 49
11767	PIGMENT YELLOW 97
11770	PIGMENT YELLOW 75

COLOR INDEX	DYE OR PIGMENT NAME
11855	DISPERSE YELLOW 3
11920	SOLVENT ORANGE 1
12055	SOLVENT YELLOW 14
12060	PIGMENT ORANGE 2
12070	LIGHT PIGMENT RED 1
	DARK PIGMENT RED 1
12071	PIGMENT BROWN 2
12075	PIGMENT ORANGE 5
	D+C ORANGE 17
12085	D+C RED 36
	PIGMENT RED 4
12090	PIGMENT RED 6
12100	SOLVENT ORANGE 2
12120	PIGMENT RED 3
12140	SOLVENT ORANGE 7
12150	SOLVENT RED 1
12170	PIGMENT RED 40
12200	MORDANT BLACK 19
12210	BASIC BLUE 16
12245	DIRECT RED 76
12310	PIGMENT RED 2
12315	PIGMENT RED 22
12350	PIGMENT RED 18
12355	PIGMENT RED 23
12360	PIGMENT RED 31
12370	SODIUM PIGMENT RED 112
	PIGMENT RED 112
12380	PIGMENT RED 14
12390	PIGMENT RED 17
12395	PIGMENT RED 13
12420	PIGMENT RED 7
12440	PIGMENT RED 10
12460	PIGMENT RED 9
12465	PIGMENT RED 15
12480	PIGMENT BROWN 1
12485	PIGMENT RED 146
12490	PIGMENT RED 5
12515	PIGMENT RED 176
12590	DISPERSE YELLOW 8
12710	PIGMENT YELLOW 10
12715	SOLVENT RED 8
12775	PIGMENT GREEN 10
12790	DISPERSE YELLOW 5
13010	ACID DYE 0
13025	ACID ORANGE 52
13058	D+C RED 39
13065	EXT. D+C YELLOW 1
	ACID YELLOW 36
13080	ACID ORANGE 5
13090	ACID ORANGE 1

COLOR INDEX	DYE OR PIGMENT NAME
13091	ACID ORANGE 1
13095	ACID YELLOW 63
13150	ACID ORANGE 50
13225	MORDANT BROWN 13
13250	MORDANT BROWN 33
13265	MORDANT BROWN 49
13360	MORDANT DYE 0
13361	ACID GREEN 35
13390	ACID BLUE 92
13425	ACID GREEN 12
13900	ACID YELLOW 99
	SOLVENT YELLOW 19
13906	ACID YELLOW 151
13920	DIRECT YELLOW 8
13950	DIRECT YELLOW 27
14025	MORDANT YELLOW 1
14030	MORDANT ORANGE 1
14055	MORDANT YELLOW 14
14110	MORDANT YELLOW 20
14130	MORDANT YELLOW 5
14135	MORDANT YELLOW 36
14155	DIRECT GREEN 28
14170	ACID YELLOW 65
14250	MORDANT BROWN 19
14270	ACID ORANGE 6
14625	ACID BROWN 6
14640	MORDANT BLACK 3
14645	MORDANT BLACK 11
14700	FD+C RED 4
14710	ACID RED 4
14720	ACID RED 14
14830	CALCIUM PIGMENT RED 54
14855	MORDANT BLUE 9
14870	MORDANT BROWN 15
14890	ACID BLUE 158
15050	ACID BLUE 158
15075	DIRECT RED 20
15510	ACID ORANGE 7
	LAKE PIGMENT ORANGE 17
	D+C ORANGE 4
15530	LAKE PIGMENT ORANGE 7
15575	ACID ORANGE 8
	PIGMENT ACID ORANGE 8
15585	SODIUM PIGMENT RED 53
	BARIUM PIGMENT RED 53
	D+C RED 9
	D+C RED 8
15620	ACID RED 88
15630	D+C RED 10
	D+C RED 13

TABLE B-1. DYES AND PIGMENTS BY COLOR INDEX NUMBER IN NUMERICAL ORDER (CONTINUED)

COLOR INDEX	DYE OR PIGMENT NAME
	D+C RED 12
	D+C RED 11
	SODIUM PIGMENT RED 49
	CALCIUM PIGMENT RED 49
	BARIUM PIGMENT RED 49
15670	MORDANT VIOLET 5
15705	MORDANT BLACK 17
15710	MORDANT BLACK 1
15711	ACID BLACK 52
15800	PIGMENT BROWN 5
	D+C RED 31
	PIGMENT RED 64
15820	PIGMENT RED 55
15825	PIGMENT RED 58
15826	PIGMENT RED 77
15850	CALCIUM PIGMENT RED 57
	D+C RED 7
	D+C RED 6
15860	PIGMENT RED 52
15865	PIGMENT RED 48
15880	PIGMENT RED 63
	D+C RED 34
15970	ACID ORANGE 12
15985	D+C YELLOW 6
	FD+C YELLOW 6
15995	ACID ORANGE 31
16055	ACID VIOLET 56
16105	LAKE PIGMENT RED 60
	MORDANT RED 9
16150	LAKE ACID RED 26
	ACID RED 26
16180	ACID RED 17
	LAKE ACID RED 17
16185	ACID RED 27
	FD+C RED 2
	D+C RED 2
16230	ACID ORANGE 10
16255	ACID YELLOW 18
16260	ACID VIOLET 58
	SOLVENT RED 35
16500	MORDANT BLACK 9
16575	ACID RED 176
16580	ACID VIOLET 3
16600	ACID VIOLET 6
17025	ACID VIOLET 1
17045	ACID RED 37
17065	ACID RED 32
17200	ACID RED 33
	D+C RED 33
17235	MORDANT GREEN 36

COLOR INDEX	DYE OR PIGMENT NAME
17590	MORDANT BROWN 40
17755	ACID RED 137
17757	REACTIVE ORANGE 16
17820	DIRECT RED 123
17908	REACTIVE RED 8
17916	REACTIVE BLACK 1
17995	ACID RED 133
18050	ACID RED 1
18055	ACID VIOLET 7
18065	ACID RED 35
18073	ACID RED 138
18075	ACID VIOLET 12
18096	REACTIVE VIOLET 4
18097	REACTIVE VIOLET 5
18105	REACTIVE RED 4
18110	ACID RED 106
18158	REACTIVE RED 1
18159	REACTIVE RED 3
18160	MORDANT BLACK 38
18165	ACID BLACK 60
18690	ACID YELLOW 121
18695	ACID YELLOW 4
18710	MORDANT YELLOW 30
18732	ACID ORANGE 60
18740	ACID ORANGE 72
18745	ACID ORANGE 74
	SOLVENT ORANGE 5
18760	MORDANT RED 7
18761	ACID RED 201
18800	ACID RED 183
18810	ACID RED 186
18820	ACID YELLOW 11
18821	MORDANT YELLOW 8
18835	ACID YELLOW 25
18850	ACID YELLOW 76
18870	ACID ORANGE 76
18890	ACID YELLOW 34
18900	ACID YELLOW 29
18940	MORDANT ORANGE 4
18950	ACID YELLOW 40
18960	ACID YELLOW 14
18965	ACID YELLOW 17
18990	REACTIVE YELLOW 13
19010	ACID YELLOW 54
19140	ACID YELLOW 23
	LAKE ACID YELLOW 23
	D+C YELLOW 51
	FD+C YELLOW 5
19350	MORDANT DYE 1
19351	ACID RED 179

COLOR INDEX	DYE OR PIGMENT NAME
19540	DIRECT YELLOW 9
19555	DIRECT YELLOW 28
19556	DIRECT YELLOW 29
19600	MORDANT BROWN 21
20040	PIGMENT YELLOW 16
20110	MORDANT BROWN 1
20150	MORDANT BROWN 18
20170	ACID ORANGE 24
20195	PIGMENT ACID BROWN 14
	ACID BROWN 14
20440	ACID GREEN 19
20460	ACID BLUE 29
20470	ACID BLACK 1
20480	ACID BLACK 41
20495	ACID GREEN 20
20505	REACTIVE BLACK 5
21000	BASIC BROWN 1
21010	BASIC BROWN 4
	PIGMENT BROWN 3
	SOLVENT BROWN 12
21030	BASIC BROWN 2
21090	PIGMENT YELLOW 12
21095	PIGMENT YELLOW 14
21096	PIGMENT YELLOW 55
21100	PIGMENT YELLOW 13
21105	PIGMENT YELLOW 17
21108	PIGMENT YELLOW 83
21110	PIGMENT ORANGE 13
21115	PIGMENT ORANGE 34
21120	PIGMENT RED 38
21130	PIGMENT ORANGE 15
21150	PIGMENT ORANGE 16
21165	PIGMENT ORANGE 14
21180	PIGMENT BLUE 25
21200	PIGMENT RED 41
21230	SOLVENT YELLOW 29
21240	SOLVENT YELLOW 30
21250	SOLVENT RED 22
22120	DIRECT RED 28
22130	DIRECT ORANGE 8
22140	DIRECT ORANGE 8
22145	DIRECT RED 10
22155	DIRECT RED 13
22165	DIRECT DYE 0
22195	ACID ORANGE 45
22240	DIRECT RED 37
22245	ACID RED 85
22310	DIRECT RED 1
22311	DIRECT BROWN 2
22345	DIRECT BROWN 59

TABLE B-1. DYES AND PIGMENTS BY COLOR INDEX NUMBER IN NUMERICAL ORDER (CONTINUED)

COLOR INDEX	DYE OR PIGMENT NAME
22370	DIRECT ORANGE 1
22375	DIRECT ORANGE 1
22410	DIRECT YELLOW 20
22430	DIRECT ORANGE 1
22460	DIRECT VIOLET 27
22480	DIRECT VIOLET 22
22570	DIRECT VIOLET 1
22590	DIRECT BLUE 2
22870	ACID ORANGE 63
22880	MORDANT YELLOW 26
22890	ACID RED 97
22895	ACID ORANGE 56
22910	ACID YELLOW 42
23050	DIRECT RED 46
23155	DIRECT BLUE 98
23266	ACID RED 111
23285	ACID RED 99
23365	DIRECT ORANGE 6
23370	DIRECT ORANGE 10
23375	DIRECT ORANGE 6
23500	DIRECT RED 2
23630	DIRECT RED 39
23635	ACID RED 114
23790	DIRECT BLUE 25
23850	DIRECT BLUE 14
23900	ACID YELLOW 44
23910	ACID RED 89
24065	DIRECT BLUE 136
24100	DIRECT RED 7
24125	ACID RED 128
24140	DIRECT BLUE 8
24175	DIRECT BLUE 151
24280	DIRECT BLUE 22
24400	DIRECT BLUE 15
24401	DIRECT BLUE 218
24410	DIRECT BLUE 1
24411	DIRECT BLUE 76
24810	ACID RED 134
24890	DIRECT YELLOW 4
24895	DIRECT YELLOW 12
25040	DIRECT BLACK 71
25100	MORDANT YELLOW 16
25135	ACID YELLOW 38
25200	DIRECT ORANGE 73
25275	DIRECT RED 120
25300	DIRECT YELLOW 26
25380	DIRECT RED 75
25400	DIRECT VIOLET 62
25410	DIRECT VIOLET 47
26070	DISPERSE YELLOW 23

COLOR INDEX	DYE OR PIGMENT NAME
26100	D+C RED 17
26105	SOLVENT RED 24
26120	SOLVENT RED 26
26125	SOLVENT RED 27
26150	SOLVENT BLACK 3
26207	ACID RED 350
26360	ACID BLUE 113
26370	ACID BLACK 24
26400	ACID BLUE 120
26410	ACID BLUE 118
26520	MORDANT ORANGE 6
26550	ACID ORANGE 51
26900	ACID RED 151
26905	ACID RED 66
27070	ACID BLACK 26
27075	ACID BLACK 26
27200	ACID RED 115
27201	ACID RED 115
27290	ACID RED 73
27680	DIRECT RED 16
27700	DIRECT BLACK 17
27720	DIRECT BLACK 51
27855	DIRECT VIOLET 7
27885	DIRECT VIOLET 9
27905	DIRECT VIOLET 51
27925	DIRECT BLUE 67
28160	DIRECT RED 81
	PIGMENT DIRECT RED 81
28210	DIRECT RED 153
28215	DIRECT RED 127
28230	DIRECT RED 117
28240	DIRECT BLACK 127
28255	DIRECT ORANGE 74
28280	DIRECT GREEN 38
28360	DIRECT RED 152
29000	DIRECT YELLOW 44
29005	DIRECT YELLOW 41
29025	DIRECT YELLOW 50
29060	DIRECT YELLOW 34
29065	DIRECT RED 79
29090	DIRECT ORANGE 83
29100	DIRECT RED 31
29105	DIRECT VIOLET 14
29110	DIRECT RED 149
29120	DIRECT VIOLET 66
29125	DIRECT VIOLET 48
29150	DIRECT ORANGE 26
29155	DIRECT ORANGE 29
29156	DIRECT ORANGE 102
29160	DIRECT RED 23

COLOR INDEX	DYE OR PIGMENT NAME
29165	DIRECT RED 4
29166	DIRECT BROWN 112
29175	DIRECT RED 62
29180	DIRECT RED 73
29185	DIRECT RED 24
29190	DIRECT RED 26
29200	DIRECT RED 72
29210	DIRECT RED 122
29225	DIRECT RED 83
30015	DIRECT BLACK 78
30045	DIRECT BROWN 1
30120	DIRECT BROWN 154
30140	DIRECT BROWN 6
30145	DIRECT BROWN 95
30220	DIRECT GREEN 39
30235	DIRECT BLACK 38
30245	DIRECT BLACK 4
30280	DIRECT GREEN 1
30295	DIRECT GREEN 6
30315	DIRECT GREEN 8
31560	DIRECT BLACK 9
31565	DIRECT BLACK 9
31575	DIRECT BLACK 2
31600	DIRECT BLACK 80
31665	DIRECT BLACK 36
31930	DIRECT BLUE 26
34010	DIRECT BLUE 126
34015	DIRECT BROWN 32
34045	DIRECT GREEN 26
34085	DIRECT BLUE 120
34090	DIRECT BLUE 120
34140	DIRECT BLUE 71
34146	DIRECT BLUE 74
34170	DIRECT BLACK 56
34200	DIRECT BLUE 78
34215	DIRECT BLUE 81
34220	DIRECT BLUE 75
34260	DIRECT GREEN 51
35005	DIRECT BROWN 44
35255	DIRECT BLACK 19
35435	DIRECT BLACK 22
35660	DIRECT BROWN 31
35760	DIRECT RED 84
35780	DIRECT RED 80
35790	DIRECT RED 32
35870	DIRECT BLACK 75
36200	DIRECT BROWN 106
36300	DIRECT BROWN 74
37000	BASE AZOIC DIAZOIC 44
	SALT AZOIC DIAZOIC 44

TABLE B-1. DYES AND PIGMENTS BY COLOR INDEX NUMBER IN NUMERICAL ORDER (CONTINUED)

COLOR INDEX	DYE OR PIGMENT NAME
37005	SALT AZOIC DIAZOIC 2
	BASE AZOIC DIAZOIC 2
37010	BASE AZOIC DIAZOIC 3
	SALT AZOIC DIAZOIC 3
	AZOIC BROWN 3
	AZOIC ORANGE 3
37025	SALT AZOIC DIAZOIC 5
37035	SALT AZOIC DIAZOIC 37
37040	SALT AZOIC DIAZOIC 9
37050	AZOIC ORANGE 10
	SALT AZOIC DIAZOIC 49
37080	BASE AZOIC DIAZOIC 46
37085	BASE AZOIC DIAZOIC 11
	SALT AZOIC DIAZOIC 11
37090	SALT AZOIC DIAZOIC 32
	BASE AZOIC DIAZOIC 32
	AZOIC RED 1
	AZOIC YELLOW 3
	AZOIC RED 5
	AZOIC YELLOW 1
37100	AZOIC RED 16
	BASE AZOIC DIAZOIC 34
	SALT AZOIC DIAZOIC 34
37105	SALT AZOIC DIAZOIC 12
	BASE AZOIC DIAZOIC 12
37107	AZOIC COUPLING 107
37110	BASE AZOIC DIAZOIC 8
	SALT AZOIC DIAZOIC 8
37120	SALT AZOIC DIAZOIC 10
	BASE AZOIC DIAZOIC 10
	AZOIC BROWN 10
	AZOIC RED 2
	AZOIC BROWN 7
	AZOIC YELLOW 2
37125	BASE AZOIC DIAZOIC 5
	SALT AZOIC DIAZOIC 5
37130	BASE AZOIC DIAZOIC 13
	SALT AZOIC DIAZOIC 13
37135	SALT AZOIC DIAZOIC 1
37150	AZOIC RED 12
	SALT AZOIC DIAZOIC 42
37151	SALT AZOIC DIAZOIC 14
	SALT AZOIC DIAZOIC 28
	BASE AZOIC DIAZOIC 14
	BASE AZOIC DIAZOIC 28
37155	AZOIC DIAZOIC 24
	AZOIC BLUE 7
37165	AZOIC VIOLET 1
	SALT AZOIC DIAZOIC 41
37175	SALT AZOIC DIAZOIC 20

COLOR INDEX	DYE OR PIGMENT NAME
	AZOIC BLUE 6
	AZOIC GREEN 1
37185	AZOIC DIAZOIC 0
	DISPERSE BLACK 2
37210	BASE AZOIC DIAZOIC 4
37235	BASE AZOIC DIAZOIC 48
	SALT AZOIC DIAZOIC 48
	DISPERSE BLACK 6
37255	SALT AZOIC DIAZOIC 35
37275	SALT AZOIC DIAZOIC 36
37505	AZOIC COUPLING 2
	AZOIC BLUE 7
	AZOIC BLUE 6
	AZOIC VIOLET 1
	AZOIC ORANGE 10
37510	AZOIC COUPLING 10
37515	AZOIC COUPLING 17
37520	AZOIC COUPLING 18
	AZOIC RED 16
	AZOIC RED 6
37525	AZOIC COUPLING 8
37526	AZOIC COUPLING 21
37527	AZOIC COUPLING 29
37530	AZOIC COUPLING 20
	AZOIC RED 2
37531	AZOIC COUPLING 34
37535	AZOIC COUPLING 11
37540	AZOIC COUPLING 24
37545	AZOIC COUPLING 19
37550	AZOIC COUPLING 12
	AZOIC RED 12
	AZOIC BROWN 10
37558	AZOIC RED 1
	AZOIC ORANGE 3
	AZOIC YELLOW 3
	AZOIC COUPLING 14
37560	AZOIC COUPLING 4
37565	AZOIC COUPLING 7
37575	AZOIC COUPLING 3
37585	AZOIC COUPLING 36
	AZOIC GREEN 1
37595	AZOIC COUPLING 13
37600	AZOIC COUPLING 15
	AZOIC BROWN 3
	AZOIC BROWN 7
37605	AZOIC COUPLING 16
37610	AZOIC COUPLING 5
	AZOIC YELLOW 3
	AZOIC YELLOW 2
	AZOIC YELLOW 1

COLOR INDEX	DYE OR PIGMENT NAME
37615	AZOIC COUPLING 35
40000	DIRECT YELLOW 11
	PIGMENT DIRECT YELLOW 11
40001	PIGMENT DIRECT YELLOW 6
	DIRECT YELLOW 6
40002	DIRECT ORANGE 15
40003	DIRECT ORANGE 15
40045	DIRECT YELLOW 21
40210	DIRECT ORANGE 61
40215	DIRECT ORANGE 39
	DIRECT ORANGE 34
40220	DIRECT ORANGE 34
40260	DIRECT ORANGE 37
40265	DIRECT ORANGE 37
40290	DIRECT RED 111
40300	DIRECT YELLOW 106
40600	FLUORESCENT BRIGHTENER 30
40621	FLUORESCENT BRIGHTENER 9
40622	FLUORESCENT BRIGHTENER 28
40630	FLUORESCENT BRIGHTENER 1
40645	FLUORESCENT BRIGHTENER 46
41000	BASIC YELLOW 2
	PIGMENT BASIC YELLOW 2
	SOLVENT YELLOW 34
41001	PIGMENT BASIC YELLOW 37
	BASIC YELLOW 37
42000	BASIC GREEN 4
	PTA PIGMENT GREEN 4
	PMA PIGMENT GREEN 4
	FUGITIVE PIGMENT GREEN 4
	SOLVENT GREEN 1
42025	PIGMENT SULFUR BRIGHTENER 2
	PIGMENT BASIC BLUE 1
	PTA PIGMENT BLUE 9
	PMA PIGMENT BLUE 9
	BASIC BLUE 2
	BASIC BLUE 1
42040	BASIC GREEN 1
	PTA PIGMENT GREEN 1
	PMA PIGMENT GREEN 1
	PTA PIGMENT GREEN 2
	PMA PIGMENT GREEN 2
42045	ACID BLUE 1
42053	FD+C GREEN 3
42080	ACID BLUE 7
42085	ACID GREEN 3
42090	ACID BLUE 9
	LAKE PIGMENT BLUE 24
	FD+C BLUE 1
	D+C BLUE 1

TABLE B-1. DYES AND PIGMENTS BY COLOR INDEX NUMBER IN NUMERICAL ORDER (CONTINUED)

COLOR INDEX	DYE OR PIGMENT NAME
42095	ACID GREEN 5
42100	ACID GREEN 9
42140	BASIC BLUE 5
42170	ACID GREEN 22
	PTA PIGMENT VIOLET 1
42500	BASIC RED 9
42510	BASIC VIOLET 14
	PMA PIGMENT VIOLET 9
	SOLVENT RED 41
42520	PIGMENT BASIC VIOLET 2
	BASIC VIOLET 2
42535	BASIC VIOLET 1
	FUGITIVE PIGMENT VIOLET 3
	PTA PIGMENT VIOLET 3
	PMA PIGMENT VIOLET 3
	SOLVENT VIOLET 8
42536	BASIC VIOLET 13
42555	BASIC VIOLET 3
	SOLVENT VIOLET 9
42561	ACID BLUE 34
42595	BASIC BLUE 7
	SOLVENT BLUE 5
	PTA PIGMENT BLUE 1
	PMA PIGMENT BLUE 1
42600	PTA PIGMENT BLUE 14
	PMA PIGMENT BLUE 14
	BASIC VIOLET 4
42640	ACID VIOLET 49
	FD+C VIOLET 1
42645	ACID BLUE 15
42650	ACID VIOLET 17
42655	ACID BLUE 90
42660	ACID BLUE 83
42735	ACID BLUE 104
	LAKE ACID BLUE 104
42750	PIGMENT BLUE 19
42760	SOLVENT BLUE 23
42775	SOLVENT BLUE 3
42780	LAKE ACID BLUE 93
	ACID BLUE 93
43820	MORDANT BLUE 3
43830	MORDANT BLUE 1
44025	ACID GREEN 16
44040	BASIC BLUE 11
	SOLVENT BLUE 6
	PTA PIGMENT BLUE 10
	PMA PIGMENT BLUE 10
44045	PTA PIGMENT BLUE 2
	PMA PIGMENT BLUE 2
	SOLVENT BLUE 4

COLOR INDEX	DYE OR PIGMENT NAME
	BASIC BLUE 26
44090	ACID GREEN 50
45100	ACID RED 52
45160	LAKE PIGMENT RED 81
	BASIC RED 1
	PTA PIGMENT RED 81
	PMA PIGMENT RED 81
	FUGITIVE PIGMENT RED 81
45170	PMA PIGMENT VIOLET 1
	FUGITIVE PIGMENT VIOLET 1
	SOLVENT RED 49
	SOLVENT RED 35
	D+C RED 37
	D+C RED 19
	BASIC VIOLET 10
45175	BASIC VIOLET 11
45180	MORDANT RED 27
45350	D+C YELLOW 7
	D+C YELLOW 8
	ACID YELLOW 73
45370	D+C ORANGE 5
45380	D+C RED 21
	D+C RED 22
	PIGMENT RED 90
	ACID RED 87
45410	D+C RED 27
	D+C RED 28
45425	D+C ORANGE 10
45430	D+C RED 3
	FD+C RED 3
46005	BASIC ORANGE 14
46500	PIGMENT VIOLET 19
47000	D+C YELLOW 11
	SOLVENT YELLOW 33
47005	D+C YELLOW 10
	ACID YELLOW 3
47020	DISPERSE YELLOW 54
47023	DISPERSE YELLOW 64
47035	DIRECT YELLOW 5
48000	DISPERSE YELLOW 31
48013	BASIC VIOLET 16
48015	BASIC RED 13
48020	BASIC VIOLET 7
48035	BASIC ORANGE 21
48040	BASIC ORANGE 22
48055	BASIC YELLOW 11
48070	BASIC RED 12
48100	BASIC YELLOW 23
49000	DIRECT YELLOW 59
49005	BASIC YELLOW 1

COLOR INDEX	DYE OR PIGMENT NAME
	PMA PIGMENT GREEN 2
	PTA PIGMENT GREEN 2
49010	DIRECT YELLOW 7
50204	BASIC BRIGHTENER 0
50240	BASIC RED 2
50400	SOLVENT BLUE 7
50405	ACID BLUE 20
50415	SOLVENT BLACK 5
	SOLVENT BLACK 7
50420	ACID BLACK 2
51004	BASIC BLUE 4
	BASIC BLUE 3
51175	BASIC BLUE 6
51300	DIRECT BLUE 106
51319	PIGMENT VIOLET 23
51320	DIRECT BLUE 108
52015	BASIC BLUE 9
53000	LEUCO SULFUR BROWN 1
53001	SOLUBILIZED SULFUR BROWN 1
53010	LEUCO SULFUR YELLOW 9
53040	LEUCO SULFUR YELLOW 1
53050	SULFUR ORANGE 1
53055	SULFUR BROWN 10
	LEUCO SULFUR BROWN 10
53056	SOLUBILIZED SULFUR BROWN 10
53090	LEUCO SULFUR BROWN 26
	SULFUR BROWN 26
53120	LEUCO SULFUR YELLOW 2
53160	SULFUR YELLOW 4
	LEUCO SULFUR YELLOW 4
53185	LEUCO SULFUR BLACK 1
	SULFUR BLACK 1
53186	SOLUBILIZED SULFUR BLACK 1
53190	LEUCO SULFUR BLACK 10
53195	SULFUR BLACK 2
	LEUCO SULFUR BLACK 2
53196	SOLUBILIZED SULFUR BLACK 2
53205	SULFUR BLACK 5
53228	LEUCO SULFUR RED 10
53235	SULFUR BLUE 5
	LEUCO SULFUR BLUE 1
53246	LEUCO SULFUR BROWN 14
	SULFUR BROWN 14
53290	LEUCO SULFUR BLACK 11
	LEUCO SULFUR BLACK 11
53320	SULFUR BROWN 52
53325	SULFUR BROWN 60
53430	SULFUR BLUE 9
53440	SULFUR BLUE 7
	LEUCO SULFUR BLUE 7

TABLE B-1. DYES AND PIGMENTS BY COLOR INDEX NUMBER IN NUMERICAL ORDER (CONTINUED)

COLOR INDEX	DYE OR PIGMENT NAME
53441	SOLUBILIZED SULFUR BLUE 7
53450	LEUCO SULFUR BLUE 13
53570	LEUCO SULFUR GREEN 3
53571	LEUCO SULFUR GREEN 2
	SULFUR GREEN 2
53630	VAT BLUE 43
53680	LEUCO SULFUR BROWN 20
53720	SULFUR RED 6
53721	SULFUR BROWN 12
53830	LEUCO SULFUR RED 5
	SULFUR RED 5
58000	MORDANT RED 11
	LAKE PIGMENT RED 83
58005	MORDANT RED 3
58055	PTA PIGMENT BLUE 7
	PMA PIGMENT BLUE 7
	LAKE PIGMENT VIOLET 5
59040	EXT. D+C GREEN 1
59100	VAT YELLOW 4
59101	SOLUBILIZED VAT YELLOW 4
59105	VAT ORANGE 1
59106	SOLUBILIZED VAT ORANGE 1
59300	VAT ORANGE 3
	PIGMENT RED 168
	PIGMENT VAT ORANGE 3
59700	VAT ORANGE 9
59705	VAT ORANGE 2
59710	VAT ORANGE 4
	PIGMENT VAT ORANGE 4
59800	VAT BLUE 20
59815	VAT BLUE 18
59825	VAT GREEN 1
59826	SOLUBILIZED VAT GREEN 1
59850	VAT GREEN 9
60000	VAT VIOLET 10
60005	VAT VIOLET 9
60010	VAT VIOLET 1
	PIGMENT VIOLET 31
60015	VAT BLUE 25
60505	SOLVENT RED 111
	DISPERSE RED 9
60710	DISPERSE RED 15
60725	DISPERSE BLUE 72
	SOLVENT VIOLET 13
	D+C VIOLET 2
60730	ACID VIOLET 43
60755	DISPERSE RED 4
60756	DISPERSE RED 60
60767	DISPERSE BLUE 27
61100	DISPERSE VIOLET 1
61102	DISPERSE VIOLET 28
61105	DISPERSE VIOLET 4
61115	DISPERSE BLUE 9
61125	ACID BLUE 23
61135	ACID BLUE 127
61200	REACTIVE BLUE 19
	SOLVENT BLUE 12
61205	REACTIVE BLUE 5
	REACTIVE BLUE 4
61211	REACTIVE BLUE 2
61500	DISPERSE BLUE 14
61505	DISPERSE BLUE 3
61525	SOLVENT BLUE 11
61530	ACID BLUE 27
61551	SOLVENT BLUE 36
61552	SOLVENT BLUE 59
61555	SOLVENT BLUE 14
61565	SOLVENT GREEN 3
	D+C GREEN 6
61570	D+C GREEN 5
	ACID GREEN 25
61585	ACID BLUE 80
61705	SOLVENT VIOLET 14
61710	ACID VIOLET 34
61725	VAT YELLOW 3
61800	ACID VIOLET 34
62015	DISPERSE RED 11
62020	ACID VIOLET 41
62025	DISPERSE VIOLET 26
62030	DISPERSE VIOLET 8
62045	ACID BLUE 62
62055	ACID BLUE 25
62070	ACID BLUE 145
62073	ACID BLUE 230
62080	SOLVENT BLUE 13
62085	ACID BLUE 47
62105	ACID BLUE 78
62125	ACID BLUE 40
62130	ACID BLUE 41
62500	DISPERSE BLUE 7
62560	ACID GREEN 41
63000	ACID BLUE 43
63005	SOLVENT BLUE 74
63010	ACID BLUE 45
63285	DISPERSE BLUE 56
63365	VAT VIOLET 17
63615	MORDANT BLACK 13
64500	DISPERSE BLUE 1
64515	ACID BLUE 81
65005	ACID BLACK 48
65049	PIGMENT YELLOW 123
65230	VAT BLACK 9
65430	SOLUBILIZED VAT YELLOW 10
67000	VAT RED 10
67300	VAT YELLOW 2
67895	VAT VIOLET 14
68210	SOLVENT RED 52
68215	ACID RED 80
68420	PIGMENT YELLOW 108
68700	VAT VIOLET 13
69005	VAT BLACK 27
69015	VAT BROWN 3
	PIGMENT BROWN 28
69025	VAT ORANGE 15
69500	VAT GREEN 3
69501	SOLUBILIZED VAT GREEN 3
69525	VAT BLACK 25
69705	VAT YELLOW 21
69800	VAT BLUE 4
69805	ACID DYE 0
69810	VAT BLUE 14
	PIGMENT BLUE 22
69815	VAT BLUE 11
69825	VAT BLUE 6
	PIGMENT BLUE 64
69826	SOLUBILIZED VAT BLUE 6
69840	VAT BLUE 12
70315	VAT DYE 0
70320	VAT RED 13
70507	VAT BLUE 67
70600	VAT YELLOW 1
	PIGMENT YELLOW 24
70800	VAT BROWN 1
70801	SOLUBILIZED VAT BROWN 1
70805	VAT ORANGE 11
71050	VAT GREEN 8
71100	VAT RED 15
	PIGMENT VAT RED 15
71105	PIGMENT VAT ORANGE 7
	PIGMENT ORANGE 43
	VAT ORANGE 7
71110	VAT RED 14
71129	PIGMENT BROWN 26
71130	VAT RED 23
	PIGMENT RED 179
71135	VAT RED 32
71137	PIGMENT RED 149
71140	PIGMENT RED 190
	VAT RED 29
71145	PIGMENT RED 123

TABLE B-1. DYES AND PIGMENTS BY COLOR INDEX NUMBER IN NUMERICAL ORDER (CONTINUED)

COLOR INDEX	DYE OR PIGMENT NAME	COLOR INDEX	DYE OR PIGMENT NAME	COLOR INDEX	DYE OR PIGMENT NAME
71200	VAT BLUE 16	NONE	PIGMENT VIOLET 74	NONE	FLUORESCENT BRIGHTENER 158
71205	VAT BLUE 53	NONE	PMA PIGMENT RED 79	NONE	FD+C RED 40
73000	VAT BLUE 1	NONE	PIGMENT ORANGE 38	NONE	SOLVENT RED 68
	D+C BLUE 6	NONE	PIGMENT YELLOW 85	NONE	SOLVENT RED 33
73015	FD+C BLUE 2	NONE	VAT BLUE 39	NONE	SOLVENT RED 40
	ACID BLUE 74	NONE	VAT BLUE 60	NONE	SOLVENT ORANGE 51
73065	VAT BLUE 5	NONE	VAT BROWN 11	NONE	SOLVENT ORANGE 48
73300	VAT RED 41	NONE	VAT GREEN 32	NONE	SOLVENT ORANGE 20
73310	PIGMENT RED 87	NONE	VAT GREEN 20	NONE	SOLVENT ORANGE 31
73312	PIGMENT RED 88	NONE	VAT BROWN 57	NONE	SOLVENT ORANGE 25
73335	VAT ORANGE 5	NONE	VAT BROWN 40	NONE	SOLVENT ORANGE 24
73336	SOLUBILIZED VAT ORANGE 5	NONE	VAT BROWN 31	NONE	SOLVENT ORANGE 23
73360	VAT RED 1	NONE	VAT BROWN 29	NONE	SOLVENT YELLOW 107
	PIGMENT RED 181	NONE	VAT BROWN 28	NONE	SOLVENT YELLOW 87
	D+C RED 30	NONE	VAT BROWN 20	NONE	SOLVENT YELLOW 47
73361	SOLUBILIZED VAT RED 1	NONE	VAT BROWN 13	NONE	SOLVENT YELLOW 72
73385	VAT VIOLET 2	NONE	VAT BROWN 12	NONE	SOLVENT YELLOW 71
	PIGMENT VIOLET 35	NONE	VAT BLACK 13	NONE	SOLVENT BLUE 9
73390	PIGMENT RED 198	NONE	VAT BLACK 22	NONE	SOLVENT BLUE 16
73395	PIGMENT VIOLET 38	NONE	VAT BLACK 34	NONE	SOLVENT BLUE 57
	VAT VIOLET 3	NONE	VAT BLACK 52	NONE	SOLVENT BLUE 43
73410	VAT BROWN 5	NONE	VAT BLACK 38	NONE	SOLVENT BLUE 38
73670	VAT BLACK 1	NONE	VAT BLACK 37	NONE	SOLVENT BLUE 37
73671	SOLUBILIZED VAT BLACK 1	NONE	PIGMENT YELLOW 76	NONE	SOLVENT VIOLET 17
73915	PIGMENT RED 122	NONE	VAT VIOLET 21	NONE	SOLVENT RED 166
74140	VAT BLUE 29	NONE	VAT RED 12	NONE	SOLVENT RED 164
74160	BETA PIGMENT BLUE 15	NONE	VAT RED 52	NONE	SOLVENT RED 108
	ALPHA PIGMENT BLUE 15	NONE	VAT RED 16	NONE	SOLVENT RED 126
	INGRAIN BLUE 2	NONE	VAT YELLOW 15	NONE	SOLVENT RED 115
	PIGMENT GREEN 36	NONE	VAT YELLOW 33	NONE	SOLVENT RED 105
74180	LAKE PIGMENT BLUE 17	NONE	VAT YELLOW 22	NONE	SOLVENT RED 75
	DIRECT BLUE 86	NONE	VAT YELLOW 14	NONE	SOLVENT RED 74
74200	DIRECT BLUE 87	NONE	LEUCO SULFUR BROWN 82	NONE	SOLVENT RED 69
74240	INGRAIN BLUE 1	NONE	LEUCO SULFUR BROWN 81	NONE	SOLVENT BLUE 60
74260	PIGMENT GREEN 7	NONE	SOLVENT YELLOW 13	NONE	SOLVENT BLUE 58
74450	REACTIVE BLUE 7	NONE	SOLVENT YELLOW 40	NONE	SOLVENT BLUE 100
75290	NATURAL BLACK 1	NONE	SOLVENT YELLOW 45	NONE	SOLVENT BLUE 98
75291	LAKE NATURAL BLACK 3	NONE	SOLVENT YELLOW 44	NONE	SOLVENT BLUE 89
75330	NATURAL RED 6	NONE	SOLVENT YELLOW 43	NONE	SOLVENT GREEN 2
75780	NATURAL BLUE 1	NONE	SOLVENT YELLOW 42	NONE	SOLVENT BROWN 11
76070	OXIDATION BASE 22	NONE	MORDANT BLACK 26	NONE	SOLVENT BROWN 38
76075	OXIDATION BASE 8	NONE	MORDANT BLACK 8	NONE	SOLVENT BROWN 22
76076	OXIDATION BASE 8	NONE	MORDANT BROWN 70	NONE	SOLVENT BROWN 20
76540	OXIDATION BASE 21	NONE	MORDANT BROWN 63	NONE	SOLVENT BROWN 19
76555	OXIDATION BASE 25	NONE	MORDANT ORANGE 8	NONE	LEUCO SULFUR YELLOW 15
77510	PIGMENT BLUE 27	NONE	MORDANT RED 64	NONE	SOLVENT BLACK 26
NONE	PIGMENT BLUE 23	NONE	MORDANT YELLOW 29	NONE	SOLVENT BLACK 17
NONE	PIGMENT RED 91	NONE	MORDANT BLUE 19	NONE	SOLVENT BLACK 13
NONE	PIGMENT RED 170	NONE	INGRAIN BLUE 3	NONE	SOLVENT BLACK 12
NONE	PIGMENT RED 177	NONE	FLUORESCENT BRIGHTENER 159	NONE	LEUCO SULFUR BROWN 3

TABLE B-1. DYES AND PIGMENTS BY COLOR INDEX NUMBER IN NUMERICAL ORDER (CONTINUED)

COLOR INDEX	DYE OR PIGMENT NAME
NONE	SOLUBILIZED SULFUR BROWN 37
NONE	LEUCO SULFUR BROWN 37
NONE	LEUCO SULFUR BLUE 9
NONE	SULFUR BLUE 8
NONE	LEUCO SULFUR GREEN 16
NONE	SULFUR GREEN 14
NONE	PIGMENT GREEN 38
NONE	PIGMENT GREEN 40
NONE	PIGMENT BROWN 32
NONE	ACID YELLOW 49
NONE	ACID YELLOW 59
NONE	ACID YELLOW 19
NONE	ACID YELLOW 79
NONE	ACID YELLOW 124
NONE	ACID YELLOW 114
NONE	ACID YELLOW 152
NONE	ACID YELLOW 174
NONE	ACID YELLOW 159
NONE	ACID YELLOW 135
NONE	ACID YELLOW 129
NONE	ACID YELLOW 128
NONE	ACID YELLOW 127
NONE	ACID ORANGE 2
NONE	ACID YELLOW 198
NONE	ACID YELLOW 190
NONE	ACID YELLOW 179
NONE	ACID YELLOW 175
NONE	ACID BLUE 69
NONE	ACID BLUE 63
NONE	ACID BLUE 122
NONE	ACID BLUE 165
NONE	ACID BLUE 198
NONE	D+C BLUE 179
NONE	ACID VIOLET 29
NONE	ACID VIOLET 76
NONE	ACID RED 337
NONE	ACID RED 309
NONE	ACID RED 299
NONE	ACID RED 278
NONE	ACID RED 277
NONE	ACID RED 266
NONE	ACID RED 225
NONE	ACID RED 213
NONE	ACID RED 212
NONE	ACID RED 211
NONE	ACID RED 119
NONE	ACID RED 100
NONE	ACID RED 167
NONE	ACID RED 175
NONE	ACID RED 178

COLOR INDEX	DYE OR PIGMENT NAME
NONE	ACID RED 182
NONE	ACID RED 191
NONE	ACID RED 194
NONE	ACID RED 57
NONE	ACID ORANGE 136
NONE	ACID ORANGE 132
NONE	ACID ORANGE 64
NONE	ACID ORANGE 62
NONE	ACID ORANGE 69
NONE	ACID ORANGE 128
NONE	ACID ORANGE 119
NONE	ACID ORANGE 116
NONE	ACID ORANGE 86
NONE	ACID BLACK 29
NONE	ACID BROWN 354
NONE	ACID BROWN 243
NONE	ACID BROWN 239
NONE	ACID BROWN 158
NONE	ACID BROWN 152
NONE	ACID BROWN 98
NONE	ACID BROWN 97
NONE	ACID BROWN 96
NONE	ACID BLACK 172
NONE	ACID BLACK 140
NONE	ACID BLACK 58
NONE	ACID BLACK 53
NONE	ACID BLACK 139
NONE	ACID BLACK 108
NONE	ACID BLACK 107
NONE	ACID BLACK 92
NONE	ACID GREEN 58
NONE	ACID GREEN 84
NONE	ACID GREEN 70
NONE	ACID BROWN 19
NONE	ACID BROWN 28
NONE	ACID BROWN 22
NONE	ACID BROWN 58
NONE	ACID BROWN 51
NONE	ACID BROWN 45
NONE	ACID BROWN 31
NONE	ACID BLUE 221
NONE	ACID BLUE 215
NONE	ACID BLUE 203
NONE	ACID BLUE 298
NONE	ACID BLUE 231
NONE	AZOIC BROWN 9
NONE	AZOIC RED 74
NONE	AZOIC BLUE 2
NONE	AZOIC BLUE 3
NONE	AZOIC RED 73

COLOR INDEX	DYE OR PIGMENT NAME
NONE	AZOIC BLACK 1
NONE	AZOIC BROWN 26
NONE	AZOIC BLACK 15
NONE	AZOIC BLACK 4
NONE	BASIC BLUE 35
NONE	BASIC BLUE 22
NONE	BASIC BLUE 21
NONE	BASIC BLUE 45
NONE	BASIC BLUE 47
NONE	BASIC BLUE 76
NONE	BASIC BLUE 75
NONE	BASIC BLUE 69
NONE	BASIC BLUE 60
NONE	BASIC VIOLET 24
NONE	BASIC VIOLET 15
NONE	BASIC ORANGE 41
NONE	BASIC ORANGE 40
NONE	BASIC RED 14
NONE	BASIC ORANGE 24
NONE	BASIC ORANGE 26
NONE	BASIC ORANGE 25
NONE	BASIC ORANGE 39
NONE	BASIC ORANGE 31
NONE	BASIC ORANGE 28
NONE	BASIC ORANGE 27
NONE	BASIC RED 73
NONE	BASIC RED 46
NONE	BASIC RED 51
NONE	BASIC RED 49
NONE	BASIC RED 23
NONE	BASIC RED 22
NONE	BASIC RED 19
NONE	BASIC RED 17
NONE	BASIC RED 16
NONE	BASIC RED 15
NONE	AZOIC COUPLING 3
NONE	BASIC YELLOW 15
NONE	BASIC YELLOW 13
NONE	BASIC YELLOW 21
NONE	BASIC YELLOW 31
NONE	BASIC YELLOW 29
NONE	BASIC YELLOW 28
NONE	BASIC YELLOW 58
NONE	BASIC YELLOW 53
NONE	BASIC YELLOW 52
NONE	BASIC YELLOW 41
NONE	SALT AZOIC DIAZOIC 121
NONE	REACTIVE BLUE 21
NONE	REACTIVE BLUE 38
NONE	REACTIVE BLUE 30

TABLE B-1. DYES AND PIGMENTS BY COLOR INDEX NUMBER IN NUMERICAL ORDER (CONTINUED)

COLOR INDEX	DYE OR PIGMENT NAME	COLOR INDEX	DYE OR PIGMENT NAME	COLOR INDEX	DYE OR PIGMENT NAME
NONE	REACTIVE BLUE 29	NONE	REACTIVE YELLOW 4	NONE	DISPERSE VIOLET 57
NONE	REACTIVE BLUE 25	NONE	REACTIVE YELLOW 3	NONE	DISPERSE VIOLET 44
NONE	REACTIVE BROWN 17	NONE	REACTIVE YELLOW 2	NONE	DISPERSE VIOLET 43
NONE	REACTIVE BROWN 10	NONE	REACTIVE YELLOW 1	NONE	DISPERSE VIOLET 42
NONE	REACTIVE BROWN 9	NONE	DISPERSE BROWN 14	NONE	DISPERSE VIOLET 41
NONE	REACTIVE GREEN 6	NONE	DISPERSE BROWN 11	NONE	DISPERSE VIOLET 40
NONE	REACTIVE BLUE 91	NONE	DISPERSE BROWN 8	NONE	DISPERSE RED 211
NONE	REACTIVE BLUE 90	NONE	DISPERSE BROWN 7	NONE	DISPERSE VIOLET 17
NONE	REACTIVE BLUE 89	NONE	DISPERSE BROWN 5	NONE	DISPERSE VIOLET 27
NONE	REACTIVE BLUE 71	NONE	DISPERSE BROWN 2	NONE	DISPERSE RED 180
NONE	REACTIVE BLUE 3	NONE	DISPERSE BLUE 173	NONE	DISPERSE RED 179
NONE	REACTIVE VIOLET 1	NONE	DISPERSE BLUE 172	NONE	DISPERSE RED 178
NONE	REACTIVE RED 105	NONE	DISPERSE BLUE 166	NONE	DISPERSE RED 177
NONE	REACTIVE RED 94	NONE	DISPERSE BLUE 165	NONE	DISPERSE RED 176
NONE	REACTIVE RED 86	NONE	DISPERSE BLUE 156	NONE	DISPERSE RED 167
NONE	REACTIVE RED 58	NONE	DISPERSE BLUE 152	NONE	DISPERSE RED 162
NONE	REACTIVE RED 55	NONE	DISPERSE BLUE 150	NONE	DISPERSE RED 161
NONE	REACTIVE RED 43	NONE	DISPERSE BLUE 148	NONE	DISPERSE RED 159
NONE	REACTIVE RED 41	NONE	DISPERSE BLUE 139	NONE	DISPERSE RED 140
NONE	REACTIVE RED 40	NONE	DISPERSE BLUE 138	NONE	DISPERSE RED 139
NONE	REACTIVE RED 33	NONE	DISPERSE BLUE 133	NONE	DISPERSE RED 138
NONE	REACTIVE RED 31	NONE	DISPERSE BLUE 132	NONE	DISPERSE RED 137
NONE	FLUORESCENT BRIGHTENER 49	NONE	DISPERSE BLUE 125	NONE	DISPERSE RED 136
NONE	FLUORESCENT BRIGHTENER 45	NONE	DISPERSE BLUE 123	NONE	DISPERSE RED 135
NONE	FLUORESCENT BRIGHTENER 33	NONE	REACTIVE YELLOW 15	NONE	DISPERSE RED 133
NONE	FLUORESCENT BRIGHTENER 25	NONE	REACTIVE YELLOW 7	NONE	DISPERSE BLUE 60
NONE	FLUORESCENT BRIGHTENER 24	NONE	REACTIVE YELLOW 6	NONE	DISPERSE BLUE 62
NONE	REACTIVE BLACK 9	NONE	REACTIVE YELLOW 25	NONE	DISPERSE BLUE 61
NONE	FLUORESCENT BRIGHTENER 22	NONE	REACTIVE YELLOW 24	NONE	DISPERSE BLUE 71
NONE	FLUORESCENT BRIGHTENER 8	NONE	REACTIVE YELLOW 18	NONE	DISPERSE BLUE 70
NONE	FLUORESCENT BRIGHTENER 6	NONE	REACTIVE YELLOW 17	NONE	DISPERSE BLUE 64
NONE	FLUORESCENT BRIGHTENER 134	NONE	REACTIVE ORANGE 5	NONE	DISPERSE BLUE 8
NONE	FLUORESCENT BRIGHTENER 130	NONE	REACTIVE ORANGE 4	NONE	DISPERSE BLUE 35
NONE	FLUORESCENT BRIGHTENER 128	NONE	REACTIVE ORANGE 1	NONE	DISPERSE BLUE 55
NONE	FLUORESCENT BRIGHTENER 126	NONE	REACTIVE YELLOW 86	NONE	DISPERSE BLUE 54
NONE	FLUORESCENT BRIGHTENER 125	NONE	REACTIVE YELLOW 62	NONE	DISPERSE BLUE 121
NONE	FLUORESCENT BRIGHTENER 114	NONE	REACTIVE YELLOW 42	NONE	DISPERSE BLUE 120
NONE	FLUORESCENT BRIGHTENER 109	NONE	REACTIVE YELLOW 37	NONE	DISPERSE BLUE 119
NONE	FLUORESCENT BRIGHTENER 108	NONE	REACTIVE YELLOW 31	NONE	DISPERSE BLUE 118
NONE	FLUORESCENT BRIGHTENER 102	NONE	REACTIVE RED 2	NONE	DISPERSE BLUE 117
NONE	FLUORESCENT BRIGHTENER 75	NONE	REACTIVE RED 5	NONE	DISPERSE BLUE 116
NONE	FLUORESCENT BRIGHTENER 71	NONE	REACTIVE RED 11	NONE	DISPERSE BLUE 112
NONE	FLUORESCENT BRIGHTENER 68	NONE	REACTIVE RED 29	NONE	DISPERSE BLUE 109
NONE	FLUORESCENT BRIGHTENER 61	NONE	REACTIVE RED 21	NONE	DISPERSE BLUE 102
NONE	FLUORESCENT BRIGHTENER 59	NONE	REACTIVE ORANGE 50	NONE	DISPERSE BLUE 95
NONE	FLUORESCENT BRIGHTENER 54	NONE	REACTIVE ORANGE 49	NONE	DISPERSE BLUE 94
NONE	FLUORESCENT BRIGHTENER 52	NONE	REACTIVE ORANGE 14	NONE	DISPERSE BLUE 87
NONE	DISPERSE BLACK 9	NONE	REACTIVE ORANGE 13	NONE	DISPERSE BLUE 85
NONE	DISPERSE BLACK 34	NONE	REACTIVE ORANGE 12	NONE	DISPERSE BLUE 81
NONE	DISPERSE BLACK 33	NONE	REACTIVE ORANGE 11	NONE	DISPERSE BLUE 79

TABLE B-1. DYES AND PIGMENTS BY COLOR INDEX NUMBER IN NUMERICAL ORDER (CONTINUED)

COLOR INDEX	DYE OR PIGMENT NAME
NONE	DISPERSE BLUE 73
NONE	DISPERSE RED 35
NONE	DISPERSE RED 30
NONE	DISPERSE RED 21
NONE	DISPERSE ORANGE 98
NONE	DISPERSE ORANGE 94
NONE	DISPERSE ORANGE 91
NONE	DISPERSE RED 59
NONE	DISPERSE RED 55
NONE	DISPERSE RED 54
NONE	DISPERSE RED 74
NONE	DISPERSE RED 73
NONE	DISPERSE RED 65
NONE	DISPERSE RED 65
NONE	DISPERSE RED 117
NONE	DISPERSE RED 105
NONE	DISPERSE RED 96
NONE	DISPERSE RED 91
NONE	DISPERSE RED 90
NONE	DISPERSE RED 88
NONE	DISPERSE RED 86
NONE	DISPERSE RED 82
NONE	DISPERSE ORANGE 16
NONE	DISPERSE YELLOW 131
NONE	DISPERSE YELLOW 125
NONE	DISPERSE YELLOW 113
NONE	DISPERSE YELLOW 95
NONE	DISPERSE YELLOW 95
NONE	DISPERSE ORANGE 41
NONE	DISPERSE ORANGE 38
NONE	DISPERSE ORANGE 37
NONE	DISPERSE ORANGE 30
NONE	DISPERSE ORANGE 29
NONE	DISPERSE ORANGE 25
NONE	DISPERSE ORANGE 21
NONE	DISPERSE ORANGE 17
NONE	DISPERSE ORANGE 90
NONE	DISPERSE ORANGE 89
NONE	DISPERSE ORANGE 80
NONE	DISPERSE ORANGE 79
NONE	DISPERSE ORANGE 78
NONE	DISPERSE ORANGE 77
NONE	DISPERSE ORANGE 75
NONE	DISPERSE ORANGE 67
NONE	DISPERSE ORANGE 66
NONE	DISPERSE ORANGE 65
NONE	DISPERSE ORANGE 62
NONE	DISPERSE ORANGE 59
NONE	DISPERSE ORANGE 58
NONE	DISPERSE ORANGE 57

COLOR INDEX	DYE OR PIGMENT NAME
NONE	DISPERSE ORANGE 44
NONE	DISPERSE ORANGE 42
NONE	DIRECT BLUE 91
NONE	DIRECT BLUE 100
NONE	DIRECT BLUE 104
NONE	DIRECT BLUE 143
NONE	DIRECT BLUE 160
NONE	DIRECT BLUE 191
NONE	DIRECT BLUE 189
NONE	DIRECT GREEN 69
NONE	DIRECT GREEN 47
NONE	DIRECT GREEN 45
NONE	DIRECT GREEN 27
NONE	DIRECT BLUE 199
NONE	DIRECT BLUE 263
NONE	DIRECT BLUE 224
NONE	DIRECT BLUE 80
NONE	DIRECT BLUE 24
NONE	DIRECT VIOLET 67
NONE	DIRECT VIOLET 99
NONE	DIRECT BLUE 6
NONE	DISPERSE YELLOW 34
NONE	DISPERSE YELLOW 33
NONE	DISPERSE YELLOW 32
NONE	DIRECT BLACK 95
NONE	DISPERSE YELLOW 2
NONE	DIRECT BLACK 190
NONE	DISPERSE YELLOW 67
NONE	DISPERSE YELLOW 69
NONE	DISPERSE YELLOW 68
NONE	DISPERSE YELLOW 50
NONE	DISPERSE YELLOW 58
NONE	DISPERSE YELLOW 56
NONE	DISPERSE YELLOW 93
NONE	DISPERSE YELLOW 89
NONE	DISPERSE YELLOW 88
NONE	DISPERSE YELLOW 87
NONE	DISPERSE YELLOW 86
NONE	DISPERSE YELLOW 85
NONE	DISPERSE YELLOW 77
NONE	DISPERSE YELLOW 74
NONE	DIRECT BROWN 48
NONE	DIRECT BROWN 111
NONE	DIRECT BROWN 40
NONE	DIRECT BROWN 1
NONE	DIRECT BLACK 37
NONE	DIRECT BLACK 44
NONE	DIRECT BROWN 218
NONE	DIRECT BLACK 8
NONE	DIRECT YELLOW 39

COLOR INDEX	DYE OR PIGMENT NAME
NONE	DIRECT YELLOW 23
NONE	BASIC BLACK 9
NONE	BASIC GREEN 7
NONE	BASIC BLUE 97
NONE	BASIC GREEN 3
NONE	BASIC BLUE 94
NONE	BASIC BLUE 87
NONE	BASIC BLUE 82
NONE	BASIC BLUE 77
NONE	DIRECT YELLOW 63
NONE	DIRECT YELLOW 105
NONE	DIRECT YELLOW 103
NONE	DIRECT YELLOW 84
NONE	DIRECT YELLOW 81
NONE	DIRECT YELLOW 107
NONE	DIRECT YELLOW 117
NONE	DIRECT YELLOW 114
NONE	DIRECT YELLOW 127
NONE	DIRECT YELLOW 120
NONE	DIRECT YELLOW 119
NONE	DIRECT YELLOW 118
NONE	DIRECT ORANGE 11
NONE	DIRECT YELLOW 137
NONE	DIRECT YELLOW 133
NONE	DIRECT YELLOW 132
NONE	DIRECT YELLOW 131
NONE	DIRECT RED 100
NONE	DIRECT RED 139
NONE	DIRECT RED 238
NONE	DIRECT RED 236
NONE	DIRECT RED 212
NONE	DIRECT RED 209
NONE	DIRECT RED 95
NONE	DIRECT ORANGE 59
NONE	DIRECT ORANGE 72
NONE	DIRECT ORANGE 67
NONE	DIRECT ORANGE 61
NONE	DIRECT ORANGE 80
NONE	DIRECT ORANGE 79
NONE	DIRECT ORANGE 78
NONE	DIRECT ORANGE 110
NONE	DIRECT ORANGE 88

APPENDIX C

DYES AND PIGMENTS MANUFACTURED IN 1973
LISTED IN ALPHABETICAL ORDER BY MANUFACTURER

TABLE C-1. DYES AND PIGMENTS MANUFACTURED IN 1973 (CONTINUED)
ALLIANCE CHEMICAL, INC.

DYE OR PIGMENT NAME	COLOR INDEX
*AZOIC YELLOW 1	37610
*AZOIC YELLOW 1	37090
AZOIC YELLOW 2	37610
AZOIC YELLOW 2	37120
AZOIC ORANGE 3	37558
AZOIC ORANGE 3	37010
AZOIC RED 1	37558
AZOIC RED 1	37090
AZOIC RED 2	37530
AZOIC RED 2	37120
AZOIC BLUE 3	NONE
AZOIC BROWN 9	NONE
*BASE AZOIC DIAZOIC 4	37210
*BASE AZOIC DIAZOIC 28	37151
BASE AZOIC DIAZOIC 32	37090
*BASE AZOIC DIAZOIC 34	37100
SALT AZOIC DIAZOIC 1	37135
SALT AZOIC DIAZOIC 3	37010
SALT AZOIC DIAZOIC 5	37125
SALT AZOIC DIAZOIC 8	37110
SALT AZOIC DIAZOIC 9	37040
SALT AZOIC DIAZOIC 10	37120
SALT AZOIC DIAZOIC 11	37085
SALT AZOIC DIAZOIC 12	37105
SALT AZOIC DIAZOIC 13	37130
SALT AZOIC DIAZOIC 20	37175
SALT AZOIC DIAZOIC 28	37151
SALT AZOIC DIAZOIC 32	37090
SALT AZOIC DIAZOIC 34	37100
SALT AZOIC DIAZOIC 35	37255
SALT AZOIC DIAZOIC 41	37165
SALT AZOIC DIAZOIC 42	37150
SALT AZOIC DIAZOIC 44	37000
SALT AZOIC DIAZOIC 49	37050
*AZOIC COUPLING 3	37575
*AZOIC COUPLING 15	37600
*AZOIC COUPLING 18	37520
*AZOIC COUPLING 35	37615

*LAST LISTED IN 1972

TABLE C-1. DYES AND PIGMENTS MANUFACTURED IN 1973 (CONTINUED)
ALLIED CHEMICAL CORPORATION

DYE OR PIGMENT NAME	COLOR INDEX	DYE OR PIGMENT NAME	COLOR INDEX	DYE OR PIGMENT NAME	COLOR INDEX
ACID DYE 0	13010	ACID BLUE 9	42090	BASIC BROWN 1	21000
ACID YELLOW 3	47005	ACID BLUE 20	50405	BASIC BROWN 4	21010
ACID YELLOW 17	18965	ACID BLUE 25	52055	DIRECT DYE 0	22165
ACID YELLOW 23	19140	ACID BLUE 34	42561	DIRECT YELLOW 4	24890
ACID YELLOW 34	18890	ACID BLUE 40	62125	DIRECT YELLOW 5	47035
ACID YELLOW 36	13065	*ACID BLUE 43	63000	DIRECT YELLOW 6	40001
ACID YELLOW 38	25135	ACID BLUE 45	63010	DIRECT YELLOW 8	13920
ACID YELLOW 40	18950	*ACID BLUE 62	62045	DIRECT YELLOW 11	40000
ACID YELLOW 54	19010	ACID BLUE 74	73015	DIRECT YELLOW 12	24895
ACID YELLOW 63	13095	ACID BLUE 78	62105	DIRECT YELLOW 28	19555
ACID YELLOW 73	45350	ACID BLUE 92	13390	DIRECT YELLOW 44	29000
*ACID YELLOW 76	18850	ACID BLUE 104	42735	DIRECT YELLOW 84	NONE
ACID YELLOW 124	NONE	ACID BLUE 113	26360	DIRECT YELLOW 103	NONE
ACID YELLOW 159	NONE	ACID BLUE 118	26410	DIRECT YELLOW 106	40300
ACID ORANGE 2	NONE	ACID BLUE 120	26400	DIRECT YELLOW 107	NONE
ACID ORANGE 6	14270	ACID BLUE 145	62070	DIRECT ORANGE 1	22370
ACID ORANGE 7	15510	ACID BLUE 230	62073	DIRECT ORANGE 1	22430
ACID ORANGE 8	15575	ACID GREEN 1	10020	DIRECT ORANGE 1	22375
ACID ORANGE 10	16230	ACID GREEN 3	42085	DIRECT ORANGE 6	23365
*ACID ORANGE 12	15970	ACID GREEN 9	42100	DIRECT ORANGE 6	23375
ACID ORANGE 24	20170	ACID GREEN 12	13425	DIRECT ORANGE 8	22130
ACID ORANGE 45	22195	ACID GREEN 16	44025	DIRECT ORANGE 8	22140
*ACID ORANGE 52	13025	ACID GREEN 25	61570	DIRECT ORANGE 15	40002
*ACID ORANGE 54	NONE	ACID BROWN 14	20195	DIRECT ORANGE 15	40003
ACID ORANGE 86	NONE	ACID BLACK 1	20470	DIRECT ORANGE 26	29150
ACID ORANGE 116	NONE	ACID BLACK 2	50420	DIRECT ORANGE 34	40215
ACID RED 1	18050	ACID BLACK 24	26370	DIRECT ORANGE 34	40220
ACID RED 14	14720	DIRECT BROWN 2	22311	DIRECT ORANGE 72	NONE
ACID RED 17	16180	ACID BLACK 52	15711	DIRECT ORANGE 102	29156
ACID YELLOW 18	16255	ACID BLACK 107	NONE	DIRECT RED 1	22310
ACID RED 27	16185	BASIC BRIGHTENER 0	50204	DIRECT RED 2	23500
ACID RED 37	17045	BASIC YELLOW 2	41000	DIRECT RED 4	29165
ACID RED 73	27290	BASIC YELLOW 11	48055	DIRECT RED 13	22155
ACID RED 85	22245	BASIC YELLOW 13	NONE	DIRECT RED 16	27680
ACID RED 88	15620	BASIC YELLOW 21	NONE	DIRECT RED 23	29160
ACID RED 114	23635	BASIC ORANGE 1	11320	DIRECT RED 24	29185
ACID RED 115	27201	BASIC ORANGE 2	11270	DIRECT RED 26	29190
ACID RED 115	27200	BASIC ORANGE 21	48035	DIRECT RED 28	22120
ACID RED 137	17755	BASIC RED 2	50240	DIRECT RED 31	29100
*ACID RED 167	NONE	BASIC RED 13	48015	*DIRECT RED 32	35790
ACID RED 182	NONE	BASIC RED 14	NONE	DIRECT RED 37	22240
ACID VIOLET 3	16580	BASIC RED 46	NONE	DIRECT RED 72	29200
ACID VIOLET 6	16600	BASIC VIOLET 1	42535	DIRECT RED 73	29180
ACID VIOLET 7	18055	BASIC BLUE 9	52015	DIRECT RED 80	35780
ACID VIOLET 49	42640	*BASIC BLUE 21	NONE	DIRECT RED 81	28160
ACID VIOLET 76	NONE	BASIC BLUE 22	NONE	DIRECT RED 83	29225
ACID BLUE 1	42045	BASIC GREEN 1	42040	DIRECT VIOLET 7	27855
ACID BLUE 7	42080	BASIC GREEN 4	42000	DIRECT VIOLET 9	27885

*LAST LISTED IN 1972

TABLE C-1. DYES AND PIGMENTS MANUFACTURED IN 1973 (CONTINUED)
ALLIED CHEMICAL CORPORATION (CONTINUED)

DYE OR PIGMENT NAME	COLOR INDEX	DYE OR PIGMENT NAME	COLOR INDEX	DYE OR PIGMENT NAME	COLOR INDEX
DIRECT VIOLET 48	29125	D+C RED 22	45380	SOLVENT BLACK 5	50415
DIRECT VIOLET 51	27905	D+C RED 28	45410	SOLVENT BLACK 7	50415
DIRECT BLUE 1	24410	D+C RED 33	17200	SOLVENT BLACK 12	NONE
DIRECT BLUE 2	22590	D+C RED 37	45170	SOLVENT BLACK 13	NONE
DIRECT BLUE 6	NONE	D+C VIOLET 2	60725	VAT YELLOW 1	70600
DIRECT BLUE 8	24140	D+C YELLOW 11	47000	*VAT ORANGE 15	69025
DIRECT BLUE 14	23850	EXT. D+C GREEN 1	59040	VAT VIOLET 10	60000
DIRECT BLUE 15	24400	EXT. D+C YELLOW 1	13065	VAT BLUE 1	73000
DIRECT BLUE 22	24280	MORDANT YELLOW 8	18821	VAT BLUE 20	59800
DIRECT BLUE 25	23790	MORDANT YELLOW 14	14055	PIGMENT YELLOW 1	11680
DIRECT BLUE 71	34140	MORDANT YELLOW 20	14110	PIGMENT YELLOW 3	11710
DIRECT BLUE 76	24411	MORDANT BROWN 1	20110	PIGMENT YELLOW 4	11665
DIRECT BLUE 78	34200	MORDANT BROWN 13	13225	PIGMENT YELLOW 65	11740
DIRECT BLUE 80	NONE	MORDANT BROWN 18	20150	PIGMENT YELLOW 73	11738
DIRECT BLUE 191	NONE	MORDANT BROWN 33	13250	PIGMENT YELLOW 12	21090
DIRECT BLUE 218	24401	MORDANT BLACK 1	15710	PIGMENT YELLOW 14	21095
DIRECT GREEN 1	30280	MORDANT BLACK 9	16500	PIGMENT YELLOW 17	21105
DIRECT GREEN 6	30295	MORDANT BLACK 11	14645	PIGMENT YELLOW 83	21100
DIRECT BROWN 31	35660	*MORDANT BLACK 17	15705	PIGMENT YELLOW 24	70600
DIRECT BROWN 74	36300	SOLVENT YELLOW 3	11160	PIGMENT YELLOW 108	68420
DIRECT BROWN 95	30145	SOLVENT YELLOW 14	12055	*PIGMENT YELLOW 123	65049
DIRECT BROWN 154	30120	SOLVENT YELLOW 30	21240	PIGMENT ORANGE 1	11725
DIRECT BROWN 218	NONE	SOLVENT YELLOW 33	47000	PIGMENT ORANGE 13	21110
DIRECT BLACK 2	31575	SOLVENT YELLOW 40	NONE	PIGMENT ORANGE 15	21130
DIRECT BLACK 4	30245	SOLVENT YELLOW 42	NONE	PIGMENT ORANGE 16	21160
DIRECT BLACK 9	31560	SOLVENT YELLOW 44	NONE	PIGMENT ORANGE 43	71105
DIRECT BLACK 9	31565	SOLVENT YELLOW 45	NONE	*PIGMENT VAT ORANGE 3	59300
DIRECT BLACK 38	30235	SOLVENT YELLOW 56	11021	PIGMENT VAT ORANGE 4	59710
DIRECT BLACK 51	27720	SOLVENT ORANGE 1	11920	PIGMENT RED 2	12310
DIRECT BLACK 56	34170	SOLVENT ORANGE 3	11270	PIGMENT RED 18	12350
DIRECT BLACK 78	30015	SOLVENT ORANGE 7	12140	PIGMENT RED 38	21120
DIRECT BLACK 80	31600	SOLVENT ORANGE 23	NONE	PIGMENT RED 41	21200
DIRECT BLACK 95	NONE	SOLVENT ORANGE 31	NONE	PIGMENT RED 48	15865
DIRECT BLACK 190	NONE	SOLVENT RED 24	26105	*PIGMENT RED 63	15880
DISPERSE BLUE 73	NONE	SOLVENT RED 26	26120	PIGMENT RED 64	15800
FD+C BLUE 1	42090	SOLVENT RED 27	26125	PIGMENT RED 87	73310
FD+C BLUE 2	73015	SOLVENT RED 68	NONE	PIGMENT RED 88	73312
FD+C RED 2	16185	SOLVENT RED 74	NONE	PIGMENT RED 122	73915
FD+C RED 3	45430	SOLVENT RED 75	NONE	PIGMENT RED 123	71145
FD+C RED 40	NONE	*SOLVENT VIOLET 17	NONE	PIGMENT RED 168	59300
FD+C VIOLET 1	42640	SOLVENT BLUE 7	50400	PIGMENT RED 179	71130
FD+C YELLOW 5	19140	SOLVENT BLUE 12	61200	PIGMENT RED 190	71140
FD+C YELLOW 6	15985	SOLVENT BLUE 16	NONE	PIGMENT RED 198	73390
D+C BLUE 6	73000	SOLVENT BLUE 38	NONE	PIGMENT VIOLET 19	46500
D+C GREEN 5	61570	SOLVENT BLUE 43	NONE	PIGMENT VIOLET 23	51319
D+C GREEN 6	61565	SOLVENT BLUE 74	63005	PIGMENT VIOLET 31	60010
D+C ORANGE 4	15510	SOLVENT GREEN 3	61565	PIGMENT VIOLET 36	73385
D+C RED 19	45170	SOLVENT BLACK 3	26150	PIGMENT VIOLET 38	73395

*LAST LISTED IN 1972

TABLE C-1. DYES AND PIGMENTS MANUFACTURED IN 1973 (CONTINUED)
ALLIED CHEMICAL CORPORATION (CONTINUED)

DYE OR PIGMENT NAME	COLOR INDEX
ALPHA PIGMENT BLUE 15	74160
BETA PIGMENT BLUE 15	74160
PIGMENT BLUE 22	69810
*PIGMENT BLUE 25	21180
PIGMENT GREEN 7	74260
PIGMENT GREEN 36	74160
PIGMENT BROWN 5	15800
PIGMENT BROWN 26	71129
LAKE ACID YELLOW 23	19140
LAKE PIGMENT VIOLET 5	58055
NATURAL BLUE 1	75780

*LAST LISTED IN 1972

TABLE C-1. DYES AND PIGMENTS MANUFACTURED IN 1973
AMERICAN COLOR AND CHEMICAL CORPORATION

DYE OR PIGMENT NAME	COLOR INDEX	DYE OR PIGMENT NAME	COLOR INDEX	DYE OR PIGMENT NAME	COLOR INDEX
ACID YELLOW 17	18965	SALT AZOIC DIAZOIC 6	37025	DIRECT BLUE 80	NONE
ACID YELLOW 23	19140	SALT AZOIC DIAZOIC 8	37110	DIRECT BLUE 86	74180
ACID YELLOW 34	18890	SALT AZOIC DIAZOIC 9	37040	DIRECT BLUE 100	NONE
ACID YELLOW 42	22910	SALT AZOIC DIAZOIC 11	37085	DIRECT BLUE 120	34085
ACID YELLOW 44	23900	SALT AZOIC DIAZOIC 12	37105	DIRECT BLUE 120	34090
ACID YELLOW 54	19010	SALT AZOIC DIAZOIC 13	37130	DIRECT BLUE 191	NONE
ACID YELLOW 63	13095	SALT AZOIC DIAZOIC 14	37151	DIRECT BLUE 218	24401
ACID YELLOW 124	NONE	SALT AZOIC DIAZOIC 49	37050	DIRECT GREEN 1	30280
ACID YELLOW 151	13906	DIRECT YELLOW 4	24890	DIRECT GREEN 6	30295
ACID YELLOW 159	NONE	DIRECT YELLOW 11	40000	DIRECT BROWN 1	30045
ACID ORANGE 1	13090	*DIRECT YELLOW 12	24895	DIRECT BROWN 31	35660
ACID ORANGE 1	13091	DIRECT YELLOW 21	40045	DIRECT BROWN 40	NONE
ACID ORANGE 7	15510	DIRECT YELLOW 26	25300	DIRECT BROWN 48	NONE
ACID ORANGE 8	15575	DIRECT YELLOW 34	29060	*DIRECT BROWN 74	36300
ACID ORANGE 31	15995	DIRECT YELLOW 44	29000	DIRECT BROWN 95	30145
ACID ORANGE 50	13150	DIRECT YELLOW 50	29025	DIRECT BLACK 4	30245
ACID ORANGE 60	18732	DIRECT YELLOW 84	NONE	DIRECT BLACK 9	31560
ACID ORANGE 116	NONE	DIRECT YELLOW 105	NONE	DIRECT BLACK 9	31565
ACID RED 4	14710	DIRECT YELLOW 106	40300	*DIRECT BLACK 19	35255
*ACID RED 35	18065	*DIRECT ORANGE 1	22370	DIRECT BLACK 22	35435
ACID RED 37	17045	*DIRECT ORANGE 1	22430	*DIRECT BLACK 36	31665
ACID RED 66	26905	*DIRECT ORANGE 1	22375	*DIRECT BLACK 37	NONE
*ACID RED 85	22245	DIRECT ORANGE 10	23370	DIRECT BLACK 38	30235
ACID RED 89	23910	DIRECT ORANGE 15	40002	DIRECT BLACK 51	27720
ACID RED 99	23285	DIRECT ORANGE 15	40003	DIRECT BLACK 78	30015
ACID RED 137	17755	DIRECT ORANGE 29	29155	DIRECT BLACK 80	31600
ACID RED 151	26900	DIRECT ORANGE 39	40215	DIRECT BLACK 190	NONE
ACID RED 182	NONE	DIRECT ORANGE 72	NONE	DISPERSE YELLOW 3	11855
ACID VIOLET 7	18055	DIRECT RED 2	23500	*DISPERSE YELLOW 5	12790
ACID BLUE 25	62055	DIRECT RED 10	22145	DISPERSE YELLOW 23	26070
ACID BLUE 45	63010	DIRECT RED 23	29160	DISPERSE YELLOW 33	NONE
ACID BLUE 113	26360	DIRECT RED 24	29185	DISPERSE YELLOW 34	NONE
ACID BLUE 118	26410	DIRECT RED 26	29190	DISPERSE YELLOW 42	10338
ACID BLUE 158	14880	DIRECT RED 79	29065	*DISPERSE YELLOW 54	47020
ACID BLUE 158	15050	DIRECT RED 80	35780	DISPERSE YELLOW 86	NONE
ACID BROWN 14	20195	DIRECT RED 81	28160	DISPERSE YELLOW 118	NONE
ACID BLACK 1	20470	DIRECT RED 83	29225	DISPERSE ORANGE 3	11005
DIRECT BROWN 2	22311	*DIRECT VIOLET 9	27885	DISPERSE ORANGE 5	11100
ACID BLACK 52	15711	DIRECT BLUE 1	24410	DISPERSE ORANGE 16	NONE
BASE AZOIC DIAZOIC 14	37151	DIRECT BLUE 2	22590	DISPERSE ORANGE 17	NONE
SALT AZOIC DIAZOIC 1	37135	DIRECT BLUE 6	NONE	*DISPERSE ORANGE 25	NONE
SALT AZOIC DIAZOIC 3	37010	*DIRECT BLUE 14	23850	DISPERSE ORANGE 29	NONE
SALT AZOIC DIAZOIC 5	37125	DIRECT BLUE 76	24411	DISPERSE ORANGE 58	NONE

*LAST LISTED IN 1972

TABLE C-1. DYES AND PIGMENTS MANUFACTURED IN 1973 (CONTINUED)
AMERICAN COLOR AND CHEMICAL CORPORATION (CONTINUED)

DYE OR PIGMENT NAME	COLOR INDEX
DISPERSE ORANGE 89	NONE
DISPERSE ORANGE 90	NONE
DISPERSE ORANGE 91	NONE
DISPERSE RED 1	11110
DISPERSE RED 5	11215
DISPERSE RED 7	11150
DISPERSE RED 11	62015
DISPERSE RED 13	11115
DISPERSE RED 17	11210
DISPERSE RED 55	NONE
DISPERSE RED 60	60756
*DISPERSE RED 66	NONE
DISPERSE RED 135	NONE
DISPERSE RED 140	NONE
DISPERSE VIOLET 1	61100
DISPERSE VIOLET 4	61105
DISPERSE VIOLET 27	NONE
DISPERSE BLUE 1	64500
DISPERSE BLUE 3	61505
DISPERSE BLUE 7	62500
DISPERSE BLUE 64	NONE
*DISPERSE BLUE 70	NONE
DISPERSE BLUE 79	NONE
DISPERSE BLUE 173	NONE
DISPERSE BROWN 1	11152
DISPERSE BROWN 11	NONE
DISPERSE BLACK 1	11365
DISPERSE BLACK 9	NONE
MORDANT BLACK 1	15710
*SOLVENT YELLOW 1	11000
SOLVENT YELLOW 14	12055
SOLVENT YELLOW 33	47000
SOLVENT YELLOW 56	11021
*SOLVENT ORANGE 3	11270
SOLVENT RED 26	26120
SOLVENT RED 52	68210
SOLVENT VIOLET 13	60725
SOLVENT VIOLET 14	61705
SOLVENT BLUE 36	61551
SOLVENT GREEN 3	61565
VAT YELLOW 2	67300
VAT ORANGE 15	69025

DYE OR PIGMENT NAME	COLOR INDEX
VAT RED 1	73360
VAT BLUE 18	59815
VAT BLUE 20	59800
VAT GREEN 3	69500
VAT BROWN 3	69015
VAT BROWN 31	NONE
VAT BLACK 25	69525
PIGMENT YELLOW 73	11738
*PTA PIGMENT RED 81	45160
PIGMENT RED 90	45380
PIGMENT RED 91	NONE
*FUGITIVE PIGMENT VIOLET 3	42535
*PTA PIGMENT VIOLET 3	42535
PIGMENT BASIC VIOLET 2	42520
PMA PIGMENT BLUE 1	42595
PIGMENT BLUE 19	42750
*PIGMENT BLUE 22	69810

*LAST LISTED IN 1972

TABLE C-1. DYES AND PIGMENTS MANUFACTURED IN 1973 (CONTINUED)
AMERICAN CYANAMID COMPANY

DYE OR PIGMENT NAME	COLOR INDEX	DYE OR PIGMENT NAME	COLOR INDEX	DYE OR PIGMENT NAME	COLOR INDEX
ACID YELLOW 1	10316	BASIC RED 12	48070	*FLUORESCENT BRIGHTENER 9	40621
ACID YELLOW 3	47005	BASIC RED 14	NONE	FLUORESCENT BRIGHTENER 28	40622
ACID YELLOW 23	19140	BASIC RED 22	NONE	FLUORESCENT BRIGHTENER 61	NONE
ACID YELLOW 42	22910	BASIC RED 30	11014	FLUORESCENT BRIGHTENER 71	NONE
*ACID YELLOW 54	19010	BASIC VIOLET 1	42535	FLUORESCENT BRIGHTENER 125	NONE
ACID YELLOW 151	13906	BASIC VIOLET 10	45170	FLUORESCENT BRIGHTENER 130	NONE
ACID YELLOW 152	NONE	BASIC VIOLET 11	45175	*FLUORESCENT BRIGHTENER 158	NONE
ACID ORANGE 5	13080	BASIC VIOLET 18	11043	FLUORESCENT BRIGHTENER 159	NONE
ACID ORANGE 7	15510	BASIC BLUE 3	51004	MORDANT YELLOW 16	25100
ACID ORANGE 8	15575	BASIC BLUE 6	51175	MORDANT ORANGE 1	14030
ACID ORANGE 10	16230	BASIC BLUE 9	52015	MORDANT RED 3	58005
ACID ORANGE 24	20170	BASIC BLUE 54	11052	MORDANT RED 7	18760
*ACID ORANGE 64	NONE	BASIC BLUE 76	NONE	MORDANT RED 11	58000
ACID ORANGE 69	NONE	BASIC GREEN 1	42040	MORDANT BLACK 17	15705
ACID RED 1	18050	BASIC GREEN 4	42000	OXIDATION BASE 8	76075
ACID RED 26	16150	BASIC BROWN 1	21000	OXIDATION BASE 8	76076
ACID RED 73	27290	BASIC BROWN 4	21010	*OXIDATION BASE 22	76070
ACID RED 88	15620	DIRECT YELLOW 4	24890	*OXIDATION BASE 25	76555
ACID RED 151	26900	DIRECT YELLOW 5	47035	SOLVENT YELLOW 13	NONE
ACID VIOLET 3	16580	DIRECT YELLOW 6	40001	SOLVENT YELLOW 14	12055
ACID VIOLET 6	16600	DIRECT YELLOW 11	40000	SOLVENT YELLOW 33	47000
ACID VIOLET 49	42640	DIRECT YELLOW 12	24895	SOLVENT YELLOW 34	41000
ACID BLUE 7	42080	DIRECT YELLOW 114	NONE	SOLVENT YELLOW 47	NONE
ACID BLUE 45	63010	DIRECT ORANGE 15	40002	SOLVENT YELLOW 56	11021
ACID GREEN 1	10020	DIRECT ORANGE 15	40003	SOLVENT YELLOW 71	NONE
ACID GREEN 3	42085	DIRECT ORANGE 37	40260	SOLVENT YELLOW 72	NONE
ACID GREEN 9	42100	DIRECT ORANGE 37	40265	SOLVENT YELLOW 87	NONE
ACID GREEN 50	44090	DIRECT ORANGE 39	40215	SOLVENT ORANGE 3	11270
ACID BROWN 14	20195	DIRECT ORANGE 102	29156	SOLVENT ORANGE 7	12140
ACID BROWN 96	NONE	DIRECT RED 81	28160	SOLVENT ORANGE 20	NONE
ACID BROWN 97	NONE	DIRECT VIOLET 27	22460	SOLVENT ORANGE 25	NONE
ACID BROWN 99	NONE	DIRECT VIOLET 62	25400	SOLVENT ORANGE 48	NONE
ACID BROWN 354	NONE	DIRECT BLUE 1	24410	SOLVENT ORANGE 51	NONE
ACID BLACK 1	20470	DIRECT BLUE 6	NONE	SOLVENT RED 24	26105
ACID BLACK 2	50420	DIRECT BROWN 1	30045	SOLVENT RED 26	26120
*DIRECT BROWN 2	22311	DIRECT BLACK 2	31575	SOLVENT RED 49	45170
*ACID BLACK 48	65005	DIRECT BLACK 38	30235	SOLVENT RED 105	NONE
ACID BLACK 92	NONE	DISPERSE YELLOW 67	NONE	SOLVENT RED 108	NONE
BASIC BRIGHTENER 0	50204	*DISPERSE YELLOW 69	NONE	SOLVENT RED 111	60505
BASIC YELLOW 2	41000	DISPERSE RED 59	NONE	SOLVENT RED 115	NONE
BASIC YELLOW 11	48055	DISPERSE RED 96	NONE	SOLVENT RED 126	NONE
BASIC YELLOW 24	11480	*DISPERSE VIOLET 27	NONE	SOLVENT VIOLET 8	42535
BASIC YELLOW 37	41001	DISPERSE BLUE 73	NONE	SOLVENT BLUE 3	42775
BASIC YELLOW 41	NONE	*DISPERSE BLUE 116	NONE	SOLVENT BLUE 7	50400
BASIC ORANGE 1	11320	*REACTIVE YELLOW 62	NONE	SOLVENT BLUE 14	61555
BASIC ORANGE 2	11270	*REACTIVE ORANGE 49	NONE	SOLVENT BLUE 38	NONE
BASIC ORANGE 21	48035	FLUORESCENT BRIGHTENER 6	NONE	SOLVENT BLUE 58	NONE
BASIC ORANGE 31	NONE	FLUORESCENT BRIGHTENER 8	NONE	SOLVENT BLUE 59	61552

*LAST LISTED IN 1972

TABLE C-1. DYES AND PIGMENTS MANUFACTURED IN 1973 (CONTINUED)
AMERICAN CYANAMID COMPANY (CONTINUED)

DYE OR PIGMENT NAME	COLOR INDEX
SOLVENT BLUE 60	NONE
SOLVENT BLUE 89	NONE
SOLVENT GREEN 1	42000
SOLVENT BROWN 12	21010
SOLVENT BROWN 20	NONE
SOLVENT BROWN 38	NONE
SOLVENT BLACK 5	50415
SOLVENT BLACK 7	50415
SOLVENT BLACK 26	NONE
LEUCO SULFUR YELLOW 2	53120
*LEUCO SULFUR YELLOW 15	NONE
*SULFUR BLUE 5	53235
SULFUR BLUE 7	53440
LEUCO SULFUR BLUE 7	53440
LEUCO SULFUR BLUE 13	53450
SULFUR BROWN 26	53090
LEUCO SULFUR BROWN 81	NONE
LEUCO SULFUR BROWN 82	NONE
LEUCO SULFUR BLACK 1	53185
SOLUBILIZED SULFUR BLACK 1	53186
LEUCO SULFUR BLACK 2	53195
*LEUCO SULFUR BLACK 10	53190
VAT YELLOW 15	NONE
VAT ORANGE 1	59105
VAT ORANGE 2	59705
VAT ORANGE 9	59700
VAT ORANGE 15	69025
VAT RED 1	73360
VAT VIOLET 1	60010
VAT VIOLET 2	73385
VAT BLUE 4	69800
VAT BLUE 6	69825
VAT BLUE 11	69815
VAT BLUE 18	59815
VAT BLUE 20	59800
VAT GREEN 1	59825
VAT GREEN 3	69500
*VAT GREEN 9	59850
VAT BROWN 1	70800
VAT BROWN 3	69015
VAT BROWN 5	73410
*VAT BROWN 29	NONE
VAT BLACK 22	NONE
VAT BLACK 25	69525
VAT BLACK 27	69005
*VAT BLACK 52	NONE
PIGMENT YELLOW 1	11680
PIGMENT YELLOW 12	21090
PIGMENT YELLOW 14	21095
PIGMENT ORANGE 5	12075
PIGMENT ORANGE 13	21110
PIGMENT RED 17	12390
PIGMENT RED 22	12315
PIGMENT RED 23	12355
PIGMENT RED 3	12120
PIGMENT RED 4	12085
PIGMENT RED 48	15865
BARIUM PIGMENT RED 49	15630
CALCIUM PIGMENT RED 49	15630
*SODIUM PIGMENT RED 49	15630
BARIUM PIGMENT RED 53	15585
*PTA PIGMENT RED 81	45160
PIGMENT RED 122	73915
FUGITIVE PIGMENT VIOLET 3	42535
PTA PIGMENT VIOLET 3	42535
PIGMENT VIOLET 23	51319
ALPHA PIGMENT BLUE 15	74160
BETA PIGMENT BLUE 15	74160
PTA PIGMENT GREEN 2	42040
PTA PIGMENT GREEN 2	49005
PTA PIGMENT GREEN 4	42000
PIGMENT GREEN 7	74260
PIGMENT GREEN 36	74160
NATURAL RED 6	75330

*LAST LISTED IN 1972

TABLE C-1. DYES AND PIGMENTS MANUFACTURED IN 1973 (CONTINUED)
AMERICAN HOECHST CORPORATION

DYE OR PIGMENT NAME	COLOR INDEX	DYE OR PIGMENT NAME	COLOR INDEX	DYE OR PIGMENT NAME	COLOR INDEX
ACID YELLOW 190	NONE	VAT RED 15	71100	PIGMENT BROWN 32	NONE
ACID BLUE 215	NONE	VAT RED 41	73300		
AZOIC BLUE 3	NONE	VAT VIOLET 2	73385		
AZOIC BROWN 9	NONE	VAT VIOLET 3	73395		
AZOIC BLACK 1	NONE	VAT VIOLET 13	58700		
*AZOIC COUPLING 7	37565	VAT BLUE 5	73065		
AZOIC COUPLING 13	37595	SOLUBILIZED VAT BLUE 6	69826		
AZOIC COUPLING 35	37615	VAT BLUE 67	70507		
*AZOIC COUPLING 107	37107	VAT GREEN 9	59850		
BASIC BLUE 3	51004	VAT BROWN 5	73410		
DISPERSE YELLOW 58	NONE	VAT BROWN 57	NONE		
DISPERSE YELLOW 68	NONE	VAT BLACK 1	73670		
DISPERSE ORANGE 42	NONE	SOLUBILIZED VAT BLACK 1	73671		
DISPERSE BLUE 79	NONE	PIGMENT YELLOW 1	11680		
*DISPERSE BLUE 95	NONE	PIGMENT YELLOW 3	11710		
DISPERSE BLUE 152	NONE	PIGMENT YELLOW 98	11000		
REACTIVE YELLOW 13	18990	PIGMENT YELLOW 12	21090		
REACTIVE YELLOW 15	NONE	PIGMENT YELLOW 13	21100		
REACTIVE YELLOW 17	NONE	PIGMENT YELLOW 14	21095		
REACTIVE YELLOW 24	NONE	PIGMENT YELLOW 17	21105		
REACTIVE YELLOW 31	NONE	PIGMENT YELLOW 83	21108		
REACTIVE YELLOW 37	NONE	*PIGMENT YELLOW 10	12710		
REACTIVE YELLOW 42	NONE	PIGMENT YELLOW 16	20040		
REACTIVE ORANGE 16	17757	PIGMENT YELLOW 97	11767		
REACTIVE ORANGE 50	NONE	PIGMENT ORANGE 5	12075		
REACTIVE RED 21	NONE	PIGMENT ORANGE 16	21160		
REACTIVE RED 94	NONE	*PIGMENT ORANGE 38	NONE		
REACTIVE RED 105	NONE	*PIGMENT ORANGE 43	71105		
REACTIVE VIOLET 4	18096	PIGMENT VAT ORANGE 3	59300		
REACTIVE VIOLET 5	18097	PIGMENT VAT ORANGE 7	71105		
REACTIVE BLUE 19	61200	PIGMENT RED 7	12420		
REACTIVE BLUE 21	NONE	PIGMENT RED 9	12460		
REACTIVE BLUE 38	NONE	PIGMENT RED 88	73312		
REACTIVE BLUE 89	NONE	PIGMENT RED 112	12370		
REACTIVE BLUE 90	NONE	*PIGMENT RED 122	73915		
*REACTIVE BLUE 91	NONE	PIGMENT RED 146	12485		
REACTIVE BLACK 5	20505	PIGMENT RED 149	71137		
VAT YELLOW 4	59100	PIGMENT RED 170	NONE		
*SOLUBILIZED VAT YELLOW 4	59101	PIGMENT RED 176	12515		
VAT ORANGE 1	59105	PIGMENT RED 181	73360		
*SOLUBILIZED VAT ORANGE 1	59106	PIGMENT VAT RED 15	71100		
VAT ORANGE 3	59300	PIGMENT VIOLET 23	51319		
VAT ORANGE 5	73335	PIGMENT VIOLET 36	73385		
SOLUBILIZED VAT ORANGE 5	73336	PIGMENT VIOLET 74	NONE		
VAT ORANGE 7	71105	ALPHA PIGMENT BLUE 15	74160		
VAT RED 1	73360	PIGMENT BLUE 23	NONE		
SOLUBILIZED VAT RED 1	73361	PIGMENT GREEN 7	74260		
VAT RED 14	71110	PIGMENT GREEN 40	NONE		

*LAST LISTED IN 1972

TABLE C-1. DYES AND PIGMENTS MANUFACTURED IN 1973 (CONTINUED)
APOLLO COLORS, INC.

DYE OR PIGMENT NAME	COLOR INDEX
PIGMENT YELLOW 12	21090
PIGMENT YELLOW 13	21100
PIGMENT YELLOW 14	21095
BARIUM PIGMENT RED 49	15630
BARIUM PIGMENT RED 53	15585
ALPHA PIGMENT BLUE 15	74160

TABLE C-1. DYES AND PIGMENTS MANUFACTURED IN 1973 (CONTINUED)
ATLANTIC CHEMICAL INDUSTRIES, INC.

DYE OR PIGMENT NAME	COLOR INDEX	DYE OR PIGMENT NAME	COLOR INDEX	DYE OR PIGMENT NAME	COLOR INDEX
ACID DYE 0	13010	ACID BLUE 40	62125	AZOIC DIAZOIC 0	37185
ACID YELLOW 11	18820	ACID BLUE 41	62130	BASE AZOIC DIAZOIC 2	37005
*ACID YELLOW 17	18965	ACID BLUE 45	63010	BASE AZOIC DIAZOIC 4	37210
ACID YELLOW 34	18890	ACID BLUE 78	62105	BASE AZOIC DIAZOIC 5	37125
ACID YELLOW 38	25135	ACID BLUE 80	61585	BASE AZOIC DIAZOIC 10	37120
ACID YELLOW 40	18950	ACID BLUE 92	13390	BASE AZOIC DIAZOIC 11	37085
ACID YELLOW 65	14170	ACID BLUE 113	26360	BASE AZOIC DIAZOIC 13	37130
*ACID YELLOW 124	NONE	ACID BLUE 118	26410	BASE AZOIC DIAZOIC 32	37090
*ACID YELLOW 151	13906	ACID BLUE 120	26400	*BASE AZOIC DIAZOIC 46	37080
ACID ORANGE 7	15510	ACID GREEN 20	20495	AZOIC COUPLING 2	37505
ACID ORANGE 8	15575	ACID GREEN 25	61570	AZOIC COUPLING 4	37560
ACID ORANGE 10	16230	ACID BLACK 1	20470	AZOIC COUPLING 8	37525
*ACID ORANGE 52	13025	ACID BLACK 26	27070	AZOIC COUPLING 10	37510
ACID ORANGE 60	18732	ACID BLACK 26	27075	*AZOIC COUPLING 11	37535
ACID ORANGE 63	22870	*ACID BLACK 52	15711	AZOIC COUPLING 12	37550
ACID ORANGE 116	NONE	AZOIC YELLOW 1	37610	AZOIC COUPLING 14	37558
ACID RED 1	18050	AZOIC YELLOW 1	37090	AZOIC COUPLING 17	37515
ACID RED 4	14710	AZOIC YELLOW 2	37610	AZOIC COUPLING 18	37520
ACID RED 14	14720	AZOIC YELLOW 2	37120	AZOIC COUPLING 20	37530
ACID RED 17	16180	AZOIC YELLOW 3	37610	AZOIC COUPLING 21	37526
ACID YELLOW 18	16255	AZOIC YELLOW 3	37558	AZOIC COUPLING 29	37527
ACID RED 26	16150	AZOIC YELLOW 3	37090	AZOIC COUPLING 34	37531
ACID RED 37	17045	AZOIC ORANGE 3	37558	AZOIC COUPLING 36	37585
ACID RED 57	NONE	AZOIC ORANGE 3	37010	AZOIC COUPLING 3	NONE
ACID RED 66	26905	AZOIC RED 1	37558	BASIC YELLOW 11	48055
ACID RED 73	27290	AZOIC RED 1	37090	BASIC YELLOW 13	NONE
*ACID RED 80	68215	AZOIC RED 2	37530	BASIC ORANGE 21	48035
ACID RED 88	15620	AZOIC RED 2	37120	BASIC RED 13	48015
*ACID RED 89	23910	AZOIC RED 6	37520	BASIC RED 14	NONE
ACID RED 97	22890	AZOIC RED 6	37090	BASIC RED 15	NONE
ACID RED 99	23285	AZOIC RED 12	37550	BASIC RED 18	11085
*ACID RED 111	23266	AZOIC RED 12	37150	BASIC VIOLET 7	48020
ACID RED 114	23635	AZOIC RED 16	37520	BASIC VIOLET 16	48013
ACID RED 115	27201	AZOIC RED 16	37100	DIRECT YELLOW 4	24890
ACID RED 115	27200	AZOIC VIOLET 1	37505	DIRECT YELLOW 7	49010
ACID RED 119	NONE	AZOIC VIOLET 1	37165	DIRECT YELLOW 8	13920
ACID RED 137	17755	AZOIC BLUE 2	NONE	DIRECT YELLOW 9	19540
ACID RED 151	26900	AZOIC BLUE 3	NONE	DIRECT YELLOW 12	24895
ACID RED 167	NONE	AZOIC BLUE 6	37505	DIRECT YELLOW 26	25300
ACID RED 182	NONE	AZOIC BLUE 6	37175	DIRECT YELLOW 28	19555
*ACID RED 186	18810	AZOIC GREEN 1	37585	DIRECT YELLOW 29	19556
ACID VIOLET 7	18055	AZOIC GREEN 1	37175	DIRECT YELLOW 41	29005
ACID VIOLET 34	61710	AZOIC BROWN 7	37600	DIRECT YELLOW 44	29000
ACID VIOLET 34	61800	AZOIC BROWN 7	37120	DIRECT YELLOW 50	29025
ACID VIOLET 43	60730	AZOIC BROWN 9	NONE	*DIRECT YELLOW 59	49000
*ACID BLUE 7	42080	AZOIC BROWN 10	37550	DIRECT YELLOW 81	NONE
ACID BLUE 25	62055	AZOIC BROWN 10	37120	DIRECT YELLOW 84	NONE
ACID BLUE 27	61530	AZOIC BLACK 4	NONE	*DIRECT ORANGE 1	22370

*LAST LISTED IN 1972

TABLE C-1. DYES AND PIGMENTS MANUFACTURED IN 1973 (CONTINUED)
ATLANTIC CHEMICAL INDUSTRIES, INC. (CONTINUED)

DYE OR PIGMENT NAME	COLOR INDEX
*DIRECT ORANGE 1	22430
*DIRECT ORANGE 1	22375
DIRECT ORANGE 26	29150
*DIRECT ORANGE 29	29155
DIRECT ORANGE 34	40215
DIRECT ORANGE 34	40220
DIRECT ORANGE 37	40260
DIRECT ORANGE 37	40265
*DIRECT ORANGE 39	40215
DIRECT ORANGE 72	NONE
DIRECT ORANGE 102	29156
DIRECT RED 2	23500
DIRECT RED 4	29165
DIRECT RED 7	24100
DIRECT RED 10	22145
DIRECT RED 16	27680
*DIRECT RED 20	15075
DIRECT RED 23	29160
DIRECT RED 24	29185
DIRECT RED 26	29190
DIRECT RED 31	29100
DIRECT RED 39	23630
DIRECT RED 46	23050
DIRECT RED 62	29175
DIRECT RED 72	29200
DIRECT RED 73	29180
DIRECT RED 75	25380
DIRECT RED 79	29065
DIRECT RED 80	35780
DIRECT RED 81	28160
DIRECT RED 83	29225
DIRECT RED 84	35760
DIRECT RED 100	NONE
*DIRECT RED 122	29210
*DIRECT RED 123	17820
DIRECT RED 127	28215
DIRECT BLACK 127	28240
DIRECT RED 149	29110
DIRECT RED 153	28210
DIRECT VIOLET 1	22570
DIRECT VIOLET 7	27855
DIRECT VIOLET 9	27885
DIRECT VIOLET 14	29105
DIRECT VIOLET 51	27905
DIRECT VIOLET 56	29120
DIRECT BLUE 1	24410
DIRECT BLUE 8	24140
DIRECT BLUE 14	23850

DYE OR PIGMENT NAME	COLOR INDEX
DIRECT BLUE 15	24400
DIRECT BLUE 22	24280
DIRECT BLUE 24	NONE
DIRECT BLUE 25	23790
DIRECT BLUE 26	31930
DIRECT BLUE 67	27925
DIRECT BLUE 71	34140
DIRECT BLUE 76	24411
DIRECT BLUE 78	34200
DIRECT BLUE 80	NONE
DIRECT BLUE 81	34215
DIRECT BLUE 86	74180
DIRECT BLUE 98	23155
DIRECT BLUE 106	51300
DIRECT BLUE 108	51320
DIRECT BLUE 120	34085
DIRECT BLUE 120	34090
DIRECT BLUE 126	34010
DIRECT BLUE 151	24175
DIRECT BLUE 218	24401
*DIRECT BLUE 224	NONE
DIRECT GREEN 45	NONE
DIRECT GREEN 47	NONE
*DIRECT BROWN 31	35660
*DIRECT BROWN 95	30145
DIRECT BROWN 112	29166
DIRECT BLACK 9	31560
DIRECT BLACK 9	31565
DIRECT BLACK 19	35255
DIRECT BLACK 22	35435
*DIRECT BLACK 51	27720
*DIRECT BLACK 71	25040
DIRECT BLACK 80	31600
DISPERSE YELLOW 3	11855
DISPERSE YELLOW 8	12690
DISPERSE YELLOW 54	47020
DISPERSE ORANGE 5	11100
DISPERSE ORANGE 25	NONE
DISPERSE RED 9	60505
DISPERSE RED 60	60756
DISPERSE BLUE 64	NONE
DISPERSE BLACK 1	11365
DISPERSE BLACK 2	11255
DISPERSE BLACK 2	37185
DISPERSE BLACK 6	37235
*MORDANT YELLOW 1	14025
*MORDANT YELLOW 16	25100
*MORDANT YELLOW 20	14110

DYE OR PIGMENT NAME	COLOR INDEX
MORDANT ORANGE 6	26520
*MORDANT RED 7	18760
*MORDANT BLACK 1	15710
MORDANT BLACK 9	16500
*MORDANT BLACK 11	14645
SOLVENT ORANGE 7	12140
SOLVENT VIOLET 13	60725
SOLVENT BLUE 38	NONE
SOLVENT GREEN 3	61565
VAT YELLOW 2	67300
VAT YELLOW 4	59100
*VAT YELLOW 21	69705
VAT ORANGE 1	59105
VAT ORANGE 15	89025
VAT RED 1	73360
VAT VIOLET 1	60010
VAT VIOLET 13	68700
VAT VIOLET 14	67895
VAT BLUE 5	73065
VAT BLUE 18	59815
VAT BLUE 20	59800
VAT GREEN 3	69500
VAT GREEN 8	71050
VAT GREEN 9	59850

*LAST LISTED IN 1972

TABLE C-1. DYES AND PIGMENTS MANUFACTURED IN 1973 (CONTINUED)
BASF WYANDOTTE CORPORATION

DYE OR PIGMENT NAME	COLOR INDEX
ACID YELLOW 19	NONE
BASIC YELLOW 13	NONE
BASIC YELLOW 23	48100
BASIC YELLOW 24	11480
BASIC YELLOW 25	11450
BASIC ORANGE 40	NONE
BASIC ORANGE 41	NONE
BASIC RED 1	45160
BASIC RED 29	11460
BASIC RED 51	NONE
BASIC BLUE 41	11154
BASIC BLUE 54	11052
DISPERSE YELLOW 56	NONE
DISPERSE YELLOW 64	47023
DISPERSE RED 60	60756
DISPERSE RED 91	NONE
DISPERSE BLUE 87	NONE
DISPERSE BLUE 94	NONE
DISPERSE BLUE 148	NONE
BETA PIGMENT BLUE 15	74160
PIGMENT GREEN 7	74260

TABLE C-1. DYES AND PIGMENTS MANUFACTURED IN 1973 (CONTINUED)
BENZENOID ORGANICS, INC.

DYE OR PIGMENT NAME	COLOR INDEX
ACID YELLOW 11	18820
ACID YELLOW 17	18965
ACID RED 1	18050
ACID RED 4	14710
*ACID YELLOW 18	16255
ACID RED 89	23910
ACID RED 182	NONE
ACID VIOLET 1	17025
ACID VIOLET 7	18055
ACID VIOLET 12	18075
ACID BLUE 25	62055
ACID BLUE 27	61530
ACID BLUE 40	62125
ACID BLUE 41	62130
ACID BLUE 62	62045
ACID BLUE 78	62105
ACID BLUE 113	26360
ACID BLUE 158	14880
ACID BLUE 158	15050
ACID GREEN 20	20495
ACID BLACK 60	18165
DIRECT ORANGE 1	22370
DIRECT ORANGE 1	22430
DIRECT ORANGE 1	22375
DIRECT RED 80	35780
DIRECT RED 81	28160
MORDANT RED 7	18760
SOLVENT BLUE 11	61525
SOLVENT BLUE 12	61200
VAT BLACK 27	69005

*LAST LISTED IN 1972

TABLE C-1. DYES AND PIGMENTS MANUFACTURED IN 1973 (CONTINUED)
BERNCOLORS-POUGHKEEPSIE, INC.

DYE OR PIGMENT NAME	COLOR INDEX
ACID YELLOW 17	18965
ACID YELLOW 23	19140
ACID YELLOW 34	18890
ACID ORANGE 7	15510
ACID ORANGE 8	15575
ACID ORANGE 10	16230
ACID RED 4	14710
ACID RED 14	14720
ACID YELLOW 18	16255
ACID RED 26	16150
ACID RED 88	15620
ACID BLUE 29	20460
ACID BLUE 113	26360
ACID GREEN 20	20495
ACID BLACK 1	20470
DIRECT YELLOW 28	19555
*DIRECT RED 81	28160
MORDANT YELLOW 1	14025
MORDANT YELLOW 8	18821
MORDANT YELLOW 14	14055
MORDANT YELLOW 26	22880
MORDANT YELLOW 36	14135
MORDANT ORANGE 1	14030
*MORDANT ORANGE 4	18940
MORDANT ORANGE 6	26520
MORDANT RED 7	18760
MORDANT RED 9	16105
*MORDANT RED 64	NONE
MORDANT VIOLET 5	15670
MORDANT BLUE 9	14855
MORDANT GREEN 36	17235
MORDANT BROWN 12	11290
MORDANT BROWN 18	20150
MORDANT BROWN 33	13250
MORDANT BROWN 49	13265
MORDANT BROWN 70	NONE
MORDANT BLACK 19	12200
MORDANT BLACK 38	16160
OXIDATION BASE 21	76540

*LAST LISTED IN 1972

TABLE C-1. DYES AND PIGMENTS MANUFACTURED IN 1973 (CONTINUED)
BORDEN, INC., GRAPHIC ARTS PRODUCTS DIVISION

DYE OR PIGMENT NAME	COLOR INDEX
PIGMENT YELLOW 12	21090
PIGMENT RED 48	15865
BARIUM PIGMENT RED 49	15630
CALCIUM PIGMENT RED 49	15630
BARIUM PIGMENT RED 53	15585
CALCIUM PIGMENT RED 57	15850
PMA PIGMENT RED 81	45160
PIGMENT RED 90	45380
*PMA PIGMENT VIOLET 3	42535
PMA PIGMENT BLUE 1	42595
BETA PIGMENT BLUE 15	74160
LAKE PIGMENT BLUE 24	42090

*LAST LISTED IN 1972

TABLE C-1. DYES AND PIGMENTS MANUFACTURED IN 1973 (CONTINUED)
CHEMETRON CORPORATION

DYE OR PIGMENT NAME	COLOR INDEX
ACID BLUE 93	42780
BASIC RED 9	42500
BASIC VIOLET 1	42535
SOLVENT BLUE 23	42760
PIGMENT YELLOW 1	11680
PIGMENT YELLOW 3	11710
*PIGMENT YELLOW 4	11665
*PIGMENT YELLOW 74	11741
PIGMENT YELLOW 12	21090
PIGMENT YELLOW 14	21095
PIGMENT YELLOW 17	21105
PIGMENT ORANGE 5	12075
PIGMENT ORANGE 13	21110
PIGMENT ORANGE 16	21160
*DARK PIGMENT RED 1	12070
LIGHT PIGMENT RED 1	12070
PIGMENT RED 3	12120
PIGMENT RED 4	12085
PIGMENT RED 48	15865
BARIUM PIGMENT RED 49	15630
CALCIUM PIGMENT RED 49	15630
SODIUM PIGMENT RED 49	15630
PIGMENT RED 52	15860
BARIUM PIGMENT RED 53	15585
CALCIUM PIGMENT RED 57	15850
*PTA PIGMENT RED 81	45160
*PIGMENT RED 190	71140
FUGITIVE PIGMENT VIOLET 3	42535
*PMA PIGMENT VIOLET 3	42535
*PTA PIGMENT VIOLET 3	42535
PIGMENT VIOLET 23	51319
*PMA PIGMENT BLUE 1	42595
ALPHA PIGMENT BLUE 15	74160
BETA PIGMENT BLUE 15	74160
PIGMENT BLUE 19	42750
PIGMENT GREEN 7	74260

*LAST LISTED IN 1972

TABLE C-1. DYES AND PIGMENTS MANUFACTURED IN 1973 (CONTINUED)
CHILDS PULP COLORS, INC.

DYE OR PIGMENT NAME	COLOR INDEX
*ACID ORANGE 7	15510
ACID RED 26	16150
*PIGMENT YELLOW 14	21095
PIGMENT RED 3	12120
BARIUM PIGMENT RED 49	15630
PMA PIGMENT RED 81	45160
LAKE PIGMENT ORANGE 7	15530
LAKE ACID RED 26	16150
LAKE PIGMENT BLUE 17	74180
NATURAL BLACK 1	75290
LAKE NATURAL BLACK 3	75291

*LAST LISTED IN 1972

TABLE C-1. DYES AND PIGMENTS MANUFACTURED IN 1973 (CONTINUED)
CIBA-GEIGY CORPORATION

DYE OR PIGMENT NAME	COLOR INDEX
FLUORESCENT BRIGHTENER 1	40630
FLUORESCENT BRIGHTENER 22	NONE
FLUORESCENT BRIGHTENER 24	NONE
FLUORESCENT BRIGHTENER 46	40645
FLUORESCENT BRIGHTENER 54	NONE
FLUORESCENT BRIGHTENER 59	NONE
FLUORESCENT BRIGHTENER 71	NONE
FLUORESCENT BRIGHTENER 134	NONE

TABLE C-1. DYES AND PIGMENTS MANUFACTURED IN 1973 (CONTINUED)
CINCINNATI MILACRON CHEMICALS, INC.

DYE OR PIGMENT NAME	
FLUORESCENT BRIGHTENER 28	40622
FLUORESCENT BRIGHTENER 68	NONE

TABLE C-1. DYES AND PIGMENTS MANUFACTURED IN 1973 (CONTINUED)
CROMPTON + KNOWLES CORPORATION, ALTHOUSE DIVISION

DYE OR PIGMENT NAME	COLOR INDEX	DYE OR PIGMENT NAME	COLOR INDEX
ACID YELLOW 19	NONE	DIRECT BLACK 22	35435
ACID YELLOW 23	19140	DIRECT BLACK 38	30235
ACID YELLOW 40	18950	DISPERSE YELLOW 3	11855
ACID YELLOW 65	14170	DISPERSE YELLOW 23	26070
*ACID YELLOW 128	NONE	DISPERSE YELLOW 54	47020
ACID YELLOW 151	13906	DISPERSE RED 60	60756
ACID YELLOW 159	NONE	DISPERSE RED 65	NONE
ACID ORANGE 86	NONE	DISPERSE RED 177	NONE
ACID ORANGE 116	NONE	DISPERSE VIOLET 28	61102
*ACID RED 85	22245	DISPERSE BLUE 56	63285
ACID RED 114	23635	FD+C BLUE 1	42090
ACID RED 119	NONE	FD+C BLUE 2	73015
ACID RED 138	18073	FD+C RED 2	16185
*ACID RED 182	NONE	FD+C RED 3	45430
ACID RED 299	NONE	FD+C RED 4	14700
ACID BLUE 40	62125	FD+C YELLOW 5	19140
ACID BLUE 62	62045	FD+C YELLOW 6	15985
ACID BLUE 113	26360	D+C GREEN 5	61570
ACID GREEN 19	20440	D+C RED 36	12085
ACID BROWN 239	NONE	D+C YELLOW 7	45350
ACID BLACK 107	NONE		
BASIC YELLOW 11	48055		
BASIC YELLOW 13	NONE		
BASIC ORANGE 21	48035		
BASIC RED 14	NONE		
BASIC VIOLET 16	48013		
BASIC BLUE 3	51004		
*BASIC BLUE 21	NONE		
*DIRECT YELLOW 11	40000		
DIRECT YELLOW 34	29060		
DIRECT YELLOW 50	29025		
DIRECT YELLOW 105	NONE		
DIRECT YELLOW 106	40300		
*DIRECT ORANGE 1	22370		
*DIRECT ORANGE 1	22430		
*DIRECT ORANGE 1	22375		
DIRECT ORANGE 39	40215		
DIRECT RED 80	35780		
*DIRECT RED 81	28160		
DIRECT RED 83	29225		
*DIRECT BLUE 8	24140		
DIRECT BLUE 76	24411		
DIRECT BLUE 80	NONE		
DIRECT BLUE 86	74180		
DIRECT BLUE 98	23155		
DIRECT BLUE 100	NONE		
DIRECT BLUE 191	NONE		
DIRECT BLUE 218	24401		

*LAST LISTED IN 1972

TABLE C-1. DYES AND PIGMENTS MANUFACTURED IN 1973 (CONTINUED)
DYE SPECIALTIES, INC.

DYE OR PIGMENT NAME	COLOR INDEX
BASIC ORANGE 2	11270
BASIC RED 9	42500
BASIC VIOLET 1	42535
BASIC VIOLET 2	42520
BASIC VIOLET 3	42555
BASIC VIOLET 4	42600
BASIC VIOLET 13	42536
BASIC VIOLET 14	42510
BASIC BLUE 1	42025
BASIC BLUE 2	42025
BASIC BLUE 5	42140
BASIC BLUE 7	42595
BASIC BLUE 11	44040
BASIC BLUE 26	44045
BASIC GREEN 1	42040
BASIC GREEN 4	42000
BASIC GREEN 7	NONE
BASIC BROWN 4	21010
SOLVENT YELLOW 34	41000
SOLVENT ORANGE 3	11270
SOLVENT RED 41	42510
SOLVENT RED 49	45170
SOLVENT RED 69	NONE
SOLVENT VIOLET 8	42535
SOLVENT VIOLET 9	42555
SOLVENT BLUE 4	44045
SOLVENT BLUE 5	42595
SOLVENT BLUE 6	44040
SOLVENT BLUE 23	42760
SOLVENT GREEN 1	42000
SOLVENT BROWN 12	21010
SOLVENT BLACK 5	50415
SOLVENT BLACK 7	50415

TABLE C-1. DYES AND PIGMENTS MANUFACTURED IN 1973 (CONTINUED)
E. I. DUPONT DE NEMOURS + COMPANY, INC.

DYE OR PIGMENT NAME	COLOR INDEX	DYE OR PIGMENT NAME	COLOR INDEX	DYE OR PIGMENT NAME	COLOR INDEX
ACID DYE 0	13010	ACID BLUE 230	62073	BASIC VIOLET 16	48013
ACID DYE 0	69805	ACID BLUE 298	NONE	BASIC VIOLET 24	NONE
ACID YELLOW 17	18965	ACID GREEN 1	10020	BASIC BLUE 3	51004
ACID YELLOW 36	13065	*ACID GREEN 3	42085	BASIC BLUE 4	51004
*ACID YELLOW 40	18950	ACID BROWN 14	20195	BASIC BLUE 7	42595
ACID YELLOW 49	NONE	ACID BROWN 22	NONE	*BASIC BLUE 9	52015
ACID YELLOW 124	NONE	ACID BLACK 1	20470	BASIC BLUE 21	NONE
ACID YELLOW 151	13906	ACID BLACK 24	26370	BASIC BLUE 22	NONE
ACID YELLOW 174	NONE	ACID BLACK 26	27070	BASIC BLUE 26	44045
ACID YELLOW 175	NONE	ACID BLACK 26	27075	BASIC BLUE 35	NONE
ACID YELLOW 198	NONE	DIRECT BROWN 2	22311	BASIC BLUE 77	NONE
*ACID ORANGE 7	15510	ACID BLACK 52	15711	BASIC BLUE 82	NONE
ACID ORANGE 8	15575	ACID BLACK 107	NONE	BASIC BLUE 87	NONE
ACID ORANGE 10	16230	BASIC YELLOW 1	49005	BASIC BLUE 94	NONE
ACID ORANGE 24	20170	*BASIC YELLOW 2	41000	BASIC BLUE 97	NONE
ACID ORANGE 60	18732	BASIC YELLOW 11	48055	BASIC GREEN 1	42040
*ACID ORANGE 64	NONE	BASIC YELLOW 13	NONE	BASIC GREEN 3	NONE
ACID ORANGE 128	NONE	BASIC YELLOW 15	NONE	BASIC GREEN 4	42000
ACID ORANGE 132	NONE	BASIC YELLOW 29	NONE	BASIC BROWN 1	21000
ACID ORANGE 136	NONE	BASIC YELLOW 31	NONE	BASIC BROWN 4	21010
ACID RED 1	18050	BASIC YELLOW 37	41001	*DIRECT DYE 0	22165
ACID RED 37	17045	BASIC YELLOW 52	NONE	DIRECT YELLOW 4	24890
ACID RED 73	27290	BASIC YELLOW 53	NONE	DIRECT YELLOW 6	40001
*ACID RED 85	22245	BASIC YELLOW 58	NONE	DIRECT YELLOW 11	40000
ACID RED 88	15620	*BASIC ORANGE 1	11320	DIRECT YELLOW 12	24895
ACID RED 100	NONE	BASIC ORANGE 2	11270	DIRECT YELLOW 23	NONE
ACID RED 114	23635	BASIC ORANGE 21	48035	DIRECT YELLOW 28	19555
ACID RED 133	17995	BASIC ORANGE 24	NONE	DIRECT YELLOW 29	19556
ACID RED 137	17755	BASIC ORANGE 25	NONE	DIRECT YELLOW 44	29000
ACID RED 151	26900	BASIC ORANGE 26	NONE	*DIRECT YELLOW 50	29025
ACID RED 167	NONE	BASIC ORANGE 39	NONE	*DIRECT YELLOW 63	NONE
*ACID RED 175	NONE	BASIC RED 1	45160	DIRECT YELLOW 84	NONE
ACID RED 178	NONE	BASIC RED 2	50240	DIRECT YELLOW 119	NONE
ACID RED 182	NONE	BASIC RED 12	48070	DIRECT YELLOW 120	NONE
ACID RED 211	NONE	BASIC RED 14	NONE	DIRECT YELLOW 127	NONE
ACID RED 266	NONE	BASIC RED 15	NONE	DIRECT YELLOW 131	NONE
ACID RED 337	NONE	BASIC RED 16	NONE	DIRECT YELLOW 137	NONE
*ACID VIOLET 12	18075	BASIC RED 17	NONE	*DIRECT ORANGE 8	22130
ACID VIOLET 17	42650	BASIC RED 18	11085	*DIRECT ORANGE 8	22140
ACID BLUE 25	62055	*BASIC RED 19	NONE	DIRECT ORANGE 15	40002
ACID BLUE 40	62125	BASIC RED 49	NONE	DIRECT ORANGE 15	40003
*ACID BLUE 45	63010	BASIC RED 73	NONE	DIRECT ORANGE 34	40215
ACID BLUE 74	73015	*BASIC VIOLET 1	42535	DIRECT ORANGE 34	40220
ACID BLUE 78	62105	BASIC VIOLET 3	42555	DIRECT ORANGE 39	40215
ACID BLUE 113	26360	BASIC VIOLET 4	42600	DIRECT ORANGE 59	NONE
ACID BLUE 122	NONE	BASIC VIOLET 10	45170	DIRECT ORANGE 73	25200
ACID BLUE 145	62070	BASIC VIOLET 11	45175	DIRECT ORANGE 74	28255
ACID BLUE 165	NONE	BASIC VIOLET 15	NONE	*DIRECT ORANGE 79	NONE

*LAST LISTED IN 1972

TABLE C-1. DYES AND PIGMENTS MANUFACTURED IN 1973 (CONTINUED)
E. I. DUPONT DE NEMOURS + COMPANY, INC. (CONTINUED)

DYE OR PIGMENT NAME	COLOR INDEX	DYE OR PIGMENT NAME	COLOR INDEX	DYE OR PIGMENT NAME	COLOR INDEX
DIRECT ORANGE 81	NONE	DIRECT BROWN 154	30120	DISPERSE BLUE 165	NONE
DIRECT ORANGE 88	NONE	DIRECT BLACK 9	31560	DISPERSE BLUE 172	NONE
DIRECT ORANGE 102	29156	DIRECT BLACK 9	31565	DISPERSE BROWN 2	NONE
DIRECT RED 1	22310	DIRECT BLACK 51	27720	DISPERSE BROWN 14	NONE
DIRECT RED 2	23500	*DISPERSE YELLOW 2	NONE	DISPERSE BLACK 1	11365
DIRECT RED 16	27680	DISPERSE YELLOW 3	11855	FLUORESCENT BRIGHTENER 28	40622
DIRECT RED 23	29160	DISPERSE YELLOW 23	26070	FLUORESCENT BRIGHTENER 102	NONE
*DIRECT RED 25	29190	*DISPERSE YELLOW 32	NONE	MORDANT RED 27	45180
DIRECT RED 28	22120	DISPERSE YELLOW 42	10338	MORDANT BROWN 1	20110
*DIRECT RED 37	22240	DISPERSE YELLOW 54	47020	MORDANT BROWN 18	20150
*DIRECT RED 39	23630	DISPERSE YELLOW 64	47023	MORDANT BROWN 49	13265
DIRECT RED 72	29200	DISPERSE YELLOW 67	NONE	MORDANT BROWN 70	NONE
DIRECT RED 81	28160	DISPERSE YELLOW 131	NONE	MORDANT BLACK 1	15710
DIRECT RED 117	28230	*DISPERSE ORANGE 3	11005	*SOLVENT YELLOW 2	11020
DIRECT RED 236	NONE	DISPERSE ORANGE 25	NONE	SOLVENT YELLOW 14	12055
DIRECT RED 238	NONE	DISPERSE ORANGE 41	NONE	SOLVENT YELLOW 47	NONE
DIRECT VIOLET 9	27885	DISPERSE ORANGE 44	NONE	SOLVENT ORANGE 24	NONE
DIRECT VIOLET 22	22480	DISPERSE ORANGE 62	NONE	SOLVENT ORANGE 25	NONE
DIRECT VIOLET 51	27905	DISPERSE ORANGE 75	NONE	SOLVENT RED 24	26105
DIRECT VIOLET 67	NONE	DISPERSE ORANGE 98	NONE	SOLVENT RED 33	NONE
DIRECT VIOLET 99	NONE	DISPERSE RED 1	11110	SOLVENT RED 49	45170
DIRECT BLUE 1	24410	DISPERSE RED 11	62015	SOLVENT RED 69	NONE
*DIRECT BLUE 2	22590	DISPERSE RED 13	11115	*SOLVENT VIOLET 8	42535
DIRECT BLUE 6	NONE	DISPERSE RED 17	11210	SOLVENT BLUE 4	44045
DIRECT BLUE 8	24140	DISPERSE RED 55	NONE	SOLVENT BLUE 36	61551
DIRECT BLUE 15	24400	DISPERSE RED 59	NONE	SOLVENT BLUE 37	NONE
*DIRECT BLUE 74	34146	DISPERSE RED 60	60756	SOLVENT BLUE 38	NONE
DIRECT BLUE 78	34200	DISPERSE RED 65	NONE	SOLVENT BLUE 57	NONE
DIRECT BLUE 80	NONE	DISPERSE RED 135	NONE	SOLVENT BROWN 19	NONE
DIRECT BLUE 86	74180	DISPERSE RED 140	NONE	SOLVENT BROWN 20	NONE
DIRECT BLUE 104	NONE	DISPERSE RED 161	NONE	SOLVENT BROWN 22	NONE
DIRECT BLUE 120	34085	DISPERSE RED 162	NONE	SOLVENT BLACK 5	50415
DIRECT BLUE 120	34090	DISPERSE RED 211	NONE	SOLVENT BLACK 17	NONE
*DIRECT BLUE 125	34010	DISPERSE VIOLET 17	NONE	VAT DYE 0	70315
DIRECT BLUE 143	NONE	DISPERSE VIOLET 26	62025	VAT YELLOW 3	61725
DIRECT BLUE 199	NONE	DISPERSE VIOLET 27	NONE	VAT YELLOW 22	NONE
DIRECT BLUE 218	24401	DISPERSE VIOLET 28	61102	*VAT ORANGE 1	59105
DIRECT BLUE 263	NONE	*DISPERSE BLUE 3	61505	VAT ORANGE 2	59705
DIRECT GREEN 1	30280	DISPERSE BLUE 7	62500	VAT ORANGE 3	59300
DIRECT GREEN 6	30295	DISPERSE BLUE 56	63285	VAT ORANGE 4	59710
DIRECT GREEN 26	34045	DISPERSE BLUE 60	NONE	VAT ORANGE 9	59700
*DIRECT GREEN 27	NONE	*DISPERSE BLUE 61	NONE	VAT ORANGE 11	70805
*DIRECT GREEN 38	28280	DISPERSE BLUE 62	NONE	VAT RED 12	NONE
DIRECT GREEN 47	NONE	DISPERSE BLUE 64	NONE	VAT RED 13	70320
*DIRECT BROWN 31	35660	DISPERSE BLUE 109	NONE	VAT RED 16	NONE
*DIRECT BROWN 74	36300	DISPERSE BLUE 132	NONE	*VAT RED 23	71130
DIRECT BROWN 95	30145	DISPERSE BLUE 133	NONE	VAT RED 32	71135
DIRECT BROWN 111	NONE	DISPERSE BLUE 150	NONE	VAT RED 52	NONE

*LAST LISTED IN 1972

TABLE C-1. DYES AND PIGMENTS MANUFACTURED IN 1973 (CONTINUED)
E. I. DUPONT DE NEMOURS + COMPANY, INC. (CONTINUED)

DYE OR PIGMENT NAME	COLOR INDEX
VAT VIOLET 1	60010
VAT VIOLET 9	60005
VAT VIOLET 10	60000
VAT VIOLET 13	68700
*VAT VIOLET 17	63365
VAT BLUE 4	69800
VAT BLUE 6	69825
VAT BLUE 11	69815
VAT BLUE 12	69840
VAT BLUE 14	69810
VAT BLUE 16	71200
VAT BLUE 18	59815
VAT BLUE 20	59800
VAT BLUE 60	NONE
VAT GREEN 1	59825
VAT GREEN 3	69500
VAT GREEN 8	71050
VAT GREEN 20	NONE
VAT BROWN 1	70800
VAT BROWN 3	69015
VAT BROWN 12	NONE
VAT BROWN 40	NONE
VAT BLACK 13	NONE
VAT BLACK 25	69525
VAT BLACK 27	69005
PIGMENT YELLOW 1	11680
PIGMENT YELLOW 74	11741
*PIGMENT YELLOW 12	21090
*PIGMENT YELLOW 14	21095
*PIGMENT ORANGE 16	21160
PIGMENT RED 15	12465
PIGMENT RED 22	12315
PIGMENT RED 23	12355
PIGMENT RED 3	12120
PIGMENT RED 6	12090
*PIGMENT RED 38	21120
PIGMENT RED 48	15865
CALCIUM PIGMENT RED 57	15850
PIGMENT RED 58	15825
PMA PIGMENT RED 81	45160
PTA PIGMENT RED 81	45160
PTA PIGMENT VIOLET 1	42170
PMA PIGMENT VIOLET 3	42535
PIGMENT VIOLET 19	46500
PIGMENT VIOLET 31	60010
PMA PIGMENT BLUE 1	42595
PMA PIGMENT BLUE 14	42600
PTA PIGMENT BLUE 14	42600
ALPHA PIGMENT BLUE 15	74160
BETA PIGMENT BLUE 15	74160
PIGMENT BLUE 22	69810
PIGMENT BLUE 25	21180
PTA PIGMENT GREEN 2	42040
PTA PIGMENT GREEN 2	49005
PIGMENT GREEN 7	74260
PIGMENT GREEN 10	12775
PIGMENT GREEN 38	NONE
LAKE PIGMENT VIOLET 5	58055

*LAST LISTED IN 1972

TABLE C-1. DYES AND PIGMENTS MANUFACTURED IN 1973 (CONTINUED)
EASTMAN KODAK COMPANY

DYE OR PIGMENT NAME	COLOR INDEX
BASIC BLUE 75	NONE
DISPERSE YELLOW 23	26070
DISPERSE YELLOW 33	NONE
DISPERSE YELLOW 34	NONE
DISPERSE YELLOW 42	10338
DISPERSE YELLOW 85	NONE
DISPERSE YELLOW 86	NONE
DISPERSE YELLOW 87	NONE
DISPERSE YELLOW 88	NONE
DISPERSE YELLOW 89	NONE
DISPERSE ORANGE 3	11005
DISPERSE ORANGE 5	11100
DISPERSE ORANGE 17	NONE
DISPERSE ORANGE 25	NONE
DISPERSE ORANGE 57	NONE
DISPERSE ORANGE 58	NONE
DISPERSE ORANGE 59	NONE
DISPERSE RED 1	11110
DISPERSE RED 5	11215
DISPERSE RED 17	11210
DISPERSE RED 21	NONE
DISPERSE RED 30	NONE
DISPERSE RED 35	NONE
DISPERSE RED 60	60756
DISPERSE RED 65	NONE
DISPERSE RED 86	NONE
DISPERSE RED 88	NONE
DISPERSE RED 117	NONE
DISPERSE RED 136	NONE
DISPERSE RED 137	NONE
DISPERSE RED 138	NONE
DISPERSE VIOLET 27	NONE
DISPERSE VIOLET 41	NONE
DISPERSE VIOLET 42	NONE
*DISPERSE VIOLET 43	NONE
DISPERSE VIOLET 44	NONE
DISPERSE BLUE 3	61505
DISPERSE BLUE 14	61500
DISPERSE BLUE 27	60767
DISPERSE BLUE 62	NONE
DISPERSE BLUE 64	NONE
DISPERSE BLUE 79	NONE
DISPERSE BLUE 102	NONE
DISPERSE BLUE 112	NONE
DISPERSE BLUE 117	NONE
DISPERSE BLUE 118	NONE
DISPERSE BLUE 119	NONE
DISPERSE BLUE 120	NONE
DISPERSE BLUE 121	NONE
DISPERSE BLUE 123	NONE
DISPERSE BROWN 2	NONE
DISPERSE BROWN 5	NONE
*DISPERSE BROWN 7	NONE
DISPERSE BLACK 9	NONE
DISPERSE BLACK 33	NONE
DISPERSE BLACK 34	NONE

*LAST LISTED IN 1972

TABLE C-1. DYES AND PIGMENTS MANUFACTURED IN 1973 (CONTINUED)
FABRICOLOR CHEMICAL CORPORATION

DYE OR PIGMENT NAME	COLOR INDEX
ACID YELLOW 65	14170
*ACID YELLOW 151	13906
*ACID YELLOW 159	NONE
ACID ORANGE 115	NONE
ACID RED 99	23285
ACID RED 299	NONE
ACID BLUE 25	62055
ACID BLUE 113	26360
DIRECT BROWN 2	22311
ACID BLACK 52	15711
*BASIC RED 14	NONE
*BASIC VIOLET 15	48013
DIRECT DYE 0	22165
DIRECT YELLOW 12	24895
DIRECT YELLOW 44	29000
DIRECT YELLOW 50	29025
*DIRECT YELLOW 84	NONE
DIRECT YELLOW 106	40300
DIRECT ORANGE 8	22130
DIRECT ORANGE 8	22140
DIRECT ORANGE 29	29155
DIRECT ORANGE 39	40215
DIRECT ORANGE 72	NONE
*DIRECT RED 1	22310
DIRECT RED 2	23500
DIRECT RED 23	29160
DIRECT RED 24	29185
DIRECT RED 26	29190
DIRECT RED 28	22120
DIRECT RED 80	35780
DIRECT RED 83	29225
DIRECT BLUE 1	24410
DIRECT BLUE 2	22590
DIRECT BLUE 76	24411
DIRECT BLUE 80	NONE
DIRECT BLUE 86	74180
DIRECT BLUE 100	NONE
DIRECT BLUE 120	34085
DIRECT BLUE 120	34090
DIRECT BLUE 189	NONE
DIRECT BLUE 218	24401
DIRECT GREEN 1	30280
DIRECT GREEN 6	30295
DIRECT BROWN 95	30145
DIRECT BROWN 154	30120
DIRECT BLACK 4	30245
DIRECT BLACK 38	30235
*DIRECT BLACK 78	30015
DIRECT BLACK 80	31600
DISPERSE YELLOW 3	11855
DISPERSE YELLOW 23	26070
DISPERSE YELLOW 42	10338
DISPERSE YELLOW 54	47020
DISPERSE ORANGE 3	11005
MORDANT BLACK 1	15710

*LAST LISTED IN 1972

TABLE C-1. DYES AND PIGMENTS MANUFACTURED IN 1973 (CONTINUED)
GAF CORPORATION

DYE OR PIGMENT NAME	COLOR INDEX	DYE OR PIGMENT NAME	COLOR INDEX	DYE OR PIGMENT NAME	COLOR INDEX
ACID DYE 0	13010	ACID VIOLET 7	18055	AZOIC RED 2	37120
ACID YELLOW 23	19140	ACID VIOLET 12	18075	AZOIC RED 73	NONE
ACID YELLOW 25	18835	ACID VIOLET 17	42650	AZOIC RED 74	NONE
ACID YELLOW 29	18900	ACID VIOLET 56	16055	AZOIC BLUE 3	NONE
ACID YELLOW 36	13065	*ACID VIOLET 58	16260	AZOIC BLUE 7	37505
ACID YELLOW 38	25135	ACID BLUE 1	42045	AZOIC BLUE 7	37155
ACID YELLOW 42	22910	ACID BLUE 7	42080	AZOIC BROWN 9	NONE
ACID YELLOW 44	23900	ACID BLUE 9	42090	AZOIC BROWN 26	NONE
ACID YELLOW 76	18850	ACID BLUE 15	42645	AZOIC BLACK 4	NONE
ACID YELLOW 99	13900	ACID BLUE 25	62055	AZOIC BLACK 15	NONE
ACID YELLOW 121	18690	ACID BLUE 27	61530	AZOIC DIAZOIC 24	37155
ACID YELLOW 135	NONE	ACID BLUE 40	62125	BASE AZOIC DIAZOIC 4	37210
ACID YELLOW 151	13906	ACID BLUE 41	62130	BASE AZOIC DIAZOIC 5	37125
ACID YELLOW 159	NONE	ACID BLUE 45	63010	BASE AZOIC DIAZOIC 10	37120
ACID ORANGE 1	13090	ACID BLUE 62	62045	*BASE AZOIC DIAZOIC 28	37151
ACID ORANGE 1	13091	ACID BLUE 69	NONE	BASE AZOIC DIAZOIC 48	37235
ACID ORANGE 7	15510	ACID BLUE 78	62105	SALT AZOIC DIAZOIC 1	37135
ACID ORANGE 8	15575	ACID BLUE 83	42660	SALT AZOIC DIAZOIC 3	37010
ACID ORANGE 10	16230	ACID BLUE 104	42735	SALT AZOIC DIAZOIC 5	37125
ACID ORANGE 24	20170	ACID BLUE 113	26360	SALT AZOIC DIAZOIC 6	37025
ACID ORANGE 56	22895	ACID BLUE 120	26400	SALT AZOIC DIAZOIC 8	37110
ACID ORANGE 60	18732	ACID BLUE 158	14880	SALT AZOIC DIAZOIC 9	37040
ACID ORANGE 63	22870	ACID BLUE 158	15050	SALT AZOIC DIAZOIC 10	37120
*ACID ORANGE 72	18740	D+C BLUE 179	NONE	*SALT AZOIC DIAZOIC 12	37105
ACID ORANGE 74	18745	ACID GREEN 3	42085	SALT AZOIC DIAZOIC 13	37130
ACID ORANGE 116	NONE	*ACID GREEN 5	42095	SALT AZOIC DIAZOIC 28	37151
ACID RED 1	18050	ACID GREEN 9	42100	SALT AZOIC DIAZOIC 34	37100
ACID RED 4	14710	ACID GREEN 12	13425	SALT AZOIC DIAZOIC 35	37255
ACID RED 14	14720	ACID GREEN 16	44025	SALT AZOIC DIAZOIC 36	37275
ACID YELLOW 18	16255	ACID GREEN 20	20495	*SALT AZOIC DIAZOIC 37	37035
ACID RED 32	17065	ACID GREEN 22	42170	*SALT AZOIC DIAZOIC 42	37150
ACID RED 35	18065	ACID GREEN 25	61570	SALT AZOIC DIAZOIC 49	37050
ACID RED 37	17045	ACID GREEN 50	44090	SALT AZOIC DIAZOIC 121	NONE
ACID RED 52	45100	ACID BROWN 1	10395	*AZOIC COUPLING 2	37505
ACID RED 73	27290	ACID BROWN 6	14625	*AZOIC COUPLING 4	37560
ACID RED 85	22245	ACID BROWN 14	20195	AZOIC COUPLING 13	37595
ACID RED 88	15620	ACID BROWN 31	NONE	AZOIC COUPLING 15	37600
ACID RED 89	23910	ACID BROWN 152	NONE	AZOIC COUPLING 16	37520
ACID RED 97	22890	ACID BROWN 158	NONE	AZOIC COUPLING 19	37545
ACID RED 114	23635	*ACID BROWN 243	NONE	AZOIC COUPLING 20	37530
ACID RED 115	27201	ACID BLACK 1	20470	BASIC YELLOW 11	48055
ACID RED 115	27200	ACID BLACK 24	26370	BASIC YELLOW 13	NONE
ACID RED 133	17995	ACID BLACK 29	NONE	BASIC ORANGE 1	11320
ACID RED 137	17755	DIRECT BROWN 2	22311	BASIC ORANGE 2	11270
ACID RED 182	NONE	ACID BLACK 52	15711	BASIC ORANGE 14	46005
ACID RED 186	16810	*ACID BLACK 107	NONE	BASIC ORANGE 21	48035
ACID RED 350	26207	ACID BLACK 108	NONE	BASIC ORANGE 22	48040
ACID VIOLET 1	17025	AZOIC RED 2	37530	BASIC RED 13	48015

*LAST LISTED IN 1972

TABLE C-1. DYES AND PIGMENTS MANUFACTURED IN 1973 (CONTINUED)
GAF CORPORATION (CONTINUED)

DYE OR PIGMENT NAME	COLOR INDEX	DYE OR PIGMENT NAME	COLOR INDEX	DYE OR PIGMENT NAME	COLOR INDEX
BASIC RED 14	NONE	DIRECT RED 37	22240	DISPERSE YELLOW 33	NONE
BASIC RED 15	NONE	DIRECT RED 39	23630	DISPERSE YELLOW 42	10338
BASIC RED 18	11085	DIRECT RED 72	29200	DISPERSE YELLOW 54	47020
BASIC RED 49	NONE	DIRECT RED 75	25380	DISPERSE ORANGE 3	11005
BASIC VIOLET 7	48020	DIRECT RED 76	12245	*DISPERSE ORANGE 3	11005
BASIC VIOLET 10	45170	DIRECT RED 81	28160	DISPERSE ORANGE 5	11100
BASIC VIOLET 15	48013	DIRECT RED 111	40290	DISPERSE ORANGE 17	NONE
BASIC BLUE 1	42025	DIRECT RED 123	17620	DISPERSE ORANGE 29	NONE
BASIC BLUE 3	51004	DIRECT VIOLET 9	27885	DISPERSE RED 1	11110
BASIC BLUE 60	NONE	DIRECT VIOLET 47	25410	DISPERSE RED 4	60755
BASIC BROWN 1	21000	DIRECT BLUE 1	24410	DISPERSE RED 5	11215
BASIC BROWN 2	21030	DIRECT BLUE 2	22590	*DISPERSE RED 7	11150
BASIC BROWN 4	21010	DIRECT BLUE 6	NONE	DISPERSE RED 11	62015
DIRECT DYE 0	22165	DIRECT BLUE 8	24140	DISPERSE RED 13	11115
DIRECT YELLOW 4	24890	DIRECT BLUE 15	24400	DISPERSE RED 15	60710
DIRECT YELLOW 5	47035	DIRECT BLUE 25	23790	DISPERSE RED 17	11210
DIRECT YELLOW 6	40001	DIRECT BLUE 71	34140	DISPERSE RED 55	NONE
DIRECT YELLOW 8	13920	DIRECT BLUE 76	24411	DISPERSE RED 59	NONE
DIRECT YELLOW 11	40000	DIRECT BLUE 80	NONE	DISPERSE RED 60	60756
DIRECT YELLOW 12	24895	DIRECT BLUE 86	74180	DISPERSE RED 86	NONE
*DIRECT YELLOW 27	13950	DIRECT BLUE 98	23155	DISPERSE RED 167	NONE
DIRECT YELLOW 28	19555	DIRECT BLUE 136	24065	DISPERSE VIOLET 1	61100
DIRECT YELLOW 29	19556	DIRECT BLUE 191	NONE	DISPERSE VIOLET 4	61105
DIRECT YELLOW 44	29000	DIRECT BLUE 199	NONE	DISPERSE VIOLET 8	62030
DIRECT YELLOW 50	29025	DIRECT BLUE 218	24401	DISPERSE BLUE 1	64500
DIRECT YELLOW 84	NONE	DIRECT GREEN 1	30280	DISPERSE BLUE 3	61505
DIRECT YELLOW 106	40300	DIRECT GREEN 6	30295	DISPERSE BLUE 7	62500
DIRECT ORANGE 8	22130	DIRECT GREEN 38	28280	*DISPERSE BLUE 9	61115
DIRECT ORANGE 8	22140	*DIRECT GREEN 39	30220	DISPERSE BLUE 62	NONE
DIRECT ORANGE 11	NONE	DIRECT GREEN 47	NONE	DISPERSE BLUE 64	NONE
DIRECT ORANGE 15	40002	DIRECT BROWN 1	NONE	DISPERSE BLUE 95	NONE
DIRECT ORANGE 15	40003	DIRECT BROWN 31	35660	DISPERSE BLUE 120	NONE
DIRECT ORANGE 26	29150	DIRECT BROWN 32	34015	DISPERSE BROWN 2	NONE
DIRECT ORANGE 34	40215	DIRECT BROWN 44	35005	DISPERSE BLACK 1	11365
DIRECT ORANGE 34	40220	DIRECT BROWN 95	30145	FLUORESCENT BRIGHTENER 9	40621
DIRECT ORANGE 37	40260	DIRECT BROWN 106	36200	FLUORESCENT BRIGHTENER 25	NONE
DIRECT ORANGE 37	40265	DIRECT BROWN 111	NONE	FLUORESCENT BRIGHTENER 30	40600
DIRECT ORANGE 39	40215	DIRECT BLACK 4	30245	FLUORESCENT BRIGHTENER 33	NONE
DIRECT ORANGE 59	NONE	DIRECT BLACK 17	27700	*FLUORESCENT BRIGHTENER 45	NONE
DIRECT ORANGE 73	25200	DIRECT BLACK 22	35435	FLUORESCENT BRIGHTENER 68	NONE
DIRECT ORANGE 81	NONE	DIRECT BLACK 38	30235	FLUORESCENT BRIGHTENER 71	NONE
DIRECT ORANGE 83	29090	DIRECT BLACK 51	27720	FLUORESCENT BRIGHTENER 75	NONE
DIRECT ORANGE 102	29156	DIRECT BLACK 75	35870	FLUORESCENT BRIGHTENER 108	NONE
DIRECT RED 1	22310	DISPERSE YELLOW 1	10345	FLUORESCENT BRIGHTENER 109	NONE
DIRECT RED 20	19075	DISPERSE YELLOW 3	11855	MORDANT YELLOW 1	14025
DIRECT RED 23	29160	DISPERSE YELLOW 5	12790	MORDANT YELLOW 29	NONE
DIRECT RED 26	29190	DISPERSE YELLOW 23	26070	MORDANT ORANGE 4	18940
DIRECT RED 31	29100	DISPERSE YELLOW 31	48000	MORDANT ORANGE 6	26520

*LAST LISTED IN 1972

TABLE C-1. DYES AND PIGMENTS MANUFACTURED IN 1973 (CONTINUED)
GAF CORPORATION (CONTINUED)

DYE OR PIGMENT NAME	COLOR INDEX
MORDANT RED 7	18760
MORDANT BLUE 1	43830
MORDANT BLUE 3	43820
MORDANT BLUE 9	14855
MORDANT BROWN 1	20110
MORDANT BROWN 15	14870
MORDANT BROWN 19	14250
MORDANT BROWN 21	19600
MORDANT BROWN 33	13250
MORDANT BROWN 40	17590
MORDANT BLACK 1	15710
MORDANT BLACK 11	14645
MORDANT BLACK 17	15705
SOLVENT YELLOW 2	11020
SOLVENT YELLOW 13	NONE
SOLVENT YELLOW 14	12055
SOLVENT YELLOW 19	13900
SOLVENT YELLOW 29	21230
SOLVENT YELLOW 43	NONE
SOLVENT YELLOW 47	NONE
SOLVENT ORANGE 3	11270
SOLVENT ORANGE 5	18745
SOLVENT ORANGE 7	12140
SOLVENT ORANGE 20	NONE
SOLVENT RED 8	12715
SOLVENT RED 22	21250
SOLVENT RED 24	26105
SOLVENT RED 33	NONE
SOLVENT RED 35	45170
SOLVENT RED 35	16260
SOLVENT RED 40	NONE
SOLVENT RED 49	45170
SOLVENT BLUE 9	NONE
SOLVENT BLUE 11	61525
SOLVENT BLUE 38	NONE
SOLVENT GREEN 2	NONE
SOLVENT GREEN 3	61565
SOLVENT BROWN 11	NONE
SOLVENT BROWN 12	21010
VAT DYE 0	70315
VAT YELLOW 2	67300
VAT YELLOW 4	59100
SOLUBILIZED VAT YELLOW 10	65430
VAT ORANGE 1	59105
VAT ORANGE 2	59705
VAT ORANGE 3	59300
*VAT ORANGE 7	71105
VAT ORANGE 9	59700

DYE OR PIGMENT NAME	COLOR INDEX
VAT ORANGE 15	69025
VAT RED 10	67000
VAT RED 13	70320
VAT RED 14	71110
VAT RED 29	71140
VAT RED 32	71135
VAT VIOLET 1	60010
VAT VIOLET 9	60005
VAT VIOLET 13	68700
VAT BLUE 4	69800
VAT BLUE 6	69825
VAT BLUE 11	69815
VAT BLUE 14	69810
VAT BLUE 16	71200
VAT BLUE 18	59815
VAT BLUE 20	59800
VAT BLUE 26	60015
VAT BLUE 29	74140
VAT BLUE 39	NONE
*VAT BLUE 53	71205
VAT GREEN 1	59825
VAT GREEN 3	69500
VAT GREEN 8	71050
VAT GREEN 9	59850
VAT BROWN 1	70800
SOLUBILIZED VAT BROWN 1	70801
VAT BROWN 3	59015
VAT BROWN 20	NONE
VAT BLACK 9	69230
VAT BLACK 25	69525
VAT BLACK 27	69005
*VAT BLACK 37	NONE
VAT BLACK 38	NONE
PIGMENT YELLOW 13	21100
PIGMENT YELLOW 14	21095
PIGMENT YELLOW 17	21105
PIGMENT ORANGE 16	21160
PIGMENT RED 5	12490
PIGMENT RED 22	12315
PIGMENT RED 38	21120
*PIGMENT RED 41	21200
PIGMENT RED 48	15865
PMA PIGMENT RED 79	NONE
PMA PIGMENT RED 81	45160
PTA PIGMENT RED 81	45160
PIGMENT RED 190	71140
PMA PIGMENT VIOLET 1	45170
PTA PIGMENT VIOLET 1	42170

DYE OR PIGMENT NAME	COLOR INDEX
PMA PIGMENT VIOLET 3	42535
PIGMENT VIOLET 23	51319
PMA PIGMENT BLUE 1	42595
*PTA PIGMENT BLUE 1	42595
PMA PIGMENT BLUE 2	44045
PTA PIGMENT BLUE 9	42025
PMA PIGMENT BLUE 14	42600
PTA PIGMENT BLUE 14	42600
ALPHA PIGMENT BLUE 15	74160
BETA PIGMENT BLUE 15	74160
PIGMENT BLUE 25	21180
PIGMENT BASIC BLUE 1	42025
*PMA PIGMENT GREEN 1	42040
PMA PIGMENT GREEN 2	42040
PMA PIGMENT GREEN 2	49005
*PTA PIGMENT GREEN 2	42040
*PTA PIGMENT GREEN 2	49005
FUGITIVE PIGMENT GREEN 4	42000
PIGMENT GREEN 7	74260
PIGMENT GREEN 36	74160
PIGMENT BROWN 28	69015

*LAST LISTED IN 1972

TABLE C-1. DYES AND PIGMENTS MANUFACTURED IN 1973 (CONTINUED)
HERCULES, INC.

DYE OR PIGMENT NAME	COLOR INDEX
MORDANT GREEN 4	10005
PIGMENT YELLOW 1	11680
PIGMENT YELLOW 3	11710
PIGMENT YELLOW 5	11660
PIGMENT YELLOW 6	11670
PIGMENT YELLOW 49	11765
PIGMENT YELLOW 73	11738
PIGMENT YELLOW 74	11741
PIGMENT YELLOW 75	11770
PIGMENT YELLOW 12	21090
PIGMENT YELLOW 13	21100
PIGMENT YELLOW 14	21095
PIGMENT YELLOW 17	21105
PIGMENT YELLOW 76	NONE
*PIGMENT ORANGE 1	11725
PIGMENT ORANGE 2	12060
PIGMENT ORANGE 5	12075
PIGMENT ORANGE 13	21110
PIGMENT ORANGE 16	21160
PIGMENT RED 2	12310
PIGMENT RED 5	12490
PIGMENT RED 9	12460
PIGMENT RED 13	12395
PIGMENT RED 17	12390
PIGMENT RED 18	12350
PIGMENT RED 22	12315
PIGMENT RED 23	12355
SODIUM PIGMENT RED 112	12370
DARK PIGMENT RED 1	12070
LIGHT PIGMENT RED 1	12070
PIGMENT RED 3	12120
PIGMENT RED 4	12085
PIGMENT RED 48	15865
PIGMENT RED 52	15860
BARIUM PIGMENT RED 53	15585
CALCIUM PIGMENT RED 54	14830
CALCIUM PIGMENT RED 57	15850
PIGMENT RED 58	15825
PIGMENT RED 63	15880
PMA PIGMENT RED 81	45160
PTA PIGMENT RED 81	45160
*PIGMENT RED 90	45380
PMA PIGMENT VIOLET 1	45170
PTA PIGMENT VIOLET 1	42170
*FUGITIVE PIGMENT VIOLET 3	42535
PMA PIGMENT VIOLET 3	42535
PTA PIGMENT VIOLET 3	42535
PMA PIGMENT BLUE 1	42595
PTA PIGMENT BLUE 1	42595
PTA PIGMENT BLUE 9	42025
*PTA PIGMENT BLUE 10	44040
PMA PIGMENT BLUE 14	42600
ALPHA PIGMENT BLUE 15	74160
BETA PIGMENT BLUE 15	74160
*PIGMENT SULFUR BRIGHTENER 2	42025
PMA PIGMENT GREEN 1	42040
*PTA PIGMENT GREEN 1	42040
PMA PIGMENT GREEN 2	42040
PMA PIGMENT GREEN 2	49005
PTA PIGMENT GREEN 2	42040
PTA PIGMENT GREEN 2	49005
PIGMENT GREEN 7	74260
PIGMENT GREEN 8	10006
PIGMENT GREEN 10	12775
LAKE PIGMENT ORANGE 17	15510
LAKE PIGMENT RED 83	58000
LAKE ACID RED 17	16180
LAKE ACID RED 26	16150
LAKE PIGMENT VIOLET 5	58055
NATURAL RED 6	75330

*LAST LISTED IN 1972

TABLE C-1. DYES AND PIGMENTS MANUFACTURED IN 1973 (CONTINUED)
ICI UNITED STATES, INC.

DYE OR PIGMENT NAME	COLOR INDEX
ACID RED 80	68215
*ACID VIOLET 34	61800
ACID VIOLET 43	60730
ACID BLUE 25	62055
ACID BLUE 40	62125
*ACID BLUE 43	63000
ACID BLUE 47	62085
ACID BLUE 78	62105
ACID BLUE 81	64515
ACID GREEN 25	61570
ACID GREEN 41	62560
ACID BLACK 48	65005
DIRECT BLUE 87	74200
DISPERSE BLUE 35	NONE
*DISPERSE BLUE 72	60725
REACTIVE YELLOW 1	NONE
REACTIVE YELLOW 4	NONE
REACTIVE YELLOW 7	NONE
REACTIVE YELLOW 18	NONE
REACTIVE YELLOW 42	NONE
REACTIVE YELLOW 86	NONE
REACTIVE ORANGE 1	NONE
REACTIVE ORANGE 4	NONE
REACTIVE ORANGE 12	NONE
REACTIVE ORANGE 13	NONE
REACTIVE ORANGE 14	NONE
REACTIVE RED 1	18158
REACTIVE RED 2	NONE
REACTIVE RED 3	18159
REACTIVE RED 5	NONE
REACTIVE RED 8	17908
REACTIVE RED 11	NONE
REACTIVE RED 29	NONE
REACTIVE RED 31	NONE
REACTIVE RED 33	NONE
REACTIVE RED 43	NONE
REACTIVE RED 58	NONE
REACTIVE VIOLET 1	NONE
REACTIVE BLUE 3	NONE
REACTIVE BLUE 4	61205
REACTIVE BLUE 5	61205
REACTIVE BLUE 25	NONE
REACTIVE BLUE 71	NONE
*REACTIVE GREEN 6	NONE
REACTIVE BROWN 9	NONE
REACTIVE BROWN 10	NONE
REACTIVE BROWN 17	NONE
REACTIVE BLACK 9	NONE

DYE OR PIGMENT NAME	COLOR INDEX
INGRAIN BLUE 1	74240
INGRAIN BLUE 3	NONE
*SOLVENT RED 52	68210
*SOLVENT VIOLET 13	60725
*SOLVENT VIOLET 14	61705
*SOLVENT BLUE 11	61525
SOLVENT BLUE 13	62080
VAT YELLOW 2	67300
*SOLUBILIZED VAT YELLOW 4	59101
*VAT ORANGE 1	59105
VAT ORANGE 2	59705
VAT ORANGE 9	59700
VAT ORANGE 15	69025
VAT RED 1	73360
VAT VIOLET 1	60010
VAT VIOLET 9	60005
VAT VIOLET 13	68700
VAT BLUE 6	59825
VAT BLUE 11	69815
VAT GREEN 1	59825
*SOLUBILIZED VAT GREEN 1	59826
VAT GREEN 3	69500
*SOLUBILIZED VAT GREEN 3	69501
*VAT BROWN 1	70800
VAT BROWN 3	69015
VAT BROWN 28	NONE
*VAT BLACK 25	69525
VAT BLACK 27	69005
VAT BLACK 34	NONE
*PIGMENT YELLOW 1	11680
*PIGMENT YELLOW 49	11765

*LAST LISTED IN 1972

TABLE C-1. DYES AND PIGMENTS MANUFACTURED IN 1973 (CONTINUED)
KEWANEE OIL COMPANY, HARSHAW CHEMICAL COMPANY DIV.

DYE OR PIGMENT NAME	COLOR INDEX
ACID VIOLET 29	NONE
ACID VIOLET 43	60730
ACID VIOLET 49	42640
ACID GREEN 25	61570
*DIRECT BROWN 2	22311
DIRECT YELLOW 26	25300
DIRECT YELLOW 44	29000
DIRECT YELLOW 50	29025
DIRECT ORANGE 26	29150
DIRECT ORANGE 72	NONE
DIRECT ORANGE 74	28255
DIRECT RED 24	29185
DIRECT RED 26	29190
DIRECT RED 31	29100
DIRECT RED 80	35780
DIRECT RED 81	28160
DIRECT RED 83	29225
DIRECT BLUE 2	22590
*DIRECT BLUE 6	NONE
DIRECT BLUE 76	24411
DIRECT BLUE 80	NONE
DIRECT BLUE 126	34010
*DIRECT BROWN 95	30145
*DIRECT BLACK 38	30235
DIRECT BLACK 80	31600
DISPERSE RED 15	60710
DISPERSE VIOLET 1	61100
DISPERSE BLUE 3	61505
DISPERSE BLUE 7	62500
*DISPERSE BLUE 8	NONE
MORDANT GREEN 4	10005
MORDANT BLACK 13	63615
SOLVENT VIOLET 13	60725
SOLVENT GREEN 3	61565
PIGMENT YELLOW 1	11680
PIGMENT YELLOW 3	11710
PIGMENT YELLOW 12	21090
PIGMENT YELLOW 13	21100
PIGMENT YELLOW 14	21095
PIGMENT ORANGE 16	21160
PIGMENT RED 2	12310
PIGMENT RED 5	12490
DARK PIGMENT RED 1	12070
LIGHT PIGMENT RED 1	12070
PIGMENT RED 3	12120
PIGMENT RED 6	12090
PIGMENT RED 40	12170
PIGMENT RED 48	15865
PIGMENT RED 52	15860
CALCIUM PIGMENT RED 54	14830
PIGMENT RED 55	15820
PIGMENT RED 63	15880
PIGMENT GREEN 8	10006
*PIGMENT BROWN 2	12071
PIGMENT BROWN 5	15800
LAKE PIGMENT RED 60	16105
LAKE PIGMENT RED 83	58000
LAKE PIGMENT VIOLET 5	58055
NATURAL RED 6	75330

*LAST LISTED IN 1972

TABLE C-1. DYES AND PIGMENTS MANUFACTURED IN 1973 (CONTINUED)
INMONT CORPORATION

DYE OR PIGMENT NAME	COLOR INDEX
DIRECT BLUE 86	74180
DISPERSE YELLOW 3	11855
DISPERSE YELLOW 5	12790
DISPERSE YELLOW 23	26070
DISPERSE YELLOW 33	NONE
DISPERSE YELLOW 34	NONE
DISPERSE YELLOW 42	10338
DISPERSE YELLOW 54	47020
DISPERSE ORANGE 17	NONE
DISPERSE ORANGE 30	NONE
DISPERSE ORANGE 59	NONE
DISPERSE RED 1	11110
DISPERSE RED 5	11215
*DISPERSE RED 11	62015
*DISPERSE RED 13	11115
DISPERSE RED 15	60710
DISPERSE RED 17	11210
DISPERSE RED 31	11250
*DISPERSE RED 54	NONE
*DISPERSE RED 55	NONE
DISPERSE RED 65	NONE
DISPERSE RED 78	NONE
*DISPERSE RED 176	NONE
DISPERSE RED 177	NONE
DISPERSE RED 178	NONE
DISPERSE RED 179	NONE
DISPERSE RED 180	NONE
DISPERSE VIOLET 1	61100
*DISPERSE VIOLET 4	61105
DISPERSE VIOLET 27	NONE
DISPERSE BLUE 1	64500
DISPERSE BLUE 3	61505
DISPERSE BLUE 7	62500
*DISPERSE BLUE 27	60767
*DISPERSE BLUE 54	NONE
DISPERSE BLUE 56	63285
*DISPERSE BLUE 73	NONE
*DISPERSE BLUE 95	NONE
*DISPERSE BLUE 166	NONE
*DISPERSE BLUE 172	NONE
PIGMENT YELLOW 12	21090
PIGMENT YELLOW 13	21100
PIGMENT YELLOW 14	21095
PIGMENT YELLOW 17	21105
PIGMENT ORANGE 13	21110
PIGMENT ORANGE 16	21160
PIGMENT ORANGE 34	21115
PIGMENT RED 5	12490
PIGMENT RED 17	12390
PIGMENT RED 38	21120
PIGMENT RED 48	15865
BARIUM PIGMENT RED 53	15585
*PIGMENT RED 90	45380
ALPHA PIGMENT BLUE 15	74160
BETA PIGMENT BLUE 15	74160
PIGMENT BLUE 25	21180
PIGMENT BROWN 5	15800

*LAST LISTED IN 1972

TABLE C-1. DYES AND PIGMENTS MANUFACTURED IN 1973 (CONTINUED)
KEYSTONE COLOR WORKS, INC.

DYE OR PIGMENT NAME	COLOR INDEX
MORDANT GREEN 4	10005
PIGMENT YELLOW 3	11710
PIGMENT ORANGE 1	11725
PIGMENT RED 2	12310
PIGMENT RED 10	12440
PIGMENT RED 13	12395
PIGMENT RED 3	12120
PIGMENT RED 6	12090
PTA PIGMENT RED 81	45160
PIGMENT GREEN 8	10006
PIGMENT BROWN 3	21010
LAKE PIGMENT ORANGE 17	15510
LAKE ACID RED 26	16150
LAKE ACID BLUE 104	42735

TABLE C-1. DYES AND PIGMENTS MANUFACTURED IN 1973 (CONTINUED)
H. KOHNSTAMM + COMPANY, INC.

DYE OR PIGMENT NAME	COLOR INDEX
FD+C BLUE 1	42090
FD+C BLUE 2	73015
FD+C RED 2	16185
FD+C RED 3	45430
FD+C RED 4	14700
FD+C RED 40	NONE
FD+C YELLOW 5	19140
FD+C YELLOW 6	15985
D+C BLUE 1	42090
D+C BLUE 6	73000
D+C GREEN 5	61570
D+C GREEN 6	61565
D+C GREEN 8	10020
D+C ORANGE 4	15510
D+C RED 2	16185
D+C RED 3	45430
D+C RED 6	15850
D+C RED 7	15850
D+C RED 8	15585
D+C RED 9	15585
D+C RED 10	15630
D+C RED 11	15630
D+C RED 12	15630
D+C RED 17	26100
D+C RED 19	45170
D+C RED 21	45380
D+C RED 22	45380
D+C RED 30	73360
D+C RED 31	15800
D+C RED 33	17200
D+C RED 34	15880
D+C RED 36	12085
D+C YELLOW 51	19140
D+C YELLOW 6	15985
D+C YELLOW 7	45350
D+C YELLOW 8	45350
D+C YELLOW 10	47005
D+C YELLOW 11	47000
*EXT. D+C GREEN 1	59040
EXT. D+C YELLOW 1	13065
EXT. D+C YELLOW 7	10316
PIGMENT YELLOW 1	11680
PIGMENT YELLOW 3	11710
PIGMENT YELLOW 12	21090
PIGMENT YELLOW 14	21095
PIGMENT ORANGE 13	21110
PIGMENT RED 3	12120
PIGMENT RED 4	12085
PIGMENT RED 6	12090
BARIUM PIGMENT RED 49	15630
SODIUM PIGMENT RED 49	15630
BARIUM PIGMENT RED 53	15585
*SODIUM PIGMENT RED 53	15585
CALCIUM PIGMENT RED 57	15850
PIGMENT RED 63	15880
PMA PIGMENT RED 81	45160
PTA PIGMENT RED 81	45160
FUGITIVE PIGMENT VIOLET 3	42535
PMA PIGMENT VIOLET 3	42535
PTA PIGMENT VIOLET 3	42535
PMA PIGMENT BLUE 1	42595
PTA PIGMENT BLUE 2	44045
PMA PIGMENT BLUE 9	42025
PMA PIGMENT GREEN 2	42040
PMA PIGMENT GREEN 2	49005
PTA PIGMENT GREEN 2	42040
PTA PIGMENT GREEN 2	49005
*PMA PIGMENT GREEN 4	42000
*PTA PIGMENT GREEN 4	42000
PIGMENT BROWN 3	21010
LAKE ACID YELLOW 23	19140
*LAKE PIGMENT ORANGE 17	15510
LAKE PIGMENT RED 60	16105
LAKE PIGMENT RED 83	58000
LAKE PIGMENT VIOLET 5	58055
LAKE PIGMENT BLUE 24	42090
NATURAL RED 6	75330

*LAST LISTED IN 1972

TABLE C-1. DYES AND PIGMENTS MANUFACTURED IN 1973 (CONTINUED)
C. LEVER COMPANY, INC.

DYE OR PIGMENT NAME	COLOR INDEX
PIGMENT BASIC YELLOW 2	41000
PIGMENT BASIC YELLOW 37	41001
PIGMENT DIRECT YELLOW 6	40001
PIGMENT DIRECT YELLOW 11	40000
PIGMENT ACID ORANGE 8	15575
PMA PIGMENT RED 81	45160
PIGMENT DIRECT RED 81	28160
PMA PIGMENT VIOLET 9	42510
PMA PIGMENT BLUE 7	58055
*PTA PIGMENT BLUE 7	58055
PTA PIGMENT BLUE 10	44040
PIGMENT ACID BROWN 14	20195
*LAKE ACID BLUE 93	42780
LAKE ACID BLUE 104	42735

*LAST LISTED IN 1972

TABLE C-1. DYES AND PIGMENTS MANUFACTURED IN 1973 (CONTINUED)
MAGRUDER COLOR COMPANY, INC.

DYE OR PIGMENT NAME	COLOR INDEX
BARIUM PIGMENT RED 53	15585
CALCIUM PIGMENT RED 57	15850
FUGITIVE PIGMENT RED 81	45160
PMA PIGMENT RED 81	45160
PTA PIGMENT RED 81	45160
PMA PIGMENT VIOLET 1	45170
PTA PIGMENT VIOLET 1	42170
FUGITIVE PIGMENT VIOLET 3	42535
PMA PIGMENT VIOLET 3	42535
PMA PIGMENT BLUE 1	42595
PTA PIGMENT BLUE 1	42595
PTA PIGMENT BLUE 9	42025
ALPHA PIGMENT BLUE 15	74160
BETA PIGMENT BLUE 15	74160
PTA PIGMENT GREEN 1	42040
PMA PIGMENT GREEN 2	42040
PMA PIGMENT GREEN 2	49005
PMA PIGMENT GREEN 4	42000
PTA PIGMENT GREEN 4	42000
*LAKE ACID YELLOW 23	19140

*LAST LISTED IN 1972

TABLE C-1. DYES AND PIGMENTS MANUFACTURED IN 1973 (CONTINUED)
MARTIN-MARIETTA CHEMICALS, SODYECO DIVISION

DYE OR PIGMENT NAME	COLOR INDEX	DYE OR PIGMENT NAME	COLOR INDEX
DISPERSE YELLOW 42	10338	VAT GREEN 9	59850
*DISPERSE YELLOW 54	47020	PIGMENT VIOLET 23	51319
DISPERSE YELLOW 123	NONE		
*DISPERSE ORANGE 5	11100		
DISPERSE ORANGE 94	NONE		
DISPERSE RED 60	60756		
DISPERSE RED 177	NONE		
*DISPERSE BLUE 62	NONE		
DISPERSE BROWN 1	11152		
LEUCO SULFUR YELLOW 1	53040		
LEUCO SULFUR YELLOW 2	53120		
SULFUR YELLOW 4	53160		
LEUCO SULFUR YELLOW 4	53160		
*LEUCO SULFUR RED 5	53830		
*SULFUR RED 6	53720		
LEUCO SULFUR RED 10	53228		
SULFUR BLUE 7	53440		
LEUCO SULFUR BLUE 7	53440		
SOLUBILIZED SULFUR BLUE 7	53441		
SULFUR BLUE 8	NONE		
LEUCO SULFUR BLUE 8	NONE		
*SULFUR BLUE 9	53430		
LEUCO SULFUR BLUE 1	53235		
SULFUR GREEN 2	53571		
LEUCO SULFUR GREEN 2	53571		
LEUCO SULFUR GREEN 3	53570		
SULFUR GREEN 14	NONE		
LEUCO SULFUR GREEN 16	NONE		
LEUCO SULFUR BROWN 3	NONE		
*SULFUR BROWN 10	53055		
LEUCO SULFUR BROWN 10	53055		
SOLUBILIZED SULFUR BROWN 10	53056		
*SULFUR BROWN 12	53721		
SULFUR BROWN 14	53246		
LEUCO SULFUR BROWN 14	53246		
LEUCO SULFUR BROWN 37	NONE		
*SOLUBILIZED SULFUR BROWN 37	NONE		
SULFUR BROWN 52	53320		
SULFUR BLACK 1	53185		
LEUCO SULFUR BLACK 1	53185		
SULFUR BLACK 2	53195		
LEUCO SULFUR BLACK 2	53195		
SOLUBILIZED SULFUR BLACK 2	53196		
LEUCO SULFUR BLACK 10	53190		
LEUCO SULFUR BLACK 11	53290		
LEUCO SULFUR BLACK 11	53290		
VAT BLUE 20	59800		
VAT BLUE 43	53630		

*LAST LISTED IN 1972

TABLE C-1. DYES AND PIGMENTS MANUFACTURED IN 1973 (CONTINUED)
OTTO B. MAY, INC.

DYE OR PIGMENT NAME	COLOR INDEX
DISPERSE ORANGE 77	NONE
DISPERSE ORANGE 78	NONE
DISPERSE ORANGE 79	NONE
DISPERSE ORANGE 80	NONE
DISPERSE BLUE 79	NONE
DISPERSE BLUE 109	NONE
DISPERSE BLUE 156	NONE
*VAT VIOLET 1	60010
VAT VIOLET 9	60005
VAT BLUE 18	59815
VAT BLUE 20	59800
VAT GREEN 1	59825
VAT GREEN 3	69500
VAT GREEN 9	59850
VAT BROWN 1	70800
VAT BROWN 11	NONE
VAT BROWN 13	NONE
VAT BLACK 9	65230
VAT BLACK 25	69525
VAT BLACK 27	69005

*LAST LISTED IN 1972

TABLE C-1. DYES AND PIGMENTS MANUFACTURED IN 1973 (CONTINUED)
MAX MARX COLOR + CHEMICAL COMPANY

DYE OR PIGMENT NAME	COLOR INDEX
ACID YELLOW 23	19140
MORDANT RED 9	16105
PIGMENT BASIC YELLOW 2	41000
PIGMENT ORANGE 16	21160
PIGMENT RED 22	12315
PIGMENT RED 4	12085
BARIUM PIGMENT RED 53	15585
PMA PIGMENT RED 81	45160
PTA PIGMENT RED 81	45160
PMA PIGMENT VIOLET 1	45170
*PTA PIGMENT VIOLET 1	42170
PMA PIGMENT VIOLET 3	42535
PTA PIGMENT VIOLET 3	42535
PMA PIGMENT BLUE 1	42595
PMA PIGMENT GREEN 1	42040
PMA PIGMENT GREEN 2	42040
PMA PIGMENT GREEN 2	49005
PTA PIGMENT GREEN 2	42040
PTA PIGMENT GREEN 2	49005
*FUGITIVE PIGMENT GREEN 4	42000
LAKE ACID YELLOW 23	19140
LAKE PIGMENT RED 60	16105
LAKE PIGMENT RED 83	58000
NATURAL RED 6	75330

*LAST LISTED IN 1972

TABLE C-1. DYES AND PIGMENTS MANUFACTURED IN 1973 (CONTINUED)
MOBAY CHEMICAL CO., VERONA DIVISION

DYE OR PIGMENT NAME	COLOR INDEX	DYE OR PIGMENT NAME	COLOR INDEX	DYE OR PIGMENT NAME	COLOR INDEX
ACID YELLOW 11	18820	AZOIC BROWN 9	NONE	*DIRECT BLUE 2	22590
ACID YELLOW 17	18965	BASIC YELLOW 11	48055	DIRECT BLUE 15	24400
ACID YELLOW 19	NONE	BASIC YELLOW 13	NONE	DIRECT BLUE 76	24411
ACID YELLOW 23	19140	BASIC YELLOW 21	NONE	DIRECT BLUE 80	NONE
ACID YELLOW 40	18950	BASIC YELLOW 28	NONE	DIRECT BLUE 98	23155
ACID YELLOW 42	22910	BASIC YELLOW 29	NONE	DIRECT BLUE 126	34010
*ACID YELLOW 44	23900	BASIC ORANGE 21	48035	DIRECT BLUE 218	24401
ACID YELLOW 49	NONE	*BASIC ORANGE 27	NONE	DIRECT GREEN 45	NONE
ACID YELLOW 54	19010	BASIC ORANGE 28	NONE	DIRECT BROWN 111	NONE
ACID YELLOW 59	NONE	BASIC RED 13	48015	DIRECT BLACK 22	35435
ACID YELLOW 79	NONE	BASIC RED 14	NONE	DISPERSE YELLOW 74	NONE
ACID YELLOW 99	13900	BASIC RED 18	11085	DISPERSE YELLOW 77	NONE
ACID YELLOW 151	13906	BASIC RED 23	NONE	DISPERSE YELLOW 93	NONE
ACID YELLOW 159	NONE	BASIC VIOLET 16	48013	DISPERSE YELLOW 95	NONE
ACID YELLOW 174	NONE	BASIC BLUE 1	42025	DISPERSE YELLOW 96	NONE
ACID ORANGE 7	15510	BASIC BLUE 5	42140	DISPERSE ORANGE 65	NONE
ACID ORANGE 8	15575	BASIC BLUE 45	NONE	DISPERSE ORANGE 66	NONE
ACID ORANGE 10	16230	BASIC BLUE 47	NONE	DISPERSE ORANGE 67	NONE
ACID ORANGE 60	18732	BASIC BLUE 69	NONE	DISPERSE RED 55	NONE
*ACID ORANGE 116	NONE	BASIC GREEN 4	42000	DISPERSE RED 60	60756
ACID RED 1	18050	BASIC BLACK 9	NONE	DISPERSE RED 82	NONE
ACID RED 4	14710	DIRECT YELLOW 4	24890	DISPERSE RED 90	NONE
ACID RED 73	27290	DIRECT YELLOW 11	40000	DISPERSE RED 105	NONE
*ACID RED 85	22245	DIRECT YELLOW 44	29000	DISPERSE RED 133	NONE
ACID RED 114	23635	DIRECT YELLOW 50	29025	DISPERSE RED 139	NONE
ACID RED 151	26900	DIRECT YELLOW 84	NONE	DISPERSE RED 159	NONE
ACID RED 186	18810	DIRECT YELLOW 132	NONE	DISPERSE VIOLET 40	NONE
ACID RED 225	NONE	DIRECT ORANGE 29	29155	DISPERSE BLUE 56	63285
ACID RED 266	NONE	DIRECT ORANGE 67	NONE	DISPERSE BLUE 71	NONE
ACID RED 277	NONE	DIRECT ORANGE 72	NONE	DISPERSE BLUE 81	NONE
ACID RED 278	NONE	DIRECT ORANGE 73	25200	DISPERSE BLUE 138	NONE
ACID RED 337	NONE	DIRECT ORANGE 78	NONE	DISPERSE BLUE 139	NONE
ACID VIOLET 7	18055	DIRECT ORANGE 80	NONE	DISPERSE BLUE 165	NONE
*ACID BLUE 7	42080	DIRECT ORANGE 81	NONE	DISPERSE BROWN 8	NONE
ACID BLUE 25	62055	DIRECT RED 4	29165	REACTIVE YELLOW 25	NONE
ACID BLUE 27	61530	DIRECT RED 23	29160	REACTIVE RED 40	NONE
ACID BLUE 40	62125	DIRECT RED 24	29185	REACTIVE RED 41	NONE
ACID BLUE 158	14880	DIRECT RED 26	29190	REACTIVE BLUE 29	NONE
ACID BLUE 158	15050	DIRECT RED 79	29065	*REACTIVE BLUE 30	NONE
*ACID BLUE 198	NONE	DIRECT RED 80	35780	FLUORESCENT BRIGHTENER 28	40622
ACID BLUE 203	NONE	DIRECT RED 81	28160	FLUORESCENT BRIGHTENER 102	NONE
ACID BLUE 221	NONE	*DIRECT RED 83	29225	FLUORESCENT BRIGHTENER 114	NONE
ACID GREEN 25	61570	DIRECT RED 95	NONE	INGRAIN BLUE 2	74160
ACID GREEN 41	62560	DIRECT RED 122	29210	MORDANT YELLOW 26	22880
ACID GREEN 84	NONE	DIRECT RED 139	NONE	MORDANT YELLOW 30	18710
ACID BLACK 52	15711	DIRECT RED 209	NONE	MORDANT BROWN 21	19600
ACID BLACK 139	NONE	DIRECT RED 212	NONE	MORDANT BLACK 1	15710
ACID BLACK 172	NONE	DIRECT BLUE 1	24410	MORDANT BLACK 8	NONE

*LAST LISTED IN 1972

TABLE C-1. DYES AND PIGMENTS MANUFACTURED IN 1973 (CONTINUED)
MOBAY CHEMICAL CO., VERONA DIVISION (CONTINUED)

DYE OR PIGMENT NAME	COLOR INDEX	DYE OR PIGMENT NAME
MORDANT BLACK 9	16500	
MORDANT BLACK 11	14645	
VAT YELLOW 2	67300	
VAT YELLOW 4	59100	
VAT YELLOW 33	NONE	
VAT ORANGE 1	59105	
VAT ORANGE 15	69025	
VAT VIOLET 21	NONE	
VAT GREEN 32	NONE	
VAT BROWN 3	69015	

*LAST LISTED IN 1972

TABLE C-1. DYES AND PIGMENTS MANUFACTURED IN 1973 (CONTINUED)
MORTON-NORWICH PRODUCTS, INC.

DYE OR PIGMENT NAME	COLOR INDEX
SOLVENT YELLOW 107	NONE
SOLVENT RED 154	NONE
SOLVENT RED 166	NONE
SOLVENT VIOLET 13	60725
SOLVENT VIOLET 14	61705
SOLVENT BLUE 99	NONE
SOLVENT BLUE 100	NONE
SOLVENT GREEN 3	61565

TABLE C-1. DYES AND PIGMENTS MANUFACTURED IN 1973 (CONTINUED)
NYANZA, INC.

DYE OR PIGMENT NAME	COLOR INDEX	DYE OR PIGMENT NAME	COLOR INDEX	DYE OR PIGMENT NAME
ACID DYE 0	13010	DIRECT RED 153	28210	
ACID YELLOW 11	18820	DIRECT BLUE 1	24410	
ACID YELLOW 17	18965	DIRECT BLUE 22	24280	
ACID YELLOW 19	NONE	DIRECT BLUE 78	34200	
ACID YELLOW 99	13900	DISPERSE RED 15	60710	
*ACID ORANGE 51	26550	MORDANT RED 7	18760	
ACID ORANGE 60	18732	MORDANT BLUE 19	NONE	
ACID ORANGE 74	18745	MORDANT BROWN 1	20110	
*ACID ORANGE 86	NONE	MORDANT BROWN 40	17590	
ACID ORANGE 115	NONE			
ACID RED 4	14710			
ACID RED 151	26900			
ACID RED 182	NONE			
ACID RED 186	18810			
ACID VIOLET 1	17025			
ACID VIOLET 7	18055			
ACID VIOLET 12	18075			
ACID VIOLET 41	62020			
ACID VIOLET 43	60730			
ACID BLUE 25	62055			
ACID BLUE 27	61530			
ACID BLUE 40	62125			
ACID BLUE 41	62130			
ACID BLUE 45	63010			
ACID BLUE 62	62045			
*ACID BLUE 63	NONE			
ACID BLUE 113	26360			
ACID BLUE 127	61135			
ACID BLUE 158	14880			
ACID BLUE 158	15050			
ACID BROWN 51	NONE			
ACID BLACK 58	NONE			
ACID BLACK 140	NONE			
DIRECT YELLOW 12	24895			
DIRECT ORANGE 34	40215			
DIRECT ORANGE 34	40220			
DIRECT ORANGE 37	40260			
DIRECT ORANGE 37	40265			
DIRECT ORANGE 39	40215			
DIRECT RED 75	25380			
DIRECT RED 79	29065			
DIRECT RED 80	35780			
DIRECT RED 81	28160			
DIRECT RED 120	25275			
DIRECT RED 127	28215			
DIRECT BLACK 127	28240			
DIRECT RED 149	29110			
DIRECT RED 152	28360			

*LAST LISTED IN 1972

TABLE C-1. DYES AND PIGMENTS MANUFACTURED IN 1973 (CONTINUED)
PASSAIC COLOR + CHEMICAL COMPANY

DYE OR PIGMENT NAME	COLOR INDEX
ACID ORANGE 12	15970
ACID RED 73	27290
ACID BLACK 53	NONE
BASIC ORANGE 1	11320
BASIC ORANGE 2	11270
BASIC BROWN 1	21000
BASIC BROWN 4	21010
*SOLVENT YELLOW 2	11020
SOLVENT YELLOW 3	11160
SOLVENT YELLOW 14	12055
SOLVENT YELLOW 30	21240
SOLVENT YELLOW 56	11021
SOLVENT ORANGE 2	12100
SOLVENT ORANGE 3	11270
SOLVENT ORANGE 7	12140
SOLVENT RED 1	12150
SOLVENT RED 24	26105
SOLVENT RED 26	26120
SOLVENT RED 27	26125
SOLVENT BROWN 12	21010
SOLVENT BROWN 22	NONE
SOLVENT BLACK 7	50415

*LAST LISTED IN 1972

TABLE C-1. DYES AND PIGMENTS MANUFACTURED IN 1973 (CONTINUED)
PFISTER CHEMICAL, INC.

DYE OR PIGMENT NAME	COLOR INDEX
AZOIC COUPLING 2	37505
AZOIC COUPLING 3	37575
AZOIC COUPLING 7	37565
AZOIC COUPLING 8	37525
AZOIC COUPLING 10	37510
AZOIC COUPLING 11	37535
AZOIC COUPLING 12	37550
AZOIC COUPLING 14	37558
*AZOIC COUPLING 15	37600
AZOIC COUPLING 17	37515
AZOIC COUPLING 18	37520
AZOIC COUPLING 19	37545
AZOIC COUPLING 20	37530
AZOIC COUPLING 21	37526
AZOIC COUPLING 24	37540
AZOIC COUPLING 29	37527
AZOIC COUPLING 34	37531
AZOIC COUPLING 35	37615
AZOIC COUPLING 3	NONE

*LAST LISTED IN 1972

TABLE C-1. DYES AND PIGMENTS MANUFACTURED IN 1973 (CONTINUED)
PPG INDUSTRIES, INC.

DYE OR PIGMENT NAME	COLOR INDEX
PIGMENT YELLOW 3	11710
PIGMENT RED 3	12120
BARIUM PIGMENT RED 49	15630
*PMA PIGMENT VIOLET 3	42535

*LAST LISTED IN 1972

TABLE C-1. DYES AND PIGMENTS MANUFACTURED IN 1973 (CONTINUED)
RIDGEWAY COLOR + CHEMICAL

DYE OR PIGMENT NAME	COLOR INDEX
PIGMENT YELLOW 1	11680
PIGMENT YELLOW 12	21090
PIGMENT YELLOW 14	21095
PIGMENT YELLOW 17	21105
PIGMENT ORANGE 13	21110
DARK PIGMENT RED 1	12070
PIGMENT RED 4	12085
PIGMENT RED 48	15865
BARIUM PIGMENT RED 49	15630
CALCIUM PIGMENT RED 49	15630
*PIGMENT RED 52	15860
BARIUM PIGMENT RED 53	15585
CALCIUM PIGMENT RED 57	15850
PTA PIGMENT RED 81	45160
PIGMENT RED 90	45380
*PTA PIGMENT VIOLET 1	42170
FUGITIVE PIGMENT VIOLET 3	42535
PMA PIGMENT VIOLET 3	42535
*PTA PIGMENT VIOLET 3	42535
*PTA PIGMENT BLUE 1	42595
BETA PIGMENT BLUE 15	74160
PIGMENT BLUE 19	42750
*PTA PIGMENT GREEN 2	42040
*PTA PIGMENT GREEN 2	49005
*PTA PIGMENT GREEN 4	42000
LAKE PIGMENT BLUE 24	42090

*LAST LISTED IN 1972

TABLE C-1. DYES AND PIGMENTS MANUFACTURED IN 1973 (CONTINUED)
SANDOZ-WANDER, INC.

DYE OR PIGMENT NAME	COLOR INDEX
FLUORESCENT BRIGHTENER 49	NONE
FLUORESCENT BRIGHTENER 52	NONE
SOLVENT BLUE 3	42775
PIGMENT YELLOW 1	11680
PIGMENT YELLOW 12	21090
PIGMENT YELLOW 14	21095
PIGMENT YELLOW 85	NONE
PIGMENT ORANGE 13	21110
PIGMENT RED 5	12490
PIGMENT RED 7	12420
PIGMENT RED 9	12460
PIGMENT RED 17	12390
PIGMENT RED 48	15865
*PTA PIGMENT RED 81	45160
PIGMENT BLUE 25	21180
PMA PIGMENT GREEN 1	42040
PMA PIGMENT GREEN 2	42040
PMA PIGMENT GREEN 2	49005
*PTA PIGMENT GREEN 2	42040
*PTA PIGMENT GREEN 2	49005
PIGMENT BROWN 1	12480
LAKE PIGMENT VIOLET 5	58055

*LAST LISTED IN 1972

TABLE C-1. DYES AND PIGMENTS MANUFACTURED IN 1973 (CONTINUED)
SHERWIN WILLIAMS COMPANY

DYE OR PIGMENT NAME	COLOR INDEX
PIGMENT BLUE 19	42750

TABLE C-1. DYES AND PIGMENTS MANUFACTURED IN 1973 (CONTINUED)
SOJ-TEX CHEMICAL COMPANY, INC.

DYE OR PIGMENT NAME	COLOR INDEX
LEUCO SULFUR YELLOW 9	53010
SULFUR ORANGE 1	53050
SULFUR RED 5	53830
*LEUCO SULFUR BLUE 7	53440
LEUCO SULFUR BROWN 1	53000
SOLUBILIZED SULFUR BROWN 1	53001
LEUCO SULFUR BROWN 10	53055
LEUCO SULFUR BROWN 20	53680
SULFUR BROWN 26	53090
*LEUCO SULFUR BROWN 26	53090
LEUCO SULFUR BLACK 1	53185
SOLUBILIZED SULFUR BLACK 1	53186

*LAST LISTED IN 1972

TABLE C-1. DYES AND PIGMENTS MANUFACTURED IN 1973 (CONTINUED)
STANGE COMPANY

DYE OR PIGMENT NAME	COLOR INDEX
FD+C RED 2	16185
FD+C RED 3	45430
FD+C RED 4	14700
FD+C YELLOW 5	19140
FD+C YELLOW 6	15985

TABLE C-1. DYES AND PIGMENTS MANUFACTURED IN 1973 (CONTINUED)
STERLING DRUG INC., HILTON-DAVIS CHEMICAL COMPANY

DYE OR PIGMENT NAME	COLOR INDEX
*ACID YELLOW 4	18695
ACID YELLOW 17	18965
ACID YELLOW 73	45350
ACID RED 1	18050
ACID RED 87	45380
ACID RED 88	15620
ACID VIOLET 17	42650
ACID VIOLET 49	42640
ACID BLUE 7	42080
ACID BLUE 9	42090
ACID GREEN 16	44025
AZOIC YELLOW 1	37610
AZOIC YELLOW 1	37090
AZOIC RED 1	37558
AZOIC RED 1	37090
AZOIC RED 6	37520
AZOIC RED 6	37090
AZOIC BLUE 3	NONE
BASE AZOIC DIAZOIC 4	37210
BASE AZOIC DIAZOIC 8	37110
BASE AZOIC DIAZOIC 12	37105
SALT AZOIC DIAZOIC 1	37135
SALT AZOIC DIAZOIC 3	37010
SALT AZOIC DIAZOIC 5	37125
SALT AZOIC DIAZOIC 9	37040
SALT AZOIC DIAZOIC 12	37105
SALT AZOIC DIAZOIC 13	37130
SALT AZOIC DIAZOIC 28	37151
*SALT AZOIC DIAZOIC 48	37235
AZOIC COUPLING 7	37565
BASIC VIOLET 3	42555
BASIC BLUE 1	42025
BASIC BLUE 5	42140
BASIC BLUE 7	42595
BASIC BLUE 11	44040
BASIC BLUE 26	44045
DIRECT YELLOW 11	40000
DIRECT RED 80	35780
*DIRECT BLUE 86	74180
DISPERSE YELLOW 54	47020
FLUORESCENT BRIGHTENER 9	40621
FLUORESCENT BRIGHTENER 28	40622
FLUORESCENT BRIGHTENER 126	NONE
FLUORESCENT BRIGHTENER 128	NONE
FLUORESCENT BRIGHTENER 130	NONE
FD+C BLUE 1	42090
FD+C BLUE 2	73015
FD+C RED 2	16185
FD+C RED 3	45430
FD+C VIOLET 1	42640
FD+C YELLOW 6	15985
D+C GREEN 8	10020
D+C RED 22	45380
*D+C RED 39	13058
PIGMENT YELLOW 1	11680
PIGMENT YELLOW 74	11741
PIGMENT YELLOW 12	21090
PIGMENT YELLOW 13	21100
PIGMENT YELLOW 14	21095
PIGMENT YELLOW 17	21105
PIGMENT ORANGE 5	12075
PIGMENT ORANGE 16	21160
PIGMENT ORANGE 34	21115
PIGMENT RED 5	12490
PIGMENT RED 23	12355
LIGHT PIGMENT RED 1	12070
PIGMENT RED 3	12120
PIGMENT RED 4	12085
BARIUM PIGMENT RED 49	15630
CALCIUM PIGMENT RED 49	15630
SODIUM PIGMENT RED 49	15630
BARIUM PIGMENT RED 53	15585
CALCIUM PIGMENT RED 54	14830
CALCIUM PIGMENT RED 57	15850
PTA PIGMENT RED 81	45160
PIGMENT RED 90	45380
PMA PIGMENT VIOLET 3	42535
PMA PIGMENT BLUE 10	44040
ALPHA PIGMENT BLUE 15	74160
BETA PIGMENT BLUE 15	74160
LAKE PIGMENT BLUE 24	42090

*LAST LISTED IN 1972

TABLE C-1. DYES AND PIGMENTS MANUFACTURED IN 1973 (CONTINUED)
STERLING DRUG INC., THOMASSET COLORS DIVISION

DYE OR PIGMENT NAME	COLOR INDEX
D+C ORANGE 4	15510
D+C ORANGE 5	45370
D+C ORANGE 10	45425
D+C RED 3	45430
D+C RED 6	15850
D+C RED 7	15850
D+C RED 9	15585
D+C RED 12	15630
D+C RED 13	15630
D+C RED 19	45170
D+C RED 21	45380
D+C RED 27	45410
*D+C RED 28	45410
D+C RED 30	73360
D+C RED 36	12085
D+C YELLOW 51	19140
ALPHA PIGMENT BLUE 15	74160
BETA PIGMENT BLUE 15	74160
PIGMENT GREEN 7	74260

*LAST LISTED IN 1972

TABLE C-1. DYES AND PIGMENTS MANUFACTURED IN 1973 (CONTINUED)
SUN CHEMICAL CORPORATION

DYE OR PIGMENT NAME	COLOR INDEX
*D+C ORANGE 4	15510
D+C ORANGE 5	45370
D+C ORANGE 17	12075
D+C RED 6	15850
D+C RED 7	15850
D+C RED 8	15585
D+C RED 9	15585
D+C RED 10	15630
D+C RED 11	15630
D+C RED 12	15630
D+C RED 13	15630
D+C RED 19	45170
D+C RED 21	45380
D+C RED 34	15880
PIGMENT YELLOW 1	11680
PIGMENT YELLOW 3	11710
*PIGMENT YELLOW 9	11720
PIGMENT YELLOW 73	11738
PIGMENT YELLOW 74	11741
PIGMENT YELLOW 12	21090
PIGMENT YELLOW 13	21100
PIGMENT YELLOW 14	21095
PIGMENT YELLOW 17	21105
*PIGMENT ORANGE 2	12060
PIGMENT ORANGE 5	12075
PIGMENT ORANGE 13	21110
PIGMENT ORANGE 16	21160
PIGMENT ORANGE 34	21115
PIGMENT RED 13	12395
PIGMENT RED 17	12390
PIGMENT RED 22	12315
PIGMENT RED 23	12355
PIGMENT RED 31	12360
*DARK PIGMENT RED 1	12070
*LIGHT PIGMENT RED 1	12070
PIGMENT RED 3	12120
*PIGMENT RED 4	12085
PIGMENT RED 38	21120
PIGMENT RED 48	15865
BARIUM PIGMENT RED 49	15630
CALCIUM PIGMENT RED 49	15630
SODIUM PIGMENT RED 49	15630
PIGMENT RED 52	15860
BARIUM PIGMENT RED 53	15585
CALCIUM PIGMENT RED 57	15850
PIGMENT RED 63	15880
PIGMENT RED 77	15826
PMA PIGMENT RED 81	45160
PTA PIGMENT RED 81	45160
PIGMENT RED 122	73915
PMA PIGMENT VIOLET 1	45170
PTA PIGMENT VIOLET 1	42170
PMA PIGMENT VIOLET 3	42535
PIGMENT VIOLET 19	46500
PIGMENT VIOLET 23	51319
PMA PIGMENT BLUE 1	42595
ALPHA PIGMENT BLUE 15	74160
BETA PIGMENT BLUE 15	74160
*PIGMENT BLUE 25	21180
PIGMENT GREEN 7	74260
*PIGMENT GREEN 10	12775
PIGMENT GREEN 36	74160
*PIGMENT GREEN 38	NONE
*PIGMENT BROWN 5	15800
LAKE PIGMENT RED 60	16105
LAKE PIGMENT RED 81	45160

*LAST LISTED IN 1972

TABLE C-1. DYES AND PIGMENTS MANUFACTURED IN 1973 (CONTINUED)
SYNALLOY CORPORATION, BLACKMAN-UHLER CHEMICAL DIV.

DYE OR PIGMENT NAME	COLOR INDEX
AZOIC YELLOW 2	37610
AZOIC YELLOW 2	37120
AZOIC YELLOW 3	37610
AZOIC YELLOW 3	37558
AZOIC YELLOW 3	37090
AZOIC ORANGE 3	37558
AZOIC ORANGE 3	37010
AZOIC ORANGE 10	37505
AZOIC ORANGE 10	37050
AZOIC RED 1	37558
AZOIC RED 1	37090
AZOIC RED 2	37530
AZOIC RED 2	37120
AZOIC RED 6	37520
AZOIC RED 6	37090
AZOIC VIOLET 1	37505
AZOIC VIOLET 1	37165
AZOIC BLUE 3	NONE
AZOIC BROWN 7	37600
AZOIC BROWN 7	37120
AZOIC BROWN 9	NONE
AZOIC BROWN 10	37550
AZOIC BROWN 10	37120
AZOIC BLACK 4	NONE
BASE AZOIC DIAZOIC 2	37005
BASE AZOIC DIAZOIC 3	37010
BASE AZOIC DIAZOIC 4	37210
BASE AZOIC DIAZOIC 10	37120
BASE AZOIC DIAZOIC 12	37105
BASE AZOIC DIAZOIC 13	37130
BASE AZOIC DIAZOIC 28	37151
BASE AZOIC DIAZOIC 32	37090
BASE AZOIC DIAZOIC 44	37000
SALT AZOIC DIAZOIC 1	37135
SALT AZOIC DIAZOIC 2	37005
SALT AZOIC DIAZOIC 3	37010
SALT AZOIC DIAZOIC 5	37125
SALT AZOIC DIAZOIC 6	37025
SALT AZOIC DIAZOIC 8	37110
SALT AZOIC DIAZOIC 9	37040
SALT AZOIC DIAZOIC 10	37120
SALT AZOIC DIAZOIC 11	37085
SALT AZOIC DIAZOIC 12	37105
SALT AZOIC DIAZOIC 13	37130
*SALT AZOIC DIAZOIC 20	37175
SALT AZOIC DIAZOIC 28	37151
SALT AZOIC DIAZOIC 35	37255
SALT AZOIC DIAZOIC 41	37165
SALT AZOIC DIAZOIC 44	37000
*SALT AZOIC DIAZOIC 48	37235
SALT AZOIC DIAZOIC 49	37050
AZOIC COUPLING 2	37505
AZOIC COUPLING 3	37575
AZOIC COUPLING 4	37560
AZOIC COUPLING 5	37610
AZOIC COUPLING 7	37565
AZOIC COUPLING 8	37525
AZOIC COUPLING 11	37535
AZOIC COUPLING 12	37550
AZOIC COUPLING 14	37558
AZOIC COUPLING 15	37600
AZOIC COUPLING 16	37605
AZOIC COUPLING 17	37515
AZOIC COUPLING 18	37520
AZOIC COUPLING 19	37545
AZOIC COUPLING 20	37530
AZOIC COUPLING 21	37526
AZOIC COUPLING 29	37527
AZOIC COUPLING 34	37531
AZOIC COUPLING 35	37615
AZOIC COUPLING 36	37585
AZOIC COUPLING 3	NONE
DISPERSE YELLOW 42	10338
DISPERSE YELLOW 64	47023
DISPERSE ORANGE 5	11100
DISPERSE ORANGE 62	NONE
DISPERSE RED 4	60755
*DISPERSE RED 11	62015
*PIGMENT YELLOW 13	21100
PIGMENT YELLOW 14	21095
PIGMENT YELLOW 17	21105
PIGMENT ORANGE 34	21115
PIGMENT RED 23	12355
PIGMENT VIOLET 23	51319
BETA PIGMENT BLUE 15	74160
PIGMENT BROWN 5	15800

*LAST LISTED IN 1972

TABLE C-1. DYES AND PIGMENTS MANUFACTURED IN 1973 (CONTINUED)
TENNECO, INC., CAL/INK DIVISION

DYE OR PIGMENT NAME	COLOR INDEX
*PIGMENT YELLOW 5	11660
PIGMENT YELLOW 6	11670
PIGMENT YELLOW 73	11738
PIGMENT YELLOW 12	21090
PIGMENT YELLOW 14	21095
PIGMENT RED 3	12120
BARIUM PIGMENT RED 49	15630
PIGMENT RED 52	15860
BARIUM PIGMENT RED 53	15585
CALCIUM PIGMENT RED 57	15850
RHA PIGMENT VIOLET 3	42535
BETA PIGMENT BLUE 15	74160
PIGMENT GREEN 7	74260

*LAST LISTED IN 1972

TABLE C-1. DYES AND PIGMENTS MANUFACTURED IN 1973 (CONTINUED)
TOMS RIVER CHEMICAL CORPORATION

DYE OR PIGMENT NAME	COLOR INDEX	DYE OR PIGMENT NAME	COLOR INDEX	DYE OR PIGMENT NAME	COLOR INDEX
ACID YELLOW 14	18960	ACID RED 194	NONE	BASIC YELLOW 11	48055
ACID YELLOW 17	18965	ACID RED 201	18761	BASIC ORANGE 1	11320
ACID YELLOW 23	19140	ACID RED 212	NONE	BASIC ORANGE 2	11270
ACID YELLOW 29	18900	ACID RED 213	NONE	BASIC ORANGE 21	48035
ACID YELLOW 36	13065	ACID RED 266	NONE	BASIC RED 13	48015
ACID YELLOW 40	18950	ACID RED 299	NONE	BASIC RED 15	NONE
ACID YELLOW 54	19010	ACID RED 309	NONE	BASIC RED 22	NONE
ACID YELLOW 65	14170	ACID RED 337	NONE	BASIC RED 46	NONE
ACID YELLOW 76	18850	ACID VIOLET 3	16580	BASIC VIOLET 16	48013
ACID YELLOW 99	13900	ACID VIOLET 6	16600	BASIC BLUE 41	11154
ACID YELLOW 114	NONE	ACID VIOLET 7	18055	BASIC BROWN 1	21000
ACID YELLOW 127	NONE	ACID VIOLET 49	42640	BASIC BROWN 4	21010
ACID YELLOW 128	NONE	ACID BLUE 23	61125	DIRECT YELLOW 4	24890
ACID YELLOW 129	NONE	ACID BLUE 25	62055	DIRECT YELLOW 6	40001
ACID YELLOW 151	13906	ACID BLUE 40	62125	DIRECT YELLOW 11	40000
ACID YELLOW 159	NONE	*ACID BLUE 43	53000	DIRECT YELLOW 12	24895
*ACID YELLOW 174	NONE	ACID BLUE 43	53000	*DIRECT YELLOW 20	22410
ACID YELLOW 179	NONE	ACID BLUE 45	63010	DIRECT YELLOW 28	19555
ACID ORANGE 7	15510	ACID BLUE 78	62105	DIRECT YELLOW 39	NONE
ACID ORANGE 8	15575	ACID BLUE 80	61585	DIRECT YELLOW 44	29000
ACID ORANGE 10	16230	*ACID BLUE 90	42655	DIRECT YELLOW 50	29025
ACID ORANGE 24	20170	ACID BLUE 113	26360	DIRECT YELLOW 84	NONE
ACID ORANGE 51	26550	ACID BLUE 158	14880	DIRECT YELLOW 105	NONE
ACID ORANGE 60	18732	ACID BLUE 158	15050	DIRECT YELLOW 106	40300
ACID ORANGE 62	NONE	ACID BLUE 230	62073	DIRECT YELLOW 107	NONE
ACID ORANGE 63	22870	ACID BLUE 231	NONE	DIRECT YELLOW 117	NONE
ACID ORANGE 74	18745	ACID GREEN 3	42085	DIRECT YELLOW 118	NONE
ACID ORANGE 76	18870	ACID GREEN 16	44025	DIRECT YELLOW 127	NONE
ACID ORANGE 86	NONE	ACID GREEN 20	20495	DIRECT YELLOW 133	NONE
ACID ORANGE 116	NONE	ACID GREEN 25	61570	DIRECT ORANGE 15	40002
ACID ORANGE 119	NONE	ACID GREEN 35	13361	DIRECT ORANGE 15	40003
ACID RED 1	18050	ACID GREEN 58	NONE	DIRECT ORANGE 26	29150
ACID RED 4	14710	ACID GREEN 70	NONE	DIRECT ORANGE 29	29155
ACID RED 17	16180	ACID BROWN 14	20195	DIRECT ORANGE 61	40210
ACID YELLOW 18	16255	ACID BROWN 19	NONE	DIRECT ORANGE 72	NONE
ACID RED 37	17045	ACID BROWN 28	NONE	DIRECT ORANGE 73	25200
ACID RED 57	NONE	ACID BROWN 45	NONE	*DIRECT ORANGE 110	NONE
ACID RED 73	27290	ACID BROWN 98	NONE	*DIRECT RED 1	22310
ACID RED 88	15620	ACID BLACK 1	20470	DIRECT RED 2	23500
*ACID RED 99	23285	ACID BLACK 26	27070	DIRECT RED 4	29165
ACID RED 114	23635	ACID BLACK 26	27075	DIRECT RED 16	27680
ACID RED 134	24810	*DIRECT BROWN 2	22311	DIRECT RED 23	29160
ACID RED 137	17755	ACID BLACK 48	65005	DIRECT RED 24	29185
ACID RED 151	26900	ACID BLACK 52	15711	DIRECT RED 26	29190
ACID RED 167	NONE	ACID BLACK 58	NONE	DIRECT RED 31	29100
*ACID RED 179	19351	ACID BLACK 60	18165	DIRECT RED 39	23630
ACID RED 183	18800	ACID BLACK 107	NONE	DIRECT RED 62	29175
ACID RED 191	NONE	AZOIC DIAZOIC 0	37185	DIRECT RED 72	29200

*LAST LISTED IN 1972

TABLE C-1. DYES AND PIGMENTS MANUFACTURED IN 1973 (CONTINUED)
TOMS RIVER CHEMICAL CORPORATION (CONTINUED)

DYE OR PIGMENT NAME	COLOR INDEX	DYE OR PIGMENT NAME	COLOR INDEX	DYE OR PIGMENT NAME	COLOR INDEX
DIRECT RED 79	29065	DISPERSE YELLOW 42	10338	REACTIVE BLUE 7	74460
DIRECT RED 80	35780	DISPERSE YELLOW 50	NONE	REACTIVE BLACK 1	17916
DIRECT RED 81	28160	DISPERSE YELLOW 54	47020	FLUORESCENT BRIGHTENER 45	NONE
DIRECT RED 83	29225	DISPERSE ORANGE 3	11005	MORDANT DYE 0	13360
DIRECT RED 122	29210	DISPERSE ORANGE 21	NONE	*MORDANT DYE 1	19350
DIRECT RED 209	NONE	DISPERSE ORANGE 25	NONE	MORDANT YELLOW 5	14130
DIRECT VIOLET 9	27885	DISPERSE ORANGE 30	NONE	MORDANT YELLOW 30	18710
DIRECT VIOLET 66	29120	DISPERSE ORANGE 37	NONE	MORDANT ORANGE 1	14030
DIRECT BLUE 1	24410	DISPERSE ORANGE 38	NONE	MORDANT ORANGE 6	26520
*DIRECT BLUE 2	22590	DISPERSE ORANGE 78	NONE	MORDANT ORANGE 8	NONE
DIRECT BLUE 14	23850	DISPERSE RED 1	11110	MORDANT RED 7	18760
DIRECT BLUE 25	23790	DISPERSE RED 4	60755	MORDANT BROWN 1	20110
DIRECT BLUE 67	27925	DISPERSE RED 15	60710	MORDANT BROWN 33	13250
DIRECT BLUE 71	34140	DISPERSE RED 17	11210	*MORDANT BROWN 63	NONE
DIRECT BLUE 75	34220	DISPERSE RED 30	NONE	MORDANT BLACK 1	15710
DIRECT BLUE 76	24411	DISPERSE RED 55	NONE	MORDANT BLACK 3	14640
DIRECT BLUE 78	34200	DISPERSE RED 60	60756	MORDANT BLACK 11	14645
DIRECT BLUE 80	NONE	DISPERSE RED 65	NONE	MORDANT BLACK 17	15705
DIRECT BLUE 86	74180	DISPERSE RED 73	NONE	MORDANT BLACK 26	NONE
DIRECT BLUE 91	NONE	DISPERSE RED 78	NONE	VAT DYE 0	70315
DIRECT BLUE 98	23155	DISPERSE VIOLET 1	61100	VAT YELLOW 2	67300
DIRECT BLUE 120	34085	DISPERSE VIOLET 27	NONE	VAT YELLOW 14	NONE
DIRECT BLUE 120	34090	DISPERSE VIOLET 28	61102	VAT YELLOW 33	NONE
DIRECT BLUE 126	34010	DISPERSE VIOLET 57	NONE	VAT ORANGE 1	59105
DIRECT BLUE 151	24175	DISPERSE BLUE 1	64500	VAT ORANGE 2	59705
DIRECT BLUE 160	NONE	DISPERSE BLUE 3	61505	VAT ORANGE 7	71105
DIRECT BLUE 189	NONE	DISPERSE BLUE 7	62500	VAT ORANGE 9	59700
DIRECT BLUE 218	24401	DISPERSE BLUE 55	NONE	VAT ORANGE 15	69025
*DIRECT GREEN 1	30280	DISPERSE BLUE 56	63285	VAT RED 13	70320
*DIRECT GREEN 6	30295	DISPERSE BLUE 64	NONE	VAT RED 15	71100
*DIRECT GREEN 8	30315	DISPERSE BLUE 73	NONE	VAT VIOLET 1	60010
DIRECT GREEN 25	34045	DISPERSE BLUE 79	NONE	VAT VIOLET 9	60005
DIRECT GREEN 27	NONE	DISPERSE BLUE 85	NONE	VAT VIOLET 13	68700
DIRECT GREEN 28	14155	DISPERSE BLUE 125	NONE	VAT BLUE 6	69825
DIRECT GREEN 51	34260	DISPERSE BROWN 1	11152	VAT BLUE 11	69815
DIRECT GREEN 69	NONE	DISPERSE BLACK 1	11365	VAT BLUE 14	69810
*DIRECT BROWN 1	NONE	DISPERSE BLACK 2	11255	VAT BLUE 18	59815
*DIRECT BROWN 95	30145	DISPERSE BLACK 2	37185	VAT BLUE 20	59800
DIRECT BROWN 111	NONE	REACTIVE YELLOW 2	NONE	*VAT GREEN 1	59825
DIRECT BLACK 19	35255	REACTIVE YELLOW 3	NONE	VAT GREEN 3	69500
DIRECT BLACK 22	35435	*REACTIVE YELLOW 6	NONE	VAT GREEN 9	59850
*DIRECT BLACK 44	NONE	REACTIVE ORANGE 5	NONE	VAT BROWN 1	70800
DIRECT BLACK 51	27720	REACTIVE ORANGE 11	NONE	VAT BROWN 3	69015
DIRECT BLACK 56	34170	REACTIVE RED 4	18105	VAT BROWN 11	NONE
DISPERSE YELLOW 3	11855	REACTIVE RED 55	NONE	VAT BROWN 57	NONE
DISPERSE YELLOW 8	12690	REACTIVE RED 86	NONE	*VAT BLACK 9	65230
DISPERSE YELLOW 23	26070	REACTIVE BLUE 2	61211	VAT BLACK 22	NONE
DISPERSE YELLOW 33	NONE	REACTIVE BLUE 5	61205	VAT BLACK 25	69525

*LAST LISTED IN 1972

TABLE C-1. DYES AND PIGMENTS MANUFACTURED IN 1973 (CONTINUED)
TOMS RIVER CHEMICAL CORPORATION (CONTINUED)

DYE OR PIGMENT NAME	COLOR INDEX
VAT BLACK 27	69005
*PIGMENT VAT ORANGE 3	59300
PIGMENT RED 177	NONE
*ALPHA PIGMENT BLUE 15	74160
*PIGMENT BLUE 64	69825
PIGMENT GREEN 7	74260

*LAST LISTED IN 1972

TABLE C-1. DYES AND PIGMENTS MANUFACTURED IN 1973 (CONTINUED)
PAUL UHLICH + COMPANY, INC.

DYE OR PIGMENT NAME	COLOR INDEX
PIGMENT ORANGE 2	12060
PIGMENT RED 17	12390
*PIGMENT RED 23	12355
PIGMENT RED 3	12120
PIGMENT RED 4	12085
BARIUM PIGMENT RED 49	15630
PMA PIGMENT RED 81	45160
PTA PIGMENT RED 81	45160
FUGITIVE PIGMENT VIOLET 1	45170
PMA PIGMENT VIOLET 1	45170
FUGITIVE PIGMENT VIOLET 3	42535
PMA PIGMENT VIOLET 3	42535
PMA PIGMENT BLUE 1	42595
PMA PIGMENT BLUE 9	42025
PMA PIGMENT GREEN 1	42040
PMA PIGMENT GREEN 2	42040
PMA PIGMENT GREEN 2	49005
LAKE PIGMENT RED 83	58000
LAKE PIGMENT VIOLET 5	58055
NATURAL RED 6	75330

*LAST LISTED IN 1972

TABLE C-1. DYES AND PIGMENTS MANUFACTURED IN 1973 (CONTINUED)
UNIDENTIFIED COMPANY

DYE OR PIGMENT NAME	COLOR INDEX
AZOIC YELLOW 2	37610
AZOIC YELLOW 2	37120
AZOIC ORANGE 3	37558
AZOIC ORANGE 3	37010
AZOIC RED 1	37558
AZOIC RED 1	37090
AZOIC RED 2	37530
AZOIC RED 2	37120
AZOIC RED 6	37520
AZOIC RED 6	37090
AZOIC BLUE 3	NONE
AZOIC BROWN 3	37600
AZOIC BROWN 3	37010
AZOIC BROWN 9	NONE
PIGMENT YELLOW 14	21095
PIGMENT RED 122	73915
PIGMENT BLUE 27	77510

TABLE C-1. DYES AND PIGMENTS MANUFACTURED IN 1973 (CONTINUED)
UNITED MERCHANTS AND MFR., ROMA CHEMICAL-COLOR DIV.

DYE OR PIGMENT NAME	COLOR INDEX
PIGMENT YELLOW 12	21090
PIGMENT YELLOW 13	21100
PIGMENT YELLOW 14	21095
PIGMENT YELLOW 17	21105
PIGMENT ORANGE 16	21160
PIGMENT ORANGE 34	21115
PIGMENT RED 5	12490
PIGMENT RED 22	12315
PIGMENT RED 23	12355
BETA PIGMENT BLUE 15	74160
PIGMENT BROWN 5	15800

TABLE C-1. DYES AND PIGMENTS MANUFACTURED IN 1973 (CONTINUED)
WARNER-JENKINSON COMPANY

DYE OR PIGMENT NAME	COLOR INDEX
ACID YELLOW 23	19140
FD+C BLUE 1	42090
FD+C BLUE 2	73015
FD+C GREEN 3	42053
FD+C RED 2	16185
FD+C RED 3	45430
FD+C RED 40	NONE
FD+C VIOLET 1	42640
FD+C YELLOW 5	19140
FD+C YELLOW 6	15985

TABLE C-1. DYES AND PIGMENTS MANUFACTURED IN 1973 (CONTINUED)
J. S. YOUNG COMPANY, YOUNG ANALINE WORKS, INC., SUBSIDIARY

DYE OR PIGMENT NAME	COLOR INDEX
ACID YELLOW 19	NONE
ACID YELLOW 23	19140
ACID YELLOW 65	14170
ACID ORANGE 7	15510
ACID ORANGE 10	16230
ACID ORANGE 24	20170
ACID ORANGE 45	22195
ACID ORANGE 115	NONE
ACID RED 1	18050
ACID RED 4	14710
ACID RED 14	14720
ACID RED 33	17200
ACID RED 73	27290
ACID RED 85	22245
ACID RED 88	15620
ACID RED 99	23285
ACID RED 106	18110
ACID RED 151	26900
ACID VIOLET 3	16580
ACID VIOLET 6	16600
ACID BLUE 29	20460
ACID BLUE 92	13390
ACID BLUE 113	26360
ACID BROWN 14	20195
ACID BROWN 59	NONE
ACID BROWN 98	NONE
ACID BLACK 1	20470
ACID BLACK 29	NONE
ACID BLACK 41	20480
DIRECT BROWN 2	22311
DIRECT DYE 0	22165
DIRECT YELLOW 12	24895
DIRECT ORANGE 8	22130
DIRECT ORANGE 8	22140
DIRECT RED 1	22310
DIRECT RED 10	22145
DIRECT RED 13	22155
DIRECT RED 28	22120
DIRECT RED 37	22240
DIRECT RED 39	23630
DIRECT RED 81	28160
DIRECT BLUE 1	24410
DIRECT BLUE 2	22590
DIRECT BLUE 5	NONE
DIRECT BLUE 15	24400
DIRECT BLUE 24	NONE
DIRECT BLUE 25	23790
DIRECT BLUE 76	24411
DIRECT GREEN 1	30280
DIRECT GREEN 6	30295
DIRECT BROWN 1	NONE
DIRECT BROWN 6	30140
DIRECT BROWN 31	35660
DIRECT BROWN 44	35005
DIRECT BROWN 59	22345
DIRECT BROWN 95	30145
DIRECT BROWN 154	30120
DIRECT BLACK 4	30245
DIRECT BLACK 8	NONE
DIRECT BLACK 22	35435
DIRECT BLACK 38	30235
DIRECT BLACK 80	31600
DISPERSE YELLOW 3	11855
DISPERSE RED 5	11215
MORDANT BROWN 1	20110

APPENDIX D

LOCATION OF PLANTS MANUFACTURING DYES, PIGMENTS OR INTERMEDIATES, LISTED ALPHABETICALLY BY NAME OF THE MANUFACTURER

TABLE D-1
ALLIANCE CHEMICAL COMPANY, INC.

Plant: 33 Avenue P
Newark, New Jersey 07105

Office: Linden Avenue
Ridgefield, New Jersey 07657

Azoic dyes
Azoic components

TABLE D-2. ALLIED CHEMICAL CORPORATION

Morristown, New Jersey 07960

Specialty Chemicals Division
P.O. Box 1069
Buffalo, New York 14240

Aminoazo xylene toluene hydrochloride
4-Amino-5-hydroxy-2,7-naphthalenedisulfonic acid, monosodium salt
8-Amino-1,3,6-naphthalenetrisulfonic acid, disodium salt
2-Amino-5-nitrobenzenesulfonic acid
4-Amino-4'-nitro-2,2'-stilbenedisulfonic acid, disodium salt
m-[(p-Aminophenyl) azo] benzenesulfonic acid
p-[(p-Aminophenyl)azo] benzenesulfonic acid, sodium salt
tert-Amyl β-naphthol
Anilinomethanesulfonic acid, sodium salt
Benzidine sulfate
N-Benzyl-N-ethyl-m-toluidine
4,4'-Bis (dimethylaminophenyl) methane-2-sulfonic acid, sodium salt
4-Chlorometanilic acid
4-Chloro-3-nitrobenzenesulfonic acid
4-Chloro-3-nitrobenzenesulfonic acid, potassium salt
Copper phthalocyaninedisulfonic acid
p-([2-Cyanoethyl] methylamino) benzaldehyde
3,6-Diacetylamino acridine
3,3'-Dichlorobenzidine dihydrochloride
p-(Diethylamino) benzaldehyde
N,N-Diethylaniline
4,5-Dihydroxy-2,7-naphthalenedisulfonic acid, sodium salt
p-Dimethylaminobenzaldehyde
N,N-Dimethylaniline
Di-trichloromethyl copper phthalocyanine

Dyes

Acid dyes
Basic dyes
Direct dyes
Disperse dyes
Food, drug and cosmetic colors
Mordant dyes
Solvent dyes
Sulfur dyes
Vat dyes
N-Ethylaniline
Ethylbenzylaniline sulfonic acid
N-Ethyl-N-phenylbenzylamine
α-(N-Ethyl-m-toluidino)-m-toluenesulfonic acid
Isatin
Isobutyl β-naphthol

TABLE D-2. (Continued)

Leuco-1,4-diaminoanthraquinone
N-Methylaniline
2-Methylindole
7- (and 8)-Nitronaphth (1,2-d) (1,2,3) oxadiazole-5-sulfonic acid
5-Nitro-o-toluenesulfonic acid
3,4,9,10-Perylenetetracarboxylic-3,4:9,10-dianhydride
3,4,9,10-Perylenetetracarboxylic 3,4:9,10-diimide
p-(Phenylazo) aniline hydrochloride
Phthalide
Quinaldine
Quinizarin
2,2'-5,5'-Tetramethyl-4,4'-diamino triphenylmethane
6,6'-Thiodimetanilic acid
1,3,3-Trimethyl-2-methyleneindoline
1,3,3-Trimethyl-2-methylene indoline omega aldehyde
Violanthrone

Harmon Colors
P.O. Box 14
Hawthorne, New Jersey 07507

Manufactures a variety of dyes

550 Belmont Avenue
Haledon, New Jersey 07508

Dyes

[Phthalocyaninato (2-)] copper

TABLE D-3. AMERICAN COLOR AND CHEMICAL CORPORATION*

100 East 42nd Street
New York, New York 10017
Colors Department**

Mt. Vernon Street
Lock Haven, Pennsylvania 17745

1-Aminoanthraquinone and salt
3-Amino-4-ethoxyacetanilide
N-(4-Amino-3-methoxy-1-anthraquinonyl)-p-toluenesulfonamide
2-Amino-(p-nitrophenylazo) naphthalene
5-Aminosalicyclic acid
o-Anisidine
o-Anisidinomethanesulfonic acid
7H-Benz (de) anthracen-7-one
Benzotriazole
3,3',4,4'-Biphenyltetramine
2-Bromo-6-chloro-4-nitroaniline
2-Bromo-4,6-dinitroaniline
o-Chloroaniline
1-Chloro-2-methylanthraquinone
4-Chloro-2-nitroaniline
1-Chloro-2-nitrobenzene
o-(4-Chloro-3-nitrobenzoyl) benzoic acid
4-Chloro-2-nitrotoluene
4-Chlororesorcinol
1,5 (and 1,8)-Diaminoanthraquinone
2,6-Diaminoanthraquinone
3,4'-Diaminobenzanilide
9,10-Dihydro-9,10-dioxo-2,6-anthracenedisulfonic acid
9,10-Dihydro-9,10-dioxo-2,6-anthracenedisulfonic acid, sodium salt
9,10-Dihydro-9,10-dioxo-1-anthracenesulfonic acid
9,10-Dihydro-9,10-dioxo-1-anthracenesulfonic acid, sodium salt
9,10-Dihydro-5-nitro-9,10-dioxo-1-anthracenesulfonic acid
9,10-Dihydro-1-nitro-9,10-dioxo-2-anthroic acid
1,5-Dihydroxy-4,8-dinitroanthraquinone
2,4-Dinitroaniline
1,5 (and 1,8)-Dinitroanthraquinone

Dyes

Acid dyes
Azoic coupling components
Azoic diazo components
Direct dyes
Disperse dyes
Mordant dyes
Solvent dyes
Vat dyes

---

* Owned by North American Phillips Corporation
** Formerly part of Intermediates Division, Tenneco, Inc.

TABLE D-3. (Continued)

4-Ethoxy-3-nitroacetanilide
1-Hydroxyanthraquinone
4-Hydroxymetanilic acid
Leuco quinizarin
1-(Methylamino) anthraquinone
p-(3-Methyl-5-oxo-2-pyrazolin-1-yl) benzenesulfonic acid
o-Nitroaniline
p-Nitroaniline
5-Oxo-1-(p-sulfophenyl)-2-pyrazoline-3-carboxylic acid
Quinizarin
2-Quinizarinsulfonic acid
Resorcinol, monoacetate

Beaufort, South Carolina 29902

7-Amino-4-hydroxy-2-naphthalenesulfonic acid, sodium salt
3-Hydroxy-2,7-naphthalenedisulfonic acid
7-Hydroxy-1,3-naphthalenedisulfonic acid
7,7'-Ureylenebis (4-hydroxy-2-naphthalenesulfonic acid)

Paterson, New Jersey 07524

Dyes

Disperse dyes

Reading, Pennsylvania 19604
12th and Bern Streets

Dyes

Acid dyes
Direct dyes
Disperse dyes

TABLE D-4. AMERICAN CYANAMID COMPANY

Berdan Avenue
Wayne, New Jersey 07470

Organic Chemicals Division
Bound Brook, New Jersey 08805

N-Acetylsulfanilyl chloride
1-Aminoanthraquinone and salt
2-Aminoanthraquinone and salt
6-Amino-3'4'-azodi (benzenesulfonic acid)
1-Amino-4-benzamidoanthraquinone
1-Amino-5-chloroanthraquinone
2-Amino-5-chloro-4-ethylbenzenesulfonic acid
3-Amino-6-chloropyridazine
2-Amino-5-chloro-p-toluenesulfonic acid
4-Amino-3-hydroxy-1-naphthalenesulfonic acid
2-Amino-4-methylpyrimidine
2-Amino-5-methyl-1,3,4-thiadiazole
2-Amino-1,5-naphthalenedisulfonic acid
2-Amino-1-naphthalenesulfonic acid
4-Amino-1-naphthalenesulfonic acid
p-[(p-Aminophenyl) azo] benzenesulfonic acid
2-Aminopyrimidine
4-Amino-m-toluenesulfonic acid
Aniline
Aniline hydrochloride
Anilinomethanesulfonic acid
Anilinomethanesulfonic acid, sodium salt
7H-Benz (de) anthracen-7-one
Benzothiazole
2-Benzothiazolethiol, sodium salt
o-Benzoylbenzoic acid
(4,4'-Bi-7H-benz [de] anthracen)-7,7'-dione
3-Bromo-7H-benz (de) anthracen-7-one
1-Chloroanthraquinone
2-Chloroanthraquinone
Chloro-7H-benz (de) anthracen-7-one
p-Chlorobenzenesulfonamide
o-(p-Chlorobenzoyl) benzoic acid
1-Chloro-2-methylanthraquinone
1-Chloro-5-nitroanthraquinone
[(4-Chloro-o-tolyl) thio] acetic acid
p-Cresol
4,4'-Diamino-2,2'-biphenyldisulfonic acid
4,4'-Diamino-3,3'-dimethyltriphenylmethane
4,4'-Diamino-2,2'-stilbenedisulfonic acid
4,5'-Dibenzamido-1,1'-iminodianthraquinone
1,5-Dibenzoylnaphthalene
Dichlorobenzanthrone

TABLE D-4. (Continued)

3-(Diethylamino) propiophenone
N,N-Diethylaniline
9,10-Dihydro-9,10-dioxo-1-anthracenesulfonic acid, sodium salt
16,17-Dihydroxyviolanthrone
N,N-Dimethylaniline
2,2'-Dimethyl-1,1'-bianthraquinone
N,N-Dimethyl-p-nitrosoaniline
4,4'-Dinitrostilbene-2,2'-disulfonic acid
Diphenylamine
1,3-Diphenyl-2-thiourea
2,5-Dithiobiurea

Dyes

Acid dyes
Azoic coupling components
Basic dyes
Direct dyes
Disperse dyes
Mordant dyes
Oxidation bases
Solvent dyes
Sulfur dyes
Vat dyes

N-Ethylaniline
p-Ethylphenol
N-(Hydroxymethyl) phthalamide
3-Hydroxy-2,7-naphthalenedisulfonic acid, disodium salt
7-Hydroxy-1,3-naphthalenedisulfonic acid, disodium salt
6-Hydroxy-2-naphthalenesulfonic acid, sodium salt
N-(2-Hydroxy-1-naphthyl) acetamide
Hydroxynitroviolanthrone
2-Hydroxy-4-sulfo-1-naphthalenediazonium hydroxide, inner salt
1,1'-Iminobis (4-aminoanthraquinone)
1,1'-Iminobis (4-benzamidoanthraquinone)
1,1'-Iminobis-4-nitroanthraquinone
N-Isopropylaniline
Isoviolanthrone
Leuco-1,4-diaminoanthraquinone
Leuco quinizarin
1-(Methylamino) anthraquinone
N-Methylaniline
2-Methylanthraquinone
p-(3-Methyl-5-oxo-2-pyrazolin-1-yl) benzenesulfonic acid
3-Methyl-1-phenyl-2-pyrazolin-5-one
2-Naphthalenesulfonic acid, sodium salt
2-Naphthol
(2-Naphthylthio) acetic acid
1-Nitroanthraquinone
Nitrobenzene
m-Nitrobenzenesulfonic acid, potassium salt
p-Nitrosodiphenylamine
5-Nitro-o-toluenesulfonic acid
1-[(7-Oxo-7H-benz [de] anthracen-3-yl) amino] anthraquinone

TABLE D-4. (Continued)

3-Oxy-4-methyl-6-chlorothionaphthalene
p-(Phenylazo) aniline
p-(Phenylazo) aniline hydrochloride
N,N'-p-Phenylenebis (acetamide)
3-Piperidinopropiophenone hydrochloride
Quinizarin
Sulfanilic acid
Tetrahydroxysuccinic acid
1,1'-Thiobis (2-naphthol)
4,4'-Thiodianiline
Thiosemicarbazide
Toluene-2,4'diamine
p-Toluenesulfonic acid
o-Toluidine hydrochloride
o-(p-Toluoyl) benzoic acid
4-(o-Tolyazo)-o-toluidine
Violanthrone
4-(2,5-Xylylazo)-o-toluidine
Benzothiazole
2-Benzothiazolethiol, sodium salt
o-Benzoylbenzoic acid
(4,4'-Bi-7H-benz [de] anthracen)-7,7'-dione
3-Bromo-7H-benz (de) anthracen-7-one
1-Chloroanthraquinone
2-Chloroanthraquinone
Chloro-7H-benz (de) anthracen-7-one
p-Chlorobenzenesulfonamide
o-(p-Chlorobenzoyl) benzoic acid
1-Chloro-2-methylanthraquinone
1-Chloro-5-nitroanthraquinone
[(4-Chloro-o-tolyl) thio] acetic acid
p-Cresol
4,4'-Diamino-2,2'-biphenyldisulfonic acid
4,4'-Diamino-3,3'-dimethyltriphenylmethane
4,4'-Diamino-2,2'-stilbenedisulfonic acid
4,5'-Dibenzamido-1,1'-iminodianthraquinone
1,5-Dibenzoylnaphthalene
Dichlorobenzanthrone
3-(Diethylamino) propiophenone
N,N-Diethylaniline
9,10-Dihydro-9,10-dioxo-1-anthracenesulfonic acid, sodium salt
16,17-Dihydroxyviolanthrone
N,N-Dimethylaniline
2,2'-Dimethyl-1,1'-bianthraquinone
N,N-Dimethyl-p-nitrosoaniline
4,4'-Dinitrostilbene-2,2'-disulfonic acid
Diphenylamine

TABLE D-4. (Continued)

1,3-Diphenyl-2-thiourea
2,5-Dithiobiurea

Dyes

Acid dyes
Azoic coupling components
Basic dyes
Direct dyes
Disperse dyes
Mordant dyes
Oxidation bases
Solvent dyes
Sulfur dyes
Vat dyes

N-Ethylaniline
p-Ethylphenol
N-(Hydroxymethyl) phthalamide
3-Hydroxy-2,7-naphthalenedisulfonic acid, disodium salt
7-Hydroxy-1,3-naphthalenedisulfonic acid, disodium salt
6-Hydroxy-2-naphthalenesulfonic acid, sodium salt
N-(2-Hydroxy-1-naphthyl) acetamide
Hydroxynitroviolanthrone
2-Hydroxy-4-sulfo-1-naphthalenediazonium hydroxide, inner salt
1,1'-Iminobis (4-aminoanthraquinone)
1,1'-Iminobis (4-benzamidoanthraquinone)
1,1'-Iminobis-4-nitroanthraquinone
N-Isopropylaniline
Isoviolanthrone
Leuco-1,4-diaminoanthraquinone
Leuco quinizarin
1-(Methylamino) anthraquinone
N-Methylaniline
2-Methylanthraquinone
N,N'-Methylenebisacrylamide
p-(3-Methyl-5-oxo-2-pyrazolin-1-yl) benzenesulfonic acid
3-Methyl-1-phenyl-2-pyrazolin-5-one
2-Naphthalenesulfonic acid, sodium salt
2-Naphthol
(2-Naphthylthio) acetic acid
1-Nitroanthraquinone
Nitrobenzene
m-Nitrobenzenesolfonic acid, potassium salt
p-Nitrosodiphenylyamine
5-Nitro-o-toluenesulfonic acid
1-[(7-Oxo-7H-benz [de] anthracen-3-yl) amino] anthraquinone

TABLE D-4. (Continued)

3-Oxy-4-methyl-6-chlorothionaphthalene
p-(Phenylazo) aniline
p-(Phenylazo) aniline hydrochloride
N,N'-p-Phenylenebis (acetamide)
3-Piperidinopropiophenone hydrochloride
Quinizarin
Sulfanilic acid
Tetrahydroxysuccinic acid
1,1'-Thiobis (2-naphthol)
4,4'-Thiodianiline
Thiosemicarbazide
Toluene-2,4-diamine
p-Toluenesulfonic acid
o-Toluidine hydrochloride
o-(p-Toluoyl) benzoic acid
4-(o-Tolyazo)-o-toluidine
Violanthrone
4-(2,5-Xylylazo)-o-toluidine

Damascus, Virginia 24236

Dyes

Mordant dyes
Solvent dyes
Sulfur dyes

3-Methoxypropionitrile
p-Nitrosophenol

Marietta, Ohio 45750
P.O. Box 388

o-Anisic acid
3,7-Diaminodibenzothiophenedisulfonic acid, 5,5-dioxide, disodium salt
m-(Diethylamino) phenol
2,2'-Dihydroxy-4-methoxybenzophenone
m-Dimethoxybenzene
2,4-Dimethoxybenzoic acid
m-(Dimethylamino) phenol

Dyes

Acid dyes
Basic dyes
Direct dyes
Fluorescent brightening agents
Solvent dyes

o-(2-Hydroxy-p-anisoyl) benzoic acid
2-Hydroxy-4-methoxybenzophenone
2-Hydroxy-4-methoxy-2'-carboxybenzophenone

TABLE D-4. (Continued)

2-Hydroxy-4-methoxy-2'-methylbenzophenone
2-Hydroxy-4-methoxy-5-sulfobenzophenone trihydrate
2-Hydroxy-4-octyloxobenzophenone
Metanilic acid
3-Methylbenzo (f) quinoline
2-Methylbenzo (h) quinoline
4,4'-Methylenebis (N,N-diethylaniline)
4,4'-Methylenebis (N,N-dimethylaniline)
5-Nitro-o-anisidine
2-Nitrodiphenylamine
Quinaldine

Willow Island, West Virginia 26196*

Aniline

Dyes

Fluorescent brightening agents
o-Ethoxybenzoic acid
Nitrobenzene
Optical brighteners
6-Hydroxy-2-naphthalenesulfonic acid, sodium salt
3-Hydroxy-2-naphthoic acid
R salt
2-Naphthol

Pigments Division
Bound Brook, New Jersey 08805

Carbazole violet

Dyes

[Phthalocyaninato (2-)] copper
Toners and lakes

Willow Island, West Virginia 26190

Dyes

Toners and lakes

*A new 3-hydroxy-2-naphthoic acid plant is under construction.

TABLE D-5. AMERICAN HOECHST CORPORATION

(Owned by Farbwerke Hoechst of West Germany)
Route 202-206 North
Somerville, New Jersey 08876

See also: Sou-Tex Chemical Company, Inc., owned with Casella Farbwerke Mainkur of West Germany

Dyes and Pigments Division
P.O. Box 268
Coventry, Rhode Island 02816

Acetoacetanilide
Acetoaceto-o-anisidide
Acetoacet-o-chloranilide
Acetoacet-o-toluidide
Acetoacet-m-xylidide
β-(4-Amino-2,5-dimethoxyphenylsulfonyl) ethyl sulfate
3-Amino-4-methoxyphenyl -hydroxyethyl sulfone
3-Aminophenyl- -hydroxyethyl sulfone
4-Aminophenyl- -hydroxyethyl sulfone
4,4'-Bisacetoacet-o-toluidide
Carbazole violet
1,5-Dibenzoylnaphthalene
2,5-Dichloro-4-(3-methyl-5-oxo-2-pyrazolin-1-yl) benzenesulfonic acid
4-(N,N-Diethylamino) benzenediazonium zinc chloride
p-Dimethylaminobenzenediazonium chloride-zinc chloride
Disodium 2,7-dihydroxynaphthalene-3,6-disulfonate

Dyes

Acid dyes
Azoic dyes and components
Disperse dyes
Fiber-reactive dyes
[Phthalocyaninato (2-)] copper
Toners and lakes
Vat dyes

N,N'-Ethylene-bis-acetoacetamide
1-[p-(β-Hydroxyethylsulfonyl) phenyl]-3-methyl-5-pyrazolone
1,4,5,8-Naphthalenetetracarboxylic acid
1-Phenyl-3-carbethoxy-5-pyrazolone
Sodium N,N-dimethylsulfanilate
1-(p-Sulfophenyl)-3-carboxy-5-pyrazolone
p-Tolyl-3-methyl-5-pyrazolone
Products N.E.C.
1-Butyl-3-p-tolylsulfonylurea

TABLE D-5. (Continued)

4-(N-Ethyl-N-benzylamino) benzenediazonium semizinc chloride
4-(N-Ethyl-N-[2-hydroxyethyl]amino) benzenediazonium semizinc chloride
4-(N-Methyl-N-[2-hydroxyethyl]amino) benzenediazonium semizinc chloride
4-(N-Morpholyl)-2,5-diethoxybenzenediazonium semizinc chloride
4-(N-Morpholyl)-2,5-dimethoxybenzenediazonium zinc chloride

TABLE D-6. APOLLO COLORS, INC.

899 Skokie
Northbrook, Illinois 60062

Pigments

TABLE D-7. ATLANTIC CHEMICAL INDUSTRIES, INC.

10 Kingland Road
P.O. Box 216
Nutley, New Jersey 07110

Atlantic Chemical Corporation, subsidiary
Nutley, New Jersey 07110

8-Amino-2-naphthol
p-[(p-Aminophenyl) azo] benzenesulfonic acid
2-(p-Aminophenyl)-6-methyl-7-benzothiazolesulfonic acid and salt
16-Aminoviolanthrone
Anilinomethanesulfonic acid
Anilinomethanesulfonic acid, sodium salt
o-Anisidinomethanesulfonic acid
7H-Benz (de) anthracen-7-one
m-Chloroaniline hydrochloride
5'-Chloro-3-hydroxy-2-naphtho-o-toluidide
N-[(5-Chloro-2-methoxyphenyl) azo] sarcosine
5-Chloro-o-toluidine hydrochloride
N-[(5-Chloro-o-tolyl) azo] sarcosine
1,4-Diaminoanthraquinone
4,4'-Diamino-2,2'-biphenyldisulfonic acid
Dibenzo [b,def] chrysene-7,14-dione
Dioxy R salt
1,4-Di-p-toluidinoanthraquinone

Dyes

Acid dyes
Azoic coupling components
Azoic diazo components
Azoic dyes and components
Basic dyes
Direct dyes
Disperse dyes
Mordant dyes
Solvent dyes
Vat dyes

3-Hydroxy-2,7-naphthalenedisulfonic acid
4-Hydroxy-1-naphthalenesulfonic acid
3-Hydroxy-2-naphthanilide
3-Hydroxy-2-naphth-o-anisidide
3-Hydroxy-2-naphtho-o-phenetidide
3-Hydroxy-2-naphtho-o-toluidide
Leuco-1,4-diaminoanthraquinone
4-Methoxymetanilic acid

TABLE D-7. (Continued)

16-Nitroviolanthrone
Primulinesulfonic acid
2,2'-Tolidinedisulfonic acid
p-Toluenesulfonic acid, ethyl ester
7,7'-Ureylenebis (4-hydroxy-2-naphthalenesulfonic acid)
Violanthrone
2,4-Xylidine acetate
General and Compounded Products
Pyrotechnic dyes

TABLE D-8. BASF WYANDOTTE CORPORATION

(Merger of BASF Corporation and Wyandotte Chemicals Corporation)
100 Cherry Hill Road
Parsipanny, New Jersey 07054

Colors and Chemicals Group
100 Cherry Hill Road
Parsipanny, New Jersey 07054

4330 Chesapeake Drive
Charlotte, North Carolina 28208

Dyes

[Phthalocyaninato (2-)] copper
Pigments

Kearny, New Jersey

Dyes

About 15 various colors

TABLE D-9. BENZENOID ORGANICS, INC.

P.O. Box 156, Route 140
Bellingham, Massachusetts 02019

Dyes

Acid dyes
Direct dyes
Mordant dyes
Vat dyes

General and Compounded Products

Cyclic intermediates

TABLE D-10. BERNCOLORS-POUGHKEEPSIE, INC.

75 North Water Street
P.O. Box 29
Poughkeepsie, New York 12602

Dyes

Acid dyes
Basic dyes
Direct dyes
Mordant dyes

TABLE D-11. BORDEN, INCORPORATED

50 West Broad Street
Columbus, Ohio 43215

Levey Division*
630 Glendale-Milford Road
Cincinnati, Ohio 45215

Dyes

[Phthalocyaninato (2-)] copper

*Levey Division was recently purchased by Borden from Cities Service Company, Inc., and combined with Graphic Arts Products. (Personal communication from Borden spokesman, 3/15/75.)

TABLE D-12. CHEMETRON CORPORATION

111 East Wacker Drive
Chicago, Illinois 60601

Pigments Division
491 Columbia Avenue
Holland, Michigan 49423

471 Howard Avenue
Holland, Michigan 49423

6-Amino-4-chloro-m-toluenesulfonic acid
2-Amino-5-chloro-p-toluenesulfonic acid
6-Amino-m-toluenesulfonic acid
Carbazole violet

Dyes

Basic dyes
[Phthalocyaninato (2-)] copper
Toners and lakes

General and Compounded Products

Dispersions for plastics (chip, paste, crumb, and powder)
Flushed pigments
Organic pigment toners

5th Avenue and 24th Street
P.O. Box 2166
Huntington, West Virginia 25722

2-Amino-5-chloro-p-toluenesulfonic acid
2-Amino-1-naphthalenesulfonic acid
Carbazole violet
2-Chloro-4-nitroaniline

Dyes

Acid dyes
Basic dyes
[Phthalocyaninato (2-)] copper
Toners and lakes

General and Compounded Products

Flushed pigments
Organic pigment toners

TABLE D-13. CHILDS PULP COLORS, INC.

5 Albany Street
P.O. Box 3217
Springfield, Massachusetts 01101

Dyes

Acid dyes
Toners and lakes

TABLE D-14. CIBA-GEIGY CORPORATION

(Owned by CIBA-Geigy Ltd., Basle, Switzerland)
Saw Mill River Road
Ardsley, New York 10502

See also: Toms River Chemical Corporation, owned by Ciba-Geigy Corporation, 80%, and Sandoz Ltd., 20%

Dyestuffs and Chemicals Division
Grœnsboro, North Carolina 27400

Dyes

Acid dyes
Basic dyes
Direct dyes
Disperse dyes
Fluorescent brightening agents
Vat dyes
General and Compounded Products
Pigments, printing, and binders

Industrial Chemicals Division
McIntosh, Alabama 36553 (bulk chemicals)

4,4'-Diamino-2,2'-stilbenedisulfonic acid
4,4'-Dinitrostilbene-2,2'-disulfonic acid
Di-n-octadecyl (3,5-di-tert-butyl-4-hydroxybenzyl) phosphonate

Dyes

Fluorescent brightening agents
Solvent dyes
Toners and lakes
Pentaerythritol tetrakis (3,5-di-tert-butyl-4-hydroxyhydrocinnamate)
Sarcosine
Surface-active agents
N-(Coconut oil acyl) sarcosine
Fatty acid-diethanolamine condensates
Capric acid-diethanolamine condensate
Coconut oil acid-diethanolamine condensate
Oleic acid-diethanolamine condensate
Stearic acid-diethanolamine condensate
Imidazoline derivatives
2-(8-Heptadecenyl)-1-(2-hydroxyethyl)-2-imidazoline
2-Heptadecyl-1-(2-hydroxyethyl)-2-imidazoline
1-(2-Hydroxyethyl)-2-tridecyl-2-imidazoline hydrochloride
1-(2-Hydroxyethyl)-2-undecyl-2-imidazoline

TABLE D-14. (Continued)

N-Lauroyl sarcosine
N-Lauroyl sarcosine, sodium salt
Naphthalenesulfonic acids and salts
Butylnaphthalenesulfonic acid, sodium salt
N-Oleoylsarcosine and sodium salt
Polyethylene glycol dioleate
Polyethylene glycol monolaurate
Polyethylene glycol mono-oleate
Polyethylene glycol monostearate
Polyethylene glycol sesquiester of castor oil acids
N-Stearoylsarcosine, sodium salt
Sulfosuccinic acid, bis (2-ethylhexyl) ester, sodium salt
Triallyl cyanurate
General and compounded products
Absorbers, ultraviolet
(Tinuvin® P, 327, 320, 326, 328)
Antimicrobial agent for deodorant soaps and anti-bacterial products
(Irgasan® DP300)

TABLE D-15. CINCINNATI MILACRON INC.

4701 Marburg Avenue
Cincinnati, Ohio 45209

Cincinnati Milacron Chemicals Inc., subsidiary
West Street
Cincinnati, Ohio 45215

Dyes

Fluorescent brightening agents
β-methylumbelliferone

TABLE D-16. CROMPTON & KNOWLES CORPORATION

345 Park Avenue
New York, New York 10022

Chemicals Group
Route 208,
Fair Lawn, New Jersey 07410

Gibraltar, Pennsylvania 19524

Dyes

Acid dyes
Basic dyes
Direct dyes
Disperse dyes
Food, drug and cosmetic colors
Toners and lakes

Reading, Pennsylvania 19603

Dyes

Acid dyes
Basic dyes
Direct dyes
Disperse dyes

TABLE D-17. DAY-GLO COLOR CORPORATION*

(Formerly Switzer Brothers, Inc.)
4732 St. Clair Avenue
Cleveland, Ohio 44103

Dyes

Fluorescent brightening agents
General and compounded products
Fluorescent pigments

9314 East Fern Street
South El Monte, California 91733

Dyes

Fluorescent brightening agents
General and compounded products
Fluorescent pigments

* Not listed by Synthetic Organic Chemicals in either 1972 or 1973.

TABLE D-18. E.I. DU PONT DE NEMOURS & COMPANY, INC.

1007 Market Street
Wilmington, Delaware 19898

Organic Chemicals Department
Dyes and Chemicals Division
Wilmington, Delaware 19898

Deepwater, New Jersey 08023

2-Amino-p-benzenedisulfonic acid
4-Amino-1-naphthalenesulfonic acid, sodium salt
2-(p-Aminophenyl)-6-methylbenzothiazole
2-Amino-3,5-xylenesulfonic acid
8-Anilino-1-naphthalenesulfonic acid, sodium salt
o-Anisidine
p-Anisidine
Anthranilic acid
7H-Benz (de) anthracen-7-one
N-Benzyl-N-ethyl-m-toluidine
N,N-Bis (cyanoethyl) aniline
4,4'-Bis (diethylamino) benzophenone
4,4'-Bis (dimethylamino) benzophenone
p-Butylaniline
2-tert-Butylanthraquinone
m-Chloroaniline
o-Chloroaniline
p-Chloroaniline
2-Chloro-N,N-diethyl-4-nitroaniline
4-Chlorometanilic acid
2-Chloro-4-nitroaniline
4-Chloro-2-nitroaniline
1-Chloro-2-nitrobenzene
1-Chloro-4-nitrobenzene
4-Chloro-3-nitrobenzenesulfonamide
2-Chloro-5-nitrobenzenesulfonic acid
2-Chloro-4-nitrotoluene
2-Chloro-6-nitrotoluene
4-Chloro-2-nitrotoluene
6-Chloro-2-nitrotoluene
3-Chloro-o-toluidine
3-Chloro-p-toluidine
5-Chloro-o-toluidine
2-Chloro-p-xylene
Decahydronaphthalene
2,4-Diaminobenzenesulfonic acid
2,5-Dichloroaniline
3,4-Dichloroaniline

TABLE D-18. (Continued)

1,4-Dichloro-2-nitrobenzene
2-Diethylaminoethyl methacrylate
N,N-Diethylaniline
N,N-Diethylcyclohexylamine
N,N-Diethyl-m-toluidine
N,N-Dimethylaniline
2,4-Dinitrotoluene

Dyes

Acid dyes
Basic dyes
Direct dyes
Disperse dyes
Fluorescent brightening agents
Mordant dyes
Solvent dyes
Toners and lakes
Vat dyes
3-(Ethylamino)-p-toluenesulfonic acid
N-Ethylaniline
3-(N-Ethylanilino) propionitrile
2-Ethylanthraquinone
Ethyl chloride
N-Ethyl-1-naphthylamine
N-Ethyl-N-phenylbenzylamine
N-Ethyl-m-toluidine
N-Ethyl-o-toluidine
3-(N-Ethyl-m-toluidino) propionitrile
N-Methylaniline
3-(N-Methylanilino) propionitrile
4,4'-Methylenebis (N,N-dimethylaniline)
1-Naphthylamine
2-Nitro-p-anisidine
4-Nitro-o-anisidine
o-Nitroanisole
p-Nitroanisole
p-Nitrobenzoic acid
p-Nitrophenol
m-Nitrotoluene
o-Nitrotoluene
p-Nitrotoluene
Nitrotoluenes, mixed
5-Nitro-o-toluenesulfonic acid
5-Nitro-o-toluidine
4,4'-Oxydianiline
p-(Phenylazo) aniline hydrochloride

TABLE D-18. (Continued)

m-Phenylenediamine
o-Phenylenediamine
Piperidine
Primuline base
Quinizarin
1,2,3,4-Tetrahydronaphthalene
Toluene-2,4-diamine
m-Toluidine
o-Toluidine
p-Toluidine
Toluidines, mixed
4-(o-Tolyazo)-o-toluidine
1,3,3-Trimethyl-2-methyleneindoline
2,4-Xylidine
Xylidine, mixed isomers
G salt

Du Pont Puerto Rico, Inc., subsidiary
Manati, Puerto Rico 00701

General and compounded products
Proprietary dyes

Pigments Department
Nemours Building
Wilmington, Delaware 19898

Newark, New Jersey 07100

General and compounded products
Pigment colors

Newport, Delaware 19804

General and compounded products
Pigment colors
Pigments, flake (Afflair®)

TABLE D-19. DYE SPECIALTIES, INC.

26 Journal Square
Jersey City, New Jersey 07306

4,4'-Bis (dimethylamino) benzophenone
N,N-Diethylaniline
N,N-Dimethylaniline

Dyes

Basic dyes
Solvent dyes
Triphenyl methane dyes

TABLE D-20. EASTMAN KODAK COMPANY

343 State Street
Rochester, New York 14650

Eastman Chemical Products, Inc., subsidiary
P.O. Box 431
Kingsport, Tennessee 37662

Tennessee Eastman Company, division
P.O. Box 511
Kingsport, Tennessee 37662

Acetanilide
Acetic acid
Acetic anhydride
p-Benzoquinone
Diketene
2,5-Dimethoxyaniline
p-Dimethoxybenzene
Dimethyl-1,4-cyclohexanedicarboxylate
1,8-Diphenoxyanthraquinone

Dyes

Disperse dyes*
2-(N-Ethylanilino) ethanol
Hydroquinone
N-Isopropylaniline
p-Methoxyphenol
Methyl acetoacetate
p-Toluhydroquinone
m-Tolyldiethanolamine
General and compounded products
Cationic dyes

* A new multimillion-dollar plant is under construction which will increase capacity for disperse dyes by one-third; completion was scheduled for early 1974.

TABLE D-21. FABRICOLOR INCORPORATED

24-1/2 Van Houten Street
Paterson, New Jersey 07505

Dyes

Acid dyes
Basic dyes
Direct dyes
Disperse dyes

TABLE D-22. FOSTER-HEATON COMPANY*

16 East Fifth Street
Paterson, New Jersey 07524

Dyes

Solvent dyes

*Not listed by Synthetic Organic Chemicals in either 1972 or 1973 edition.

TABLE D-23. GAF CORPORATION

140 West 51st Street
New York, New York 10020

Chemical Division
P.O. Box 337
Calvert City, Kentucky 42029

Carbazole violet
Dimethylamine
Methylamine, mono

P.O. Box 12
Linden, New Jersey 07036

Alkylphenols, mixed
1-Aminoanthraquinone and salt
2-Aminoanthraquinone and salt
N-(4-Amino-1-anthraquinonyl) anthranilic acids
1-Amino-5-benzamidoanthraquinone
4'-Aminobenzanilide
2-(m-Aminobenzoyl)-o-acetanisidide
1-Amino-2-bromo-4-p-toluidinoanthraquinone
2-Amino-3-chloroanthraquinone
o-(3-Amino-4-chlorobenzyl) benzoic acid
1-Amino-2,4-dibromoanthraquinone
1-Amino-9,10-dihydro-9,10-dioxo-2-anthracene-sulfonic acid
1-Amino-9,10-dihydro-9,10-dioxo-4-p-toluenesulfonamido 2-anthracenesulfonic acid, sodium salt
1-Amino-4-hydroxyanthraquinone
2-Amino-3-hydroxyanthraquinone
5-Aminoisophthalic acid
N-(4-Amino-3-methoxy-1-anthraquinonyl)-p-toluenesulfonamide
4'-Amino-N-methylacetanilide
6-Aminonaphth [2,3-c] acridan-5,8,14-trione
5- (and 8)-Amino-2-naphthol
2-(4-Amino-1-naphthylazo)-4-(1,1,3,3-tetramethyl) phenol
2-Amino-5-nitrobenzenesulfonic acid
2-(p-Aminophenoxy) ethanol hydrochloride
p-Aminophenyl benzyl ether
N-(4-Amino-3-sulfoanthraquinonyl) anthranilic acid
2-Amino-4-(1,1,3,3-tetramethylbutyl) phenol
2-Amino-4-(1,1,3,3-tetramethylbutyl) phenol hydrochloride
4-Amino-m-toluenesulfonic acid
16-Aminoviolanthrone
Anthraflavic acid
Anthraquinone
N,N'-(1,5-Anthraquinonylene) dianthranilic acid

TABLE D-23. (Continued)

N,N'-(1,5-Anthraquinonylene) dioxamic acid
Anthrarufin
4',4'''-Azobis (4-biphenylcarboxylic acid)
1-Benzamido-4-chloroanthraquinone
1-Benzamido-5-chloroanthraquinone
7H-Benz (de) anthracen-7-one
Benzenesulfinic acid, sodium salt
Benzyl p-nitrophenyl ether
3,3'-Bianthra (1,9-cd) pyrazole-6,6'(2H,2'H)-dione
(4,4'-Bi-7H-benz [de] anthracen)-7,7'-dione
1,4-Bis-(1-anthraquinonylamino) anthraquinone
Bis (1-anthraquinonylamino) violanthrene
3-Bromo-7H-benz (de) anthracen-7-one
1-Bromo-4-(N-methylacetamido) anthraquinone
1-Bromo-4-methylaminoanthraquinone
5'-(o-Carboxybenzoyl)-2'-chloro-oxanilic acid
m-Chloroaniline
1-Chloroanthraquinone
2-Chloroanthraquinone
4-(p-Chlorobenzamido) anthraquinone-1,2-acridone
Chloro-7H-benz (de) anthracen-7-one
p-Chlorobenzenesulfonic acid
4-Chloro-3,5-dinitrobenzoic acid
1-Chloro-2-methylanthraquinone
1-Chloro-3-nitrobenzene
o-(4-Chloro-3-nitrobenzoyl) benzoic acid
Chromium formate
Chrysazin
1,4-Diaminoanthraquinone
1,5-Diaminoanthraquinone
2,6-Diaminoanthraquinone
1,4-Diamino-5-nitroanthraquinone
2,4-Dianilino-1-hydroxyanthraquinone
1,5-Dibenzamidoanthraquinone
4,5'-Dibenzamido-1,1'-iminodianthraquinone
3,9-Dibromo-7H-benz (de) anthracen-7-one
2,3-Dibromo-2-butene-1,4-diol
Dibromoviolanthrone
2,6-Di-tert-butyl-4-nonylphenol
1,5-Dichloroanthraquinone
1,8-Dichloroanthraquinone
2,5-Dichlorobenzoyl chloride
2,5-Dichloro-3-nitrobenzoate, ammonium salt
2,5-Dichloro-3-nitrobenzoic acid
2,5-Dichloro-3-nitrobenzoic acid, ammonium salt
2,5-Dichloro-3-nitrobenzoic acid, iminodi-2,2'-ethanol salt
2-(2,4-Dichlorophenoxy) ethanol
2',5'-Diethoxybenzanilide
p-Diethoxybenzene
2,5-Diethoxy-4-morpholinobenzenediazonium-p-chlorobenzenesulfonate

TABLE D-23. (Continued)

p-Diethylaminobenzenediazonium chloride-zinc chloride
7-Diethylamino-4-methylcoumarin
9,10-Dihydro-9,10-dioxo-1,5-anthracenedisulfonic acid, disodium salt
9,10-Dihydro-9,10-dioxo-1,8-anthracenedisulfonic acid, potassium salt
9,10-Dihydro-9,10-dioxo-2,6-anthracenedisulfonic acid
9,10-Dihydro-9,10-dioxo-2,6-anthracenedisulfonic acid, sodium salt
9,10-Dihydro-9,10-dioxo-1-anthracenesulfonic acid
9,10-Dihydro-9,10-dioxo-1-anthracenesulfonic acid, sodium salt
9,10-Dihydro-1-nitro-9,10-dioxo-2-anthroic acid
1,4-Dihydroxy-2-butanone
1,8-Dihydroxy-4,5-dinitroanthraquinone
6,7-Dihydroxy-2-naphthalenesulfonic acid
3,5-Dihydroxy-2-naphthoic acid
16,17-Dihydroxyviolanthrone
16,17-Dimethoxyviolanthrone
2,2'-Dimethyl-1,1'-bianthraquinone
N,N-Dimethylsulfanilic acid
1,4-Di-p-toluidinoanthraquinone

Dyes

Disperse dyes
[Phthalocyaninato (2-)] copper
Solvent dyes
Toners and lakes
Vat dyes
o-Formylbenzenesulfonic acid
4'-(2-Hydroxyethoxy) acetanilide
N-Hydroxymethylacrylamide terpolymer
3-Hydroxy-2-methylcinchoninic acid
3-Hydroxy-2,7-naphthalenedisulfonic acid, disodium salt
1,1'-Iminobis (4-aminoanthraquinone)
1,1'-Iminobis (5-benzamidoanthraquinone)
1,1'-Iminodianthraquinone
Isethionic acid
Isoviolanthrone
Leuco-1,4-diaminoanthraquinone
Leuco tetrahydroxyanthraquinone
1-Methoxyanthraquinone
1-(Methylamino) anthraquinone
1-(Methylamino)-4-p-toluidinoanthraquinone
N-Methyl-4'-nitroacetanilide
N-Methyl-p-nitroaniline
2-Methyl-1-nitroanthraquinone
N-Methyltaurine
3-Methyl-6-(p-toluidino)-7H-dibenz (f,ij) isoquinoline-2,7 (3H)-dione
1,3,6-Naphthalenetrisulfonic acid
Naphthalimide
2-(4-Nitro-2-anthraquinonyl) anthra (2,3-d)-oxazole-5,10-dione

TABLE D-23. (Continued)

m-Nitrobenzenesulfonic acid, sodium salt
2-(m-Nitrobenzoyl)-o-acetanisidide
5-Nitroisophthalic acid
3-Nitro-1,5-naphthalenedisulfonic acid
4-Nitronaphthalic anhydride
4'-(p-Nitrophenyl) acetophenone
2-(p-Nitrophenyl)-1-octadecyl-5-benzimidazolesulfonic acid
5-Nitro-o-toluenesulfonanilide
5-Nitro-o-toluenesulfonyl chloride
16-Nitroviolanthrone
1-[(7-Oxo-7H-benz [de] anthracen-3-yl) amino] anthraquinone
1,1'-[(7-Oxo-7H-benz [de] anthracen-3,9-ylene) diimino] dianthraquinone
3,4,9,10-Perylenetetracarboxylic acid
3,4,9,10-Perylenetetracarboxylic 3,4:9,10-diimide
4'-Phenylacetophenone
2-Phenylanthra [2,3-d] oxazole-5,10-dione
2,2'-([Phenyl] imino) diethanol
[Phthalocyaninato (2-)] aluminum
[Phthalocyaninato (2-1)] cobalt
Polybromochloro [phthalocyaninato (2-)] copper
Quinizarin
Sarcosine
Sodium m-nitrobenzenesulfonate
Tetrabromo-8,16-pyranthrenedione
1,3,6,8-Tetrabromopyrene
1,4,5,8-Tetrachloroanthraquinone
Tetrachloroviolanthrone
1,4,5,8-Tetrakis (1',1'',1''',1''''-anthraquinonylamino) anthraquinone
3,3'-Thiobis [7H-benz (de) anthracen-7-one]
p-Toluenesulfonic acid, 2-chloroethyl ester
N^2,N^4,N^6-Trichloromelamine
1,2,4-Trihydroxyanthraquinone
Products N.E.C.
4-(4-Pyrrolidinyl-m-tolylazo) benzenesulfonic acid

15 Market Street
Paterson, New Jersey 07501

Carbazole violet

Dyes
Toners and lakes

Riverside Avenue
Rensselaer, New York 12144

5-Acetamido-2-aminobenzenesulfonic acid
p-Acetanisidide
3'-Aminoacetanilide
4'-Aminoacetanilide

TABLE D-23. (Continued)

5-Amino-2-(p-aminoanilino) benzenesulfonic acid
7-(p-Aminobenzamido)-4-hydroxy-2-naphthalenesulfonic acid
2-Amino-p-benzenedisulfonic acid
p-Aminobenzoic acid, butyl ester
1-Amino-2-bromo-4-hydroxyanthraquinone
2-Amino-4-chlorophenol
4'-Amino-2',5'-diethoxybenzanilide
p-Amino-N-ethyl-N-1-naphthylbenzamide
2-Amino-N-ethyl-5-nitrobenzenesulfonanilide
4-Amino-3-hydroxy-1-naphthalenesulfonic acid
3-Amino-1,5-naphthalenedisulfonic acid
7-Amino-1,3-naphthalenedisulfonic acid
5-Amino-2-naphthalenesulfonic acid
8-Amino-2-naphthol
2-Amino-4-nitrophenol
2-Amino-5-nitrophenol
4-Amino-4'-nitro-2,2'-stilbenedisulfonic acid
p-[(p-Aminophenyl) azo] benzenesulfonic acid
5-Amino-o-toluenesulfonanilide
7-Anilino-4-hydroxy-2-naphthalenesulfonic acid
m-Anilinophenol
3-Anilinopropionitrile
o-Anisidinomethanesulfonic acid
Anthra [1,9-cd] Pyrazol-6 (2H)-one
(1-Anthraquinonyl)-1,2-hydrazinedisulfonic acid, disodium salt
1-(4-Benzamido-2,5-diethoxyphenyl)-3-[methyl-3-(2-sulfoethyl) triazene]
N-(4-Benzamido-6-methoxy-m-tolyl)-N-(methylazo) glycol
Benzo (b) thiophen-3 (2H) one
o-Benzoylbenzoic acid
N,N'-Bis (1-chloro-2-anthraquinonyl)-4',4'''-azobis-4-biphenylcarboxamide
4,4'-Bis (diethylamino) benzhydrol
4,4'-Bis (diethylamino) benzhydrol, 2,6-naphthalenesulfonate
3'-[Bis (2-hydroxyethyl) amino] acetanilide
2-Bromo-4'-nitroacetophenone
Carbazole violet
N,N'-Carbonylbis (4-methoxymetanilic acid)
N,N'-Carbonylbis (4-methoxy-6-nitrometanilic acid)
3-Carboxy-2 (and 4)-hydroxybenzenediazonium sulfate
o-[(Carboxymethyl) thio] benzoic acid
3-(2-Carboxy-4-sulfophenyl)-3-ethyl-1-(5-nitro-o-anisyl) triazine
4-Chloro-o-anisidine hydrochloride
o-(p-Chlorobenzoyl) benzoic acid

TABLE D-23. (Continued)

4,4'-(o-Chlorobenzylidene) di-2,5-xylidine
2-Chloro-1,4-diethoxy-5-nitrobenzene
5-Chloro-2,4-dimethoxyaniline
4-Chloro-N,N-dimethyl-3-nitrobenzenesulfonamide
2-Chloro-4,6-dinitroaniline
N-(2-Chloroethyl)-4-(2-chloro-4-nitrophenylazo)-N-ethylaniline
[4-(2-Chloroethyl) ethylamino] o-tolualdehyde
N-(2-Chloroethyl)-N-ethylaniline
p-[(2-Chloroethyl) methylamino] benzaldehyde
4-Chloro-3-hydrazinobenzenesulfonic acid
4-Chloro-5-hydroxy-2,7-naphthalene disulfonic acid
4-Chlorometanilic acid
6-Chlorometanilic acid
5-Chloro-2-methoxybenzenediazonium chloride
4-Chloro-3-(3-methyl-5-oxo-2-pyrazolin-1-yl) benzenesulfonic acid
4-Chloro-3-nitrobenzenesulfonamide
4-Chloro-3-nitrobenzenesulfonic acid
4-Chlororesorcinol
1-(5-Chloro-o-tolyl)-1-tetrazene
[(4-Chloro-o-tolyl) thio] acetic acid
4-Chloro-α,α,α-trifluoro-3-nitrotoluene
4-([2-Cyanoethyl] ethylamino)-o-tolualdehyde
p-([2-Cyanoethyl] methylamino) benzaldehyde
4-Decyloxy-2-hydroxybenzophenone
4,4'-Diamino-2,2'-stilbenedisulfonic acid
3,5-Diamino-p-toluenesulfonic acid
1,5-Dibenzoylnaphthalene
2,5-Dichloro-4-hydrazinobenzenesulfonic acid
2,5-Dichloro-4-(3-methyl-5-oxo-2-pyrazolin-1-yl) benzenesulfonic acid
2,6-Dichloro-4-nitroaniline
N-[(2,5-Dichlorophenyl)azo]-N-ethyl-5-sulfoanthranilic acid
1-(2,5-Dichlorophenyl)-3-triazinecarbonitrile
2,6-Dichlorotoluene
p-(Diethylamino) benzaldehyde
N,N-Diethyl-p-nitrosoaniline
N,N-Diethyl-4-nitroso-m-phenetidine
N,N-Diethyl-m-phenetidine
4-(2,3-Dihydro-3-oxobenzo [b] thiophen-2-yl-methyl idene)-m-benzenedisulfonic acid
m-Dimethoxybenzene
p-Dimethylaminobenzaldehyde
N,N-Dimethyl-3-nitro-p-toluenesulfonamide
N-([4-(Dimethylsulfamoyl)-o-tolyl] azo)-N-methyl-5-sulfoanthranilic acid
p-(2,4-Dinitroanilino) phenol
4,4'-Dinitrostilbene-2,2'-disulfonic acid
3,5-Dinitro-p-toluenesulfonic acid
1,5-Diphenoxyanthraquinone

TABLE D-23. (Continued)

Dyes

Acid dyes
Azoic coupling components
Azoic diazo components
Azoic dyes and components
Basic dyes
Direct dyes
Disperse dyes
Fluorescent brightening agents
Mordant dyes
[Phthalocyaninato (2-)] copper
Solvent dyes
Toners and lakes
α-(N-Ethylanilino)-m-toluenesulfonic acid
3-Ethyl-2-[3-(3-ethyl-2-benzothiazolinylidene) pentadienyl] benzothiazolium iodide
2-Ethylhexyl cyanoacetate
3-(N-Ethyl-m-toluidino) propionitrile
4-Formyl-m-benzenedisulfonic acid
p-Hydrazinobenzenesulfonic acid
4-Hydrazino-m-toluenesulfonic acid
2-Hydroxy-4-methoxybenzophenone
8-Hydroxy-1-naphthalenesulfonic acid
4-Hydroxy-2-naphthalenesulfonic acid, benzene sulfonate, sodium salt
N-(7-Hydroxy-1-naphthyl) acetamide
4-Hydroxy-7-(p-nitrobenzamido)-2-naphthalene-sulfonic acid
2-Hydroxy-4-octyloxobenzophenone
Metanilanilide
4-Methoxymetanilic acid
3-Methylbenzo (f) quinoline
4,4'-Methylenebis (N,N-diethylaniline)
4,4'-Methylenebis (N,N-dimethylaniline)
4,4'-Methylenebis (N,N-dimethyl-3-nitroaniline)
2-Methylindole-3-carboxyaldehyde
m-(3-Methyl-5-oxo-2-pyrazolin-1-yl) benzenesulfonic acid
p-(3-Methyl-5-oxo-2-pyrazolin-1-yl) benzenesulfonic acid
4-(3-Methyl-5-oxo-2-pyrazolin-1-yl)-m-toluenesulfonic acid
1-Methyl-2-phenylindole
1-Methyl-2-phenylindole-3-carboxaldehyde
N-Methyl-5-sulfoanthranilic acid
1-Naphthol-3-sulfonamide
Naphth (1,2-d) (1,2,3) oxadiazole-5-sulfonic acid
1-Naphthylamine hydrochloride
3'-Nitroacetanilide
4'-Nitroacetanilide
3'-Nitro-p-acetanisidide
4'-Nitrobenzanilide
3'-Nitrobenzenesulfonanilide
m-Nitrobenzenesulfonyl chloride
6-Nitro-2-benzoxazolinone
7- (and 8)-Nitronaphth (1,2-d) (1,2,3) oxadiazole-5-sulfonic acid

TABLE D-23. (Continued)

3 (and 5)-Nitrosalicylic acid
4-Nitrostilbene
5-Nitro-o-toluenesulfonic acid
4'-Nitro-p-toluenesulfono-o-toluidide
4-Nitro-o-toluidine
5-Oxo-1-(p-sulfophenyl)-2-pyrazoline-3-carboxylic acid
p-(Phenylazo) aniline hydrochloride
1-Phenyl-3-carbethoxy-5-pyrazolone
m-Phenylenediamine
2,4-Quinolinediol
4-4'-Sulfonyldiphenol
2,2',4,4'-Tetrahydroxybenzophenone
2,2'-Thiobis (5-nitrobenzenesulfonic acid)
6,6'-Thiodimetanilic acid
Toluene-2,4-diamine
Toluene-2,4-disulfonic acid
p-Toluenesulfono-o-toluidide
N-(p-Tolylazo) sarcosine
4-(o-Tolyazo)-o-toluidine
4-(o-Tolylazo)-o-toluidine hydrochloride
2,3,3-Trimethyl-3H-indole
1,3,3-Trimethyl-indolineacetaldehyde
1,3,3-Trimethyl-2-methyleneindoline
7,7'-Ureylenebis (4-hydroxy-2-naphthalenesulfonic acid)
Violanthrone
4-(Xylylazo) xylidine, mixed
Products N.E.C.
Cationic dyes

TABLE D-24. HERCULES INCORPORATED

910 Market Street
Wilmington, Delaware 19899

Coatings & Specialty Products Department
P.O. Box 231
Glens Falls, New York 12801

Dyes

[Phthalocyaninato (2-)] copper
Toners and lakes

TABLE D-25. PHILIP A. HUNT CHEMICAL CORPORATION

Roosevelt Place
Palisades Park, New Jersey 07650

Wayland Chemical Division
Industrial Circle, P.O. Box "O"
Lincoln, Rhode Island 02865

4-Methyl-1-phenyl-3-pyrazolidinone
1-Phenyl-3-pyrazolidinone

Industrial Dyestuff Company, subsidiary
Massasoit Avenue, P.O. Box 4249
East Providence, Rhode Island 02914

1-Allyl-3-(2-hydroxyethyl)-2-thiourea
2-(N-(2,4-Di-tert-amylphenoxyacetyl) amido)-4,6-dichloro-5-methylphenol
p-Diazo-N,N-dimethylaniline-1-amino-8-naphthol-3-sulfonate-6-sulfonic acid, sodium salt
p-Diethylaminobenzenediazonium chloride-zinc chloride
N,N-Diethyltoluene-2, 5-diamine, monohydrochloride
6,7-Dihydroxy-2-naphthalenesulfonic acid
p-Dimethylaminobenzenediazonium chloride-zinc chloride
4-(2',6'-Dimethylmorpholinyl) benzenediazonium chloride-zinc chloride
p-(Ethyl (2-hydroxyethyl) amino) benzenediazonium chloride-zinc chloride
N-Ethyl-N-hydroxyethyl-p-phenylenediamine sulfate
N-B-Hydroxyethyl-2, 4-dihydroxybenzamide
p-((2-Hydroxyethyl) methylamino) benzenediazonium chloride-zinc chloride
3-Hydroxy-N-(2-hydroxyethyl)-2-naphthamide
3-Hydroxy-N-(3-N-morpholinopropyl)-2-naphthamide
m-Hydroxyphenylurea
N-Methyl-N-β-hydroxyethyl-p-phenylenediamine sulfate
Sodium formaldehyde bisulfite

TABLE D-26. ICI UNITED STATES INC.

(Owned by Imperial Chemical Industries Limited)
(London, England)
Wilmington, Delaware 19899

Dyes & Textile Chemicals Division
New Murphy Road & Concord Pike
Wilmington, Delaware 19899

Dighton, Massachusetts 02715
333 Main Street

- N,N-Dibenzylsulfanilic acid
- Dyes
  - Acid dyes
  - Fiber-reactive dyes
  - Vat dyes

TABLE D-27. INDOL CHEMICAL CO., INC.*

Leffert Street
Carteret, New Jersey 07008

Dyes

(Phthalocyaninato (2-)) copper
Toners and lakes **

Products N.E.C.

Organic pigments, azo reds and violets
Organic pigments, benzidine yellows
Organic pigments, dianisidine blue and orange
Organic pigments, phthalocyanine blue and green
Organic pigments, thioindigo pigments

---

* Not listed by Synthetic Organic Chemicals in 1972 or 1973

** An expansion is under construction which will increase capacity for azoic and phthalo dry pigments by 25%; completion of the 500-thousand-dollar plant is scheduled for early 1974.

TABLE D-28. INDUSTRIAL COLOR INC.*

Industry Avenue
Post Office Box 944
Joliet, Illinois 60434

Dyes

Toners and lakes

Pigments

Benzidine yellow
Red lake C

---

*Not listed by Synthetic Organic Chemicals in 1972 or 1973

TABLE D-29. INMONT CORPORATION

(Formerly Interchemical Corporation)
1133 Avenue of the Americas
New York, New York 10036

150 Wagaraw Road
Hawthorne, New Jersey 07506

2-Amino-p-benzenedisulfonic acid
1-Amino-2-bromo-4-hydroxyanthraquinone
1-Amino-2, 4-dibromoanthraquinone
3-Amino-4-methoxybenzamide
3-Amino-4-methylbenzamide
4-Chloro-3-nitrobenzenesulfonamide
1,5 (and 1,8)-Dinitroanthraquinone
1,5 (and 1,8)-Diphenoxyanthraquinone

Dyes

Direct dyes
Disperse dyes
(Phthalocyaninato (2-)) copper
Toners and lakes

Eosin
Fluorescein
Hexadecachlorophthalocyanine
3-(N-(2-Hydroxyethyl) anilino) propionitrile
4-Hydroxy-1-methylcarbostyril
3-Hydroxy-2-methylcinchoninic acid
3-Hydroxy-4-(phenylazo)-2-naphthoic acid
4-Hydroxy-2-quinaldinic acid
Leuco-1, 4-diaminoanthraquinone
Leuco quinizarin
Leuco tetrahydroxyanthraquinone
N-Methylanthranilic acid
N-Methyl-4-hydroxyquinolone-2
6-Nitro-2-aminobenzothiazole
Quinizarin

TABLE D-30. KEWANEE OIL COMPANY

40 Morris Avenue
Bryn Mawr, Pennsylvania 19010

Harshaw Chemical Company, division
1945 East 97th Street
Cleveland, Ohio 44106

Pigment and Ceramic Department
3415 Bardstown Road
Louisville, Kentucky 40218

2-Chloroquinizarin
1,4-Diaminoanthraquinone
2,6-Dichloro-4-nitroaniline

Dyes

Acid dyes
Direct dyes
Disperse dyes
Mordant dyes
(Phthalocyaninato (2-)) copper
Solvent dyes
Toners and lakes

Leuco-1, 4-diaminoanthraquinone
Leuco quinizarin
Quinizarin
2-Quinizarinsulfonic acid
General and Compounded Products
Alizarin dyes
Anthracene chrome dyes
Anthraquinone dyes
Diphenyl dyes
Inorganic pigments and dyes
Phthalocyanine dyes, blues and greens
Toluidine reds

Textile Color Department
P.O. Box 848
Lowell, North Caroline 28098

Dyes

Acid dyes
Direct dyes
Disperse dyes
Mordant dyes

TABLE D-31. KEYSTONE COLOR WORKS, INC.

151 West Gay Avenue
York, Pennsylvania 17403

Dyes

Toners and lakes

TABLE D-32. H. KOHNSTAMM & CO., INC.

161 Avenue of the Americas
New York, New York 10013

Lois and Lemuel Avenues
Camden, New Jersey 08105

Alumina, activated, calcined and hydrated
Aluminum hydroxide
6-Hydroxy-2-naphthalenesulfonic acid, sodium salt
Sulfanilic acid and salts

Pigments Division
537 Columbia Street
Brooklyn, New York 11231

Dyes

Food, drug and cosmetic colors
Toners and lakes

Lois and Lemuel Avenues
Camden, New Jersey 08105

Dyes

Toners and lakes

TABLE D-33. C. LEVER COMPANY, INC.

736 Dunks Ferry Road
Cornwells Heights, Pennsylvania 19020

Philadelphia, Pennsylvania 19133

Dyes

Toners and lakes

TABLE D-34. MAGRUDER COLOR COMPANY, INC.

One Virginia Street
Newark, New Jersey 07114

Dyes

[Phthalocyaninato (2-)] copper
Toners and lakes

TABLE D-35. MARTIN MARIETTA CORPORATION

(Consolidation of American-Marietta and
The Martin Company)
277 Park Avenue
New York, New York 10017

Martin Marietta Chemicals
277 Park Avenue
New York, New York 10017

Sodyeco Division
P.O. Box 10098
Charlotte, North Carolina 28201

Sodyeco, North Carolina 28100

3-Amino-9-ethylcarbazole
o-Aminophenol
p-Aminophenol
2-Bromo-6-chloro-4-nitroaniline
2-Bromo-4,6-dinitroaniline
1-Chloro-2,4-dinitrobenzene
4-Chloro-1,3-phenylenediamine
2-Chloro-1, 3-phenylenediamine-5-sulfonic acid
2,2'-Diaminodiphenyl disulfide
4,4'-Diaminodiphenyldisulfide
2,6-Dibromo-4-nitroaniline
Difurfurylidene pentaerythritol
2,4-Dinitroaniline
2,4-Dinitrophenol

Dyes

Disperse dyes
Sulfur dyes
Toners and lakes
Vat dyes

9-Ethylcarbazole
3-Nitro-9-ethylcarbazole
p-Nitrophenol
m-Nitro-p-phenylenediamine
4-Nitro-1,2-phenylenediamine
4-Nitrophthalimide
p-Nitrosophenol
p-Phenhlenediamine
Picric acid
Sodium picramate
1,3,6,8-Tetranitrocarbazole
Products N.E.C.
  Violet Pigment 23 Base (C.I. No. 51319)

TABLE D-36. MAX MARX COLOR AND CHEMICAL COMPANY

192 Colt Street
Irvington, New Jersey 07111

Dyes

Azoic dyes and components
Toners and lakes

General and Compounded Products

Pyrazolone Intermediates

TABLE D-37. OTTO B. MAY, INC.

(Owned 80% by Cone Mills Corporation)
52 Amsterdam Street
Newark, New Jersey 07105

1-Aminoanthraquinone and salt
1-Amino-4-benzamidoanthraquinone
1-Amino-5-benzamidoanthraquinone
1-Amino-2-chloroanthraquinone
1-Amino-5-chloroanthraquinone
1-Amino-8-chloroanthraquinone
2-Amino-3-chloroanthraquinone
Anthra [1,9-cd] pyrazol-6 (2H)-one
3-(1-Anthraquinonylamino-7H-benz(dejanthracen)-7-dione
1-Benzamido-5-chloroanthraquinone
7H-Benz (de) anthracen-7-one
(3,3'-Bi-7H-benz [de] anthracen)-7,7'-dione
(4,4'-Bi-7H-benz [de2 anthracen)-7,7'-dione
1,4-Bis-(1-anthraquinonylamino) anthraquinone
3-Bromo-7H-benz (de) anthracen-7-one
1-[(9-Bromo-7-oxo-7H-benz [de] anthracen-3-yl) amino]-anthraquinone
1-Chloroanthraquinone
1-Chloro-5-nitroanthraquinone
1-Chloro-8-nitroanthraquinone
4,5'-Dibenzamido-1, 1'-iminodianthraquinone
3,9-Dibromeo-7H-benz (de) anthracen-7-one
7,16-Dichloro-6,15-dihydro-5,9,14,18-anthrazinetetrone
9.10-Dihydro-9, 10-dioxo-1-anthracenesulfonic acid
9,10-Dihydro-9, 10-dioxo-1-anthracenesulfonic acid, sodium salt
9,10-Dihydro-5-nitro-9, 10-dioxo-1-anthracenesulfonic acid
16,17-Dihydroxyviolanthrone
16,17-Dimethoxyviolanthrone
10,10'-Dinitro (3,3'-bi-7H-benz[de]anthracen)-7,7'-dione

Dyes
Azoic diazo components
Vat dyes
1,1'-Iminobis (4-aminoanthraquinone)
1,1'-Iminobis (4-benzamidoanthraquinone)
1,1'-Iminobis (5-benzamidoanthraquinone)
1,1'-Iminobis-4-nitroanthraquinone
1,1'-Iminodianthraquinone
Isoviolanthrone
Leuco-1,4-diaminoanthraquinone
S-Methylisothiourea sulfate
1-Nitroanthraquinone
m-Nitrobenzenesulfonic acid, sodium salt
16-Nitroviolanthrone
1-[(7-Oxo-7H-benz[de] anthracen-3-yl) amino] anthraquinone

TABLE D-37. (Continued)

1,1'-[7-Oxo-7H-benz [de] anthracen-3,9-ylene) diimino] dianthraquinone
Quinizarin
Violanthrone

TABLE D-38. MEDICAL CHEMICAL CORPORATION*

1713 20th Street
Santa Monica, California 90404

Dyes
  Basic dyes

*Not listed by Synthetic Organic Chemicals in 1972 or 1973

TABLE D-39. MOBAY CHEMICAL CORPORATION

(formerly Baychem Corporation)
owned by Bayer AG of Leverbusen, West Germany
Penn Lincoln Parkway West
Pittsburgh Pennsylvania 15205

Verona Division
(Formerly Verona Corporation)
Springfield Road, P.O. Box 385
Union, New Jersey 07083

Bayonne, New Jersey 07002 (2 Plants)
169 West 52nd Street and Hobart Avenue and 2nd Street

- 2-(p-Aminoanilino)-5-nitrobenzenesulfonic acid
- 7-(p-Aminobenzamido)-4-hydroxy-2-naphthalenesulfonic acid
- 8-Amino-2-naphthol
- 1-Amino-6-naphthol hydrochloride
- 1-Amino-7-naphthol hydrochloride
- 4-Amino-2-nitrophenol
- 5-(p-Aminophenylazo)salicylic acid
- Anilinomethanesulfonic acid
- o-Anisidinomethanesulfonic acid
- 4-Chloro-2-nitroaniline
- 2,6-Diaminoanthraquinone
- 4,8-Diaminoanthrarufin
- 3,4'-Diaminobenzanilide
- 2,4-Diaminophenol dihydrochloride
- 4,4'-Diamino-2,2'-stilbenedisulfonic acid
- 1,5-Dibenzoylnaphthalene
- 2,5-Dichloro-4-3-methyl-5-oxo-2-pyrazolin-1-yl) benzenesulfonic acid
- 1,4-Dichloro-2-nitrobenzene
- 2,5-Dichlorosulfanilic acid
- 9,10-Dihydro-9, 10-dioxo-2,6-anthracenedisulfonic acid
- 9,10-Dihydro-9, 10-dioxo-2,6-anthracenedisulfonic acid, sodium salt
- 1,5-Dihydroxy-4,8-dinitroanthraquinone
- 2,5-Dimethyl-4-chlorophenyl mercaptoacetic acid
- 1,5-Diphenoxyanthraquinone
- 1,4-Di-p-toluidinoanthraquinone
- Dyes
  - Acid dyes
  - Cationic dyes
  - Direct dyes
  - Disperse dyes
  - Fiber-reactive dyes
  - Fluorescent brightening agents
  - Ingrain dyes
  - Mordant dyes
  - Vat dyes

2-Ethyl-2-phenylmalonic acid, diethyl ester

TABLE D-39. (Continued)

o-Formylbenzenesulfonic acid
4-Hydroxymetanilamide
8-Hydroxy-1-naphthalenesulfonic acid
Metanilamide
3-Methyl-1-(6-chloro-3-sulfophenyl)-5-pyrazolone
3-Methyl-1-(2,5-dichlorosulfanilic)-5-pyrazolone
3-Methyl-1-(4-methylphenyl)-5-pyrazolone, tech.
m-(3-Methyl-5-oxo-2-pyrazolin-1-yl) benzenesulfonamide
p-(3-Methyl-5-oxo-2-pyrazolin-1-yl) benzenesulfonic acid
3-Methyl-1-phenyl-2-pyrazolin-5-one
Naphth (1,2-d) (1,2,3) oxadiazole-5-sulfonic acid
7-(and8)-Nitronaphth (1,2-d) (1,2,3) oxadiazole-5- sulfonic acid
1-(m-Nitrophenyl)-5-oxo-2-pyrazoline-3-carboxylic acid
5-Oxo-1-(3-Aminophenyl)-2-pyrazoline-3-carboxylic acid
5-Oxo-1-phenyl-2-pyrazoline-3-carboxylic acid
5-Oxo-1-(p-sulfophenyl)-2-pyrazoline-3-carboxylic acid
5-Oxo-1-(p-sulfotolyl)-2-pyrazoline-3-carboxylic acid
Phenylhydrazine hydrochloride
p-Toluenesulfonic acid, ethyl ester
p-Toluenesulfonic acid, methyl ester
m-Toluidinomethanesulfonic acid
o-Toluidinomethanesulfonic acid
p-Tolyl-3-methyl-5-pyrazolone
1,3,3-Trimethyl-indolineacetaldehyde
1,3,3-Trimethyl-2-methyleneindoline
7,7'-Ureylenebis (4-hydroxy-2-naphthalenesulfonic acid)

Charleston, South Carolina 29411
P.O. Box 10288

2-(p-Aminoanilino)-5-nitrobenzenesulfonic acid
7-(p-Aminobenzamido)-4-hydroxy-2-naphthalenesulfonic acid
8-Amino-2-naphthol
1-Amino-6-naphthol hydrochloride
1-Amino-7-naphthol hydrochloride
4-Amino-2-nitrophenol
Anilinomethanesulfonic acid
4-Chloro-2-nitroaniline

Dyes
- Acid dyes
- Cationic dyes
- Direct dyes
- Disperse dyes
- Fiber-reactive dyes
- Vat dyes

TABLE D-39. (Continued)

8-Hydroxy-1-naphthalenesulfonic acid
Metanilamide
3-Methyl-1-(6-chloro-3-sulfophenyl)-5-pyrazolone
3-Methyl-1-(2,5-dichlorosulfanilic)-5-pyrazolone
3-Methyl-1-(4-methylphenyl)-5-pyrazolone, tech.
m-(3-Methyl-5-oxo-2-pyrazolin-1-yl) benzenesulfonamide
p-(3-Methyl-5-oxo-2-pyrazolin-1-yl) benzenesulfonic acid
3-Methyl-1-phenyl-2-pyrazolin-5-one
Naphth (1,2-d) (1,2,3) oxadiazole-5-sulfonic acid
7-(and 8)-Nitronapth (1,2-d) (1,2,3) oxadiazole-5-sulfonic acid
5-Oxo-1-(3-Aminophenyl)-2-pyrazoline-3-carboxylic acid
5-Oxo-1-phenyl-2-pyrazoline-3-carboxylic acid
5-Oxo-1-(p-sulfophenyl)-2-pyrazoline-3-carboxylic acid
5-Oxo-1-(p-sulfotolyl)-2-pyrazoline-3-carboxylic acid
Sarcosine
p-Tolyl-3-methyl-5-pyrazolone

TABLE D-40. MORTON-NORWICH PRODUCTS, INC.

110 North Wacker Drive
Chicago, Illinois 60606

Morton Chemical Company, division
110 North WAcker Drive
Chicago, Illinois 60606

335 McLean Boulevard
Paterson, New Jersey 07504

Dyes
- Disperse dyes
- Fluorescent brightening agents
- Solvent dyes
- Toners and lakes

TABLE D-41. NYANZA INC.

Magunco Road
Ashland, Massachusetts 01721

7-(p-Aminobenzamido)-4-hydroxy-2-naphthalenesulfonic acid
3-Amino-5-chloro-2-hydroxybenzenesulfonic acid
2-Amino-4-chloro-6-nitrophenol
7-Amino-4-hydroxy-2-naphthalenesulfonic acid, sodium salt
4'-Amino-N-methylacetanilide
8-Amino-2-naphthol
3'-Amino-oxanilic acid
p-(p-Aminophenyl)azo] benzenesulfonic acid
6-Anilino-4-hydroxy-2-naphthalenesulfonic acid
7-Anilino-4-hydroxy-2-naphthalenesulfonic acid
8-Anilino-1-naphthalenesulfonic acid
Anthrarufin
7H-Benz (de) anthracen-7-one
1-Chloro-2-methylanthraquinone
4-Chloro-3-nitrobenzenesulfonamide
2-Chloro-5-nitrobenzenesulfonic acid
1,4-Diaminoanthraquinone
1,4-Diamino-2,3-dichloroanthraquinone
1,5-Dibenzoylnaphthalene
2,5-Dichloro-4-(3-methyl-5-oxo-2-pyrazolin-1-yl) benzenesulfonic acid
2,5-Dichlorosulfanilic acid
1,5 (and 1,8)-Dihydroxyanthraquinone
2,2'-Dimethyl-1,1'-bianthraquinone
1,4-Di-p-toluidinoanthraquinone
Dyes
  Acid dyes
  Direct dyes
  Mordant dyes
  Oxidation bases
  Solvent dyes
  Vat dyes
4-Hydroxymetanilamide
8-Hydroxy-1-naphthalenesulfonic acid, y-sultone
N-(7-Hydroxy-1-naphthyl) acetamide
1,1'-Iminobis (4-aminoanthraquinone)
7,7'-Iminobis (4-hydroxy-2-naphthalenesulfonic acid)
Metanilamide
4-Methoxymetanilic acid
m-(3-Methyl-5-oxo-2-pyrazolin-1-yl) benzenesulfonamide
p-(3-Methyl-5-oxo-2-pyrazolin-1-yl)benzenesulfonic acid
4-(3-Methyl-5-oxo-2-pyrazolin-1-yl)-m-toluenesulfonic acid
Naphth (1,2-d) (1,2,3) oxadiazole-5-sulfonic acid
3-Nitro-p-toluenesulfonic acid
Pyranthrone
Quinizarin
4-Sulfoanthranilic acid
7,7'-Ureylenebis (4-hydroxy-2-naphthalenesulfonic acid)

TABLE D-42. PASSAIC COLOR & CHEMICAL COMPANY

28-36 Paterson Street
Paterson, New Jersey 07501

Dyes
- Acid dyes
- Basic dyes
- Solvent dyes

TABLE D-43. PFISTER CHEMICAL, INC.

Linden Avenue
Ridgefield, New Jersey 07657

Charlotte, North Carolina 28213

General and Compounded Products
Azogen printing colors

Ridgefield, New Jersey 07657

3-Amino-p-anisanilide
2-Amino-5-nitrothiazole
Benzanilide
4-Benzoyl-2,5-diethoxyaniline
Bromoresorcylic acid
N'-Butyl-4-methoxymetanilamide
4-Chloro-o-anisidine
5-Chloro-2,4-dimethoxyaniline
4'-Chloro-3-hydroxy-2',5'-dimethoxy-2-naphthanilide
5'-Chloro-3-hydroxy-2',4'-dimethoxy-2-naphanilide
3'-Chloro-3-hydroxy-2-naphthanilide
4'-Chloro-3-hydroxy-2-naphthanilide
5'-Chloro-3-hydroxy-2-naphth-o-anisidide
4'-Chloro-3-hydroxy-2-naphtho-o-toluidide
5'-Chloro-3-hydroxy-2-naphtho-o-toluidide
5-Chlorosalicylanilide
4-Chloro-o-toluidine
5-Chloro-o-toluidine
2,5-Dimethoxyaniline
3-Hydroxy-2',5'-dimethoxy-2-naphthanilide
3-Hydroxy-2-naphthanilide
3-Hydroxy-2-naphth-o-anisidide
3-Hydroxy-2-naphth-p-anisidide
3-Hydroxy-2-naphthoic acid
3-Hydroxy-2-naphthoic acid, sodium salt
3-Hydroxy-2-naphtho-o-phenetidide
3-Hydroxy-2-naphtho-p-phenetidide
3-Hydroxy-2-naphtho-o-toluidide
3-Hydroxy-2-naphtho-p-toluidide
3-Hydroxy-2-naphtho-2',4'-xylidide
3-Hydroxy-N-1-naphthyl-2-naphthamide
3-Hydroxy-N-2-naphthyl-2-naphthamide
3-Hydroxy-3'-nitro-2-naphthanilide
4-Methyl-7-diethylaminocoumarin
2-Methyl-5-nitroaniline
5-Nitro-o-toluidine
2-Nitro-4-trifluoromethyl chlorobenzene
Resorcinol monohydroxy ethyl ether
Salicylanilide
5-Sulfoisophthalic acid, 1,3-dimethyl ester, potassium salt
5-Sulfoisophthalic acid, 1,3-dimethyl ester, sodium salt
5-Sulfoisophthalic acid, potassium salt

TABLE D-43.(Continued)

5-Sulfoisophthalic acid, sodium ammonium salt
5-Sulfoisophthalic acid, sodium salt
Terephthaloyl-bis-acetyl-bis-5-chloro-2,4-dimethoxyaniline
2,2'-Terephthaloylbis (5'-chloro-2',4'-dimethoxyacetanilide)
4-(o-Tolyazo)-o-toluidine
Trihydroxydiphenyl

TABLE D-44. PPG INDUSTRIES INC.

(Formerly Pittsburgh Plate Glass Company)
One Gateway Center
Pittsburgh, Pennsylvania 15222

Pigments*

*Plant location not identified.

TABLE D-45. RIDGWAY COLOR AND CHEMICAL

75 Front Street
Ridgway, Pennsylvania 15853

Pigments

TABLE D-46. SANDOZ-WANDER, INC.

(Owned by Sandoz Ltd. of Switzerland)
Route 10
East Hanover, New Jersey 07936

See also: Toms River Chemical Corporation

Colors and Chemicals Division
Route 10, East Hanover, New Jersey 07936

Dyes
  Toners and lakes

Fair Lawn, New Jersey 07410

Dyes
  Fluorescent brightening agents

Paterson, New Jersey 07500

Dyes
  Toners and lakes

TABLE D-47. THE SHERWIN-WILLIAMS CO.

101 Prospect Avenue
Cleveland, Ohio 44101

Sherwin-Williams Chemicals Division
P.O. Box 6520
Cleveland, Ohio 44101

11541 South Champlain Avenue
Chicago, Illinois 60628

2-Amino-1-naphthalenesulfonic acid
2-Nitro-p-cresol
2-Nitro-p-toluidine
Alkali blue pigment

St. Bernard, Ohio 45217

N-Acetylanthranilic acid
Anthranilamide
Anthranilic acid
N-Benzyldimethylamine
6-Bromo-5-chlorobenzoxazolone
p-Cresidine
2,6-Dibromo-4-nitrophenol
2,6-Dichloro-2-nitroaniline
Sodium 4-chlorophthalate
Tolyltriazole

TABLE D-48. SOU-TEX CHEMICAL COMPANY, INCORPORATED

(Owned by Casella Farbwerke Mainkur
of West Germany and American Hoechst
Corporation)
East Catawba Avenue
Mount Holly, North Carolina 28120

Dyes
- Direct dyes
- Disperse dyes
- Sulfur dyes
- Vat dyes
- Soluble vat ester dyes

TABLE D-49. STANGE CO.

342 North Western Avenue
Chicago, Illinois 60612

Dyes
  Food, drug and costmetic colors

TABLE D-50. STERLING DRUG INC.

90 Park Avenue
New York, New York 10016

The Hilton-Davis Chemical Company, division
2235 Langdon Farm Road
Cincinnati, Ohio 45237

Cincinnati, Ohio 45237

Acetoacet-o-anisidide
4,4'-Bis (diethylamino) benzophenone
4,4'-Bis (dimethylamino) benzhydrol
4,4'-Bis (dimethylamino) benzophenone
N,N-Diethylaniline
m-(Dimethylamino) benzoic acid
Dyes
Acid dyes
Azoic coupling components
Azoic diazo components
Basic dyes
Direct dyes
Fluorescent brightening agents
Food, drug and cosmetic colors
[Phthalocyaninato (2-)] copper
Solvent dyes
Toners and lakes
N-Ethylaniline
N-Ethyl-N-phenylbenzylamine
4,4'-Methylenebis (N,N-dimethylaniline)
m-Nitrobenzoic acid
Salicylic acid, technical

Thomasset Colors Division

120 Lister Avenue
Newark, New Jersey 07105

Dyes
Food, drug and cosmetic colors
[Phthalocyaninato (2-)] copper
Toners and lakes
Hexadecachlorophthalocyanine
6-Hydroxy-2-naphthalenesulfonic acid, sodium salt

TABLE D-51. SUN CHEMICAL CORPORATION*

200 Park Avenue
New York, New York 10017

Chemicals Group
411 Sun Avenue
Cincinnati, Ohio 45232

Pigments Division East
441 Tompkins Avenue
Staten Island, New York 10305

185 Foundry Street
Newark, New Jersey 07105

- Perylene
- Quinacridone

Rosebank, New York 10305

- Dyes
  - Food, drug and cosmetic colors
- General and Compounded Products
  - Azo pigments
  - Copper phthalocyanine pigments

Pigments Division West

4526 Chickering Avenue
Cincinnati, Ohio 45232

- General and Compounded Products
  - Azo pigments
  - Copper phthalocyanine pigments
  - Flushed colors

---

*Sun Chemical recently purchased azo pigments technology from Sherwin Williams Company (personal communication from Sherwin-Williams spokesman, 3/20/75).

TABLE D-52. SYNALLOY CORPORATION

P.O. Box 5627
Spartanburg, South Carolina 29301

Blackman Uhler Chemical Division

Spartanburg, South Carolina 29301
- 1-Amino-6-naphthol
- 1-Amino-6,7-naphthol
- 8-Amino-2-naphthol
- 6-Benzoylamino-4-methoxy-m-toluidine
- 4-n-Butyl sulfonamido-o-anisidine
- 4-Chloro-3-aminobenzotrifluoride
- 4-Chloro-o-anisidine
- 4-Chloro-2-nitrotoluene
- 4-Chloro-3-nitrotoluene
- 4-Chloro-o-toluidine
- 5-Chloro-o-toluidine
- 6-Chloro-m-toluidine
- 4-Diethyl sulfonamido-o-anisidine

Dyes
- Azoic dyes and components
- Disperse dyes

3-Hydroxy-2-naphthanilide
3-Hydroxy-2-naphthoic acid
5-Nitro-o-anisidine
5-Nitro-o-toluidine
Sarcosine
4-(o-Tolyazo)-o-toluidine
General and Compounded Products
- Pigments for textiles

TABLE D-53. TENNECO CHEMICALS, INC.
(See: Tenneco, Inc.)

Tenneco Inc.
Tenneco Building
Post Office Box 2511
Houston, Texas 77001

Tenneco Chemicals, Inc.
(A Tenneco Company)
Park 80 Plaza West
Saddlebrook, New Jersey 07662

Cal/Ink Division*
600 California Street
San Francisco, California 94108

Dyes
  Toners and lakes

---

*Chemical Week (March 26, 1975, p. 23) reported that Tenneco will sell all the U.S. assets of Cal/Ink Division to Flint Ink Corporation of Detroit as of May 31, 1975.

TABLE D-54. TOMS RIVER CHEMICAL CORPORATION

(79% owned by Ciba-Geigy Corporation and
21% by Sandoz Ltd.)
P.O. Box 71
Toms River, New Jersey 08753

See also: Ciba-Geigy Corporation

All production is for captive use only.

3-[(2-Acetamido-4-aminophenyl) azo]-1,5-naphthalene-disulfonic acid
3'-Aminoacetanilide
4'-Aminoacetanilide
1-Amino-4-(3-amino-4-sulfoanilino)-9, 10-dihydro-9,10-dioxo-2-anthracenesulfonic acid
1-Amino-4-(4-amino-3-sulfoanilino)-9,10-dihydro-9,10-dioxo-2-anthracenesulfonic acid
2-(p-Aminoanilino)-5-nitrobenzenesulfonic acid
1-Aminoanthraquinone and salt
2-Aminoanthraquinone and salt
1-Amino-4-benzamidoanthraquinone
1-Amino-5-benzamidoanthraquinone
7-(m-Aminobenzamido)-4-hydroxy-2-naphthalenesulfonic acid
7-(p-Aminobenzamido)-4-hydroxy-2-naphthalenesulfonic acid
3'-Aminobenzanilide-4'-sulfonic acid
2-Amino-p-benzenedisulfonic acid
N-(4-Amino-3-bromo-1-anthraquinonyl)-p-toluidinesulfonic acid
1-Amino-4-bromo-9,10-dihydro-9,10-dixox-2- anthracenesulfonic acid and sodium salt
1-Amino-2-bromo-4-hydroxyanthraquinone
1-Amino-2-brome-4-p-toluidinoanthraquinone
1-Amino-5-chloroanthraquinone
5-Amino-2-chlorobenzoic acid
1-Amino-2-chloro-4-hydroxyanthraquinone
3-Amino-5-chloro-2-hydroxybenzenesulfonic acid
2-Amino-p-cresol
1-Amino-2,4-dibromoanthraquinone
1-Amino-2,4-dichloroanthraquinone
5-Amino-4,5'dihydroxy-3,4'-[(2-methoxy-5-methyl-p-phenylene) bis (azo)]-di-2,7-naphthalenedisulfonic acid, 5'-benzenesulfonate
2-Amino-4-(a,a-dimethylbenzyl) phenol
5-Amino-4-hydroxy-m-benzenedisulfonic acid
1-Amino-4-hydroxy-2-methoxyanthraquinone
4-Amino-5-hydroxy-2,7-naphthalenedisulfonic acid, benzenesulfonate
4-Amino-3-hydroxy-1-naphthalenesulfonic acid
6-Amino-4-hydroxy-2-naphthalenesulfonic acid, sodium salt
7-Amino-4-hydroxy-2-naphthalenesulfonic acid, sodium salt
2-(2-Amino-5-hydroxy-7-sulfo-1-naphthylazo)-5-nitrobenzoic acid
1-(6-Amino-1-hydroxy-3-sulfo-2-naphthylazo)-6-nitro-2-naphthol-4-sulfonic acid
5-Amino-6-methoxy-2-naphthalenesulfonic acid
m-(4-Amino-3-methoxyphenylazo) benzenesulfonic acid
4-[(4-Amino-5-methoxy-o-tolyl) azo]-4-hydroxy-2,7-naphthalenedisulfonic acid, benzenesulfonate

TABLE D-54. (Continued)

3-[)4-Amino-5-methoxy-o-tolyl) azo]-1,5-naphthalenedisulfonic acid
7-[(4-Amino-5-methoxy-o-tolyl) azo]-1,3-naphthalenedisulfonic acid
4-Amino-4'-(3-methyl-5-oxo-2-pyrazolin-lyl) 2,2'-stilbenedisulfonic acid
2-Amino-4-(methylsulfonyl) phenol
3-Amino-1,5-naphthalenedisulfonic acid
3-Amino-2,7-naphthalenedisulfonic acid
6-Amino-1,3-naphthalenedisulfonic acid
7-Amino-1,3-naphthalenedisulfonic acid
5-Amino-2-naphthalenesulfonic acid
5 (and 8)-Amino-2-naphthalenesulfonic acid
6-Amino-2-naphthalenesulfonic acid
8-Amino-1-naphthalenesulfonic acid
8-Amino-2-naphthol
2-Amino-5-nitrobenzenesulfonic acid
2-Amino-4-nitrophenol
4-Amino-4'-nitro-2,2'-stilbenedisulfonic acid
o-Aminophenol
m-[(p-Aminophenyl) azo] benzenesulfonic acid
p-[(p-Aminophenyl) azo] benzenesulfonic acid
7-(4-Aminophenylazo)-1,3-naphthalenedisulfonic acid
5-(p-Aminophenylazo) salicylic acid
2-(p-Aminophenyl)-6-methyl-7-benzothiazolesulfonic acid and salt
5-Amino-o-toluenesulfonic acid
5-Amino-2-(p-toluidino) benzenesulfonic acid
m-(4-Amino-3-tolylazo) benzenesulfonic acid
3-(4-Amino-o-tolylazo)-1,5-naphthalenedisulfonic acid
7-(4-Amino-o-tolyazo)-1,3-naphthalenedisulfonic acid
7-Anilino-4-hydroxy-2-naphthalenesulfonic acid
Anilinomethanesulfonic acid
Anilinomethanesulfonic acid, sodium salt
o-Anisidinomethanesulfonic acid
2-(o-Anisidino)-5-nitrobenzenesulfonic acid
Anthraflavic acid
Anthra [1,9-cd] pyrazol-6 (2H)-one
Anthraquinone
N,N'-(1,5-Anthraquinonylene) dianthranilic acid
Anthrarufin
4',4'''-Azobis (4-biphenylcarboxylic acid)
1-Benzamido-5-chloroanthraquinone
4-Benzamido-5-hydroxy-2,7-naphthalenedisulfonic acid
7-Benzamido-4-hydroxy-2-naphthalenesulfonic acid
7H-Benz (de) anthracen-7-one
3,3'-Bianthra (1,9-cd) pyrazole-6'(2H,2'H)-dione
1,4-Bis-(1-anthraquinonylamino) anthraquinone
Bis (chlorosulfonyl) phthalocyaninedisulfonic acid, copper derivative
4,4-Bis (diethylamino) benzhydrol salt, 2,7-naphthalenedisulfonic acid mixture
4-Bis ([p-diethylaminophenyl] methyl)-2,7-naphthalenedisulfonic acid, leuco form
4,4'-Bis (p-hydroxyphenylazo)-2,2'-stilbene-disulfonic acid
3-Bromo-7H-benz (de) anthracen-7-one

TABLE D-54 (Continued)

2-Bromo-4,6-dinitroaniline
Carbazole violet
N-[(3-Carboxy-4-chlorophenyl)-sulfonyl] anthranilic acid
1-Chloroanthraquinone
2-Chloroanthraquinone
Chloro-7H-benz (de) anthracen-7-one
1-Chlorobenzene-4-methylsulfone
p-Chlorobenzenesulfinic acid
3-Chloro-4,6-dinitrobenzenesulfonic acid
1-Chloro-2-methylanthraquinone
4-Chloro-N-methyl-3-nitrobenzenesulfonamide
4-Chloro-3-(methylsulfonyl) nitrobenzene
1-Chloro-5-nitroanthraquinone
2-Chloro-5-nitrobenzenesulfinic acid
4-Chloro-3-nitrobenzenesulfonamide
4-Chloro-3-nitrobenzenesulfonanilide
2-Chloro-5-nitrobenzenesulfonic acid
4-Chloro-3-nitrobenzenesulfonic acid
2-Chloro-5-nitrobenzoic acid
4-Chloro-3-nitrophenyl methyl sulfone
1-(p-Chlorophenyl)-3-methyl-2-pyrazolinc-5-one
2-Chloro-5-sulfamoylbenzoic acid
1-(6-Chloro-o-tolyl)-3-methyl-2-pyrazolin-5-one
Chrysazin
3'-[Di (2-acetoxyethyl) amino]-p-acetophenetidide
1,4-Diaminoanthraquinone
1,5-Diaminoanthraquinone
1,5 (and 1,8)-Diaminoanthraquinone
2,6-Diaminoanthraquinone
3,4-Diaminobenzanilide
2,4-Diaminobenzenesulfonic acid
2,5-Diaminobenzenesulfonic acid
4,8-Diamino-9,10-dihydro-1,5-dihydroxy-9,10-dioxo-2,6-anthracenedisulfonic acid
4,4'-Diamino-2,2'-stilbenedisulfonic acid
1,5-Dibenzamidoanthraquinone
4,5'-Dibenzamido-1, 1'-iminodianthraquinone
Dibenzo[b,def] chrysene-7,14-dione
1,5-Dibenzoylnaphthalene
3,9-Dibromo-7H-benz(de) anthracen-7-one
1,5-Dichloroanthraquinone
1,8-Dichloroanthraquinone
2,5-Dichloro-4-(3-methyl-5-oxo-2-pyrazolin-1-yl) benzenesulfonic acid
2,5-Dichloro-4-sulfobenzenediazonium sulfate
3-[(p-Diethylamino) phenylazo]-1H-1,2,4-triazole
6,15-Dihydro-5,9,14,18-anthrazinetetrone
9,10-Dihydro-9,10-dioxo-1,5-anthracenedisulfonic acid
9,10-Dihydro-9,10-dioxo-1,5-anthracenedisulfonic acid, disodium salt
9,10-Dihydro-9,10-dioxo-1,5 (and 1,8)-anthracene-disulfonic acid
9,10-Dihydro-9,10-dioxo-1,5(and 1,8)-anthracene-disulfonic acid, sodium salt

TABLE D-54. (Continued)

9,10-Dihydro-9,10-dioxo-1,8-anthracenedisulfonic acid, potassium salt
9,10-Dihydro-9,10-dioxo-2,6-anthracenedisulfonic acid
9,10-Dihydro-9,10-dioxo-2,6-anthracenedisulfonic acid, sodium salt
9,10-Dihydro-9,10-dioxo-1-anthracenesulfonic acid
9,10-Dihydro-9,10-dioxo-1-anthracenesulfonic acid, sodium salt
9,10-Dihydro-5-nitro-9,10-dioxo-1-anthracenesulfonic acid
9,10-Dihydro-1-nitro-9,10-dioxo-2-anthroic acid
1,5 (and 1,8)-Dihydroxyanthraquinone
1,5-Dihydroxy-4,8-dinitroanthraquinone
1,8-Dihydroxy-4,5-dinitroanthraquinone
1,5 (and 1,8)-Dimethoxyanthraquinone
4-(α,α-Dimethylbenzyl)-2-phenylazophenol
2,2'-Dimethyl-1,1'-bianthraquinone
1,5 (and 1,8)-Dinitroanthraquinone
N,N'-(2,4-Dinitro-1,5-anthraquinonylene) dioxamic acid
3',4-Dinitrobenzanilide
2,4-Dinitrobenzenesulfonic acid
3',5'-Dinitro-2'-hydroxyacetanilide
1-(3,5-Dinitro-2-hydroxphenylazo)-2-naphthol
4,4'-Dinitrostilbene-2,2'-disulfonic acid
1,4-Di-p-toluidinoanthraquinone
Dyes
  Acid dyes
  Basic dyes
  Direct dyes
  Disperse dyes
  Fiber-reactive dyes
  Florescent brightening agents
  Mordant dyes
  [Phthalocyaninato (2-)] copper
  Solvent dyes
  Toners and lakes
  Vat dyes
α-(N-Ethylanilino)-p-toluenesulfonic acid
2-(N-Ethyl-p-[(6-methoxy-2-benzo-thiazolyl)azo] anilino) ethanol
1-(o-Ethylphenyl)-3-methyl-2-pyrazolin-5-one
Hydrochloric acid
6'-Hydroxy-m-acetotoluidide
N-(7-Hydroxy-8-[2-hydroxy-5-(methylsulfamoylphenyl) azo]-1-naphthyl) acetamide
6'-Hydroxy-5'-[2-hydroxy-5-nitrophenyl) azo]-m-acetotoluidide
N-[7-Hydroxy-8-([2-hydroxy-5-nitrophenyl] azo)-1-naphthyl] acetamide
7-Hydroxy-8-[(4'-[(p-hydroxyphenyl) azo]-4-biphenylyl) azo]-1,3-naphthalenedisulfonic acid
7-Hydroxy-8-[(4'-[(p-hydroxyphenyl) azo]-3,3'-dimethyl-4-biphenylyl)azo]-1,3-naphthalenedisulfonic acid
4-Hydroxymetanilamide
4-Hydroxymetanilic acid
3-Hydroxy-2-methylcinchoninic acid
4-Hydroxy-N'-methylmetanilamide
7-Hydroxy-1,3-naphthalenedisulfonic acid
3-Hydroxy-2,7-naphthalenedisulfonic acid, disodium salt

TABLE D-54. (Continued)

5-Hydroxy-1-naphthalenesulfonic acid
6-Hydroxy-2-naphthalenesulfonic acid, sodium salt
N-(7-Hydroxy-1-naphthyl) acetamide
1-(2-Hydroxy-1-naphthylazo)-6-nitro-2-naphthol-4-sulfonic acid
2-Hydroxy-5-nitrometanilic acid
1-(2-Hydroxy-4-nitrophenylazo)-2-naphthol
3-[4-(4'-Hydroxyphenylazo)-2,5-dimethoxyphenylazo] benezenesulfonic acid
α,α'-([α-Hydroxy-p-sulfobenzylidene] bis [(3-methyl-p-phenylene) (ethylimino)]) di-m-toluenesulfonic acid
1,1'-Iminobis (4-aminoanthraquinone)
1,1'-Iminobis (5-benzamidoanthraquinone)
7,7'-Iminobis (4-hydroxy-2-naphthalenesulfonic acid)
1,1'-Iminobis-4-nitroanthraquinone
1,1'-Iminodianthraquinone
Isoviolanthrone
Leuco-1,4-diaminoanthraquinone
Leuco quinizarin
Leuco tetrahydroxyanthraquinone
Metanilic acid
4,4'-Methylenebis (N,N-diethylaniline)
m-(3-Methyl-5-oxo-2-pyrazolin-1-yl) benzenesulfonic acid
p-(3-Methyl-5-oxo-2-pyrazolin-1-yl) benzenesulfonic acid
4-(3-Methyl-5-oxo-2-pyrazolin-1-yl)-m-toluenesulfonic acid
1-Naphthalenesulfonic acid
1-Naphthalenesulfonic acid, sodium salt
1,4,5,8-Naphthalenetetracarboxylic acid
Naphth (1,2-d) (1,2,3) oxadiazole-5-sulfonic acid
3'-Nitroacetanilide
4'-Nitroacetanilide
5-Nitroanthranilic acid
m-Nitrobenezenesulfonic acid
4'-Nitro-4-biphenylcarboxylic acid
3-Nitro-1,5-naphthalenedisulfonic acid
7-(and 8)-Nitronaphth (1,2-d) (1,2,3) oxadiazole-5- sulfonic acid
2-(4-Nitrophenyl)-(2H)-naphtho (1,2-d) triazole-6,8-disulfonic acid
4-Nitro-4'-[5-sulfo-2H-naphthol (1,2-d) triazol-2-yl]-2,2'-stilbenedisulfonic acid
3-Nitro-p-toluenesulfonic acid
5-Nitro-o-toluenesulfonic acid
5-Nitro-2-p-toluidinobenzenesulfonic acid
Oxalacetic acid, diethyl ester, (p-sulfophenyl)hydrazone
5-Oxo-1-(3-Aminophenyl)-2-pyrazoline-3-carboxylic acid
1-[(7-Oxo-7H-benz [de] anthracen-3-yl) amino] anthraquinone
1,1'-[(7-Oxo-7H-benz [de] anthracen-3,9-ylene) diimino] dianthraquinone
Phthalocyaninetetrasulfonyl chloride, copper derivative
Pyranthrone
Quinizarin
Salicylic acid, ammonium chromium complex
Salycylic acid, sodium chromium complex
5-Sulfamoylanthranilic acid
4-Sulfoanthranilic acid
α,α-[(p-Sulfobenzylidene) bis [(3-methyl-p-phenylene) (Ethylimino)]] di-m-toluenesulfonic acid
N,5'-Sulfonyldianthranilic acid

TABLE D-54. (Continued)

Tetrabromo-8,16-pyranthrenedione
3,3'-Thiobis [7H-benz (de) anthracen-7-one]
Toluene-2,4-diamine
o-Toluidinomethanesulfonic acid
7,7'-Ureylenebis (4-hydroxy-2-naphthalenesulfonic acid)
2,2'-Vinylenebis (benzimidazole)
Violanthrone
Products N.E.C.
  2-Chloro-5-nitrobenzenesulfonyl chloride
  4-Hydroxyacetanilide
  N-(4-Hydroxymetanilyl) anthranilic acid
  N-(7-Hydroxy-1-naphthyl) benzamide
  3'-([7-Hydroxy-1-naphthyl]carbamoyl) acetanilide
3-(3-Methyl-5-oxo-2pyrazolin-1-yl)-1,5- naphthalenedisulfonic acid
2-(Methylsulfonyl)-4-nitroaniline
1,5-Naphthalenedisulfonic acid
2,7-Naphthalenedisulfonic acid

TABLE D-55. PAUL UHLICH & COMPANY, INCORPORATED

90 West Street
New York, New York 10006

Hastings-on-Hudson, New York 10706

Dyes
  Toners and lakes

TABLE D-56. UNITED MERCHANTS & MANUFACTURERS, INC.

1407 Broadway
New York, New York 10018

Roma Chemical - Color Division
749 Quequechan
Fall River, Massachusetts 02723

Dyes
  Toners and Lakes
General and Compounded Products
  Pigment dispersions
  Pigment press cakes
  Textile printing inks

TABLE D-57. WARNER-JENKINSON COMPANY

(Formerly known as Warner-Jenkinson
Manufacturing Company)
2526 Baldwin Street
St. Louis, Missouri 63106

Dyes
  Food, drug and costmetic colors
α-(N-Ethylanilino)-p-toluenesulfonic acid
p-Hydrazinobenzenesulfonic acid
3-Hydroxy-2,7-naphthalenedisulfonic acid, disodium salt
6-Hydroxy-2-naphthalenesulfonic acid, sodium salt

TABLE D-58. THE J.S. YOUNG COMPANY

2731 Boston Street
Baltimore, Maryland 21224

Young Aniline Works, Inc., subsidiary
Balitmore Maryland 21224

Dyes
- Acid dyes
- Direct dyes
- Mordant dyes

APPENDIX E

LOCATIONS OF DYE AND PIGMENT MANUFACTURING PLANTS LISTED BY REGION

TABLE E-1

LOCATIONS OF DYE AND PIGMENT MANUFACTURING PLANTS

New Jersey (30 plants)

1. Alliance Chemical Company
   Newark, New Jersey 07105

*2. Allied Chemical Corporation
   Specialty Chemicals Division
   Haledon, New Jersey

*3. American Color and Chemical Corporation
   Paterson, New Jersey

*4. American Cyanamid Company
   Organic Chemicals Division
   Bound Brook, New Jersey

5. Atlantic Chemical Industries, Inc.
   Atlantic Chemical Corporation, subsidiary
   Nutley, New Jersey

6. BASF Wyandotte Corporation
   Colors and Chemicals Group
   Kearny, New Jersey

*7. E.I. duPont deNemours & Company, Inc.
   Organic Chemicals Department
   Dyes and Chemical Division
   Deepwater, New Jersey and Newark, New Jersey

8. Dye Specialties, Inc.
   Jersey City, New Jersey

9. Fabricolor Inc.
   Paterson, New Jersey

*10. Foster-Heaton Company
   Paterson, New Jersey

11. GAF Corporation
   Chemical Division
   Paterson, New Jersey and Linden, New Jersey

12. Indol Chemical Company, Inc.
   Carterest, New Jersey

13. Inmont Corporation
   Hawthorne, New Jersey

14. H. Kohnstamm and Company, Inc.
   Pigments Division
   Camden, New Jersey

---

* Plants belonging to companies considered to be among the seven leading manufacturers.

14. Magruder Color Company, Inc.
    Newark, New Jersey

15. Max Marx Color and Chemical Company
    Irvington, New Jersey

16. Otto B. May, Inc.
    Newark, New Jersey

17. Mobay Chemical Corporation
    Verona Division
    Bayonne, New Jersey (2 plants)

18. Morton-Norwich Products, Inc.
    Morton Chemical Company, division
    Paterson, New Jersey

19. Passaic Color and Chemical Company
    Paterson, New Jersey

20. Pfister Chemical Inc.
    Ridgefield, New Jersey

21. Sandoz-Wander, Inc.
    Color and Chemicals Division
    Fair Lawn, New Jersey
    East Hanover, New Jersey
    Paterson, New Jersey

22. Sterling Drug Inc.
    Thomasset Colors Division
    Newark, New Jersey

23. Sun Chemical Corporation
    Pigments Division East
    Newark, New Jersey

*24. Toms River Chemical Corporation
    Toms River, New Jersey

---

* Plants belonging to companies considered to be among the seven leading manufacturers.

Ohio-West Virginia-Kentucky (11 plants)

*1. American Cyanamid Company
Organic Chemicals Division
Marietta, Ohio
Willow Island, West Virginia

2. Borden, Inc.
Borden Chemical Division
Graphic Arts Products Division
Cincinnati, Ohio

3. Chemetron Corporation
Chemicals Group
Pigments Division
Huntington, West Virginia

4. Cincinnati Milacron, Inc.
Cincinnati Milacron Chemicals Inc., subsidiary
Cincinnati, Ohio

5. Day-Glo Color Corporation
Cleveland, Ohio

*6. GAF Corporation
Chemical Division
Calvert City, Kentucky

7. Kewanee Oil Company
Harshaw Chemical Company, division
Pigment and Ceramic Department
Louisville, Kentucky

8. The Sherwin-Williams Company
Sherwin-Williams Chemicals Division
St. Bernard, Ohio

9. Sterling Drug Inc.
The Hilton-Davis Chemical Company, division
Cincinnati, Ohio

10. Sun Chemical Corporation
Pigments Division West
Cincinnati, Ohio

---

* Plants belonging to companies considered to be among the seven leading manufacturers.

North Carolina - South Carolina (9 plants)

*1. American Color and Chemical Corporation
Beaufort, South Carolina

2. BASF Wyandotte Corporation
Colors and Chemicals Group
Charlotte, North Carolina

3. Ciba-Geigy Corporation
Dyestuff and Chemicals Division
Greensboro, North Carolina

4. Kewanee Oil Company
Harshaw Chemical Company Division
Textile Color Department
Lowell, North Carolina

5. Martin-Marietta Corporation
Martin Marietta Chemicals
Sodyeco Division
Sodyeco, North Carolina

6. Mobay Chemical Corporation
Verona Division
Charleston, South Carolina

7. Pfister Chemical Inc.
Charlotte, North Carolina

8. Sow-Tex Chemical Company, Inc.
Mount Holly, North Carolina

9. Synalloy Corporation
Blackman Uhler Chemical Division
Spartanburg, South Carolina

* Plants belonging to companies considered to be among the seven leading manufacturers.

Massachusetts-Rhode Island (8 plants)

1. American Hoechst Corporation
   Dyes and Pigments Division
   Coventry, Rhode Island

2. Benzenoid Organics, Inc.
   Bellingham, Washington

3. Childs Pulp Colors, Inc.
   Springfield, Massachusetts

4. Philip A. Hunt Chemical Corporation
   Wayland Chemical Division
   Lincoln, Rhode Island
     Industrial Dyestuff Co., subsidiary
   East Providence, Rhode Island

*5. ICI United States Inc.
   Dyes and Textiles Chemicals Division
   Dighton, Massachusetts

6. Nyanza Inc.
   Ashland, Massachusetts

7. United Merchants and Manufacturers, Inc.
   Roma Chemical - Color Division
   Fall River, Massachusetts

---

* Plants belonging to companies considered to be among the seven leading manufacturers.

New York (7 plants)

*1. Allied Chemical Corporation
Specialty Chemicals Division
Buffalo, New York

2. Berncolors-Poughkeepsie, Inc.
Poughkeepsie, New York

*3. GAF Corporation
Chemical Division
Rensselaer, New York

4. Hercules Inc.
Coatings and Specialty Products Department
Glens Falls, New York

5. H. Kohnstamm and Company, Inc.
Pigments Division
Brooklyn, New York

6. Sun Chemical Corporation
Chemicals Group
Pigments Division East
Rosebank, New York

7. Paul Uhlich and Company, Inc.
Hastings-on-Hudson, New York

* Plants belonging to companies considered to be among the seven leading manufacturers.

Pennsylvania (7 plants)

*1. American Color and Chemical Corporation
Lock Haven, Pennsylvania
Reading, Pennsylvania

2. Crompton and Knowles Corporation
Chemicals Group
Gibraltar, Pennsylvania
Reading, Pennsylvania

3. Keystone Color Works, Inc.
York, Pennsylvania

4. C. Lever Company, Inc.
Cornwells Heights, Pennsylvania

5. Ridgway Color and Chemical
Ridgway, Pennsylvania

Illinois (4 plants

1. Apollo Colors Inc.
Northbrook, Illinois

2. Industrial Color Inc.
Joliet, Illinois

3. The Sherwin-Williams Company
Sherwin-Williams Chemicals Division
Chicago, Illinois

4. Stange Company
Chicago, Illinois

California (3 plants)

1. Day-Glo Color Corporation
South El Monte, California

2. Medical Chemical Corporation
Santa Monica, California

3. Tenneco Inc.
Cal/Ink Division
San Francisco, California

* Plants belonging to companies considered to be among the seven leading manufacturers.

Miscellaneous Locations (8 plants)

1. Ciba-Geigy Corporation
   Industrial Chemicals Division
   McIntosh, Alabama

2. The J. S. Young Company
   Young's Aniline Works, Inc., subsidiary
   Baltimore, Maryland

3. Chemetron Corporation
   Chemicals Group
   Pigments Division
   Holland, Michigan

4. Warner-Jenkinson Company
   St. Louis, Missouri

*5. E.I. duPont deNemours & Company, Inc.
   Organic Chemicals Department
   Dyes and Chemical Division
   Manati, Puerto Rico

6. Eastman Kodak Company
   Eastman Chemical Products, Inc., subsidiary
   Tennessee Eastman Company, division
   Kingsport, Tennessee

7. American Cyanamid Company
   Organic Chemicals Division
   Damascus, Virginia

8. PPG Industries, Inc.
   unknown location

* Plants belonging to companies considered to be among the seven leading manufacturers.

TECHNICAL REPORT DATA
(Please read Instructions on the reverse before completing)

1. REPORT NO EPA-600/2-77-023g	2.	3. RECIPIENT'S ACCESSION NO.
4. TITLE AND SUBTITLE Industrial Process Profiles for Environmental Use: Chapter 7. Organic Dyes and Pigments Industry		5. REPORT DATE February 1977 6. PERFORMING ORGANIZATION CODE
7. AUTHOR(S) Thomas R. Steadman and Eleanor W. Helper (Battelle-Col.) T. Parsons, G.E. Wilkins, and N.P. Phillips		8. PERFORMING ORGANIZATION REPORT NO.
9. PERFORMING ORGANIZATION NAME AND ADDRESS Radian Corporation 8500 Shoal Creek Boulevard P.O. Box 9948 Austin, Texas 78766		10. PROGRAM ELEMENT NO. 1AB015 11. CONTRACT/GRANT NO. 68-02-1319/Task 34
12. SPONSORING AGENCY NAME AND ADDRESS Industrial Environmental Research Laboratory Office of Research and Development U.S. ENVIRONMENTAL PROTECTION AGENCY Cincinnati, Ohio 45268		13. TYPE OF REPORT AND PERIOD COVERED Initial: 8/75-11/76 14. SPONSORING AGENCY CODE EPA/600/12

15. SUPPLEMENTARY NOTES

16. ABSTRACT

The catalog of Industrial Process Profiles for Environmental Use was developed as an aid in defining the environmental impacts of industrial activity in the United States. Entries for each industry are in consistent format and form separate chapters of the study. The organic dyes and pigments industry is engaged in the conversion of purchased organic chemicals, usually cyclid benzenoids, into more complex intermediates and ultimately into dyes and pigments. Forty-two chemical trees, thirty-four process flow sheets, and forty-eight process descriptions have been prepared to characterize the industry. Within each process description available data have been presented on input materials, operating parameters, utility requirements, and waste streams. Data related to the subject matter, including company, product, and raw material data, are included as appendices.

17. KEY WORDS AND DOCUMENT ANALYSIS

a. DESCRIPTORS	b. IDENTIFIERS/OPEN ENDED TERMS	c. COSATI Field/Group
Pollution Organic Dyes Pigments Cyclic Benzenoids Dyes Organic Pigments Process Description	Process Assessment Air Pollution Control Water Pollution Control Solid Waste Control Stationary Sources Organic Chemical Industry Synthetic Dyes Synthetic Pigments	07C 11C 13B

18. DISTRIBUTION STATEMENT Release to the public	19. SECURITY CLASS (This Report) Unclassified 20. SECURITY CLASS (This page) Unclassified	21. NO. OF PAGES 362 22. PRICE

EPA Form 2220-1 (9-73)