EPA-600/2-77-077
April 1977

Environmental Protection Technology Series

DESIGN, DEVELOPMENT, AND DEMONSTRATION OF A FINE PARTICULATE MEASURING DEVICE

Industrial Environmental Research Laboratory
Office of Research and Development
U.S. Environmental Protection Agency
Research Triangle Park, North Carolina 27711

RESEARCH REPORTING SERIES

Research reports of the Office of Research and Development, U.S. Environmental Protection Agency, have been grouped into five series. These five broad categories were established to facilitate further development and application of environmental technology. Elimination of traditional grouping was consciously planned to foster technology transfer and a maximum interface in related fields. The five series are:

1. Environmental Health Effects Research
2. Environmental Protection Technology
3. Ecological Research
4. Environmental Monitoring
5. Socioeconomic Environmental Studies

This report has been assigned to the ENVIRONMENTAL PROTECTION TECHNOLOGY series. This series describes research performed to develop and demonstrate instrumentation, equipment, and methodology to repair or prevent environmental degradation from point and non-point sources of pollution. This work provides the new or improved technology required for the control and treatment of pollution sources to meet environmental quality standards.

EPA REVIEW NOTICE

This report has been reviewed by the U.S. Environmental Protection Agency, and approved for publication. Approval does not signify that the contents necessarily reflect the views and policy of the Agency, nor does mention of trade names or commercial products constitute endorsement or recommendation for use.

This document is available to the public through the National Technical Information Service, Springfield, Virginia 22161.

EPA-600/2-77-077
April 1977

DESIGN, DEVELOPMENT, AND DEMONSTRATION OF A FINE PARTICULATE MEASURING DEVICE

by

Pedro Lilienfeld, Daniel P. Anderson,
and Douglas W. Cooper

GCA/Technology Division
Burlington Road
Bedford, Massachusetts 01730

Contract No. 68-02-1341
ROAP No. 21ADL-018
Program Element No. 1AB012

EPA Project Officer: William B. Kuykendal

Industrial Environmental Research Laboratory
Office of Energy, Minerals, and Industry
Research Triangle Park, N.C. 27711

Prepared for

U.S. ENVIRONMENTAL PROTECTION AGENCY
Office of Research and Development
Washington, D.C. 20460

ABSTRACT

This report presents the design, development, and testing of a fine particulate source monitoring instrument for the real-time measurement of the mass concentration as a function of aerodynamic particle size. This report also includes a literature review and selection of the operating principle on which the instrument is based.

The device described in this report size-segregates the particulates by means of inertial jet-to-plate impaction on a continuously moving substrate and determines the collected mass by the method of beta radiation attenuation.

The collection-detection system consists of a seven-impaction stage cascaded configuration for direct insertion into a stack, with beta mass sensing at each collection stage. Although the initial objective of this program was to develop an instrument compatible with operation in a stack environment at temperatures up to 260°C (500°F), this objective could not be met as it was determined that the beta detectors failed to operate satisfactorily when exposed to such temperatures.

The instrument was nevertheless completed and tested at room temperature conditions within a test tunnel with satisfactory results.

This report was submitted in fulfillment of Project No. 1-359, Contract No. 68-02-1314 by the GCA/Technology Division under the sponsorship of the Environmental Protection Agency. Work was completed as of 31 August 1975.

CONTENTS

No.		Page
Abstract		iii
List of Figures		vi
List of Tables		viii
Acknowledgments		ix
Sections		
I	Introduction	1
II	Conclusions	4
III	Recommendations	6
IV	Literature Review	7
V	Instrument Development	67
VI	Instrument Testing	98
VII	References	114

FIGURES

No.		Page
1	The Size of Airborne Contaminants (Mine Safety Appliances Company)	16
2	Product of Light-Scattering Cross-Section and Measured Concentration for Atmospheric Aerosol. From Pueschel and Noll (1967). Visibility Inversely Proportional to b.	18
3	"Respirable" Dust Mass Measurement Sampling Criteria (Lippman, 1970)	19
4	Generalized Aerosol Assessment System Schematic	23
5	Three Types of Aerosol Assessment Systems in General Use	34
6	Generalized Elutriator/Centrifugator	43
7	Circular Nozzle Impaction Efficiency as a Function of ψ. (Mitchell and Pilcher, 1959)	48
8	Particle Cut-Off Diameter for a Circular Nozzle as a Function of Jet Diameter	50
9	Assembled Seven-Stage Collector-Sensor	71
10	Single Modular Impaction-Cassette Assembly	72
11	Cassette, Impaction Nozzle and Collector Inlet Sections	73
12	Substrate Drive and 90° Rotation Mechanisms	75
13	Experimental Quench Circuit (First Version)	86
14	Simplified Quenching Circuit	88
15	Log Computation Module	92

FIGURES (continued)

No.		Page
16	Strip Chart Recording of Dust Collection Run With Test "Breadboard"	93
17	Front View of Control Console	97
18	Comparison of GCA In-Stack Beta Impactor Data With Corresponding Brink Curve (Concentration = 0.267 g/m^3)	110
19	Comparison of GCA In-Stack Beta Impactor Data With Corresponding Brink Curve (Concentration = 0.955 g/m^3)	111
20	Relative Centerline Concentration Versus Distance Downstream From Obstruction in EPA Test Tunnel (Data Points From Figure 2 of Reference 99)	112

TABLES

No.		Page
1	Books Concerning the Behavior of Aerosols and Their Analysis	9
2	Periodicals Containing Articles Concerning the Behavior of Aerosols and Their Analysis	12
3	Efficiency of Dust-Arresting Equipment for Various Sizes of Dust (Ball and Griffiths, 1970)	20
4	Summary of Types of Size-Analysis Techniques	29
5	Recently Developed Particle Sizing Techniques	32
6	Various Parameters of Aerosol Concentration and Techniques by Which They May Be Determined	36
7	Sensor Principles Affected by Particle Properties (Dorsey and Burckle, 1971)	38
8	Methods of Particle Size Discrimination	39
9	Comparison of Mass Sensing Techniques	52
10	Z/M Ratios of Selected Elements and Compounds Typical of Particulate Emissions from Coal-Fired Steam Power Plants	61
11a	Design Sheet for Industrial and Commercial Facilities	99
11b	Design Sheet for Industrial and Commercial Facilities	101
11c	Design Sheet for Industrial and Commercial Facilities	103

ACKNOWLEDGMENTS

The useful contributions of James Congdon and numerous other members of the GCA/Technology Division staff are gratefully acknowledged. The cooperation and assistance provided by Mr. Charles Gooding and other RTI personnel, as well as by Mr. Bill Kuykendal of the EPA Industrial Environmental Research Laboratory are acknowledged with gratitude.

SECTION I

INTRODUCTION

The objective of this program was the development of a fine particulate mass sizing sampler designed to measure the mass concentration of particulates as a function of size, upstream and downstream of control devices in coal-fired steam power plants.

Mass-size monitoring of particulates contained in stack gases is a challenging problem for the instrumentation scientist. In-stack sampling and sizing of particulates has, in general, been performed by extracting a sample, under manually adjusted isokinetic flow conditions, and collecting the particles by filtration or by impaction. The collected material is then evaluated gravimetrically; i.e., by weighing before and after collection. The average mass concentration as a function of size is then calculated on the basis of the total volume of air sampled during the collection period. This method is tedious, inefficient and incompatible with the continuous recording, automatic data transmission and processing that are required to handle the increasing volume of information resulting from intensive air pollution monitoring programs. Furthermore, these manual methods do not provide real-time information, nor the temporal resolution required to determine emission variability both from the point of view of total mass emission as well as size distribution.

Until recently the only methods available for recording-type particulate monitoring were based on such indirect sensing principles as measuring certain parameters related to either particle area or particle

number concentration. These techniques are applicable to mass measurements only when particle density is known. In addition, if light scattering or absorption are used, variations in particle size, shape, and index of refraction, such as are found in the stack environment, can introduce serious measurement errors. A recently developed technique, based on piezoelectric mass detection, utilizes either electrostatic precipitation or inertial impaction to deposit particulates on a quartz crystal whose oscillation frequency is a function of the collected mass. Operational difficulties, and the basic incompatibility of this technique with prolonged unattended operation, have restricted its use to certain laboratory applications.

The preferred solution to the problem of automated mass measurement of particulates from stack gases is based on beta radiation absorption sensing of the material collected on a suitable substrate. This technique was recommended as a result of a review program undertaken for the Environmental Protection Agency.[1] This recommendation has been confirmed and supported independently by the experience acquired by the recent application of beta absorption to a variety of particulate air pollution sensing instruments and the experimental use of such instrumentation under laboratory and field conditions.

The basic instrumental technique of the stack-gas particulate mass-sizing recording monitor is based on the principle of combined inertial impaction-beta attenuation mass sensing. Aerosol mass monitoring by beta-radiation absorption has been used before by various workers in the field of air pollution and industrial hygiene.[2-12] These investigators applied beta attenuation to the measurement of particulate matter suspended in a column of air, collected on filter media, or on a metallized foil strip by electro-precipitation. Direct measurement of aerosols by attenuation of betas by particles suspended in a column of air has proven to be impractical, except for extremely high concentrations (greater than 50 g/m^3), due to the overwhelming predominance of the

beta-attenuation due to the air molecules, and the effect of air density fluctuations associated with in-stack temperature and pressure variations. The filter collection/beta-absorption approach has been applied to a number of instruments for the automated measurement and recording of aerosol mass concentration,[8] in ambient environments.

The instrument described in this report is based on particulate size separation and measurement by means of a multiple-stage cascade impaction configuration with a continuously advancing substrate, combined with beta attenuation sensing at each stage. This collection-sensing head was designed for direct in-stack operation, rather than the usual sample extraction approach. This program represents a further application of the beta absorption concept in the direction of an instrument specifically designed for in-stack measurements of the size distribution of particulates by mass to be used for the quantitative evaluation of the performance of control methods for power plant particulate emissions.

SECTION II

CONCLUSIONS

The development of a recording particulate mass-sizing instrument for in-stack particulate measurements required a very substantial effort whose difficulties exceeded original estimates. The principal problem encountered during the execution of this program was associated with the failure of the present state-of-the-art technology of beta radiation detectors capable of operating at temperatures of the order of $200^{\circ}C$ or above. Several promising avenues of solution of this problem were explored but were not carried to fruition as the required efforts exceeded the scope and intent of this program.

The feasibility of the concept of multiple cascaded impaction stages with continuously advancing collection substrates combined with beta radiation mass sensing at each stage, with near real-time readout of a signal proportional to fractional stage mass concentration was demonstrated. The principal objection to this general approach, without consideration of the problem of high temperature beta detection, resides in the intrinsic complexity of the resulting system which could probably be simplified only to a relatively minor degree. This approach should thus be considered as a useful research tool but its full application must be contingent on the development and future availability of beta detectors compatible with the above-mentioned temperatures.

The results of the test series performed at the EPA facilities with the system at room temperature were quite encouraging considering that no

prior optimization testing had been performed and the operational idiosyncracies of this rather complex measurement system were largely unknown before these tests.

SECTION III

RECOMMENDATIONS

Although the feasibility of the technique of cascaded collection on moving impaction substrates has been proven within this program, it is felt that the complexity of the mechanical and electronic systems is somewhat excessive to warrant the pursuit of this particular approach beyond the research prototype completed within this program.

The problem of high temperature beta detection warrants further efforts as a solution would provide an extremely useful tool for the mass measurement, sensing, and sizing of in-stack particulates using several alternative collection and sampling techniques. Two general approaches should be attacked: the development of an electro-chemically stable high temperature geiger detector, presumably to be operated with external quenching; i.e., electronic pulse quenching, circuitry for which has been developed within the performance of the program reported herein; and the development of a high temperature compatible scintillation detection-fiber optic beta detection scheme using a CaF_2 crystal as a scintillator, and quartz fiber optics to carry the light pulse signal to the exterior of the stack.

Two promising collection and sampling techniques should be explored contingent on the development of a high temperature-compatible beta detector: cascaded virtual impaction with fixed, discardable filters as developed under another EPA contract; and total mass concentration sensing by means of beta attenuation sensing through a small column of gas before and after a continuous flow miniature electrostatic precipitator.

SECTION IV

LITERATURE REVIEW

INTRODUCTION AND SUMMARY

The characterization of particulates suspended in stack gases has been receiving increasing attention as the need to establish more specific emission regulation standards has evolved, at the same time as a better quantitative assessment of the effectiveness of control methods and devices has become an imperative requirement.

In-stack sampling for particulate mass emission determinations has been, and continues to be performed in general by extracting a sample and collecting the particles externally to the stack by filtration. Gravimetric techniques are then used to evaluate the mass of collected material. Sizing of particulates is usually accomplished by means of selective inertial impaction, preferably within the stack itself to preserve the pristine size distribution of the aerosol to be assessed. A number of variations of these two basic techniques have evolved, but their intrinsic disadvantages of tediousness, lack of time resolution, and the requirements for laboratory facilities for analysis and/or weighing of the collected samples remains a common denominator limiting their use and applicability as well as the information detail resulting from such measurements.

The present document is an attempt to review the open literature pertinent to the problem of measuring particulates carried by stack effluents, with special emphasis on techniques and methods compatible with continuous or continual, automated operation and electrically recorded

information. This review is introduced by an overview of the literature sources available to perform such a review, both published books as well as scientific and technical journals. The next section of this document pertains to a selective summary of the general field of the present state of aerosol analysis technology, again with specific attention to automated methods and techniques compatible with the measurement of particulates in stack gases. The discussion then turns to the reasons why, and the methods with which particle aerodynamic diameter is measured. Techniques for the measurement of particle mass concentration and the basis for selecting mass as a primary parameter for the assessment of particulate emissions are treated. The document concludes with a brief review of the particular characteristics of and the problems associated with stack gas aerosol measurements.

The present document is not intended as an all-inclusive, totally exhaustive review of published literature on the subject but as a useful compilation of work performed, techniques assessed, and definitions reviewed in the context of stack gas particulate emission characterization. Furthermore, it is intended to serve as background source for the selection of techniques to be incorporated in the design of a fine-particulate measuring device, a development program within which the present document has been compiled.

LITERATURE ON AEROSOLS

An extensive literature has grown concerning the behavior and analysis of suspended particulates, as is indicated by the number of books listed in Table 1, derived from Books in Print and from previous literature reviews. Articles on aerosols appear in a wide variety of periodicals because aerosols play significant roles in diverse areas of concern, exhibiting behavior that requires the expertise of many disciplines to understand. A list of the periodicals in which work relating to aerosols appears is given in Table 2, a selection from those

Table 1. BOOKS CONCERNING THE BEHAVIOR OF AEROSOLS AND THEIR ANALYSIS

Allen, T. (1968): Particle Size Measurement, Chapman & Hall, London.

American Conference of Governmental Industrial Hygienists (1972): Air Sampling Instruments, 4th Ed.

Cadle, R. D. (1953): Particle Size Determination, Interscience, New York.

Dalla Valle, J. M. (1948): Micromeritics, 2nd Ed., Pitman Publ. Corp., New York.

Davies, C. N. (1967): Aerosol Science, Academic Press, New York.

Dennis, R., Ed. (in press): Handbook on Aerosols, U.S. Atomic Energy Commission, Monograph Series.

Englund, H. (1971): Proceedings of the Second International Clean Air Conference, Academic Press, New York.

Fuchs, N. A. (1964): Mechanics of Aerosols, Pergamon Press, New York.

Fuchs, N. A. (1971): Collection of Aerosol Abstracts, Vol. 1, Viniti, Moscow.

Fuchs, N. A. and Sutugin, A. G. (1971): Highly Dispersed Aerosols, Pergamon Press, Oxford.

Green, H. L. and Lane, W. R. (1964): Particulate Clouds: Dusts, Smokes, and Mists, Nostrand Co., Princeton, N. J.

Herdan, G. (1960): Small Particle Statistics, Academis Press, New York.

Hidy, G. M.: International Reviews in the Physics & Chemistry of Aerosols, 3 Vols., Pergamon Press, Oxford.

Hidy, G. M. and Brock, J. R. (1971): The Dynamics of Aerocolloidal Systems, Pergamon Press, Oxford.

International Atomic Energy Agency (1967): Assessment of Airborne Radioactivity, Proceedings of Symposium, Vienna, 3-5 July 1967, IAEA, Vienna.

Intersociety Committee for Ambient Air Sampling and Analysis, 4 Vols., American Public Health Association, New York.

Table 1 (continued). BOOKS CONCERNING THE BEHAVIOR OF AEROSOLS AND THEIR ANALYSIS

Irani, R. and Callis, C. F. (1963): Particle Size: Measurement, Interpretation, and Application, Wiley, New York.

Kerker, M. (1969): Scattering of Light and Other Electromagnetic Radiation, Academic Press, New York.

Kuhn, W. E., et al., Eds. (1963): Ultrafine Particles, Wiley, New York

Lapple, C. E. (1956): Fluid and Particle Mechanics, Univ. of Delaware, Newark, Del.

Ledbetter, J. (1971): Air Pollution, Vol. 1, Analysis, Marcell Dekker, New York.

Leithe, W. (1970): Analysis of Air Pollutants, Ann Arbor Science Publ., Ann Arbor, Mich.

Magill, P., et al., Eds. (1956): Air Pollution Handbook, McGraw-Hill, New York.

Mancy, K. H. (1971): Instrumental Analysis of Air Pollutants, Ann Arbor Science Publ., Ann Arbor, Mich.

McCrone, W. C., et al. (1971): Particle Atlas, Ann Arbor Science Publ., Ann Arbor, Mich.

Mednikov, E. P. (1965): Acoustic Coagulation and Precipitation of Aerosols, Plenum Press, New York.

Mercer, T. T., et al., Eds. (1971): Assessment of Airborne Particles: Fundamentals, Applications & Implications to Inhalation Toxicology, C. C. Thomas, Springfield, Ill.

Orr, C. (1966): Particulate Technology, The Macmillan Company, New York.

Orr, C. (1971): Filtration - Principles and Techniques, Marcel Dekker, New York.

Pazar, C. (1970): Air and Gas Clean-up Equipment, Noyes Data Corp., Park Ridge, New Jersey.

Richardson, E. G., Ed. (1960): Aerodynamic Capture of Particles, Pergamon Press, New York.

Table 1 (continued). BOOKS CONCERNING THE BEHAVIOR OF AEROSOLS AND THEIR ANALYSIS

Rossano, A. T., Jr. and Cooper, H. B. (1970): Source Testing Handbook for Air Pollution Control, Environ. Sci. Serv., Wilton, Conn.

Ruzer, L. S. (1968): Radioactive Aerosols, Bureau of Standards, Moscow.

Sanders, P. A. (1970): Principles of Aerosol Technology, D. Van Nostrand, Reinhold, New York.

Scorer, R. S. (1968): Air Pollution, Pergamon Press, New York.

Sheperd, H. R. (1960): Aerosols: Science and Technology, Wiley, New York.

Silverman, L., Billings, C. E., and First, M. W. (1971): Particle Size Measurement in Industrial Hygiene, U. S. Atomic Energy Commission, Monograph Series, Academic Press, New York.

Sittig, M. (1968): Air Pollution Control, Noyes Data Corp., Park Ridge, New Jersey.

Soo, S. L. (1967): Fluid Dynamics of Multi-Phase Media, Blaisdell, Waltham, Mass.

Sproull, W. T. (1970): Air Pollution and Its Control, Exposition Press, Jericho, New York.

Spurny, K. (1966): Aerosols: Physical Chemistry and Applications, Gordon and Breach, New York.

Starkman, E. S., Ed. (1971): Combustion-Generated Air Pollution, Plenum Press, New York.

Stern, A. C., Ed. (1968): Air Pollution: A Comprehensive Treatise, 3 Vols., Academic Press, New York.

Strauss, W. (1966): Industrial Gas Cleaning, Pergamon Press, New York.

Strauss, W. (1970): Air Pollution Control, Wiley, New York.

White, H. J. (1963): Industrial Electrostatic Precipitation, Pergamon Press, New York.

Zimon, A. D. (1969): Adhesion of Dust and Powder, Plenum Press, New York.

Table 2. PERIODICALS CONTAINING ARTICLES CONCERNING THE BEHAVIOR OF AEROSOLS AND THEIR ANALYSIS

A.I.A.A Journal
Air Pollution Titles
Air Quality Control Digest
American Industrial Hygiene Association Journal
Annals of Occupational Hygiene
Applied Optics
Arch. Met. Geoph., Biokl., Ser. A.
Archives of Environmental Health
Atmospheric Environment
Beiträge zur Phyzik der Atmosphere
Colloid Journal of the U.S.S.R. (English Translation of Kolloid Zhurnal)
Contamination Control
Environment
Environmental Science and Technology
Icarus
Industrial Engineering Chemistry Fundamentals
I.S.A. Transactions (Instrument Society of America)
Journal of Aerosol Science
Journal of the Air Pollution Control Association
Journal of Applied Meteorology
Journal of Applied Physics
Journal of the Atmospheric Sciences
Journal of Atmospheric and Terrestrial Physics
Journal of Colloid and Interface Science
Journal of Environmental Health
Journal of Environmental Sciences
Journal of Geophysical Research
Journal of the Meteorological Society of Japan
Journal of Meteorology
Journal of Occupational Medicine
Journal of Physics D - Applied Physics
Journal of deRecherches Atmospheriques
Journal of Scientific Instruments
Journal of the Royal Meteorological Society
Kogai to Taisaku (Journal of Pollution Control)
Kolloidhyi Zhurnal (Colloid Journal)
Kolloid-Zeitschrift and Zeitschrift Fuer Polymere
Kuki Seijo (Journal of Japan Air Cleaning Association)
Pollution Abstracts
Pollution Atmospherique
Pollution Engineering
Powder Technology

Table 2 (continued). PERIODICALS CONTAINING ARTICLES CONCERNING THE BEHAVIOR OF AEROSOLS AND THEIR ANALYSIS

Proceedings of the Royal Irish Academy
Quarterly Journal of the Royal Meteorological Society
Review of Scientific Instruments
Smokeless Air
Staub
Tellus

used as the basis of Air Pollution Abstracts by the Air Pollution Technical Information Center (APTIC) at Research Triangle Park, North Carolina. The number and diversity of sources of information on aerosols, combined with the rapidity in growth of the field, mean that any review is probably incomplete, although reviewers with experience in this field are aware of this and take pains to overcome these difficulties.

Hodkinson (1967)[53] listed and briefly discussed about 40 books and conference proceedings on aerosol fundamentals, aerosol measurement, and aerosols in the atmosphere; most of his list is included in the one given here. In the recent book by Strauss (1970),[90] H. M. Englund reviewed "the literature of air pollution," giving a paragraph of description on each of a dozen books in a section on the analysis of gases and particles, and a valuable description of periodicals pertaining to air pollution. Another extensive listing of periodicals in the field is available in Green and Lane (1964).[49]

These books and periodicals form the major part of the literature resources of those working on problems relating to aerosols. Some, by no means all, of these sources have been used in the preparation of the material which follows on methods and techniques for the measurement of stack gas particulates.

REVIEW OF METHODS FOR THE MEASUREMENT OF AIRBORNE PARTICULATES

Aerosols and Their Definition

Aerosols, as defined by Fuchs (1964)[41] and as meant by workers in aerosol science and technology, are "disperse systems with a gas-phase medium and a solid or liquid disperse phase." Aerosols are gasborne solids or droplets whose size range is approximately 10^{-7} cm to 10^{-1} cm (Fuchs, 1964),[41] but most of the interest in this field and most of the research

done is on particles of sizes from 10^{-6} to 10^{-2} cm or possibly 10^{-5} to 10^{-3} cm. The size unit frequently used in aerosol science is the micrometer (μm, 10^{-6} m, 10^{-4} cm) and the sizes of primary interest are from tenths (and recently hundredths) of micrometers to tens of micrometers. Figure 1 lists many aerosols with their size ranges, from which it becomes apparent that most, by no means all, aerosols are characterized by sizes of the order of 1 micrometer. Those particles that penetrate to human lungs are the fraction of the inhaled aerosol that is below a few micrometers in diameter (Lippman, 1970)[65] and the mass deposited there per particle is greatest for the largest size that do penetrate, two reasons for the importance of studying particle sizes on the order of 1 micrometer.

Because liquids and solids evaporate or sublimate and condense depending upon the ambient vapor pressure of their constituents in comparison with the particulate equilibrium vapor pressure (which is a function of temperature, pressure, particle size, and particle charge), molecular species may be in the gaseous or particulate state depending upon the conditions under which they are observed.

The definition of "particulate matter" has been the subject of considerable controversy (Crandall, 1971),[30] but in any case particle size distributions should be measured under conditions as closely as possible resembling the conditions under which the information is to be applied. Under other conditions, the particles may be larger or smaller or may have changed into the vapor phase. If behavior in the atmosphere of stack emissions is the concern, then these emissions should be measured in the atmosphere, under the appropriate conditions of temperature, pressure, residence time, and dilution, if such can be specified. If behavior in the stack is the concern, then the particle size distributions should be measured under the conditions existing in the stack, especially if the retention effectiveness of control methods is to be evaluated as a function of particle size.

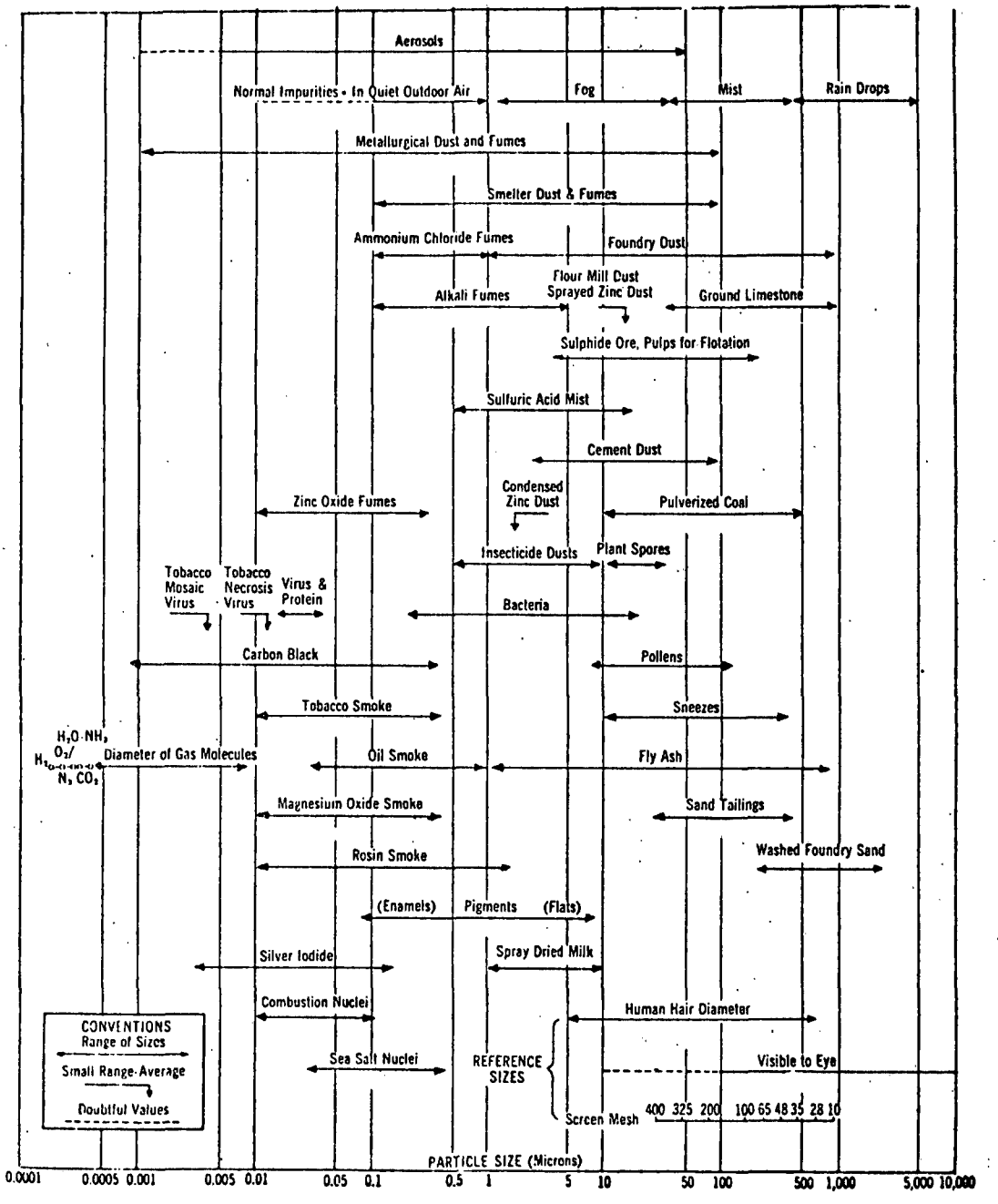

Figure 1. The size of airborne contaminants (Mine Safety Appliances Company)

Aerosols and Their Size

The behavior of aerosols is strongly dependent on size. Different particle sizes will characteristically be produced by various aerosol generation mechanisms; the smallest particles come from chemical reactions such as combustion and from condensation of vapors into droplets or solids (mists or "fumes"); somewhat larger particles come from the atomization (breaking up) of liquids by rapidly flowing gases, such as the atomization of ocean water into sprays which then dry to produce NaCl aerosol particles; and the largest particles generally come from the solid-solid interaction of grinding. If these particles are produced by man-made causes, such as by industrial processes, the type of control equipment suitable for removing them depends, in a large part, on their size distribution. (See Table 3.) The finest particles are most efficiently removed using large baghouses containing fabric filters; the coarser aerosols are removed by electrostatic precipitators, spray scrubbers, centrifugal collectors, and settling chambers, sometimes used in combination. Knowledge of particle size is necessary to predict not only behavior in emission control devices but also behavior in the atmosphere; all of the following aspects of particle behavior are size-dependent: dispersion through turbulent mixing, sedimentation due to gravity, impaction on objects due to flow curvature, nucleation of rain, scavenging by rain, reaction with gases, coagulation with other particles, reduction of visibility, electrical charging and discharging. Particle behavior with respect to deposition in the lungs of man and animals is also size-dependent: capture by the upper respiratory tract and deposition due to sedimentation, diffusion, impaction, and electrostatic attraction are all influenced by particle size. To illustrate this role of size, Figure 2 gives the contribution to visibility degradation as a function of particle size for a particle size distribution similar to that found in the atmosphere, as computed by Pueschel and Noll (1967).[81] Figure 3 shows the penetration versus size curve adopted as a standard model of the human lung for "respirable" sampling (Lippman, 1970).[65]

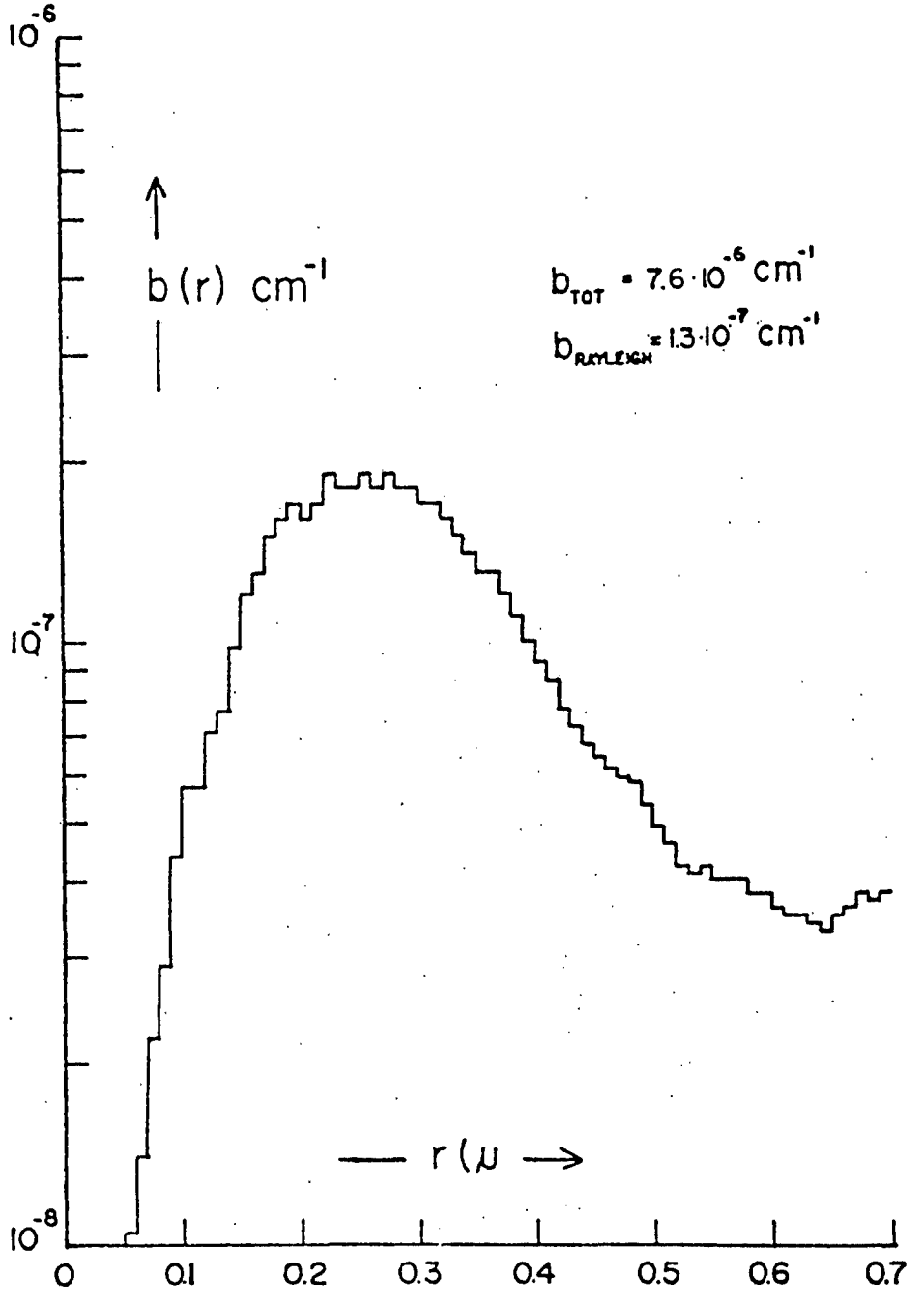

Figure 2. Product of light-scattering cross-section and measured concentration for atmospheric aerosol. From Pueschel and Noll (1967).[81] Visibility inversely proportional to b.

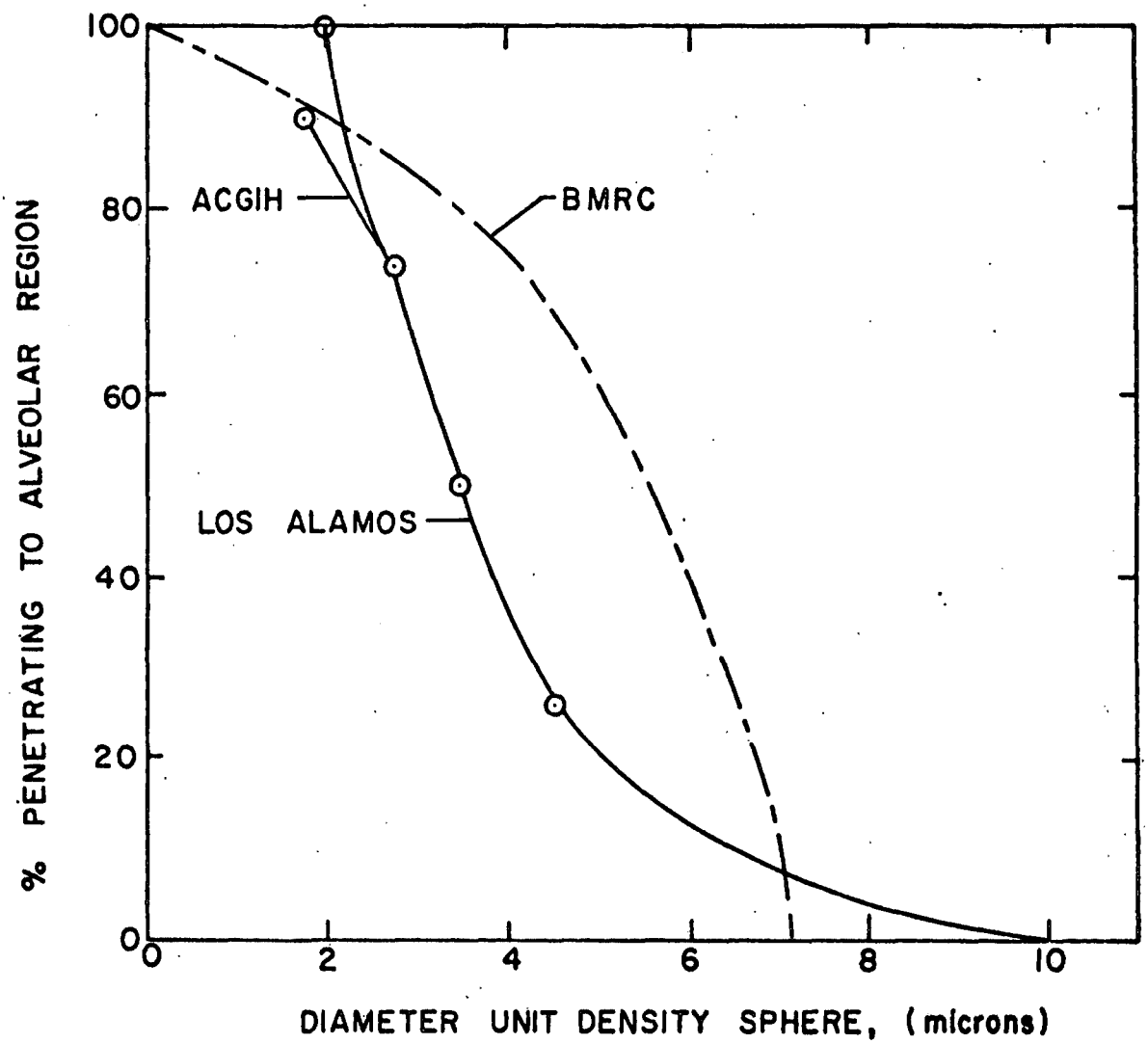

Figure 3. "Respirable" dust mass measurement sampling criteria. (Lippman, 1970)[65]

Table 3. EFFICIENCY OF DUST-ARRESTING EQUIPMENT FOR VARIOUS SIZES OF DUST (BALL AND GRIFFITHS, 1970)[18]

	Percentage efficiency at		
	50 μm	5 μm	1 μm
Inertial collector	95	16	3
Medium efficiency cyclone	94	27	8
High-efficiency cyclone	96	73	27
Tubular cyclones	100	89	40
Self-induced spray deduster	100	94	48
Spray tower	99	94	55
Venturi scrubber (medium energy)	100	99	97
Venturi scrubber (high energy)	100	99	98
Fabric filter (shaker type)	99	99	99
Electro-precipitator	99	99	86
Irrigated electro-precipitator	99	98	92

Sampling Considerations

The analysis of an aerosol, such as the analysis of particles in stack gases, usually involves the determination of certain properties characteristic of the individual particles plus the determination of the concentration, in suitable units, of the aerosol. Because the analysis is to be used to predict the behavior of the aerosol, the particle properties measured and the concentration determined will depend on what aspect of their behavior is considered important. Important particle characteristics are: size, shape, composition (e.g., density, refractive index, chemical constituents), phase (liquid or solid), and electrical charge. The characterization of an aerosol is frequently based on a total concentration measurement (in units per unit volume such as number, optical cross-sectional area, or mass) as well as a detailed

definition of the particle characteristic of greatest importance, such as particle size. If changes with time in particle or aerosol cloud characteristics are significant for the application for which the analysis is made, then the analysis technique should be able to provide such information. Real-time aerosol assessment presents a challenging problem to the instrumentation scientist, and no fully satisfactory and generalized instrumental solution is available at present.

The most important information about a measuring instrument or technique is the parameter it purports to measure. Other important characteristics include the measurement principle, range, resolution, reproducibility, and accuracy and, finally, cost (materials, effort). A minimum requirement of an aerosol analysis method is that it provide the concentration in some units (number per volume, mass per volume); additional information is obtained if the method provides the concentration as a function of particle size. Even better characterization is obtained if the parameters are given as a function of time. Selecting an aerosol analysis instrument requires primarily the selection of what concentration parameter is of significance and what kind of size is to be measured.

A number of classifications of aerosol assessment devices have been made. Friedlander (1971)[40] classified a variety of particle analysis methods, comparing their size resolution, time resolution, chemical composition determination, and concentration parameter measured. Fuchs (1968)[42] classified aerosol analysis methods into those which required capturing the particles before analysis and those which made the analysis "in-situ;" he further subdivided the methods on the basis of the physical methods used to precipitate the particles (if precipitated), the physical property used as an indicator of size, the manner in which this physical property was measured, and the property used as the basis of concentration; these last three were implicit subdivisions under his general headings of "microscopic," "macroscopic," and "other" methods of "in-situ" analysis. Lapple (1968)[60] classified aerosol analysis schemes on the basis of the property of the particles which was used to discriminate by size, the method by which this

property was used (for instance, the optical cross-section of a particle might be sensed by extinction or scattering methods), and variations of the technique used to discriminate this property; he provided examples of equipment (by manufacturer's name) and the range of particle diameters measurable by the method. Lieberman (1968)[62] also made a preliminary separation of analysis methods into those which required collection and those which measured "in-situ," and then further subdivided (not very systematically) on the basis of the physical principles used either to size-classify or to measure concentration. Davies (1970)[32] noted 201 recent studies on particle size analysis, listed by application.

In the present document, particle measurement techniques are classified on the basis of the measured particle size parameter and/or particle concentration parameters.

Aerosol assessment systems which measure particle size and concentration can, and have, been built around a great variety of principles of particle sizing and sensing. They can be generalized, however, as shown in Figure 4. A sample must be selected (minimizing bias) and transported (minimizing changes in concentration or size distribution); the size distribution may then be determined either by sorting the particles on the basis of their size and then sensing the fractions in the various size intervals into which they have been sorted, or by sensing the particles individually and sorting the signals from the sensor into intervals representing size intervals, totalling the signals in each size interval. Finally, the results of the size classification and concentration measurement must be indicated, preferably in a convenient recordable format.

Aerosols, such as particulates in stack gases, generally change with time and are rarely homogeneous. Samples taken that have small volumes compared to the volume over which significant changes take place are called "point" samples. Samples whose duration is short compared to the time over which significant changes take place are called "instantaneous" samples. Those samples which do not meet these spatial or temporal criteria are called

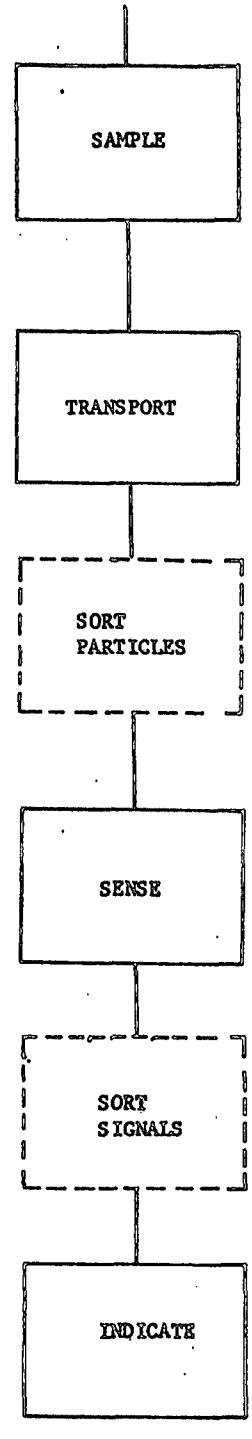

Figure 4. Generalized aerosol assessment system schematic

"integrated" samples. Integrated samples provide less detail, but the integration they perform is often useful. What is generally unacceptable is sampling bias; i.e., the preferential selection of particles of certain characteristics. A major source of sampling bias in aerosol assessment comes from anisokinetic sampling, the condition in which the velocity of the gas at the inlet of the sampling probe does not match the velocity of the gas in the gas stream being sampled. There have been some attempts to provide correction factors for anisokinetic samples (Davies, 1968;[31] Sehmel, 1972),[84] but isokinetic sampling is to be performed where possible.

Once the sampling process has occurred, this fraction of the total flow must be transported to the sorting/sensing region of the aerosol assessment device. A distinction is widely made between "in-situ" and extraction methods of measurement, the latter involving the transport of the sample away from the environment of its source. Before comparing the "in-situ" method with the extraction method, it seems advisable to clarify the concept of "in-situ" sensing. Generally, "in-situ" measurements (in the context of stack testing) are those made without transporting the sample from its original environment. In-stack transmissometers are a widely-accepted example. The desirability of "in-situ" measurements is due to the assumption that they do not alter the environment within which the sample is studied. Of course, even a transmissometer makes some change in the aerosol environment, the presence of light where there normally is little. A question arises whether a measurement made with a device immersed in the gas flow but which draws the sample through short conduits rather than allowing it to flow with the source stream is an "in-situ" measurement. We will use that term for such a measurement system, however, recognizing this possible objection. A practical definition of "in-situ" recognizes the root of the word ("in the place") and the reason for its desirability: the negligible change in the environment to which the sample is exposed. Thus, the transmissometer and any device that senses within the stack (rather than outside the stack) can be considered "in-situ" methods of measurement.

Most stack sampling devices used for routine measurements are based on the sample extraction approach; i.e., an isokinetic inlet nozzle followed by a duct, commonly called a "probe" whose length is determined by the cross-sectional dimensions of the stack at the point of sampling. The particle-laden gas flows through this probe, and the particulate matter is collected on filters or other devices on the outside of the stack wall, through which the probe passes. This procedure is specified for mass emission sampling by the Environmental Protection Agency. This method has several drawbacks that are, although acceptable for manual operation, not compatible with the meaningful operation of an automated device, and in particular for a particle sizing instrument. These problem areas are: (1) particle losses along the probe or, extraction duct, and (2) condensation within the exterior section of the probe and at the collector exposed to lower temperatures than the stack environment (or conversely the need for heating of these elements, not only above the water dewpoint, but also above the acid mist condensation temperature).

The first problem (i.e., particulate losses within the probe) is caused by the following mechanisms:

1. impaction in tube bends
2. sedimentation due to gravity
3. electrostatic scattering due to mutual repulsion by charged particles
4. turbulent deposition
5. electrostatic precipitation due to image charges
6. diffusional loss to the tube wall
7. thermal precipitation due to temperature difference between gas and tube wall.

All of these loss mechanisms are dependent on particle size, thus changing not only the total concentration but also the shape of the size distribution. Such losses in stack tests have been shown to occur (Bird, et al., 1973).[21] Further changes in the size distribution can come from:

8. coagulation, enhanced by shear in the gas velocity profile and by vapor condensation

9. re-entrainment

10. condensation.

The approximate magnitude of such influences can be estimated from formulas available in the literature (Fuchs, 1964;[41] Green and Lane, 1964).[49] In any case these losses are unacceptable for an automated-recording type instrument for the obvious reason that the fraction deposited in the probe is not incorporated in the measurement. The EPA specified procedure for manual sampling includes the requirement for probe washout and addition of the mass of particulates retained in the probe to the collected mass on the filter. Such a procedure must be ruled out for an automated measurement system. No practical method has yet been found to eliminate the deposition of particulates in probes for size distributions with mass median diameters of 10 to 20 μm and standard deviations between 2 and 5, typical of stack environments, and for probe lengths of the order of, or in excess of 4 meters required to sample representatively a stack with a flow duct area of up to about 50 m^2 (approximately 500 square feet). The only method by which dust deposition can be reduced, albeit not eliminated, is by increasing the flow velocity to very high values (of the order of 20 m/s or more) to produce re-entrainment of particles collected on the probe walls. This procedure may be marginally acceptable for total mass measurements, but not for accurate sizing purposes since particle agglomeration and clustering can be expected in any situation where re-entrainment plays a significant role.

No line losses are acceptable unless they constitute a known fraction of the inlet loading, a highly unlikely condition indeed. Obviously the conclusion is that since the probe length cannot be minimized if the collection-sensing device is exterior to the stack, the only rational solution is to place the device within the stack duct to be sampled. This method also resolves in large measure a second problem: the condensation of water and acid mist at the measurement site. By operating the sampler

wholly at the source temperature, condensation can be precluded. At typical stack gas temperatures of 150°C to 260°C (300°F to 500°F) all the water is in the vapor phase and if the collection-detection head is exposed to the same environment, no condensation will occur.

The measurement of particulate mass and especially of the size distribution by mass of stack emissions can only be determined meaningfully at two locations: (1) within the stack itself, or (2) downstream from the stack exit (stack plume). The first of these approaches can provide information on the particulate emissions as they are generated, and within the high temperature environment of the stack itself. The second approach would provide a measure of the particulates as they will eventually disperse in the atmosphere. Both of these approaches have their merit.

Sample extraction, by lengthy probes and requiring thermal control, is an approach that we believe is an unacceptable compromise between the two alternatives presented above, and it is especially incompatible with representative size measurements.

Method of Particle Assessment

Once a sample of the aerosol has been withdrawn and transported, the aerosol assessment system obtains a concentration measurement by sensing the particles and may obtain more information by sorting the particles according to some property before sensing them or by sorting the signals produced in sensing them. A summary of methods for sorting particles is contained in Tables 4 and 5. A summary of methods for sensing particles is in Table 6. There is little overlap between physical mechanisms used to sort particles and those used to sense them. In sorting particles, it is desirable to segregate the particles on the basis of some characteristic, whereas in sensing them it is desirable to leave them unaffected by the sensing process. Sorting the particles involves the danger of changing them and thus biasing the sensing of the particles, but sorting them is

necessary when the desired physical basis for size discrimination (e.g., aerodynamic diameter) is different from the property used to obtain concentration (e.g., mass).

Mechanisms for size classifying particles, independently of sensing them, are shown in Tables 4 and 5, along with examples of the use of these mechanisms and the "size" given by such techniques. Table 4 is adapted from Lapple (1968).[60]

Most of the techniques for particle size discrimination which have emerged since Lapple's review are variations on themes presented there. Some significant new developments are presented in Table 5, a supplement to Table 4.

An aerosol assessment system must have some way of sensing the particles, either as individuals or as an aggregate. Three kinds of general approaches for measuring particle size distributions can be identified:

1. Those which use one property of the particles to sort them into size intervals and another property to measure their concentration.

2. Those which measure only one property of the particles and either:

   a. measure this property particle-by-particle and sort the signals from these measurements to get a size distribution as well as a concentration, or

   b. measure the aggregate of the property for a number of particles to get an average concentration.

These possibilities are shown schematically in Figure 5. Which method is chosen will depend on what information is desired and upon the relative difficulty of sorting particles or sorting signals to get size classification.

Table 4. SUMMARY OF TYPES OF SIZE-ANALYSIS TECHNIQUES

Size-discriminating property		Technique and variations			Example of common apparatus[a]	Range of applicable particle diameter,[a] microns
Type	Character of mechanism					
Geometric	Physical barrier	Sieving	Wet		Ro-Top (Tyler), Pulverit Shaker, Sonic Sifter (Allen-Bradley); electro-formed sieves (Buckbee Mears)	5-1000
			Dry			
		Ultrafiltration			Membranes, Millipore, Gelman	0.01-5
Mechanical or Dynamic (in fluids)	Inertia	Impaction on surface			Greenburg-Smith; May, Anderson; Cassella; Battelle	0.1-100
		Pressure pulse (sonic)			IITRI	10-1000(?)
	Terminal settling velocity (in gravity or centrifugal fields) (possibilities of using electrical fields exist)	Elutriation	Single fractionation	Liquid	Schone	5-100
				Gas	Roller (G); Federal Pneumatic (C); Bahco (C)	
			Series fractionation	Liquid	Andrews	
				Gas	Houltain "Infrasizer"; Gonell; Aminco	
		Sedimentation	Layer methods (differential)	Liquid	Palo Travis (G); Werner (G), MSA-Whitby (G, C); Kaye (C)	1-100(G) 0.02-10(C) 0.002-1(UC)
				Gas	Micromerigraph (Sharples) (G), Conifuge (C)	
			Suspension methods	Differential-liquid	Pipette (Andreasen) (G); hydrometer (G); diver (G); Komack (C); turbidimeter (G, C); differential manometer; gamma-ray absorption	
				Integral-liquid	Sedimentation balance (Oden, Cohn, Sartorius) (G); manometer (Weigner) (G); pendulum (G)	
				Integral-gas	Aerosol spectrometer (Goetz) (C); sedimentation channel (G)	
		Decantation (in liquid only)			Cummings	1-100(G)
		Photo-sedimentation (photography of particle streak)			Carey & Stairmand	1-100(G)
	Diffusion	Particle displacement (random walk)			Milikon cell	0.01-1
		Particle deposition			Diffusion battery	

Table 4 (continued). SUMMARY OF TYPES OF SIZE-ANALYSIS TECHNIQUES

Size-discriminating property					
Type	Character of mechanism	Technique and variations		Example of common apparatus[a]	Range of applicable particle diameter,[a] microns
Optical	Imaging[b]	Light microscopy		American Optical; Bausch & Lomb; Leitz; Nikon Reichert; Tiyodo; Unitron; Vickers; Wild; Zeiss, etc. Flying-Spot counters	0.2-100
		Ultramicroscopy (gives mean size only)			0.005-1
		Electron microscopy		Hitachi; Norelco; RCA; Siemens	0.002-15
	Transmission (spectral)	Extinction measured as function of wavelength		Bailery	0.1-2(?)
	Scattering	Single particle count	Right angle (90°)	Royco counter (gas, liquid); O'Konski	0.2-50 (higher with microwave)
			Angular		
			Forward		
			Polarization	Owl (monodisperse aerosols)	
		Macroscopic (gives mean size only)		Sinclair-Phoenix (aerosol concentration)	
	Diffraction	Light			
		X-ray			
		Laser (holography-reconstruction of diffraction pattern)		Stat Volt Co.	
Electrical	Resistance	Alteration of current flow by particles		Coulter count	1-100
	Capacitance	Potential pulse due to particle deposition			
	Charge	Tribo-charging		Guyton counter	
		Induction charging			
		Corona charging		Drozin and LaMer; Mercer	

Table 4 (continued). SUMMARY OF TYPES OF SIZE-ANALYSIS TECHNIQUES

Size-discriminating property		Technique and variations	Example of common apparatus[a]	Range of applicable particle diameter,[a] microns
Type	Character of mechanism			
Magnetic	Applicable to magnetic materials only	Particle migration in magnetic field; magnetic pulses		
Thermal	Particle deposition	Particle migration in thermal gradient	Cassella;	0.1-10(?)
Physico-chemical	Condensation	Growth of nuclei with controlled supersaturation	GE condensation nuclei counter	0.01-0.1(?)

[a]Items in parenthesis have following significance: C = in centrifugal field; G = in gravity field; UC = ultracentrifuge.

[b]Replicas may be used in place of particles that might evaporate or be destroyed during measurement; e.g., in electron microscopy to avoid the effect of vacuum or electron beams, and in magnesium oxide film method for measuring size of drops.

Table 5. RECENTLY DEVELOPED PARTICLE SIZING TECHNIQUES

Size discriminating property	Mechanism employed	Technique	Example
Dynamic	Inertia	Impaction into stagnation zone without obstacle	Cascade centripeter (Hounam and Sherwood, 1965)
		Sound pulse from impact	Microdynamometer (Benarie and Quetier, 1970)
		Impaction on rotating rod	Roto-rod sampler
			Giant particle sampler (Noll, 1970)
	Terminal velocity	Hindered settling versus pressure	(Turner and Fayed, 1970)
		Electrical mobility	Mobility analyzer (Whitby and Clark, 1968)
	Diffusion	Laser Doppler shift	(Hinds and Reist, 1973)
Electromagnetic	Transmission/ extinction	Quenching of laser by particles in cavity	(Schleusener, 1968)
		Single particle extinction measurements	(Knollenberg, 1971)
	Scattering	Forward scattering of x-rays by single particles	(Brusset and Donati, 1969)

Table 5 (continued). RECENTLY DEVELOPED PARTICLE SIZING TECHNIQUES

Size discriminating property	Mechanism employed	Technique	Example
Electrical	Charge	Charge measurements on particles charged by impact	(Abbott, Dye, Sartor, 1972) (Adams and Smith, 1971) (Keiley, 1960)
Thermal	Evaporative cooling	Hot-wire anemometry	(Goldschmidt, 1965)
Physico-chemical	Combustion	Measurement of light from single particle combustion	Scintillation counter (Binek and Dohnalova, 1967)

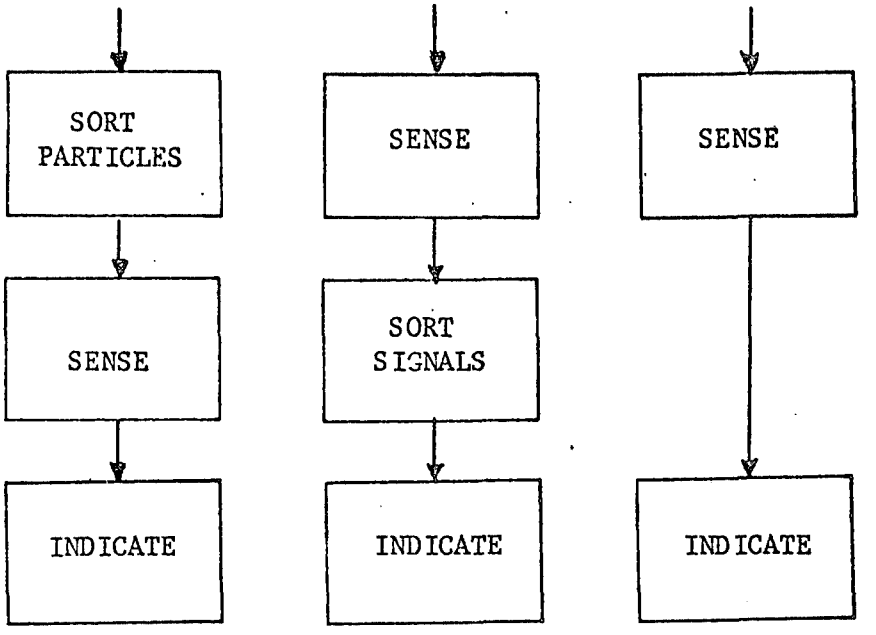

Figure 5. Three types of aerosol assessment systems in general use

Analysis of the signals from particle sensors generally produces as data one of the following:

1. A total concentration obtained by summing the signals.

2. A number concentration based on counting the number of signal pulses.

3. A size distribution obtained by subdividing the signal pulses into size intervals (usually on the basis of amplitude) and counting the number (or totalling the "quantity") contained in each size interval.

The processing of electrical signals is easier and thus has received much more attention than the sorting of particles, and the techniques for the former are more sophisticated and less prone to error than the latter. Thus, it would be advantageous to sort signals, rather than sort particles, if the signals from the sensor give the size information desired. Unfortunately, the sensor signals often are not unequivocably related to particle size. The scattering of light by particles can be converted

into a convenient electrical signal by suitable optics and a photomultiplier tube, but the signal amplitude is not an unambiguous function of size, for example. Generally, the "size" of interest is related to the motion of the particle in the gas (aerodynamic diameter for sedimentation and impaction and other motion in an acceleration field, mobility for diffusion and electric migration). In general, however, particle dynamics do not provide a direct sensing mechanism. (One exception to this is the Doppler shift method of measuring the mobility of diffusing, laser-illuminated particles (Hinds and Reist, 1973).)[51] To obtain distributions based on a size related to motion, it is generally necessary to sort the particles dynamically before sensing them, using size discriminating methods such as sedimentation elutriators, aerosol centrifuges, diffusion batteries, impactors, and electrical mobility analyzers.

Table 6 lists a number of concentration sensing techniques and the quantities (concentration units) they yield.

In their brief review of "particulate emission and process monitors," Dorsey and Burckle (1971)[34] summarized much information about particle sensors in a tabular form, and Table 7 is taken from that reference. The particle properties are self-explanatory. The sensing techniques are mass determination by gravimetric techniques, light scattering or absorption in a variety of realizations, gamma ray absorption (Holze and Demmrich, 1969),[55] beta absorption, electrical charge transfer from charged particles to a grounded collecting surface, and the absorption of acoustical energy. This table indicates why certain methods cannot yield true mass concentrations, if such are desired.

Much more could be written about the various ways of measuring particle size and sensing concentration, including the possible combinations of these two to produce a variety of instruments for aerosol assessment. Rather than attempt an encyclopedic exposition of these possible measurement systems, the authors now turn to answering the following

Table 6. VARIOUS PARAMETERS OF AEROSOL CONCENTRATION AND TECHNIQUES BY WHICH THEY MAY BE DETERMINED

Concentration	Available techniques
Number	Counting of images... optical microscopy, electron microscopy, holography, etc.
	Counting of electrical pulses from photomultipliers sensing light scattering from single particles
	Counting of sonic pulses
	Counting of electrical pulses from collection of charged particles
	Counting of scintillation pulses produced by combustion of particles
	Coulter counting
	Counting of hot-wire anemometry pulses
	Measurement of total scattered light from condensation of nuclei
Diameter	Small ion deposition on particles (see Duwel, 1968)
Area	Absorption of gas on particle surfaces
	Contact electrification
Settling velocity	Pressure drop in dust-measuring nozzle (see Duwel, 1968)
Volume	Coulter counting (electrical resistance)
Optical activity	Transmissometer Nephelometer Total scattering meters LIDAR Opacity matching
Mass:	
A. Total mass, composition unknown	Weighing Beta absorption Mechanical resonance Impact momentum - energy sensing
B. Mass, composition known	Coulter counting, integrated Gas discharge obstruction counting, integrated Gamma absorption

Table 6 (continued). VARIOUS PARAMETERS OF AEROSOL CONCENTRATION AND TECHNIQUES BY WHICH THEY MAY BE DETERMINED

Concentration	Available techniques
	Chemical methods: conductivity, colorimetry, calorimetry, fluorimetry, atomic absorption, neutron activation analysis, etc.
	Scintillation pulse height, integrated
Other	Acoustic absorption Electrical charge transfer: Ionic charging Impact momentum charging Tribo-electric charging
	Filter resistance (see Duwel, 1968)[37]

Table 7. SENSOR PRINCIPLES AFFECTED BY PARTICLE PROPERTIES[a] (DORSEY AND BURCKLE, 1971)

Particle Property	Mass	Light	Gamma	Beta	Electrical	Acoustical
Size	0	+	0	0	+	+
Shape	0	+	0	0	+	+
Density	0	+	0	0	+	+
Color	0	+	0	0	0	0
Resistivity	0	0	0	0	+	+
Composition	0	0	+	0	0	0

[a]Particle properties that may have a significant effect on measurement accuracy; (+) indicates a major influence is to be expected, while (0) is indicative of little or no effect.

questions as guides to the method or methods which will yield the most promising solution for source aerosol analysis:

> Which of the various possible size parameters is of most importance? How should it be measured? and
>
> Which of the various concentration measurements is desired? How should it be measured?

SIZING ON THE BASIS OF AERODYNAMIC DIAMETER

General Considerations

Based on the review on aerosol analysis given above, Table 8 lists those size parameters that can be discriminated by present day aerosol analysis equipment.

The linear dimension of a particle would be important as to how it behaved with regard to sieving and with regard to the mechanism of interception, sometimes important in filtration.

The mobility, a parameter related to aerodynamic size, is important in the prediction of particle behavior in the presence of electric fields and in predicting particle diffusion.

Table 8. METHODS OF PARTICLE SIZE DISCRIMINATION

Size parameter	Some appropriate methods of discrimination
Linear dimension	Sieving Microscopy
Mobility equivalent diameter	Diffusion battery Electrostatic mobility analyzer Laser doppler shift Millikan cell
Aerodynamic equivalent diameter	Impactor Aerosol centrifuge Sedimentation cell Elutriator
Optical equivalent diameter	Photo-counter Single-particle transmissometer
Volume	Coulter counter Gas discharge counter
Other	Contact or impact charging Sonic analysis of impact Deposition in thermal field Scintillation analysis Evaporative cooling of hot-wire anemometer

Note: These methods either perform the size selection before sensing or analyze the signals from the sensor, as discussed before.

The aerodynamic diameter indicates particle behavior under the force of gravity and under inertial acceleration in fluid flow fields, such as acceleration caused by curvature of the flow; the mechanisms of impaction and sedimentation and, indirectly, diffusion, depend on the aerodynamic diameter and these mechanisms are quite important in filtration and in lung deposition. Furthermore, the behavior of particles in such control devices as cyclones, Venturi scrubbers, electrostatic precipitators, filters, and settling chambers also depends directly or indirectly upon aerodynamic diameter. The aerodynamic diameter comes into play in the dispersion of particles in the atmosphere, controlling the sedimentation of particles, their capture by obstacles in a wind, and their scavenging by rain.

The optical equivalent diameter (or light scattering cross-section) is significant in the effect of particles on visibility.

Other measures of particle size have special contexts that are less directly related to particle behavior and are of interest for special and more restrictive particle studies.

In sampling stationary sources, the goals are the design and evaluation of control devices or the determination that they are not necessary. These devices are being installed primarily to see that humans, other animals, and plants are not injured by the effluent. Of the size parameters listed above, the mobility and the aerodynamic diameter are the two most important to the questions of control device effectiveness and aerosol transport and deposition (on plants, in lungs). Although a good case can be made for the importance of particle mobility (which is indirectly related to aerodynamic diameter), a generally better case can be made for the aerodynamic diameter as the most useful size parameter in this context, especially as this parameter has been chosen to be the basis of the measurements for "respirable dust" (Lippman, 1970).[65]

The aerodynamic diameter of a particle of arbitrary shape is that diameter which would give the same terminal settling velocity for a sphere of unit density.

Mathematically,

$$v_s = \left[\rho_o D_a^2 C(D_a)/18\mu\right] g \qquad (1)$$

where v_s = terminal velocity
ρ_o = unit density
D_a = aerodynamic diameter
$C(D_a)$ = Cunningham correction factor
g = gravitational acceleration
μ = coefficient of viscosity of the gas.

The term in brackets, the "relaxation time" of the particle, governs the behavior of particles falling due to gravity (sedimentation) or crossing the streamlines of a gas to strike an obstacle deflecting the gas (impaction).

To reiterate, the aerodynamic diameter is significant in particle response in a number of control device techniques, in particle transport and residence time in the atmosphere, in deposition on plants, and in deposition in lungs.

Selection of Method to Measure Aerodynamic Diameters

Aerosol elutriators and centrifuges separate particles on the basis of aerodynamic diameter (equivalently, sedimentation velocity) by passing them through a channel at right angles to a field which produces a velocity toward the walls of the channel. In elutriators, the channel is generally formed by parallel plates having relatively narrow spacing, and the field is that of gravity. In aerosol centrifuges, the channels

are various: the annular region between rotating cylinders, a spiraling duct on the surface of a rotating cone, a spiraling duct on a rotating disk, etc.; the field being the result of centrifugation. To analyze the deposit in elutriators or centrifuges requires a certain amount of disassembly, generally. Furthermore, even if the device is operated at a constant flow rate (and constant rotation for the centrifuges), the particle deposit is a complicated function of position and particle aerodynamic diameter (Stöber and Zessack, 1964).[89] The flow rate (or rotation rate) must be varied if it is desired to get a particle size distribution using a single sensor located somewhere along the deposit, and this data may require considerable analysis before yielding a particle size distribution. Aerosol centrifuges (Goetz, 1957;[46] Stöber and Flachsbart, 1969)[88] have been found to have significant secondary flows (Hochrainer, 1972),[52] further complicating the analysis problem, and attempts to correct for the secondary flow (Gerber, 1971)[45] have been found inadequate so far (Stöber and Boose, 1973).[87]

The deposition in centrifuges and elutriators is a function of both particle size and position, making the measurement of what is deposited an unattractive method for particle sizing. Instead of deposition, penetration might be measured to give size information, and one could design a device consisting of a series ("cascade") of centrifugal elements or elutriators, the penetrations of which could give particle size data. As we show next, such a device would have size separation characteristics inferior to those of impactors.

Consider the generalized elutriator or aerosol centrifuge geometry depicted in Figure 6.

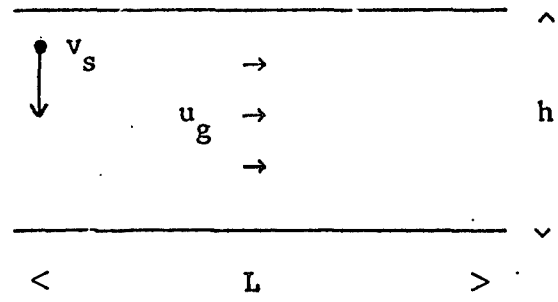

Figure 6. Generalized elutriator/centrifugator

For parallel plates spaced h apart and having length L, the fraction e of aerosol particles having settling velocity v_s that are caught when the average flow velocity is u_g is given by (Fuchs, 1964):[41]

$$e = v_s \, L/u_g \, h \, , \; e \leq 1. \qquad (2)$$

For elutriators, under laminar flow conditions and ignoring the Cunningham slip correction term, this velocity is proportional to the square of the aerodynamic diameter and we can write

$$e = k \, D_a^{\,2} \qquad (3)$$

where k is a coefficient which takes into account the other variables at a particular set of operating conditions. Efficiency curves for impactors and elutriators go from values of 0 percent efficiency to 100 percent efficiency as particle size increases. The particle size interval over which the change takes place is a measure of the ability of the device to discriminate on the basis of size. One can define the relative standard deviation, RSD, of such efficiency curves in terms of the particle diameter corresponding to 84 percent efficiendy, D_{84}, and the diameter corresponding to 50 percent efficiency, D_{50}:

$$RSD = (D_{84} - D_{50})/D_{50} \, . \qquad (4)$$

The smaller the RSD, the better is the size selectivity of the instrument. It can be shown that elutriators and cyclones that operate with laminar flow and have the aerosol uniformly distributed across their inlets have RSD $\doteq$ 0.30. Elutriators and cyclones that operate with turbulent flow have even larger RSD's; from data on such cyclones given by Liethe and Mehta (1973), it can be estimated that RSD ~ 4. These are considerably larger than RSD's characteristic of impactors designed by Lundgren (1967),[67] Mercer and Chow (1968),[71] Mercer and Stafford (1969),[72] and Cooper and Spielman (1973),[29] RSD $\leq$ 0.2.

The gradualness of the efficiency curves for elutriators and cyclones is not always a drawback to their use, as they can be used to model the response of the human respiratory system (Lippman, 1970).[65] For the determination of size distributions, however, this lack of sharpness of cut is undesirable.

The remaining methods on the list of devices which size classify according to aerodynamic diameter are impactors and sedimentometers. Sedimentometers operate by following the change in concentration with time of a sample held in a special chamber or by following the buildup of deposit in time under such conditions. Sedimentation measurements for aerosols present a number of difficulties, one of the most significant of which is convection in the sample cell, a problem which would only be aggravated by working with samples at fluctuating temperatures, such as stack samples taken "in situ." The rate of settling is proportional to the square of the aerodynamic diameter, approximately, which means that particles having a range of 10:1 in aerodynamic diameter will have a range of 100:1 of times characteristic of the settling in the chamber. To sample a volume of air to obtain a sufficient mass of aerosol on which the sensor can give significant measurements may require an unwieldy, large settling chamber or a series of sampling/waiting-to-settle cycles, accompanied by an averaging of the changes in concentration (or deposit) with time. Sedimentation chambers do not seem likely

prospects for aerodynamic size classification for source monitoring or control device testing.

Collection and Sizing by Inertial Impaction

This analysis of the potential ways to discriminate on the basis of size for a source test device has eliminated or nearly eliminated all alternatives except for impactors.

Literature recently published on the adaptation of impaction to source testing indicates that this conclusion is shared by other investigators. Pilat, Ensor, and Bosch (1970, 1971)[80] have described a six-stage, multi-jet cascade impactor for stack sampling. Bird, McCain, and Harris (1973)[21] concluded that inertial techniques (impactors and cyclones) were most appropriate for sizing stack effluents and tested the following: Modified Brink impactor, Andersen stack sampler impactor, University of Washington Source Test Impactor, Environmental Research Corp. TAG Sampler, modified Battelle CIS-6 Impactor, and a McCrone Associates Parallel Cyclone Sampler. They found some difficulties in using these for in-stack sampling, generally problems of particle rebound and re-entrainment, but these problems would occur whether the same impactors were used in-stack or after sample extraction through probes. Bird, et al. (1973),[21] reported a significant loss of particles (especially those greater than 2 microns diameter), due to the use of probes and sampling lines, in their comparison of size distributions from in-stack and out-of-stack sampling.

The feasibility of using a cascade impactor placed inside the source stack has been amply demonstrated by the nearly 20 years of such experimental experience reviewed by Brink, et al. (1972).[23] This article discusses in-stack monitoring in a variety of situations with the Brink (1958)[22] adiabatic impactor manufactured by Monsanto. The normal cut-offs are 2.5, 1.5, 1.0, 0.5, and 0.25 microns. For some applications,

stages with larger cutoffs were added, primarily to keep the smaller cut-off stages from overloading. One of the interesting bits of experience was that grounding the impactor helped reduce reentrainment of particles; reentrainment was most severe at low humidities. By using special gasketing, the cascade impactor worked on metal fume at 1500°F, at which temperature the 316 stainless steel maintained its integrity. (It is not mentioned whether or not there was a viscous coating that withstood these temperatures; however, although such a coating may not have been necessary because the small size of fume particles would, in general, inhibit their reentrainment.)

Downs and Strom (1972)[35] successfully adapted a Brink cascade impactor to sample industrial stacks up to temperatures of 450°F.

Carpenter and Brenchley (1972)[26] also concluded that there would be real utility in an instrument that measured mass concentration as a function of aerodynamic diameter. To do this, they built a cascade impactor which impacted the particles onto piezoelectric crystal oscillators. Their work is discussed in a following section of this document.

The inertial impactor operates on the principle that particles in a moving stream will impact upon a perpendicular surface provided that the inertia of the particles is sufficient to overcome the drag exerted by the air stream deflected by the impaction surface. The impaction process can be characterized by the impaction parameter ψ which is defined by the following expression:

$$\psi = \frac{C \rho_p v d^2}{18 \mu D} \qquad (5)$$

where ρ_p = particle density
v = jet velocity
d = particle diameter

μ = gas coefficient of viscosity

D = jet diameter

C = Cunningham correction factor defined empirically as:

$$C = 1 + 2.492\ \lambda/d + 0.84\ \lambda/d \exp(-0.435\ d/\lambda) \qquad (6)$$

where λ is the molecular mean free path.

Two general impaction configurations have been used in practical instrumentation and have been evaluated by researchers in this field, rectangular and round impaction jets. From Mercer and Chow (1968),[71] Mercer and Stafford (1969),[72] and Marple (1970),[68] it becomes apparent that for sizing purposes the round cross-sectional jet is to be preferred because of sharper cut-off characteristics. In addition, the typical value of $\sqrt{\psi_{50}}$ of Equation 5 for round jets is about 0.3, whereas for rectangular jets it is about 0.45, implying higher jet velocities for a given particle cut-off size for the rectangular configuration. Finally, the round jet geometry is generally more compatible with automatic sensing of the mass deposited, particularly by means of beta radiation absorption (Lilienfeld, 1970;[63] Lilienfeld and Dulchinos, 1972).[100]

Mitchell and Pilcher (1959)[74] determined that for round jets a near-optimum particle size cut-off sharpness is found for an S/D ratio of 0.375. (S is the jet-to-impaction surface gap.) At 50 percent impaction efficiency, ψ was found to be equal to 0.084 ($\psi^{1/2}$ = 0.29; see Figure 7).

Marple (1970)[68] concludes his exhaustive analysis of impactors as follows: "Application of the above studies on the impaction efficiency curves indicates that a round impactor should be one with throat length of about one jet diameter, a jet-to-plate distance of 1/2 jet diameter, and operated at a Reynolds number of approximately 3000. Such an impactor should have a fairly sharp cut-off characteristic, is reasonably

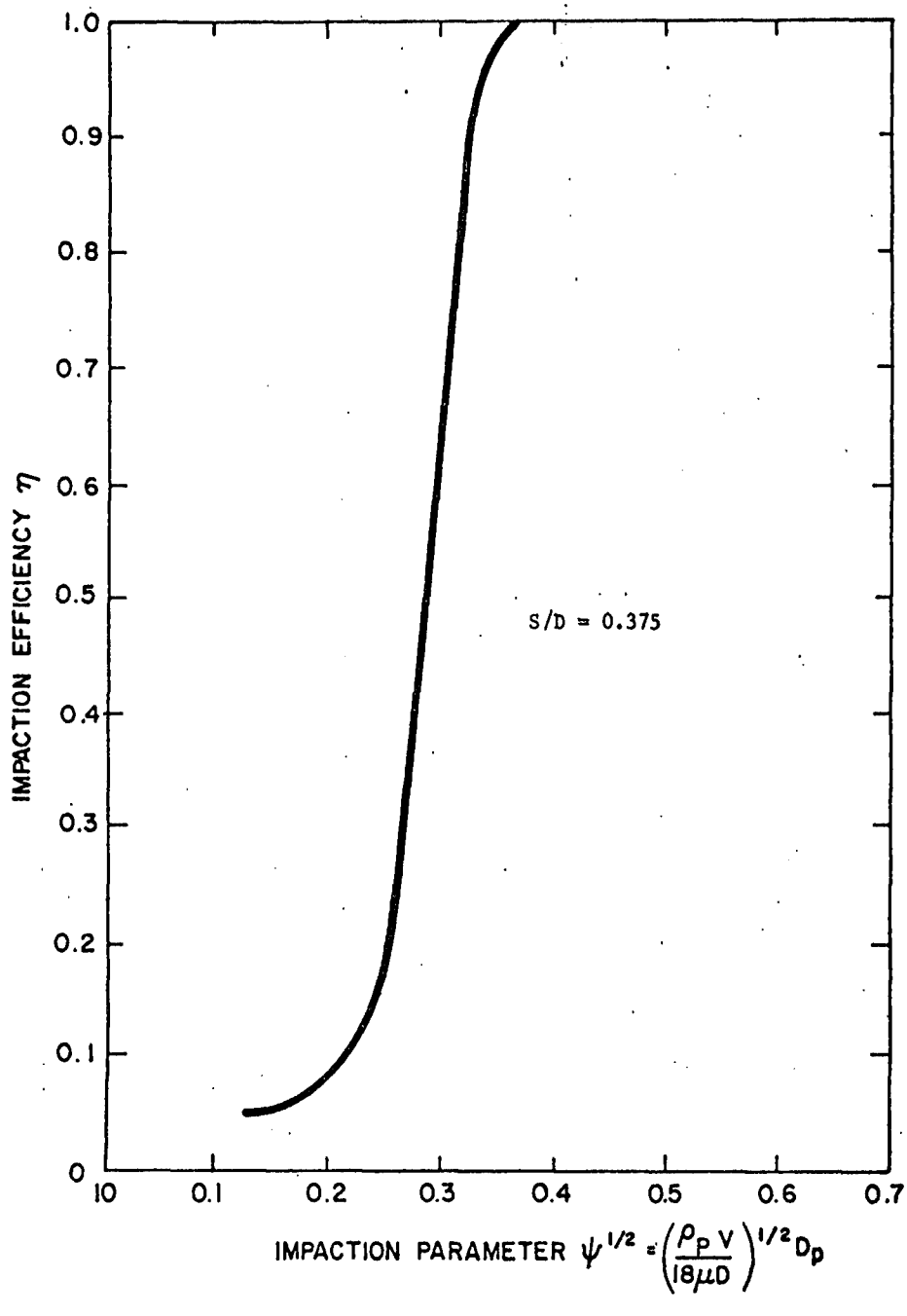

Figure 7. Circular nozzle impaction efficiency as a function of ψ. (Mitchell and Pilcher, 1959)[74]

insensitive to small variations in the jet-to-plate distance which undoubtedly would occur in actual application, and has dimensions that are reasonable from a manufacturing standpoint."

For particles larger than about 0.1 μm under STP conditions, Equation (6) can be approximated to

$$C = 1 + 2.492\ \lambda/d\ . \tag{7}$$

Replacing Equation (7) in (5) and solving for d, we obtain:

$$d_{50\%} = \frac{-2.492\ \lambda + \left((2.492\ \lambda)^2 + \frac{72\mu\ D\ \psi}{\rho_p\ v}\right)^{1/2}}{2}\ . \tag{8}$$

Figure 8 is a plot of $d_{50\%}$ versus D, the jet diameter, for several flow rates. The nozzle pressure drop Δp is assumed to be essentially equal to the velocity pressure:

$$\Delta p = (1/2)\rho_a\ v^2\ , \tag{9}$$

where ρ_a is the air density and thus λ, the molecular mean free path at the impaction point, would be increased following the relationship:

$$\lambda = \lambda_o\ \frac{P_o + \Delta p}{p_o} \tag{10}$$

where λ_o = the mean free path at standard conditions
p_o = the pressure at standard conditions.

The curves of Figure 8 are based on Equations (8), (9), and (10).

The converging behavior of the curves of Figure 8 (dashed lines) for the smaller jet diameters, is associated with critical flow conditions

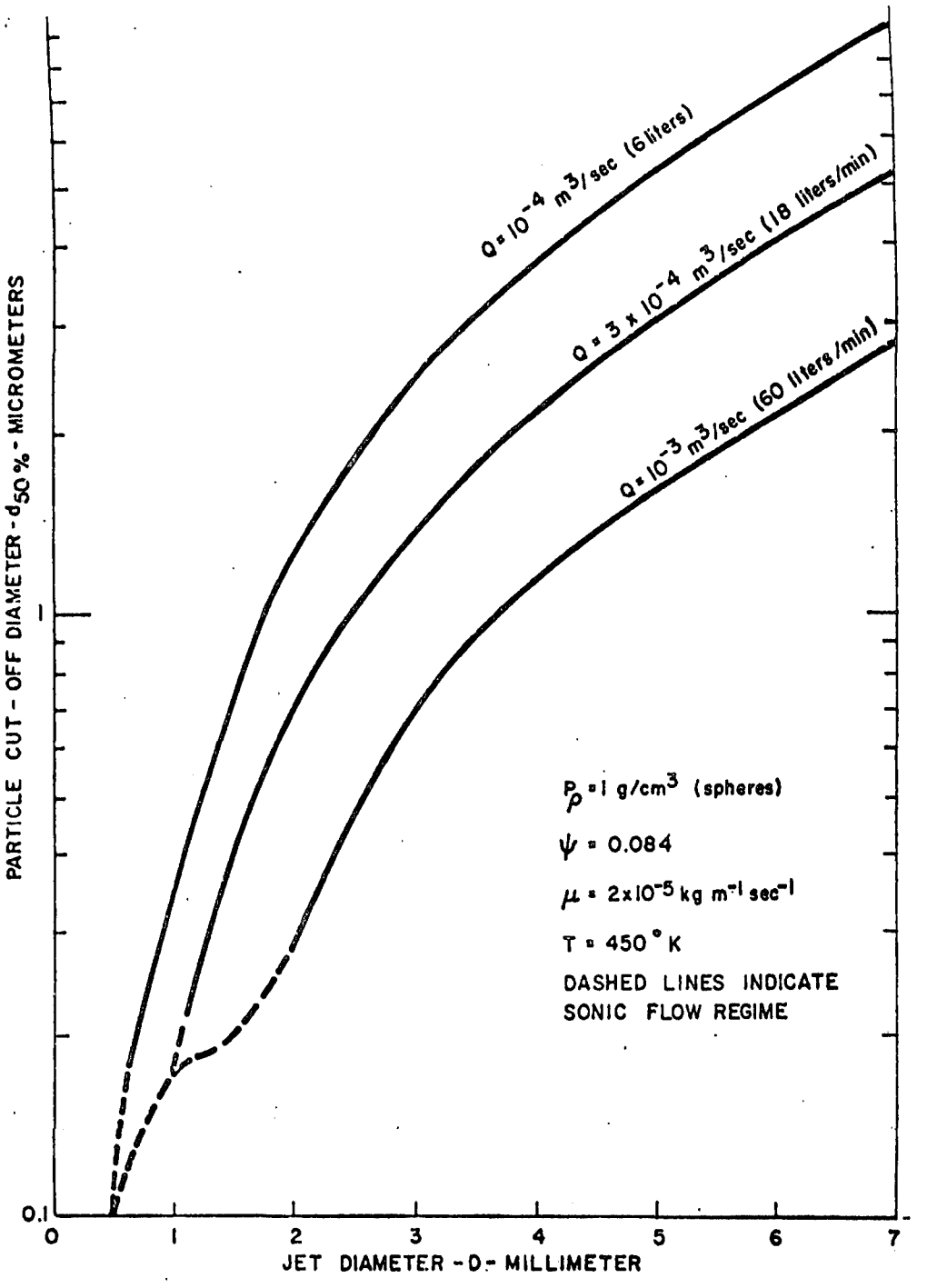

Figure 8. Particle cut-off diameter for a circular nozzle as a function of jet diameter

(e.g., sonic velocity) at the jet nozzle. This critical flow regime may be used to maintain a constant flow rate through the system by designing the last impaction stage for such limiting conditions as are achieved when the ratio of downstream to upstream pressures across the critical nozzle is equal or less than 0.53. Under such conditions the flow rate Q_{crit} becomes (Lilienfeld, 1970):[63]

$$Q_{crit} = A \left[k(p_u/\rho_u) \left[2/(1+k)\right]^{(k+1)/(k-1)} \right]^{1/2} \qquad (11)$$

where A = the jet area

k = the ratio of specific heats (1.4 for air)

p_u = upstream pressure

ρ_u = upstream density

Under stack gas conditions ρ_u can be expected to vary as an inverse function of temperature, and thus Q_{crit} depends on the stack effluent temperature. This dependence, however, is not too severe since Q_{crit} varies as the 1/2 power of the temperature. The particle cut-off size for each impaction stage remains essentially unaffected by temperature changes when using a critical orifice as flow control. This results from a fortuitous combination of factors: the critical flow is proportional to 1/2 power of temperature, and the particle cut-off size is inversely proportional to the 1/2 power of the flow rate (for a constant geometry), thus the particle cut-off diameter is inversely proportional to the 1/4 power of temperature as related to the change in critical flow. However, since the coefficient of viscosity of air varies approximately as the 2/3 power of temperature, and the particle cut-off size varies approximately proportional to about the 1/2 power of temperature due to the change in viscosity. Combining the two opposing effects, the particle cut-off size varies only as 1/12 power of temperature in this configuration, and can thus be neglected.

THE MEASUREMENT OF MASS CONCENTRATION

General Considerations

At present both the standards for air quality and the standards for source emissions are based on mass concentration of particulates per unit volume of gas (air), as specified in the Federal Register (EPA, 1971).[38] Mass concentration measurements are thus the generally accepted particulate emission parameter for source testing (Sem, et al., 1971)[1] and, therefore, the sensing principle to be used must respond to particle mass rather than some other particle property.

The criteria of applicability and usefulness of any mass sensing technique to the solution of this problem are: (1) ability to provide an electrical output signal that can be related to collected mass; (2) compatibility with automated and unattended operation, as well as continuous or continual recording; (3) compatibility with the environmental conditions prevailing within the stack; and (4) operational reliability. Table 9 summarizes the application of these criteria to the three mass sensing techniques mentioned above. This tabulation indicates that from all points of view, beta attenuation appears as the preferred method of mass sensing.

Table 9. COMPARISON OF MASS SENSING TECHNIQUES

Technique	Criteria			
	(1)	(2)	(3)	(4)
Beta attenuation	Good	Good	Fair to good	Good
Resonance sensing	Good	Fair to impractical	Fair	Fair
Gravimetry	Impractical	Impractical	Fair to impractical	Fair to low

Methods used heretofore have been based either on the pragmatic approach of determining the weight increment of a filter sample, or on the measurement of a variety of physical or chemical properties with varying degree of correlation with the parameter of interest, the mass concentration of airborne particles. Such indirect techniques are based on light scattering, light transmission, electric charge, flow resistance of filters, acoustic effects, thermal transfer, thermal emission, etc., as discussed above. The applicability of any of these indirect methods is limited to the measurement of aerosols within specific constraints of size, concentration, index of refraction, phase, composition, etc.

Light scattering, the most commonly used indirect method of measurement of suspended particulates, suffers from its inherent dependence on index of refraction and its extreme sensitivity to size characteristics. Nephelometry, single particle counting and lidar techniques, have shown only limited applicability to the problem of routine surveillance of airborne particulates, and although their fast response makes them valuable detection tools, for accurate and generally accepted mass concentration measurements, reliance is still placed on gravimetric determinations. This gravimetric technique is inherently incompatible with automation, continuous unattended operation, recording and data transmission. Furthermore, for ambient monitoring, filter weighing implies a logistics problem of daily removal of loaded filters, their replacement by clean ones and the initial and final weighing in addition to the storage and/or heating procedures required to reduce errors associated with water adsorption.

Methods based on the chemical evaluation of collected samples fulfill their specific purposes but are not useful as routine measurement techniques.

Two approaches appear at present as uniquely adapted to the measurement of the mass concentration of airborne particles: radioactive techniques and mechanical resonance. The latter method is based on the measurement of mass by the change of the natural resonance frequency of vibrating

mechanical systems. In practice, particles are collected on a resonating body, such as a taut wire (Gast, 1970)[44] or a quartz crystal (Olin, et al., 1971),[77] and the resulting mass increment is indicated by a decrease of the resonant frequency of the vibrating system.

In a comprehensive report to the Environmental Protection Agency, Sem, et al (1971)[1] evaluated the available methods for measuring particle mass concentrations and concluded that the method most near full development as a continuous and automatic stack sampling instrument was the beta absorption method. They noted that the piezoelectric crystal method was also very promising, although its development had not progressed as far. Besides these two "very promising" techniques, they listed a number as "promising," but needing considerable development: gravimetric, sensing of impact momentum through vibration, sensing of impact through flexible beam capacitance change. Several methods which did not measure particle mass were evaluated as having potential usefulness in certain situations: contact charging (Konitest), ion capture (a measure of surface area), and light transmission and scattering (to sense changes in effluxes, to be followed by mass concentration measurements). Sem, et al. (1971)[1] emphasized that the instruments that do not actually measure mass may give readings well correlated with mass concentration as long as the particle size distribution and composition do not change, but cannot be relied upon when these do change, and such instances often are of the greatest interest, as for example in the evaluation of a control device or a process change.

Piezoelectric Mass Sensing

The decrease in frequency of the resonant oscillation of a piezoelectric crystal when mass is added to the crystal has been the basis of a number of mass monitoring instruments, and some of the experience with such devices reported in the literature is reviewed here. Extremely high mass sensitivities can be achieved by this technique, in theory limited only by the stability of the resonator. Efficient and indiscriminate particle

collecting, as well as the requirement for subsequent particle removal, are inherent problems of this method whose complete solution has so far limited its range of applicability.

Chuan (1970)[27] built and tested a piezoelectric quartz crystal oscillator which he combined with an impactor to measure particle masses as small as 5×10^{-11} g.

A "piezoelectric microbalance" for aerosol mass determination was reported by Olin and Sem (1971).[77] They found it highly sensitive to mass in microgram amounts and greater and they gave the mathematical relationship for the sensitivity (frequency change per mass change). The conditions which they specified for accurate operation were:

1. The deposit should be thin in comparison with the crystal thickness.

2. The deposit should be uniform.

3. The force of adhesion between particle and surface (parallel to the surface) should be greater than the particle mass times the particle acceleration due to the vibrations of the crystal surface, and, for linearity

4. The change in frequency should be small in comparison with the resonant frequency of the clean crystal.

Olin, et al. (1971)[77] built and tested a piezoelectric sensor. They used it with an electrostatic sampling device to try to provide a uniform sample on the crystal face. Although they reported successful operation when sampling tobacco smoke and auto exhaust, they noted a number of problems:

1. In general, for humidities less than 25 percent relative humidity (r.h.), adhesion to the crystal was poor, resulting in artificially low concentration measurements.

2. For larger particles, sand which had diameters about 10 micrometers, adhesion was poor (at 25 percent r.h., the only value of relative humidity reported).

3. "Both the 1.5 and 5.0 MHz crystals stopped oscillating when the accumulated particle deposit reached about 400 micrograms."

4. Once the oscillations stopped, the crystal had to be cleaned, an operation reported to take a couple of minutes.

On the basis of their work, they concluded that the piezoelectric technique had a wide range of applications, including automobile exhaust evaluation and measurement of outdoor aerosols (for which cleaning was necessary after 50 to 100 micrograms of material had been collected), but as for the monitoring of source emissions, they concluded the method requires that "the sample is properly conditioned, perhaps by cooling and/or diluting." Of course, cooling introduces the problems associated with condensation, and diluting introduces, often, particle size biasing, as well as adding to the complexity of the instrumentation.

Carpenter and Brenchley (1972)[26] combined the size classifying abilities of a cascade impactor with the mass sensing of the piezoelectric crystal frequently-shift techniques. At a flow rate of 0.5 liter per minute, the four-stage device had particle aerodynamic size cutoffs at 18.9, 12.6, 6.3, and 2.5 micrometers; they did not indicate why these particular size cutoffs were chosen, so it is not clear whether the results for this instrument would be applicable to such an instrument with flow rate and/or slit dimensions tailored to the analysis of dust in the "respirable" range, which would involve cutoffs about a factor of five smaller. They used a series of circular-geometry jets at a jet spacing to jet diameter ratio of 0.375, which ratio was noted above as having been recommended by previous investigators of round jets. They had to calibrate the sensors on <u>each stage</u> separately, since the mass change to frequency change ratio is proportional to the mass sensing area of the crystal. The standard deviations for the calibration were 12 percent or less. Although Carpenter and Brenchley[26] did not present size distributions for their test aerosols, the particles used to

calibrate the device were atomized from a 0.1 percent uranine solutions, and experience with such atomizers indicates that most of the particles were smaller than 1 micrometer in diameter. Thus, although the size cutoffs tested were several micrometers and larger, these calibration tests indicated only the response to mass by the crystals, but not the ability or inability of particles larger than a few micrometers to adhere to the oscillating crystals.

In summary, although extremely sensitive, piezoelectric mass detection, the most important embodiment of the resonance frequency method, suffers from a number of operational difficulties that are more or less inherent in that technique: (1) incompatibility with prolonged continuous or continual operation (i.e., without crystal replacement, cleaning, rezeroing, etc.); (2) the need for intimate particle contact with the quartz crystal (problems with particle "bounce" or "levitation" above the collection surface due to the high-frequency crystal vibration); (3) the limited mass that can be collected before crystal oscillation is quenched; and (4) the appearance of occasional "glitches" or negative mass readings, as a result of internal crystal structure shifts or lattice reorientation.

Beta Radiation Absorption Mass Sensing

Radioactive techniques are, in general, based on the absorption or scattering of alpha, beta, or gamma radiation of airborne particles collected on a variety of substrates, by means of filtration, inertial or centrifugal separation, thermal or electrostatic precipitation, etc. Absorption of gamma radiation has not found any significant application to particulate detection mainly because of measurement insensitivity resulting from the high penetrating power of this type of radiation. The scattering of gamma rays, however, appears as a promising technique for the assessment of specific materials in dust mixtures, such as the determination of the relative proportions of carbon and rock dust in a

sample of coal mine dust (Martin and Stewart, 1968),[69] or the relative amounts of fly ash and carbon resulting from an incomplete combustion process (Dresia, et al., 1962).[36] The disadvantages of these gamma scattering techniques is again the requirement for large amounts of sample, between tens and hundreds of grams, due to the relatively weak interaction cross-section of gamma rays and matter.

Alpha emissions, helium nuclei produced by nuclear decay processes, have very weak penetrating power and are rapidly absorbed by matter. Furthermore, the absorption of alpha particles, which is intrinsically species dependent, is characterized by a step-like, sharply descending attenuation curve, restricting any practical application of this method to a narrow range of absorber mass per unit area. Nevertheless, an airborne dust monitor, utilizing a filter tape and an alpha source-detector configuration, has recently been awarded a U.S. patent (Babich, et al., 1971)[16] issued to five Soviet inventors. Whether such an instrument has any practical value remains to be determined.

Beta radiation, the nuclear emission of an electron as a result of the spontaneous radioactive conversion of a neutron into a proton, presents some unique properties of particular value to the measurement of collected aerosol particulates. Beta scattering has been utilized in applications similar to those of gamma scattering; i.e., the determination of fly ash/carbon ratios, or to ascertain the combustible versus incombustible fraction of coal mine dust (Martin and Stewart, 1968).[69] The main application of beta radiation in the field of airborne particulate pollution, however, is based on its absorption properties.

Beta absorption has been studied extensively in the past, and its application has ranged from gas densitometry to thickness gaging (Shumilovskii and Milttser, 1964;[85] Brownell, 1961;[24] Dempsey and Polishu, 1966).[33] A brief review of some basic and relevant concepts follows.

The electrons emitted by the beta process have energies ranging from zero to some well-defined value E_{max}. The governing absorption mechanism is dependent on the energy of the beta electrons. In their interaction with matter, beta particles are absorbed either by ionizing collisions or by radiative processes (e.g., bremsstrahlung). For low-energy betas such as those generated by ^{14}C, where ionization predominates as an absorption mechanism the attenuation of beta particles is a function of the electron density of the absorber. The electron density in matter can be expressed by the relationship:

$$\rho_e = \rho N_A \frac{Z}{M} \tag{12}$$

where ρ_e = the electron density of the absorber
ρ = the mass density of the absorber
N_A = Avogadro's number
Z = the atomic number of the absorber
M = the mass number of the absorber

From the above equation, it is apparent that for a constant Z/M ratio, the absorption of low-energy betas is only a function of the mass density.

Except for hydrogen (Z/M = 1), the ratio of atomic number to mass number for all other naturally occurring elements varies from about 0.4 to 0.5, and for most elements associated with airborne particulates, this ratio remains between narrower limits (0.45 to 0.5). Table 10 lists a few selected elements and compounds - typical of stack gas particulates - and their respective Z/M ratios. As a consequence the penetration of low-energy beta radiation depends almost exclusively on the area density (thickness times density) of the absorber and the maximum beta energy of the impinging electrons, and is essentially <u>independent of the chemical composition</u> of the absorbing matter (Lilienfeld and Doyle, 1973;[64] Horn, 1968;[2] Dresia, et al., 1964;[3] Nader and Allen, 1960;[4] Denzel and Horn, 1966;[5] Aurand and Bosch, 1967;[6] Benarie and Loverdo, 1967;[7] Lilienfeld,

1971,[8] Herling, 1971;[9] Izmailov, 1961;[10] Bulba and Silverman, 1965;[11] Lilienfeld and Dulchinos, 1971),[12] with the exception of hydrogen whose mass contribution to aerosol particles is vanishingly small.

Thus, Equation (12) can be expressed as

$$\rho_e \cong k\rho \tag{13}$$

and thus low-energy beta attenuation is essentially a function of the mass/area of absorbing matter.

As a beam of beta particles traverses a substance, the radiation flux is attenuated, following the exponential law

$$I = I_o \exp(-\mu_m \delta) \tag{14}$$

Table 10. Z/M RATIOS OF SELECTED ELEMENTS AND COMPOUNDS TYPICAL OF PARTICULATE EMISSIONS FROM COAL-FIRED STEAM POWER PLANTS

Element or Compound	Z/M
Calcium	0.499
Carbon	0.5
Oxygen	0.5
Silicon	0.498
Sodium	0.478
Potassium	0.486
SiO_2	0.499
Al_2O_3	0.490
Fe_2O_3	0.476
CaO	0.499
SO_3	0.499
MgO	0.496

where I_o = the radiation flux incident on the absorbing material

I = the transmitted particle flux

δ = the absorber mass per unit area

μ_m = the mass absorption coefficient defined by the approximate empirical relationship (Shumilovskii and Milttser, 1964)

$$\mu_m = 0.022\ E_{max}^{-4/3} \tag{15}$$

where E_{max} is the maximum beta energy of the isotope, in MeV.

Equation (15) indicates that the sensitivity of a measurement based on beta absorption increases with decreasing maximum energy. The choice of a specific radioactive isotope for beta absorption sensing is usually based on a compromise between measurement sensitivity requirements and the range or depth of penetration of the beta radiation. In addition, the half-life or decay constant, interfering presence of concomitant gamma radiation, as well as chemical and physical stability, cost and availability are important practical considerations bearing on the selection of radioactive isotope for a specific application.

The sensitivity of a beta-absorption measurement is limited by the random fluctuations of the rate at which beta particles are ejected from the atomic nucleus. As in any process subject to statistical errors, the sensitivity or resolution of a beta-attenuation measurement increases with the total number of events counted. Poisson statistics have been found to be applicable to nuclear decay processes. Thus, the standard deviation σ of a given beta count N can be expressed as:

$$\sigma = N^{-1/2} \tag{16}$$

By differentiation of Equation (14) with respect to δ, and replacing I by N, we find that

$$\Delta\delta = \frac{\Delta N}{N} \frac{1}{\mu_m} \tag{17}$$

which can be expressed as

$$\Delta\delta = \frac{\sigma}{\mu_m} = \frac{1}{\mu_m \sqrt{N}} \tag{18}$$

Where $\Delta\delta$ is the minimum detectable mass per unit area increment, or the one-sigma error of the beta attenuation measurement of δ.

The relative measurement error due to counting statistics, E_r can be obtained from Equations (14) and (18)

$$E_r = \frac{\Delta\delta}{\delta} = \frac{1}{\mu_m \ \delta \sqrt{N}} = \frac{e^{(1/2)\mu_m \delta}}{\mu_m \ \delta \sqrt{N_o}} \tag{19}$$

E_r has a minimum when $\mu_m \ \delta = 2$, which defines the condition for obtaining the minimum relative statistical error; i.e., the maximum signal-to-noise ratio in a beta sensing system (Lilienfeld, 1971).[8] Since statistical errors usually predominate in instrumentation based on beta-attenuation measurements, the above derived criterion provides a practical design guideline for the choice of the radioactive isotope (μ_m) and the collection substrate (δ).

The detected beta count N is equivalent to the product of the average beta rate f and the counting time τ. For a dust sampling system, the two-sigma error limit (95 percent confidence of a given measurement) of the measured mass concentration can be obtained from Equation (18) as

$$C_{min(2\sigma)} = \frac{2A}{\mu_m \ Qt \sqrt{N}} = \frac{2A}{\mu_m \ Qt \sqrt{\tau f}} \tag{20}$$

where A is the collection area, Q is the volumetric flow rate, and t is the dust sampling time. Equation (20) can be expressed in terms of the flow velocity v at the collection site as:

$$C_{min(2\sigma)} = \frac{2}{\mu_m \, vt \sqrt{\tau f}} \tag{21}$$

Equation (21) is applicable for step-like particulate sampling; i.e., a continual cyclic operation wherein each cycle is composed of an initial beta counting period τ, followed by a particulate sampling period t, which in turn is followed by another, final beta counting period τ.

For a collection-detection configuration utilizing a continuously advancing substrate, Equation (21) becomes (Lilienfeld, 1971):[8]

$$C_{min(2\sigma)} = \frac{2 \, sb}{\mu_m \, Q \sqrt{2 \, \tau_r f}} \tag{22}$$

where s = the substrate transport velocity

b = the width of collection area

τ_r = the time constant of the averaging circuit of the beta pulse rate sensing circuit

The selection of the radioactive isotope to be used for a given application is based on a compromise between measurement sensitivity and beta-penetration range. Measurement sensitivity indicates the need for a large value of the μ_m, the absorption coefficient, thus a low-beta energy. Low energy, however, implies reduced range or penetration. The inevitable additive presence of source self-absorption, detector window, air gap, and collection substrate absorption dictate a minimum value for the range of the order of 5 to 10 mg/cm^2. As a result, the use of such low-energy beta emitters, as nickel-63 is usually eliminated. The most commonly selected isotope is

carbon-14 whose properties are particularly compatible with particulate mass sensing. It has a maximum beta energy of 0.156 MeV and decays into a stable nuclide (^{14}N). An important consideration is the half-life of the isotope, which should be long as compared with typical utilization periods of the order of 10 years. ^{14}C with a half-life of about 5700 years, is ideally suited for this purpose, obviating periodic adjustments or routine source replacement. Other favorable characteristics of ^{14}C are handling safety, relative freedom from licensing requirements, price, and availability.

GENERAL CONCLUSIONS

The conclusions reached as a result of the foregoing literature review will now be summarized, and a resulting instrumental concept will be outlined incorporating the design and operational guidelines based on those conclusions.

Reviewing the objective, the fundamental purpose is to evolve a technique capable of representatively assessing the particle size distribution by mass of particulates in effluent stream, and to perform such a measurement automatically with a recorded output. The following combination of techniques is recommended as a result of the review of the present state-of-the-art.

- The collection of particulates should be performed by means of inertial impaction.
- Size segregation of particulates should be performed by means of series or cascade impaction.
- Round jet impaction is to be preferred because of superior size selectivity and compatibility with mass sensing techniques.
- Mass sensing of the particulates collected by impaction should be performed by beta-radiation attenuation.

A size-selective aerosol monitor, however, faces a difficult challenge when used for in-stack monitoring. Temperatures significantly higher

than room temperature, fluctuations in flow velocity and particle concentration, as well as spatial inhomogeneities of both these quantities, combine with moisture and corrosive gas to present an inhospitable environment for accurate determination of particle mass concentration as a function of aerodynamic diameter. Any design of such an instrument should take these conditions into consideration.

As a result of their thorough investigation into the question of "particle sizing techniques for control device evaluation," Bird, et al. (1973)[21] concluded that inertial separation devices covering the range from 0.2 to 5 micrometers and used in conjunction with sensitive mass concentration sensors were the best candidates for such application. Their conclusions, however, also include the statement: "Based on simultaneous size determination with the in-stack and out-of-the-stack sampling arrangements, it seems almost certain that a signififant quantity of particles are lost in the probe and sampling lines, particularly in sizes larger than about 2 μm."

Thus, in addition to the specific techniques listed above the following important conclusion is reached with respect to the location of the particulate collector-sensor: for representative mass concentration measurements and especially to size the aerosol by mass (i.e., mass versus aerodynamic diameter), the extraction of the sample flow through ducts (probes) for collection and measurement at typical distances of several meters from the sampler inlet is unacceptable because of largely uncontrollable line losses and alteration of the original size distribution.

In conclusion, there is a consensus that it is desirable to measure particulates from source emissions with a device that discriminates particle size on the basis of aerodynamic diameter and measures particle mass concentration. The most promising approach to these goals is an in-stack device based on impaction to achieve size discrimination and using beta absorption to give mass concentration readings automatically and in a

form compatible with convenient data recording, transmission, and analysis. Such an instrument would provide an extremely valuable tool for the quantitative assessment and evaluation of emission control measures and devices under a variety of conditions, and would lead to their full characterization and eventual optimization.

SECTION V

INSTRUMENT DEVELOPMENT

Based on the conclusions reached within the preceding Literature Review, an instrument concept was evolved incorporating the basic principles of inertial size segregation by impaction, mass sensing by beta radiation attenuation, and direct sampling from the stack environment. The design, development, fabrication and testing phases of a prototype instrument are described in the following sections of this document.

OVERALL DESCRIPTION

The multi-stage in-stack particulate mass monitor system described in this report consists of the following:

1. A cascade seven-stage modular collector-sensor section
2. A support and substrate driving structure
3. Electronic control and recording console
4. Pump.

The first section consists of seven modular impaction-sensing assemblies each of which contains a circular nozzle jet impaction stage, a thin foil-film moving substrate cartridge, and two beta radiation source-detector pairs, one of which serving as a reference and the other sensing the collected mass.

The second element of the system consists of a support member for the collection-detection head, and it contains the stepping motors gears and couplings to drive the substrates at all the collection stages.

The console contains all electronic circuitry required for signal processing and conditioning, the multichannel strip chart recorder, the substrate stepping motor drive circuitry, and the power supplies.

The pump originally contemplated during the development effort consisted of a small air-ejector driven by a compressor. Actual laboratory tests, however were performed with a rotary vane pump.

The principle of operation for the instrument can be described as follows. Particles entering the collection-detection inlet nozzle are collected on successive cascaded impaction stages for size segregation. Particles are collected at each stage by impaction on a adhesive-coated continuously advancing substrate consisting of a thin film. The resulting collection is thus a trace or band whose width is approximately equal to each of the impaction orifice nozzles. The collection density of this trace clearly depends on three principal parameters: the mass concentration of the particulate size fraction collected at a given stage, the width of the trace, and the rate of substrate advance. Mass sensing is performed by means of beta radiation at each stage using one source detector-pair to sense the beta transmission of the clean substrate before it passes under the impaction nozzle, and another source-detector pair to sense the beta transmission thourgh the soiled portion of the substrate; i.e., after passing under the impaction nozzle.

The pulse train signals from each detector of each of the seven stages are fed to the control console by means of individual coaxial cables and each pair of signals (i.e., from each stage) is processed to provide a signal proportional to the particulate concentration at each sizing stage. These signals are continuously recorded on the strip chart recorder; one trace for each collection-sensing stage.

MECHANICAL DESIGN

Design Criteria for Impaction Stages

From the Literature Review study (see preceding section of this report) evolved within this program the design of the impaction stages was based on the following criteria:

- impactor throat length = jet diameter
- impactor jet-to-plate distance = 1/2 jet diameter
- impactor jet cross section, circular.

These criteria were obtained from the exhaustive impactor study performed by Marple (see Marple 1970 of above Literature Review). The additional recommendation for a Reynolds number of approximately 3000 could only be adhered to within the first three stages of the cascade impactor. In general this latter criterion can only be applied in a very limited manner to cascade impactors because of the common flow rate of all stages. Nevertheless, the highest Reynolds numbers only exist at the last stages where smaller particles are involved and where reentrainment was thus less likely to occur.

Design of Collection-Detection Head

Since the collection-detection in-stack head constituted a centrally important element of the measuring system especially careful attention was given to these design details in order to optimize the operation, reliability and provide adequate operational flexibility within the limitations imposed by dimensional and environmental constraints. The design of the substrate advance mechanism was particularly critical and several alternative variations were carefully considered. The design of the foil advance mechanism was modified somewhat with respect to the originally considered approach, in order to provide a more efficient use of the entire substrate width (38 mm).

This approach consisted of the incorporation of a lateral displacement feature whereby when the substrate film reaches one end the entire cassette would move forward and the foil is then transported in the opposite direction. This arrangement permited six dust traces to be collected on one strip of foil before it had to be cleaned or replaced. This mechanism requires three drive shafts which are coupled to each of the stages. In practical operation each of these cassettes is inserted completely into each stage compartment and then slowly and automatically moves back such that when the operator removes these cassettes at the end of a measurement run, they are all on the near side of their insertion opening. Various operational difficulties precluded the actual use of this lateral motion feature during the final testing progress and only unidirectional substrate translation was used during these tests.

A Mesur-Matic stepping motor was driven by a programmable circuit which provides a predetermined number of pulses to the stepping motor, at a selected rate. At the completion of the preselected number of pulses, the direction of the motor is automatically reversed. Translational motion of the cassette occurs at the same time by means of a separate stepping motor. At the completion of five parallel collection traces the driving circuit automatically stops the stepping motor. An electromechanical pulse counter provides running information on the length of substrate that has been transported, thus permitting the interuption of a run, and its subsequent resumption, if so desired, without changing the substrate cassettes before the end of the normal substrate excursion.

Figure 9 depicts the collection-detection head assembly in the 90° folded position to be used for typical vertical stack sampling. This picture shows the seven-stage head without the cover plate, and without the inlet nozzle. The detector cables are not plugged in.

Figure 10 shows separately one of the modular stages (side view) with the inlet side of the conical impaction nozzle at the top, and the substrate transport cassette at the bottom.

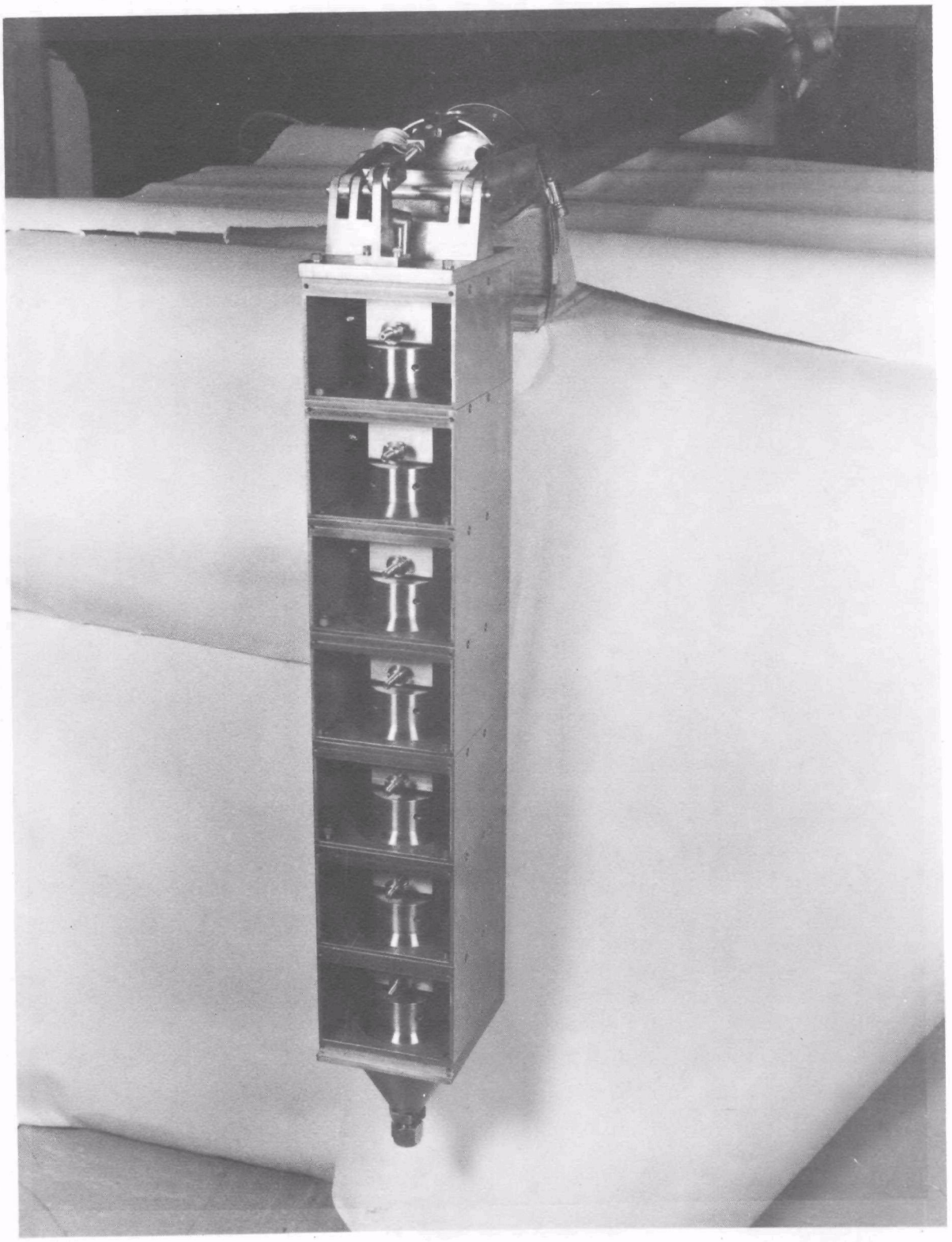

Figure 9. Assembled seven-stage collector-sensor

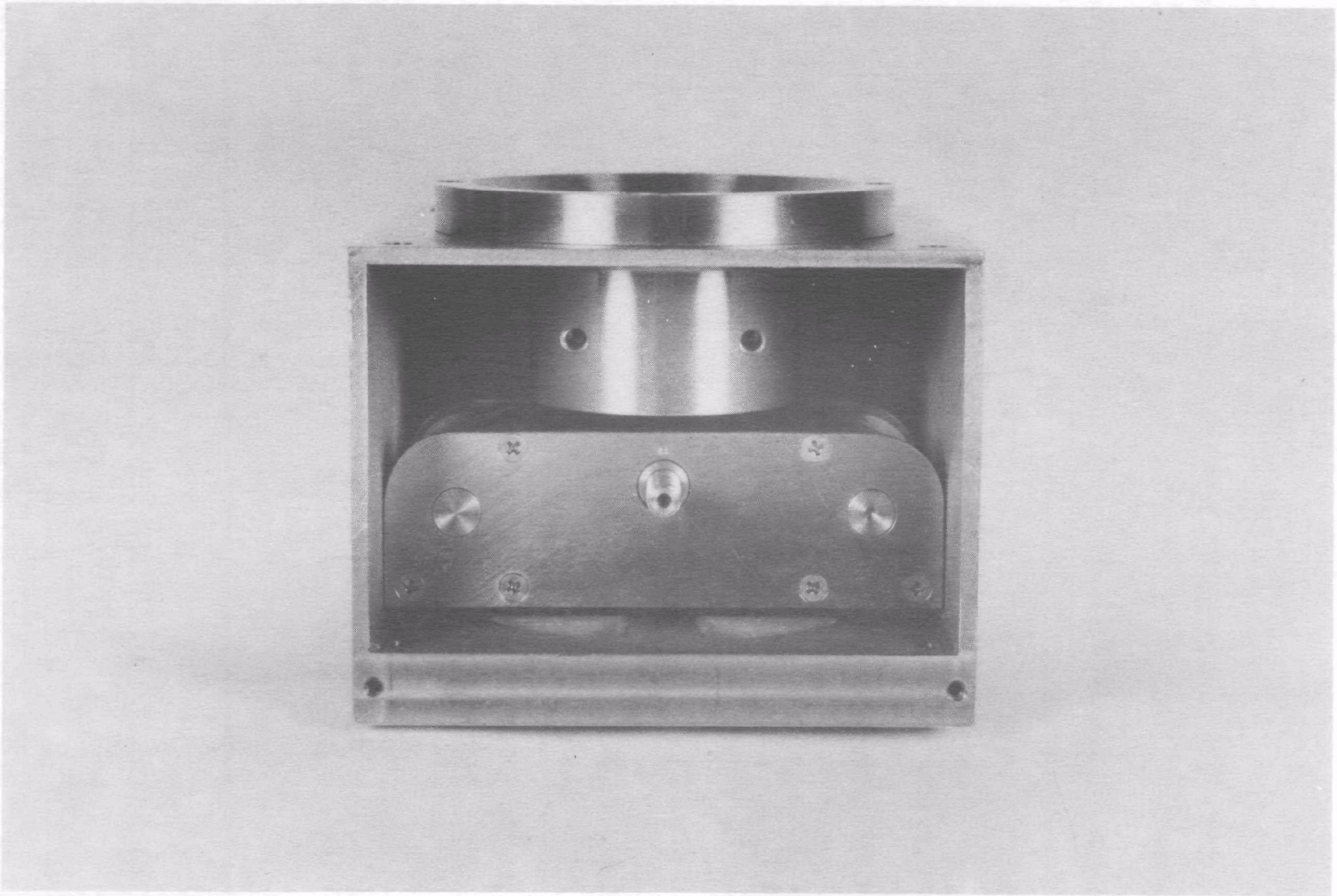

Figure 10. Single modular impaction-cassette assembly

Figure 11 depicts three sections of the system: at the left, the inlet section; at the center, one of the modular stages (view from inlet end) showing the three drive shaft interlocks, the central one for the lateral cassette translation, and the two side ones ofr the normal substrate transport, one for each direction of motion; and at right, a loaded cassette with the stainless steel foil substrate.

Figure 12 shows a detail of the articulated interface between the support probe and the collection-detection head.

IMPACTION SUBSTRATE ASPECTS

Two principal aspects of impaction were investigated during this development program: the substrate material; i.e., the foil or film on which collection was performed, and the coating to be applied to ensure particle retention. The substrate film had to fulfill the following conditions: compatibility with high temperature operation (i.e., up to 260°C if possible); mechanical strength and flexibility compatible with continuous motion and transport; and sufficiently low mass per unit area to permit a transmission of at least 25 percent of the impinging radiation from the selected Carbon-14 source isotope.

The following were considered for the selection of a suitable collection-impaction tape substrate material: teflon filter medium (Millipore), ceramic paper, and metallic foils. Both commercially available teflon and ceramic paper tapes were partially acceptable, their common disadvantage being their excessive thickness resulting in excessive beta attenuation, and reduced useful tape length per roll. Metallic films (e.g., stainless steel) appeared quite promising and although their requirement for adhesive coating and cost considerations are somewhat negative characteristics, the initial selection was a stainless steel film with a 5 μm thickness corresponding to a mass/area of about 4 mg/cm^2 which resulted in a Carbon-14 beta transmission of the order of 35 percent (i.e., 65 percent attenuation). For reasons of operational convenience, however, during the laboratory tests performed around room temperature (see Section VI of this report) mylar substrate films were used.

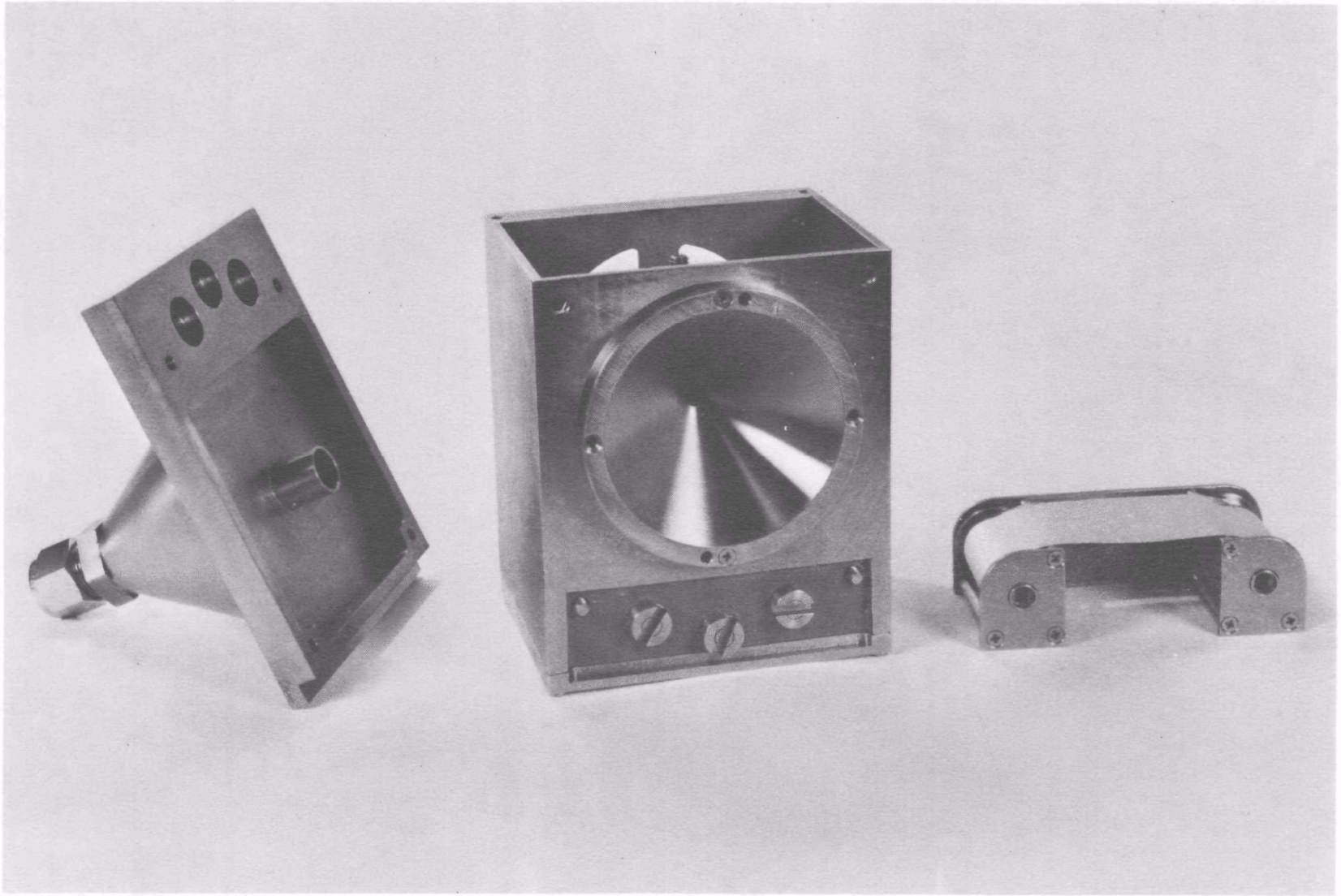

Figure 11. Cassette, impaction nozzle and collector inlet sections

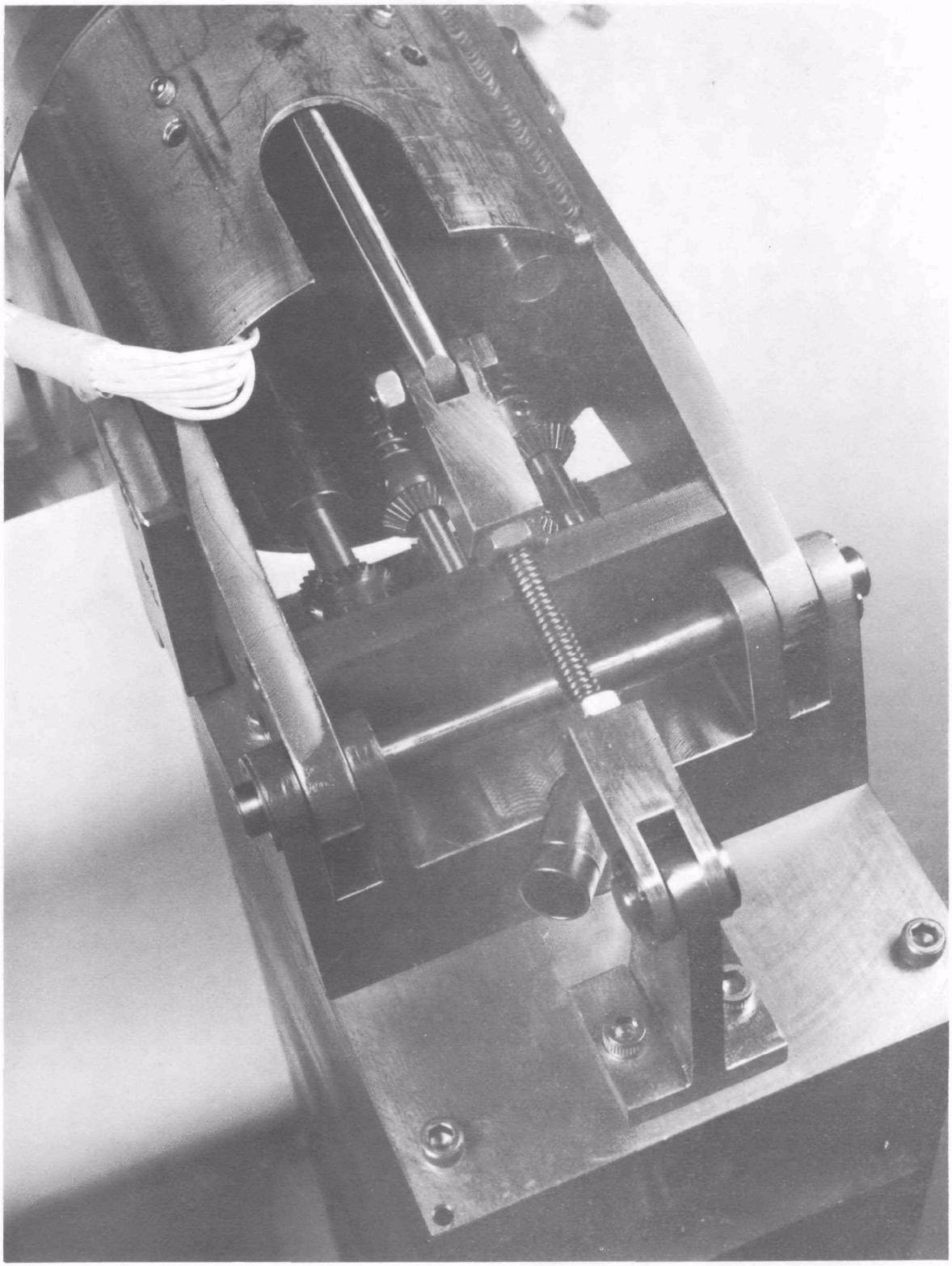

Figure 12. Substrate drive and 90° rotation mechanisms

Observations at GCA have indicated that the interaction between the impacting particles and the substrate adhesive coating is more complex than usually assumed. The retention of particles by actual inelastic penetration into the coating probably plays only a secondary or partially controlling role, since the depth of penetration into a coating even as fluid as vaseline, at the velocities to be considered in this application are considerably less than the particle diameter, thus precluding the collection of further dust, after a monolayer had been deposited. Since this is obviously not the case in most situations of this type a different mechanism must predominate to retain the particles impacting on a viscous surface. Experimental observations at GCA have indeed confirmed the presence of such a mechanism: capillary migration of the fluid substrate, or particle "wetting." This phenomenon gives rise to an upward migration of the viscous fluid substrate tending to provide a thin sheath of adhesive above the particulates as they are collected. The upward capillary motion or the wetting rate, is a function of a number of variables, such as viscosity, surface tension and thickness of the surface coating, and to a certain extent depends on particle characteristics such as size, and surface properties. The controlling particle retention criterion, that emerges from this mechanism is that capillary migration rate be equal or exceed the rate of particle deposition in order to maintain a wet or adhesive upper layer. This criterion provides a high limit for the coating viscosity. At the other extreme, if the viscosity becomes too low, the dynamic pressure exerted by the air jet results in a net outflow of the material radially outwards from the axis jet; i.e., cratering of the adhesive coating ensues.

For room temperature conditions, such mixtures as petroleum jelly and paraffin oil (3/1 ratio) appears to provide the adequate combination of viscosity and surface tension for the collection of most particulates. At higher temperatures (> 40°C) however, that type of coating becomes totally fluid; i.e., the viscosity and surface tension decrease drastically resulting in the above mentioned radially outward displacement of the coating, especially at jet velocities in excess of about 30 or 40 meters per second.

Within this program various substrate coatings were investigated using a GCA respirable dust monitor, a device which employs impaction for dust collection and beta attenuation for mass sensing. Normally, this instrument is operated with a 3/1 petroleum jelly to paraffin oil coating. Comparisons were made between two instruments, one operated with the usual coating, the other operated with various other substrate coatings. Texaco high temperature grease, with or without a small amount (less than 10 percent by weight) of motor oil added to lower viscosity, and which was applied to the mlyar substrate by solutionizing with benzene which evaporates leaving a uniform coating, gave results as good as the usual coating. Unfortunately, temperature challenge showed severe oxidation at 500°F, and some evidence of lateral flow with weight loss at 400°F to an extent that precluded its use at these temperatures. Tests with mixtures of Dow silicone oil (e.g., 100 centistoke) and Dow High Vacuum Grease gave results almost as good as the normal petroleum jelly/paraffin oil mixture at room temperature. It is felt that refinement of the exact mixing ratio (around 1:1) and improvements in application to ensure homogeneous coating should provide good results. Temperature challenge to 500°F showed no evidence of lateral flow with less than 1 percent weight loss after 30 minutes indicating its potential usefulness for high temperature use.

It should be mentioned that Dow High Vacuum Grease by itself can be used as an impaction substrate coating only for light particle loadings and that the addition of the silicone oil is necessary to lower the viscosity sufficiently to allow wetting for heavier particle loadings.

PUMP SELECTION AND FLOW CONTROL ASPECTS

The problem of condensation of low boiling point gaseous compounds extracted from the stack effluent at elevated temperatures that are exposed to a significant decrease in temperature before reaching the pump, had to be considered. One possible solution was based on maintaining the temperature of the gas emerging from the support probe above the condensation point of most of such condensibles; e.g., 120 to 150°C by means of a heated duct

upstream of the pump and by using a pump impervious to temperatures of up to about 200°C. This approach would have required the use of a metal bellows type flexible duct from the exit of the support probe to the pump inlet, wrapped with an electric heating tape, and the pump required for this application would have been a high temperature welded bellows positive pressure pump which uses stainless steel valves with teflon gaskets capable of operation up to about 230°C, and commercially available.

An alternative solution to the high temperature duct-pump was pursued and adopted for this program. This method consists of using an air ejector powered by a small compressor (or high pressure supply if available at the test site). This air ejector can be mounted directly on the exhaust of the support probe emerging from the stack. A high pressure air line from the compressor provides the flow to operate the air ejector, whose exhaust can be ducted away or conceivably back into the stack. Two air ejectors manufactured by Air Vac Engineering Co., Inc., Milford, Connecticut were evaluated (Models TD-260 and AV-191) and both were found to be capable of providing the required suction flow rate and vacuum for this application, of about 55 kN/m^2 absolute pressure (14 in Hg, or 16 in Hg vacuum) and 300 cm^3/sec (18 liters/min). Air ejector model AV-191 required a supply flow of 2.12×10^{-3} m^3/sec (4.5 scfm) at 310 kN/m^2 (45 psig), model TD-260 required 3.8×10^{-3} m^3/sec (8 scfm) at the same pressure. Thus the former was found to be more efficient for this application.

The above outlined method to obtain the necessary sampling flowrate through the system had the notable advantage that the hot gases sampled are not brought in contact with any moving parts and no deterioration of the flow system is thus to be expected. Another advantage of this approach is its lower cost than the metal bellows pump solution.

The two air ejectors mentioned above were tested in combination with a small Sears air compressor acquired on this program. It was found that the Model AV-191 ejector provided the flow-vacuum regime of 18 liters/min at about 16 in Hg vacuum estimated to be required for the in-stack system (at standard temperature and pressure), with the Sears compressor.

Flow rate control was to be achieved by operating the last impaction stage under critical (i.e., Mach 1) conditions. It was considered that this relatively high jet velocity would not result in significant particle bounce at that stage because of the small particle dimensions of the fraction remaining after passage through the preceding six stages.

The use of critical or sonic flow conditions to maintain a constant flow was discussed within the preceding Literature Review section.

BETA RADIATION SOURCES

The preliminary selection of the radioactive isotope to be used as beta radiation source for this instrument was made within the Literature Review (Section IV of this document). The use of Carbon-14 within the present application presented a number of advantages over other beta emitters and the only question remaining before a final selection could be made was the aspect of high temperature compatibility.

Special 100 microcurie carbon-14 beta radiation sources were prepared for this program by New England Nuclear, North Billerica, Massachusetts using high temperature epoxy, polyimide kapton, cured under vacuum at about 150°C. This latter technique is required to prevent trapping air within the sealed source and the concomitant problem associated with expansion of that gas in a high temperature environment.

The first two sources so manufactured were tested by placing them in an oven and bringing the temperature up to an initial 240°C, after which they were left in the oven for over 48 hours, by which time the temperature had drifted up to 270°C. The beta output was then compared to the pre-bake level with the result that the count rate had varied less than 2 percent between the two conditions.

Subsequently, fifteen sources of similar design were temperature challenged up to 260°C. Prior to the temperature testing, a careful microscope

examination of the sealing window covering the radioactive material was made so that any thermo-mechanical stresses or construction imperfections could be later ascertained. No change in physical appearance was seen under the microscope. Leakage tests were negative confirming that the temperature cycling had not degraded the physical integrity of these sources. Fast temperature rate of change (about 60°C/min), which would tend to provoke thermal stress damage, was used to exaggerate anticipated operating conditions where the large mass of the impactor would result in lower temperature change rate.

One source was tested to destruction to determine maximum operating temperature. At a temperature of 400°C (750°F) the source was destroyed, that is, severe C-14 leakage was observed.

The beta sources were physically incorporated at the end of small stainless steel rod whose dimensions are: length, 25 mm; and diameter, 2 mm. The active source area at one end of this rod has a diameter of approximately 1 mm.

BETA RADIATION DETECTION

The problem of sensing beta radiation within the above described multi-stage collector-sensor system at elevated temperatures proved to be insurmountable within this development program, at least insofar as a stable, long-term, reliable detector operation could not be achieved at temperatures approaching 200°C (400°F). Some degradation was observed even at lower temperatures.

Based on verbal information provided by a manufacturer* it was assumed, at the inception of this program, that the manufacture of geiger-müller detectors for low energy beta radiation detection capable of operation at 260°C was well within the state-of-the-art. This proved not to be the case.

---

*LND, Inc., Oceanside, New York.

End-window miniature geiger detectors especially designed by LND were subjected to high temperature testing at GCA to determine their ability to withstand the required environment of up to 260°C (500°F). Sixteen detectors of this type were placed in an oven after establishing their room temperature operating performance with a standard source test configuration. The temperature rise and fall were carefully controlled in order not to exceed a temperature rate of change of about 5°C/min and thus not to impose excessive differential expansion (or contraction) stresses on the various bonding surfaces of the detectors.

The results of these tests were discouraging. All detectors exhibited significant decreases in the plateau voltage (i.e., the operating voltage range) and significant increases in the count rates even when the applied voltage was reduced to accommodate for the decreased plateau level. After several high temperature test cycles the plateau voltages had fallen typically from central values of 750V down to 500V with count rate increases of as much as 50 percent. Such changes were obviously unacceptable and furthermore implied a serious gradual deterioration of the detectors leading to their complete breakdown, which was actually observed in two of the units at the completion of this test series.

The manufacturer of the geiger detectors was contacted and following a visit to GCA by one of their principals, the detectors were returned to the factory. LND promised to resolve the problem and once more supply GCA with improved detectors. The problem of detector degradation appeared to be associated with the gradual depletion of the halogen quenching component of the gas filling, due to surface absorption to the cathode as well as to the insulation material separating the two electrodes. A possible solution to this problem appeared to be appropriate surface treatment of these absorbing areas by careful decontamination, vacuum treatment, passivation and other methods.

Another manufacturer claiming to have developed high temperature geiger tubes was contacted (Harshaw Chemical Co., Solon, Ohio) in order to search for an alternative source for such devices.

After the detectors were returned to the manufacturer (LND) and following a rather lengthy waiting period, several detectors were received and tested up to 200°C, a few of these appeared to withstand that temperature at least for a few hours, while the majority of them, however, exhibited rapid failure modes similar to those observed during the initial tests. Several months had been lost in this fruitless effort and the decision was reached to abandon the approach of using self-quenching geiger tubes for this high temperature application (no progress could be made with alternate manufacturers). As mentioned above, the problem of high temperature induced degradation of these devices was obviously associated with the decomposition, adsorption, and gradual depletion of the halogen quenching gas additive used in these tubes to achieve rapid ion recombination after a beta pulse is generated enabling the detector to sense a subsequent beta event. This halogen quenching gas has a very long lifetime at, and around, room temperature, but apparently reacts with the inner tube surfaces at elevated temperatures, with the concomitant inability of the tube to restore itself after each beta pulse.

Various alternative approaches were considered; among these the most interesting were: (1) scintillation detection in the high temperature environment, with light signal transmission to the stack exterior by means of fiber optics, and detection by individual photo-multiplier tubes; and (2) use of geiger detectors without internal quenching agent, using external electronic pulse quenching. This latter approach appeared more promising and feasible than the scintillator method which entailed a quantum jump in system complexity and cost.

Electronic quenching of geiger detectors is aimed at extinguishing the gaseous discharge, resulting from each detected beta event, by rapidly interrupting the high voltage applied to the tube, followed by a rapid recovery of that potential to enable the tube to detect a subsequent event. The total time required from the initiation of the first pulse until a second one can be detected by the tube is called the dead time, which is always slightly less than the actual resolving time, which incorporates

the delay caused by constraints imposed by the electronic triggering circuit.[93] Electronic, or external, quenching had been applied in the recent past mainly to shorten the dead time of detectors already using self-quenching gases and to extend their lifetime.[94,95] Plateau slope and length improvements have been reported as a result of such circuits.[96] One specific application, however, was found in the literature[97] wherein a geiger-type tube was developed for operation at elevated temperatures (as high as 540°C or 1000°F) using external or electronic quenching without an internal quenching additive. The quenching circuit used with that device was obtained from the General Electric Co.[98] The above described device, however, operated with dead times of about 1 ms, about 20 times longer than the dead time required for the in-stack analyzer. It was decided to attempt to utilize the general approach of the G.E. circuit for the present application, but to modify it in order to achieve a reduction in the dead time, to permit operation with a lengthy coaxial cable required between the in-stack head and the control console, and to replace some of the outdated components of the original circuit with better ones from the point of view of speed of signal processing, cost and packaging simplicity. Several circuit versions were developed in order to optimize the operation of non-selfquenching geiger tubes. Several of these detectors were obtained from a local source,* and an extensive series of tests was performed with different variations of circuitry and detector design.

The problem of transferring the detected pulse from the tube to the circuit and to return the quenching pulse from the circuit to the detector through a length of coaxial cable interconnecting these elements without excessive time response degradation had to be resolved as the circuit was being developed. It appeared that a successful solution to that problem is obtained by subdividing the high resistance detector anode resistor (total of about 10 M ohm) into two elements, one connected directly to the anode and the other at the high voltage power supply output.

---

*TGM, Inc., Waltham, Massachusetts.

Operating at room temperature and by proper selection of circuit components, operating high voltage, high voltage pulse downward excursion amplitude, etc., detection dead times of 45 to 50 μs were obtained routinely, values that are essentially equal or better than the self-quenched tube dead-time, using a miniature geiger detector without the halogen gas additive, supplied by TGM. This organization supplied GCA with several miniature tubes filled with the usual noble gas mixture (argon and neon) at different pressures ranging from 8000 to 53,000 N/m^2 (60 to 400 torr) at room temperature. The higher pressure filled tubes provided the more reliable and faster operation at room temperature, however, 400 torr is approximately the highest permissible pressure at room temperature because it entails a pressure of about 710 torr at the maximum stack temperature of $260^{\circ}C$. The tube internal pressure must remain below or exceed only very slightly the outside pressure in order to prevent window rupture.

These detectors, without halogen quenching gas additive, were temperature tested up to $400^{\circ}F$ under actual operation with the external quenching circuit mentioned above. These tubes appeared to operate well only for a short period of time (1 to 2 hours) after which they failed irreversibly by exhibiting completely unstable operation. This behavior was quite similar to that observed with the self-quenching type of tubes previously tested and rejected.

After a series of in-depth discussions with the supplier of these detectors it was concluded that these "quenchless" tubes may have had trace amounts of unwanted quenching gas as a result of the manner in which they had been fabricated and that the circuit developed for their quenching relied on the presence of this spurious contamination. Once this trace amount was depleted by heating the tubes ceased to operate.

A new batch of detectors was made by TGM taking special care in insuring gas purity. These detectors were filled with pure neon. Upon receipt of these new tubes it was found that the quenching circuit was totally inoperative, confirming the hypothesis that the initial batch of tubes contributed their own quenching to the circuit operation. It was determined

that one of the problems was that a beta event which occurred during the voltage reapplication period (following an initial beta event) could initiate a discharge but would not be detected by the cricuit and would thus not be quenched leaving the tube in a continuous discharge condition. The reason for this oversight in the design of the circuit was that the tubes with which the circuit were made to work had some self-quenching properties due to residual quench gas, as mentioned above. Furthermore, it was found that the inherent dead time of the circuit was about 1 millisecond when not accelerated by intrinsic detector self-quenching and limited to such long dead times when used in combination with a significant cable capacitance (about 200 pF) required to interconnect the tube with the electronic circuitry.

To achieve both rapid quenching response as well as to prevent the possibility of "latching on" when two beta events follow each other within the system dead time a completely redesigned circuit was gradually evolved (see Figure 13). Typical dead times of 70 microseconds were obtained under operating conditions with this circuit. Several versions of the quenchless type geiger detector were made by TGM and tested. The tubes exhibiting the most reliable operation were constructed by following a series of steps whose objective was to minimize contamination of the filling gas and the internal surfaces. After the parts; i.e., electrodes, ceramic insulator, mica window, etc., were cleaned, they were assembled in air at elevated temperature. The electrodes, which are 20 percent chromium-iron, become oxidized thereby providing a satisfactory surface for the gas-metal sealing bond. An additional processing step added in these tubes is a low pressure ion bombardment to remove this oxide after assembly. Ordinarily in self-quenched halogen tubes, the oxide is not removed so as to passivate the electrode surfaces thereby inhibiting chemical depletion of the quenching gas. The tubes made for GCA were cleaned by ion sputtering after which they were baked out at 350°C for 1-1/2 hours under vacuum and then filled from a pre-mixed cylinder with a mixture of neon and 0.5 percent argon after which they were sealed.

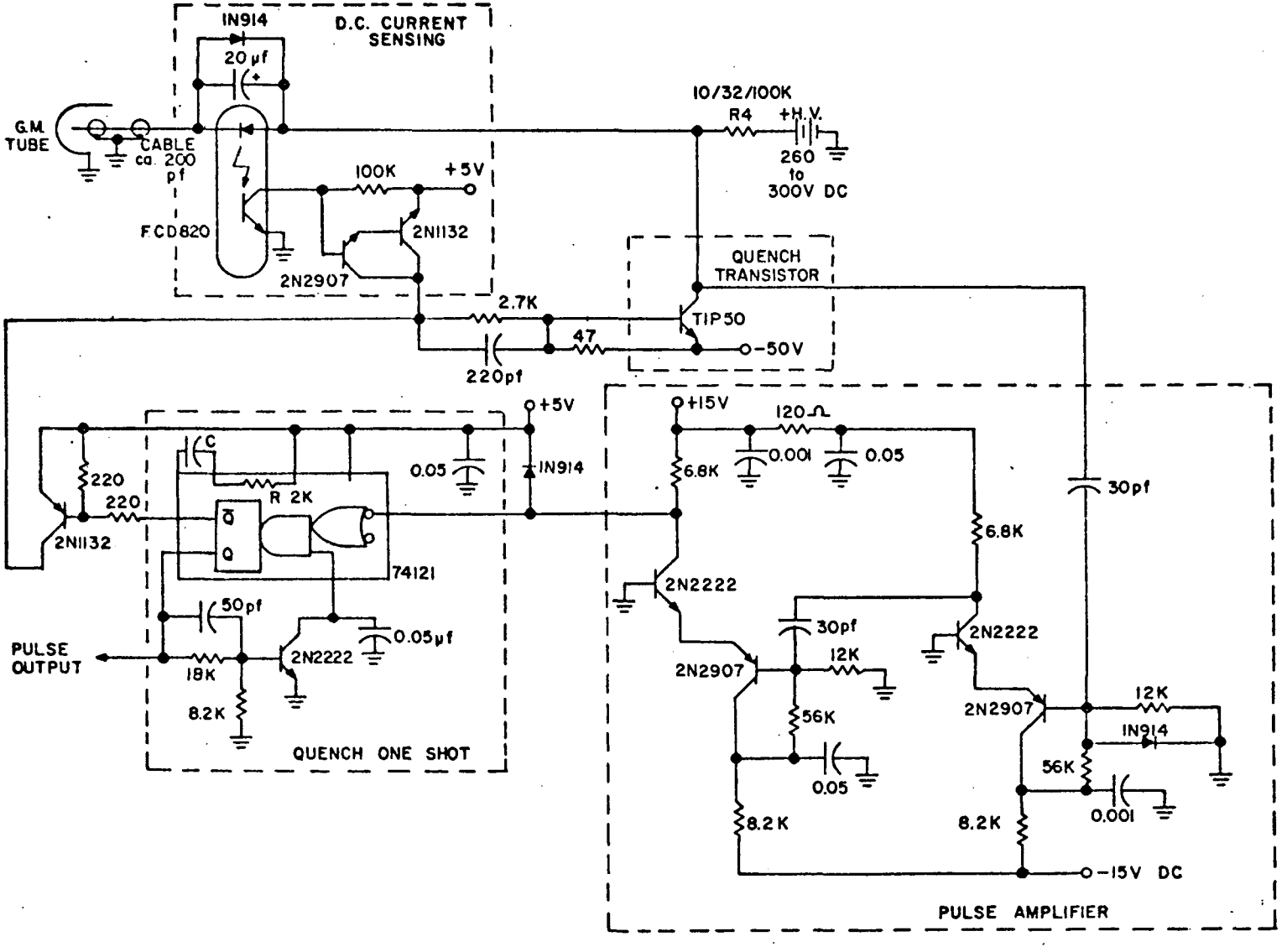

Figure 13. Experimental quench circuit (first version)

A series of tests were performed to determine the behavior of these specially constructed detectors in conjunction with the experimental circuit described above, which afforded the functional flexibility required to optimize the operation of these tubes.

The main test series consisted of a number of 2-hour heating cycles such that the tube under test would be taken alternatively from room temperature up to 400°F and down again after 2 hours, permitting it to cool off again after which the cycle was repeated. This test was continued for a total of 32 hours of which about 20 hours were at the elevated temperature of 400°F. Although the tubes under test exhibited a slight change in the operating voltage range (from an initial range or platteau of 280 to 330 volts to a final one of 250 to 295 volts), these tests indicated that the tubes under scrutiny were not "perfect" and that a finite lifetime could be foreseen. Furthermore, the "survival" of these detectors under cyclic temperature conditions appeared to depend on their continuous electrical operation; i.e., these tubes had to be run continuously to preserve their viability.

Subsequently several advances were made in the design of the electronic quenching circuit providing both much improved circuit performance and reduced component count. The circuit resulting from this development (see Figure 14) demonstrates that all tubes which operate properly as counters also work well as relaxation oscillators at moderate (0.5 mA) currents so that considerable circuit simplification can be achieved. This oscillation eliminates the need for a d.c. current sense as it will retrigger the monostable if the tube does not quench properly.

The input transistor, Q3, is run with grounded base with an emitter current of 0.27 mA to provide 95 ohm termination to the cable to which the tube is connected. This stage provides a voltage gain of about 30. Q2 and Q3, operating as emitter followers, provide the current required to drive the emitter of Q4 (about 700 mA). The circuit is essentially a one-shot with an input sensitivity of about -20 mv, and an output fall time of less than 200 ns.

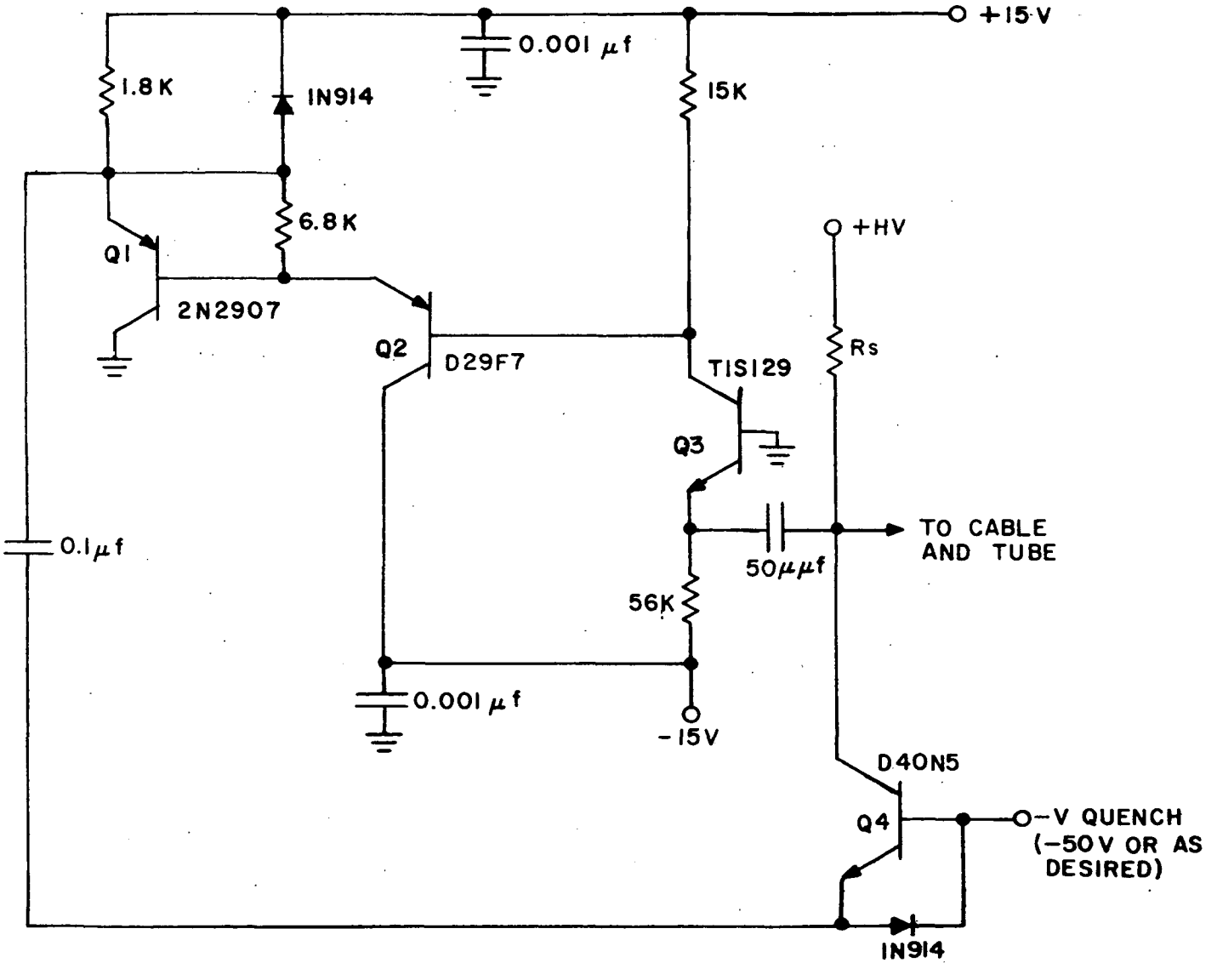

Figure 14. Simplified quenching circuit

This circuit has several attractive features, including the ability to operate over a wide range of quench voltage both positive and negative without modification. It also has a very rapid response and fall time, totaling less than 250 ns for a -50 mV input pulse. When it was employed with tubes which operate "normally" with acceptable results, it provided no fundamental improvement over the preceding (Figure 13) more complex circuit. It also failed to operate properly with tubes which do not work with the more complex circuit. The conclusion drawn from this situation was that for satisfactory GM tube performance to be realized at high temperature, circuit improvements were no longer required; subsequent improvements had to involve the tube *per se*. All detectors became inoperative after a maximum of 25 hours of high temperature operation regardless of the circuit configuration employed. The difficulty encountered in obtaining long-term high temperature operation was complicated by the fact that the operating voltage requirement decreases continuously throughout the useful life of the detector.

At that point in the program it became obvious that the development of a high temperature beta detection technique based on electronically quenched GM tubes had to be considered to be rather fundamental and thus outside the scope of this instrument development program. An optimized quenching circuit design had been achieved, but a thorough investigation and development activity would have to be devoted to the evolution of a stable and reliable quenchless geiger tube capable of operating at up to 260°C without exhibiting internal electro-chemical degradation over typical periods of 10 or 20 hours.

The program efforts, by mutual agreement between the EPA and GCA, were then redirected at a laboratory test demonstration of the overall system operating at near-room temperatures and using the standard self-quenching type detector tubes.

SIGNAL PROCESSING, RECORDING AND CONTROL CIRCUITRY

The principle of mass concentration detection incorporated in this instrument and the method of signal processing will now be discussed in detail. Collection on a continuously moving substrate results in a deposit mass/area, δ, of:

$$\delta = \frac{CQ}{sb} \qquad \text{(V-1)}$$

where C is the mass concentration of particulates collected at a given stage

Q is the flowrate

s is the substrate advance velocity

b is the width of the collection trace.

Since the mass/area sensed by beta radiation attentuation is derived from an exponential absorption process:

$$\sigma = \frac{1}{\mu_m} \ln \frac{f_r}{f_f} \qquad \text{(V-2)}$$

Where μ_m is the characteristic absorption coefficient for the beta emission of the source isotope (0.262 cm^2/mg) for Carbon-14 betas)

f_r and f_f are the detected beta rates for the reference and mass sensors, respectively.

By combining the two preceding equations one obtains:

$$C = \frac{sb}{\mu_m Q} \ln \frac{f_r}{f_f} \qquad \text{(V-3)}$$

The method of implementing this function within the multi-stage instrument under scrutiny was to feed the detected beta pulse train from each detector of the stage pairs into a frequency-to-voltage converter module whose output is directly proportional to the incoming beta rate (i.e., f_r and f_f for

each stage). The output voltages of each pair of these converters was then fed into a common log-ratio module whose output voltage E_{out} is equal to:

$$E_{out} = k_1 \log \frac{E_r}{E_f} \qquad \text{(V-4)}$$

where k_1 is an adjustable constant

E_r and E_f are the output voltages of the two frequency-to-voltage converters corresponding to the beta pulses frequencies f_r and f_f, respectively.

Thus each collection stage consisted of an independent circuit as described above from which the individual output signals E_{out} where obtained and recorded on a multi-trace strip chart recorder.*

It becomes obvious that Equation (V-4) is the electronic analog of the mass concentration beta detection Equation (V-3) for a moving substrate. Thus,

$$C = k_2 E_{out} \qquad \text{(V-5)}$$

where k_2 is a combined proportionality constant incorporating all the geometrical, substrate transport, flowrate and absorption coefficient parameters, as well as the conversion factor from base-ten to natural logarithms.

Therefore, the amplitude of each of the recorded traces is a direct representation of the mass concentration of particulates detected at each impaction stage.

Figure 15 depicts the schematic diagram of the signal processing circuit described above. The constant k_2 is adjusted electronically for each stage as a result of the calibration of each collection stage.

Figure 16 is shown to illustrate the typical format of the output signal from a single stage. This strip chart recording of E_{out} was obtained

*Model 8M-3D, MFE Corp., Salem, New Hampshire.

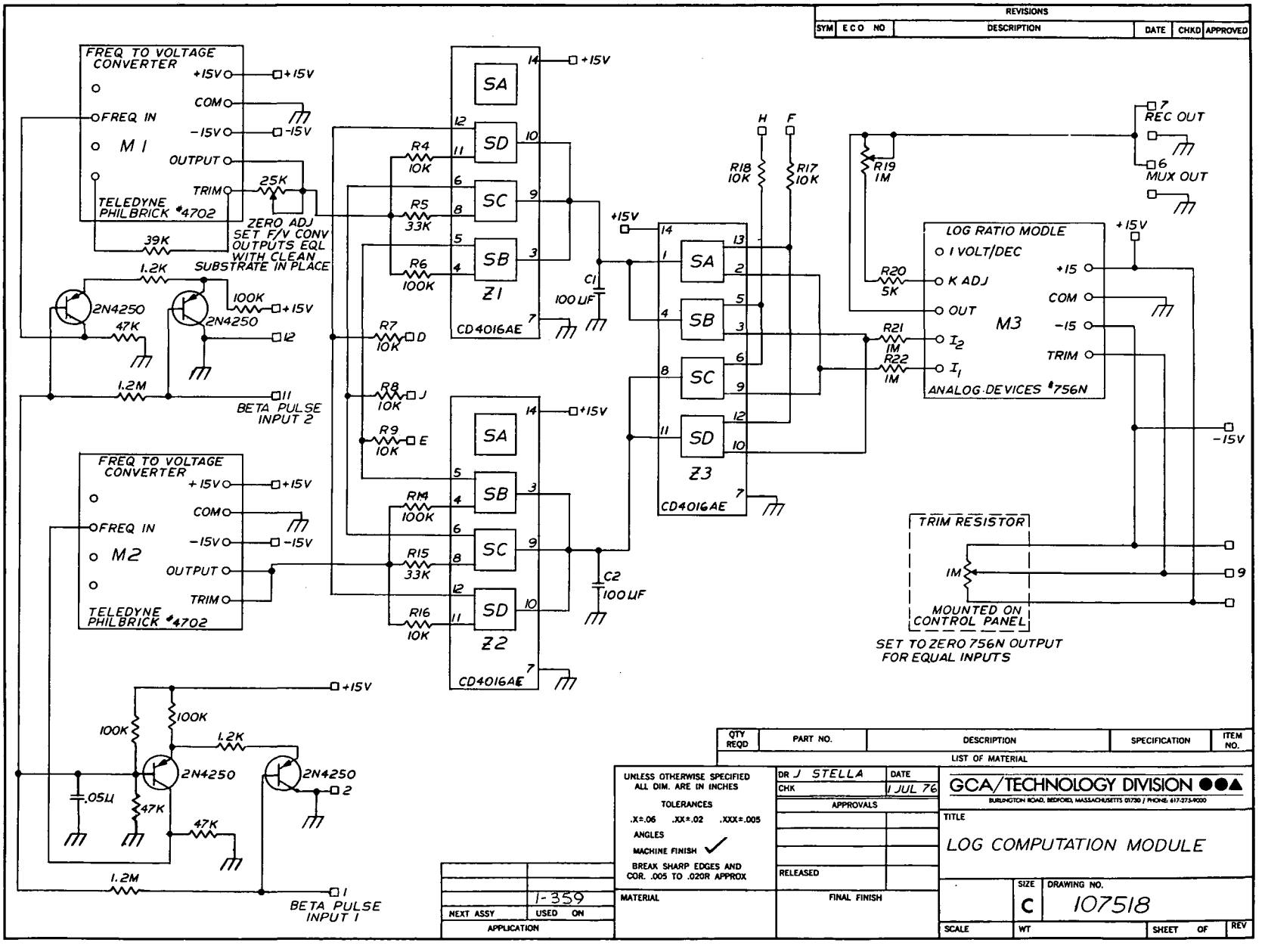

Figure 15. Log computation module

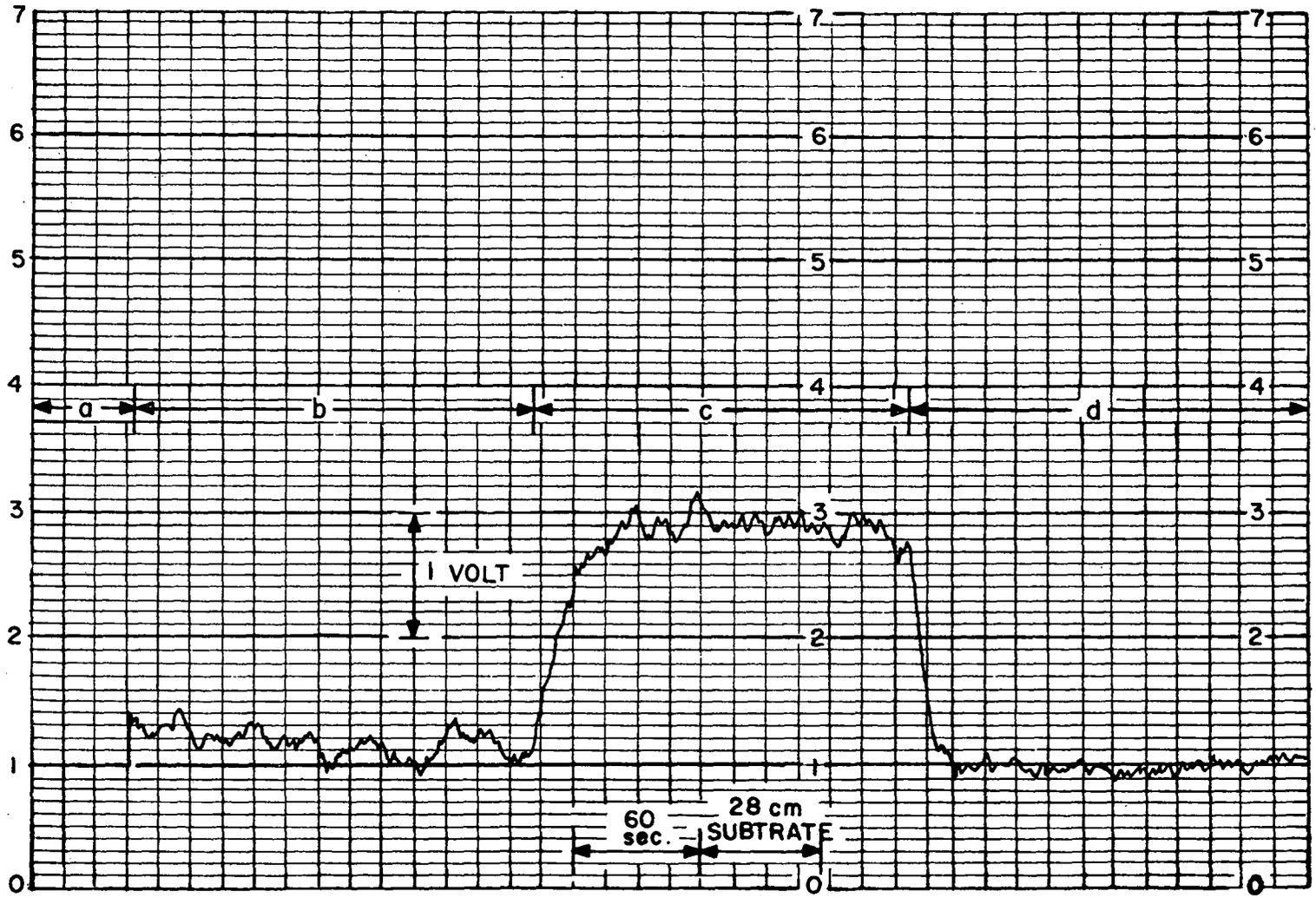

Figure 16. Strip chart recording of dust collection run with test "breadboard"

from a dust collection run, impacting test road dust with a 1 mm diameter nozzle onto a glass-fiber tape moving at a constant speed of 28 cm/sec. The actual concentration of the dust was not determined during this test since it was performed by feeding the dust directly from the outlet nozzle of a Wright dust feeder into the impaction nozzle using the air pressure of the feeder to provide the flow through the impactor. The recording of Figure 16 consists of four different sections representing an equal number of different operating conditions: From left to right: (a) the short straight recording was obtained with zero input to the frequency-to-voltage converters (no signal from either beta detector); (b) the next section was obtained with beta pulse trains to both converters at the same time as the collection substrate filter tape was advancing at 28 cm/sec; (c) the third section (near the level 3 on the chart) was obtained by turning on the dust feeder and running it at a constant feed rate for about 3 minutes and then shutting it off again; and (d) stopping the substrate tape advance but feeding the beta pulses into their respective converters.

As can be seen (a) represents the electronic zero of the system and contains no discernible inherent noise at the sensitivity setting of the recorder. Condition (b) shows the sum of the noise contributions resulting from statistical beta rate fluctuations and substrate tape thickness inhomogeneities. Section (c) shows the signal due to dust collection with the superposition of the noise contributions present in condition (b). Section (d) solely represents the contribution from the beta radiation statistical fluctuations, and thus represents the ultimate practical noise limit of such a system. The amplitude of this noise as well as that of the fluctuations in section (b) of the recording depend on the time constant of the electronic signal processing circuitry, in this case about 13 seconds, and the beta count rate (about 1500 sec^{-1}) which is more or less typical within this application.

An important design aspect was the electrical connection of the individual beta detectors to the above discussed electronic signal processing circuitry (i.e., to the outside of the stack). A single coaxial cable is

required to carry both the pulse signal from each detector to the subsequent circuitry, as well as to supply the detectors with the high voltage they require for their operation (about 750 V d.c.). This coaxial cable was selected on the basis of the original high-temperature objective; i.e., capability to withstand up to 260°C. A miniature (1/8 inch outside diameter) teflon jacketed coaxial cable with teflon insulation was selected for this application (type RG-196A/U) with typical lengths of 5 meters resulting in a shunt capacitance of about 200 pf.

To permit the transmission of the beta pulses to the detection circuit through these long cables the anode resistor had to be connected directly to the high voltage electrode of the geiger detector; i.e., leaving a negligible capacitance to ground between the detector and the anode resistor. As a consequence, an additional component had to be exposed to the high temperature environment; i.e., the anode resistor (one for each detector). Such resistors are commercially available for operation up to 275°C, with a typical resistance value of several megohms, and are made of an oxide resistance film on ceramic core.

The substrate advance drive for all the collection stages consist of a stepping motor with integral gearing manufactured by Mesur-Matic Electronics Corporation. This device, in addition to its conveniently low speed output, has a two-ended shaft design, such that by using a one-way clutch configuration, only one motor was required for the two directions of substrate motion. The low speed characteristics, furthermore obviates the need for the somewhat complex reducing gear that had been originally designed into the upper section of the in-stack head assembly.

The Mesur-Matic stepping motor is driven by a programmable circuit which provides a predetermined number of pulses to the stepping motor, at a selected rate. At the completion of the preselected number of pulses, the direction of the motor is automatically reversed, engaging the clutch at the opposite shaft end and thus driving the substrates in the opposite direction. Translational motion of the cassette occurs at the same time by

means of a separate stepping motor. At the completion of five parallel collection traces the driving circuit automatically stops the stepping motor. An electromechanical pulse counter provides running information on the length of substrate that has been transported, thus permitting the interruption of a run, and its subsequent resumption, if so desired, without changing the substrate cassettes before the end of the normal substrate excursion.

The method of substrate advance incorporating motion reversal has as a consequence the need for electrical inversion of the two signals of each stage whenever the substrate direction is changed. This function is performed by electronic gating. These gates are in turn controlled by a circuit that controls the advance stepping motors. When a predetermined number of advance steps have been performed the motion is reversed at the same time as the lateral tape translation is performed. The need to reverse the input connections to the logarithmic ratio modules when direction reversal takes place arises from the fact that the detector-source pair that functions as reference for one direction becomes the mass sensor in the opposite direction, and in order to preserve a positive output signal at the recording end, the input to the log-ratio converters must be reversed.

Figure 17 shows a front view of the control console. The uppermost section contains the 8-channel strip chart recorder with its individual controls (usually adjusted once), and the chart advance speed selector (2.5, 25, and 500 mm/min) to be used in conjunction with the impaction substrate advance speed selector. The second compartment from the top contains the substrate indexing driver with the thumb wheel decade selector (0 to 9999) of the number of advance pulses, the rate selector (0.7, 5, and 45 steps/second corresponding to 0.42, 3, and 27 cm/min of substrate advance speed), and start, stop and manual advance controls and indicators. The third compartment contains the electronic signal conditioning, computation, and drive circuitry for the seven stages of detection with individual calibration adjustment controls, time constant selector (1, 3, and 10 seconds), and digital stack temperature display. The bottom section contains all power supplies with individual switches.

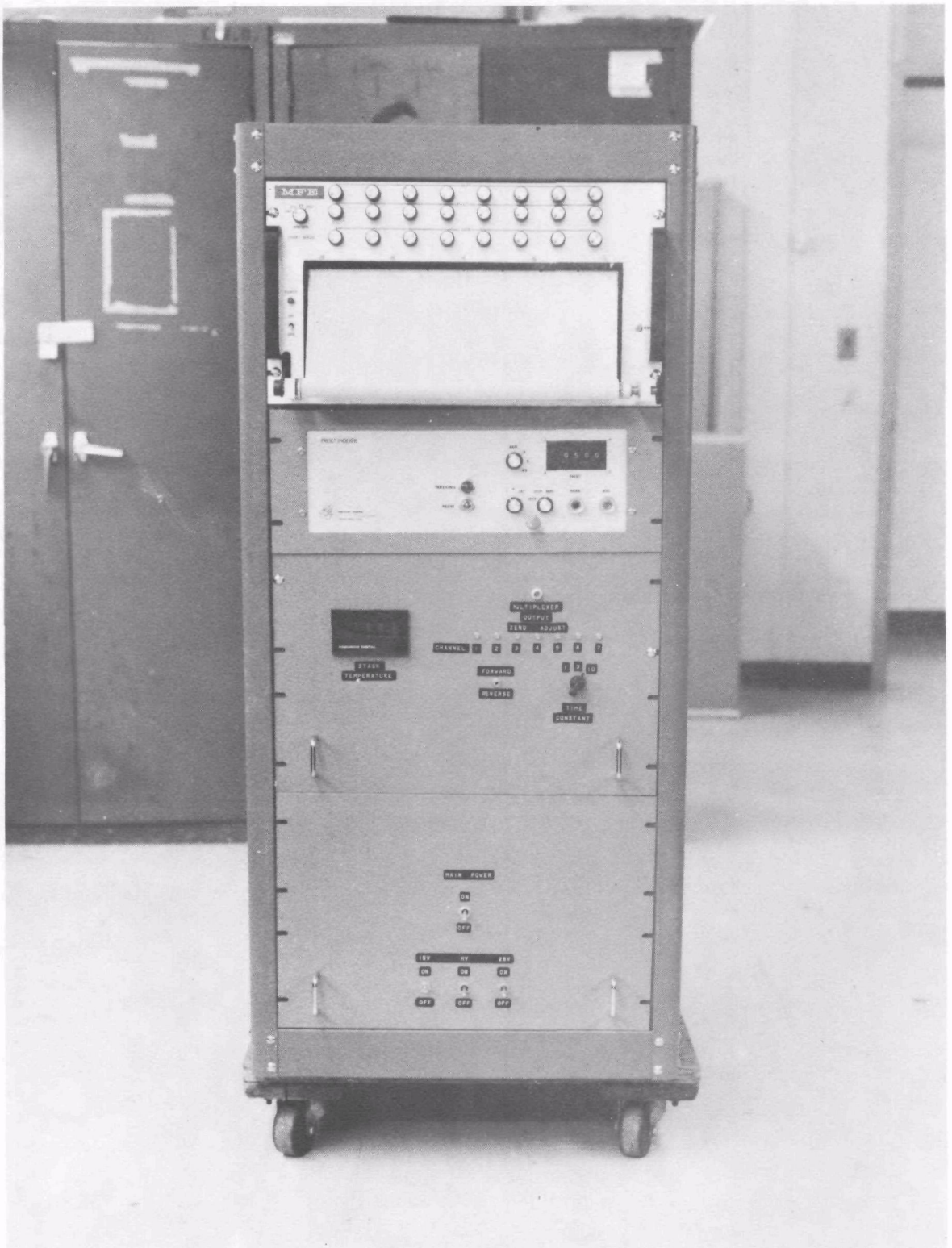

Figure 17. Front view of control console

SECTION VI

INSTRUMENT TESTING

Following the decision to abandon the high-temperature operation objective of the original program, as a result of the failure to obtain beta detectors compatible with such elevated temperatures, system test alternatives were pursued: field testing of a source whose effluent stream temperature did not exceed about 65°C (150°F), and/or testing at the particulate aerodynamic test facility at the EPA Research Triangle, N. C.

SURVEY OF FIELD TEST FACILITIES

The first alternative was pursued very diligently by researching the Plant Approval listings of industrial sources in the State of Massachusetts Public Health Department archives. The resulting survey is listed in detail in Table 11. It has been deemed useful to incorporate this rather exhaustive listing in this report for future information purposes.

Although a significant number of the listed organizations were contacted with respect to the location of an adequate test site for the instrument developed under this program, only two companies agreed, in principle, to allow such testing to be performed — Rosenfeld Co., a cement manufacturer, and Johns-Manville, an insulation material plant. Because of its geographical proximity, the latter organization was considered as an attractive candidate as potential test site. GCA personnel visited Johns-Manville (North Billerica, Mass.) and assessed this facility from the point of view of compatibility with the operation of the multistage-beta-impactor.

Table 11a. DESIGN SHEET FOR INDUSTRIAL AND COMMERCIAL FACILITIES

Company name	Approval year	Company address	Company phone No.	Person contacted	Process operation
Am. Optical - Lens Plant	1975	14 Mechanic, Southbridge			Spraying gold paint
Bay State Abrasives	1973	Union St., Westboro	366-4431		Machining of grinding wheels
Benevento Sand & Gravel	1975	Rt. 62, North Wilmington	658-4762		Stone crushing
Crown Wire & Cable	1975	37 Cashman, Taunton	823-1731		Silo loading
General Tire & Rubber	1975	General St., Reading	944-1540		Dispersion of resins and pigments
Johns-Manville	1975	High St., North Billerica	663-3401		Manuf. troughs
Lee Lima	1975	Marble St., Lee	(413) 243-9953		Limestone grinding & screening
N. Attleboro Foundry	1975	103 Clayton, Dorchester	825-6500		Cast iron foundry
Tyer Rubber	1975	10 Railroad St., Andover	475-5300		Rubber covering of rolls
Borden Chemical	1974	Old Clark Rd, N. Andover	686-9591	Dan James	Chemical transfer
Ideal Tape	1974	1400 Middlesex, Lowell			Rubber chopper
ITT Surprenant Div.	1974	172 Sterling St., Clinton			Compounding powders
Kesseli & Morse	1974	242 Canterbury, Worcester	752-1901		Unloading cement truck
Matlack	1974	Beldertown			Cement transfer
Monsanto	1974	190 Grochnal, Indian Orchard	(413) 788-6911	Wayland	Chemical drying
New England Foundry	1974	10 Embankment, Lawrence	688-1811		Nonferrous foundry
Revere Copper and Brass	1974	24 North Front, New Bedford	999-5601	Mydlack	Nonferrous melting
Texas Instruments	1974	34 Forest, Attleboro			Abrasive sandblast
U.S. Gypsum	1974	200 Terminal, Charlestown	241-9100		Crushing & grinding
Wyman-Gordon	1974	105 Madison, Worcester	756-5111		Grinding
Avon Sale	1973	E. Spring, Avon	587-4180		Baffing rubber
GAF	1973	60 Carver, Millis	376-2661		Production of asphalt roofing
General Tire & Rubber	1973	70 Guichon, Lawrence	682-5121		Coating
G&W	1973	Summer Rd, Boxboro			Coating with vinyl plastics
Nat. Polychemical	1973	Wilmington			Flash drying
Trow Corp.	1973	River Rd, E. Drenfield			Rock crushing
Handy & Harman	1972	Frank Massberg Dr., Attleboro	226-1000		Gaseous chlorination of molten gold

Table 11a (continued). DESIGN SHEET FOR INDUSTRIAL AND COMMERCIAL FACILITIES

Company name	Approval year	Company address	Company phone No.	Person contacted	Process operation
Lawrence Ready-Mix Concrete	1972	Gifford St., Falmouth			
Lynn Sand & Stone	1972	30 Danvers, Swampscott	595-0820		Rock crushing
W. R. Grace	1971	College Rd, Easthampton			Dry solids mixing
Washington Mill Abrasive	1971	20 Main, North Grafton	839-4426		
Neponser Brass Foundry		115 Boston, Dorchester	436-2563	Groleau	
New England Concrete			969-0220		
Burnett Bros.			325-8600		
Wrenthan Sand & Gravel			384-3138	San LaRousa	
Rosenfeld				Bob Barton	
N.E. Concrete Pipe					
Old Colony Crushed Stone					
Whittemore Perlite			470-0317	Gus Sheehy	
Mass Brokes Stone			893-0489	Roy LaBoug	
Fletcher Granite			251-4031		
W. R. Grace-Dewey & Almy Chemical Division		Cambridge	876-1400		
Monsanto		1 Chemical, Everett	397-5010		
Borden Chemical		103 Foster, Peabody	531-2222		

Table 11b. DESIGN SHEET FOR INDUSTRIAL AND COMMERCIAL FACILITIES

Company name	System flow, scfm	Temperature inlet/outlet, °F	Concentration inlet/outlet, gr/ft^3	% < 10 μm	Discharge height, ft	Stack outlet dimensions
Am. Optical - Lens Plant	1,275	70	0.012/0.0055		22	1.33 ft dia.
Bay State Abrasives	11.7 k	70	14.4/0.144	30	15	2 ft x 3 ft
Benevento Sand & Gravel	22.5 k	Ambient	10/0.05		30	4 ft dia.
Crown Wire & Cable	7,650		0/0.0198			
General Tire & Rubber	4,500	50/75	10/0.02		25	20 in. dia.
Johns-Manville	5 k	Ambient	0.25/0.003		45	16 in. dia.
Lee Lima	15 k	Ambient	0/0.03		30	30 in. dia.
N. Attleboro Foundry	10 k	Ambient	48/0.0043	2	5	16-5/8 in.x20-1/8 in.
Tyer Rubber	4 k	Ambient	700/0.0035	100	10	0.92 ft x 1.08 ft
Borden Chemical	8 k	Ambient	5.5/0.055	100	16	13 in. x 14-3/8 in.
Ideal Tape	5,500	Ambient	4.67/0.0047	33		
ITT Surprenant Div.	6,600	Ambient	3/0.003	10		
Kessell & Morse	900	Ambient	13.12/0.018	34		
Matlack	1,200	Ambient	6.9/0.14			
Monsanto	16 k	80 - 90	0.11/0.016	75	40	19.5 ft^2
New England Foundry	12 k	93	0.058		35 - 40	19 in. dia.
Revere Copper and Brass	85 k	110	0.095/0.0005			
Texas Instruments	1,500	Ambient	0/0.0015			
U.S. Gypsum	2,500	140	10/0.01	30		
Wyman-Gordon	11,800	70	0.207/0.023		64	5.1 ft dia.
Avon Sale	4,500	70	6/0.06	95		
GAF	16,400	Ambient	2.5/0.002		36	23 in. x 30 in.
General Tire & Rubber	15-20 k	130/120	0.023/0.014	90	87	3 ft dia.
G&W	4 k	140	0.0036/0.0002	99	24	20 in. dia.
Nat. Polychemical	1,534	165/150	40.33/0.04		12	1.0 in. dia.
Trow Corp.	48 k	Ambient	10.6/0.03	30	10	40 in. x 32 in.
Handy & Harman	18 k	106	1.5/0.04	100	39	3 ft dia.

Table 11b (continued). DESIGN SHEET FOR INDUSTRIAL AND COMMERCIAL FACILITIES

Company name	System flow, scfm	Temperature inlet/outlet, °F	Concentration inlet/outlet, gr/ft^3	% < 10 μm	Discharge height ft	Stack outlet dimensions
Lawrence Ready-Mix Concrete	500	Ambient	3.3/0.0033	28.7	60	2 ft^2
Lynn Sand & Stone	80 k	Ambient	5/0.03		20	4.1 ft x 4.1 ft
W. R. Grace	5 k	80	0.035/0.0035		40	2 ft dia.
Washington Mill Abrasive	6,280	60	0.1/0.0001		6	33 in. x 36 in.
Neponset Brass Foundry						
New England Concrete						
Burnett Bros.						
Wrenthan Sand & Gravel						
Rosenfeld						
N. E. Concrete Pipe						
Old Colony Crushed Stone						
Whittemore Perlite						
Mass Brokes Stone						
Fletcher Granite						
W. R. Grace-Dewey & Almy Chemical Division						
Monsanto						
Borden Chemical						

Table 11c. DESIGN SHEET FOR INDUSTRIAL AND COMMERCIAL FACILITIES

Company name	Date site contacted	Site response	Why site was not contacted
Am. Optical - Lens Plant	N. C.		More liquid than particulate
Bay State Abrasives	6/16/75	No - see letter	
Benevento Sand & Gravel			
Crown Wire & Cable	6/16/75	No	
General Tire & Rubber	6/16/75	No	
Johns-Manville	6/16/75	Maybe - send letter	
Lee Lima			
N. Attleboro Foundry			Concentration too high or low
Tyer Rubber			
Borden Chemical	6/11/75	No stack	
Ideal Tape	N. C.		Concentration too high or low
ITT Surprenant Div.	N. C.		10 percent < 10 μm
Kesseli & Morse	N. C.		34 percent < 10 μm
Matlack	N. C.		Low flow
Monsanto	6/11/75	Only hot stacks	
New England Foundry	6/11/75	Corporate offices only	
Revere Copper and Brass	6/11/75	All stack temp. > 200°F	
Texas Instruments	N. C.		Concentration too low
U.S. Gypsum	N. C.		Concentration too high or low
Wyman-Gordon	6/11/75	Wet collectors	
Avon Sale	6/11/75	Not manufacturing any more	
GAF			
General Tire & Rubber			
G&W			
Nat. Polychemical			
Trow Corp.			
Handy & Harman			

Table 11c (continued). DESIGN SHEET FOR INDUSTRIAL AND COMMERCIAL FACILITIES

Company name	Date site contacted	Site response	Why site was not contacted
Lawrence Ready-Mix Concrete			
Lynn Sand & Stone			
W. R. Grace			
Washington Mill Abrasive			
Neponset Brass Foundry		No	
New England Concrete		No	
Burnett Bros.		No stack	
Wrenthan Sand & Gravel		No	
Rosenfeld		Maybe	
N. E. Concrete Pipe		Oil combustion only	
Old Colony Crushed Stone		Phone out - out of business?	
Whittemore Perlite		Too hot (350-500°F)	
Mass Brokes Stone		No	
Fletcher Granite			
W. R. Grace-Dewey & Almy Chemical Division			
Monsanto			
Borden Chemical			

The particulates to be sampled are generated by the sanding of sheets of insulation (Marinite). The sanding operation is intermittent and large variations in dust loading were anticipated. The approximate particulate concentration was calculated from the estimated mass collected by the baghouse of 9000 kg per 6-1/2 hours of operation with the flow rate through the baghouse of 17 m^3/sec. The calculated upstream concentration is 9.97 grains/ft^3 or 22.83 grams/m^3. Since the process varies considerably, it was considered possible to sample when the concentration is lower.

There were three sampling locations which were considered. One was located inside the work area requiring approximately 20 feet of scaffolding. This location had the advantage of being inside so the equipment would be protected. The other locations were on the roof. One of them was located in a horizontal section leading to the cyclone with the advantage of easy access. The other, located in a short section between the cyclone and the baghouse, had the advantage of a lower particulate concentration. None of the sampling locations was found to be ideal from set up considerations because of problems of supporting the sampling head in the duct. Since the effort required to adapt the instrument to any of the above sampling sites was considered excessive, the decision was reached to concentrate all efforts on the second alternative mentioned above; i.e, testing at the EPA facilities. It should be noted that the personnel at Johns-Manville were exceptionally cooperative and helpful during the survey visit performed by GCA personnel.

INSTRUMENT TESTING AT THE EPA

An intensive effort was devoted to prepare the instrument for a test sequence scheduled for mid-August 1975. The entire electronics subsystem was debugged, tested and repaired as necessary, as well as adjusted to provide a proper output for the multichannel strip-chart recorder. A number of minor, but time-consuming problems had to be overcome within this effort, such as detector cable cross-talk interference, component "infant mortality," etc.

The other major aspect that had to be resolved was the problem of impaction substrate transport and coating. When all seven cassettes were loaded it was found that the resulting friction prevented normal translational motion of the substrate tape. It was found necessary to replace the existing helical gears, which provided the 90° drive from the support member to the collector array, by a set of worm gears with a transmission ratio of 1 to 10. This implied that the stepping motor had to be driven 10 times as fast as before to accomplish the same translational speed. Consequently, the motor drive circuit had to be modified.

The substrate tape used on the instrument for the room temperature tests performed at EPA was 0.036 cm thick Mylar film coated with petroleum jelly as particle adhesive. The substrate tape is coated before it is rolled up on the supply reels, and the desired coating thickness is obtained by the adjustment of the tension of the tape as it is transported to the take-up reel. Coating uniformity was improved by using a spreader pad at the place where the tape unrolls.

Upon arrival at EPA it was found that the instrument had been shaken up considerably in shipment. Although some cards had been jarred from their sockets and many other elements were loose, the instrument was put into operational condition with little difficulty.

On the first full day of testing, fly ash was used at about 0.1 g/m^3. Initially, it was found that the instrument would not respond adequately in the continuously advancing substrate mode due to a high level of "noise" caused by the unevenness of the coating. As a result of this difficulty, a regime was established for making stationary impactions, then pulling the film under the mass sensing detector by advancing the tape a specific amount with the extraction pump inoperative. A sampling time of about 5 minutes was found to give the most satisfactory results.

Next, high level tests were run (1 g/mm^3); again continuous operation gave very marginal results. Therefore, stationary impaction was again used

during this initial effort. Following this set of tests with fly ash as planned, the system was changed over to Fe_2O_3. While this was being done, the collection films were removed and recoated. The effort to obtain satisfactory operation of the wind tunnel with iron oxide particles proved quite unsuccessful due to the inability of the dust feeder to handle this material.

When testing was begun again using fly ash, it was found that the newly coated substrate tapes gave a much lower noise level (about an order of magnitude) than those which had been used before. This fact, in combination with the increase in circuit gain which was also made during the shut down, allowed the instrument to respond satisfactorily in the continuous mode with a reasonable signal to noise ratio even at somewhat reduced concentrations (0.3 to 0.4 gm/m^3). The drastic improvement in operation realized after substrate film recoating was attributed to the achievement of a very significantly improved coating smoothness. It was theorized that during shipment from Bedford, Mass. to the Research Triangle, N.C., successive melting and solidification of the petroleum jelly coating on the rolled up substrate film (the instrument was shipped during the beginning of the month of August) resulted in large scale inhomogeneities of the coating with ridges and troughs causing the unacceptably high noise level observed during the initial tests when operating the system with continuous substrate motion. The mass concentration sensing calibration constants for the recording trace for each of the seven channels, based on their collection geometries, the operating flow rate, the substrate advance speed used during these tests (0.42 cm/min), etc., are listed below for the two operating modes; i.e., stationary and moving substrate.

It is apparent that the sensitivity increases as the impaction orifice (and particle size) gets progressively smaller. This effect is greater for the stationary impaction than for the continuously moving impaction substrate.

Stage	Stationary 5 minute impaction	Continuous impaction with 0.7 step/sec tape drive rate
1	7.7 mg/M^3 div	4.6 mg/M^3 div
2	4.2 mg/M^3 div	3.4 mg/M^3 div
3	2.1 mg/M^3 div	2.4 mg/M^3 div
4	1.04 mg/M^3 div	1.7 mg/M^3 div
5	0.57 mg/M^3 div	1.3 mg/M^3 div
6	0.325 mg/M^3 div	1.1 mg/M^3 div
7	0.184 mg/M^3 div	0.71 mg/M^3 div

Since the particle distribution of fly ash (and many other particle types) is weighted quite markedly towards the larger particles, response falls off in the smaller stages despite the indicated increase in sensitivity. Due to this fact, the stationary impaction scheme normally will show more stages with an observable response than the continuous scheme, since the smallest stages may have insufficient sensitivity to give an indication in the continuous mode for low mass concentrations.

The instrument was run at a flowrate of 9 liters/minute and the corresponding particle cut-off sizes for room temperature operation were: 6.5, 4.0, 2.4, 1.44, 0.90, 0.57 and 0.35 micrometers, aerodynamic diameter. The tests were run in conjunction with the Research Triangle Institute, contracted by the EPA to operate the test facilities at the Research Triangle Park. The results of these tests, wherein other instruments were evaluated as well, are presented and discussed within a pertinent report issued by RTI.[99] These data and accompanying discussion will not be repeated here as they are available as part of that report. Some of the conclusions and relevant data of that report, however, will be reviewed and reexamined here. Reference will be made to Figures 1, 2, 12 and 13 of the RTI report, as well as to the accompanying text.

Figures 12 and 13 of the referenced report are plots of the size distribution as determined by a reference Brink-type cascade impactor and the data points obtained during the normal continuous substrate motion operation of the GCA instrument. The two graphs were obtained at two different mass concentrations, 0.267 and 0.955 g/m^3. These two plots are shown in Figures 18 and 19 of the present report, the circles representing the original data as presented in the RTI report. It is obvious that from the observations made by RTI of the very large and unexpected effect of upstream obstructions in the test tunnel on downstream mass concentrations, the measurements performed with the GCA seven-stage instrument were totally distorted and that any conclusions reached without taking into consideration the obstruction effect are, at best, questionable. As indicated in the RTI report the inlet of the GCA device was only about 2m downstream of the Brink impactor since the latter was inserted in port D and the former in port F of the test tunnel (see Figure 1 of the RTI report). At the operating tunnel velocity of 9.1 m/s, used for the GCA versus Brink tests, Figure 2 of the referenced report shows that the relative centerline concentration in the tunnel dropped to about 28 percent of the upstream or unobstructed concentration value for an obstruction 3m upstream of a sensor. Figure 20 of the present report is a replot of Figure 2 of the RTI document from which it is possible to find the extrapolated concentration fraction for an obstruction 2m upstream of the GCA instrument. This extrapolation is in all probability quite accurate since the three actual data points used fall very close to a straight line. It is thus found from Figure 20 that for the actual test conditions under which the GCA instrument was operated the mass concentration entering this instrument was probably only about 19 percent of the concentration measured by the reference Brink impactor. Thus, it is felt that all the data points of Figures 12 and 13 of the RTI report labeled "GCA data" should be multiplied by 5.3 (i.e., 1/0.19) in order to compensate for the large obstruction effect on the centerline mass concentration. When this correction is applied to the points of the RTI Figures 12 and 13, as shown by the crosses of Figures 18 and 19 of the present report, the agreement between the Brink curves and the GCA data becomes quite good, especially for the 0.955 g/m^3 concentration test. The

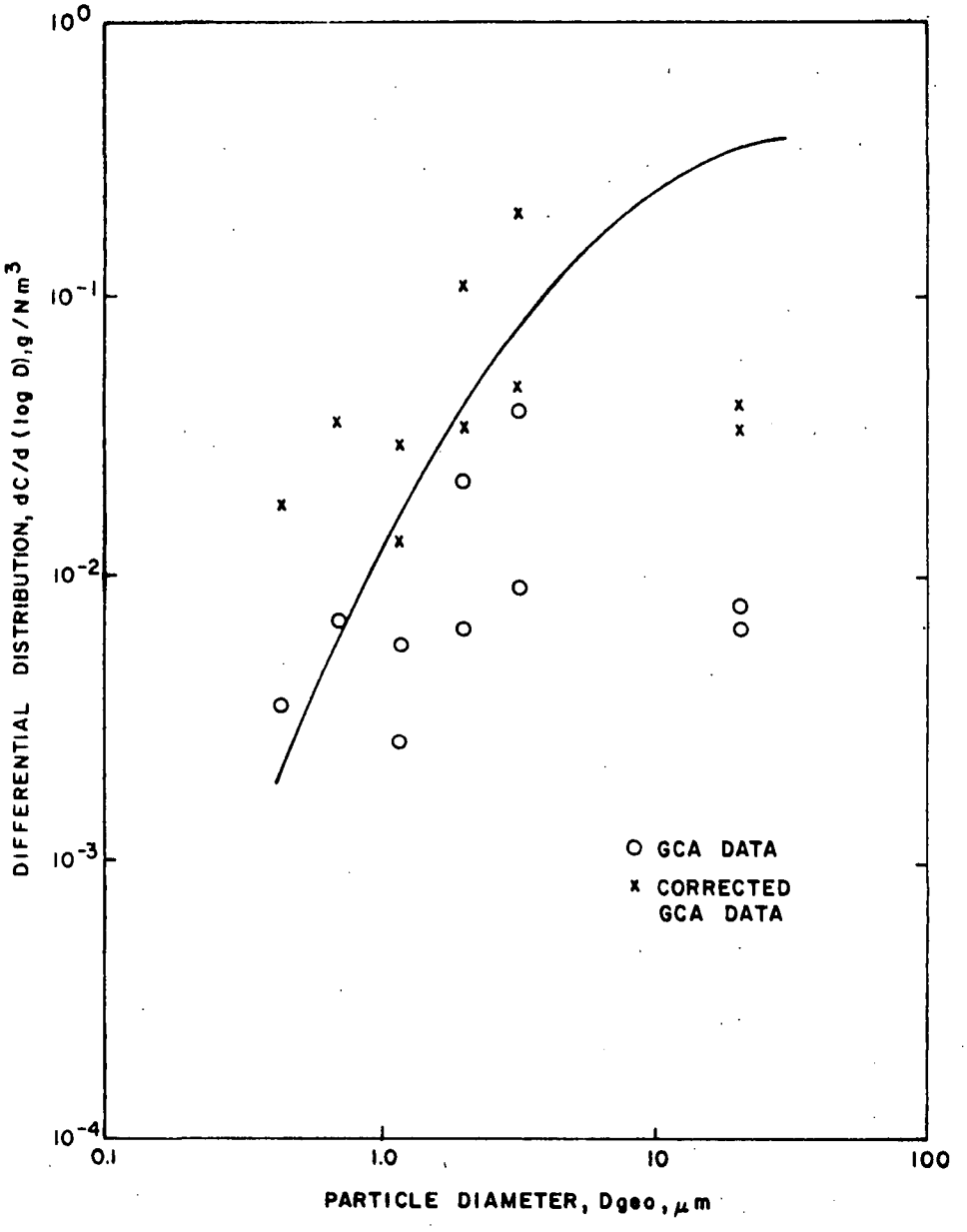

Figure 18. Comparison of GCA in-stack beta impactor data with corresponding Brink curve (concentration = 0.267 g/Hm^3)

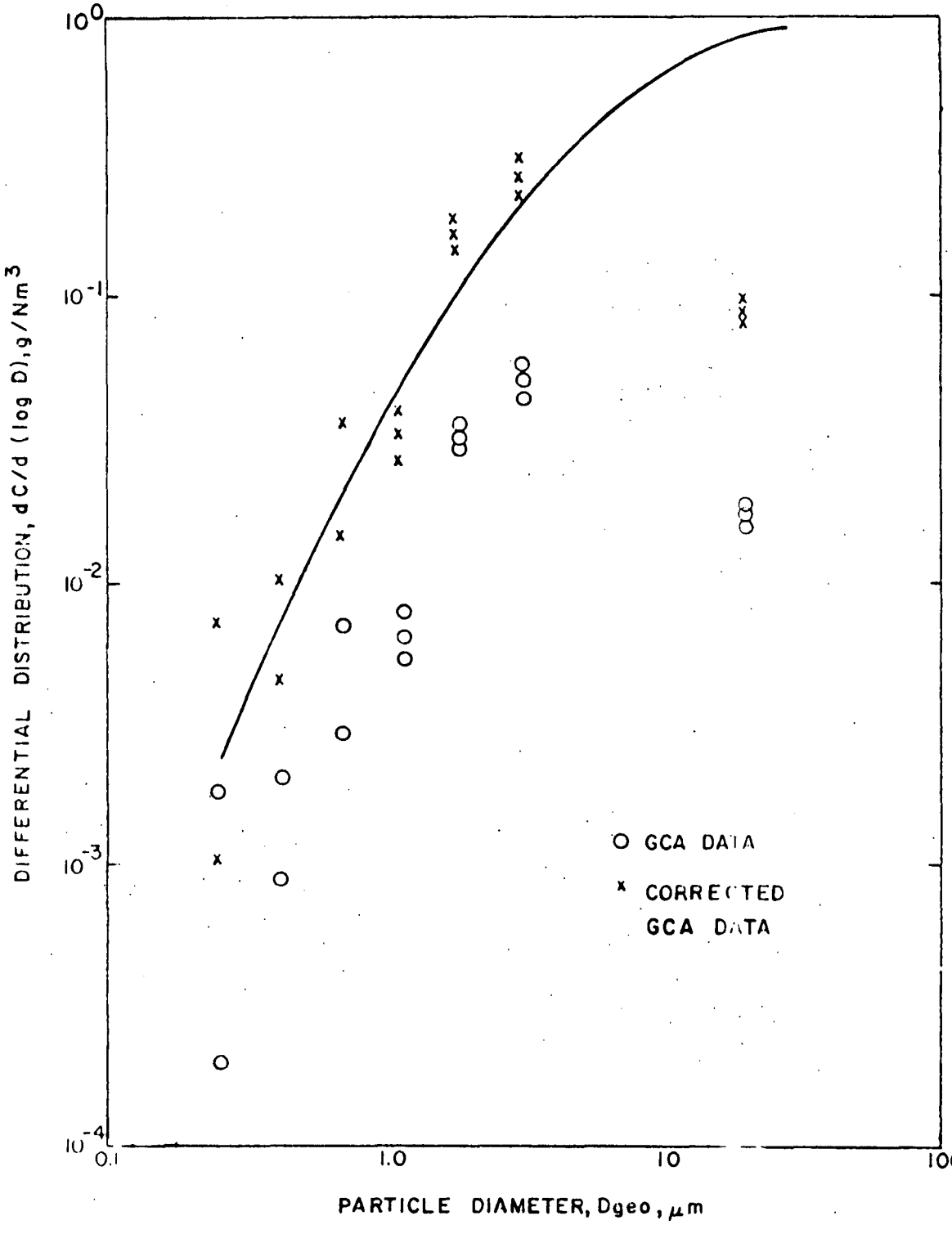

Figure 19. Comparison of GCA in-stack beta impactor data with corresponding Brink curve (concentration = 0.955 g/Hm^3)

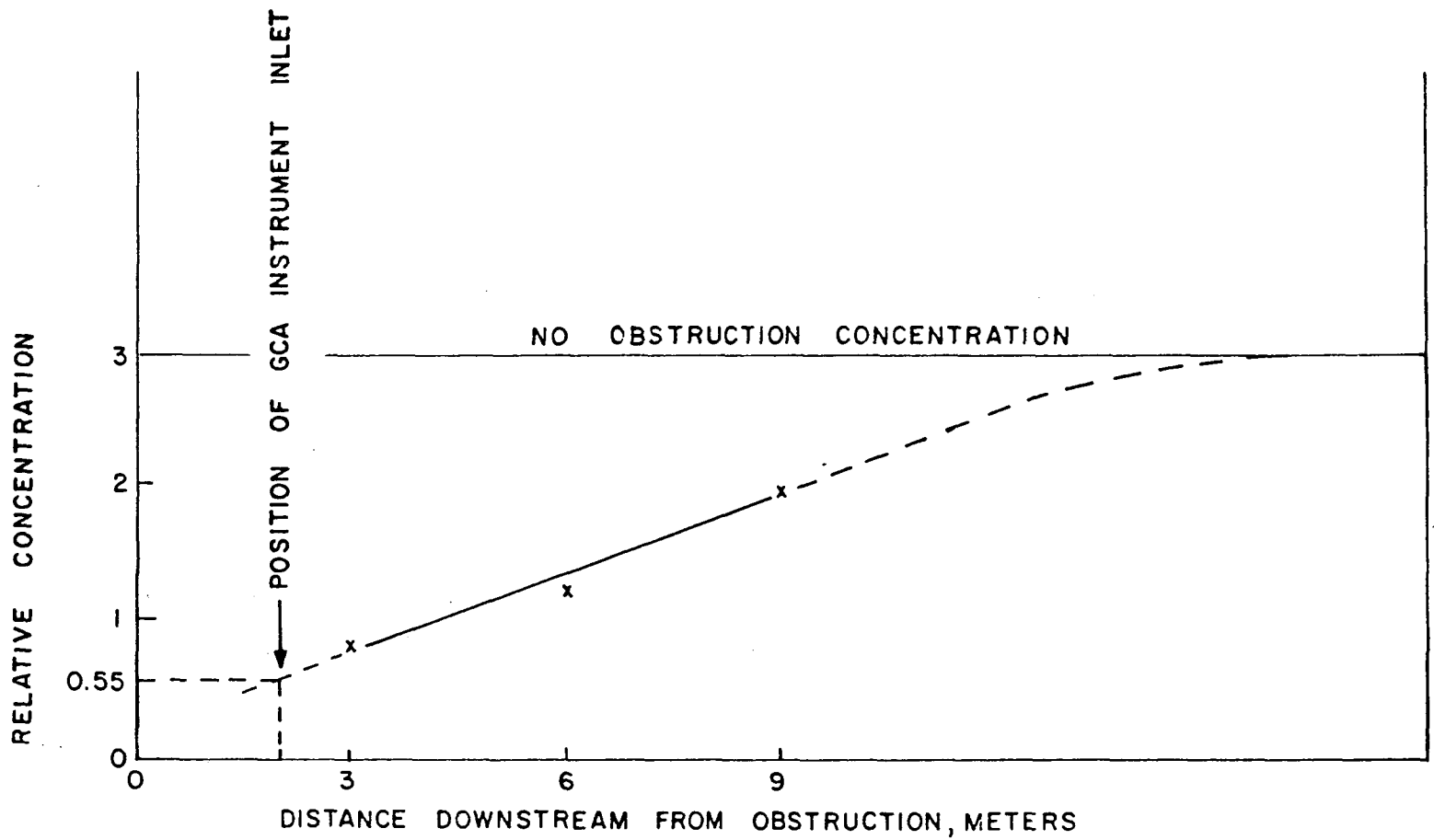

Figure 20. Relative centerline concentration versus distance downstream from obstruction in EPA test tunnel (data points from Figure 2 of Reference 99)

problem associated with the first collection stage, mentioned in the RTI report remains significant but far less staggering than the uncorrected data indicated.

It is felt that in light of the fact that these were the first series of tests to which this instrument was subjected, its performance was quite acceptable and its potential performance should be considered promising.

SECTION VII

REFERENCES

1. Sem, G. J., et al., "State of the Art: 1971. Instrumentation for Measurement of Particulate Emissions from Combustion Sources," Report to EPA on Contrct No. CPA-70-23 (1971).

2. Horn, W., "Process for Continuous Gravimetric Determination of the Concentration of Dust-Like Emissions," Staub (English), 28 No. 9, 20-24 (1968).

3. Dresia, H., Fischotter, P., and Felden, G., "Kontinuierliches Messen des Staubgenaltes in Luft and Abgasen mit Betastrahlen," V.D.I. - Z., 106 No. 24, 1191-1195 (1964).

4. Nader, J. S. and Allen, D. R., "A Mass Loading and Radioactivity Analyzer for Atmospheric Particulates," Amer. Indus. Hyg. Assoc. J., 21, 300-307 (1960).

5. Denzel, P. and Horn, W., "Ein Empfindliches Messverfahren zur Kontinuierlichen Bestimmung der Gravimetrischen Konzentration von Staubformigen Emissionen," Electrotechnische A. PT. A., 87 No. 9, 311 (1966).

6. Aurand, K. and Bosch, J., "Recording Counter for the Continuous Determination of the Concentration of Pulverulent Air Pollutants," Staub (English), 27(10), 21-24 (1967).

7. Benarie, M. and Loverdo, A., "Pesee Automatique des Pollutants Atmospheriques par Jauge Beta," Mesures, Regulation et Automisme, 32 No. 9, 90-95 (1967).

8. Lilienfeld, P., "Beta Absorption Mass Monitoring of Particulates, A Review," Paper No. 71-1031, Joint Conference on Sensing of Environmental Pollutants, Palo Alto, Calif. (1971).

9. Herling, R., "A Beta Gauge and Filter Collection System for the Determination of Automobile Particulate Emissions," Paper No. 71-1032, Joint Conference on Sensing of Environmental Pollutants, Palo Alto, Calif. (1971).

10. Izmailov, G. A., "Measuring the Gravimetric Concentration of Dust in the Air Using Beta Radiation," Industrial Laboratory (English Trans.), 27. 40-43 (1961).

11. Bulba, E. and Silverman, L., "A Mass Recording Stack Monitoring System for Particulates," Paper No. 65-141, 58th Annual Meeting of the Air Pollution Control Assoc., Toronto, Canada (1965).

12. Lilienfeld, P. and Dulchinos, J., "Vehicle Emission Mass Monitor," Final Report, Contract No. 68-02-0209 (1971).

13. Abbott, C. E., Dye, J. E., and Sartor, D. T., "An Electrostatic Cloud Droplet Probe," J. Appl. Meteorol., 11, 1092-1100, (1972).

14. Adams, N. G. and Smith, D., "Studies of Microparticle Impact Phenomena Leading to the Development of a Highly Sensitive Micrometeoroid Detector," Planet. Space Sci., 19, 195-204 (1971).

15. Anonymous, "Air Quality Criteria for Particulate Matter," U.S. Dept. H.E.W., NAPCA Publ. AP-49 (1969).

16. Babich, V. G., et al., "Instrument for Determining the Weight and Active Concentration of Aerosols," U.S. Patent No. 3,558,884 (Jan. 26, 1971).

17. Bahco, A. P., "Particle Detector," Brit. Pat. Abst., 9(49) (1969).

18. Ball, D. F. and Griffiths, D. F., "Measurement of Dust Concentration and Size in Ducts and Chimneys," Environ. Health, 78, 561-566 (1970).

19. Benarie, M. and Quetier, J. P., "Etude d'une Methode Microdynamometrique Pour la Mesure de la Concentration des Poussieres," J. Aerosol Sci., 1, 77-109 (1970).

20. Binek, B., et al., "Using the Scintillation Spectrometer for Aerosols in Research and Industry," Staub (English), 27 No. 9, 1 (1967).

21. Bird, A. N., Jr., McCain, J. D., and Harris, D. B., "Particulate Sizing Techniques for Control Device Evaluation," Paper 73-282, A.P.C.A. Meeting Chicago, Ill. (1973).

22. Brink, J. A., "Cascade Impactor for Adiabatic Measurements," Indus. & Engrg. Chem., 50, 645-648 (1958).

23. Brink, J. A., Kennedy, E. D., and Yu, H. S., "Particle Size Measurements with Cascade Impactors," 65th Annual Meeting, A.I.Ch.E., New York (1972).

24. Brownell, L. E., "Radiation Uses in Science and Industry," University of Michigan, 30 (USAEC) (1961).

25. Brusset, H. and Donati, J. R., "Small Angle X-Ray Scattering for the Determination of Particle Size Distribution," J. Appl. Crystallogr., 2, 55-64 (1969).

26. Carpenter, T. E. and Brenchley, D. L., "A Piezo-Electric Cascade Impactor for Aerosol Monitoring," Am. Ind. Hyg. Assoc. J., 33, 503-510 (1972).

27. Chuan, R. L., "An Instrument for the Direct Measurement of Particulate Mass," J. Aerosol Sci., 1, 111-114 (1970).

28. Coenen, W., "Ein Neues Messverfahren Zur Beurteilung Fibrogener Staube am Arbeitsplatz," Staub (German), 33 No. 3, 99-103 (1973)

29. Cooper, D. W. and Spielman, L. A., "A New Particle Size Classifier: Variable-Slit Impactor with Photo-Counting," ASME Symposium on Flow Studies in Air and Water Pollution, Georgia Inst. of Technol., Atlanta, Ga. (June 1973).

30. Crandall, W. A., "Determining Concentration and Nature of Particulate Matter in Stack Gases," ASME Winter Annual Meeting, Washington, D.C. (Nov. 1971).

31. Davies, C. N., "The Entry of Aerosols into Sampling Tubes and Heads," Brit. J. Appl. Phys., Ser. 2, 1, 921-932 (1968).

32. Davies, R., "Particle Size Analysis," Indus. Engrg. Chem., 62, 87-93 (1970).

33. Dempsey, J. C. and Polishuk, P., Radio Isotopes for Aerospace, Part 2, Plenum Press, New York (1966).

34. Dorsey, J. A. and Burckle, J. O., "Particulate Emissions and Process Monitors," Chem. Eng. Prog., 67, 92-96 (1971).

35. Downs, W. and Strom, S.S., "New Particle Size Measuring Probe - Application to Aerosol Collector and Emissions Evaluation," J. Engineering for Power, 117-126 (1972).

36. Dresia, H., Fredrick, W., and Vogel, J., "Untersuchungen zur Bestimmung des Aschengehaltes in Kohle mit β-und γ- Strahlen," Brennstoff-Chemie, 43 No. 5, 27-30 (1962).

37. Düwel, L., "Latest State of Development of Control Instruments for the Continuous Monitoring of Dust Emissions," Staub, 28 No. 3, 42-51 (1968).

38. Environmental Protection Agency, "Standards of Performance for New Stationary Sources," Federal Register, 36 No. 247, 24876 (Dec. 23, 1971).

39. Environmental Protection Agency, "Appendix B: Reference Method for the Determination of Suspended Particulates in the Atmosphere," Federal Register, 36 No. 84, 8191 (Apr. 30, 1971).

40. Friedlander, S. K., "The Characterization of Aerosols Distributed with Respect to Size and Chemical Composition - II," J. Aerosol Sci., 2, 331-340 (1971).

41. Fuchs, N. A., The Mechanics of Aerosols, The Macmillan Company, New York (1964).

42. Fuchs, N. A., "An Attempt at a Classification of Aerosol Literature," Staub (English), 28 No. 9, 1-6 (1968).

43. Gast, T., "Dust Samplers with Mass-Proportional Indication of Recording," Staub, 20(8), 266-272 (1960).

44. Gast, T., "Acoustical Feedback as Aid in the Determination of Dust Concentrations by Means of an Oscillating Ribbon," Staub, 30 No. 6, 1-5 (1970).

45. Gerber, H. E., "On the Performance of the Goetz Aerosol Spectrometer," Atmos. Environ., 5, 1009-1031 (1971).

46. Goetz, A., "An Instrument for the Quantitative Separation and Size Classification of Airborne Particulate Matter Down to 0.2 Microns," Geofis. Pura Appl., 36, 49-69 (1957).

47. Goldschmidt, V. W., "Measurement of Aerosol Concentrations with a Hot Wire Anemometer," J. Colloid Sci., 20, 617-634 (1965).

48. Goldschmidt, V. W. and Householder, M. K., "Hot Wire Anemometer as an Aerosol Droplet Size Sampler," Atmos. Environ., 3, 643 (1969).

49. Green, H. L. and Lane, W. R., Particulate Clouds: Dusts, Smokes, and Mists, D. Van Nostrand Co., Princeton, N.J. (1964).

50. Gussman, R. A. and Gordon, D., "Notes on the Modification and Use of a Cascade Impactor for Sampling in Ducts," Am. Ind. Hyg. Assoc. J., 27, 252-255 (1966).

51. Hinds, W. and Reist, P. C., "Aerosol Measurement by Laser Doppler Spectroscopy," J. Aerosol Sci., 3, 501-527 (1973).

52. Hochrainer, D., "On the Reliability of Measurements with the Goetz Aerosol Centrifuge," Atmos. Environ., 6, 699 (1972).

53. Hodkinson, J. R., "The Literature on Aerosols," Powder Technol., 1, 51-53 (1967).

54. Hoffman, K. P. and Mohnen, V., "The Operation of the Acoustic Particle Counter," Staub, 28 No. 9, 15-19 (1968).

55. Holzhe, J. and Demmrich, H. Neue Hue He, 14, 74 (1969).

56. Horvath, H. and Rossano, A. T., "Technique for Measuring Dust Collector Efficiency as a Function of Particle Size," J. Air Pollut. Control Assn., 20, 244 (1970).

57. Hounam, R. F. and Sherwood, R. J., "The Cascade Centripeter: A Device for Determining the Concentration and Size Distribution of Aerosols," Am. Ind. Hyg. Assn. J., 26, 122-131 (1965).

58. Keiley, D. P., "An Airborne Cloud Drop-Size Distribution Meter," J. Meteorol., 17, 349 (1960).

59. Knollenberg, R. G., "Particle Size Measurements from Aircraft Using Electro-Optical Techniques," Proc. Tech. Prog., Electro-Optical Systems Design Conf., West Anaheim, Calif. (1971).

60. Lapple, C. E., "Particle-Size Analysis and Analyzers," Chem. Engr., 149 (20 May 1968).

61. Leith, D. and Mehta, D., "Cyclone Performance and Design," Atmos. Environ., 7, 527-549 (1973).

62. Lieberman, A., "Particle Detection and Monitoring - Current State of the Art," Powder Technol., 1, 317 (1967/68).

63. Lilienfeld, P., "Beta Absorption - Impactor Aerosol Mass Monitor," Am. Indus. Hyg. Assn. J., 31, 722 (1970).

64. Lilienfeld, P. and Doyle, A., "Aerosol Particle Monitor," U.S. Patent No. 3,711,707 (Jan. 16, 1973).

65. Lippmann, M., "Respirable Dust Sampling," Am. Indus. Hyg. Assn. J., 31, 138 (1970).

66. Liu, B. Y. H., Marple, V. A., and Yazdani, "Comparative Size Measurements of Monodisperse Liquid Aerosols by Electrical and Optical Methods," Environ. Sci. and Technol., 3, 381-386 (1969).

67. Lundgren, D. A., "An Aerosol Sampler for Determination of Particle Concentration as a Function of Size and Time," J. Air Pollution Control Assoc., 17, 225 (1967).

68. Marple, V. A., "A Fundamental Study of Inertial Impactors," Thesis, University of Minnesota, Minneapolis, Minn. (1970).

69. Martin., J. W. and Stewart, R. F., "Determination of the Incombustible Content of Mine Dust by a Nuclear Method," U.S. Dept. of Interior, Bureau of Mines Report No. 7193 (1968).

70. McShane, W. P. and Bulba, E., "Automatic Stack Monitoring of a Basic Oxygen Furnace," J. Air Pollut. Control Assoc., 18, 216 (1968).

71. Mercer, T. T. and Chow, H. Y., "Impaction from Rectangular Jets," J. Colloid & Interface Sci., 27, 75-83 (1968).

72. Mercer, T. T. and Stafford, R. G., "Impaction from Round Jets," Annals of Occup. Hyg., 12, 1 (1969).

73. Mitchell, R. I. and Engdahl, R. B., "A Survey for Improved Methods for the Measurement of Particulate Concentration in Flowing Gas Streams," J. Air Pollut. Control Assoc., 558-563 (1963).

74. Mitchell, R. I. and Pilcher, J. M., "Improved Cascade Impactor for Measuring Aerosol Particle Sizes," Indus. & Engrg. Chem., 51, 1039-1042 (1959).

75. Nader, J. S., "Developments in Sampling and Analysis Instrumentation for Stationary Sources," J. Air Pollut. Control Assoc., 23, 587-591 (1973).

76. Noll, K. E., "A Rotary Inertial Impactor for Sampling Giant Particles in the Atmosphere," Atmos. Environ., 4, 9 (1970).

77. Olin, J. G. and Sem, G. J., "Piezoelectric Microbalance for Monitoring the Mass Concentration of Suspended Particles," Atmos. Environ., 5, 653-668 (1971).

78. Olin, J. G., Sem, G. J., and Christenson, D. L., "Piezoelectric Aerosol Mass Monitor," Amer. Indus. Hyg. Assoc. J., 32, 209-220 (1971).

79. Pilat, M. J., Ensor, D. S. and Bosch, J. C., "Source Test Cascade Impactor," Atmos. Environ, 4, 671-679 (1971).

80. Pilat, M. J., Ensor, D. S., and Bosch, J. C., "Cascade Impactor for Sizing Particulates in Emission Sources," Amer. Indus. Hyg. Assoc. J., 32, 508-511 (1971).

81. Pueschel, R. F. and Noll, K. E., "Visibility and Aerosol Size Frequency Distribution," J. Appl. Meteorol., 6, 1045 (1967).

82. Schleusener, S. A., "Automatic High-Speed Particle Counting Using a Gas Laser," Rev. Sci. Instr., 39(12), 1916 (1968).

83. Schultz, A., "Einer Anordnung zur Registrierenden Kontaktelektrischen Staubmessung," Staub, 24, 359-363 (German) (1964).

84. Sehmel, G. A., "Particle Sampling Bias Introduced by Anisokinetic Sampling and Deposition Within the Sampling Line," Amer. Indus. Hyg. Assoc. J., 31, 758-771 (1970).

85. Shumilovskii, N. N. and Milttser, L. V., Radioactive Isotopes in Instrumentation and Control, The MacMillan Company, New York (1964).

86. Stöber, W., "A Note on the Aerodynamic Diameter and Mobility of Non-Spherical Aerosol Particles," J. Aerosol Sci., 2, 453-456 (1971).

87. Stöber, W. and Boose, C., "Developing Flow and Particle Deposition in Horizontal Elutriators and Semi-Dispersive Aerosol Centrifuges," Atmos. Environ., 7, 119-130 (1973).

88. Stöber, W. and Flachsbart, H., "Size-Separating Precipitation of Aerosols in a Spinning Spiral Duct," Environ. Sci. Technol., 3, 1280-1296 (1969).

89. Stöber, W. and Zessack, J., "Zur Theorie Einer Konischen Aerosol-zentrifuge," Staub, 24, 295-305 (1964).

90. Strauss, W., Air Pollution Control, Wiley, New York (1970).

91. Turner, G. A. and Fayed, M. E., "Sedimentation Rates of Fine Powders in Air at Different Pressures," Fine Particle Soc. Seminar, Chicago, Ill. (June 1970).

92. Whitby, K. T. and Clark, W. E., "Electric Aerosol Particle Counting and Size Distribution Measuring System for the 0.015 to 1 μm Size Range," Tellus, 18, 573-586 (1966).

93. O'Kelley, G. D., "Detection and Measurement of Nuclear Radiation," NAS-NS3105, April 1962.

94. Ettinger, K. W. and Zastawny, A., "A New Fast Quenching Circuit for Self-Quenched Geiger-Müller Counters," J. Sci. Instrum. Vol. 42, p. 125 (1965).

95. Eckey, H., "A Quenching Circuit of Very Short Rise Time for Geiger-Müller Counters," J. Sci. Instrum., Series 2, Vol. 2, p. 1121 (1969).

96. Karasik, A. S. and Prokofiev, O. N., "Solid-State Construction for Discharge Quenching in Geiger Counters," Pribori i Tekhnika Eksperimenta, No. 4, pp. 61-63 (July-August 1970).

97. Glascock, H. H., Jr. and Webster, H. F., "A Flame Sensor for High-Temperature Ambients," IEEE Transactions on Electron Devices, Vol. ED-18, No. 5, p. 330 (1971).

98. Jernakoff, G., private communication to P. Lilienfeld, August 6, 1974.

99. Gooding, C. H., "Wind Tunnel Evaluation of Particle Sizing Instruments," Report No. EPA-600/2-76-073, March 1976.

100. Lilienfeld, P. and Dulchinos, J. "Portable Instantaneous Mass Monitor for Coal Mine Dust." Amer Ind Hyg Assoc J. 33:136. 1972.

TECHNICAL REPORT DATA
(Please read Instructions on the reverse before completing)

1. REPORT NO. EPA-600/2-77-077	2.	3. RECIPIENT'S ACCESSION NO.
4. TITLE AND SUBTITLE Design, Development, and Demonstration of a Fine Particulate Measuring Device		5. REPORT DATE April 1977
		6. PERFORMING ORGANIZATION CODE
7. AUTHOR(S) Pedro Lilienfeld, Daniel P. Anderson, and Douglas W. Cooper		8. PERFORMING ORGANIZATION REPORT NO. GCA-TR-76-27-G
9. PERFORMING ORGANIZATION NAME AND ADDRESS GCA/Technology Division, Burlington Road, Bedford, Massachusetts 01730		10. PROGRAM ELEMENT NO. 1AB012; ROAP 21ADL-018
		11. CONTRACT/GRANT NO. 68-02-1341
12. SPONSORING AGENCY NAME AND ADDRESS EPA, Office of Research and Development, Industrial Environmental Research Laboratory, Research Triangle Park, NC 27711		13. TYPE OF REPORT AND PERIOD COVERED Final; 7/73-8/75
		14. SPONSORING AGENCY CODE EPA/600/13

15. SUPPLEMENTARY NOTES IERL-RTP project officer for this report is William B. Kuykendal, Mail Drop 62, 919/549-8411 Ext 2557.

16. ABSTRACT The report describes the design, development, and testing of a fine particulate source monitoring instrument for real-time measurement of mass concentration as a function of aerodynamic particle size. It includes a literature review and selection of the operating principle on which the instrument is based. The described device size-segregates particulates using inertial jet-to-plate impaction on a continuously moving substrate, and determines collected mass using beta radiation attenuation. The collection-detection system consists of a 7-impaction-stage cascaded configuration for direct insertion into a stack, with beta mass sensing at each collection stage. The program's initial objective--to develop an instrument that could be operated at up to 260 C (500 F)--could not be met: the beta detectors failed to operate satisfactorily when exposed to such temperatures. However, the instrument was completed and tested satisfactorily in a test tunnel at room temperature.

17. KEY WORDS AND DOCUMENT ANALYSIS

a. DESCRIPTORS	b. IDENTIFIERS/OPEN ENDED TERMS	c. COSATI Field/Group
Air Pollution Fines Measurement Instruments Weight (Mass) Beta Particles	Air Pollution Control Stationary Sources Particulate Mass Concentration Inertial Impaction	13B 14B

18. DISTRIBUTION STATEMENT Unlimited	19. SECURITY CLASS *(This Report)* Unclassified	21. NO. OF PAGES 132
	20. SECURITY CLASS *(This page)* Unclassified	22. PRICE

EPA Form 2220-1 (9-73)