United States
Environmental Protection
Agency

Industrial Environmental
Research Laboratory
Cincinnati OH 45268

EPA-600/2-78-039
March 1978

Research and Development

Recycling of Water in Poultry Processing Plants

Environmental Protection Technology Series

RESEARCH REPORTING SERIES

Research reports of the Office of Research and Development, U.S. Environmental Protection Agency, have been grouped into nine series. These nine broad categories were established to facilitate further development and application of environmental technology. Elimination of traditional grouping was consciously planned to foster technology transfer and a maximum interface in related fields. The nine series are:

1. Environmental Health Effects Research
2. Environmental Protection Technology
3. Ecological Research
4. Environmental Monitoring
5. Socioeconomic Environmental Studies
6. Scientific and Technical Assessment Reports (STAR)
7. Interagency Energy-Environment Research and Development
8. "Special" Reports
9. Miscellaneous Reports

This report has been assigned to the ECOLOGICAL RESEARCH series. This series describes research on the effects of pollution on humans, plant and animal species, and materials. Problems are assessed for their long- and short-term influences. Investigations include formation, transport, and pathway studies to determine the fate of pollutants and their effects. This work provides the technical basis for setting standards to minimize undesirable changes in living organisms in the aquatic, terrestrial, and atmospheric environments.

This document is available to the public through the National Technical Information Service, Springfield, Virginia 22161.

EPA-600/2-78-039
March 1978

RECYCLING OF WATER IN POULTRY PROCESSING PLANTS

Interim Technical Report

by

C. J. Rogers
Stanford Research Institute
Menlo Park, California

Contract No. S-800930

Project Officer

Jack L. Witherow
Food and Wood Products Branch
Industrial Environmental Research Laboratory-Cincinnati
Corvallis, Oregon 97330

INDUSTRIAL ENVIRONMENTAL RESEARCH LABORATORY
OFFICE OF RESEARCH AND DEVELOPMENT
U.S. ENVIRONMENTAL PROTECTION AGENCY
CINCINNATI, OHIO 45268

DISCLAIMER

This report has been reviewed by the Industrial Environmental Research Laboratory-Cincinnati, U.S. Environmental Protection Agency, and approved for publication. Approval does not signify that the contents necessarily reflect the views and policies of the U.S. Environmental Protection Agency, nor does mention of trade names or commercial products constitute endorsement or recommendation for use.

FOREWORD

When energy and material resources are extracted, processed, converted, and used, the related pollutional impacts on our environment and even on our health often require that new and increasingly more efficient pollution control methods be used. The Industrial Environmental Research Laboratory - Cincinnati (IERL-CI) assists in developing and demonstrating new and improved methodologies that will meet these needs both efficiently and economically.

"Recycling of Water in Poultry Processing Plants" presents the results of pilot scale studies on treating water for recycle in the chiller used in poultry processing. Several combinations of treatment processes were evaluated. The use of a diatomaceous earth filter was the most economic option that maintained bacterial levels below that in a chiller without recycled water which was the project control. This interim report completes EPA work on this project although all planned activities were not completed. For further information contact Dr. H. Kirk Willard, Food and Wood Products Branch, Industrial Pollution Control Division, IERL-Ci.

David G. Stephan
Director
Industrial Environmental Research Laboratory
Cincinnati

ABSTRACT

Studies were conducted on recycling chiller water in a poultry processing plant. The USDA requires a half gallon of water per bird in the chiller system to ensure sanitary product quality. In order to maintain equivalent chiller water quality at reduced flow a recycling system must be provided with the capability of removing solids and controlling the microbial population.

UV was used to control the microbial population. For this control to be effective, solids must be removed to a level to allow light transmission. Methods studied include: 1) cyclonic desludgers, 2) vibrating screens, 3) floatation cells, 4) centrifugal waste concentration, 5) filtration with diatomaceous earth (DE) filter aid, and 6) activated carbon.

Water from a pilot-scale chiller was passed through a pilot diatomaceous earth filter system having an equivalent pore size of 0.7u and returned to the chiller for reuse. At 60 percent recycle, water in the chiller using the recycled water maintained a bacterial level equivalent to that in a comparable nonrecycle system. The recycle and reuse of chiller water can reduce new water requirements per bird from 0.5 gallons to 0.2 gallons without a deterioration in the bacterial quality of the water in the chiller.

Operating costs for the DE filtration system with 30 gallons (113.5 l) equivalence of ice per minute are $79.06 per day. Normal operating costs of the chiller without recycle are $146.90 per day, thus a savings of $67.84 per day. These do not include manpower and equipment costs. Figures are calculated based on a system that overflowed 100 gpm (6.31 l/sec) for an 18 hour day.

CONTENTS

Section		Page
I.	Introduction	1
II.	Experimental Procedures	3
III.	Summary	20
IV.	Appendix	28

TABLES

Number		Page
1.	Characteristics of Prechiller Water	5
2.	Chill Tank Benchmark Data for Chilling System Processing 200,000 Birds Per Day	6
3.	Characteristics of Chill Water Treated With A Cyclonic Desludger	7
4.	Characteristics of Chilled Water Passing Through a Vibrating Screen	7
5.	Characteristics of Chill Water After Treatment With Centrifugal Waste Separator and Floatation Cell	9
6.	Characteristics of Prechiller Water After Treatment With Diatomaceous Earth Filter	9
7.	Characteristics of Prechiller Water After Treatment With Diatomaceous Earth Filter, Activated Carbon, and Ultraviolet Light	11
8.	Optical Density of Prechiller Water After Treatment With DE Filter, Activated Carbon, and UV Light	15
9.	Bacteriological Results of Pilot System Without Activated Carbon	19
10.	Bacteriological Results of Pilot System Without Activated Carbon or Ultraviolet Light	19
11.	Total Solids and Total Bacterial Count Comparisons of Three Water Recycling Systems Versus Conventional System Used In Chilling Poultry	21

FIGURES

Number		Page
1.	Poultry Chill Water Treatment	12
2.	Pilot Test System for Recycling Poultry Chilling Water	14
3.	Ultraviolet Energy Versus Time in Pilot Recycling System Using Activated Carbon	16
4.	A Pilot Recycling System Without Activated Carbon	18
5.	A Pilot Recycling System Without Activated Carbon or Ultraviolet Light	18
6.	Rough Schematic Diagram of Proposed Diatomaceous Earth Filter System	22

SECTION I

INTRODUCTION

By federal regulation, exceptionally large amounts of water must be used in the processing of poultry. At several processing steps, specified quantities of water must be used per bird. The primary objective of this water use is to ensure a sanitary product, particularly from a microbiological standpoint. A major need exists not only to decrease the quantity of water used, but also to decrease the concentration of contaminants--primarily organics--in the water as it leaves the plant.

In a research program being sponsored by the Environmental Protection Agency and the Pacific Egg and Poultry Association, Stanford Research Institute is performing studies that, it is hoped, will lead to essentially a complete recycling of water in the poultry processing plant. This study is to demonstrate the efficacy of the recycling concept by establishing a full-scale recycling system in the chiller operation of a poultry plant. The chiller operation is essentially the last step in the processing of the bird, and its function is to reduce the body temperature of the bird from 98°F to 34-35°F*. In most U.S. processing plants, this operation consists of flowing the birds through tanks of chilled water. To prevent an excessive build-up of contaminants in the tanks, the processor is required to have an overflow of one half-gallon of water per bird from the chill tank, with the make-up being provided by potable water.

In the poultry processing plant where this study is being performed, approximately 200,000 birds are processed each day; processing time is 16 hours per day. With the overflow requirement and the initial volume of the tanks, approximately 125,000 gallons of water are used per day in the chiller system.

If a complete recycling system could be used, the following specific improvements would be achieved:

(1) A saving in water consumption.

(2) A decrease in the amount of waste effluent from the chiller.

(3) A saving in the refrigeration costs.

(4) A change in the USDA's requirement of a half-gallon of overflow per bird.

(5) Technology that could be used at additional locations in the poultry processing plant and in other food industries.

Considerations of the impact of a recycling system are described in the

* For metric conversions, refer to the appendix.

experimental section of this report.

To accomplish the goals of this study, it is necessary to have a recycling system that will remove a large portion of the solids in the water and will provide a means of keeping the microbial population down. Such a system is described in the experimental section.

This report covers the water recycling program in the poultry processing plant from the inception of the program (June 12, 1972) to the present. At this point, sufficient data are available to allow for the scale-up of the entire system.

SECTION II

EXPERIMENTAL PROCEDURES

STUDY SITE AND CHARACTERIZATION OF PLANT

The recycling portion of this study is being performed at Foster Farms in Livingston, California, and the analytical work is being conducted at Stanford Research Institute, Menlo Park, California. Foster Farms processes approximately 190,000 birds per day in two eight-hour shifts; two parallel processing lines are used, each handling 95,000 birds. This method provides an ideal situation for this study because a recycling system can be applied to one line, while the second line serves as a control.

The last step in the processing of the bird before it is graded and packed is to chill the bird to approximately 35°F by immersing it in chilled water. The system consists of a prechill tank containing approximately 1,500 gallons of water at 48°F and a final chill tank containing 7,000 gallons of water at 32°F to 33°F. At the present flow rate, each parallel chill system receives 100 birds per minute, reguiring 50 gallons per minute (gpm) of overflow. The potable make-up water is added to the chill tank in the form of chilled water (35 gpm at 33°F) and ice (15 gpm). Fifty gpm flows from the prechiller into the general effluent of the plant. At this overflow rate, a turnover in the volume of the chill system takes 140 minutes.

To provide for a cleaner system, the water in the prechill tank is changed twice, in addition to the original fill. Therefore, as a result of the original filling of the chill system, the overflow, and the changing of the prechiller, a total of 59,000 gallons of water is used for each of the parallel chill systems, giving a total of 118,000 gallons per day.

ANALYTICAL STUDIES

The following analyses are performed on the water samples:

- BOD
- Total solids
- Total fixed residue
- Nonfilterable residue
- Nonfilterable fixed residue
- Filterable residue
- Filterable fixed residue
- Oil and grease
- Iron--filterable
- Chlorides
- Total plate count
- Total coliform
- pH
- Temperature at time of sampling
- Absorbancy at 253.7 nm

In general, the methodology of the American Public Health Association (Standard Methods for the Examination of Water and Wastewater, 13th ed., APHA, New York, 1971) is used for the analyses.

CHARACTERISTICS OF THE CHILL SYSTEMS WATER

Table 1 shows characteristics of the water from a prechiller tank. The table shows the high and low values that have been observed in our analyses as well as the average from all analyses and the number of analyses run to determine the average. The characteristics of the water coming into the plant are also described. The optical density data are of significance, since a component of the recycling system is the ultraviolet light of 253.7 nm, which kills microorganisms. For the system to function properly, a good transmission through the water must be achieved. As seen in Table 1, the original prechill water has less than 2% transmission. A diatomaceous earth filter to remove suspended solids (nonfilterable residue) and activated carbon to remove some dissolved solids (filterable residue) are used in the recycling system to increase the ultraviolet transmission.

Table 2 presents data on the characteristics of the average materials that are washed from the birds in the chill system and gives the totals for a 200,000-bird operation such as the one at Foster Farms.

STUDIES ON THE REMOVAL OF SOLIDS FROM THE WATER

Since the primary requirement of the recycling system is that it maintain a sanitary condition in the chill system, the water must be treated to decrease the microbiological content. In the system used in our early studies, UV light was used to accomplish this goal. However, sufficient solids (both soluble and insoluble) must be removed to get adequate transmission of the UV light in the sterilizing chambers. Various systems have been examined to determine the most suitable means of removing the solids. These are described below.

Cyclonic Desludgers

The original proposal for this study indicated that cyclonic desludgers (SS-500, Ultradynamics Corporation) would be used to remove the suspended solids (nonfilterable residue). One of these units was received in October 1972, and tests were begun to determine its effectiveness in removing solids to allow increased UV transmission. As the results presented in Table 3 show, these cyclonic desludgers are inadequate for removing the types of suspended solids present in poultry chill water. Since cyclonic desludgers operate primarily on differences between the density of the suspended solids and that of the water, this result--in hindsight--is not surprising.

TABLE 1. CHARACTERISTICS OF PRECHILLER WATER

Materials Present in Water	Prechiller Water			Incoming Water
	High	Low	Average*	
BOD (mg/l)	750	304	502/25	0
Total solids (mg/l)	1561	762	1081/29	254
Nonfilterable residue (mg/l)	660	123	272/28	4
Filterable residue (mg/l)			809/28	250
Oil and grease (mg/l)	370	73	138/24	--
Total bacteria count (cells/ml)	1.3×10^6	6.08×10^2	$3.3 \times 10^5/6$	--
Coliform (cells/ml)			$6.0 \times 10^3/2$	--
Optical density * @ 253.7 nm (% transmission)+	2.4 (1%)	0.88 (13%)	1.7/2 (2%)	0.036 (93%)

* Calculated average/no. samples tested

\+ 100% = distilled water

TABLE 2. CHILL TANK BENCHMARK DATA FOR CHILLING SYSTEM PROCESSING 200,000 BIRDS PER DAY

Materials Washed from Bird	Average (mg/l)	Water Supply (mg/l)	Difference (mg/l)	mg/bird	lb/day
BOD	502	0	502	973	429
Total solids	1,081	254	827	1,602	706
Nonfilterable residue	272	4	268	519	229
Filterable residue	809	250	559	1,083	477
Grease	138	0	138	267	118

TABLE 3. CHARACTERISTICS OF CHILL WATER TREATED WITH A CYCLONIC DESLUDGER

Materials Present in Water	Chill Water (Initial)	Water from Desludger
BOD (mg/ml)	825	720
Total solids (mg/ml)	943	834
Nonfilterable residue (mg/ml)	251	114
Oil and grease (mg/ml)	73	74
Total bacteria (cells/ml)	6.2×10^4	1.06×10^5
Optical density @ 253.7 nm (% transmission)	1.3 (5%)	1.6 (2%)

TABLE 4. CHARACTERISTICS OF CHILLED WATER PASSING THROUGH A VIBRATING SCREEN

Materials Present in Water	Chill water	Water from Screen (size*)			
		84/170	165/90	230/63	400/37
Total solids (mg/ml)	1146	950	810	893	828
Nonfilterable residue (mg/ml)	272	270	157	152	107
Oil and grease (mg.ml)	135	93	47	60	34
Optical density @ 253.7 nm	1.5	1.3	1.3	1.3	1.3

* Size = mesh/size of openings (μ).

Vibrating Screens

Vibrating screens with various pore sizes were examined next. These screens were not intended to be alone in the removal of solids, but they could be used for removing most of the larger suspended solids. As Table 4 shows, the screens did remove a portion of the suspended solids, but not a significant amount.

Flotation Cells

Since many of the suspended solids in the chill water are fatty or proteinaceous in nature, flotation systems should be successful in removing a certain percentage of the suspended solids. Table 5 shows data on the effectiveness of a flotation cell. The system is generally described in the following section.

Centrifugal Waste Concentration

One of the primary drawbacks in the use of a screening system for the removal of solids is that, if a small enough mesh is used to remove a significant quantity of small solids, the flow of water is highly restricted. However, several systems are commercially available in which the water is forced through the screen by a centrifugal action, while the solids are sloughed off by various techniques, such as a high-pressure backwash. Such a system, capable of flow rates up to 300 gpm, was made available to us by Sweco, Inc. In addition to removing suspended solids by the screen, the water passing through this system was aerated, making it well suited for removal of solids in a flotation cell. Table 5 shows data collected for such a centrifugal screeening system combined with a flotation cell. In this particular study, flow rates of 80 gpm were used.

As the results in this table show, 58% of the suspended solids (nonfilterable residue) were removed. However, this is not sufficient for obtaining adequate UV transmission. Furthermore, up to 20% of the total water flow ended up with the sludge.

Filtration with Diatomaceous Earth Filter Aid

Filtration systems obviously offer the greatest potential for removing suspended solids down to the smallest size with the most ease. However, for removal of large quantities of material while maintaining high flow rates, filter aids must be used, such as diatomaceous earth (DE). Not only can exceptionally fine equivalent pore sizes be obtained with (DE), but, by continually adding DE body feed during the operation of the filter, clogging can be avoided.

Table 6 shows data for the water after it has passed through a DE filter. Data are presented for the existing prechiller water, the filtered prechill water, and a model prechiller in which the water has

TABLE 5. CHARACTERISTICS OF CHILL WATER AFTER TREATMENT WITH CENTRIFUGAL WASTE SEPARATOR AND FLOTATION CELL

Materials Present in Water	Chill Water	Water from* Centrifugal Separation	Water from Flotation Cell	Sludge from Separation
BOD	531	438	413	798
Total solids (mg/ml)	1147	958	903	2099
Nonfilterable residue (mg/ml)	295	124	145	827
Oil and grease (mg/ml)	187	61	88	787
Optical density @ 253.7 nm	1.93	1.38	1.6	2.85

* Screen size = 37 μ.

TABLE 6. CHARACTERISTICS OF PRECHILLER WATER AFTER TREATMENT WITH DIATOMACEOUS EARTH FILTER*

Materials Present in Water	Existing Prechiller Water	Filtered Prechill Water	Recycled Prechiller Water
BOD (mg/l)	623	198	235
Total solids + (mg/l)	1184/934	773/523	776/526
Nonfilterable residue (mg/l)	315	0	25
Filterable residue + (mg/l)	869/619	773/523	751/501
Oil and grease (mg/l)	165	37	50
Optical density (253.7 nm) ‡	2.2 (<1%)	0.81 (16%)	0.9 (12.8%)

* Samples taken after 16 hours of operation.

\+ Determined value/determined value less hardness of incoming water.

‡ Transmission.

been recycled. These data show that the DE filter is able to remove all suspended solids (nonfilterable residue), greatly reduce the BOD, and remove a large portion of the oil and grease. Use of the filter elevated the transmission of UV light from 1 to 16%. When the water in the recycled prechiller is exchanged every 20 minutes with water from the filter unit, the water is much cleaner than that contained in the existing prechiller, which is turned over every 170 minutes.

Various types of DE filters were examined in this study. The data presented in Table 6 were obtained while using a pressure leaf filter with a precoat of 0.1 lb of Hyflo Super Cel® (Johns-Mainville) per square foot of filter area. A body feed rate of 0.05% DE (weight/volume) and a flow rate of one gallon per square foot of filter surface were used.

Activated Carbon Studies

As seen from the data presented in Table 6, the DE filter was able to remove essentially all of the suspended solids, thus increasing the transmission of the UV light from 1 to 16%. This is not adequate for efficient use of the UV lights, however. Therefore, it is necessary to remove some of the dissolved solids that are interfering with the UV transmission. In this particular system, the best means of doing this appears to be with activated carbon.

Preliminary laboratory studies were conducted, and it was determined that Darco S-51 activated carbon powder added with the DE body feed at a level of 0.05% (W/V) was able to remove sufficient dissolved solids (primarily organics) to increase the UV transmission to a satisfactory level. Data presented in Table 7 shows that in such a system, the UV transmission was increased from 2.4 to 65.6%.

MODEL RECYCLING SYSTEM

To establish the overall efficiency of the proposed system, a pilot model was established that was exactly equivalent to the present chill system but was 1/100th the size. This system had essentially all the components shown in Figure 1; the figure shows a schematic diagram of the system that has proved to be the most successful.

In our study, water is taken from the prechiller and chiller and passed through a DE (equivalent pore size of 0.7 μ) filtration unit to remove the suspended solids. Water from the filter is passed through an activated carbon unit, whose function is to absorb soluble material interfering with the transmission of UV light. After leaving the carbon unit, the material passes through a safety filter, whose sole function is to guarantee that no carbon or DE can leak into the chiller system. At this point, the water passes through an UV light system to kill microorganisms, through a heat exchanger for cooling, and then back into the

TABLE 7. CHARACTERISTICS OF PRECHILLER WATER AFTER TREATMENT WITH DIATOMACEOUS EARTH FILTER, ACTIVATED CARBON, AND ULTRAVIOLET LIGHT

Materials Present in Water	Existing Prechiller Water	Treated Water
BOD (mg/l)	347	157
Total solids (mg/l)	1059	732
Nonfilterable residues (mg/l)	237	6
Filterable residues (mg/l)	822	726
Oil and grease (mg/l)	89	16
Optical density (253.7 nm)	1.62 (2.4%)	0.183 (65.6%)
Total bacteria count (cells/ml)	2.5×10^4	5.32×10^0
Reduction of bacteria (%)		99.978%

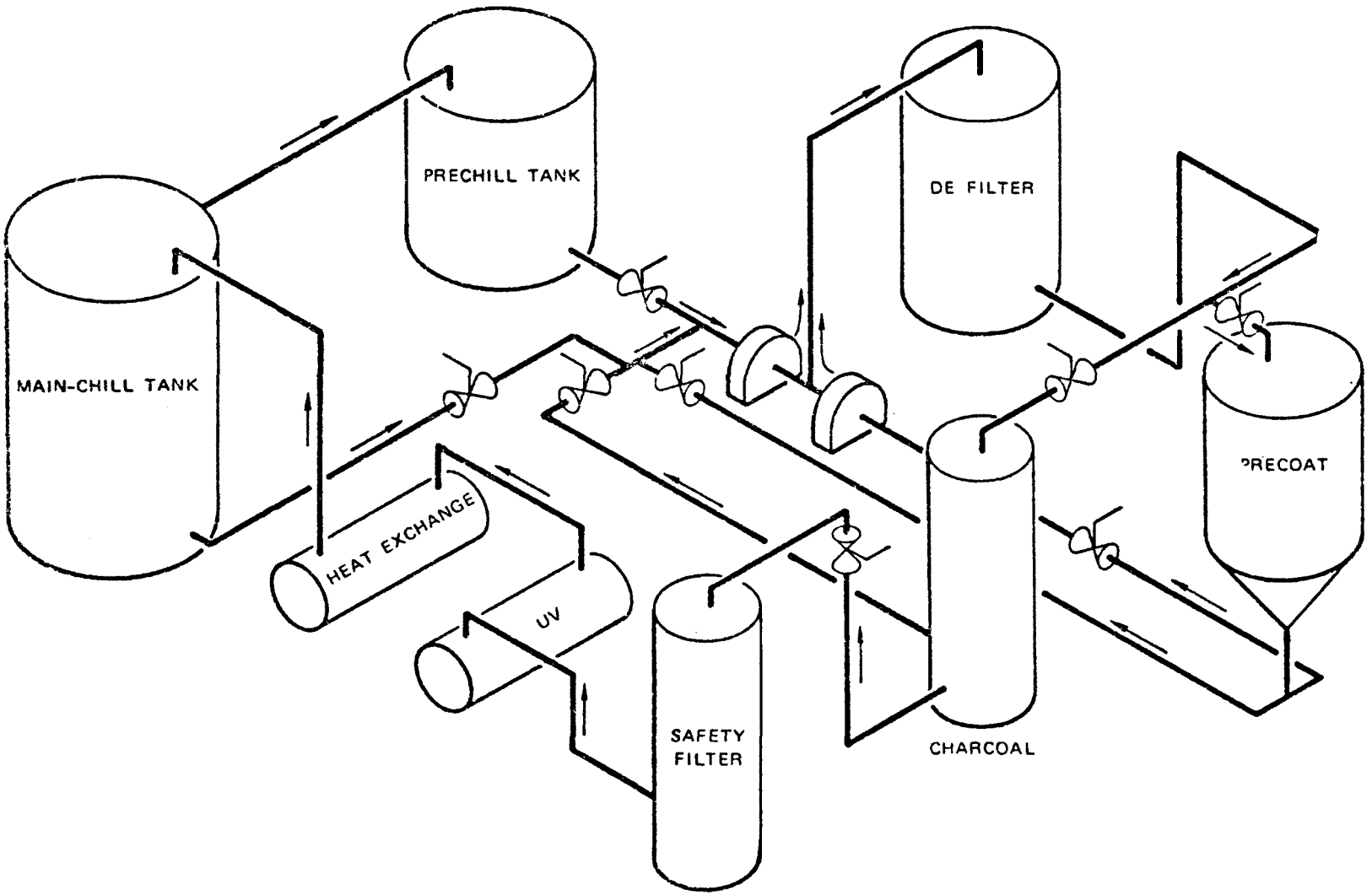

Figure 1. Poultry Chill Water treatment.

chill tank.

Table 7 shows data on prechiller water after it has passed through the DE filter, the activated carbon, and the UV light. Suspended solids (nonfilterable residue) were removed, and some soluble solids (filterable residue) were removed, the latter allowing for an increase in UV light transmission from 2.4 to 65.6%. Under these conditions, the system decreased the bacterial concentration from 25,000 cells/ml to 5.32--nearly a four-log cycle decrease. It is also of interest that the BOD was decreased from 347 mg/liter to 157 mg/liter.

Activated charcoal, to be feasible on a large scale, must be regenerated instead of discarded. Regeneration consists of heating the used material to around 400°F to burn off the absorbed materials. This requires construction of a kiln capable of handling the amounts of charcoal to be used daily, although charcoal is usually saved until enough has accrued to make regeneration convenient.

Preliminary laboratory studies were conducted to determine:

(a) The amount of activated charcoal necessary

(b) The speed with which the charcoal would remove organics.

Water from the prechiller tank at Foster Farms was run into a pilot chill system containing an activated charcoal train consisting of three tubes 1 1/2 inches in diameter and 15 inches long, containing 0.5 lb of Darco 4 X 12 activated charcoal each, as shown in Figure 2. A precoat of 0.15 lb of Hyflo Super-cel DE was applied to the filter, and a body feed of 1 gpm was maintained. Foster Farms prechiller water was allowed to enter the pilot chill tank at 0.2 gpm, and samples were taken periodically from the pilot chill tank, the DE filter output, and the output ends of each of the three carbon columns.

Table 8 shows optical density values of these samples after 4 hours of operation. As can be seen, the carbon is reducing the optical density in fairly direct relation to the amount of carbon present. The back pressure built up across the carbon train was approximately 20 psi. Reducing the particle size of the carbon would increase its efficiency, but also increase its back pressure. Figure 3 shows that the carbon is not removing absorbing compounds as fast as they are entering the system, and the amount of disinfecting light falls below the required concentration after 4 hours of operation. Using more activated carbon would possibly cure this problem, but since this system is 1/500th of the Foster Farms chill tank system, the actual amount of carbon necessary would be in excess of 7,500 lbs of activated carbon daily. It was decided at this point to investigate the possibility of using UV light of greater intensity and omitting the activated carbon, or filtering out the bacteria with a finer grade DE.

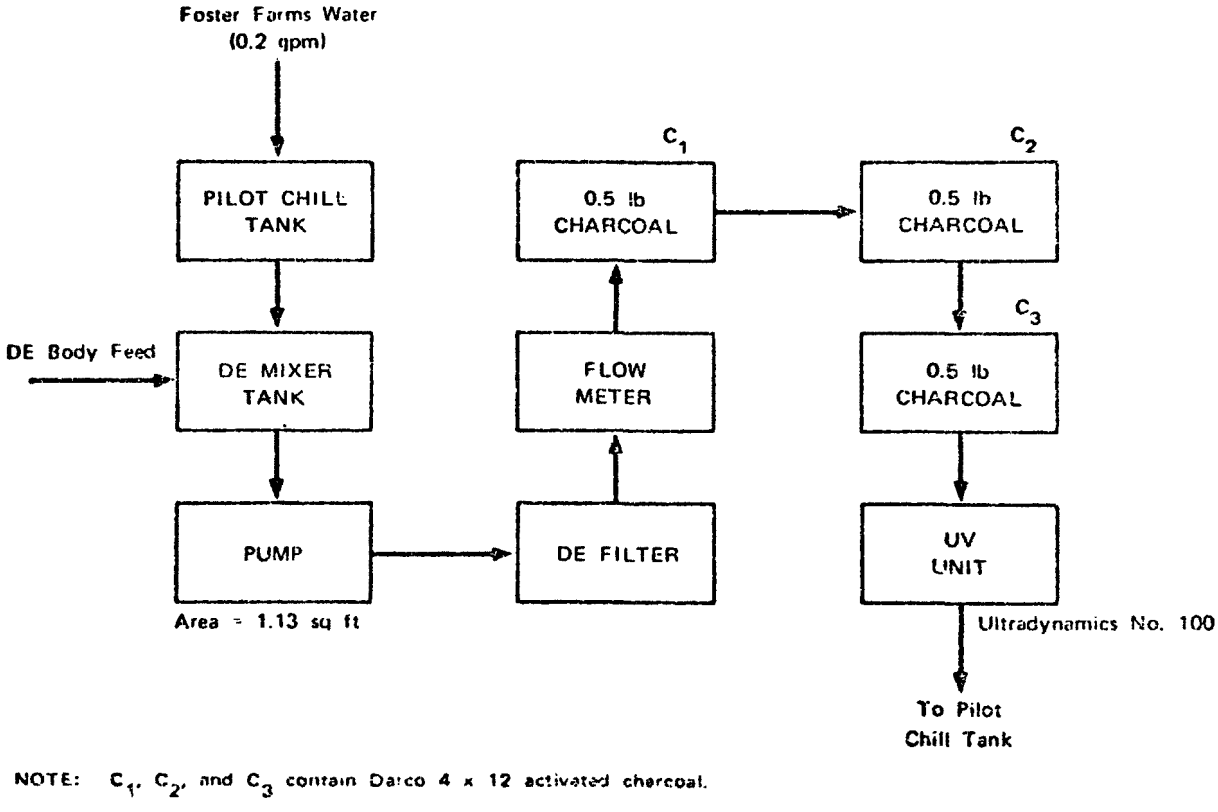

Figure 2. Pilot test for recycling poultry chilling water.

TABLE 8.

OPTICAL DENSITY OF PRECHILLER WATER AFTER TREATMENT WITH DE FILTER, ACTIVATED CARBON, AND UV LIGHT*

Sample Point	Optical Density
Pilot Chill Tank	0.612
After DE Filter	0.453
After C_1 +	0.418
After C_2 +	0.380
After C_3 +	0.366

* Data taken after 4.0 hours operation.

\+ Carbon columns.

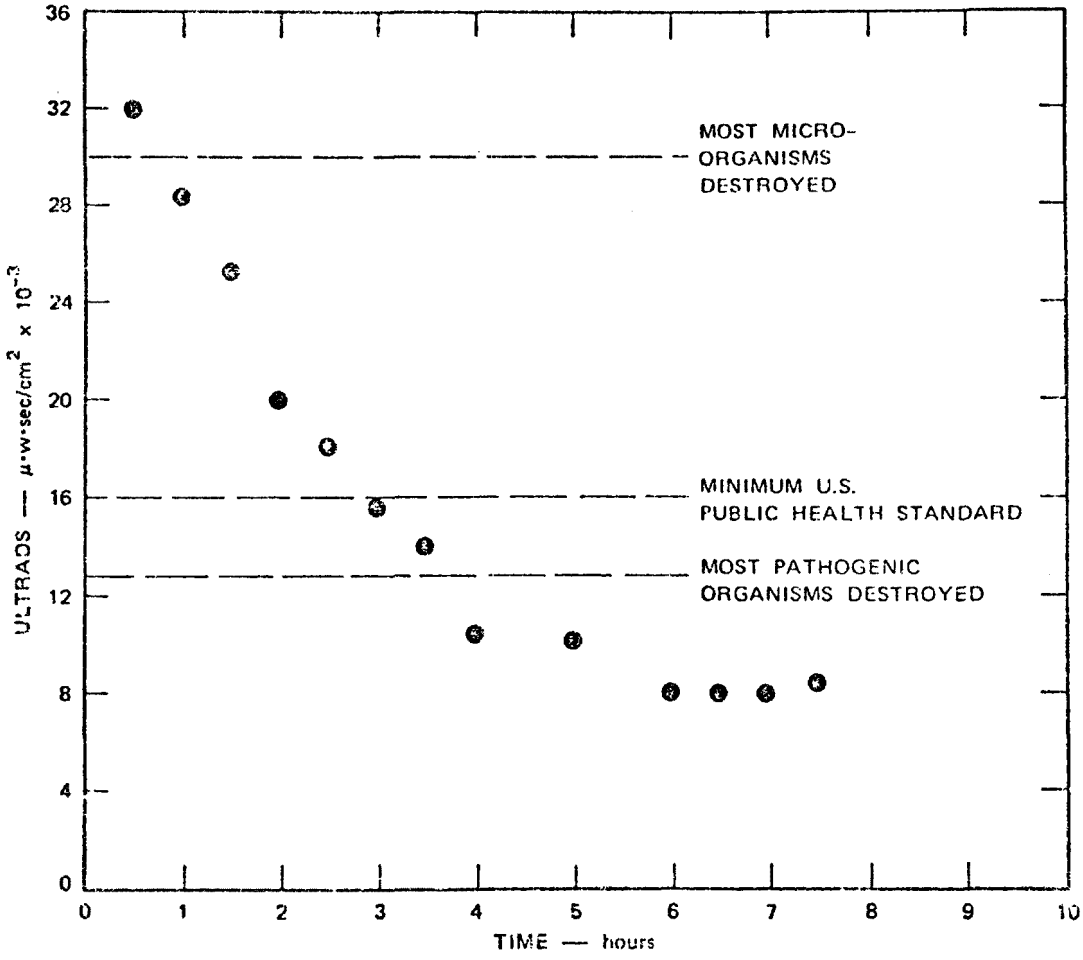

Figure 3. Ultraviolet energy versus time in pilot recycling system using activated carbon.

UV STUDIES

Since the activated carbon did not hold the absorbance down, it was decided to try to filter out the bacteria using DE of a smaller equivalent pore size; thus eliminating both the activated carbon and the UV light. During these investigations, the UV light source was increased in intensity.

A pilot chill system as shown in Figure 4 was assembled and samples taken periodically from the pilot chill tank, the DE output, and the UV light output.

After the pilot chill tank had equilibrated (approximately 1.5 hrs.), the bacteria counts (cells/ml) were averaged for each of the sample points and are shown in Table 9. As can be seen, the DE removed 99.74% of the bacteria and the UV light removed the remainder.

Based on the above results, it was decided that the added cost of using the UV units overshadowed the benefit of removing the last 0.26% of bacteria present.

STUDIES USING DE ALONE

Since the celite 512 appeared to be effectively reducing the bacterial count in the equilibrated pilot chill system with the UV light, it was theorized that if DE alone could hold the average bacterial population in the chill system below the level existing at Foster Farms, the required conditions would be met. To this end, a system was built, as shown in Figure 5, to test for these results. Samples were taken periodically from the pilot chill tank, and from a point on the output side of the DE filter.

As Table 10 shows, DE alone is capable of removing in excess of 99% of all bacteria present and will maintain the level of bacteria in the chill tank below the current level.

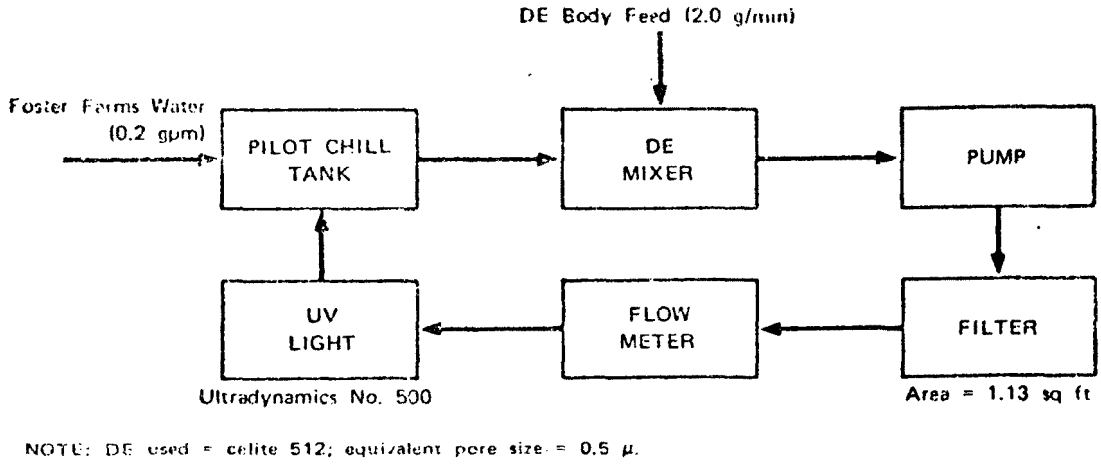

NOTE: DE used = celite 512; equivalent pore size = 0.5 μ.

Figure 4. A pilot recycling system without activated carbon.

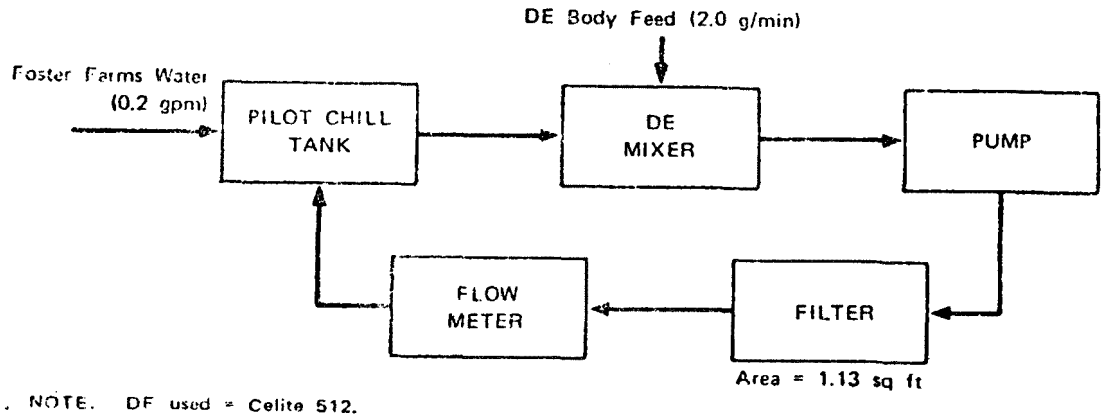

NOTE. DE used = Celite 512.

Figure 5. A pilot recycling system without activated carbon or ultaviolet light.

Table 9. BACTERIOLOGICAL RESULTS OF PILOT SYSTEM WITHOUT ACTIVATED CARBON

Sample Point	Average Total Bacteria Count (cells/ml)	Percent Reduction
Foster Farms Water	1500×10^3	
Pilot Chill Tank	381×10^3	
After DR	1×10^3	99.74%
After UV	Zero	100.00

TABLE 10. BACTERIOLOGICAL RESULTS OF PILOT SYSTEM WITHOUT ACTIVATED CARBON OR ULTRAVIOLET LIGHT

Sample Point	Average Total Bacteria Count (cells/ml)	Percent Reduction
Foster Farms water	121.5×10^3	
Pilot chill tank	79.7×10^3	
After DR	0.56×10^3	99.3%

SECTION III

SUMMARY

The specific objective of this project was to reduce the amount of water used and the effluent total solids in poultry slaughtering plants. In this study, only poultry chill water was used. Feasibility of both the technical and economical aspects of the recycling system were considered. The results should be applicable to other areas in poultry processing plants and to other food processing industries.

Data summarized in Table 11 shows the effects of recycling systems using (1) DE, (2) DE plus UV, and (3) DE plus activated carbon plus UV on total solids and total bacterial count. With systems (1), (2), and (3) the total bacterial count in the pilot chill tank, after 3 hours of operation was 73%, 33%, and 20% of the levels found in the nonrecycled system currently used. In terms of percentages, these figures may seem to be significant to a lay-man, but from a microbiological viewpoint the reductions obtained by use of activated carbon and UV light are not significantly different from that obtained by DE alone. Compared to material entering the system, the output from the recycled system shows significant reduction in total bacterial count. Since the DE system considered maintained the pilot chill tank at a bacterial level below that of the nonrecycled system, there is no need and no advantage to using expensive activated carbon and UV units.

Figure 6 depicts the proposed recycling system, which has a turbidity meter that will control two valves for recycling through the filter if DE does break through the filter leaves.

IMPACT OF PROPOSED RECYCLING SYSTEM

The real significance of the recycling system can be realized by considering that for the 11 billion pounds of poultry processed in the United States in 1970, approximately 1.5 to 2 billion gallons of water could have been saved had such a recycling system been in use. Further, approximately 4 million pounds of suspended solids and 5 to 6 million pounds of BOD would have been removed before the water was released. If we consider that these figures are for the chill system alone and that the water from the chill system represents only 5 to 6% of the water used, large savings can be realized by recycling water in other areas.

Although such figures justify recycling water in the poultry industry, further impetus can be given to such a program when energy savings are considered. The following potential energy savings can be assumed for the proposed DE filtration system:

TABLE 11. TOTAL SOLIDS AND TOTAL BACTERIAL COUNT COMPARISONS OF THREE WATER RECYCLING SYSTEMS VERSUS CONVENTIONAL SYSTEM USED IN CHILLING POULTRY

	Total Bacterial Count		Total Solids	
System	N/ml	Per Cent of Conventional	mg/liter	Per Cent of Conventional
Conventional chill tank	1.5×10^6		1032	
DE				
System output	7.9×10^3	0.5%	299	29.0%
Chill tank	1.1×10^6	73.3	386	37.4
DE + UV				
System output	0	0	357	34.5
Chill tank	5.0×10^5	33.3	410	39.7
DE + AC + UV				
System output	1.1×10^5	7.3	489	47.4
Chill tank	3.0×10^5	20.0	509	49.3

Notes: DE = Diatomaceous Earth

AC = Activated Carbon

UV = Ultraviolet light

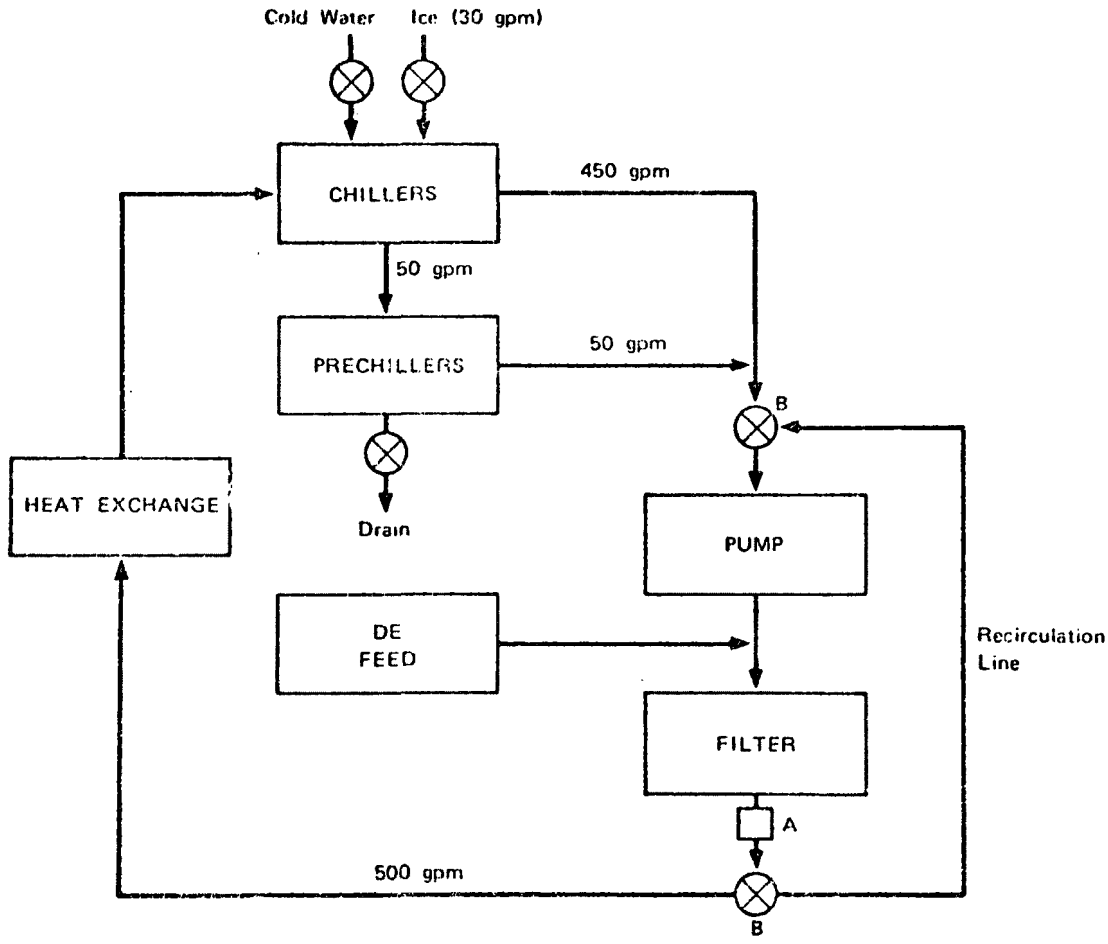

NOTE: A turbidity meter to detect pressure of DE and control valves B for safety purposes, that is, prevent DE from entering chiller.

Figure 6. Rough schematic diagram of proposed diatomaceous earth filter system.

- Well water temperature = $68^{o}F$
- Prechiller water temperature = $52^{o}F$
- Overflow in present system is 50 gpm for 18 hours
- 50% efficiency for refrigeration units
- Cost of electrical power = $0.0108/kWhr
- Chiller water temperature = $34^{o}F$
- Cost of water (in & out) = $0.13/1000 gallons
- Prechiller dumped thrice/shift
- Chiller dumped once/shift
- Chiller volume = 8,050 gallons
- Prechiller volume = 1,450 gallons
- Diatomaceous earth purchased in 10 ton lots (50-day supply) at $66/ton

Using such assumptions for the proposed system, the cost calculations outlined in the following section can be made.

Outline of Cost Calculation for Proposed Recycling System

I. Expenses in Present Chilling System that Will be Eliminated by Proposed System

A. Expense due to 100 gpm overflow.

1. Energy lost

$$\frac{100\ \text{gal}}{\text{min}} \times \frac{60\ \text{min}}{\text{hour}} \times \frac{18\ \text{hour}}{\text{day}} \times \frac{8.33\ \text{lb}}{\text{gal}} \times 16°\text{F} = 14.4\ \text{MBtu/Day}$$

(Well temp - overflow temp = 16°F)

$$\frac{14.4 \times 10^6\ \text{Btu}}{\text{Day}} \times \frac{2.928 \times 10^{-4}\ \text{kWh}}{\text{Btu}} \times 2\ \text{(efficiency factor)} = 8.45 \times 10^3\ \text{kWh/day}$$

$$\frac{8.45 \times 10^3\ \text{kWh}}{\text{Day}} \times \frac{\$0.0108}{\text{kWh}} = \$91.26/\text{Day}$$

2. Cost of Water

$$\frac{100\ \text{gal}}{\text{min}} \times \frac{60\ \text{min}}{\text{hr}} \times \frac{18\ \text{hr}}{\text{day}} \times \frac{\$0.13}{1000} = \$14.00/\text{Day}$$

B. Expense Due to Dumping Chiller (1X) and Prechiller (3X)

1. Energy lost

$$\frac{8{,}050\ \text{gal}}{\text{dump}} \times \frac{1\ \text{Dump}}{\text{day}} \times \frac{8.33\ \text{lb}}{\text{gal}} \times 34°\text{F} = 2.3\ \text{MBtu}$$

$$\frac{1{,}450\ \text{gal}}{\text{dump}} \times \frac{3\ \text{dumps}}{\text{day}} \times \frac{8.33\ \text{lb}}{\text{gal}} \times 16\pm\text{F} = 0.58\ \text{MBtu}$$

Chillers + Prechillers = 2.88 MBtu/Day

$$\frac{2.88 \times 10^6\ \text{Btu}}{\text{Day}} \times \frac{2.928 \times 10^{-4}\ \text{kWh}}{\text{Btu}} \times 2\ \text{(efficiency factor)}$$

$$\times \frac{\$0.0108}{\text{kWh}} = \$18.21/\text{Day} \times \text{two systems} = \$36.42$$

2. Cost of Dumped Water

8,050 gal + 4,350 gal = 12,400 gal

$$12{,}400\ \text{gal} \times \frac{\$0.13}{1000\ \text{gal}} = 1.61/\text{day} \times \text{two systems} = \$\ 3.22$$

C. Total Expense Incurred by Overflowing And Dumping Two Chill Systems

Overflow cost = $105.26

Dumping cost = 39.64

Total = $146.90/day

The above figure is the cost incurred by operating two complete chilling systems at 50-gpm overflow each for 18 hours. This figure also includes dumping each chiller once and dumping each prechiller three times. The dumpings made at the end of the day are not taken into account since they are also included in our proposed system.

II. Additional Cost to Operating DE Filtration System With Complete Recycling (No Overflow)

A. Cost of DE (maximum values used here)

$$\frac{400\ \text{lb}}{\text{day}} \times \frac{\$0.033}{\text{lb}} = \$13.20/\text{day}$$

B. Cost of Electrical Pumping

40hp Filter Pump
-3hp Present pumping system (estimated)
37hp Added

$$37\text{hp} \times 18\text{hr} \times \frac{0.7457\ \text{kWhr}}{\text{hp Hr}} \times \frac{\$0.0108}{\text{kWhr}} = \$5.36\ /\text{day}$$

C. Total with no overflow

Cost of DE = $13.20

Added Elect. = 5.36

Total $18.56/day

D. Total savings with no overflow

Present system = $ 146.90/day

Cost (no overflow)= 18.56

Total = $ 128.34 /day

III. Additional Cost to Operating DE Filtration System with 15 gal Equivalence of Ice per Minute to Five Needed Refrigeration that Cannot be Accomplished with Heat Exchanges.

A. Cost of DE

Same as with complete recycle = $13.20/day

B. Cost of electrical pumping same as with complete recycle =

$5.36/day

C. Energy lost with 15-gpm overflow (30 gpm considering both systems)

$$\frac{30\ \text{gal}}{\text{min}} \times \frac{60\ \text{min}}{\text{hr}} \times \frac{18\ \text{hr}}{\text{day}} \times \frac{8.33\ \text{lb}}{\text{gal}} \times 33^\circ\text{F} = 8.9\ \text{MBtu/day}$$

$$\frac{8.9 \times 10^6\ \text{Btu}}{\text{day}} \times \frac{2.928 \times 10^{-4}\ \text{kWhr}}{\text{Btu}} \times 2\ \text{(Efficiency factor)}$$

$$\times \frac{0.0108}{\text{kWhr}} = \$56.29/\text{day (overflow temperature} = 35^\circ\text{F)}$$

D. Cost of water at 30-gpm overflow

$$\frac{30\ \text{gal}}{\text{min}} \times \frac{60\ \text{min}}{\text{hr}} \times \frac{18\ \text{hr}}{\text{day}} \times \frac{\$0.13}{1000\ \text{gal}} = \$4.21/\text{day}$$

E. Total with 30-gpm overflow

Cost of DE	$13.20
Cost of electricity	5.36
Energy lost	56.29
Water cost	4.21
Total	$79.06/day

F. Total savings with 30-gpm overflow

Present system	$ 146.90
30-gpm cost	79.06
Total	$ 67.84/day

Please note that manpower and equipment costs have been omitted. The system will require constant attention during its check-out period, but can easily be made semi-automatic. Total manpower requirements, should not exceed six hours per day.

Other factors such as the sewage treatment cost savings from the reduced BOD in the effluent water and the reduction of bacteria in the chill tank system cannot be put into monetary terms at this time.

APPENDIX

CONVERSION FACTORS
English to Metric

English Unit	Abbrev.	Multi.	Abbrev.	Metric Unit
cents per thousand gal.	¢/1,000 gal.	0.264	¢/1,000 l	¢ per M liters
cubic foot	cf	28.32	l	liter
cubic inch	cu in.	16.39 0.0164	cu cm l	cubic centi. liter
degree Fahrenheit	deg F	0.555 F-32°	deg C	degree Celsius
feet per second	fps	0.305	m/sec	meters per sec.
foot(feet)	ft	0.305	m	meter(s)
gallon(s)	gal.	3.785	l	liter(s)
gallons per day	gpd	4.381×10^{-5}	l/sec	liters per sec.
gallons per minute	gpm	0.0631	l/sec	liters per sec.
horsepower	hp	0.746	kw	kilowatts
inch(es)	in.	2.54	cm	centimeter
parts per million	ppm	1.0	mg/l	mill. per liter
pound(s)	lb	0.454 453.6	kg g	kilogram grams
pounds per square in.	psi	0.0703	kg/sq cm	kilo. per sq. centimeter
square inch	sq in.	6.452	sq cm	sq. centimeter
ton(short)	ton	907.2 0.907	kg metric ton	kilogram metric ton

TECHNICAL REPORT DATA
(Please read Instructions on the reverse before completing)

1. REPORT NO. EPA-600/2-78-039	2.	3. RECIPIENT'S ACCESSION NO.
4. TITLE AND SUBTITLE RECYCLING OF WATER IN POULTRY PROCESSING PLANTS		5. REPORT DATE March 1978 issuing date
		6. PERFORMING ORGANIZATION CODE
7. AUTHOR(S) Rogers, C. J.		8. PERFORMING ORGANIZATION REPORT NO.
9. PERFORMING ORGANIZATION NAME AND ADDRESS Stanford Research Institute Menlo Park, CA 94025		10. PROGRAM ELEMENT NO. 1BB037
		11. CONTRACT/GRANT NO S-800930
12. SPONSORING AGENCY NAME AND ADDRESS Industrial Environmental Research Laboratory-Cin, OH Office of Research and Development U.S. Environmental Protection Agency Cincinnati, Ohio 45268		13. TYPE OF REPORT AND PERIOD COVERED Summary
		14. SPONSORING AGENCY CODE EPA/600/12
15. SUPPLEMENTARY NOTES		

16. ABSTRACT

Studies were conducted on recycling chiller water in a poultry processing plant. The recycling system must be provided with the capability of removing solids and controlling the microbial population.

UV was used to control the microbial population. For this control to be effective, solids must be removed to a level to allow light transmission. Methods studied include: 1) cyclonic desludgers, 2) vibrating screens, 3) flotation cells, 4) centrifugal waste concentration, 5) filtration with diatomaceous earth (DE) filter aid, and 6) activated carbon.

Pilot-scale results showed that DE filtration was the most feasible option and that it maintained the bacterial level below that of the nonrecycled system.

Operating costs for the DE filtration system with 30 gallons equivalence of ice per minute are $79.06/day. Normal operating costs of the chiller without recycle are $146.90/day, thus a savings of $67.84/day. These do not include manpower and equipment costs. Figures are calculated based on a system that overflowed 100 gpm for an 18 hour day.

17. KEY WORDS AND DOCUMENT ANALYSIS

a. DESCRIPTORS	b. IDENTIFIERS/OPEN ENDED TERMS	c. COSATI Field/Group
Industrial Water, Water Consumption, Circulation, Disinfection, Filtration, Diatomaceous Earth, Industrial Wastes, Poultry Meat	Poultry Processing Wastes, Recycling, Chiller Water, Solids Removal, Ultraviolet.	68C 68D

18. DISTRIBUTION STATEMENT Release to Public	19. SECURITY CLASS *(This Report)*	21. NO. OF PAGES 37
	20. SECURITY CLASS *(This page)*	22. PRICE

EPA Form 2220-1 (9-73)