EPA-660/2-73-032
January 1974

Environmental Protection Technology Series

Sulfuric Acid and Ferrous Sulfate Recovery From Waste Pickle Liquor

Office of Research and Development
U.S. Environmental Protection Agency
Washington, D.C. 20460

RESEARCH REPORTING SERIES

Research reports of the Office of Research and Monitoring, Environmental Protection Agency, have been grouped into five series. These five broad categories were established to facilitate further development and application of environmental technology. Elimination of traditional grouping was consciously planned to foster technology transfer and a maximum interface in related fields. The five series are:

1. Environmental Health Effects Research
2. Environmental Protection Technology
3. Ecological Research
4. Environmental Monitoring
5. Socioeconomic Environmental Studies

This report has been assigned to the ENVIRONMENTAL PROTECTION TECHNOLOGY series. This series describes research performed to develop and demonstrate instrumentation, equipment and methodology to repair or prevent environmental degradation from point and non-point sources of pollution. This work provides the new or improved technology required for the control and treatment of pollution sources to meet environmental quality standards.

For sale by the Superintendent of Documents, U.S. Government Printing Office, Washington, D.C. 20402 - Price $1.20

EPA-660/2-73-032
January 1974

SULFURIC ACID AND FERROUS SULFATE RECOVERY FROM WASTE PICKLE LIQUOR

By

Joseph K. Seyler
William E. Thornton
Michael K. Householder, PhD

Project 12010 FNM
Program Element No. 1B2036

Project Officer

James H. Phillips
Office of Research and Development
U. S. Environmental Protection Agency
One North Wacker Drive
Chicago, Illinois 60606

Prepared for
OFFICE OF RESEARCH AND DEVELOPMENT
U. S. ENVIRONMENTAL PROTECTION AGENCY
WASHINGTON, D. C. 20460

ABSTRACT

A bath bar pickler and a bath rod pickler are used for cleaning 40,000 tons per year of cold-rolled steel using sulfuric acid at the Fitzsimons Steel Company's Youngstown, Ohio plant. Prior to this project the plant produced up to 55,000 gal/month of spent liquor containing up to 5 percent of free sulfuric acid and up to 0.85 lbs/gallon of iron and 4800 gal/day of rinse water containing 2,400 ppm of free acid and 24,000 ppm of $FeSO_4$ at a pH of 5.

A facility for the treatment of the spent pickle liquor including rinse water was installed based on the vacuum crystalization process of Keram Chemi-Lurgi. This process recovers ferrous sulfate heptahydrate as a nearly dry solid by-product and recovers the unreacted acid for recycle to the pickling tank thus eliminating the discharge of spent pickle liquor and rinse water. This report describes the investigation of process variables and the demonstration of the process at full scale.

The full scale facility achieved acid recoveries equivalent to 21.2 tons/day of 12% sulfuric acid for recycle and an average of 115 lbs/hour of 99.56% $FeSO_4 \cdot 7H_2O$ by-product. Capital costs were $191,710 or $19,739/year based on a fifteen year life at 6% interest. Net operating costs were $42,320/year including a $21,400/year benefit from acid recovery. (No credit of $2,300/year of ferrous sulfate heptahydrate was included due to the nationwide excess production over market absorbing ability). The total costs were $62,059/year, $1.75/ton of steel pickled, 0.614 ¢/$ total sales, or $12.93/cubic meter of wastes treated.

This report was submitted in fulfillment of Project 12010 FNM under the partial sponsorship of the Enviromental Protection Agency. Work was completed as of December 1972.

Key Words: Sulfuric acid, Spent pickle liquor, Ferrous Sulfate heptahydrate, Acid recovery, Crystallization, Centrifugation.

CONTENTS

		Page
Abstract		ii
List of Figures		v
List of Tables		vi
Acknowledgements		viii
Sections		
I	Conclusions	1
II	Recommendations	3
III	Introduction	4
	A. The Magnitude of the Problem; Number and Geographical Distribution of Pickling Plants	4
	B. Estimate of the Pollution Load Due to Sulfuric Acid Pickling Operation	4
	C. Processes Available for Treating Sulfuric Acid Pickle Liquor	6
IV	The Problem at the Fitzsimons Steel Plant	8
	A. Steps Taken by the Fitzsimons Steel Company	8
	B. Benefits from the Acid Regeneration	10
V	Basic Design Criteria	19
VI	Rinse Water Studies	27
VII	Market Survey of Ferrous Sulfate	37
VIII	Exploratory Program to Evaluate the Conversion of Ferrous Sulfate to Other Products	40
	A. Chemical Analysis of the Recovered Ferrous Sulfate Heptahydrate	40
	B. Conversion to Other Products	42
	1. Fused Magnetite and Sulfuric Acid	42
	2. Ferrous Sulfate Roasting - Contact Sulfuric Acid Plant	42

Sections		Page
IX	Economic Estimates	45
	A. Capital Costs	45
	B. Normal Operation	45
	C. Special Operation	45
	D. Cost Summary	49
	E. Resource Utilization	49
X	References	54
XI	Appendix	55
	A. Operating Records	55
	B. Market Survey on Ferrous Sulfate	55
	1. Introduction	55
	2. Objectives and Procedural Steps	55
	3. National Markets	59
	a) Producers	60
	b) Market Segmentation	61
	4. Local Markets	62
	a) Market Segments	63
	b) Testing Programs	68
	5. Other Sales Factors	70

FIGURES

NO.		PAGE
1	Distribution of Steel Finishing Plants	5
2	Outline of Fitzsimons Batch Pickling Operation Prior to Acid Recycle and Iron Recovery Process	9
3a	Equipment Diagram of Acid Recycle Plant	11
3b	(continued)	12
4	Overall View of Acid Recycle and Iron Recovery Building	13
5	Instrument Panel of Acid Recycle and Iron Recovery System	14
6	Recycled Acid Holding Tank	15
7	Pre-cooler and Cooling Crystallization	16
8	Steam Ejectors with Condensing Units	17
9	Centrifugal Thickener and Centrifuge	18
10	Ferrous Sulfate in Aqueous Sulfuric Acid Solutions	26
11	Total Iron vs. Time for Bar Mill Rinse Water	30
12	Ferrous Iron vs. Time for Bar Mill Rinse Water	31
13	Ferric Iron vs. Time for Bar Mill Rinse Water	32
14	Sulfate vs. Time for Bar Mill Rinse Water	33
15	Acid Recycle System with Rinse Water to Waste	35
16	Acid Recycle System Treating Rinse Water	36

TABLES

NO.		PAGE
1	Ferrous Sulfate Monohydrate Dissolution in Sulfuric Acid Solutions (0°C-60°C)	20
2	Ferrous Sulfate Monohydrate Dissolution in Sulfuric Acid Solutions (80°C-100°C)	21
3	Ferrous Sulfate Heptahydrate Dissolution in Sulfuric Acid Solutions	22
4	Transition Points of Ferrous Sulfate in Sulfuric Acid Solutions	23
5	Ferrous Sulfate Monohydrate Dissolution in Sulfuric Acid Solutions (Interpolated)	24
6	Ferrous Sulfate Heptahydrate Dissolution in Sulfuric Acid Solutions (Interpolated)	25
7	Summary of Rinse Water Use	29
8	Rinse Water Pollution Prior to Treatment	34
9	Analysis of A Salt Sample Identified as "Ferrous Sulfate Heptahydrate"	43
10	Comparison of Recovered Salt with Theoretical Ferrous Sulfate Heptahydrate	44
11	Capital Expenses for the Acid Recycle and Iron Recovery Process	46
12	Operating Benefits and Costs for Normal Operation (Salt Asset)	47
13	Operating Benefits and Costs for Normal Operation (Salt Liability)	48
14	Operating Benefits and Costs for Special Operation	50
15	Cost Summary	51
16	Resources Utilization for Normal Operation	52

Tables Con't.

NO.		PAGE
17	Resources Utilization for Special Operation	53
18	Operating Consumptions of the Acid Recycle and Iron Recovery Plant	56
19	Production, Shipment, and Dollar Value of Ferrous Sulfate "Commercially Produced"	59
20	Commercial Producers of Ferrous Sulfate	60
21	Distribution of Ferrous Sulfate Consumers	61
22	Current Usage and Relative Market Potential of Ferrous Sulfate in the Youngstown, Ohio Trading Area	64

ACKNOWLEDGEMENTS

The authors would like to acknowledge the following people for their help: Mr. Fred Proverbs of Keram Chemie, (Canada) and Mr. Ernie Rudi of Lurgi, (Germany) for the installation and startup of the Acid Recycle and Iron Recovery process; Dr. John D. VanNorman, Associate Professor of Chemistry at Youngstown State University for his chemical analysis; Mr. Richard Andres of Marketing Service Associates, Inc. for the Market Survey of Ferrous Sulfate Heptahydrate; and finally Mr. Robert L. Feder, Office of Solid Waste Management Programs, Environmental Protection Agency, Cincinnati, Ohio and Mr. James H. Phillips, Office of Research and Development, Region V, Environmental Protection Agency, Chicago, Illinois, Project Officers for the Environmental Protection Agency.

SECTION I

CONCLUSIONS

This project clearly demonstrates the ability to recycle waste sulfuric acid pickle liquor by recovering sulfuric acid and ferrous sulfate heptahydrate.

A. Operations

1. The raw waste loads were reduced from 40 pounds of free acid and 400 pounds of $FeSO_4$ per ton of steel pickled, discharged as spent pickle liquor, to no discharge of spent pickle liquor.

2. The Treatment facility recovered the equivalent of 21.2 tons/day of 12% H_2SO_4, formerly discharged as spent pickle liquor, for recycle to the pickling tanks.

3. The facility recovers 1 ton/day of ferrous sulfate heptahydrate as a nearly solid by-product which was formerly discharged as $FeSO_4$ in the spent pickle liquor.

4. With pre-evaporators installed on the rinse water system and more efficient rinsing the 1.1 pounds of free acid and 11 pounds of $FeSO_4$ per ton of steel pickled will be recovered with no discharge.

B. Economics

1. Capital costs for a design capacity of 316 gal/hour (1.2 cubic meters/hour) of waste pickle is $19,100/year based on a 15 year amortization at 6% interest.

2. Operating costs were $42,320/year, taking credit for the value of the acid recovered.

3. Total plant costs were $61,420/year.

4. Total costs are $1.73/ton of steel produced.

5. Total costs are 0.605¢/$ total sales.

6. Total costs are $12.79/cubic meter waste treated

C. Rinse Water Studies

1. Rinse water studies indicate that if the present rinse water

volumes of 298 gallons/hour were reduced to 4 gallons/hour with the use of pre-evaporators they could be treated with the Acid Recycle and Iron Recovery System.

2. Methods are available for heating pickle tanks without dilution thereby reducing the volume contribution to the system.

3. Rinse water volumes can be reduced by more efficient rinsing techniques.

D. Market Survey of Ferrous Sulfate Heptahydrate

1. The national market for ferrous sulfate is in a glutted condition. Production capacity far exceeds demand.

2. The Fitzsimons product has been shown to be certified reagent grade by an analysis of the product. That is to say, the material apparently can compete for markets with commercially produced ferrous sulfate and is far superior to the spent pickle liquor type of ferrous sulfate generated by many steel mills.

3. The local market (75 mile radius) for ferrous sulfate is currently negligible. Very little is now being used in any of the various potential end-use markets.

4. Even though the market (current use) is negligible, the prospects for selling the Fitzsimons ferrous sulfate within the local trading area appears to be quite good. This is because the product is purified more than the normal type of ferrous sulfate spent pickle liquor and can be priced well within current pricing schedules.

5 Nine firms and/or cities are currently testing the product with the Mahoning Valley Sanitary District, the most genuinely interested based on their tests at the time of this writing.

E. Exploratory Program for Conversion of Ferrous Sulfate Hyptahydrate

1. The ferrous sulfate heptahydrate recovered is of very high quality.

2. There are methods available for converting this salt to magnetite and sulfuric acid.

SECTION II

RECOMMENDATIONS

A. Rinse Water

1. Install pickle tank heaters that do not dilute the pickle liquor.

2. Reduce dragout volumes by allowing the pickle liquor to drain off steel while suspended above pickle tank.

3. Install a more efficient rinsing system by the use of rinse jets, etc.

4. Install a pre-evaporator to reduce the volume of rinse water.

5. Feed the condensed rinse water to the acid recycle and iron recovery plant.

6. Seek other rinse water treatments as an economic alternate.

B. Ferrous Sulfate Heptahydrate

1. Fitzsimons should not attempt to enter the chemical market on a "commercial" basis in order to move the ferrous sulfate. The investment required in further processing equipment, packaging equipment, establishment of engineering and sales capacilities, etc. would far exceed any gross profit that could be realized in the sale of such a relatively small output (110 tons per month).

2. Fitzsimons should actively follow the nine prospective customers who have testing and sampling programs currently under way. It is entirely within the realm of possibility that one or several of these firms and/or cities will be interested in absorbing at least part of the output.

3. If none of the current testing programs result in any action, lists of chemical distributors and all city water and sewage facilities within a 75 mile area should be compiled, and each party on the list should be contacted either by phone or letter, and followed up with a sample and chemical analysis of the material. Whether or not the material can be effectively used in a process is usually known only after tests are run.

C. Economics

1. The plant should be operated at 1.2 cubic meters/hour.

SECTION III

INTRODUCTION

A. The Magnitude of the Problem; Number and Geographical Distribution of Pickling Plants

The problem of the disposal of spent pickle liquor is widespread throughout the steel industry, especially in plants where finishing operations such as cold-rolling, drawing, extrusion, and surface coatings are employed. Large primary iron and steel producers may carry out integrated operations through such finishing steps as cold-rolling, wire-drawing, galvanizing, tin-plating, extrusion, etc., all of which require at some stage surface cleaning by pickling. There are numerous nonintegrated smaller plants throughout the country which convert hot-rolled steel procured from primary finishers to some finished produce (cold-rolled rods, wires, bars, coating sheets, etc.) by processes involving preliminary pickling. Figure 1 shows the geographical distribution of steel plants with 20 or more employees in the United States which perform such operations. One hundred and sixty nine plants are shown under the category SR Steel works and rolling mills--standard industrial code (SIC) 3312 with most of them employing 500 or more. From a review of the types of operations specified for these plants it is estimated that perhaps 100 of them do some kind of pickling. There are 92 plants shown in the category WD (steel wire drawing and nails--not integrated, SIC 3315). These may or may not do pickling, depending on the nature of the starting material. It is believed, however, that many of these plants use hot rolled raw materials and consequently must incorporate pickling in their process. Category CR (cold steel finishing mills--not integrated, SIC 3317) including the Fitzsimons Steel Company consists of 88 plants throughout the country. It is believed that acid pickling is the general practice in this segment of the industry. The plants in the category PT (steel pipe and tubes, not integrated, SIC 3317) of which there are 157 in the country also may or may not pickle, depending on the type of raw material and on the uses for their product. It is believed, however, that the majority of the pipe and tubing plants in the category G (galvanizing and other coating, SIC 3479) also may or may not pickle, depending on the type of raw material. It is believed, however, that many of these, possibly up to one half, do some form of acid pickling.

Figure 1 indicates only those plants employing 20 or more personnel. In addition to these, there are many smaller plants, with less than 20 employees in each of the designated categories, many of which also may produce waste pickle liquor.

B. Estimate of the Pollution Load Due to Sulfuric Acid Pickling Operation

According to the FWPCA estimates (1967) the waste load generated by sulfuric acid pickling plants in 1968 would contain about 225,000 tons of

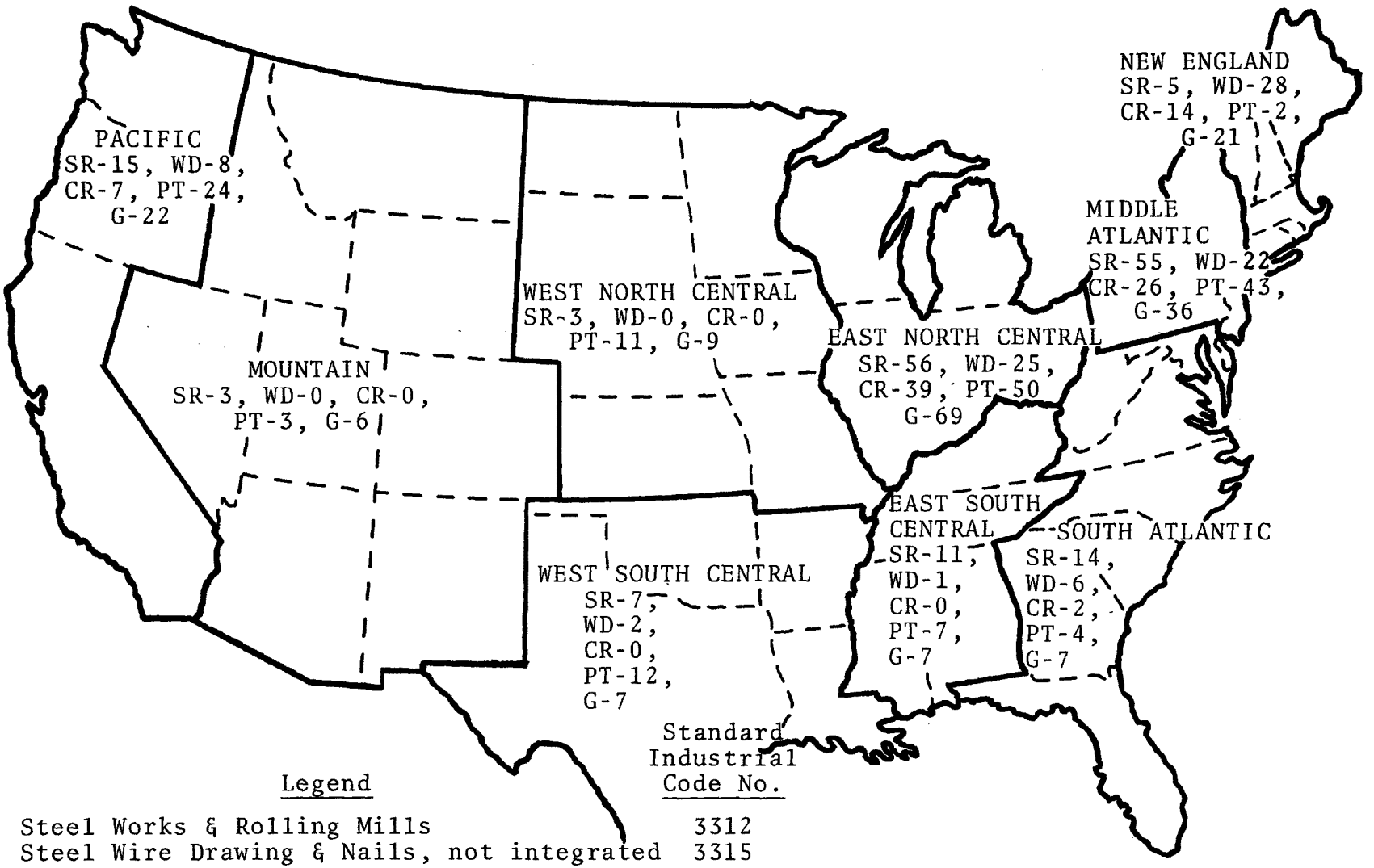

Legend	Standard Industrial Code No.
Steel Works & Rolling Mills	3312
Steel Wire Drawing & Nails, not integrated	3315
Cold Steel Finishing Mills, not integrated	3316
Steel Pipe and Tube, not integrated	3317
Galvanizing & Other Coating	3479

FIGURE 1 Distribution of Steel Finishing Plants

free sulfuric acid and about 830,000 tons of ferrous sulfate. These estimates are consistent with later data which show that the sulfuric acid consumption by the steel industry in 1968 was about 800,000 tons.

Calculations based on the consumption figures and on typical analyses of spent pickle liquors indicate that about 200,000 tons of free sulfuric acid and close to 900,000 tons of ferrous sulfate were discharged from pickling plants in 1968.

On an average, in 1968, 85 percent of the sulfate components--about 200,000 tons of free sulfuric acid and about 700,000 tons of ferrous sulfate--were discharged in the form of concentrated spent pickle liquor, containing about 60 grams/liter of free sulfuric acid and about 250 grams per liter of ferrous sulfate. The remainder--15 percent, or about 30,000 tons of free sulfuric acid and about 125 tons of ferrous sulfate--was sent to waste in rinse water streams, considerably more dilute than the spent pickle liquor. The composition is dependent on the dragout rate and the quantity of rinse water used which could be expected to vary considerably depending on the type of material being pickled and plant practice. Typically, rinse water contains sulfuric and ferrous sulfate in the concentration range of a few hundred parts per million to a few grams per liter.

From the plant distribution data shown in Figure 1, the greatest concentration of plants engaged in pickling exists in the most urbanized areas of the country, particularly in the East, North, Central, and Middle Atlantic States. It is in these areas that the maintenance of adequate water quality for public water supply, recreation, aquatic life, and aesthetic value is becoming increasingly difficult.

Despite the fact that other methods of surface cleaning (such as hydrochloric acid pickling, shot blasting, etc.) may supplant to some extent the sulfuric acid pickling process, there is no indication that the quantity of waste free sulfuric acid and ferrous sulfate will be reduced below its present level. On the contrary, estimates made by FWPCA (1967) indicate that, in 1972, the sulfate waste load from steel mills will be about 10 percent greater than in 1968.

C. Processes Available for Treating Sulfuric Acid Pickle Liquor

The methods or processes available for the disposal of spent sulfuric acid pickle liquor may be classified as follows:

(1) Disposal of the untreated liquor either to deep wells, abandoned limestone quarries, or evaporative lagoons; or by controlled flow (proportionation) to natural water bodies. This last, which was in wide use in the industry, is now being phased out by tighter government restrictions and enforcement.

(2) Neutralization and the precipitation of iron by lime with or without oxidation. This process requires subsequent impounding of the liquor to permit solids-liquids separation. Acceptably pure aqueous effluents can be obtained but the process requires relatively large land-areas for lagooning and results in the formation of a sometimes troublesome sludge. Large steel companies and contract disposal companies have employed this process. While the process requires little capital investment, operating costs may be high.

(3) Various types of processes (differential solubility, evaporation, refrigeration) all aimed at selectively removing ferrous sulfate from the spent liquor and recovering free sulfuric acid. The Keram-Chemie-Lurgi process, which Fitzsimons has adopted, is one of several commercially developed processes of this type. The advantages of such processes are that they completely "bottle up" the plant, producing no water-borne pollutants, recover a significant proportion of the free sulfuric acid still present in spent liquor, and produce a ferrous sulfate by-product, which, under certain circumstances, may constitute an economic credit.

(4) Electrolytic-type processes to recover high-purity iron and sulfuric acid. Such processes have received considerable attention and have been rather thoroughly developed. As far as is known, the electrolytic processes are not being used commercially.

(5) Miscellaneous methods which involve the conversion of the ferrous sulfate content to iron oxide, ferric sulfate, ferric chloride, or sodium sulfate by various chemical methods. None of these has achieved commercial success.

The problem of the disposal of spent pickle liquor has been formidable, so much so that in recent years attention has been focused on hydrochloric acid pickling. The spent liquor from hydrochloric acid pickling, unlike that from sulfuric acid pickling, may be processed to yield a high-grade iron oxide product and to regenerate the acid. Regenerative hydrochloric acid pickling processes are now in commercial operation at a number of the larger steel plants in the United States. A thorough assessment of their economic and technical advantages and disadvantages has yet to be completed. More widespread use of this process is anticipated, but it will probably not be economic for the smaller plants generating less than 10 to 20 gpm of spent liquor.

SECTION IV

THE PROBLEM AT THE FITZSIMONS STEEL PLANT

The Fitzsimons Steel Company of Youngstown, Ohio produces about 40,000 tons per year of cold-rolled steel bars, rods, and coils from purchased hot-rolled stock. In the cold-rolling processes, preliminary acid pickling is required to remove mill scale, rust, dirt, grease, etc., from the feed stock. The Company operates two pickling lines--one for the bars, the second for the coiled rods. Figure 2 is a diagram of the operation.

As shown in the diagram, the major waste is the combined spent liquors from the two pickling lines. This amounts to approximately 55,000 gallons per month of a solution containing up to 5 percent free sulfuric acid and about 0.8 pound per gallon of iron, dissolved as iron sulfate. This is equivalent to a monthly pollution load of about 17 tons of free sulfuric acid and 22 tons of iron. The combined waste solution is proportioned at a controlled slow rate into a nearby run which, in turn, discharges into the Mahoning River.

On the basis of comparative tonnages, considering that the total tonnage of cold rolled bars and rods in the United States is approximately 20,000 tons per year and that the Fitzsimons production is 40,000 tons per year--the total pollution load chargeable against just this segment of the industry is annually about 100,000 tons of free sulfuric acid and about 130,000 tons of ferrous sulfate. As can be seen from Figure 1, this segment of the industry is concentrated in the populous areas of the country.

Studies made by the State of Ohio Department of Health have indicated that controlled discharge without neutralization and precipitation of spent pickle liquors is incompatible with its aim of maintaining water quality in the Mahoning River and, as indicated previously, directed the Fitzsimons Company to seek other methods of treatment and disposal.

A. Steps Taken by the Fitzsimons Steel Company

In March, 1968 the State suggested that the Company investigate the possibility of contracting with some outside organization to haul away the waste pickling acid, neutralized and disposed or in such a fashion that harmful pollution would not occur. Fitzsimons explored this suggestion and concluded that the cost of disposal by contract haulage and neutralization would be economically prohibitive.

Company executives also surveyed a number of other possible disposal methods and after careful consideration, involving inspection tours to operating commercial-scale European installations, decided that the Keram Chemie-Lurgi Sulfuric Acid Regeneration Process appeared to be the most suited for their needs.

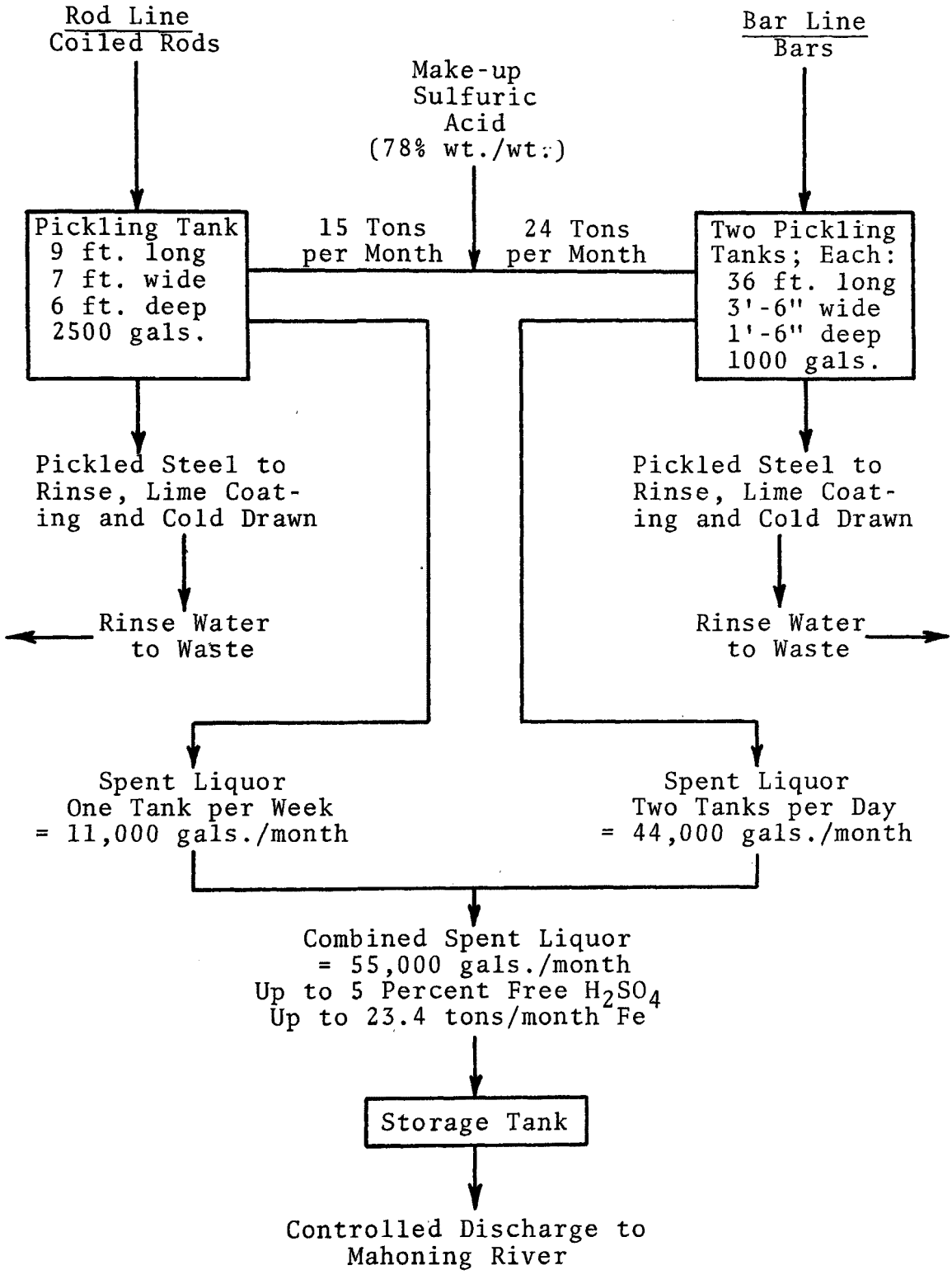

FIGURE 2 Outline of Fitzsimons Batch Pickling Operation Prior to Acid Recycle and Iron Recovery Process

After having obtained approval of the process by the State of Ohio Department of Health in February, 1969, the Company undertook negotiations with Keram Chemie for the purchase of a treatment plant.

B. Benefits from the Acid Regeneration

The installation and successful operation of this plant has a twofold effect. Most importantly, it completely eliminates the pollution load due to spent pickling baths that Fitzsimons has been sending to the Mahoning River over the past 50 years, a load which within the next few years would be even greater. Secondly, certain economic advantages were realized from the recovery of sulfuric acid and possibly the sale of by-products. These advantages have been shown to be real and significant; thus, a practical and economical avenue to the abatement of a serious pollution problem has been demonstrated, and a stimulation provided for other companies to follow suit.

The Keram Chemie-Lurgi Sulfuric Acid Regeneration Plant has been generally described in various Keram Chemie Corporation brochures. A flow and equipment diagram of the operation as it is applied to the Fitzsimons waste is shown in Figure 3. Figure 4 is an overall view of the Acid Recycle and Iron Recovery Plant. Figures 5 through 9 present the various components of the system.

Although no Keram Chemie-Lurgi plants have been installed in this country, the process is being applied successfully in Germany, France, Denmark, and South Africa. At least 11 Keram Chemie-Lurgi installations are not in operation, treating the waste liquors from steel mills producing wire, strip, bars, pipes, and other shapes at capacities ranging from 2000 to 10,000 tons per month. Production capacity of the Fitzsimons Steel Company is about 4000 tons per month.

Keram Chemie has guaranteed the plant to operate at the capacity about 50 percent in excess of Fitzsimons present pickle liquor output and has also guaranteed the serviceability of materials, and operability of the plant. The contract between Keram Chemie and Fitzsimons was on "turn-key" basis and Keram Chemie installed, started up and brought the plant into proper operation.

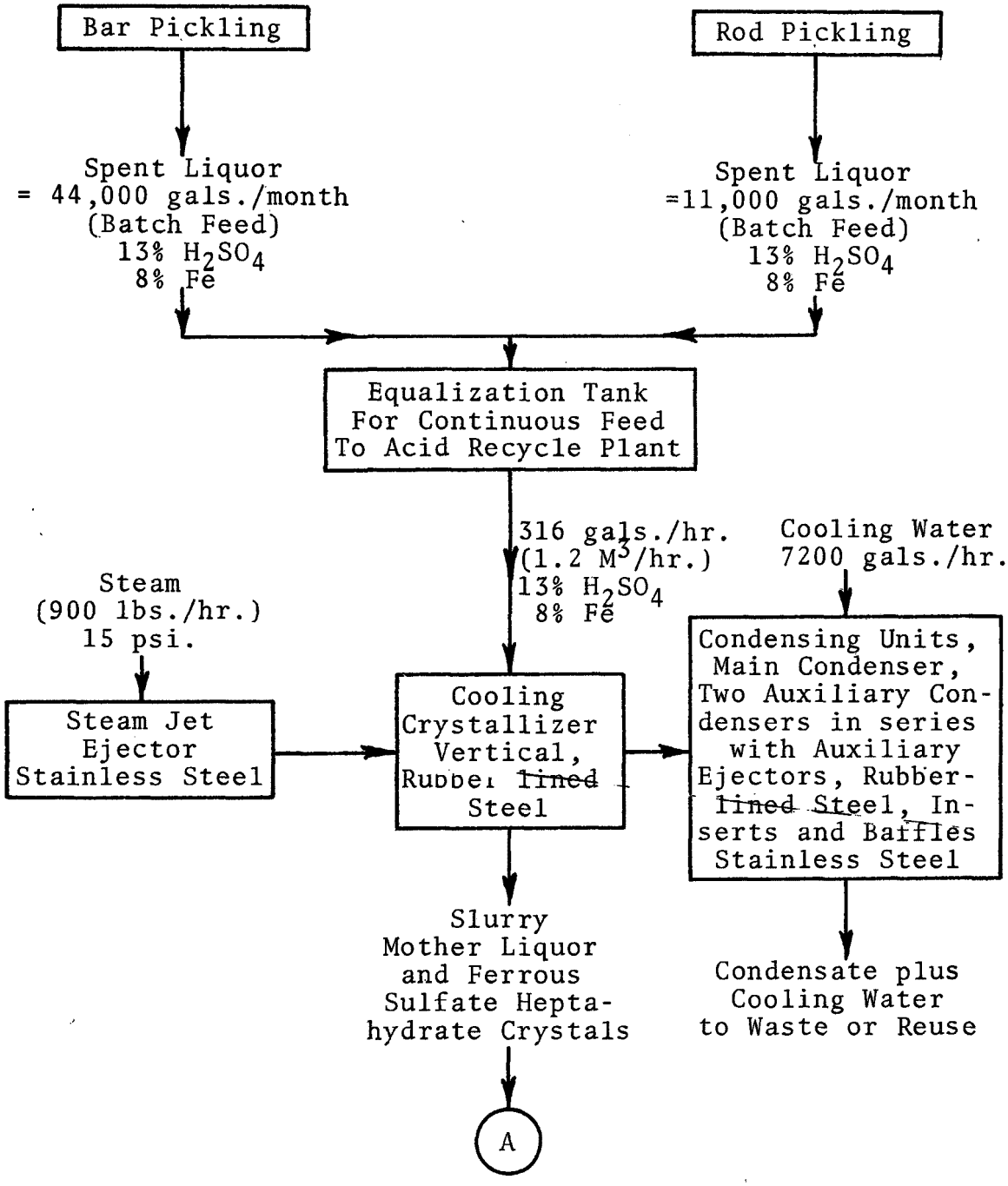

(Continued on page 13)

FIGURE 3A Equipment Diagram of Acid Recycle Plant

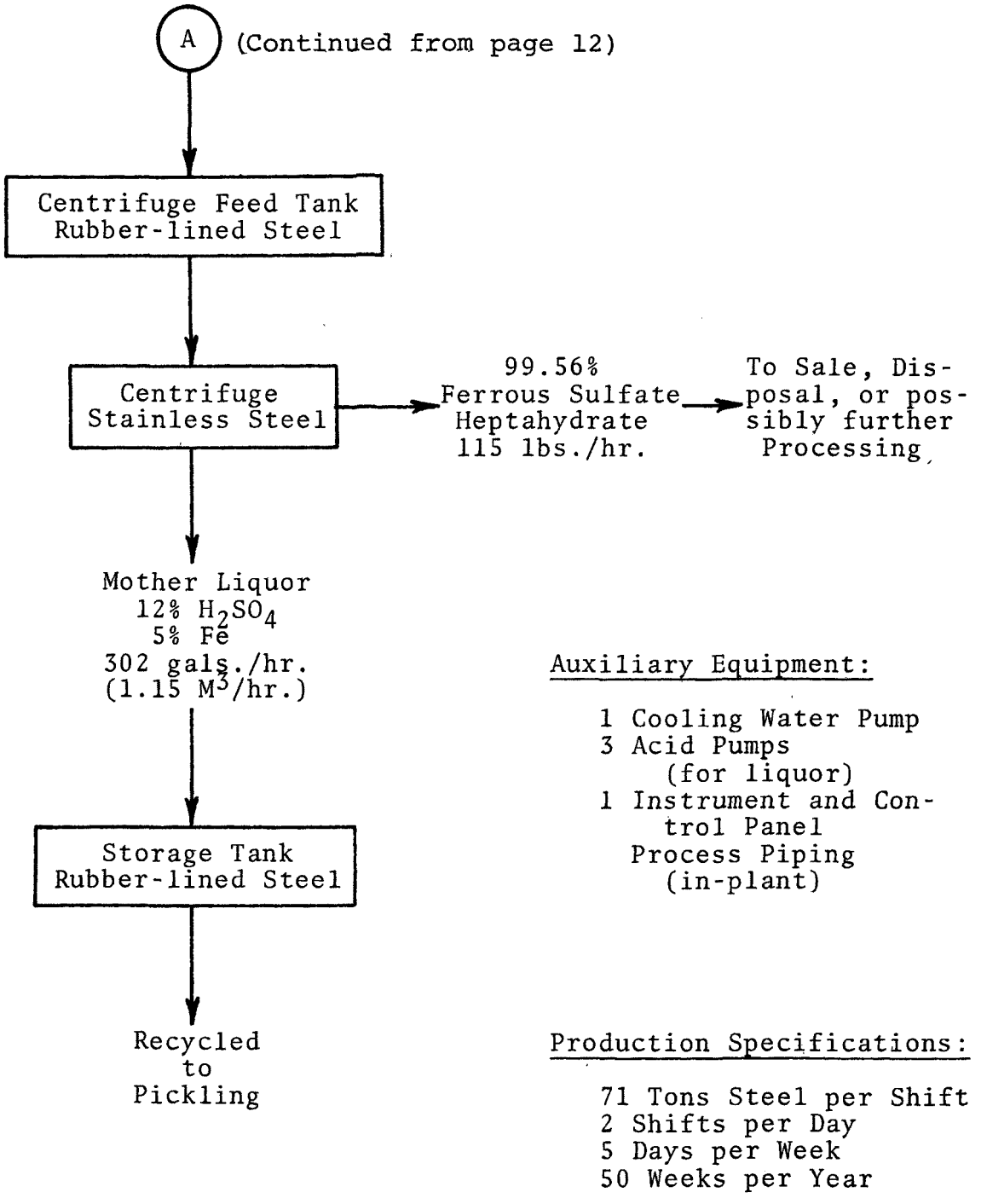

FIGURE 3B. Equipment Diagram of Acid Recycle Plant (cont'd)

FIGURE 4

Overall View of Acid Recycle and Iron Recovery Building

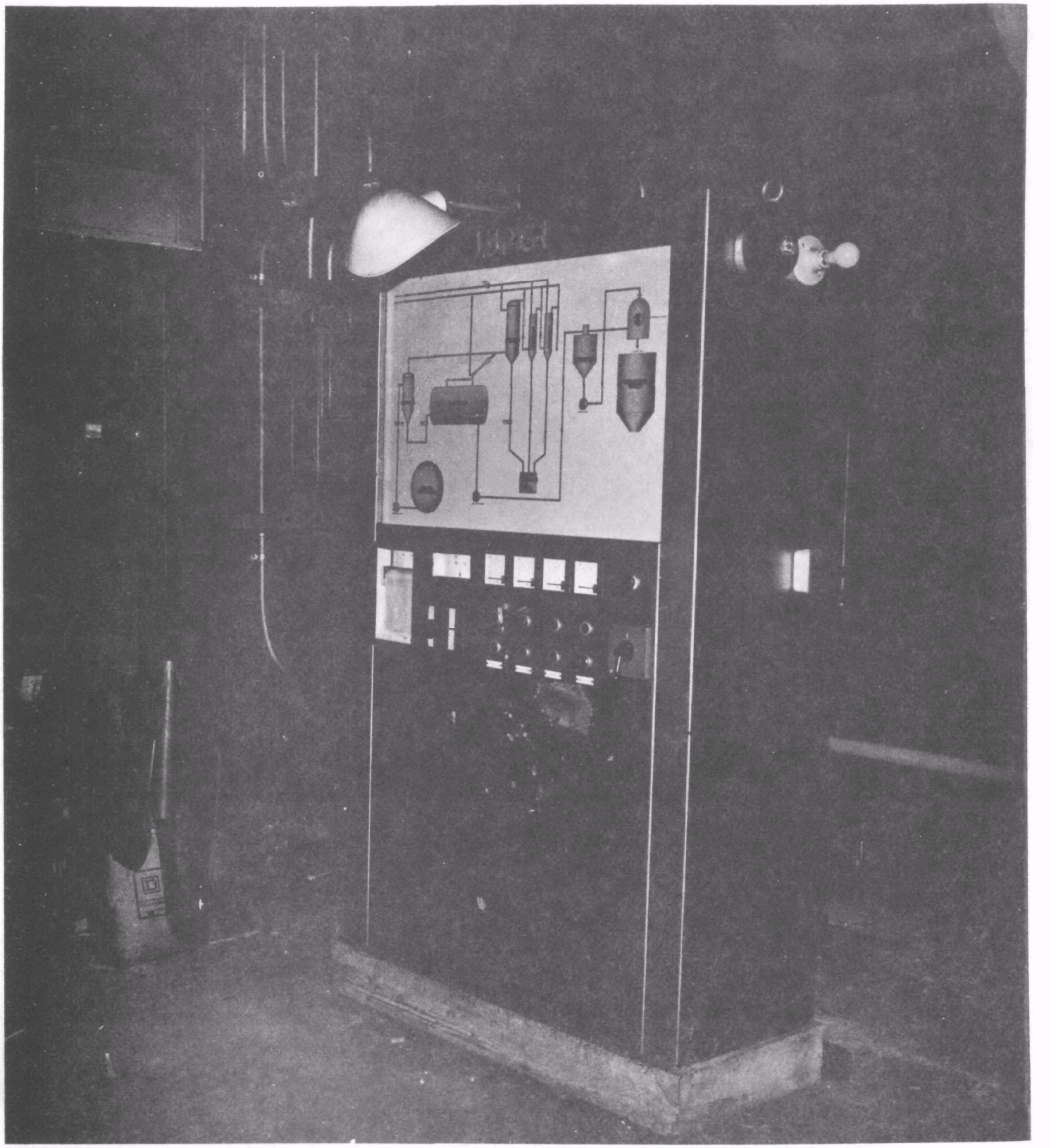

FIGURE 5

Instrument Panel of Acid Recycle and Iron Recovery System

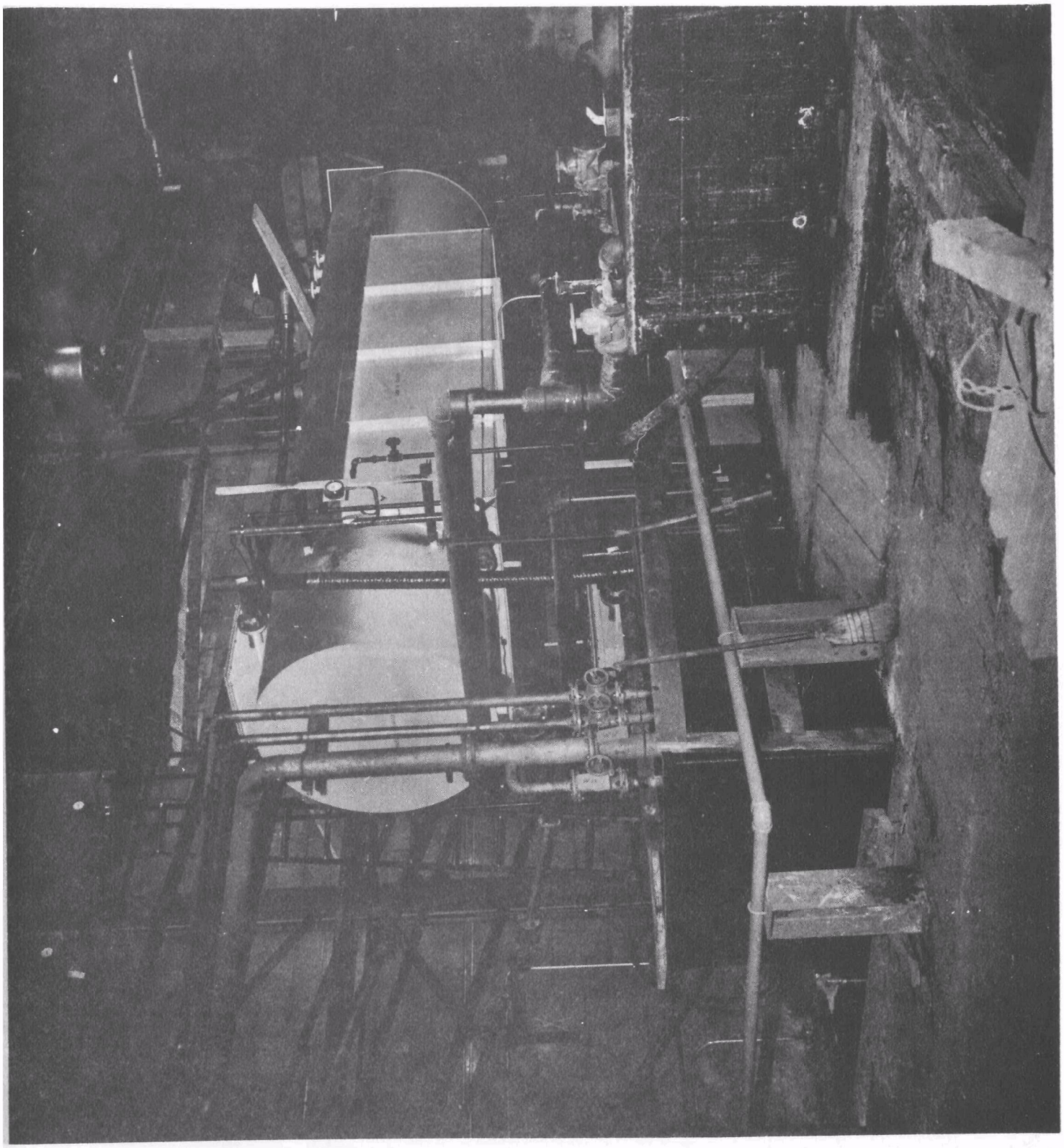

FIGURE 6

Recycled Acid Holding Tank

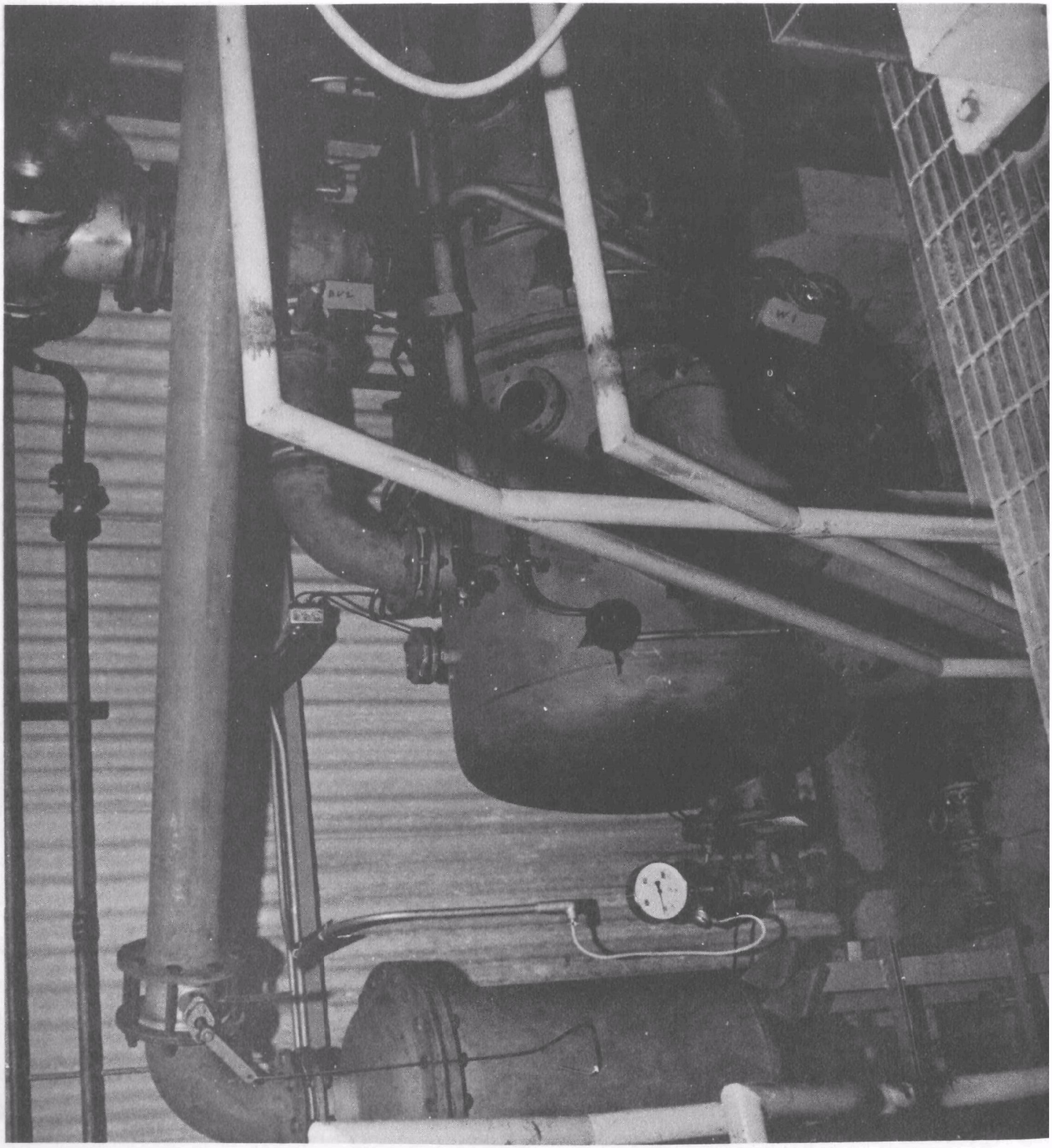

FIGURE 7

Pre-Cooler and Cooling Crystallization

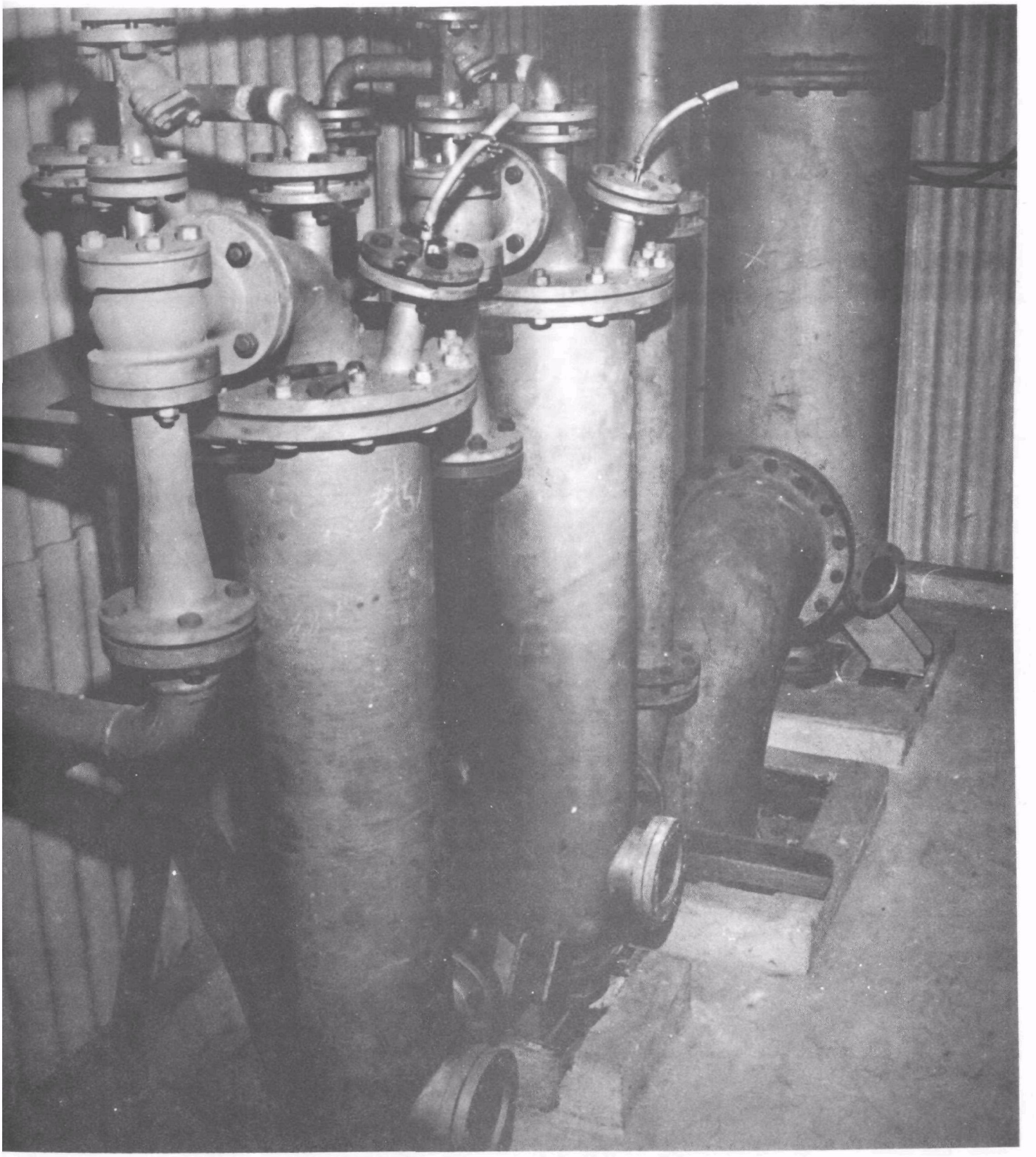

FIGURE 8

Steam Ejectors with Condensing Units

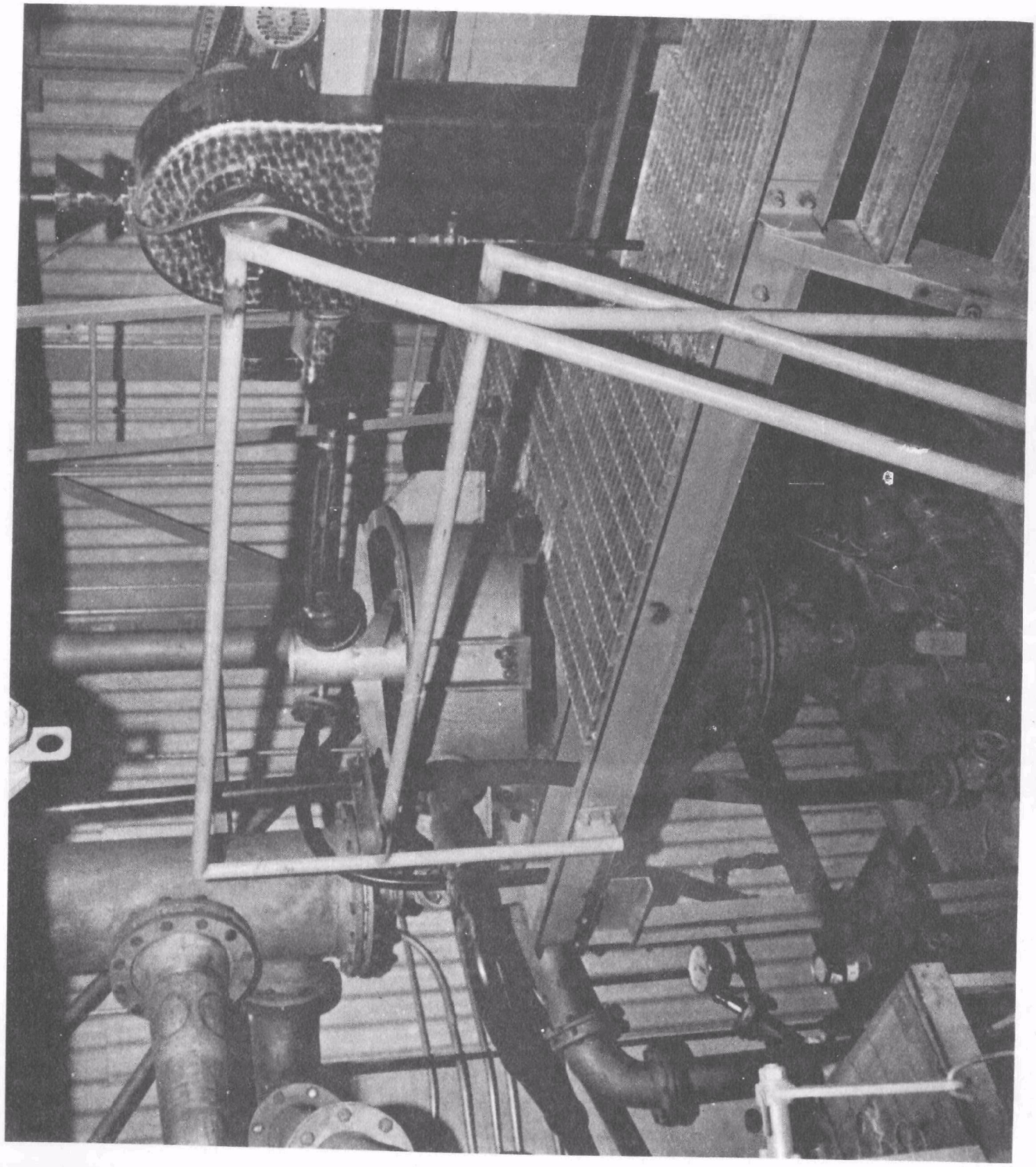

FIGURE 9

Centrifugal Thickener and Centrifuge

SECTION V

BASIC DESIGN CRITERIA

In designing systems for the recovery of ferrous sulfate and sulfuric acid from spent pickle liquors from continuous pickling lines and other pickling processes, it is essential to know the solubility of ferrous sulfate in such liquors at various temperatures and acid concentrations.

For example, (1) The solubility at low temperatures is necessary when the spent liquor is cooled to extract ferrous sulfate heptahydrate. (2) The solubility at high temperatures and high acid concentrations is necessary when the liquor is evaporated to high acid concentration to extract ferrous sulfate monohydrate. (3) The solubility at low acid concentrations and high temperatures is necessary to ensure that ferrous sulfate does not crystallize in the pickling tanks.

Tables 1 to 3 show the experimental work of Bullough, Canning, and Strawbridge for both the monohydrate and heptahydrate forms of ferrous sulfate. The transition points are shown in Table 4.

Linear interpolation of the data is shown in Tables 5 and 6. The results were then plotted in Figure 10.

The obvious conclusions are:

(1) The higher the acid concentration the lower the solubility of ferrous sulfate heptahydrate and therefore the greater the recovery.

(2) Since the Regeneration Plant operates around 6°C at acid concentrations less than 20%, only the heptahydrate will be formed.

TABLE 1

Ferrous Sulfate Monohydrate Dissolution
in Sulfuric Acid Solutions
(0^oC - 60^oC)

0^oC

H_2SO_4 % W/W*	$FeSO_4$ % W/W*
38.05	2.72
41.20	2.80
41.96	2.86
43.21	2.32
45.83	1.51
57.30	1.10
53.04	0.04

25^oC

H_2SO_4 % W/W*	$FeSO_4$ % W/W*
21.11	12.85
38.40	11.00
30.05	10.30
31.37	9.05
34.45	7.05
37.80	4.81
42.28	2.98
47.47	1.29

45^oC

H_2SO_4 % W/W*	$FeSO_4$ % W/W*
13.70	22.85
15.90	21.01
19.75	17.75
22.00	15.65
25.75	12.65

55^oC

H_2SO_4 % W/W*	$FeSO_4$ % W/W*
1.50	33.40
3.40	31.30
4.35	30.40
4.75	29.70
9.10	25.85
11.05	23.90
21.80	15.35
30.80	8.35
42.76	3.46

60^oC

H_2SO_4 % W/W*	$FeSO_4$ % W/W*
1.35	32.30
1.97	31.70
2.35	31.10
4.85	28.75
6.05	27.20
8.40	25.40
10.38	23.52
17.60	18.12
21.95	15.02
25.50	12.52
32.87	7.80
38.96	4.56
46.63	1.97
54.58	0.65
59.56	0.37

* % weight/total weight

TABLE 2

Ferrous Sulfate Monohydrate Dissolution
in Sulfuric Acid Solutions
(80°C - 100°C)

80°C		100°C	
H_2SO_4 % W/W*	$FeSO_4$ % W/W*	H_2SO_4 % W/W*	$FeSO_4$ % W/W*
1.60	26.60	2.97	18.70
2.00	26.18	5.79	17.98
2.45	25.60	8.24	17.62
3.75	24.60	11.04	17.28
4.50	23.90	13.28	16.78
6.88	22.10	16.08	15.98
8.08	21.40	19.10	14.80
13.88	18.50	21.17	14.00
20.30	15.00	28.38	9.95
26.40	11.48	35.94	6.60
30.66	8.75	42.19	3.83
37.75	5.35	44.97	2.99
44.83	2.73	50.85	1.62
51.57	1.13	56.31	0.92
56.00	0.65		

* % weight/total weight

TABLE 3

Ferrous Sulfate Heptahydrate Dissolution in Sulfuric Acid Solutions

$0^{o}C$

H_2SO_4 % W/W*	$FeSO_4$ % W/W*
0.70	13.41
6.74	10.90
12.17	8.76
16.92	6.98
23.46	4.88
29.41	3.24
33.40	3.02
38.58	2.67
41.53	2.75
43.62	2.92
47.90	2.08

$25^{o}C$

H_2SO_4 % W/W*	$FeSO_4$ % W/W*
0.60	22.51
2.92	21.05
6.42	18.90
16.23	14.52
24.70	11.48
28.00	10.71
32.38	9.80
34.80	8.70
36.65	6.91

$45^{o}C$

H_2SO_4 % W/W*	$FeSO_4$ % W/W*
0.80	30.55
3.70	28.50
7.40	26.41
10.31	25.42
12.65	24.60
15.70	22.81
18.12	21.60

* % weight/total weight

TABLE 4

Transition Points of Ferrous Sulfate
In Sulfuric Acid Solutions

Temperature °C	H_2SO_4 % W/W*	$FeSO_4$ % W/W*
0	42.2	2.7
25	30.0	10.4
45	13.0	24.3

* % weight/total weight

TABLE 5

Ferrous Sulfate Monohydrate Dissolution
in Sulfuric Acid Solutions (Interpolated)

H_2SO_4 % W/W*	Temp. °C				$FeSO_4$ % W/W*			
		0	25	45	55	60	80	100
2.5					32.39	30.96	25.56	
5					29.48	28.55	23.52	18.18
7.5					27.26	26.09	21.74	17.72
10					24.95	23.88	20.44	17.41
12.5					22.74	21.93	19.19	16.95
15				21.76	20.76	20.06	17.89	16.29
20				17.52	16.78	16.41	15.16	14.45
25			11.86	13.25	12.86	12.87	12.28	11.84
30			10.32		8.97	9.64	9.17	9.23
35			6.68		6.63	6.67	6.67	7.01
40		2.78	3.91		4.58	4.21	4.51	4.80
45		1.76	2.09			2.52	2.68	2.98
50		0.77				1.41	1.50	1.81

The above values were interpolated from Tables 1 and 2

* % weight/total weight

TABLE 6

Ferrous Sulfate Heptahydrate Dissolution
in Sulfuric Acid Solutions (Interpolated)

H_2SO_4 % W/W*	Temp. °C	$FeSO_4$ % W/W*		
		0	25	45
2.5		12.66	21.31	29.34
5		11.62	19.77	27.76
7.5		10.61	18.41	26.37
10		9.61	17.30	25.52
12.5		8.63	17.15	24.65
15		7.70	15.06	23.22
20		5.99	13.17	
25		4.46	11.41	
30		3.21	10.29	
35		2.91	8.51	
40		2.59		
45		2.64		

The above values were interpolated from Table 3

* % weight/total weight

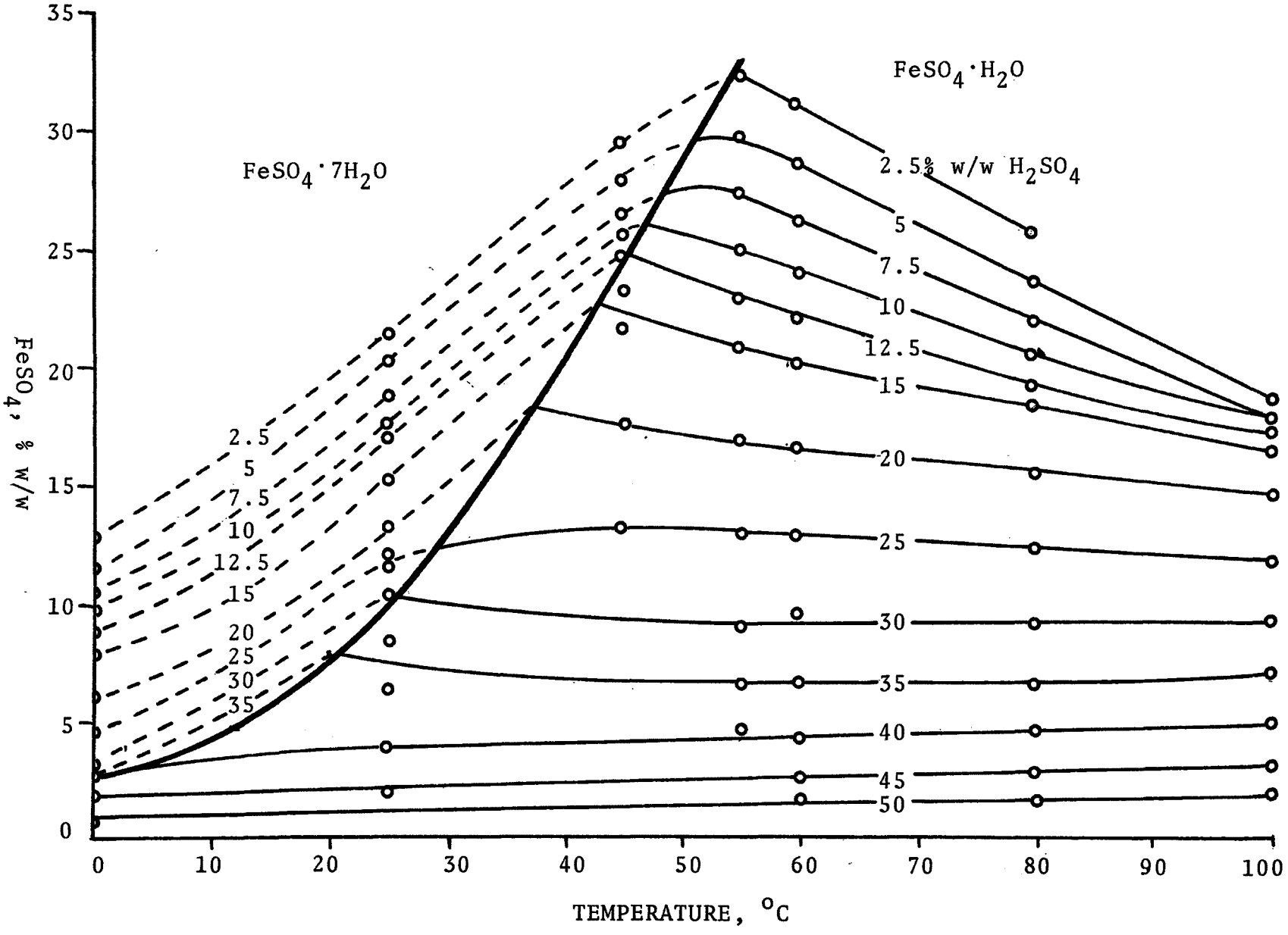

FIGURE 10 Ferrous Sulfate In Aqueous Sulfuric Acid

SECTION VI

RINSE WATER STUDIES

Rinse water studies began with a procedure for measuring the volume and rates of rinse water at the sources. There are three main sources: 1) Hose rinsing at the bar and coil mill; 2) drag-out from pickling; and 3) cooling water from the acid recycle plant. It is estimated that the dragout is about 70 gallons/hour (based on 15.8 tons steel/day); hose rinsing is about 228 gallong/hour; and cooling water is 3750 to 4950 gallons/hour. The rates for the hose rinsing and cooling water were obtained from field data. Table 7 summarizes the rinse water use.

Measurements of the total iron, ferrous iron, ferric iron and sulfate concentration were made and are summarized in Figures 11 to 14. These figures illustrate the peak, variation and average of free pollutants with and without the acid recycle plant in operation. The pollutional load prior to treatment is summarized in Table 8.

Having determined the volume and composition of the rinse waters we shall examine the various processes capable of eliminating the pollutions load. The present system is shown as a mass balance diagram in Figure 15.

In order to eliminate the pollutional load due to rinse water we shall examine the following alternatives.

(a) Multi-stage countercurrent rinsing in low volume tap rinse water with return to acid recycle plant.

In this case we must consider the following: 1) the spent pickle liquor rate cannot increase; for if it did we would have an excess of recycled liquor; 2) the steam heat to the pickle tank causes dilution and should be eliminated; 3) the drag-out of 70 gal/hour could be reduced by allowing more time for the pickle liquor to run off the bars and coils.

Thus, let us examine the following system: 1) eliminate steam heating with a heat exchanger; 2) reduce the drag-out; 3) reduce the amount of rinse water use by more efficient rinsing, i.e. use multi-stage countercurrent rinsing, efficient jets, etc.

The proposed mass diagram is shown in Figure 16. Note that only 4 gal/hour of rinse water may be used, and the pickling tank is heated by a heat exchanger.

(b) Multi-stage countercurrent rinsing with resulting rinse water being concentrated by pre-evaporation and then fed to the acid recycle plant.

The system is the same as above except that we could allow more rinse water to be used. However the pre-evaporator output to holding tank 1 can only be 4 gallons/hour. Commercial pre-evaporation units are available.

(c) Neutralization of the present dilute rinse waters followed by aeration and sludge recirculation to oxidize ferrous iron.

A facility to dispose of these rinse waters was designed by ARMCO Steel Corporation, Middletown, Ohio (1971). This process utilizes limestone for neutralization plus aeration and sludge recirculation to oxidize ferrous iron and form soluble calcium chloride. Hydrochloric acid was used as the pickler instead of sulfuric acid. Operating costs were 24.0¢/1,000 gal rinse water or 4.38¢/ton steel pickled. Capital costs for a facility to treat 1,500 gpm acid rinse water were $1,360,000.

TABLE 7

Summary of Rinse Water Use

Day	Rinse Volume Gallons		Rinse Period Hours		Rinse Rate Gallons/hour	
	Bar	Coil	Bar	Coil	Bar	Coil
Mon	676	372	5.73	2.17	118	171
Tue	659	484	6.35	3.82	104	126
Wed	821	500	7.13	6.33	115	79
Thur	640	650	6.27	5.37	102	121
Fri	731	883	6.93	6.67	106	132
Total	3527	2889	32.41	24.36	109	119

Avg. flow for Bar Mill	=	109 Gal/hr
Avg. flow for Coil Mill	=	119 Gal/hr
Drag-out for Bar and Coil Mill	=	70 Gal/hr
Total Rinse Water Flow with No Cooling Water from Acid Recycle Plant		298 Gal/hr

Acid Recycle Plant Cooling Water	3750-4950 Gal/hr
Total Rinse Water Flow Including Cooling Water from Acid Recycle Plant	4050-5250 Gal/hr

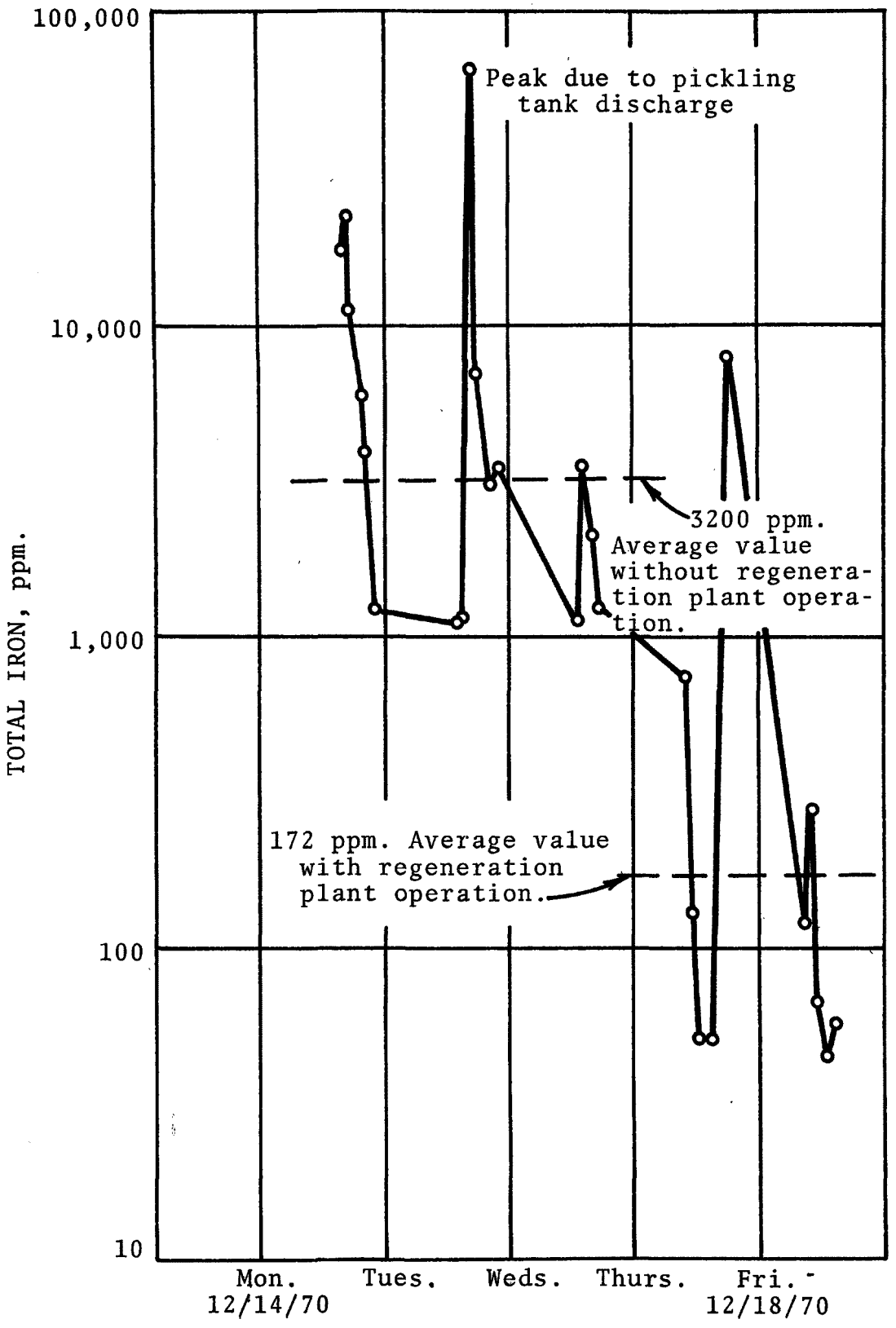

FIGURE 11 Total Iron Vs. Time For Bar Mill Rinse Water

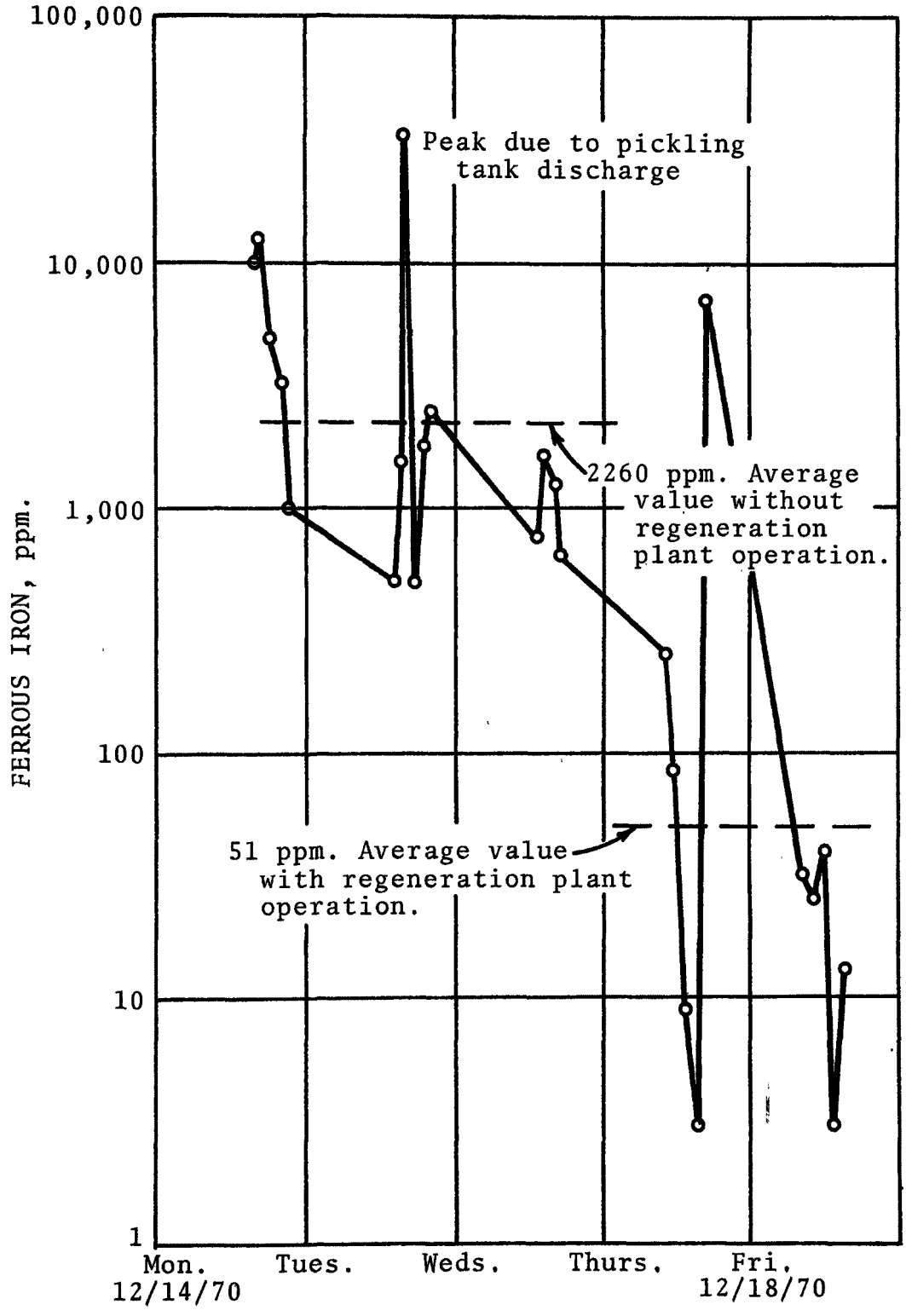

FIGURE 12 Ferrous Iron Vs. Time For Bar Mill Rinse Water

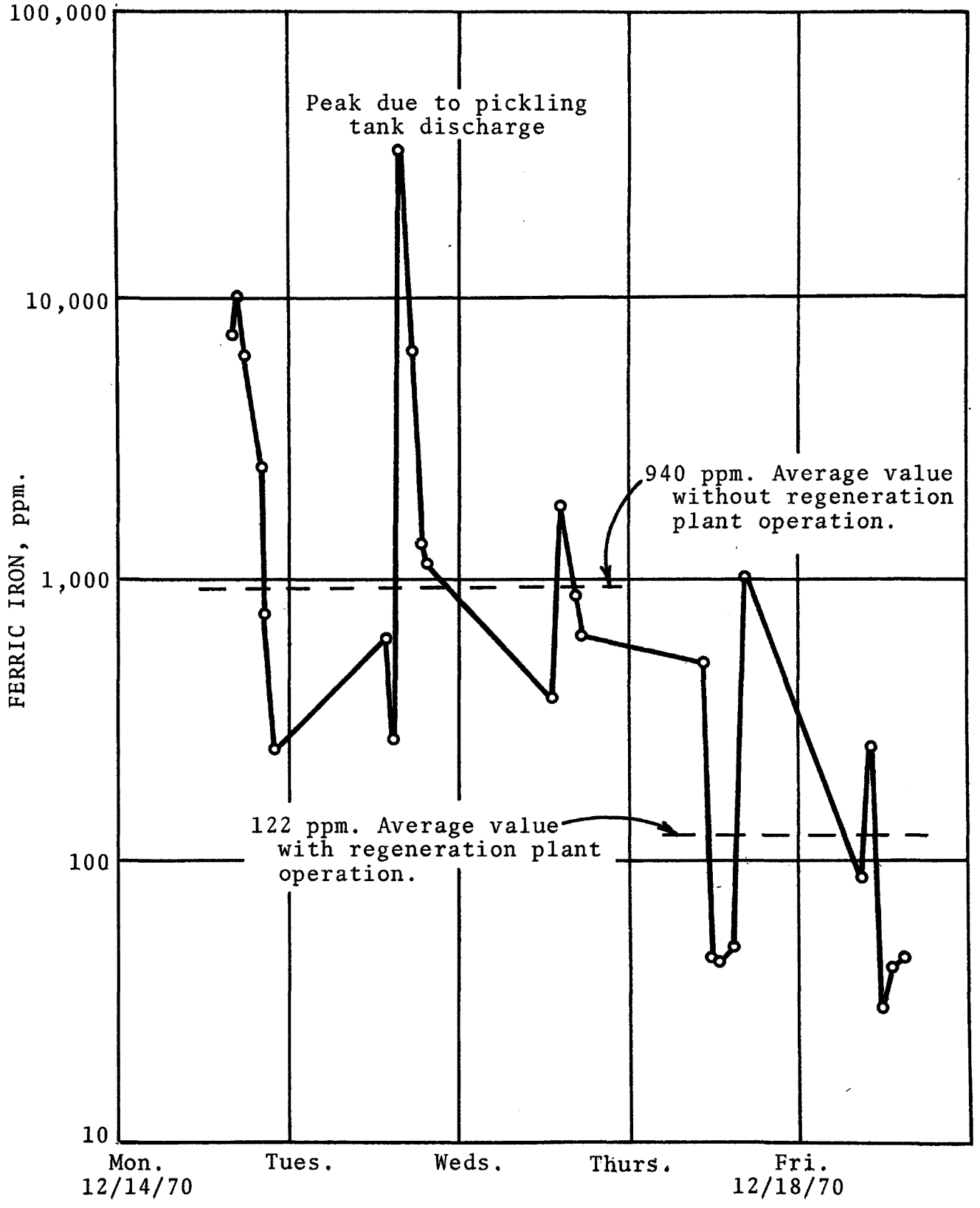

FIGURE 13 Ferric Iron Vs. Time For Bar Mill Rinse Water

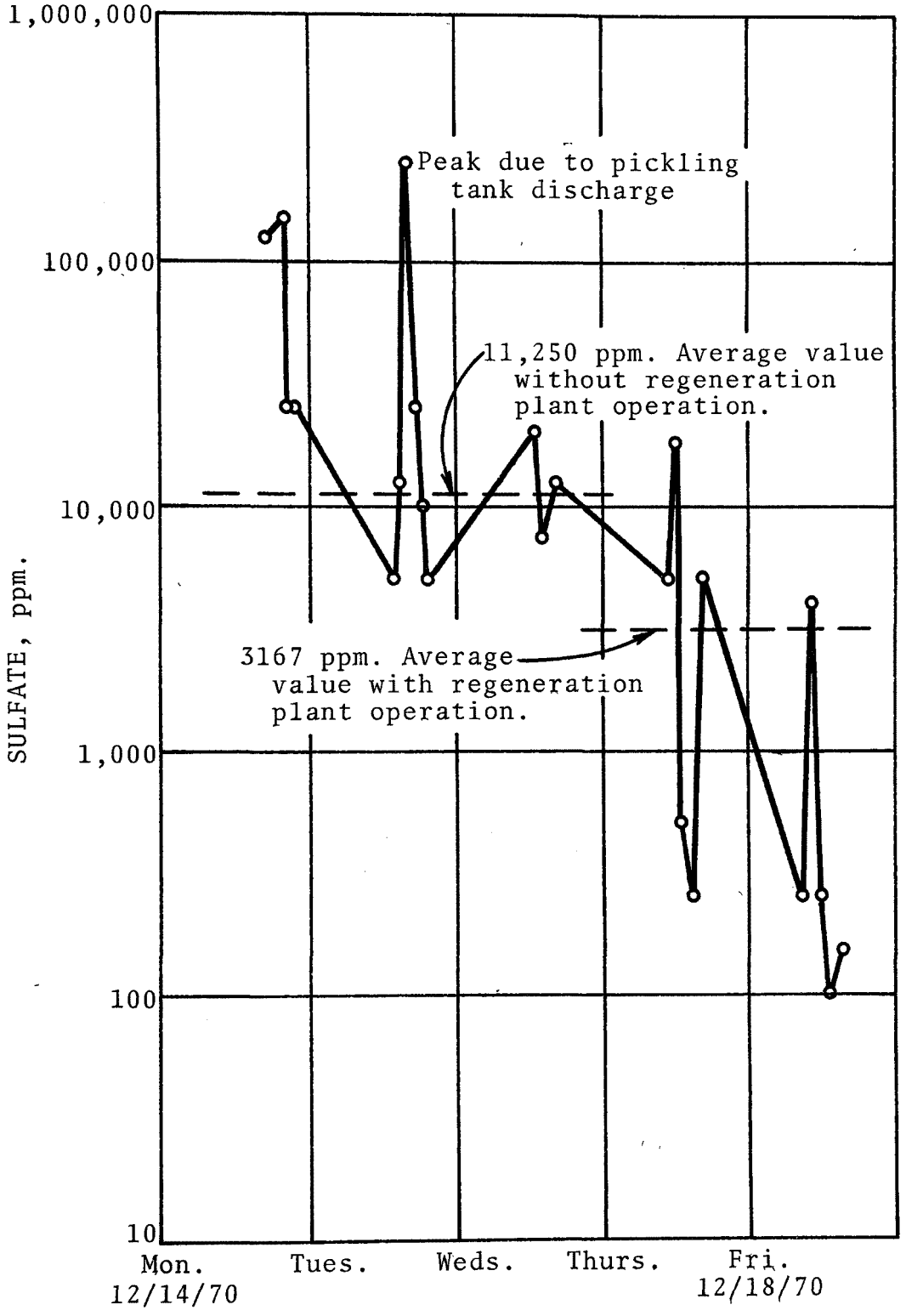

FIGURE 14. Sulfate Vs. Time For Bar Mill Rinse Water

TABLE 8

Rinse Water Pollution Prior to Treatment

Pollutant	Concentration* Mg/l	Concentration** Mg/l	Pollutant Rate Pounds/Hour
Total Iron	3200	172	7.95
Ferrous Iron	2260	51	5.61
Ferric Iron	940	122	2.34
Sulfate	11,250	3167	28.0

* Acid Recycle Plant not in operation. Thus no cooling water dilution

** Acid Recycle Plant in operation. Diluting cooling water

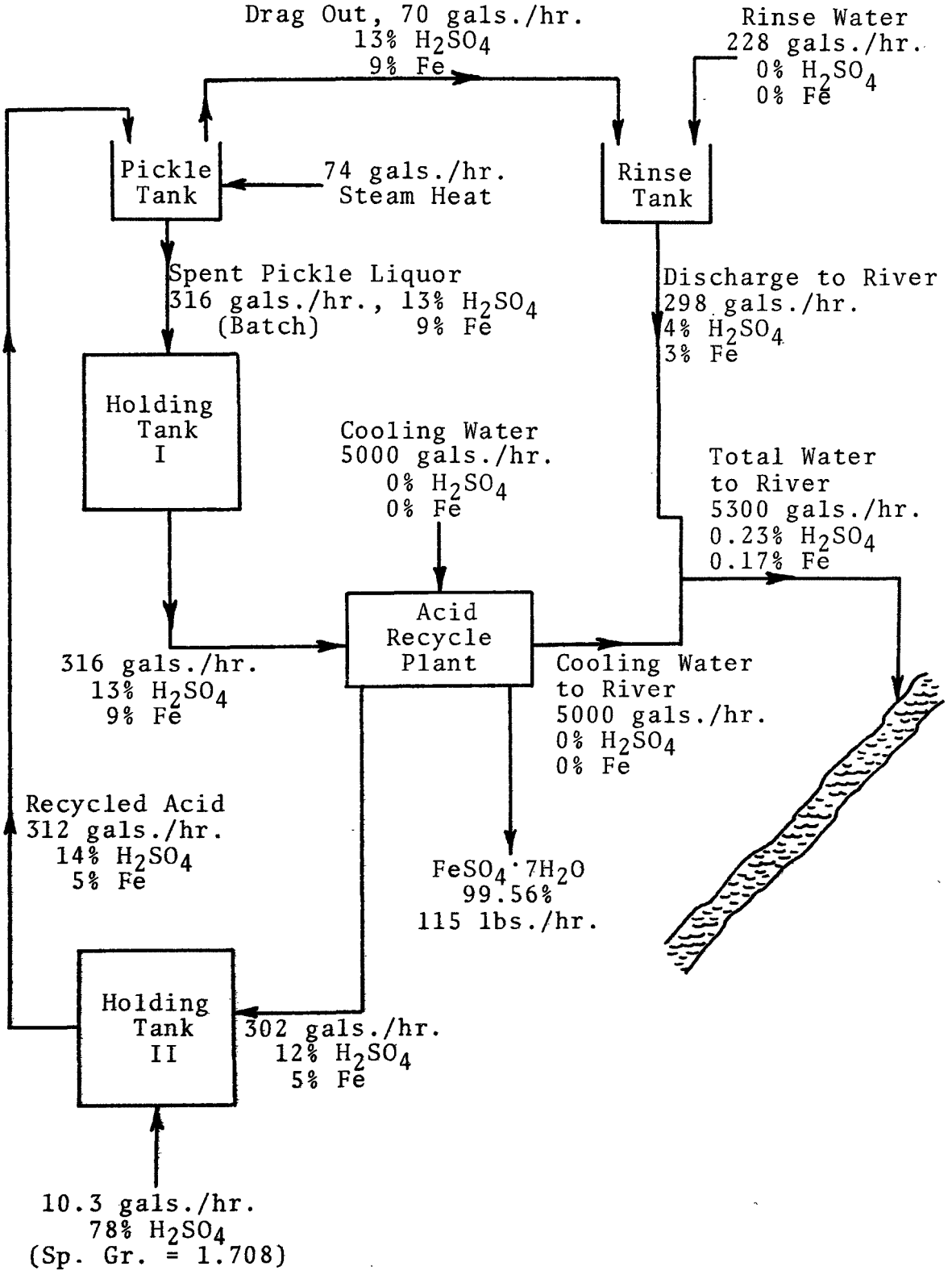

FIGURE 15. Acid Recycle System with Rinse Water to Waste

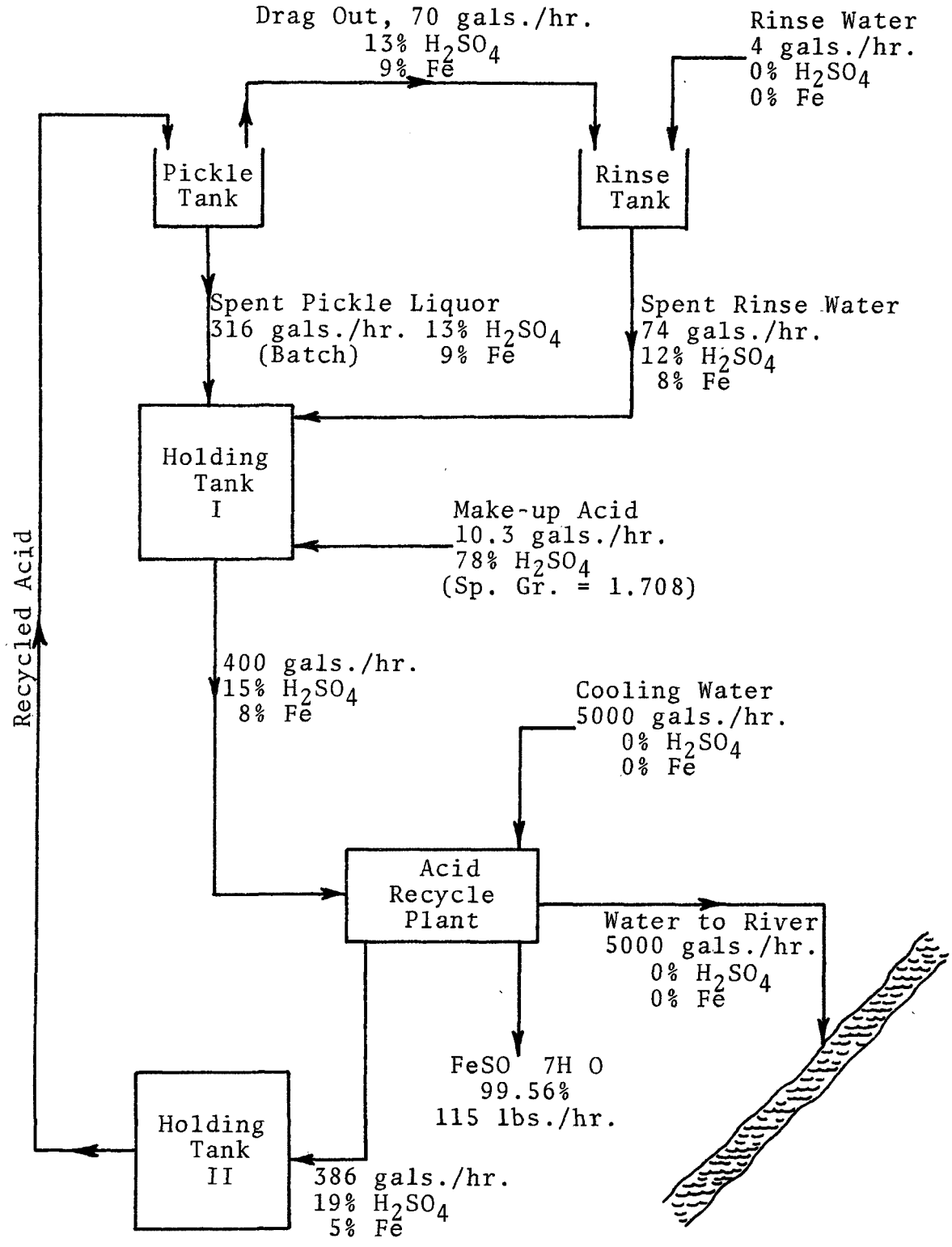

FIGURE 16 Acid Recycle System Treating Rinse Water

SECTION VII

MARKET SURVEY OF FERROUS SULFATE

Because up to 70 tons/month of ferrous sulfate is produced (presently 18.5 tons/month) and since this by produce is not used by Fitzsimons Steel in their process a market survey was conducted to determine possible uses and outlets of the by-product. The following pages summarize the market survey. Additional information can be found in the appendix.

SUMMARY OF MARKET SURVEY

Following is a brief recapitulation of the major findings of the study:

1. Approximately 200,000 tons of ferrous sulfate are produced nationally each year. Of this total, only 55%-65% is actually sold into the open market.

2. The dollar value of the market for commercially-produced ferrous sulfate amounts to approximately $1 million annually. Growth over recent years has been moderate.

3. Current production capacity "in-place" for commercial grades of ferrous sulfate amounts to 355,000 tons annually--considerably above the tonnage actually produced and sold.

4. The market is actually in a glutted state--and prices have wavered over the years in reflection of the excess production over market-absorbing ability.

5. Major commercial producers include but are not limited to: National Lead Co.; Pfizer, Inc.; Cosmin Co.; American Cyanamid Co.; and Steel Chemical Co.

6. Major end-use markets for the commercially-produced material are: iron oxide pigments -- 55%; ferrites -- 30%; water and/or sewage treatment -- 5%; and other applications -- 10%. (The percentages represent tonnage -- not dollars.)

7. In addition to the ferrous sulfate produced commercially, an additional 2.7 million tons is generated annually as by-product from the manufacture of steel and titanium dioxide. This material is generally is slurry form -- impure and dirty. Most of it is being "disposed of" by the companies involved -- either through direct dumping or deep well pressure injection. Pollution officials are putting a stop to dumping procedures -- with the result that steel companies and producers of titanium dioxide are desperately seeking methods of legitimate disposal.

8. The Fitzsimons ferrous sulfate generated as a by-product from the Keram Chemie-Lurgi process is considered to be far superior in quality and physical characteristics to the spent pickle liquor-types of ferrous sulfate currently being generated by some mills.

9. Usage of ferrous sulfate in the local market (75 mile radius around Youngstown) is currently negligible. There is no potential in iron oxide pigments since the major paint companies generate most of their own needs when they manufacture titanium dioxide for use as a "filler" in their paints; the only substantial fertilizer producer in the area no longer uses the material in their blends. Therefore, the only realistic "potential" markets are the water and sewage treatment plants in the various cities in the trading area.

10. During the course of the survey, nine companies and/or cities were furnished with physical samples of the Fitzsimons material along with a chemical analysis. A full listing of these nine--and the current status of their testing appears in the appendix.

11. The best current prospect for a portion of the material is the Mahoning Valley Sanitary District for the treatment of water.

12. Chemists and technical people "call the shots" on whether or not the material can be used. This hurdle must be crossed before purchasing negotiations even begin.

13. Normal prices for ferrous sulfate heptahydrate are $20-$40 per ton for high-grade, bagged material--shipped FOB carload. Estimates of a "logical" price for the Fitzsimons product are in the $10 per ton range, delivered.

The net of the situation is this: if this was a market that Fitzsimons was considering getting into from a purely commercial standpoint, the answer would be obvious--don't do it. It is over-produced already. However, Fitzsimons is not in the business "voluntarily". Fortunately, their by-product material is considered significantly better than the by-product of other sulfuric acid recovery systems by those that have seen and tested it. As a result, even though there is no open "demand" for the product within their trading area, it is considered quite likely that the material can be successfully disposed of--either at a profit, or certainly at no loss to Fitzsimons. This is because the material is of a unique grade and purity. The only way that ultimate users will be located, however, is through a testing program. The nine tests currently under way could very well result in some "live" prospects for the material. If not, then an all-out sample and testing program should be instituted with all chemical distributors, and water and sewage plants within the trading area that have not already been contacted.

SECTION VIII

EXPLORATORY PROGRAM TO EVALUATE THE CONVERSION OF FERROUS SULFATE TO OTHER PRODUCTS

One of the objectives of this study was to determine possible conversion of ferrous sulfate heptahydrate. As outlined in Section VII - Market Survey, there are markets for ferrous sulfate as produced, namely, the Mahoning Valley Sanitary District which treats water for a potable water supply of 30 MGD and the City of Youngstown Waste Water Treatment Plant. A chemical analysis of the recovered salt was performed in order to evaluate the quality of the product. This analysis was made for two reasons: (1) establishing the unit price of the product; and (2) using this information as input data for conversion processes

A. Chemical Analysis of the Recovered Ferrous Sulfate Heptahydrate

Sampling:

Equal amounts of thirteen samples were mixed together using standard sectioning techniques. The appearance of the samples was fairly uniform and quite clean looking. There were occasional lumps which appeared gray instead of the light green-blue color associated with the general sample. The time of exposure to the air was kept as short as possible.

Ferrous Ion Analysis:

The ferrous content of the sample was determined on three separate samples by dissolving a weighed amount of sample in deionized water and directly titrating with a standardized potassium permanganate solution. The results were 19.73 ± 0.07%.

Ferric Ion Analysis:

The ferric ion content was determined by difference. A total iron analysis was performed by dissolving three weighed samples in deionized water, reduction of any iron in the ferric state with stannous chloride, destruction of excess stannous chloride with mercuric chloride and titration with the standard potassium permangana solution. The results indicated 0.04% ferric ion. This low percentage was qualitatively checked by addition of a potassium thiocynate solution to a 5% solution of the sample. A very slight red color resulted. Addition of a small amount of ferric solution resulted in a blood red color. The conclusion is that there is very little ferric ion in the sample.

Sulfate Ion Analysis:

The sulfate ion was analyzed for by precipitation with barium chloride, quantitative filtration and ignition to a dry barium sulfate residue.

This is a standard way to analyze for sulfate and the results of three analysis gave a sulfate content of 34.00 ± 0.03%.

Total Water Content:

The water content was determined by vacuum drying the sample at 325°C for two hours. The results of three separate analysis gave a content of 45.74 ± 0.02%. This result may be somewhat low as the last trace of water is very difficult to remove from material such as this.

Chloride Ion Analysis:

The upper limit of the chloride ion content was determined by a standard addition technique. A 5% solution of the sample was treated with a 1% solution of Silver Nitrate. There was no precipitation of AgCl or any indication of a precipitate, opalesence. Addition of a trace of chloride amounting to 0.005% of the sample weight gave a noticeable cloudiness of AgCl precipitate. It was, therefore, concluded that the chloride content of the sample was less than 0.005%.

Insoluble Residue:

The insoluble residue was determined by filtering a solution of a weighed amount of the sample through a porous glass crucible and weighing the residue. This was done for three separate samples with a result that the insoluble residue is 0.01%.

pH of a 5% Solution:

The pH of a 5% solution was determined and was found to be 3.6 comparable to a solution of commercial ferrous sulfate.

Phosphate Ion Analysis:

A very sensitive test for phosphate is the development of a blue color with ammonium molybdate solution. Tests indicate no color formation with this test solution and the conclusion is that there is no phosphate in the sample.

Manganese Analysis:

The manganese content was determined by standard addition techniques using the oxidation of manganous ion to permanganate ion which is highly colored as the basis for the test. The result was a manganese content of 0.05%.

Copper Ion Analysis:

The copper ion was determined by the extraction of copper dithizone complex into carbon tetrachloride. This test showed a very low almost

undetectable amount of copper in the sample. The content was less than 0.005%.

Zinc Ion Analysis:

The zinc ion was determined in the same manner as the copper ion and the results showed a zinc ion content of less than 0.02%.

The sample which was analyzed is quite pure ferrous sulfate. The theoretical percentage for ferrous ion is 20.08% compared to the 19.73% found. The theoretical value for sulfate ion is 34.53% compared to the value found of 34.00%. However, the ratio of ferrous to sulfate weights is .5817 to 1.000 theoretically and .5815 to 1.000 actually. The conclusion is that the material is $FeSO_4$ with slightly more than seven (7) waters of hydration. In other words, the sample is slightly wet $FeSO_4.7H_2O$.

The trace analysis compared quite favorably with commercially available "Certified Reagent Grade" ferrous sulfate. There is no indication of contamination by calcium ion or sodium ion as evidenced by the negative results of a flame test.

B. Conversion To Other Products

1 Fused Magnetite and Sulfuric Acid

Treadwell Corporation (1972) has developed a system for converting ferrous sulfate into fused magnetite and a gas which can be converted into 20 percent acid by wet oxidation. They have developed a very compact furnace unit which can be skid mounted and operated at a very high capacity. The operating temperature is 2800°F. With a very intense flame of fuel, oxygen, and ferrous sulfate, the iron oxide is melted and collected to be trapped from a hearth into a ladle or floor mold.

2 Ferrous Sulfate Roasting - Contact Sulfuric Acid Plant

A. E. Demhiltz of Singmaster and Breyer in an article entitled "Profitable Pickle Liquor Regeneration" (1960) discusses a process expected to operate under $15.00/ton of sulfuric acid which converts ferrous sulfate to 90 percent sulfuric acid. The washed ferrous sulfate is continuously fed to a rubber conveyor belt and carrie to the top of a multiple hearth furnace. Coal fines and sulfur are added to the wet cake to insure proper roasting conditions and that sufficient sulfur bearing gas are available to the acid plant. A small package contact sulfuric acid plant equipped with standard scrubber, mist precipitation, heat exchangers and converter receives the hot gases from the cyclone dust collector. The gases are water quenched, precipitated, and dried in a packed tower with sulfuric acid before passing to three heat exchangers. Sulfur dioxide with excess oxygen is converted in the converter to SO_3 and eventually absorbed by H_2SO_4 to make 90 percent acid.

TABLE 9

Analysis of a Salt Sample

Identified as "Ferrous Sulfate Heptahydrate"

Ferrous Iron (Fe^{++})		19.73%
Ferric Iron (Fe^{+++})		0.04%
Sulfate Ion (SO_4^{--})		34.00%
Water (H_2O)		45.74%
Chloride Ion (Cl^-)	Less than	0.005%
Insoluble Residue		0.01%
Phosphate Ion (PO_4^{---})		0.000%
Manganese Ion (Mn^{++})		0.05%
Copper Ion (Cu^{++})	Less than	0.005%
Zinc Ion (Zn^{++})	Less than	0.02%
Total Material Accounted for		99.56%
pH of a 5% solution		3.6

TABLE 10

Comparison of Recovered Salt With
Theoretical Ferrous Sulfate Heptahydrate

$FeSO_4.7H_2O$

	Molecular Weight	% Theory	% Analysis
Ferrous ion (Fe^{++})	55.84	20.08	19.73
Sulfate ion (SO_4^{--})	96.06	34.56	34.00
Water (H_2O)	126.112	45.36	45.74
Other		0.00	0.09
	278.012	100.00	99.56

SECTION IX

ECONOMIC ESTIMATES

A. Capital Costs

During the entire project accurate records were kept of all expenses incurred for the Regeneration Plant, and are summarized in Table 11. In summary the costs are as follows:

Development	$ 15,953.00
Construction	175,757.72
Total Capital Costs	191,710.72

The total capital costs were amoritized over a 15 year period using an interest at 6%. Based on these facts, the yearly capital cost was $19,738.54.

B. Normal Operation

During the period January 1, 1971-June 15, 1971 the acid recycle was operated under normal conditions. From the data of Tables 11 and 18 and unit costs obtained for utilities, operating benefits and costs were calculated as shown in Table 12. The results are summarized as follows:

Normal Operation (Salt asset)		
Operating Costs	15.59$/hr	
Operating Benefits	5.93$/hr	
Net Cost	9.66$/hr	38,640$/hr
Capital Cost		19,739$/yr
Total Cost		58,399$/yr

The above assumes that the ferrous sulfate is an economic gain. However, due to the overproduction of the product, it should be considered as a liability. The results are summarized below and shown in Table 13.

Normal Operation (Salt liability)		
Operating Costs	15.93$/hr	
Operating Benefits	5.35$/hr	
Net Cost	10.58$/hr	42.320$/yr
Capital Cost		19.739$/yr
Total Cost		62,059$/yr

C. Special Operation

During the period August 2, 1971-October 26, 1971, the Regeneration Plant was operated under special conditions. These conditions were an 0.8 cutib meters/hour feed rate as opposed to a normal rate of 1.2.

TABLE 11

Capital Expenses For The
Acid Recycle And
Iron Recovery Process

					$
I	Development Costs				
	A) Salaries and Wages				625.00
	B) Consulting				13,000.00
	C) Travel				1,328.00
	D) Publications and Reports				1,000.00
	Total Development				15,953.00
II	Construction				
	A) Plans	1)	Recycle Plant		6,000.00
		2)	Piping and Pumps		3,000.00
		3)	Foundation		2,350.00
					11,350.00
	B) Sub-contracts	1)	Building		5,109.00
		2)	Underground Piping		4,005.00
		3)	Ohio Water Service		1,748.00
					10,862.69
	C) Supervision	1)	Air Compression		88.25
		2)	Recycle Plant		11,000.00
		3)	Building		2,037.62
					13,125.87
	D) Labor	1)	Building		11,578.53
		2)	Piping, Pumps, and Cooling		23,589.17
		3)	Erection		8,627.24
		4)	Electrical		13,268.90
					57,063.84
	E) Materials	1)	Cooling		760.00
		2)	Recycle Plant		55,000.00
		3)	Piping and Pumps		17,467.46
		4)	Building		4,293.04
		5)	Erection		1,988.23
		6)	Foundation		1,795.00
		7)	Electrical		2,051.59
					83,355.32
	Total Construction				175,757.72
	Total Capital Expenses				191,710.72
	Yearly Capital Cost*				19,738.54

* Based on capital recovery factor of 15 years at 6% (0.10296)

TABLE 12 Operating Benefits and Costs For Normal Operation (Salt Asset)

January 1, 1971 - June 15, 1971

Operating Costs

	Units	c/Unit	$	$/Hr
Production Time, Hours	1,027.75			
Main Cooling Water, Ft^3	72,792.	0.0948	69.01	0.0672
Aux Cooling Water, Ft^3	24,920.	0.6956	173.34	0.1687
220 Power, KWH	4,132.	1.86	76.85	0.0748
440 Power, KWH	294.	1.86	5.47	0.0053
Steam, Lbs	67.689	0.10	67.69	0.0659
Maintenance, Equipment			340.00	0.3308
Labor, Hours	326	1132.	3,690.32	3.59
Operator, Hrs	1,094	1061.	11,607.34	11.29*
Total			16,030.02	15.59

Operating Benefits

	Units	c/Unit	$	$/Hr
Production Time, Hours	1,027.75			
Acid Recovery, Lbs @ 12%	2,717.384	0.2027	5,508.14	5.36
Salt, Lbs	118,143	0.500	590.72	0.575
Total			6,098.86	5.93

Net Cost 9.66 $/Hr, 38,640 $/Yr*

Total Cost = Capital + oc = 58,379 $/Yr

*Includes company overhead, fringe benefits, s.s., etc.

**8 Hr/shift, 2 shifts/day, 5 days/week, 50 weeks/year

TABLE 13 Operating Benefits and Costs For Normal Operation (Salt Liability)

Operation Costs without salt disposal		15.39 $/hr
Salt disposal 118,148 lbs x 0.300¢/lb = $354.43		
$354.43/1027.75 hr	=	0.34 $/hr
Total o.c.		15.93 $/hr
Operating Benefits with salt recovery		5.93 $/hr
Less salt benefits		.58 $/hr
Total o.b.		5.35 $/hr

Net cost = 10.58 $/hr, 42,320 $/yr

Total Cost = Capital + oc = 62,059 $/yr

The change was initiated in order to produce a drier salt. When the Mahoning Valley Sanitary District ran a pilot test using 10 tons of the salt, they found that the coagulation results were excellent; however, the salt tended to bulk in their hoppers. They hypothesized that this was due to surface moisture on the salt. Therefore, we felt that a reduction in feed rate would lessen the salt production and possibly produce a drier salt. An initial study of acid recycle and iron recovery storage hopper indicates that in fact a drier salt was produced.

From the data of Table 11, and unit costs obtained for utilities, benefits and costs were calculated and are shown in Table 14. The results are summarized below.

Special Operation

Operating Cost	47.37 $/hr	
Operating Benefits	3.95 $/hr	
Net Cost	43.43 $/hr	173,660 $/yr
Capital Cost		19,739 $/yr
Total Cost		193,439 $/yr

D. Cost Summary

Analyzing the results of the Normal Operation and the Special Operation and present consideration of the ferrous sulfate heptahydrate as a liability we may conclude that the normal conditions are typical of the plant operation. This results in a yearly total cost of 62,059 $/yr. Production, sales, and waste volumes were obtained from company data and Table 15 summarizes the results.

E. Resources Utilization

In order to determine the overall acid recycle plant efficiency a resources utilization table was made, Table 16. This table is based on a 5 day working week, 2 shifts/day. During this period of study, the plant was up 94% of the time. Note that the utilization of auxiliary cooling water and 220 power are 28% and 50% respectively. This is because there are units such as electric blowers for heaters and water seals for pumps operating continuously. The plant is now only operating 48% of the time and could be operated 3 shifts/day and 7 days a week if necessary.

A similar resource utilization table was made for the Special Operation, Table 17. The table is based on a 5 day working week, two shifts/day. During the period of study the plant was up 25% of the time. This low value was due to the fact that considerable down time occurred awaiting shipment of replacement parts. Also note that auxiliary cooiling water utilization did not change from the Normal Operation condition because it runs continuously.

TABLE 14 Operating Benefits and Costs For Special Operation

August 2, 1971-October 26, 1971

Operating Costs

	Units	¢/Unit	$	$/Hr
Production Time, Hours	244.50	0.0948	18.86	0.0771
Main Cooling Water, Ft^3	19.899	0.6956	105.52	0.4316
AUX Cooling Water, Ft^3	15,170	1.86	30.99	0.1267
220 Power, KWH	1,666	1.86	1.28	0.0052
440 Power, KWH	69	0.10	17.36	0.0710
Steam, Lbs	17,362		137.	0.5603
Maintenance, Equipment			747.12	3.056
Labor, Hours	66	1132.	10,525.12	43.04
Operator, Hr	992.	1061.	11,583.25	47.37*

Operating Benefits

Production Time, Hours	244.5	0.2027		
Acid, Recovery, Lbs @ 12%	430,974	0.500	837.55	3.5728
Salt, Lbs	18,737		93.69	0.3832
Total			967.24	3.9560

Net Cost 43.42 $/Hr, 173,680 $/Yr**

Total Cost = Capital + oc = 193,439 $/Yr

**8 Hr/shift, 2 shifts/day, 5 day/week, 50 weeks/yr

*Includes company overhead, fringe benefits, s.s., etc.

TABLE 15 Cost Summary

Total Yearly Cost	62,059 $/year
1971 Production	35,540 tons/year
Cost/Ton Produced	1.75 $/ton production
1971 Sales	10,150,00 $
Cost/$ Sales	0.614 ¢ cost/$ sales
1971 Waste Volume	4,800 M^3/year
Cost/M^3 Waste	12.93 $/$M^3$

TABLE 16 Resources Utilization For Normal Operation

January 1, 1971-June 15, 1971

Utilization	Up-Time**		Down-Time***		
	Units/Hr	Units	Units	Total	% Up
Time, Hours	1.0	1027.75	66.25	1094.00*	93.94
Main Cooling Water, Ft^3	70.44	72,395	397.	72,792	99.45
AUX Cooling Water, Ft^3	6.848	7,038	17,882.	24,920	28.24
220 Power, KWH	1.9911	2,046	2,086	4,132	49.51
440 Power, KWH	0.2712	279.	15	294	94.89
Steam, Lbs	65.8614	67,689	0	67,689	100.00
Waste, M^3	1.2	1,233.3	79.5	1,312.8	93.94

*Based on 8 Hr/shift, 2 shifts/day, 119 days
**Actual time when acid recycle plant is operating
***Idle, repair, or maintenance time

TABLE 17 Resources Utilization For Special Operation August 2, 1971-October 26, 1971

	Up-Time**		Down-Time***		
	Units/Hr	Units	Units	Total	% Up
Time, Hours	1.000	244.5	747.5	992.00*	24.64
Main Cooling Water, Ft^3	75.944	18,569	1,330	19,899	93.31
AUX Cooling Water, Ft^3	12.856	3,143	12,027	15,170	20.71
220 Power, KWH	1.879	459	1,207	1,666	27.55
440 Power, KWH	0.285	69	0	69	100.00
Steam, Lbs	71.008	17,361	0	17,362	100.00
Waste M^3	0.8	195.6	598	793.6	24.64

*Based on 8 hr/shift, 2 shifts/day, 62 days
** Actual time when acid recycle plant is operating
*** Idle, repair, or maintenance time

SECTION X

REFERENCES

Chemical Economic Handbook, Stanford Research Institute, Menlo Park, California, Report 736.5030 A-8, January, 1970.

"Limestone Treatment of Rinse Waters from Hydrochloric Acid Pickling of Steel," Enviromental Protection Agency, Water Quality Office, Project 12010 DUL, February, 1971.

Oil, Paint, and Drug Reporter, Chemical Profile Section, U. S. Department of Commerce, Issue #14, March 31, 1969.

Oil, Paint, and Drug Reporter, 1967 Census of Manufacturers, SIC-28199, U. S. Department of Commerce.

"Profitable Pickle Liquor Regeneration" by A.E. Dembitz, Industrial Wastes, June, 1960, pp. 50-52.

"The Cost of Clean Water," Volume III, Industrial Waste Profile No. 1 Blast Furnaces and Steel Mills. U. S. Department of the Interior, Federal Water Pollution Control Administration, September 25, 1967.

"The Solubility of Ferrous Sulfate in Aqueous Solutions of Sulfuric Acid," by W. Bullough, T. A. Canning, and M. I. Strawbridge, Journal of Applied Chemistry, Vol. 12, December, 1952, pp. 703-707.

Treadwell Corporation, 1700 Broadway, New York, N. Y. 10019, personal correspondence with S. B. Tuwiner, January 10, 1972.

SECTION XI

APPENDIX

A. Operating Records

During the period of Normal Operation January 1, 1971-June 15, 1971, and Special Operation August 2, 1971-October 26, 1971, accurate records were kept on the operation of the plant. These records include date, water consumption, power consumption, temperatures at all critical locations, feed rates, and iron and acid contents of influent and regenerated pickle liquor. The reduction of this data is shown in Table 18. This data includes gregorian date, hours of operation, cooling water consumed, and power consumed. At the same time records were kept of the Ferrous Sulfate Heptahydrate produced. The 118,143 pounds were produced from January 1, 1971-June 15, 1971, and 18,737 pounds were produced from August 2, 1971-October 26, 1971.

B. Market Survey of Ferrous Sulfate

1. Introduction

The Fitzsimons Steel Co. has installed a Keram Chemie-Lurgi Sulfuric Acid Regeneration Process at their plant in Youngstown, Ohio. This installation is Fitzsimons' response to the need to cease the dumping of pickle liquor from their plant into the Mahoning River. The regeneration unit not only recovers sulfuric acid--which can, in turn, be re-used in the pickling process--but also turns out a by-product called ferrous sulfate heptahydrate ($FeSO_4.7H_2O$). Fitzsimons cold-rolls steel bars, rods and coils from purchased hot-rolled stock. Annual output of roughly 40,000 tons results in "production" of approximately 110 tons per month of the ferrous sulfate by-product from the Keram Chemie process. At the present time, Fitzsimons is paying to have the material trucked away.

2. Objectives and Procedural Steps

The specific objectives of the study were these: (a) determine the principal end-use markets for ferrous sulfate; (b) measure the current size of each principal market--both on a national basis and within the "local" trading area; (c) determine price structures, distribution channels, delivery requirements, and packaging considerations; (d) draw conclusions regarding both the national and local markets--and make recommendations regarding the appropriate courses of action for Fitzsimons. Another "unwritten" objective of the work was to try and locate companies and/or governmental agencies with an interest in eventual purchase of the material from Fitzsimons. (As previously stated, Fitzsimons is currently paying to have the ferrous sulfate trucked away. If they can locate a firm that will take it "off their

TABLE 18
Operating Consumptions of Acid Recycle & Iron Recovery Plant

Date	Time Hour	Main Water Ft**3	Main Water Ft**3	Power 440 KWH	Power 440 KWH
7.	9.00	0.	0.	2.	4.
8.	11.00	66.	0.	3.	122.
11.	11.00	1029.	100.	1.	37.
13.	22.00	1123.	220.	5.	51.
14.	9.50	567.	80.	2.	19.
15.	8.00	349.	70.	1.	14.
18.	8.00	442.	70.	2.	11.
19.	7.50	689.	90.	2.	17.
20.	7.50	461.	60.	2.	23.
21.	7.00	12.	60.	1.	31.
22.	7.00	1146.	70.	2.	3.
23.	11.00	1093.	101.	4.	137.
25.	7.00	590.	70.	1.	118.
26.	8.00	831.	70.	2.	16.
27.	7.50	759.	60.	2.	83.
28.	8.50	504.	80.	2.	21.
29.	7.50	536.	60.	2.	7.
33.	7.50	477.	70.	1.	9.
34.	7.50	549.	60.	2.	16.
46.	6.50	370.	70.	2.	105.
47.	8.00	575.	70.	2.	4.
48.	8.00	669.	70.	2.	14.
49.	9.00	644.	70.	3.	115.
50.	7.00	572.	60.	1.	13.
51.	7.50	531.	60.	3.	24.
53.	8.00	597.	160.	3.	15.
54.	7.50	576.	50.	2.	4.
55.	9.00	1237.	70.	2.	9.
56.	16.50	1259.	100.	5.	37.
57.	5.00	1203.	100.	4.	35.
58.	12.00	822.	90.	3.	19.
60.	7.50	567.	40.	2.	24.
61.	5.00	1268.	110.	5.	31.
62.	6.00	1271.	110.	5.	29.
63.	17.00	1394.	120.	5.	17.
64.	7.50	489.	40.	91.	25.
67.	12.00	747.	1880.	3.	19.
68.	15.00	906.	80.	3.	49.
69.	6.00	1373.	90.	6.	21.
70.	6.00	1445.	0.	4.	31.
71.	17.50	1428.	90.	5.	46.
72.	13.00	890.	60.	2.	18.
74.	17.00	1365.	90.	5.	31.
75.	16.50	1137.	70.	4.	26.
76.	16.50	1141.	70.	4.	28.
77.	17.00	1012.	60.	4.	27.
78.	16.50	1156.	70.	4.	37.

TABLE 18 (Con't.)

Date	Time Hour	Main Water Ft**3	Main Water Ft**3	Power 440 KWH	Power 440 KWH
79.	12.00	545.	20.	2.	23.
81.	17.50	1117.	70.	4.	37.
82.	17.50	1226.	60.	5.	19.
83.	17.50	1237.	50.	4.	29.
84.	17.50	988.	50.	3.	35.
85.	17.50	1075.	70.	4.	18.
86.	12.00	441.	70.	3.	18.
88.	17.50	1176.	90.	4.	27.
91.	17.50	891.	40.	4.	20.
92.	13.50	750.	60.	3.	21.
98.	15.00	686.	150.	5.	57.
99.	12.00	452.	40.	3.	27.
104.	8.00	344.	20.	2.	12.
105.	16.00	678.	30.	4.	127.
106.	5.00	211.	40.	1.	121.
110.	15.00	1247.	50.	5.	125.
112.	5.75	516.	30.	2.	25.
113.	15.00	1157.	130.	3.	35.
114.	10.50	10823.	70.	3.	18.
116.	15.00	1312.	150.	4.	15.
117.	15.00	1040.	120.	4.	26.
118.	15.00	1242.	110.	4.	124.
120.	14.00	993.	130.	4.	34.
121.	10.50	648.	20.	2.	18.
124.	15.00	567.	100.	4.	39.
125.	14.00	640.	70.	4.	19.
127.	39.00	883.	100.	4.	24.
128.	10.50	510.	150.	2.	16.
130.	15.00	982.	110.	4.	14.
131.	14.00	653.	90.	4.	0.
132.	14.50	745.	828.	4.	121.
135.	12.00	707.	70.	4.	20.
137.	15.00	767.	110.	4.	118.
138.	15.00	894.	120.	3.	19.
139.	14.00	690.	130.	3.	18.
140.	15.00	677.	120.	3.	21.

hands"--hopefully for a price, it will considerably improve the economics of the installation--in addition to solving the pollution problem they faced prior to installation of the Keram Chemie process.)

Procedural steps taken during the course of the study were these:

1. Determine the basic objectives of the work.

2. The second step was a visit to see the Keram Chemie process in operation--and to set up a "sample" program whereby those firms expressing interest in the ferrous sulfate material could be furnished quickly with test-size samples.

3. Identification of: a) major producers of ferrous sulfate--and b) major firms selling the material in the U. S.--through public sources.

4. These firms were directly contacted in order to determine the size and segmentation of the national and local markets for ferrous sulfate.

5. Secondary sources were contacted in order to glean information regarding markets.

6. Within the "trading area" of Fitzsimons, (roughly a 60 mile radius), the twelve major cities were contacted regarding their current practices in water and/or sewage treatment. In addition, major distributors and other industrial users within the area were also contacted to determine relative sizes of other markets.

7. A sample and analysis program was set up--and there are currently nine cities and/or industrial firms actively testing the Fitzsimons' product.

8. The final step was the drawing of conclusions and the making of recommendations to deal most effectively with the ferrous sulfate disposal problem.

A total of approximately 70 field contacts were made during the course of the study. Opinions regarding markets, etc. tended to steer in much the same direction from most respondents. This is, of course, good, since it indicates that a solid "plateau" has been reached--and that the results of the study are truly indicative of the market situation as it exists. Fitzsimons was openly identified as the sponsor of the survey--and a number of unsolicited kind remarks were made by respondents regarding the efforts of Fitzsimons to deal with their pollution problems in a business-like manner. Cooperation from the respondents was excellent with only a very few exceptions.

3. National Markets

The following table reflects the production, shipments and dollar values of the ferrous sulfate "commercially-produced" in the U. S. during the period 1960-1967.

TABLE 19 - Production, Shipment, and Dollar Value Of Ferrous Sulfate "Commercially Produced"*

Year	Production (000's tons)	Shipments (000's tons)	Percent: Shipments to Production	Value (000's of $)
1960	152.2	94.3	63%	$ 955
1961	144.1	94.5	64%	931
1962	154.9	102.8	66%	1,004
1963	159.8	100.9	63%	955
1964	172.6	101.4	58%	955
1965	183.9	99.7	55%	983
1966	208.7	120.3	57%	1,091
1967	196.6	112.0	57%	1,023
Estimated				
1975	275-300	150-175	Same	$1,300-$1,500

*Includes only "commercially-produced" or so-called "merchant" product

As can be seen in the table, commercial production of ferrous sulfate has grown from an annual level of approximately 150,000 tons annually in 1960--to around 200,000 tons per year in 1967. (1967 was the most recent yearly figure available in secondary source material.) A very important consideration is reflected in the comparison of the "shipments" column to the "production" column. The percentage of total production that is actually sold and shipped ranges from 55% up to only 66% of total during the years shown. This includes interplant transfers where companies produce ferrous sulfate for internal usage in other products. Further, in addition to the 200,000 tons produced commercially each year--it is estimated by reliable trade sources that an additional 1.2 million tons of ferrous sulfate is generated as a by-product in steel pickling--and 1.5 million tons are generated as a by-product in the production of titanium dioxide. These by-products are generally in slurry or "wet" form--not nearly the same quality as the commercial grades which are basically dry as far as sulfate water is concerned. However, the figures indicate the massive surplus of product available in this market--with the result that the by-product grades are currently being disposed

of by some positive cost method -- such as high pressure deep well injection. On the other hand, the Fitzsimons by-product from the Chemie process is more in line from a physical standpoint with the commercial grades currently on the market. This makes the product much more salable since it is more pure--and doesn't contain the great amounts of surface water that virtually restrict the shipping radius to the immediate locale. (It should be noted that the amount of ferrous sulfate generated as a by-product in the pickling of steel is decreasing over the years as the major mills switch from the use of sulfuric acid to hydrochloric acid for pickling. The major reason for the switch is that much less volume of HCl is used in pickling--with the result that there is a substantially lower quantity of material to dispose of than when sulfuric acid is used.)

a. Producers

There are five commercial producers of ferrous sulfate in the U. S. The following table reflects their current production plants and their maximum annual capacities:

TABLE 20 Commercial Producers of Ferrous Sulfate

Producer	Capacity (In tons)
American Cyanamid Co. Piney River, Va.	25,000
Cosmin Corp. Baltimore, Md.	40,000
National Lead Co. Sayreville, N. J.	100,000
National Lead Co. St. Louis, Mo.	100,000
Pfizer, Inc. Easton, Pa.	50,000
Pfizer, Inc. E. St. Louis, Mo.	25,000
Steel Chemical Co. Lemont, Ill.	15,000
TOTAL	355,000

National Lead Co. is the major commercial producer of ferrous sulfate--currently owning and operating nearly 60% of the industry's total

capacity; Pfizer is second--followed by Cosmin, American Cyanamid and Steel Chemical Co.

Another point to notice is that the production capacity of the industry in commercial-type plants (355,000 tons) is considerably higher than the current rate of production--which runs approximately 200,000 tons annually. Again, this point is made to draw emphatic attention to the fact that the ferrous sulfate industry is suffering from a production glut--not a shortage of materials.

b. Market Segmentation

Of the current annual commercial output of ferrous sulfate of approximately 200,000 tons, the percentage of total flowing into the various "absorbing" industries are these:

TABLE 21
Distribution of Ferrous Sulfate Consumers

Market Segments	Percent of Total Tonnage
Iron Oxide Pigments	55%
Ferrites	30%
Water-Sewage Treatment	5%
Others (Fertilizers; stock feed; inks)	10%
	100%

Sources: U. S. Department of Commerce; "Oil, Paint and Drug Reporter"

Iron oxide pigments represent the biggest single commercial market for ferrous sulfate--currently absorbing approximately 55% of total annual output. The material is used in the manufacture of paint. (Many of the major paint firms produce their own titanium dioxide--and utilize the ferrous sulfate generated in this process rather than buying all of their needs outside. However, paint producers still represent the largest single group of purchasers of commercial grades.) Another 30% of the commercially-produced material is used in the production of ferrites. Ferrites are used primarily in the manufacture of electronic hardware--including inductors, transformers, microwave systems, antenna rods, etc. Ferrous sulfate is converted into ferric oxide from which the ferrites are then produced.

A big surprise came in the percent of total commercially produced ferrous sulfate that is being used in water and sewage treatment. It was felt when the survey was commenced that this might be the largest single market--at least from a tonnage absorption standpoint. However, only 5% of the merchant total is absorbed in these applications. (Large amounts of the pickling and titanium dioxide by-product are used in

this application in the "wet" form. However, this is only in areas where it is readily available and has to be shipped only short distances such as in Chicago, Milwaukee and Detroit.) Looking into the future, the potential market for ferrous sulfate of commercial grades (which, for all intents and purposes included the Fitzsimons output) in water and sewage treatment is expected to grow significantly. Many of the plants contacted are still in primary treatment stages. Increasing stringency of pollution laws is forcing these people to consider secondary--and even tertiary treatment, in many cases. Chemists throughout the industry informed us that when this happens, the demand for the "dry, pure" product (of the type rendered by the Keram Chemie Process) will intensify greatly since it is considered an excellent product for flocculation in secondary and "polishing" operations--particularly when used in combination with synthetic polymers.

The remaining 10% of the commercially-produced ferrous sulfate flows into a number of diverse uses including: fertilizer (particularly in areas where increased acidity of soil is required): animal feeds; the production of inks, dyestuffs, etc. However, all of these applications require "special" grades that would most probably require "special" grades that would most probably require some additional processing beyond the original state in which the Fitzsimons product is recovered (drying, bagging, etc.).

4. Local Markets

After examining the characteristics of the market from a national standpoint, it became obvious that the best chance for Fitzsimons to sell their ferrous sulfate was within a "logical" shipping radius of the plant in Youngstown, Ohio. First, since Fitzsimons has no interest at all in becoming involved in a bagging operation, etc. the material must be moved in some bulk form. Further, Fitzsimons would prefer to steer clear of any further processing of the material (drying, blending, etc.). These factors virtually dictate that the best chances for selling the product under "where is, as is" conditions exist within a logical bulk shipping radius of the Fitzsimons plant in Youngstown, Ohio.

In order to determine how far the material could actually be shipped in bulk before it came into "head-to-head" competition with ferrous sulfate from other sources--or a substitute material, contacts were made with many of the major chemical firms presently handling ferrous sulfate through their distribution setups. In the opinion of these persons, the logical shipping radius for bulk material of the type produced at Fitzsimons would be in the 75-100 mile maximum range. However, this point is not purely definitive. For example, if the Fitzsimons produce should prove to have a chemical make-up and/or physical characteristics that happen to fulfill a specific need for a user in a different part

of the country--it is possible that the particular user would be willing to bear the cost of shipping the material long distances in bulk. However, this is considered an unlikely possibility by most of the "expert" merchandisers in the field.

As a result, a study of the market for ferrous sulfate within a 75 mile radius of Youngstown was conducted in order to try and determine the most active potential prospects for the Fitzsimons material. The results of the survey are presented in this section.

a. Market Segments

Each of the major national markets for ferrous sulfate was investigated within the Youngstown trading area (75 mile radius). A brief synopsis of the results is reflected in the table on the following page.

TABLE 22 Current Usage and Relative Market Potential of Ferrous Sulfate In The Youngstown, Ohio Trading Area

Major Market Segments	Current Usage of Ferrous Sulfate	Relative Market Potential
Pigments	All captive (1)	Poor
Ferrites	None produced in area	Poor
Sewage	None--better chance in future years	Poor--but improving
Water	None	Fair
Others (2)	Negligible	Poor

(1) PPG, Glidden and Sherwin-Williams all either produce their own needs from titanium dioxide--or buy outside through Eastern firms on long-standing contractual basis.

(2) Very few firms producing feed, fertilizers within the area. O. M. Scott Co. of Marysville, Ohio, uses only ferrous ammonia sulfate--have gotten away from the use of straight ferrous sulfate.

As shown in the table, the current usage of ferrous sulfate within the Youngstown trading area is virtually nil. There are only a few firms located within the area that produce fertilizers, feeds, etc. None of these expressed an interest in the material--and none are currently using ferrous sulfate in their products. This means that the only real potential for the material lies in the sewage and/or water treatment systems of the various cities within the shipping radius of 75 miles. Following is a brief report of the current activities in the 13 major communities in the area:

Pittsburgh, Pa.

ALCOSAN (Allegheny County Sewer Authority) advised that they are currently experimenting with an 18 gallon per minute test unit working with spent pickle liquors from the steel mills in the Pittsburgh area. However, they are quite interested in the Fitzsimons product because of its dry form and apparent purity. Alcosan chemists admit that they are under some pressure to try and help out the Pittsburgh mills by finding some useful purpose for their spent liquors. However, as they move into secondary treatment, they are desirous of testing the "pure" product of Fitzsimons against the impure spent liquors of the local mills. (Alcosan has been furnished a 100 lb. sample of the Fitzsimons product for testing in the near future.) There are a number of water companies in the Pittsburgh area. American Water Works operates 86 water purification plants in this area. We were informed that many have waters with a high pH of 9-10 -- and that the ferrous sulfate should

probably be easily oxidized in these systems. They were furnished a 5 lb. sample and intend to run jar tests in late April. Both of these organizations (Alcosan and American Water Works) have also been furnished the latest chemical analysis of the Fitzsimons material.

Akron, Ohio

The Sewage Department is presently using only polymers as flocculants although the entire matter of chemical additives is under study by water consulting engineers. The same holds true for the Water Department. The whole matter of considering other materials is over a year away for Akron. No interest in samples at this time.

Cleveland, Ohio

Cleveland's sewage treatment setup is broken down into three geographic segments--called westerly, easterly and southern. All follow much the same practices. Ferrous sulfate does not fit into their plans. They use alum in great quantities but are trying to get away from this practice since they feel that any "sulfate" causes problems with their equipment. They have been approached by Republic and the other steel firms in the Cleveland area to work with their liquors but have had no success in their testing programs. The Water Department gives much the same story--no current usage and no particular interest at this time.

Mansfield, Ohio

Sewage Department is moving into secondary treatment and is currently using 2-3 carloads per year of anhydrous ferric chloride as a coagulant for sludge. Has no idea if ferrous sulfate would do a better job--and would be interested in a sample after they have run the chloride for about six months. In water purification, Mansfield handles about 3 billion gallons per year. They currently use alum and caustic soda as chemical additives. They have never tried ferrous sulfate since their pH is low and they feel that alum is better under these circumstances. No interest in testing program at this time.

McKeesport, Pa.

We included one of the Pittsburgh suburbs that has an independent water company. They have experimented with ferrous sulfate through jar tests only. The stability was good but they are dubious about the resulting color.

Wheeling, W. Va.

The Wheeling Water plant claimed that they have used ferrous sulfate for the past 8-9 years as a coagulant with lime. The product that they are using is "Ferrifloc" purchased from the Opalco Co. in Pittsburgh. They

process 8 million gallons per day with approximately 8 parts per million of "Ferrifloc" and use about 90 tons per year--received in 35-45 ton carloads in bulk, ivory in color--and they think it has been successful because of the high acidity of the water (9.2). We checked out the Opalco Co. in Pittsburgh (their supplier) and find out that "Ferrifloc" is actually ferric sulfate rather than ferrous. The two products are different. We feel that the Wheeling people we talked to misinterpreted or misunderstood the fact that the Fitzsimons product was ferrous, not ferric. The Wheeling Sewage Plant uses primary treatment only at this point. As a result, chlorine is their only additive. They feel that they will be forced to move into secondary treatment within two years, and at that time they would be willing to consider ferrous sulfate in a testing program.

Canton, Ohio

No ferrous sulfate used in either water or sewage treatment facilities. Sewage is into secondary treatment--but are considering the possibilities of going to the Zimpro Process which obviates the need for chemical additives.

Youngstown, Ohio

The Youngstown Sanitary District handles all of the water purification for the area. At the present time, they are using alum as a coagulating agent in their system. The amount of water processed is about 38 million gallons per day @ 8.5 parts of alum per million--which amount to about 500 tons per year. It is purchased in bulk carloads. The water in the Youngstown system is a very high pH--in excess of 10--and it was suggested that the Fitzsimons product might work well to reduce the pH. Arrangements have been made for a sizable sample to be furnished.

Cincinnati, Ohio

Cincinnati uses polymers in their sewage treatment--claiming that most newer plants are being designed for the use of polymers in place of chemicals. The next step is to eliminate chemical and synthetic additives altogether. Cincinnati now has a pilot plant utilizing some type of thermal treatment that does just that. In water treating, Cincinnati uses ferric sulfate and alum. They do not use any ferrous iron salts nor polymers. They have no interest in testing the Fitzsimons product at the present time.

Columbus, Ohio

In their water treatment system, Columbus currently uses alum and chlorine--no other chemicals. In sewage, they use a combination of polymers and ferric chloride. They have tested sulfates for sewage

treatment but claim that they destroy the nylon filters in their process. No present interest in treating new additives at present time.

Warren, Ohio

In water treatment, Warren used to use "iron salts" many years ago. However, they switched over to alum because it produces less sludge in their system. They use 200 lbs. of alum per hour--or 77 tons per month. It is delivered in 20 ton truck loads from the Cleveland area. In the treatment of water, Warren used ferric chloride for years. They have never switched to ferrous sulfate since they do not feel it is as efficient. However, at the present time, they are using an antionic polymere which produces much less sludge than did the ferric chlorides. This relieves the pressure on the sludge filters. One point is this: ferrous sulfate is excellent for use in sewage treatment when an abundance of phosphate is present. Unless the government cracks down on detergents, the use of ferrous sulfate and chloride may become more popular in the future.

Sharon, Pa.

Buy water from Shenango Valley Water Co. These people report that they have tried ferrous sulfate and that it does not work well with Shenango River water because of the low alkalinity of the river's water. Further, ferrous sulfate leaves too much turbidity and does not remove iron traces efficiently. They use alum which they find takes out color and provides excellent coagulation. Usage amounts to approximately 500 tons per year.

In sewage disposal, Sharon at one time used about a barrel a day of ferric chloride and lime--but now have arranged to have tank trucks haul away the sludge from the digesters. They have never used sulfates and are currently interested in testing same.

Erie, Pa.

At the present time, Erie does not have much of a treatment facility for sewage. They are in the process of planning new facilities however--and will be interested in testing the Fitzsimons ferrous sulfate in about one year because they do have a problem with phosphates. In water treatment, they have tried ferrous sulfate but it reduced the water to pH far below their tolerable limits of 7.3-7.5. In addition, the sulfate resulted in some color transfer or "red water" was it was termed. As a result, Erie uses alum for coagulation. They feel that the use of ferrous sulfate would be restricted when lake water is used--but might prove valuable in highly alkaline water which generally comes from ground sources.

In addition to the above cities that lie within the 75 mile trading radius of Youngstown--Detroit, Chicago and Milwaukee were contacted to see what might be going on in these areas where steel is produced in quantity. In Detroit, the water treatment people were using alum at a dosage rate of 7 parts per million. Both the water and sewage treatment facilities are ferric chloride for phosphate control. The material is received from Great Lakes Steel Co. and Ford Motor Co.'s steel facilities in River Rouge. Both use hydrochloric acid pickling--and currently give the material to the City for the cost of hauling it away. However, starting 8-1-71, the city will pay $1.25 per ton plus hauling costs--to both parties. They have no source of ferrous sulfate in Detroit since the mills have gone over to HCl pickling. As a result, Detroit wants a sample of the Fitzsimons material--and that has been sent.

Milwaukee used to use only ferric chloride in both water and sewage treatment. Now they are also using ferrous sulfate since it is delivered without cost. Phosphate control is the major justification for the usage.

Chicago uses ferric chloride--plus some ferric sulfate. They have tried polymers but found them excessively expensive. The sulfates they use are purchased co-mercially since the spent pickle liquor available from the local mills is too unpredictable and impure for safe usage.

b. Testing Programs

It is clear from our coverage of the 75 mile trading area that there is no "unfilled" or unsatisfied demand for ferrous sulfate within the area. As a matter of fact, the market is glutted--as it is nationally. While this does not sound good, there is one very important factor that must be kept in mind. The Fitzsimons product is considered far above the level of spent pickle liquor in quality and physical characteristics by those that have seen and tested it. Further, the application of a chemical additive to a sewage and/or water treatment setup cannot be proved successful or unsuccessful without testing. As several chemists pointed out--the application of a chemical additive to a process is much like the selection of a drug for a patient by a physician. While there may be six or seven drugs on the market from various pharmaceutical houses with the same generic name--the physician must actually experiment with the drugs to see which one does the job he wants done for his patient. The same holds true with ferrous sulfate. Since the Fitzsimons product is considerably different than the spent pickle liquors currently being tested in many places, the final prospects for disposition of the material will only be known after tests are run by various interested parties.

Those of us involved in the survey are convinced that the material can be sold--and at the very least, disposed of at no cost to Fitzsimons. There are currently nine companies and/or cities set up to test the material. Several are very optimistic about their possibilities of using the material in sizeable quantities. The test situations that are now under way--and their current status--are as follows:

Mahoning Valley Sanitary District, Youngstown, Ohio

The Chief Chemist has received five pound sample--and more recently, several tons of material for testing in water treatment. Latest reports are that the material is testing well, and that there are good possibilities that Mahoning Valley may be able to use a substantial portion of the monthly Fitzsimons generation of about 110 tons.

Allegheny County Sanitary Authority (ALCOSAN), Pittsburgh, Pa.

A 100 pound sample has been delivered to the Assistant Superintendent of the plant. They are currently testing spent pickle liquor from the Pittsburgh area mills and plan to run comparative tests with the Fitzsimons material late in April.

American Water Works Co., Pittsburgh, Pa.

Delivered a five pound sample of Fitzsimons ferrous sulfate to the Chief Engineer, at their Mt. Lebanon Boulevard location. They operate a number of plants that are handling water with a very high pH value and they feel that the sulfate would oxidize easily and perhaps work well. Mr. Catlin is the man who will run jar tests on waters from several of their plants starting in late April when he returns from a leave.

Pittsburgh Water Company, Pittsburgh, Pa.

Received a five pound sample and have run two jar tests. The Chief Chemist reported that tests were "negative" and that the material would not be useful in their process.

Hampshire Chemical Division of W. R. Grade Co., Nashua, N. H.

The Vice-President and General Manager requested a one pound sample for test--plus a chemical analysis. The sample is in his hands but no report has been received at the time of this writing.

Traylor Chemical and Supply Co., Orlando, Florida

Contact made with the General Manager. This company is a very large distributor of chemicals operating around the entire Southeastern states.

They expressed much interest in the material for use in fertilizer blends for the citrus groves where they need added acidity in the soil. A one pound sample has been sent. No word back as yet.

By-Products Processing Co., Inc., Baltimore, Maryland

A one pound sample has been forwarded to above named company. The initial report is that they feel they "might" be able to use the entire output. However, no report on the sample has been forthcoming as yet.

Drew Chemical Co., Boonton, N. J.

One pound sample sent to above company for testing. This is a large basic chemical company and they feel that they may be able to use the material if it "tests out" properly. No report back at time of writing.

City of Detroit Metro Water District, Detroit, Michigan

A one pound sample sent to the Chief Water Treatment Chemist. Will test and report back. No word as yet.

5. Other Sales Factors

Some of the miscellaneous factors surrounding the marketing of ferrous sulfate uncovered during the survey were these:

1. Chemists and technical people at the various chemical companies and in the city water and sewage treatment departments are the primary "purchase influencers" with regard to the approval of a particular chemical for usage within their respective systems. This is where the original marketing "hurdle" lies. Only after the technical people have tested and cleared the material, the Purchasing Department enters the picture and price "negotiations" begin.

2. Packaging requirements vary by market. If the material is to be sold to chemical companies (particularly to local distributors), there is a good chance that they will want it to be packed in 50, 75 and 100 pound bags. If selling to a water or sewage treatment plant, it is much more likely that they will want to handle the material in bulk form. Pneumatic handling systems for either box cars or trucks are popular for handling of reasonably dry materials. This permits "pumping" into overhead bin systems from which the materials can be gravity-fed into the system or into smaller transporting vehicles.

3. Prices for ferrous sulfate vary considerably based on quality. Commercially-produced grades generally command somewhere between $20 and $40 per ton, FOBm carload prices, bagged. On the other side of the coin, the so-called ferrous sulfate in spent pickle liquor form is a

drug on the market and is often given away free of charge. A logical price for the Fitzsimons material is judged to be in the range of $10 per ton by those that have seen and tested the material. However, price is settled by "negotiations" between buyer and seller. As might be expected, prices have generally been "soft" in the ferrous sulfate market over the years due to the extreme excess of supply over demand.

4. Delivery requirements in the chemical industry have slowly changed. Users are moving more towards a shorter inventory situation and requiring suppliers to deliver more frequently--thus reducing their inventory costs at the expense of the supplier.

5. The degree of interest in a "new" supplier of ferrous sulfate is minimal. However, if the product to be offered is physically superior to those on the market at the present time there is a good possibility that it might fit into someone's process. If the product is just another "me-too" situation, then no interest exists.

As was previously stated, there is more than a passing interest in the Fitzsimons product. First, potential users feel that is is far beyond the normal pickling by-product in quality and physical characteristics--and therefore, has a much stronger commercial appeal than does the output of some of the Pittsburgh mills, for example. Secondly, a number of potential users expressed admiration for Fitzsimons with regard to their positive action to handle their pollution problems in a more "intelligent" way than many other industrial firms. As a result, the firms and cities contacted seem much more inclined to seriously try and find a useful application for the Fitzsimons ferrous sulfate than for the normal spent pickle liquor that so many mills are trying to dispose of in any manner possible.

SELECTED WATER RESOURCES ABSTRACTS

INPUT TRANSACTION FORM

1. Report No. 2. 3. W

4. Title SULFURIC ACID AND FERROUS SULFATE RECOVERY FROM WASTE PICKLE LIQUOR

5. Report Date

6.

7. Author(s)

Seyler, J.K.; Thornton, W.E.; Householder, M.K.,PhD

The Fitzsimons Steel Company, Youngstown, Ohio

8. Performing Organization Report No.

9. Project 12010 FNM

10.

11. Contract/Grant

12. Sponsoring Organization

13. Type of Report and Period Covered

15. Supplementary Notes

Environmental Protection Agency report number, EPA-660/2-73-032, January 1974.

16. Abstract

This report describes the investigation of the process variables of a facility for the treatment of spent sulfuric acid pickle liquor. The process is based on the vacuum crystalization technique developed by Keram Chemie-Lurgi of Germany. It recovers ferrous sulfate heptahydrate as a neraly dry solid by-product and recovers the unreacted acid for recycle to the pickling tank thus eliminating the discharge of spent pickle liquor and rinse water.

The full scale facility achieved acid recoveries equivalent to 21.2 tons/day of 12% sulfuric acid for recycle and an average of 115 lbs/hour of 99.56% $FeSO_4 \cdot 7H_2O$ by-product. Capital costs were $191,710 or $19,739/year based on a fifteen year life at 6% interest. Net operating costs were $42,320/year including a $21,400/year benefit from acid recovery. (no credit of $2,300/year of ferrous sulfate heptahydrate was included due to the nationwide excess production over market absorbing ability). The total costs were $62,059/year, $1.75/ton of steel pickled, 0.614¢/$ total sales, or $12.93/cubic meter of wastes treated.

17a. Descriptors

*waste treatment, *industrial wastes, sulfates, crystallization, centrifugation

17b. Identifiers

sulfuric acid, spent pickle liquor, ferrous sulfate heptahydrate, acid recovery

17c. COWRR Field & Group 05D

18. Availability	19. Security Class. (Report)	21. No. of Pages	Send To:
	20. Security Class. (Page)	22. Price	WATER RESOURCES SCIENTIFIC INFORMATION CENTER U.S. DEPARTMENT OF THE INTERIOR WASHINGTON, D.C. 20240

Abstractor Institution

☆ U.S. GOVERNMENT PRINTING OFFICE: 1974— 546-317/286