EPA-R2-72-073
DECEMBER 1972

Environmental Protection Technology Series

Solvent Extraction Status Report

National Environmental Research Center
Office of Research and Monitoring
U.S. Environmental Protection Agency
Corvallis, Oregon 97330

RESEARCH REPORTING SERIES

Research reports of the Office of Research and Monitoring, Environmental Protection Agency, have been grouped into five series. These five broad categories were established to facilitate further development and application of environmental technology. Elimination of traditional grouping was consciously planned to foster technology transfer and a maximum interface in related fields. The five series are:

1. Environmental Health Effects Research
2. Environmental Protection Technology
3. Ecological Research
4. Environmental Monitoring
5. Socioeconomic Environmental Studies

This report has been assigned to the ENVIRONMENTAL PROTECTION TECHNOLOGY series. This series describes research performed to develop and demonstrate instrumentation, equipment and methodology to repair or prevent environmental degradation from point and non-point sources of pollution. This work provides the new or improved technology required for the control and treatment of pollution sources to meet environmental quality standards.

For sale by the Superintendent of Documents, U.S. Government Printing Office, Washington, D.C. 20402
Price 75 cents Domestic postpaid or 50 cents GPO Bookstore

EPA - R2-72-073
December 1972

SOLVENT EXTRACTION STATUS REPORT

Luther F. Mayhue

National Petrochemical Wastes Research Program
Robert S. Kerr Environmental Research Laboratory
P. O. Box 1198
Ada, Oklahoma 74820

Project 12020 EWZ
Program Element 1B2036

NATIONAL ENVIRONMENTAL RESEARCH CENTER
OFFICE OF RESEARCH AND MONITORING
U.S. ENVIRONMENTAL PROTECTION AGENCY
CORVALLIS, OREGON 97330

ABSTRACT

The history, basic principles, process application, laboratory approach, and grant program concerning solvent (liquid-liquid) extraction was investigated in relation to its application to industrial effluent waste water systems. A search of the literature reveals that little consideration has been given to solvent extraction as a feasible waste treatment method. Various aspects of solvent extraction technology are presented along with a number of industrial wastes which should be considered for treatment. One of the areas of greatest need for research concerning industrial waste water treatment is in the removal of refractory, and taste and odor causing compounds. Application of solvent extraction to waste systems containing low concentrations (0.05%) may be feasible on a "swap out" basis or in conjunction with biological, adsorption, or incineration treatments as a pretreatment step. Application of solvent extraction to waste systems for recovery of salable products to offset cost of treatment should be studied for feasibility. Accomplishments and plans regarding industrial research projects are presented.

CONTENTS

Section		Page
I	Conclusions	1
II	Recommendations	3
III	Introduction	5
IV	History of Solvent Extraction	7
V	Solvent Extraction - Basic Considerations	9
VI	Solvent Extraction Process Application	13
VII	Solvent Extraction Equipment	17
VIII	Solvent Extraction As Applied to Waste Water Renovation	25
IX	Laboratory Bench Scale Approach	27
X	Pilot Plant Approach	29
XI	Research Program	33
XII	Grant Program	35
XIII	References	37

FIGURES

		PAGE
1	Mixer-Settlers	19
2	Sieve or Perforated Plate Column	20
3	Spray Towers (Columns)	21
4	Baffle Plate Column	22
5	Packed Column	23
6	Rotating Disc Contactor	24

TABLES

No.		Page
1	Process Wastes (27)	31

SECTION I

CONCLUSIONS

1. The opportunity and technology are available for successful application of solvent extraction to industrial waste water treatment.

2. The industrial climate is favorable to sound pollution abatement or waste treatment processes.

3. One of the areas of greatest need for research concerning industrial waste water treatment is in the removal of refractory and taste and odor causing compounds.

4. Application of solvent extraction to waste systems containing low concentrations (0.05%) may be feasible on a "swap out" basis or in conjunction with biological, adsorption, or incineration treatments as a pretreatment step.

5. Application of solvent extraction to waste systems for recovery of salable products to offset cost of treatment should be studied for feasibility.

SECTION II

RECOMMENDATIONS

1. Additional research should be conducted for the investigation of water renovation by solvent extraction as applied to reduction of halogenated hydrocarbons and other refractory compounds which affect potable water supplies and aquatic and marine life with respect to tainting and odors or toxicological manifestations either directly or through biological magnification processes.

2. A two year investigation (Industrial Pollution of the Lower Mississippi River in Louisiana, EPA Region VI, Surveillance and Analysis Division, Dallas, Texas, April 1972) into the deterioration of water quality in the Lower Mississippi was completed by the Environmental Protection Agency's Lower Mississippi River Basin Field Station during mid 1971. This study relates industrial pollution to river water quality. In view of the findings in this study, an extended and reinforced program of EPA research into advanced waste treatment technology for the protection (and rehabilitation) of the Lower Mississippi River, delta, marsh, and tideland areas from contamination by industrial wastes should be expedited.

3. Research should be undertaken on a definitive basis for the survey of industrial manufacturing process wastes from the organic chemical industry included in the listing of 50 volume chemicals to determine possibilities for application of solvent extraction. This project should be directed by an individual knowledgeable in extraction technology.

4. A continuing in-house study program by the Environmental Protection Agency's research staff should be initiated for conducting solvent extraction research studies as related to waste water renovation. This program would minimize the normal funding mechanism as well as supporting manpower requirements.

SECTION III

INTRODUCTION

Because of the water quality standards established by the various states, the Federal Government, pollution abatement legislation, and policies of the Federal Government, the industrial community has become increasingly aware of its responsibility to promote the conservation of the environment in which its plants operate. Technical studies of liquid waste treatment, as well as solid wastes and air emission studies, have been initiated to minimize detrimental impact on the environment. In the forefront among these studies has been an inquiring look at secondary waste treatment as traditionally viewed: The stabilization or conversion of organic matter in liquid wastes by processes of biosynthesis and respiration (1).

Since biological treatment has been applied successfully in municipal type waste processes for many years, the logical course of events led to an examination of this treatment method for possible expansion of the techniques to industrial wastes of increasing complexity. This treatment application, as well as application of other processes, has been the object of broad scale investigation. In many instances, biochemical treatment has been found to be unsuitable in its adaptation to industrial wastes, due to the toxic or refractory nature of many of the organic and inorganic compounds common to most present day plant effluent streams.

Initial limitations of this time honored biochemical process to treatment of refractory chemicals has led to consideration and investigation of fields of physical and physicochemical separation processes. A number of processes have been found which, under controlled circumstances, will separate or change chemicals not easily changed or destroyed by biological treatment. A good many of these processes fall into the separation category.

Solvent extraction is one such process which, alone or in combination with other processes, has promise for removal of refractory compounds in either high or low concentrations.

SECTION IV

HISTORY OF SOLVENT EXTRACTION

Nature rarely provides a raw material in pure form and few processes produce pure products. Because of this thoughtless provision of nature and the ineptitude of chemical synthesis, physical separation has become the most important single industrial process. The petroleum, chemical, and petrochemical industries, in general, have large investments in separation equipment and spend even more in operation. The more complicated our industrial economy becomes, the more different are the materials required in relatively pure form for feed stock, and the more finished from by-products and impurities.

In definition, separations considered here are those separations where mixtures are divided into pure compounds or at least into two or more fractions having different compositions by processes sometimes classified as "diffusional or mass transfer" operations (2). Common among these processes are fractional distillation, fractional crystallization, solvent extraction, adsorption, absorption, evaporation, etc.

Of these separation processes, solvent extraction has had, by far, a more marked impact on civilization than any of the other separation processes. In domestic and public service, the practice of bathing and similar washing, cleaning, and a great part of food preparation operations can be placed in the category of solvent extraction. This same process of solvent extraction has had its impact on the petroleum refining and chemical community as well. Solvent extraction may be defined broadly as a separation process in which two or more immiscible or partially immiscible fluids are brought into contact for the transfer of one or more components (3) from one fluid to the other.

Prior to about 1933, solvent extraction, as related to petrochemical industrial processing, was known only in the laboratory--effective methods of recovering solvents had not as yet been developed. One possible exception is the classical Benzene-Caustic-Dephenolization Process by Pott and Hilgenstock (4)--although this extraction process was used in coke oven plants.

After solvent recovery adaptation to chemical processing and industrial acceptance, information in the literature by 1949 or 1950 was still meager enough to summarize all of it regarding liquid-liquid extraction through definition of equipment alone (5). Industrial use was still generally limited to systems unsuited to distillation (6)--materials of very close volatility, such as the separation of aromatics from aliphatics in a particular petroleum cut. In the United States, among the first uses of solvent extraction in the early years was the separation of a general group of offensive materials or hydrocarbons from oil, thereby saving in the cost of acid treatment. The extraction processes gave higher yields of superior products with salable reject materials, whereas the acid sludge from sulfuric acid treatment was (is) a nuisance and a disposal problem.

Just as vacuum distillation permitted the processing of black crude oils for lubricants, so the solvent processes tended to erase the old crude oil marketing system by which only a few crude oils were considered satisfactory for lubricant manufacture. By solvent methods, the original properties of the oil were "changed" so that a uniform grade of oil could be manufactured from a wide variety of crudes (7). From the removal of the dark resinous materials from lube stocks, diesel fuel, and solvents to the removal of unsaturated and aromatic hydrocarbons from kerosene and the removal of mercaptans from gasoline, solvent extraction has progressed to present-day technology. Today, making use of preferential solubility of various components between two immiscible or partially immiscible solvents, extraction competes with distillation, crystallization, absorption, and chemical reaction in quality, if not in quantity. Present applications of extraction include refining of petroleum, chemicals, nuclear fuels processing, vitamin and antibiotic purification, and refining of vegetable oils. Close boiling and freezing points, other unsuitable physical properties, and such considerations as heat sensitivity justify the use of extraction in many separation processes. In fact, the necessary separations may be very difficult or even impossible to achieve by other processes. The refining-petrochemical industries are unquestionably the largest users of solvent extraction. They use the greatest variety of extraction processes and equipment and treat a larger quantity of feed material than all other industries combined. Nevertheless, few extraction processes involve separation from water, and almost none involve water as the major (bulk) phase.

Solvent extraction should be particularly attractive when applied to relatively concentrated wastes segregated from the common waste water system. Thus, particularly objectionable wastes may be eliminated before contamination of the entire disposal system. In addition, if the contaminate is a product of commercial value and in reasonable concentration, extraction will offer the possibility of reduced unit treatment costs and/or additional profit through sale of recovered products.

Therefore, since solvent extraction is used by practically every branch of the refining-petrochemical industry; and since little has been done on its application to waste water treatment, its application to industrial wastes is a natural step. Just as solvent extraction was instrumental in elevating the naphthenic base crudes to the position of a paraffinic sophisticate, so may solvent extraction also be instrumental, through advanced waste treatment, in reaching the ultimate objective of waste water renovation for direct reuse (8, 9)--thereby solving both problems of water supply protection and waste water treatment simultaneously.

Solvent extraction will be one element in a closed-loop system of water recycle which will insure enough water for all in places of high demand. It is estimated that the United States will need one trillion gallons of water each day by the year 2000 when the population reaches 300 million (10).

SECTION V

SOLVENT EXTRACTION - BASIC CONSIDERATIONS

Fundamentally, solvent (liquid) extraction is a method of separating the components of a solution. The separation of a mixture by extraction requires that the constituents have different relative solubilities in two immiscible, or only partially miscible, liquid solvents. The ratio of the concentrations of a particular dissolved substance (solute) in two coexisting liquid phases at equilibrium is constant and is called the distribution coefficient (6) $D_i = Y_i/X_i$. Y_i and X_i are the concentrations of i (i = some component) in the conjugate phases. Conventionally, the Y phase is the one in which the key solute is preferentially soluble, thus giving a distribution coefficient of more than unity for this component. When the separation of two components in a mixture is under consideration, the ease of separation is conveniently measured by the separation factor, a, which is the ratio of the distribution coefficients of the two components between the two solvents (note the equivalence to relative volatility in distillation): $a_{ij} = D_i/D_j$. If the components form ideal solutions in each phase, the distribution coefficient and separation factor will be constant and independent of the actual concentrations of the solutes. This rarely occurs in practice, and D and a can be expected to be functions of absolute concentration. In addition, the distribution coefficient for a particular component between two solvents is usually a function of the nature of the other components present and their concentrations (6).

It may be seen, therefore, that all separations, such as distillation, extraction, etc., are basically analogous. Industrial application of new separation processes to old separations, or of familiar separation processes to new separations, becomes much easier to visualize when the inherent similarities are realized. Certain criteria must be used and certain limitations are always present regardless of the separation process applied. Nevertheless, there are no different problems between the "difficult" and "easy" separation processes, only the emphasis is different. For instance, in easy separations attention is directed toward controlling minor impurities while the main separation is treated somewhat incidentally. In difficult separations, attention is directed toward the mechanism of the separation transfer; minor impurity problems are there but their solution is secondary to that of the primary separation.

In every case, two phases are passed countercurrent to each other. Means are provided to bring the phases into equilibrium with each other while simultaneously the countercurrent flow continuously separates phases approaching equilibrium. Finally, the concentration of one component relative to another component of the mixture to be separated is less in one "equilibrium" phase than in the other.

The means used to perform these fundamentally similar operations differ enough to give rise to separate and distinct treatments in textbooks and handbooks. These distinctions arise in part from the development stages of the several separation methods. Only in comparatively recent

times have enough fundamental data been accumulated to explain the method of operation of these processes, and the fund of data is still inadequate. In early development, the practical knowledge was obtained by bitter experience, and results were expressed empirically and reflected the individual peculiarities of the processes rather than the inherent similarities. Today, with a greater fund of information, the similarities among separation processes should be stressed so that useful information learned on one process can be used to assist in designing and operating another process. This will not only allow the more effective use and application of both general and specific knowledge to all operations but the real differences between the various separation processes could be given special attention for their better understanding (2).

Many times in practice there is a choice among methods when separations are to be made. These include mechanical, physical, and chemical. Solvent extraction can be divided into two broad categories according to the origins of the differential solubility. In some cases, it arises from purely physical differences between the solutes, such as polarity, and the influence of these on the concentration dependence of chemical potential. In others, the differential solubility can be traced to a definite chemical reaction between one or more of the solutes and one of the solvents (6).

The maximum separation that can be achieved between two solutes in a single equilibrium step of the two phases is governed by the separation factor, a, and the relative amounts of the two phases used, the phase ratio. Combination of overall mass and component balances with the distribution coefficients allows the compositions of the phases at equilibrium to be computed. If the separation achieved is inadequate, it can be increased by either changing the phase ratio or, more usually, by addition of further contacting stages.

It is important to distinguish two classes of the solvent extraction system: (1) those in which the two phases are completely immiscible or in which the relative miscibility of the two phases is constant and independent of the solute concentration and (2) those in which the relative miscibility of the two phases vary with the solute concentrations. Systems in which the differential solubility derives from complex formation between solute and solvent normally belong to the former group, whereas a variation of solvent miscibility with solute concentration is a characteristic of systems depending only on physical differences for the differential solubility.

The solvent extraction contactor may be considered to be divided into two parts, the extraction section and the scrubbing section (6). Aqueous solutions (original solutions) are usually introduced somewhere near the center of the multistage contactor. The second solution (usually called "the solvent," since it is the one with a preferential affinity for the key component) is introduced at one end of the extraction section through which it flows countercurrent to the feed. The extraction section is

so-called since it is here that the required solute is extracted. The solute plus the solvent is called the extract. The residual stream leaving the contactor is depleted in this solute and is known as the raffinate. The number of equilibrium stages required in the extraction section depends on the phase flow ratio and the distribution coefficient of the extracted solute. However specific a solvent may be for a particular solute, it will inevitably extract a certain amount of the other solutes that are present, since distribution coefficients are rarely zero.

The purpose of the scrubbing section is to provide a means to wash the extract (leaving the extraction section) with the original solvent in which undesired solutes will be preferentially soluble. The number of equilibrium stages required in the scrubbing section is therefore a function of the distribution coefficients of the components other than the material desired to be extracted in conjunction with the phase flow ratio. It does not depend on the distribution of the desired solute. A complete design therefore demands a knowledge of the distribution data for each constituent of a mixture over the full range of concentrations to be anticipated. Needless to say, this is rarely available and a compromise usually has to be reached by considering the key components in the mixture. The key components are, in general, the two constituents between which the separation is to be made. When two phases that are not in equilibrium are brought together, the rate of transfer of solute between them depends on the extent to which the concentrations of the solute in the two phases differ from equilibrium values as fixed by the distribution coefficient. Actually, the above information is related to the absorption or stripping-factor method originally developed for absorber and stripper calculations and applied to multistage extraction (11). Now, like all other separations problems, extraction has been programed for computer application in a convenient analytical manner. The method involved is an adaptation of the Theiele-Gedes method for multicomponent distillation.

Having achieved the extraction, the desired solute is dissolved in the solvent, and the final requirement is the separation of the two. This is a very important step as it will most often dominate the economics of the overall process. The method adapted for solvent recovery depends on the system involved, but two broad categories can again be distinguished according to whether the original extraction involved interaction between the solvent and solutes or depended only on physical effects. In the latter case, solvent recovery is by physical means, of which distillation is by far the most common. If the extraction has involved chemical interaction, then solvent recovery demands reversal of this reaction. This is usually achieved by some form of chemical conditioning. Thus, it is seen that only a minor part of the total equipment in a solvent extraction plant is devoted to the extraction operation. An elaborate equipment installation is required to "distill" the solvent from the extract and raffinate solutions to separate the solvent from the finished product and, finally, to recover the solvent and to purify it as well as to purify the solute, when necessary.

SECTION VI

SOLVENT EXTRACTION PROCESS APPLICATION

Despite the apparent disadvantages of solvent recovery, it is obvious that liquid extraction provides a less expensive overall process for applications where other methods of separation are "border line or fail altogether." The separation of the components of a solution by extraction may be accomplished in a number of ways, depending on the nature of the solvent system and the physical arrangement of the apparatus used. Some typical areas (12) where usefulness has been demonstrated are as follows:

A. Separation of close boiling liquids.

B. Separation of liquids of poor relative volatility.

C. As a substitute for vacuum distillation.

D. As a substitute for evaporation.

E. As a substitute for fractional crystallization.

F. Separation of heat sensitive materials.

G. Separation of mixtures that form azeotropes.

H. Separation according to chemical type where boiling points overlap.

I. As a substitute for more expensive chemical methods, e.g., the separation of uranium from vanadium in ore-leach liquors.

After a review of the above areas of solvent extraction application, attention may be directed to the considerations concerning solvent selection. In choosing a solvent for an extraction process, several principles may be used as a guide. Some of these are frequently conflicting, and no single solvent is likely to possess every desirable characteristic. At any rate, the following factors should be considered to insure the best solvent performance. These factors are listed as to relative importance to aid in compromise.

1. Selectivity: Selectivity will be the first property studied in relation to the process. It refers to the ability of the solvent to extract one component (class) of a solution in preference to another. The ideal solvent, from this standpoint, would dissolve all of one component and none of the accompanying components.

2. Distribution Coefficient: The distribution coefficient is the ratio of concentrations of a solute in equilibrium phases and is a direct measure of selectivity; the ideal solvent would produce a distribution

coefficient which would numerically approach infinity. The selectivity and distribution coefficient may be altered and improved in some instances by altering the pH of the solution or by buffer addition.

3. Capacity: Ordinarily, a solvent should have the capacity to dissolve relatively large quantities of the desired solute. The distribution coefficient should be large, but so should the capacity, otherwise the solvent would be uneconomical to use.

4. Solvent Solubility: The desired solvent should have a high degree of insolubility in relation to innocuous solutes. This produces a high selectivity ratio.

5. Recoverability: The solvent should be removed (recovered) from the products in all extraction processes. This is important from the standpoint of product contamination as well as solvent reuse. The entire problem of solvent recovery is of such importance to the economic success of the extraction process that it must be considered separately.

6. Density: The difference in densitites of the the contacting phases throughout the operating range should be as great as possible. This will not only promote minimum disengaging rates between the immiscible layers but will also minimize equipment sizes.

7. Interfacial Tension: Little is known about the real effects of interfacial tension as related to solvent extraction. In general, interfacial tension between two immiscible liquid phases should be as high as possible to promote liquid disengagement. Low interfacial tension will promote the formation of stable emulsions. Data from the literature are of no practical help in evaluating an extraction system since only data for pure substances may be obtained. From a practical view, a shake-out test of the liquids to be contacted will show much toward settling characteristics.

8. Chemical Reactivity and Stability: The solvent should ordinarily be stable in contact with the feed solution. Chemical reaction is undesirable since product yield is reduced, solvent recovery is made more difficult, and solvent loss may be high. On the other hand, some extraction processes employ chemical reaction as the only possible solution for separation. However, the reaction must be readily reversed so as to minimize the cost of solvent recovery. A plus on the chemical reaction side usually results through an increase in the distribution coefficient. A minus may possibly result from the formation of corrosive products.

9. Corrosiveness: Ideally, the solvent should contribute no more severe corrosion difficulties than those ordinarily associated with the feed stream.

10. Viscosity: Low viscosity solvents promote the following beneficial factors--low power requirements, rapid extraction, quick settling, and high heat and mass transfer rates.

11. Vapor Pressure: Although low vapor pressure is desirable from the standpoint of the extraction operation itself, as well as from the handling and storage of the feed and product streams; the exception to these benefits should be made to promote the ease of solvent recovery. Vapor pressures should be such as to result in big differences in relative volatility between the liquid phases, since relative volatility is a direct measure of the ease of separation of components in a mixture by distillation (separation). Low freezing point, flammability, toxicity, and cost are additional solvent attributes to be considered in the process. In order to have a favorable separation, the following primary properties (as listed above) must be properly assessed: selectivity, interfacial tension, density, and chemical reactivity. The remaining factors (secondary) should be considered from a technical viewpoint since all will contribute to facility of design.

SECTION VII

SOLVENT EXTRACTION EQUIPMENT

Equipment used in liquid-liquid extraction is quite varied, but fortunately it can be classified according to construction and/or operational characteristics into two classifications--stagewise contactors and differential contactors (5).

Stagewise contacting represents a method of performing extraction and many types of equipment fall into this category. This type of contacting is characterized by one or more stages of mixing followed by settling, and each stage approaches one theoretical (ideal) stage. Differential contact is a very general term and for all practical purposes includes all other types of extractors. The distinguishing feature of differential contact is its incomplete separation of the two phases following mixing. Some of the dispersed phase will be carried along by movement of the continuous phase (back mixing). The net effect is a loss in efficiency.

The list below is a sampling of commonly used types; a more extensive list is found in References 5, 21, and 22. Classification and diagrams of selected equipment follow:

1. Stagewise Contactors:

    1.1 Mixer-Settlers (horizontal or vertical)
    1.2 Nonmechanical (no agitation) Plate Columns

        1.2.1 Perforated Plate Column
        1.2.2 Vertical Plate Column

2. Differential Contact Extractors:

    2.1 Nonmechanical Gravity Separated Columns

        2.1.1 Spray Column
        2.1.2 Baffle Plate Column
        2.1.3 Packed Column

    2.2 Mechanical Gravity-Separated Columns

        2.2.1 Rotary Disc Contactor
        2.2.2 Pulsed Column

    2.3 Mechanical Centrifugally-Separated Contactors

        2.3.1 Podbielniak Extractor
        2.3.2 Luwesta Extractor.

Selection of a particular extractor for a separation is still based largely upon experience. In general, it is necessary to establish the desired and/or possible solute recovery (the chemical and physical properties of the system being known) for specified flow rates. The cost of installation, maintenance, and operation must be estimated for a given extractor that most nearly meets all requirements.

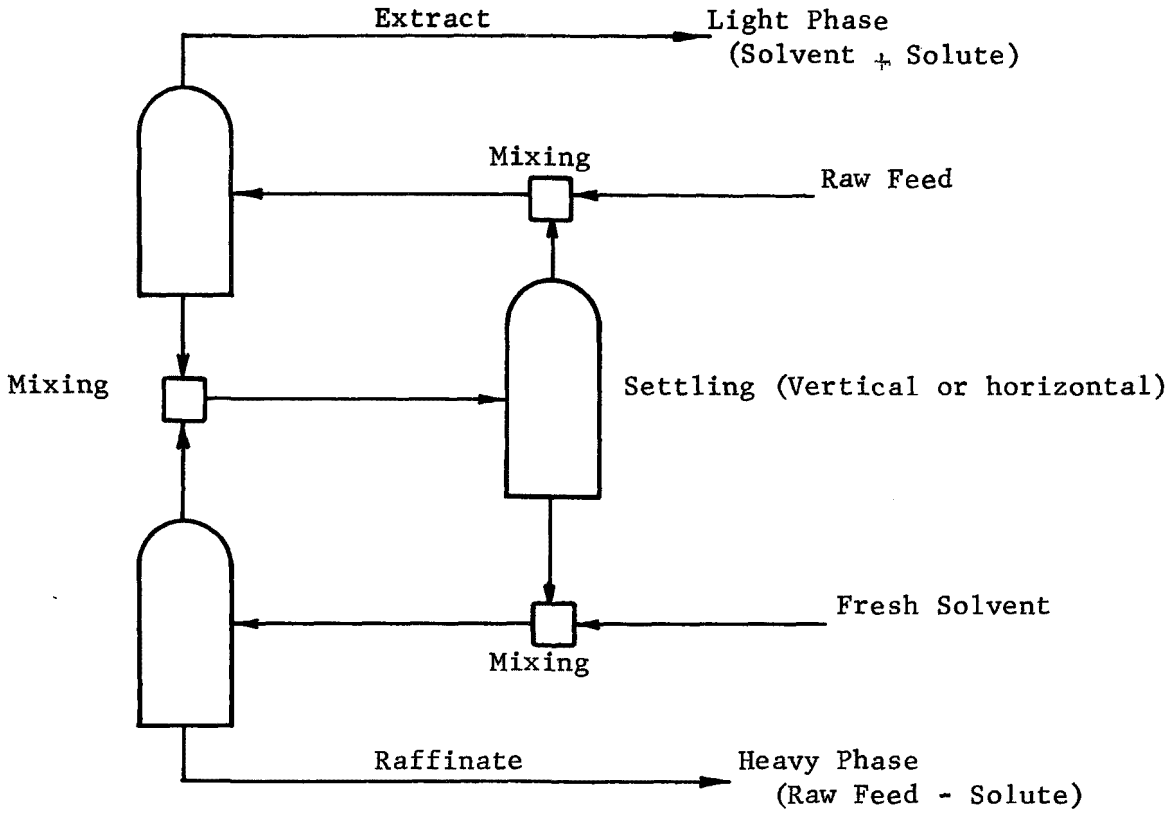

Figure 1.

MIXER-SETTLERS

The mixer-settler is one of the oldest examples of extraction equipment. The settlers may be arranged in cascade to take advantage of gravity flow of the heavy phase. Mixing may be obtained by flow mixers, nozzles, orifices, injectors, etc. Most extractors are some variation of the mixer-settler.

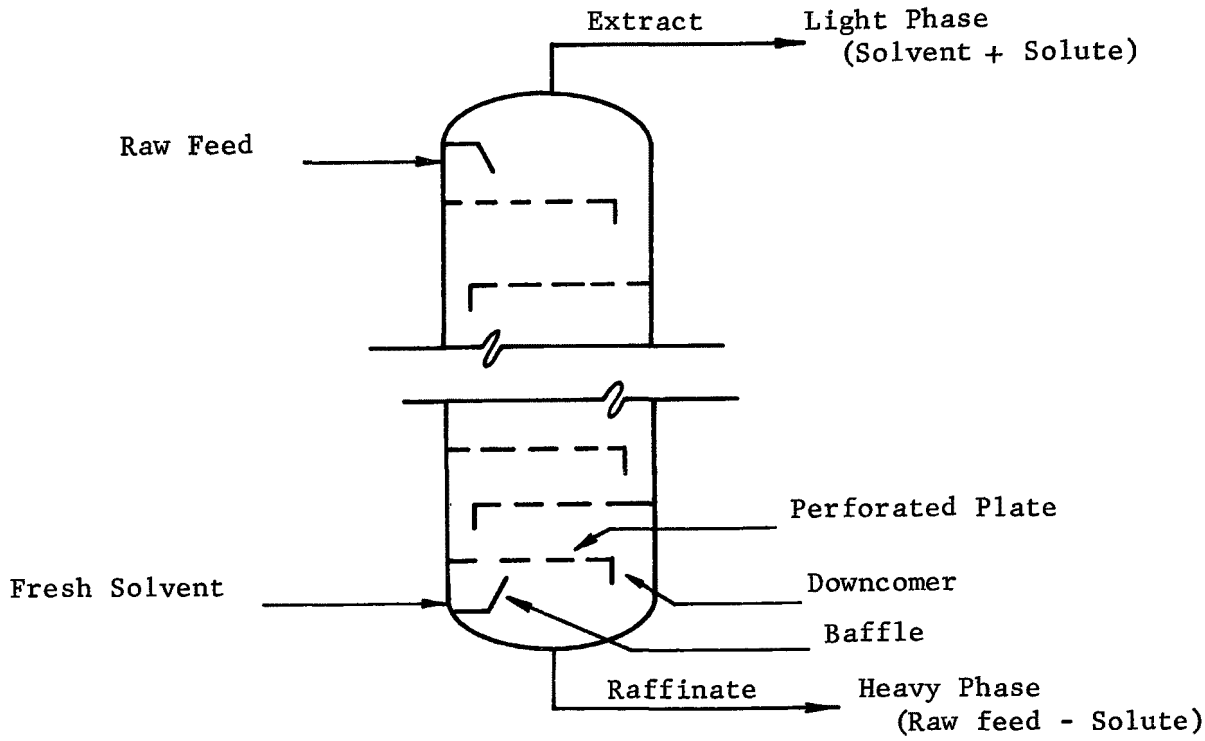

Figure 2.

SIEVE OR PERFORATED PLATE COLUMN

The sieve or perforated trayed column is in reality a series of spray columns. The above example shows layout so that the heavy phase (continuous) will flow downward through downcomers and across each tray while the light (dispersed) phase will flow upward through perforations in each tray. Extraction is promoted by repeated dispersion of one liquid phase through the other. There is repeated dispersion through, and settling between trays. It will be obvious that downcomer orientation determines which phase is dispersed, e.g., by inverting the downcomers the heavy liquid will be the dispersed phase in Figure 2 above.

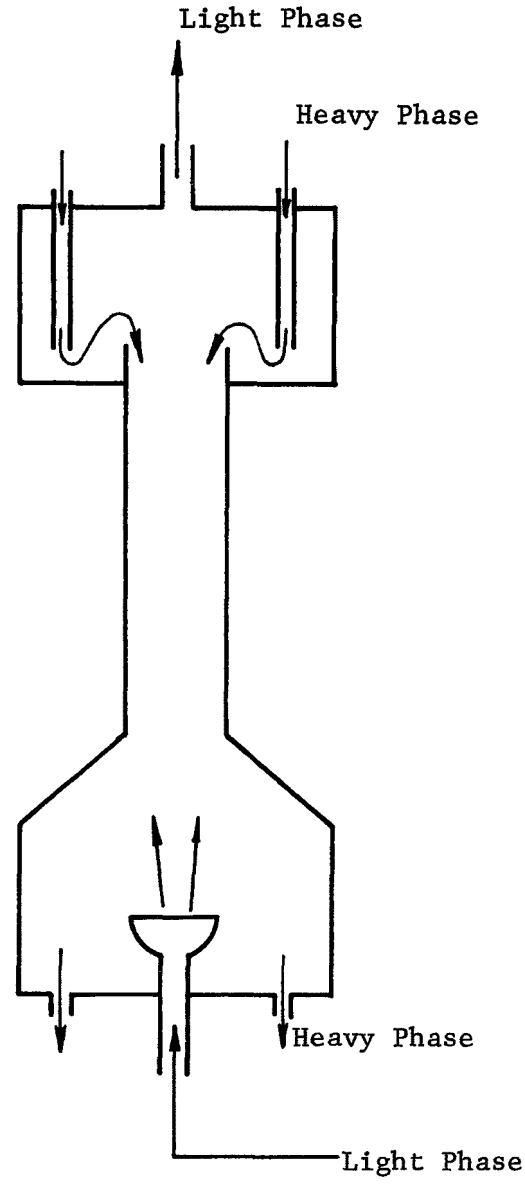

Figure 3.

SPRAY TOWERS (COLUMNS)

Spray towers are the most simple of all extraction equipment but are generally the least efficient due to axial channeling. An improved version of the spray tower is that of Elgin (13), U.S. Patent 2,364,892 (1944), shown in Figure 3.

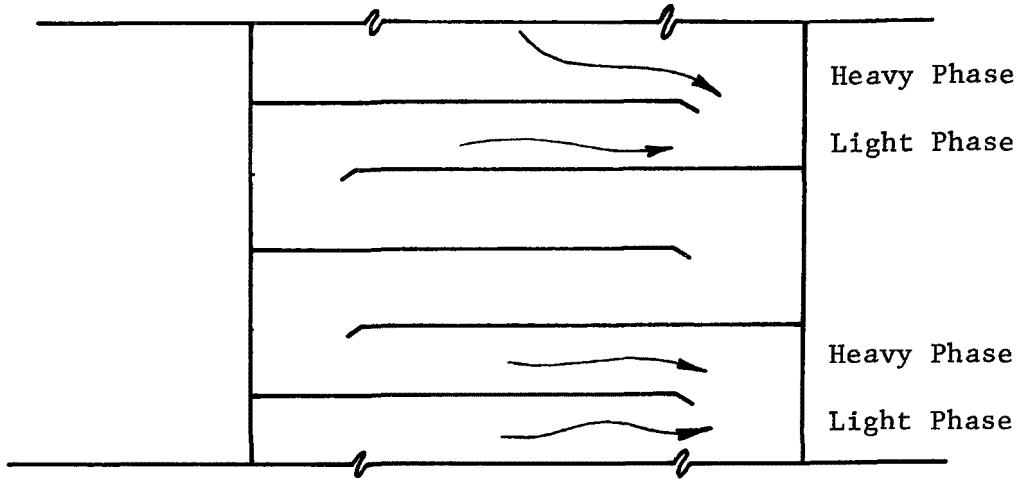

Section of Baffle Plate Column

Figure 4.

BAFFLE PLATE COLUMN

The baffle plate column is actually a combination of the old "side to side pan" column, used in the early refining era, and the spray column. Another configuration is the old "disc and donut" tray arrangement composed of alternate flat rings and discs. The principle advantage of the baffle tower over the spray tower is the increase in residence (contact) time and a decrease in channeling.

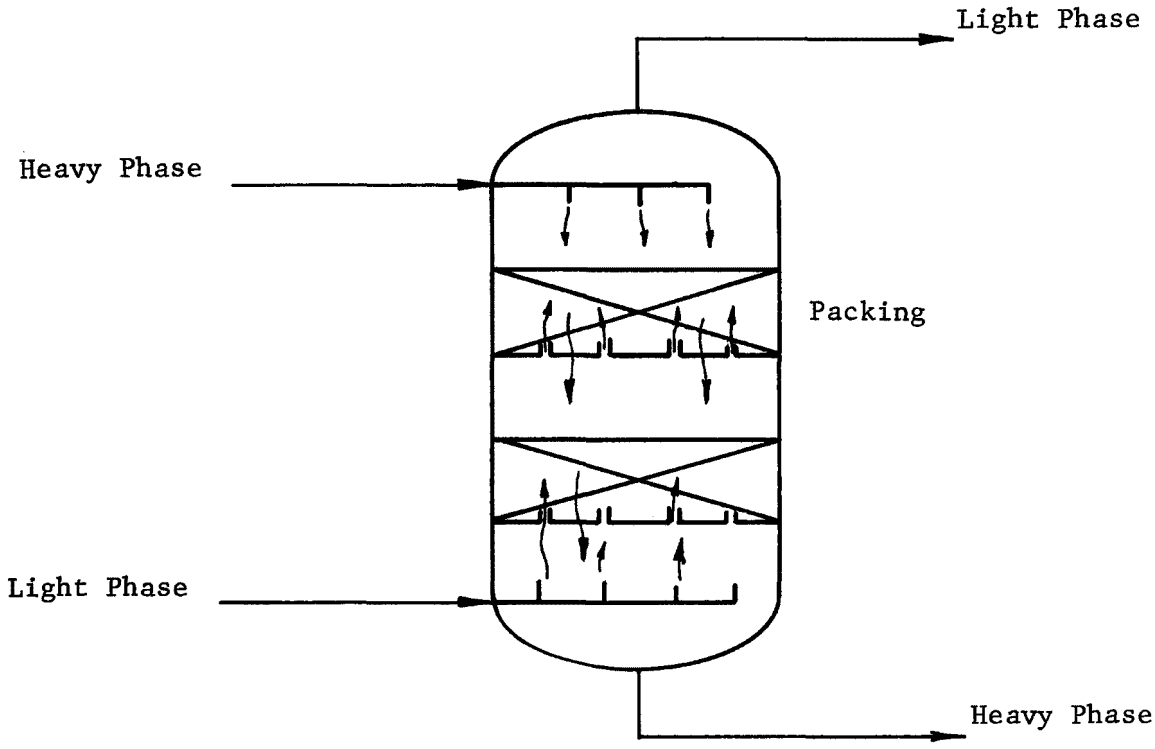

Figure 5.

PACKED COLUMN

The packed column is another improved version of the old spray tower and properly designed promotes high mass transfer rates. The packing may consist of ceramics, metal, plastics, etc., of various shapes and sizes.

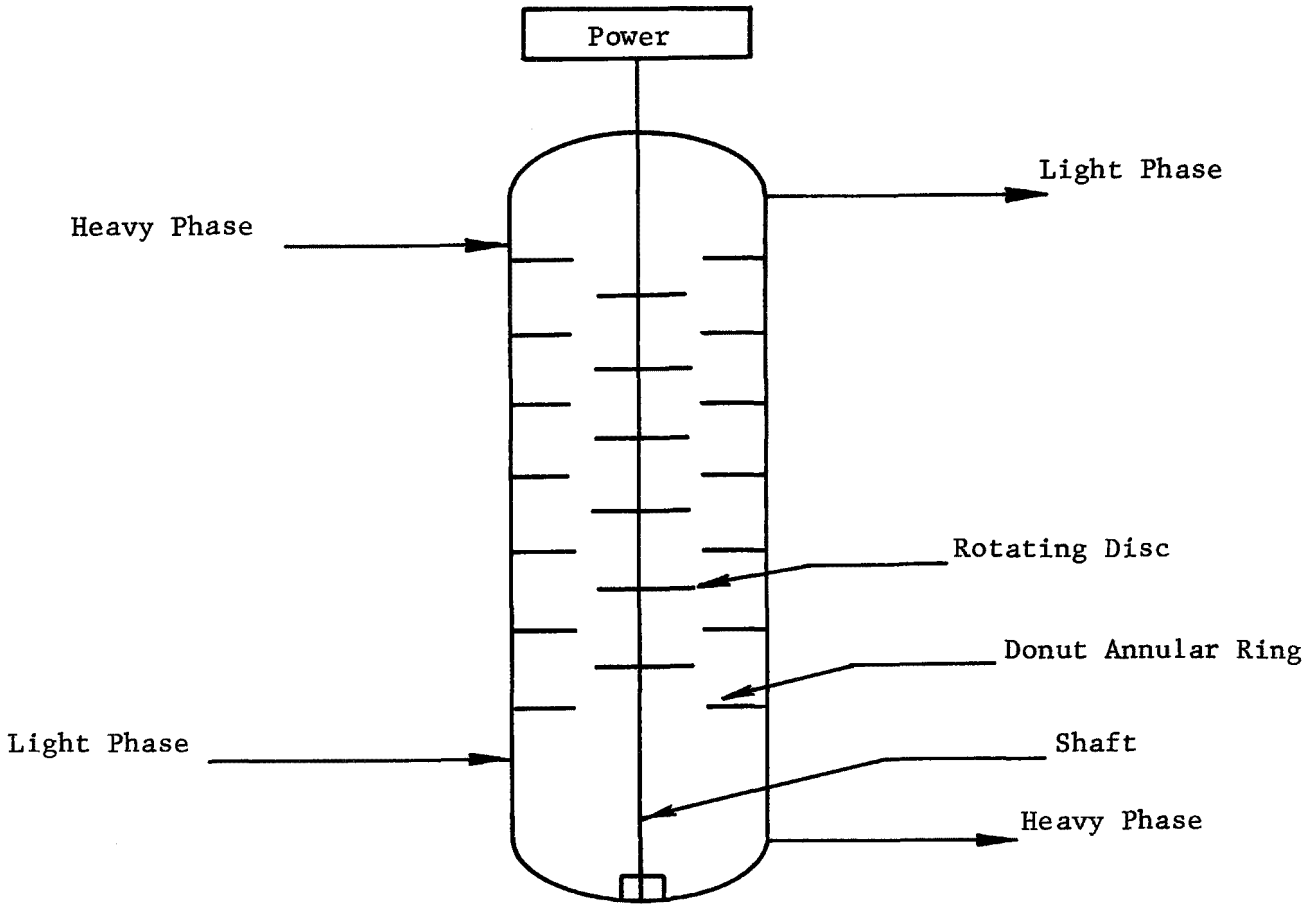

Figure 6.

ROTATING DISC CONTACTOR

The rotating disc contactor is a disc and donut column. The discs are attached to a rotating shaft, usually centrally located in the column. Each disc is separated from other discs by annular flat rings fastened to the shell.

SECTION VIII

SOLVENT EXTRACTION AS APPLIED TO WASTE WATER RENOVATION

In the development of a new extraction process, such as that applicable to waste water renovation, it will not be possible to rely on equilibrium data obtained from the literature based on fairly pure materials. Often the chemicals are technical grade solvents contaminated with minor constituents which may be quite unpredictable as to their effect. Too, the waste streams to be studied will not usually be simple solutions of two or three components or solutes but will contain varying amounts of substances whose effect in an extraction process cannot be predicted. Indeed, there will generally be traces of unsuspected chemicals present which may not be found until their separation or concentration by the process. The waste contaminates to be separated will, in most instances, be varied and complex. Attempts to obtain detailed distribution data, though desirable, will be costly. Such will be especially true when the distribution of constituents are synergistic and interdependent. Calculation procedures will be very difficult if not impossible. Distribution curves will be unpredictable in the dilute concentration ranges and cannot be extrapolated. Such are some of the problems peculiar to investigation of the solvent extraction of contaminates from industrial waste effluents ranging in the parts per million concentration. Little work has been done in the separation of organics from waste water by solvent extraction, except that attendant with other separating work (14). Some extraction work patterned after desalination techniques has been done on sewage secondary effluents to separate a "purified" water from brine containing organic and inorganic compounds (15).

One pretreatment installation is known to exist at a plant manufacturing complex halogenated phenolic compounds. Counter-current flow solvent extraction was utilized to extract unreacted feedstocks from the unit process waste water. The extraction solvent utilized was the same compound as the carrier solvent for feedstock thereby allowing direct recycle to the process input. Basic purpose of the installation was to reduce the load of halogenated phenolics to a level acceptable by a municipal secondary waste water treatment plant (16).

Lewis and Martin (17) report on an electrostatic extraction process to remove phenols from cat cracker distillates. This process is said to reduce phenol content in the distillate water by 90 percent or to a level of 30 ppm (plus) in the waste stream. Beychok (18) reports on improvement of the distribution coefficient in this type of process by the addition of pyridine and quinoline. Weinberger and Stephan (19) report in "Technology of Advanced Waste Treatment," as of May 1967 that no extraction processes were under study by FWPCA. Further, these authors report that biochemical oxygen demand (BOD) and coliform bacteria are no longer the only measures of wastes discharged. Other types of materials are of growing concern--refractory organics, radionuclides, nutrients, viruses, inorganic salts, and heat. Pollutional effects of these materials

may include accelerated eutrophication (over-fertilization); interference with water treatment or industrial use of the water; tainting of fish flesh; fish kills, or other damage to stream biota; taste, odor, color, or foam in water supplies; and potentially toxic or carcinogenic damage to man.

Only in the last 10 years has any concerted effort been directed to the exploring of treatment approaches other than those in the municipal waste treatment field. Very few new concepts in waste treatment have been developed and placed in operation. The fact that "appropriate" treatment would restore a waste stream to any desired level of quality makes waste treatment the most important and potentially the most fruitful area for "breakthrough" in an intensified research. Physical separation principals, in particular solvent extraction, deserve much increased attention as supplements to biological treatment methods, etc. Solvent or liquid extraction could be more readily adapted to the new concept of treatment on a demand basis in order to achieve a desired level of pollution abatement at a variable cost. This concept should be fully explored, especially since extraction makes available a physicochemical process with a possible variable degree flexibility. This approach would harmonize with the objective in advanced waste treatment research to develop the minimum cost system of physical, chemical, and biological treatment to achieve the degree of pollution control that may be required for any specific situation.

Advanced waste treatment research will follow the normal process development sequence from desk top and laboratory exploratory studies through feasibility determinations at bench level to engineering studies in field scale pilot plants for larger scale process evaluation. The objective of the field scale pilot plant is to establish the performance and cost of an advanced waste treatment system on a scale of operation sufficiently large that potential municipal and industrial users of the system may select it with assurance. This type of assurance of performance and cost of a new water pollution control technology will greatly expedite its introduction into practice and is, in fact, necessary before application of a new technology can be expected.

It will be desirable to carry out multi-stage extractions in the laboratory to provide information suggested above. For complex mixtures, conditions should approximate as closely as possible those anticipated for industrial use with respect to operating and design parameters. Counter-current multi-stage extraction seems to be suggested here. True counter-current processes are necessarily continuous; consequently, either of two procedures could be followed: (1) batch simulation of the counter-current multi-stage process or (2) continuous extraction in a miniature bench-scale extractor of known stages. Both procedures may be used, but miniature extractors are frequently inflexible due to limitation in number of stages and difficult to feed continuously in a steady state fashion on a small scale. Batch simulation, therefore, is most often used with subsequent miniature pilot scale to obviate the use of a continuous bench extractor.

SECTION IX

LABORATORY BENCH SCALE APPROACH

The selection of the best solvent for a given separation is the first problem to be met in the design of an extraction process. Several criteria are to be considered in this selection such as availability, enhancement of relative volatility, etc. The technique of gas-liquid chromatography for screening solvents has shown some promise in this field (20). Bench simulation is usually carried out with ordinary laboratory separatory funnels according to Jantzen (21), and involves the simple shake-settle method of approach. This procedure assumes that each extraction, or "shake-out," is an equilibrium extraction or an approach to ideal-stage extraction. For this purpose, equilibrium between the phases may be reached with hand shaking. Generally, 50 simple inversions during a 1.5-minute period of a separatory funnel containing an extraction system of ordinary viscosity results in equilibrium between the phases. More violent shaking may lead to false equilibrium. The rate of attainment of equilibrium should be checked to account for possible chemical reaction between solvent and solute.

To insure that transfer of liquids repeatedly from funnel to funnel is representative; sufficiently large batches must be used. Small batches produce errors due to the inevitable losses incurred through improper drainage from the funnel. Larger batches are necessary when liquids of high viscosity are used. Settling must be complete and, after phase withdrawal, additional settling should be allowed with subsequent drainage of additional accumulation.

Repeated introduction of feed mixture and solvent will produce the same effect as a steady-state continuous process, but the approach to this condition is asymptotic. The liquid batches should be in the same ratio as the rates of flow to be simulated in the continuous cascade.

There are published procedures (21) for laboratory simulation of various modifications of the solvent extraction process; i.e., counter-current extraction, counter-current extraction with reflux, fractional extraction, and miniature continuous extractors.

SECTION X

PILOT PLANT APPROACH

Pilot plant extractions are done on a larger scale than those thus far described. They have as objectives:

1. To demonstrate feasibility.

2. To establish operating and design characteristics

3. To determine solvent characteristics

4. To check feed stock and product characteristics

5. To determine long-term accumulation of undesirable constituents in the solvent

6. To provide product for evaluation.

In general, small units will give desired data for product evaluation and economics of installation and operation. Some extractor types are more reliable than others, therefore, the extractor size should be correlated with stream hydraulic characteristics. Scale-up procedures are more reliable for mixer-settlers and mechanically agitated tower extractors; therefore, these types of equipment can be expected to be more efficient when scaled up to plant equipment.

Materials of construction should be evaluated early in the research study like those for large scale by testing in a simulated plant atmosphere, particularly in the case of aqueous systems. In many cases, corrosion will be important, but operating characteristics such as the wetting or dispersion of the liquid must also be studied.

Start-up of the extractor must be according to a set procedure to minimize problems such as flooding and for assurance that steady-state has been attained before samples are taken for analysis. The time for steady-state is variable depending upon the type of extractors used. Tower extractors require greater time due to the appreciable volumes of liquids maintained in the upper and lower sections. The time to reach steady-state may be calculated through knowledge of the system, the solvent involved, solvent/feed ratio, and the distribution coefficient for the solute.

Sampling is of prime importance and should be done during the start-up period to determine the approach to steady-state before data are accepted for computing performance. During the course of the study, care must be taken to sample at points along the extractor length to obtain data to determine the column characteristics apart from the limiting conditions at the column ends.

Demonstration of an extraction process for renovation of a waste water should be sufficient in time to establish a basis for economic evaluation. During such time, attention should be given to solvent losses, deterioration and breakdown, solubility characteristics, etc. Since solvent losses from a small scale unit generally constitute a significant fraction of the throughput, accurate records are essential to the economics of the extraction process.

High concentrations of solutes increase the chances for successful efficient wastewater renovation processes. To exemplify systems which offer promise for treatment by solvent extraction, the following list (Table I) was taken from The Cost of Clean Water and Its Economic Impact, Volume IV (22). The report was compiled by Cyrus W. Rice and Company and entitled "Projected Wastewater Treatment Costs in the Organic Chemicals Industry." No attempt was made to include all wastes reported therein; only those with exceptionally strong waste loads or unusual composition were considered. The table shows processes by product, the annual production volume per unit of product, and strength in pounds per ton or mg/l of COD.

The list is suggested as a guide to current possibilities and should not be construed as that expected from the continual growth of the petroleum-petrochemical industry. Data in the table include several processes which produce organic waste loads that exceed 0.1 percent. Of all the examples cited, none would contain a single solute as a pollutant. Calculations, therefore, cannot be made to reflect the recovery and value of solutes in these systems, but they exemplify likely candidates for solvent extraction. Each process would have to be considered separately and the economics judged from the results obtained. In most instances, the value of the clean water product would exceed that of any chemical product recovered. The reduction in quantity of wastes discharged would be the deciding factor as to the reuse of the treated water.

TABLE 1

PROCESS WASTES (27)

PRODUCT	U.S. CAPACITY POUNDS/YEAR	WASTE STREAM VOLUME Gal/Ton	WASTE ORGANIC CONTENT mg/l
Acetaldehyde	1.8×10^9	1200	10,000
Acetic Acid and Anhydride	2.0×10^9	1000	30,000
Acrylates	0.5×10^9	1500	10-20,000
Benzene	7.7×10^9	--	50-200
Butadiene	3.2×10^9	100	250-375
Cyclohexane	3.3×10^9	200-2000	50-200
Vinyl Chloride and Polyvinylchloride	5.0×10^9	2000	1200-1500
Ethylene Oxide	4.5×10^9	1650	1400
Phenol	2.0×10^9	1500	13,200
Chlorinated Hydrocarbons	1.8×10^9	--	--
Formaldehyde	5.0×10^9	100	1-5000
Polystyrene	1.9×10^9	600	1400

SECTION XI

RESEARCH PROGRAM

The direction of time and funds toward utilization of solvent extraction as an industrial process for waste water renovation has been limited. It is expected that the effort must increase substantially. Many processes produce wastes suitable for solvent extraction waste water treatment. The history of solvent extraction has shown the logic of directing extraction research toward those systems which defy "conventional" treatment and/or those which are likely to produce salable products. Accordingly, future research efforts must be directed toward industrial process wastes containing substances which are refractory to biological treatment, such as halogenated hydrocarbons. Such compounds are not only refractory but are known causes of taste and odors in municipal water supplies in very small concentrations.

SECTION XII

GRANT PROGRAM

EPA's interest in utilization of solvent extraction has resulted in three research proposals to apply the technology to various industrial waste systems.

1. Project EEQ 12020 - Treatment of Waste Waters Resulting from the Production of Polyhydric Organic Compounds - The waste system considered contained 8-12 percent sodium chloride, 0.2 percent glycols in water. Diisopropylamine and methyl diethyl amine were used for the extraction of the glycols. Results showed a high selectivity for the glycol in the solvent phase at the salt saturation stage of the extraction. The selectivity was much lower at higher temperatures simulating the top of the extractor but still favored the solvent phase.

Stagewise calculations showed that five theoretical stages were required. At solvent-to-feed ratio of 5.7, the saturated raffinate contained 0.08 percent glycol. Product water contained 0.25 percent glycol and 2.5 percent salt. Although better separation could be obtained with reflux, the high solvent-to-feed ratio makes the process uneconomical compared to other types of treatment. Project time and funding constraints did not permit further work concerning liquid extraction.

2. Project GLN 12020 - Extraction of Chemical Pollutants from Aqueous Industrial Streams with Volatile Solvents - This is a recently funded grant (September 1970) to develop a solvent extraction system which uses liquified gases (carbon dioxide, propane, etc.) as the solvent. The system will involve contacting waste water with liquified gaseous solvent, separation of the raffinate, and flashing the gases followed by recovery of the pollutant solutes. After obtaining sufficient physicochemical data on various organic solutes, a bench-scale continuous-flow demonstration unit will be constructed for evaluation of petroleum refining and petrochemical plant waste streams.

Applications to be considered are:

A. Phenolic waste waters

B. Aromatics nitration wastes

C. Aromatics extraction process waste water

D. Acetic acid manufacture waste water

E. Ethanolamine recovery system waste water

F. Synthetic resin manufacture waste water.

3. Project R800947 - Extraction or Destruction of Chemical Pollutants from Aqueous Industrial Waste Streams - This project was funded as a federal grant to investigate, recommend methods and procedures, and make preliminary designs for advanced waste treatment processes for the reduction of contaminates in petrochemical plant waste effluent streams, equivalent to or exceeding second stage biological treatment processes. The waste products to be reduced will include halogenated hydrocarbons and other refractory compounds which effect potable water supplies, aquatic and marine life with respect to taste, tainting, and odor. The primary objectives of this proposed research project are: (1) to accomplish the necessary bench work to quantitatively evaluate how selected petrochemical waste streams can be treated economically by solvent extraction; (2) to obtain distribution, performance, and other data necessary for preliminary design of in-plant continuous flow pilot plants for both solvent extraction and solvent recovery systems; (3) to make preliminary designs of continuous flow in-plant pilot plants for the above processes; (4) to determine and recommend the most suitable types of equipment for the above processes and prepare cost estimates and economics for the full-scale industrial process units. The basic program will encompass necessary analytical and laboratory studies to determine solvents and performance data applicable for the removal of waste contaminates from selected waste streams to be made available by five cooperating petrochemical industrial complexes.

The specific aim of the project will be to achieve a practical and workable foundation from which techniques will be made available for the reduction of refractory chemicals in industrial waste effluent streams. Emphasis will be placed on reducing chemicals affecting potable water supplies, aquatic and marine life with respect to tainting and odor.

Since halogenated hydrocarbons are refractory to biological treatment, control by solvent extraction may be feasible as a single process or in combination with other methods of treatment. The proposal is premised for joint participation between Federal, State, and industry. Various industries which produce halogenated hydrocarbons have made commitments to participate in the project and to apply solvent extraction technology, along with other waste treatment processes, to determine the most feasible method of treatment to reduce the concentrations of the offending chemicals.

The objectives of the project are to demonstrate waste treatment procedures for the reduction of certain petrochemical plant waste products including refractory halogenated hydrocarbons which affect potable water supplies and aquatic and marine life with respect to taste, odor, and tainting.

Beyond these immediate objectives, however, is the concern over the possible health hazards of these chemicals to the people consuming the processed water.

SECTION XIII

REFERENCES

1. McKinney, R.E., "Biological Oxidation of Organic Matter," Advances in Biological Treatment, (Edited by Eckenfelder, W. W. Jr.; McCabe, J.) Pergamon Press, New York, 1963.

2. Hachmuth, Karl H., "Industrial Viewpoints on Separation Processes," Chemical Engineering Progress, 48, No. 10, 11, 12, 1952.

3. Elgin, J. C.; Wynkoop, R.; and Lane, J. A., "Solvent Extraction and Dialysis," Chemical Engineers Handbook, McGraw-Hill, 1963.

4. Wurm, H. J., "The Treatment of Phenolic Wastes," 23rd Industrial Waste Conference 1968, Part II, Purdue University.

5. Oberg, A. G., and Jones, S. C., "Liquid-Liquid Extraction," Chemical Engineering, 1963.

6. Hanson, C., "Solvent Extraction," Chemical Engineering, 1963.

7. Nelson, W. L., "Solvent Treating and Extraction Processes," Petroleum Refinery Engineering, Third Edition, McGraw-Hill, 1949.

8. Lacy, W. J., "The Industrial Water Pollution Control R&D Program," National Association of Corrosion Engineers, 26th National Conference, Philadelphia, Pennsylvania, March 2-6, 1970.

9. Rey, G., "Plan for the Future--Industrial Waste Water Reuse," Draft Report.

10. Cywin, A., "Water Resources in the Year 2070," A.S.C.E. National Water Resources Engineering Meeting, 1970.

11. Friday, J. R., PhD Thesis, Purdue University, Lafayette, Indiana, 1963.

12. Treybal, R. E., "Liquid Extraction, Second Edition," McGraw-Hill, 1963.

13. Elgin, J. C., U. S. Patent 2,364,892 (1944).

14. Zeitoun, M. A., and Davison, R. R., "Clean Water By Extraction," Chemical Engineering Progress, 60, No. 12, 1964.

15. Zeitoun, M. A.; Davison, R. R.; White, F. B.; Hood, D. W., "Solvent Extraction of Sewage Secondary Effluents Heterogeneous Equilibrium of Organics and Inorganics," Division of Water and Waste Chemistry, 147th ACS Meeting, April 5-10, 1964.

16. Wood, M. L., Private Telephone Communication.

17. Lewis, W. L., and Martin, W. L., "Removal Phenols from Waste Water," Hydrocarbon Processing, Gulf Publishing Company, 46, No. 2, 1967.

18. Beychok, M. R., "Refinery and Petrochemical Effluents," Aqueous Wastes frøm Petroleum and Petrochemical Plants, John Wiley & Sons, 1967.

19. Weinberger, L. W., and Stephen, D. G., "Technology of Advanced Waste Treatment," International Conference on Water for Peace, Washington, D. C., May 23-31, 1967.

20. Tassios, D., "GLC Screens Extraction Solvents," Newark College of Engineering, Newark, New Jersey.

21. Jantzen, E., "Das Fractoniente Distillieren Das Fractionierte Verteilen," Dechema Monographien V., 48, Verdaz Chemi, Berlin, 1932.

22. U.S. Federal Water Pollution Control Administration. The Cost of Clean Water and Its Economic Impact. Vol IV, "Projected Wastewater Treatment Costs in the Organic Chemicals Industry," by Cyrus Wm. Rice and Co., 1969.

23. Akell, R. B., "Extraction Equipment Available in the U.S.," Chemical Engineering Progress, 62 No. 9, 1966.

24. Reman, G. H., "Extraction Equipment Outside the U.S.," Chemical Engineering Progress, 62 No. 9, 1966.

SELECTED WATER RESOURCES ABSTRACTS

INPUT TRANSACTION FORM

1. Report No.

2.

3. Accession No.

W

4. Title

SOLVENT EXTRACTION STATUS REPORT

5. Report Date

6.

8. Performing Organization Report No.

7. Author(s)

Mayhue, Luther F.

10. Project No.

12020 EWZ

9. Organization

Environmental Protection Agency
Robert S. Kerr Water Research Center

11. Contract/Grant No.

13. Type of Report and Period Covered

12. Sponsoring Organization

15. Supplementary Notes

Environmental Protection Agency report number EPA-R2-72-073, December 1972

16. Abstract

The history, basic principles, process application, laboratory approach, and grant program concerning solvent (liquid-liquid) extraction was investigated in relation to its application to industrial effluent waste water systems. A search of the literature reveals that little consideration has been given to solvent extraction as a feasible waste treatment method. Various aspects of solvent extraction technology are presented along with a number of industrial wastes which should be considered for treatment. One of the areas of greatest need for research concerning industrial waste water treatment is in the removal of refractory, and taste and odor causing compounds. Application of solvent extraction to waste systems containing low concentrations (0.05%) may be feasible on a "swap out" basis or in conjunction with biological, adsorption, or incineration treatments as a pretreatment step. Application of solvent extraction to waste systems for recovery of salable products to offset cost of treatment should be studied for feasibility. Accomplishments and plans regarding industrial research projects are presented.

17a. Descriptors

Solvent extraction, Separation techniques, Desalination processes, Solubility, Solvents, Waste water treatment, Tertiary treatment, Water reuse, Water allocation, Immiscibility.

17b. Identifiers

Solvent solubility, Solvent selectivity, Liquid extraction contactors.

17c. COWRR Field & Group

18. Availability

19. Security Class. (Report)

20. Security Class. (Page)

21. No. of Pages

22. Price

Send To:

WATER RESOURCES SCIENTIFIC INFORMATION CENTER
U.S. DEPARTMENT OF THE INTERIOR
WASHINGTON, D. C. 20240

Abstractor Luther F. Mayhue

Institution EPA - Robert S. Kerr Water Research Center

WRSIC 102 (REV. JUNE 1971)