BACKGROUND DOCUMENT

RESOURCE CONSERVATION AND RECOVERY ACT

SUBTITLE C - IDENTIFICATION AND LISTING OF HAZARDOUS WASTE

§§261.31 and 261.32 - Listing of Hazardous Wastes

May 2, 1980

U.S. ENVIRONMENTAL PROTECTION AGENCY

OFFICE OF SOLID WASTE

Hazardous Waste Listing Background Document

INTRODUCTION

Subtitle C of the Solid Waste Disposal Act, as amended by the Resource Conservation and Recovery Act of 1976 creates a comprehensive "cradle-to-grave" management control system for the disposal of hazardous wastes designed to protect the public health and the environment from the improper disposal of such waste. Section 3001 of that Subtitle requires EPA to identify the characteristics of and list hazardous wastes. Wastes identified or listed as hazardous will be included in the management control system created by Sections 3002-3006 and 3010. Wastes not identified or listed will be subject to the requirements for non-hazardous waste imposed by the States under Subtitle D.

Hazardous Waste List

The purpose of the hazardous waste list as required by Section 3001 of RCRA is to identify those wastes which mav present a potential hazard to human health or the environment. The waste so identified is considered hazardous (unless it has been excluded from the list under §§260.20 and 260.22) and subject to the Subtitle C regulations. A solid waste, or class of solid wastes is listed if the waste:

(1) exhibits any of the characteristics identified in Subpart C of the final regulations; or

(2) meets the definition of §261.11(a)(1) of the regulations (i.e., may cause or significantly contribute to, an increase in mortality or an increase in serious irreversible, or incapacitating reversible, illness) and thus, presents an acute hazard to humans; or

(3) contains any of the toxic constituents listed in Appendix VIII of Part 261 unless, after considering any of a number of factors, the Administrator concludes that the waste will not meet the criterion of §261.11(a)(2) (i.e., may pose a substantial present or potential hazard to human health or the environment when it is improperly treated, stored, transported, disposed of or otherwise managed) of the regulations (see Criteria for Charazcteristics/ Listing/Delisting background document for a discussion of the various factors).

The Agency considered several approaches for formulating the list. The approaches can be broken down into three main types:

- Hazardous Waste from Non-Specific Sources - these are wastes which are generated from a number of different sources (i.e., electroplating, etc.)
- Hazardous Waste from Specific Sources - these are wastes which would be generated from a very specific

source (i.e., distillation bottoms from the production of acetaldehyde from ethylene, etc.)

- Commercial Chemical Products - these are a list of commercial chemicals or manufacturing chemical intermediates which if discarded either as the commercial chemical or manufacturing chemical intermediate itself; off-specification commercial chemicals or manufacturing chemical intermediates; any container or inner liner removed from a container that has been used to hold these commercial chemical products or manufacturing chemical intermediates unless decontaminated; or any residue or contaminated soil, water or other debris resulting from the clean-up of a spill into or on any land or water, of these commercial chemical products or manufacturing chemical intermediates are hazardous wastes.

(This listing background document will cover the first two categories; the third category of hazard waste is discussed in the background document entitled, "Hazardous Waste from Discarding of Commercial Chemical Products and the Containers and Spill Residues Thereof".)

HAZARDOUS WASTE FROM NON-SPECIFIC AND SPECIFIC SOURCES

Testing of pure substances is the traditional approach

used by regulatory agencies to control toxic/hazardous chemicals* The purpose of RCRA, however, is to control waste materials; these are not normally pure substances (except as in the case noted above).

In order for a regulation to be effective, it should be structured so that it reflects the organization of the regulated community. Since waste process streams are often the units of the solid waste regulated by the Act, these same waste process streams can be used to provide a ready means of identification; such that, for our purposes, it is more useful (for identification purposes) to list "still bottoms from the XYZ process - ignitable". Likewise, there are certain waste classes, such as halogenated solvents which, if classified as wastes, would be unambiguously identified by such a designation.

In this document, the Agency is providing the technical support for the 85 waste streams promulgated (interim final) today. This document also includes the technical support for the eleven new wastes proposed today. This listing (both interim final and proposed) includes 16 waste streams from non-specific sources and 80 wastes from specific sources.

*Pure substance listings work well for many agencies, since their responsibilities lie with some aspect of the pure substance. The Department of Transportation, for example, uses this approach. Benzene is listed by DOT as a flammable liquid. A transporter knows, after consulting the DOT listing, that benzene must be handled according to the DOT flammable liquid regulations.

The background data used to support these listings comes primarily from two sources. The majority of this data or information comes from studies undertaken by the Agency or data available to the Agency (i.e., industry assessment studies conducted by the Office of Solid Waste, effluent guidelines studies conducted by the Office of Water Planning and Standards, health effects and fate and transport data compiled by the Office of Research and Development and Office of Water Planning and Standards, damage assessments and incidents compiled by the Office of Solid Waste, etc.)*. The second source of data came from information collected from State Agencies (i.e., manifest data, etc.).

In addition, this document discusses the comments received on the proposed listings (43 FR 58957-58959 and 44 FR 49402-49404) which are promulgated today, and the changes subsequently made.

*It should be noted that a number of these documents (e.g., pesticide waste background documents) contain confidential information. This data has been removed from the document and will not be made available to the public. This data, however, is part of the Administrative record and is included in the Agency's case to support the listing.

Table of Contents

Background Document — Page

1. Wastes From Usage of Halogenated Hydrocarbon Solvents in Degreasing Operations 2

   - The spent halogenated solvents used in degreasing, tetrachloroethylene, methylene chloride, trichloroethylene, 1,1,1-trichloroethane, carbon tetrachloride, and the chlorinated fluorocarbons; and sludges resulting from the recovery of these solvents in degreasing operations (T)

2. Wastes From Usage of Organic Solvents 30

   - The spent halogenated solvents, tetrachloroethylene, methylene chloride, trichloroethylene, 1,1,1-trichloroethane, chlorobenzene, 1,1,2-trichloro-1,2,2-trifluoroethane, o-dichlorobenzene, trichlorofluoromethane, and the still bottoms from the recovery of these solvents (T)

   - The spent non-halogenated solvents, xylene, acetone, ethyl acetate, ethyl benzene, ethyl ether, n-butyl alcohol, cyclohexanone, and the still bottoms from the recovery of these solvents (I)

   - The spent non-halogenated solvents, cresols and cresylic acid, nitrobenzene, and the still bottoms from the recovery of these solvents (T)

   - The spent non-halogenated solvents, methanol, toluene, methyl ethyl ketone, methyl isobutyl ketone, carbon disulfide, isobutanol, pyridine, and the still bottoms from the recovery of these solvents (I,T)

3. Electroplating and Metal Finishing Operations 82

   - Wastewater treatment sludges from electroplating operations

4. Spent Waste Cyanide Solutions and Sludges 102

   - Spent plating bath solutions from electroplating operations (R,T)

Page

- Plating bath sludges from the bottom of plating baths from electroplating operations (R,T)

- Spent stripping and cleaning bath solutions from electroplating operations (R,T)

- Plating bath and rinse water treatment sludges from electroplating operations (T)*

- Quenching bath sludge from oil baths from metal heat treating operations (R,T)

- Spent solutions from salt bath pot cleaning from metal treating operations (R,T)

- Quenching wastewater treatment sludges from metal heat treating operations (T)

- Flotation tailings from selective flotation from mineral metals recovery operations (T)

- Cyanidation wastewater treatment tailing pond sediment from mineral metals recovery operations (T)

- Spent cyanide bath solutions from mineral metals recovery operations (R,T)

- Dewatered air pollution control scrubber sludges from coke ovens and blast furnaces (T)

5. Wood Preserving 141

- Bottom sediment sludge from treatment of wastewaters from wood preserving processes that use creosote or pentachlorophenol (T)

- Wastewater from wood preserving processes that use creosote or pentachlorophenol (proposed) (T)

6. Chromium Pigments and Iron Blues 171

- Wastewater treatment sludge from the production of chrome yellow and orange pigments (T)

*Same as "Wastewater treatment sludges from electroplating operations.

Page

- Wastewater treatment sludge from the production of molybdate orange pigments (T)

- Wastewater treatment sludge from the production of zinc yellow pigments (T)

- Wastewater treatment sludge from the production of chrome green pigments (T)

- Wastewater treatment sludge from the production of chrome oxide green pigments (anhydrous and hydrated) (T)

- Wastewater treatment sludge from the production of iron blue pigments (T)

- Oven residue from the production of chrome oxide green pigments (T)

7. Acetaldehyde Production 204

- Distillation bottoms from the production of acetaldehyde from ethylene (T)

- Distillation side-cuts from the production of acetaldehyde from ethylene (T)

8. Acrylonitrile Production 224

- Bottom stream from the wastewater stripper in the productionof acrylonitrile (R,T)

- Still bottoms from final purification of acrylonitrile in the production of acrylonitrile (T)

- Bottom stream from the acetonitrile column in the production of acrylonitrile (R,T)

- Bottoms from the acetonitrile purification column in the production of acrylonitrile (T)

9. Benzyl Chloride Production 245

- Still bottoms from the distillation of benzyl chloride (T)

10. Carbon Tetrachloride Production 260

- Heavy ends or distillation residues from the production of carbon tetrachloride (T)

Page

11. Epichlorohydrin Production 286

- Heavy ends (still bottoms) from the purification column in the production of epichlorohydrin (T)

12. Ethyl Chloride Production 312

- Heavy ends fromt he fractionation column in ethyl chloride production (T)

13. Ethylene Dichloride and Vinyl Chloride Monomer Production ... 326

- Heavy ends from the distillation of ethylene dichloride in ethylene dichloride production (T)

- Heavy ends from the distillation of vinyl chloride in vinyl chloride monomer production (T)

14. Fluorocarbon Production 357

- Aqueous spent antimony catalyst waste from fluoromethanes production (T)

15. Phenol/Acetone Production 373

- Distillation bottom tars from the production of phenol/acetone from cumene (T)

16. Phthalic Anhydride Production 386

- Distillation light ends from the production of phthalic anhydride from naphthalene (T)

- Distillation bottoms from the production of phthalic anhydride from naphthalene (T)

- Distillation light ends from the production of phthalic anhydride from ortho-xylene (proposed) (T)

- Distillation bottoms from the production of phthalic anhydride from ortho-xylene (proposed) (T)

Page

17. Nitrobenzene Production 403

- Distillation bottoms from the production of nitrobenzene by the nitration of benzene (T)

18. Methyl Ethyl Pyridine Production 416

- Stripping still tails from the production of methyl ethyl pyridine (T)

19. Toluene Diisocyanate Production 431

- Centrifuge residues from toluene diisocyanate production (R,T)

20. Trichloroethane Production 444

- Waste from the product stream stripper in the production of 1,1,1-trichloroethane (T)

- Spent catalyst from the hydrochlorinator reactor in the production of 1,1,1-trichloroethane via the vinyl chloride process (T)

- Distillation bottoms from the production of 1,1,1-trichloroethane (proposed) (T)

- Heavy ends from the production of 1,1,1-trichloroethane (proposed) (T)

21. Trichloroethylene and Perchloroethylene Production 475

- Column bottoms or heavy ends from the combined production of trichloroethylene and perchloroethylene (T)

22. MSMA and Cacodylic Acid Production 500

- By-product salts generated in the production of MSMA and cacodylic acid (T)

23. Chlordane Production 523

- Wastewater and scrub water from the chlorination of cyclopentadiene in the production of chlordane (T)

Page

- Wastewater treatment sludges from the production of chlordane (T)

- Filter solids from the filtration of hexachlorocyclopentadiene in the production of chlordane (T)

- Vacuum stripper discharges from chlordene chlorinator in the production of chlordane (propsed) (T)

24. Creosote Production 544

- Wastewater treatment sludges generated in the production of creosote (T)

- Process wastewater from creosote production (proposed) (T)

25. Disulfoton Production 560

- Wastewater treatment sludges from the production of disulfoton (T)

- Still bottoms from toluene reclamation distillation in the production of disulfoton (T)

26. Phorate Production 573

- Wastewater treatment sludges from the production of phorate (T)

- Filter cake from the filtration of diethyl phosphorodithioic acid in the production of phorate (T)

- Wastewater from the washing and stripping of phorate production (T)

27. Toxaphene Production 585

- Wastewater treatment sludge from the production of toxaphene (T)

- Untreated process wastewater from the production of toxaphene (proposed) (T)

Page

28. 2,4,5-T Production 597

- Heavy ends or distillation residues from the distillation of tetrachlorobenzene in the productionof 2,4,5-T (T)

29. 2,4-D Production 610

- 2,6-Dichlorophenol waste from the production of 2,4-D (T)

- Untreated wastewater from the production of 2,4-D (proposed) (T)

30. Methomyl Production 623

- Wastewater from the production of methomyl (proposed) (T)

31. Explosives Industry 637

- Wastewater treatment sludges from the manufacturing and processing of explosives (R)

- Spent carbon from the treatment of wastewater containing explosives (R)

- Wastewater treatment sludges from the manufacture, formulation and loading of lead-based initiating compounds (T)

- Pink/red water from TNT operations (R)

32. Petroleum Refining 671

- Dissolved air flotation (DAF) float from the petroleum refining industry (T)

- Slop oil emulsion solids from the petroleum refining industry (T)

- Heat exchanger bundle cleaning sludge from the petroleum refining industry (T)

- API separator sludge from the petroleum refining industry (T)

- Tank bottoms (leaded) from the petroleum refining industry (T)

Page

33. Leather Tanning and Finishing Industry 709

- Chrome (blue) trimmings generated by the following subcategories of the leather tanning and finishing industry: hair pulp/chrome tan/retan/wet finish; hair save/chrome tan/retan/wet finish; retan/wet finish; no beamhouse; through-the-blue; and shearlings (T)

- Chrome (blue) shavings generated by the following subcategories of the leather tanning and finishing industry: hair pulp/chrome tan/retan/wet finish; hair save/chrome tan/retan/wet finish; retan/wet finish; no beamhouse; through-the-blue and shearlings (T)

- Buffing dust generated by the following subcategories of the leather tanning and finishing industry; hair pulp/chrome tan/retan/wet finish; hair save/chrome tan/retan/wet finish; retan/wet finish; no beamhouse; and through-the-blue (T)

- Sewer screenings generated by the following subcategories of the leather tanning and finishing industry: hair pulp/chrome tan/retan/wet finish; hair save/chrome tan/retan/wet finish; retan/wet finish; no beamhouse; through-the-blue; and shearlings (T)

- Wastewater treatment sludges generated by the following subcategories of the leather tanning and finishing industry: hair pulp/chrome tan/retan/wet finish; hair save/chrome tan/retan/wet finish; retan/wet finish; no beamhouse; through-the-blue; and shearlings (T)

- Wastewater treatment sludges generated by the following subcategories of the leather tanning and finishing industry: hair pulp/chrome tan/retan/wet finish; hair save/chrome tan/retan/wet finish; and through-the-blue (R,T)

Page

- Wastewater treatment sludges from the following subcategory of the leather tanning and finishing industry: hair save/non-chrome tan/retan/wet finish (R)

34. Coking 739

- Ammonia still lime sludge (T)

35. Electric Furnace Production of Steel 753

- Emission control dusts/sludges from the electric furnace production of steel (T)

36. Steel Finishing 767

- Spent pickle liquor from steel finishing operations (C,T)

- Sludge from lime treatment of spent pickle liquor from steel finishing operations (T)

37. Primary Copper Smelting and Refining 784

- Acid plant blowdown slurry/sludge resulting from the thickening of blowdown slurry from primary copper production (T)

38. Primary Lead Smelting 801

- Surface impoundent solids contained in and dredged from surface impoundments at primary lead smelting facilities (T)

39. Primary Zinc Smelting and Refining 819

- Sludge from treatment of process wastewater and/or acid plant blowdown from primary zinc production (T)

- Electrolytic anode slimes/sludges from primary zinc production (T)

- Cadmium plant leach residue (iron oxide) from primary zinc production (T)

Page

40. Secondary Lead Smelting 841

- Emission control dust/sludge from secondary lead smelting (T)

- Waste leaching solution from acid leaching of emission control dust from secondary lead smelting (proposed) (T)

Generic Listings

LISTING BACKGROUND DOCUMENT

Wastes from Usage of Halogenated Hydrocarbon Solvents in Degreasing Operations

The spent halogenated solvents used in degreasing, tetrachloroethylene, methylene chloride, trichloroethylene, 1,1,1-trichloroethane, carbon tetrachloride and the chlorinated fluorocarbons; and sludges resulting from the recovery of these solvents in degreasing operations. (T)*,**,***

I. SUMMARY OF BASIS FOR LISTING

Solvent degreasing operations remove grease, wax, dirt, oil, and other undesirable substances from various materials. All degreasing facilities which use the halogenated hydrocarbon solvents listed above generate spent solvent solutions which are either discarded or processed to recover the solvent from the spent solution. The recovery operations invariably generate solvent sludges.

---

* In December, 1978, the Agency proposed a generic listing for this class of wastes.

** These solvents are often marketed under trade names; the listing obviously includes all trade name solvents which containt he enumerated constituents of concern. Another point of consideration is that different names may be used to refer to the same solvent:

tetrachloroethylene = perchloethylene
1,1,1-trichloroethane = methyl chloroform
carbon tetrachloride = tetrachloromethane
methylene chloride = dichloromethane
trichloroethylene = 1,1,2-trichloroethylene

*** In response to industry comments, it should be noted that the Agency is no longer listing these wastes on the basis of ignitability, or EP toxicity. However, these solvents may be contaminated with heavy metals (i.e., lead and chromium) in the degreasing operations; therefore, the generator will be responsible for determining whether the waste would also meet the EP toxicity characteristic.

The Administrator has determined that spent halogenated solvents from degreasing and the sludges that result from associated solvent reclamation operations are solid wastes which may pose a substantial present or potential hazard to human health or the environment when improperly transported, treated, stored, disposed of, or otherwise managed; therefore, these wastes should be subject to appropriate management requirements under Subtitle C of RCRA.

For all of the listed waste solvents, this conclusion is based on the following considerations:

1. The chlorinated waste hydrocarbons are toxic and, in some cases, genetically harmful, while chlorofluorocarbons may remove the ozone layer following environmental release.

2. Approximately 99,000 metric tons of waste halogenated solvents from degreasing operations are generated each year(1). There are approximately 460,000 facilities dispersed throughout the country that use halogenated solvents and generate these wastes(1). It is estimated that about 30,000 metric tons per year of halogenated hydrocarbons from these facilities are either disposed of annually in landfills or by open-ground dumping, either as crude spent solvents or as sludges. The remainder of these wastes are usually incinerated. The large quantity of wastes generated and the large number of disposal sites utilized, increases the possibility of waste mismanagement and environmental release of harmful constituents.

3. Since a large majority of the spent solvents and sludges are in liquid form, the potential for these wastes to migrate from land disposal facilities is high. Further, the solubility of these solvents is uniformly high, increasing their migratory potential.

4. The spent solvent solution from degreasing operations contains up to 90 percent of the original solvent. Depending on the recovery technique, sludges that result from reclamation processes can contain up to 50 percent of the original solvent. Such high concentrations

of hazardous constituents increases the chance of waste constituents escaping in harmful concentrations.

5. Spent solvents can create an air pollution problem via the volatilization of the solvents from the wastes.

For the five chlorinated solvents (not including chlorofluorocarbons) found in the waste streams, this conclusion is based on the following considerations:

6. Incomplete combustion of the spent chlorinated hydrocarbon solvents during incineration can cause emissions of the solvent and generate toxic degradation products (e.g. phosgene).

7. These spent halogenated solvents can leach from the waste to effect adversely human health and the environment through the resulting contamination of groundwater.

8. Current waste management practices have resulted in environmental damage. These incidents serve to illustrate that the mismanagement of these wastes does occur and can result in substantial environmental and health hazards.

9. A number of these solvents are carcinogenic or mutagenic, or are suspected carcinogens or mutagens, and are lethally toxic to humans and animals.

For the chlorofluorocarbons, the Agency is basing the listing on the following consideration:

10. Chlorofluorocarbons, after release at the surface of the earth, mix with the atmosphere and rise into the stratosphere where they are decomposed by ultra violet radiation to release chorine atoms. These atoms catalytically remove ozone, leading to adverse effects, including skin cancer and climate changes.

II. OVERALL DESCRIPTION OF INDUSTRY USAGE

Degreasing operations are not industry specific. Degreasing operations are prevalent in twelve major SIC (Standard Industrial Classification) categories, numerous subcategories, and automotive maintenance shops. The pertinent industries where halogenated hydrocarbons are used primarily are presented in Table 1. A summary of the number and types of plants that conduct degreasing operations is presented in Table 2.

Table 1

Industries Using Halogenated Hydrocarbons in Degreasing Operations

Source	SIC Code
Metal Furniture	25
Primary Metals	33
Fabricated Products	34
Non-electric Machinery	35
Electric Equipment	36
Transportation Equipment	37
Instruments and Clocks	38
Miscellaneous Industry	39
Automotive Repair Shops	75
Automotive Dealers	55
Automotive Maintenance Shops	--
Texitile Plants (Fabric Scouring)	22
Gasoline Stations	55

Source	SIC	Number of Plants	Estimated Number of Vapor Degreasing Operations	Estimated Number of Cold Cleaning Operations
Material Degreasing				
Metal Furniture	25	9,233	492	22,869
Primary Metals	33	6,792	1,547	17,558
Fabricated Products	34	29,525	5,140	76,329
Non-electric Machinery	35	40,792	5,302	105,456
Electric Equipment	36	12,270	6,302	31,720
Transportation Equipment	37	8,802	1,917	22,756
Instruments and Clocks	38	5,983	2,559	15,467
Miscellaneous	39	15,187	886	39,262
Automotive				
Auto Repair Shops	75	127,203		141,977
Automotive Dealers	55	121,369		135,463
Gasoline Stations	55	226,445		277,440
Maintenance Shops		320,701		252,735
Textiles				
Textile Plants (Fabric Scouring)	22	7,201		
Total		931,513	24,145	1,230,006

*Includes facilities which do not use halogenated solvents

III. OVERALL PROCESS DESCRIPTION, WASTE GENERATION LEVELS AND GEOGRAPHIC DISTRIBUTION OF DEGREASING FACILITIES

1. Solvents Used in Degreasing Process

As indicated in Table 3, out of the more than 1,230,000 non-halogenated and halogenated degreasing operations (see Table 2), approximately 460,000 use halogenated solvents(1). Table 3 breaks down the number of plants which use halogenated solvents to show the estimated number of these plants using a particular halogenated solvent by their type of degreasing operation. As the table indicates, the largest number of these plants use cold cleaning and open top vapor degreasing operations (see next section for more detailed discussion of specific degreasing operations). In both of these operations, the largest number use trichloroethylene and trichlorethane. Of the industries with conveyorized vapor degreasing operations, the largest number use trichloroethylene; fabric scouring operations use principally tetrachloroethylene (perchloroethylene). Overall, trichloroethylene is the solvent used most prevalently.

2. Process Description

Degreasing operations may be classified into four basic categories: cold cleaning, vapor degreasing (open top), vapor degreasing (conveyorized), and fabric scouring.

In cold cleaning operations, the solvent is maintained well below its boiling point. The item to be cleaned is either immersed in agitated solvent

Table 3 - Estimated Number of Plants using Halogenated Solvents by Type of Degreasing (1974) (1)

Solvent	Vapor (open top)	Cold Cleaning	Vapor Conveyorized	Fabric Scouring
bon tetrachloride		10,568		
orocarbons*	2,130	66,932	319	
hylene Chloride	298	21,136	45	
rachloroethylene	3,121	45,795	467	2,522
chloroethylene	11,440	149,715	1,713	693
chloroethane	4,011	137,386	601	
Total	21,000	431,532	3,145	3,215

Note: Blanks indicate no use of specified solvent in that type of degreasing operation.

*This refers to all fluorocarbons, some of which are chlorinated.

or suspended above the solvent where it is systematically sprayed in a manner similar to that of an automatic dish washer. Simple cold cleaning operations may even consist of a container of solvent in which items are manually immersed, as is the case in small auto repair shops and in service stations.

Simple vapor degreasing (open top) is achieved by suspending the item to be cleaned above the boiling solvent in a vat. Condensation continues until the temperature of the object approaches that of the solvent vapors. Often the suspended item is sprayed with liquid solvent to facilitate further degreasing. In order to control vapor emissions, a layer of cold air is often maintained above the open top degreaser.

The conveyorized vapor degreaser operates in much the same manner, except that the objects to be cleaned are continuously conveyed through the vapor zone. Auxiliary solvent sprays are also used to improve the cleaning efficiency of the operations.

Fabric scouring operations are slightly more complex. Generally, the fabric is conveyed through the degreasing machine, where it is sprayed with solvents. The solvents are then removed with an aqueous solution of alcohol.

3. Waste Generation Levels and Projected Levels

The annual growth rate for the use of the listed halogenated solvents in degreasing applications is expected to

be 4 percent(1). Growth is expected to be uniform among the various solvents, except for trichloroethylene, which has been banned in several states for use in occupational settings because it is a carcinogen. (1,2,21). In California, the use of trichloroethylene has been restricted by legislation, but tetrachloroethylene and 1,1,1-trichloroethane are exempt(1) from the restrictions and are still used in degreasing operations. Rhode Island has completely banned the use of trichloroethylene(2).

4. Geographic Distribution of Degreasing Operations

The location of the vapor degreasing operations has been determined by identifying the industries with which the operations are associated. There are about 24,145 vapor degreasing operations in the United States, which consume about 52 percent of the total halogenated solvents used(1). More than 63 percent of these operations are found in nine states (California, Illinois, Massachusetts, Michigan, New Jersey, New York, Ohio, Pennsylvania and Texas). Figure 1 and the associated Table 4 present the geographic distribution of these plants.

There are about 431,532 operations that perform cold cleaning using about 35 percent of the total halogenated solvent consumption, while approximately 3,125 fabric scouring operations consume about 13 percent of the total halogenated solvent(1). Assuming an equal distribution of halogenated solvent use among cold cleaning and fabric scouring operations, over 59 percent

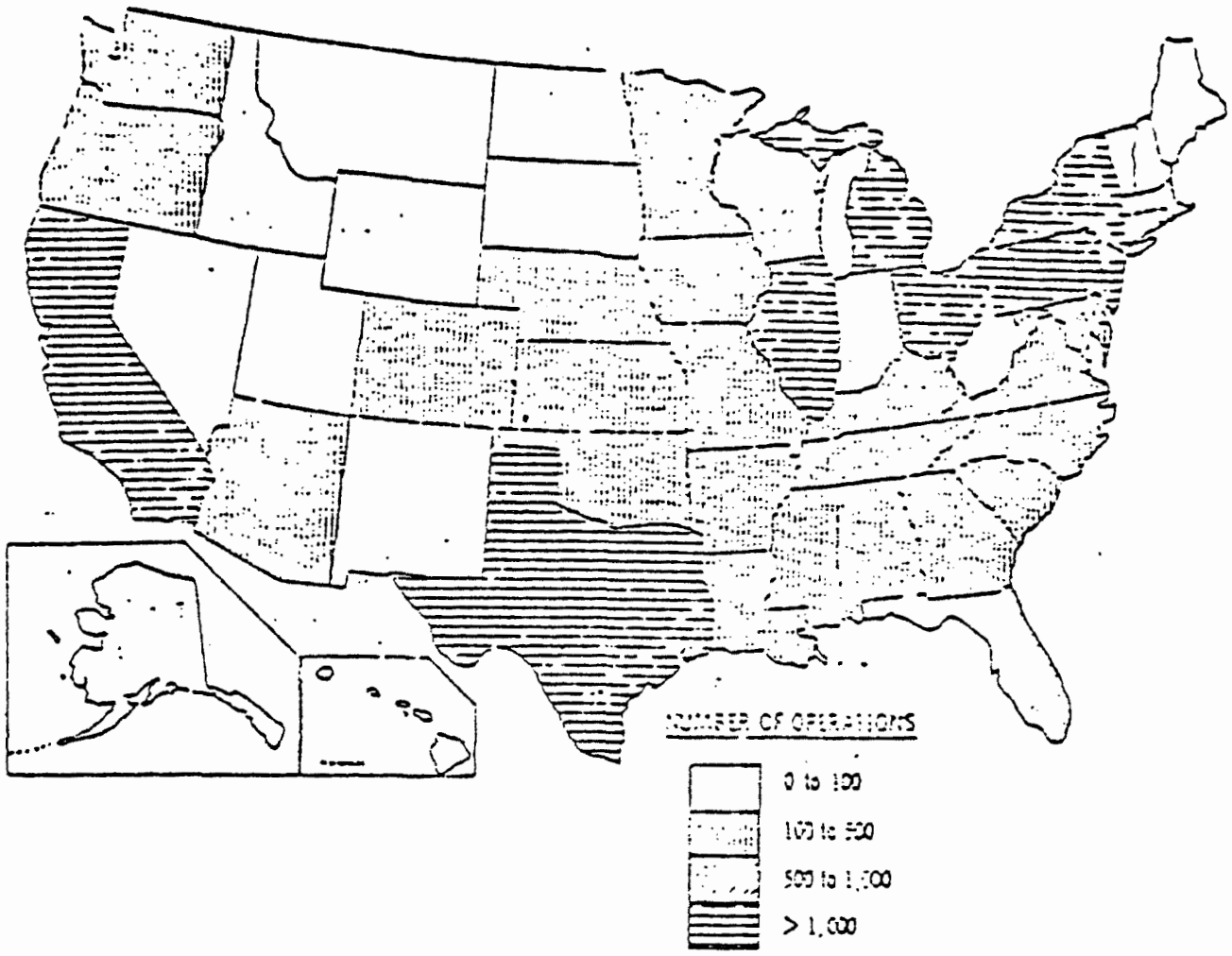

Figure 1 - GEOGRAPHIC DISTRIBUTION OF VAPOR DEGREASING OPERATIONS (1)

Table 4 - GEOGRAPHIC DISTRIBUTION OF VAPOR (OPEN TOP AND CONVEYORIZED) DEGREASING OPERATIONS (1).

State	Number of plants	State	Number of plants
Alabama	247	Montana	25
Alaska	0	Nebraska	102
Arizona	169	Nevada	30
Arkansas	147	New Hampshire	96
California	3,313	New Jersey	1,200
Colorado	219	New Mexico	54
Connecticut	648	New York	2,514
Delaware	29	North Carolina	407
District of Columbia	11	North Dakota	20
Florida	730	Ohio	1,576
Georgia	315	Oklahoma	255
Hawaii	29	Oregon	246
Idaho	39	Pennsylvania	1,346
Illinois	1,737	Rhode Island	321
Indiana	688	South Carolina	143
Iowa	225	South Dakota	25
Kansas	217	Tennessee	356
Kentucky	193	Texas	1,119
Louisiana	174	Utah	99
Maine	65	Vermont	39
Maryland	227	Virginia	218
Massachusetts	923	Washington	314
Michigan	1,339	West Virginia	38
Minnesota	426	Wisconsin	604
Mississippi	116	Wyoming	7
Missouri	455	Total	24,145

of the total halogenated solvent used for degreasing occurs in ten states (California, Illinois, Massachusetts, Michigan, New Jersey, New York, Ohio, Pennsylvania, Texas and North Carolina).

IV. WASTE STREAM SOURCES AND DESCRIPTION

The usefulness of a solvent decreases with time as contaminants adulterate and become concentrated in the solvent. When the boiling point of the solution (i.e., solvent and contaminants) increases to about 30°C above that of the pure solvent, the solvent is discarded. Halogenated solvent use pattern by type of degreasing operation is presented in Table 5. Approximately 527,520 metric tons of halogenated solvents are used each year for degreasing operations(1).

Spent solvent solutions are either disposed of, reclaimed and recycled by the waste generator, or processed by a contract solvent reclamining operator.* Reclamation is achieved via settling and/or batch distillation. The listed sludge results from this reclamation process.

The composition of the spent solvent is dependent on the application of the degreasing operation. The spent solvent

*At this time, applicable requirements of Parts 262 through 265 and 122 will apply insofar as the accumulation, storage and transportation of hazardous wastes that are used, reused, recycled or reclaimed. The Agency believes this regulatory coverage is appropriate for the subject wastes. These wastes are hazardous insofar as they are being accumulated, stored or transported. These wastes may not pose a substantial hazard during their recycling and, even though its listed as hazardous, this aspect of their management is not presently being regulated.

USE PATEERN OF HALOGENATED SOLVENTS IN DEGREASING AND

FABRIC SCOURING OPERATIONS IN 1974

Chemical	Total U.S. Consumption (10^3 kkg)	U.S. Consumption for Degreasing (10^3 kkg)		U.S. Consumption for Fabric Scouring (10^3 kkg)	Total U.S. Consumption for Degreasing and Scouring (10^3 kkg)
		Cold	Vapor		
Halogenated hydrocarbons:					
Carbon tetrachloride	534.8	0.72	5		5.72
Fluorocarbons*	428.6	6	11.1		17.1
Methylene Chloride	235.4	46.2	10		56.2
Perchloroethylene	330.2	11.4	43	54.6	109
Trichloroethylene	173.7	43.8	112.7	15	171.5
Trichloroethane	236.3	78	90		168
TOTAL	1939.0	186.12	271.8	69.6	527.52

*This refers to all fluorocarbons, a percentage of which are chlorinated.

solution contains up to 90 percent of the original solvent(4). Depending on the recovery technique, sludges which result from reclamation processes contain from 1 to 50 percent of the original hydrocarbon solvent(5). However, because of the economic considerations of the reclaiming process, the solvent content of the sludge is seldom reduced below 10 percent. Heavy metal fines and other organics are also present in these wastes, in addition to the original solvent(3).

V. QUANTITIES OF THE WASTE AND TYPICAL DISPOSAL PRACTICES

Disposal practices include overt open ground dumping, containerized landfilling, and incineration (3). Approximately 99,000 metric tons of waste halogenated solvents from degreasing operations are generated annually(1). It is estimated that about 30,000 metric tons of these are either landfilled or open ground dumped. The remaining quantity of waste halogenated solvents from degreasing operations are incinerated. The rationale and derivation of this estimated quantity is presented in Appendix I.

VI. HAZARDOUS PROPERTIES OF THE WASTES

As indicated earlier, the spent halogenated solvents and sludges from the reclamation of these solvents contain very significant concentrations of the solvent itself -- the spent solvent solution contains up to 90 percent of the original solvent and the sludge contains a minimum of 10 percent of the original solvent. The landfilling or open ground dumping of these wastes in an unsecure land disposal facility may

result in the migration of the toxic halogenated solvents into the surrounding environment, thus becoming a potential contaminant of groundwater. For example, since a large majority of these wastes are in liquid form -- including all of the spent solvents -- these wastes' physical form makes them amenable to migration from a the land disposal facility. Additionally, the solubility in water of these halogenated solvents is quite high (13): 1,1,1-trichloroethane - 950 mg/l, tetrachloroethylene 45,000 mg/l, methylene chloride - 20,000 mg/l, carbontetrachloride 800 mg/l, and trichloroethylene - 1,000 mg/l(36). Again, these high solubilities demonstrate a strong propensity to migrate from inadequate land disposal facilities in substantial concentrations. Thus, improperly constructed or managed landfills (for example, landfills located in areas with permeable soils, or landfills with inadequate leachate control practices) could easily fail to impede leachate formation and migration. Haphazard dumping of the wastes is even more likely to result in migration of waste constituents.

Once released from the matrix of the waste, the halogenated solvents could migrate through the soil to ground and surface waters utilized as drinking water. In the National Organics Monitoring Survey, the Agency detected a number of these solvents in drinking water samples tested over the past several years, thus demonstrating the propensity of these solvents to migrate from the

waste disposal environment and to persist in drinking water following migration* (14a, 14b, 14c, 14d, 14e). In addition, a number of actual documented damage incidents show the potential for a very common halogenated solvent, trichloroethylene, to leach from disposal sites into groundwater. (See Damage Incidents Resulting from the Mismanagement of Halogenated Hydrocarbons, p. 17.)

These actual damage incidents confirm literature data points indicating the environmental persistence of these compounds. Thus, 1,1,1-trichloroethane, methylene chloride, and carbon tetrachloride are all likely to persist in the environment long enough to reach environmental receptors (1,1,1-trichloroethane is subject to hydrolysis, but has a half-life in groundwater of 6 months)(37).

Another problem which could result from improper landfilling of these wastes is the potential for the contaminants to volatilize into the surrounding atmosphere. All of the listed chlorinated solvents are volatile and thus could present an air pollution problem if they are improperly managed (for example, disposed of in the open, or without adequate cover), since they are uniformly toxic via inhalation.

A special problem is posed by chlorofluorocarbon solvents. These solvents are also highly volatile, but instead of posing a direct toxicity hazard, they may be released at the surface of the earth, mix with the atmosphere and rise slowly into the stratosphere,

*The specific solvents detected in these samples were methylene chloride, carbon tetrachloride, trichloroethylene, and trichloroethylene and trichlorofluoromethane.

Damage Incidents Resulting From The Mismanagement of Trichloroethylene

1. In one incident in Michigan, an automotive parts manufacturing plant routinely dumped spent degreasing solutions on the open ground at a rate of about 1000 gallons per year from 1968 to 1972. Trichloroethylene was one of the degreasing solvents present in the spent solutions. Beginning in 1973, trichloroethylene was detected at levels up to 20 mg/l in neary residential wells. The dump site was the only apparent source of possible contamination (10).
2. In a second incident, also in Michigan, an underground storage tank leaked trichloroethylene which was detected in local groundwater up to four miles away from the land (11).
3. In April of 1974, a private water well in Bay City, Michigan became contaminated by trichloroethylene. The only nearby source of this chemical was the Thomas Company (which replaced the well with a new one). The company claimed that, although it had discharged trichloroethylene into the ground in the past, it had not done so since 1968. Nethertheless, in May of 1975, two more wells were reported to be contaminated with trichloroethylene at concentrations of 20 mg/l and 3 mg/l, respectively (12).

where they are decomposed by ultra violet radiation to release chlorine atoms. The chlorine atoms catalytically remove ozone, thereby reducing the total amount of ozone in the stratosphere, leading to an increase in skin cancer, climatic changes and other adverse effects (33,34).

In March, 1978, EPA banned the use of chlorofluorocarbons in aerosol propellants. The primary concern in the enactment of this ban was the ozone depletion effects resulting from chlorofluorocarbons entering the stratosphere and reacting with the ozone. The Agency's concern, however, is with chlorofluorocarbon use in general, due to the present or future health and environmental hazards resulting from their use. Therefore, the Agency has proposed the regulation of non-aerosol uses of chlorofluorocarbons(8).

Additionally, the U.S. EPA is expecting to propose regulations controlling the airborne emissions of these solvents and other volatile organics so as to reduce the air pollution problems presented when these solvents are used or disposed. These proposed regulations will apply certain standards to a number of the Volatile Organic Compounds (VOC) which have been demonstrated to be percursors of the to the formation of ozone and other photochemical oxidants in the atmosphere. Ozone air pollution endangers the public health and welfare and is thus reflected in the Administrator's promulgation of a National Ambient Air Quality Standard for Ozone (February 8, 1979, 44 FR 8202). Additionally, 1,1,1-trichloroethane and

methylene chloride, which are not ozone percursors, are being regulated under the proposed rule since under EPA's proposed airborne carcinogen policy, a compound which shows evidence of human carcinogenicity is a candidate for regulation under Section 111 as a pollutant "reasonably anticipated to endanger public health and welfare". Finally, trichlorofluoromethane, as indicated in the earlier discussion of chlorofluorocarbons in general, has been implicated in the depletion of the stratospheric ozone layer, a region of the upper atmosphere which shields the earth from harmful wavelengths of ultra violet radiation, that would increase skin cancer risks in humans.(33,34)

If these wastes are incinerated, as a large percentage are, and the wastes are not subject to proper incineration conditions (i.e., temperature and residence times), pollution of the environment may result from the airborne disposal of uncombusted halogenated organics, partially combusted organics and newly formed organic compounds. Phosgene is an example of a partially combusted chlorinated organic which is produced by the decomposition or combustion of chlorinated organics by heat(15,16,17). Phosgene has been used as a chemical warfare agent and is recognized as extremely toxic.

The large quantities of the spent solvent and sludges resulting from the recovery of these solvents, a combined total of 99,000 metric tons per year, are another area of concern.

As previously indicated, these wastes are generated in substantial quantities and contain very high concentrations of the original solvent (the spent solvent solution contains up to 90 percent and the sludges contain up to 50 percent of the original solvent). The large quantities of these contaminants pose the danger of polluting large areas of ground or surface waters. Contamination could also occur for long periods of time, since large amounts of pollutants are available for environmental loading. All of these considerations increase the possibility of exposure to the harmful constituents in the wastes.

VII. HEALTH AND ECOLOGICAL EFFECTS ASSOCIATED WITH THE CONSTITUENTS IN THE WASTES

The toxicity of tetrachloroethylene, methylene chloride, 1,1,1-trichlorethane, trichloroethylene, carbon tetrachloride and chlorofluorocarbons has been well documented. Capsule descriptions of the adverse health and environmental effects are summarized below; more detail on the adverse effects of these solvents can be found in Appendix A.

Tetrachloroethylene has been included on EPA's list of chemicals which have demonstrated substantial evidence of carcinogenicity.(21) In addition, repeated exposure in rats and mice to tetrachloroethylene in air or in the diet has resulted in central fatty degeneration in the liver, increased kidney weights and toxic nephropathy.(18,19,20). Additionally, tetrachloroethylene has demonstrated toxicity to freshwater fish(14b,22,23).

Methylene chloride has been shown to be mutagenic(24). In addition, acute exposure to methylene chloride in humans is a central nervous system depressant resulting in narcosis in high concentrations and is metabolized to carbon monoxide and causes an increase in carboxy-hemoglobin(25).

1,1,1-trichloroethane has been shown in an NCI bioassay for carcinogenicity to induce a variety of neoplasms(26). A high incidence of deaths in test animals has led to retesting of this compound by NCI(26). Human toxic effects seen after exposure to 1,1,1-trichloroethane include several central nervous system functions, including reaction time, perceptual speed, manual dexterity and equilibrium(27). In addition, animal studies have produced toxic effects in the central nervous system, cardiovascular system, pulmonary system, and induced liver and kidney damage(27).

Trichloroethylene has been included on EPA's list of chemicals which have demonstrated substantial evidence of carcinogenicity.(21) Trichloroethylene has also been shown, both through acute and chronic exposure, to produce disturbances of the central nervous system and other neurological effects(28,29,30).

Carbon tetrachloride has been included on EPA's list of chemicals which have demonstrated substantial evidence of carcinogenicity.(21) In addition, toxicological data for non-human mammals are extensive and show carbon tetrachloride to cause liver and kidney damage, biochemical changes in

liver function and neurological damage(32).

The hazards associated with exposure to the above halogenated solvents have been recognized by other regulatory programs. Tetrachloroethylene, methylene chloride, 1,1,1-trichloroethane, trichloroethylene, carbon tetrachloride and the two fluorocarbons, trichlorofluoromethane and dichlorodifluoromethane, are listed as priority pollutants in accordance with §307 of the Clean Water Act of 1977. Under §6 of the Occupational Safety and Health act of 1970, final standards for occupational exposure have been established and promulgated in 29 CFR 1910.1000 for carbon tetrachloride, methylene chloride and 1,1,1-trichloroethane. On March 17, 1979, fully halogenated fluorocarbons were banned by the Consumer Products Safety Commission as propellants in the United State, except for essential uses because of their threat to the ozone. In addition, final or proposed regulations in the States of California, Louisiana, Maryland, Massachusetts, Minnesota, Missouri, New Mexico, Oklahoma and Vermont define compounds containing one or more of the solvents tetrachloroethylene, methylene chloride, 1,1,1-trichloroethane, trichloroethylene, carbon tetrachloride and trichlorofluoromethane as hazardous wastes or components thereof.[35]

ATTACHMENT I

DERIVATION OF THE ESTIMATED QUANTITIES OF THE WASTE

I. ANNUAL QUANTITIES OF WASTES

Total amount of spent solvents (Halogenated and non-halogenated)(1) = 425,560 kkg

Total amount of spent solvents from vapor degreasing(1) = 54,560 kkg

Vapor degreasing units only use halogenated solvents so all of the 54,560 kkg from this source are halogenated solvents. Cold cleaners and fabric scourers use both halogenated and non-halogenated solvents. Assume that the spent solvent solutions contain solvents in the same proportion as their use. About 12 percent of solvent use in applications other than vapor degreasing is halogenated(1).

∴ (425,560 kkg - 54,560 kkg) (0.12)(1)
= 44,250 kkg of halogenated solvents contained in wastes from sources other than vapor degreasing

54,560 kkg + 44, 520 kkg = 99,000 $\frac{kkg}{yr}$ of halogenated solvents

II. DISPOSITION OF WASTE

The disposition of about 30 percent of these wastes can be derived from information which is documented in the literature. The disposition of the remaining 70 percent is based upon extrapolations and economic consideration of waste management alternatives.

A. DISPOSITION OF 30 PERCENT OF THE WASTE

- Vapor degreasers only use halogenated solvents(1)
- Virtually all metal finishing shops (SIC 35, 36, 37, and 39), and by implication vapor degreasing operations, either reclaim their spent solvents or sell them to solvent refiners.(1,3)
- Between 50-99 percent of the solution is recovered(4,5)
- Approximately 37 percent of the plants which recover these solvents on site dispose of their waste sludges in landfills(3).

  (amount of waste) (1-percent recovery)(percent of plants with on site recovery) x (percent of plants that landfill) = Amount of waste landfilled.

1. Assume 50 percent of the solution is recovered

(54,560 kkg) (0.50)(0.37)(0.70) = 7,065 kkg

2. Assume 99 percent of the solution is recovered

(54,560 kkg) (0.01) (0.37)(0.70) = 140 kkg

140 kkg to 7,065 kkg of halogenated solvents disposed of in landfills.

About 20 percent of the solvent reclaimers which process the remaining 63 percent of the solvents from this source also landfill their waste. The remaining 80 percent of the solvent reclaimers reportedly incinerate their sludges(4,5). Therefore an additional 109 to 5,456 kkg of halogenated solvents are landfilled by solvent reclaimers.

B. DISPOSITION OF THE REMAINING 70 PERCENT OF THE WASTE

The wastes generated by the plants in the SIC categories delineated above represent about 60 percent of all vapor degreasing operations and about 30 percent of all wastes generated by all degreasers. Reportedly, a facility which generates at least 350 gallons of spent halogenated solvents anually has economic incentive to implement a recovery strategy(4,9). Virtually all vapor degreasers meet this criteria.

The disposition of spent solutions from cold cleaning and fabric scouring operations is not as well defined. In order to account for these wastes, some economic factors have been considered. In general, it is expected that a plant or industry which has a high incidence of use of a relatively expensive solvent will probably have some kind of recovery strategy, assuming the scale of operations permits an acceptable payback period. In cold cleaning and fabric scouring operations, the following factors are pertinent:

- Cold cleaning and fabric scourers use halogenated solvents in conjunction with inexpensive non-halogenated solvents. It has been estimated that these operations must have six to twelve times the solvent throughput of plants which only use halogenated solvents in order to economically justify a recovery strategy.

- Cold cleaning and fabric scouring operations represent about 94.7 percent of all facilities that use halogenated solvents but only use about 48 percent of the total supply of these solvents

that are used for degreasing. The implication is that, on the average, the solvent throughput rate is much lower in this segment of the degreasing industry than that of the vapor degreasing segment.

Although some cold cleaning and fabric scouring operations probably operate on a scale that would make a recovery strategy economically attractive, it is not possible to estimate the extent of recovery operations in this segment of the industry. The economics seem to indicate that the incidence of recovery from these operations is probably very low.

C. THE GROSS ESTIMATE

In estimating the disposition of all the wastes, the best and worst cases pertaining to the portion of the waste which cannot be documented in the literature are considered. The ideal case is where all of the wastes from cold cleaning and fabric scouring operations are processed by contract reclaimer using maximum efficiency recovery techniques (i.e., 99 percent recovery). The worst case would be where all of this waste is simply disposed of. The following is the basis for the estimate.

From Section A

249 kkg to 12,521 kkg of halogenated solvents are landfilled.

Best Case for Cold Cleaning and Fabric Scouring

(amount of waste)(percent recovered)(percent landfilled) = amount landfilled

(44,520 kkg)(0.01)(0.2) = 90 kkg of waste landfilled

Worst case for cold cleaning and fabric scouring is when all 44,520 kkg of waste is landfilled

The estimated best and worst cases for the disposition of halogenated solvents from all types of degreasing operations are 339-57,041 metric tons per year. It is unlikely that either the best or worst case is representative of reality. In this case, about half of the waste is generated by vapor degreasers where it is likely that the incidence of recovery is high. The remaining half is generated in environments where

the incidence of recovery is probably very low. A reasonable inference and prudent estimate based on available data would be about 30,000 metric tons per year of halogenated solvents disposed of on land.

REFERENCES

1. United States Environmental Protection Agency. 1979. Source Assessment: Solvent Evaporation - Degreasing Operations.

2. Mansville Chemical Products. 1976. Chemical Products Synopsis-Trichloroethylene.

3. United States Environmental Protection Agency. 1976. Assessment of Industrial Hazardous Waste Practices Electroplating and Metal Finishing Industries - Job Shops Pb-264-349.

4. United States Environmental Protection Agency. 1979. Organic Solvent Cleaners-Background Information for Proposed Standards. EPA-45/12-78-045a.

5. United States Environmental Protection Agency. 1978. Source Assessment: Reclaiming of Waste Solvents. State of the Art. Pb-289-934.

6. United States Environmental Protection Agency. 1977. Assessment of Industrial Hazardous Waste Practice Special Machinery Manufacturing Industries. PB-265-981.

7. Scheflan, L., Jacobs, M.B., 1953. The Handbook of Solvents, D. Van Nostrand Company, Inc., New York.

8. March 17, 1978, 43 FR 11301.

9. United States Environmental Protection Agency. 1977. Control of Volatile Organic Emissionf From Solvent Metal Cleaning. EPA-450/2-77-022.

10. Michigan Department of Natural Resources - Geological Survey Division. Case History #48.

11. Shellenbarger, P. 1979. "New Charge Hits Air Force." The Detroit News, May 17, 1979.

12. Mitre Corporation. 1979. Draft Report in Support of Sub-Section C. Prepared for U.S. Environmental Protection Agency.

13. Technical Support Document for Aquatic Fate and Transport Estimates for Hazardous Chemical Exposure Assessments. 1980, USEPa, Environmental Research Laboratory, Athens, Georgia

14a. U.S. EPA. 1979. Trichloroethylene: Ambient Water Quality Criteria. U.S. Environmental Protection Agency.

14b. U.S. EPA. 1978. In-depth Studies on Health and Environmental Impacts of Selected Water Pollutants. Contract No. 68-01-4646. U.S. Environmental Protection Agency.

14c. U.S. EPA. 1975. Preliminary Assessment of Suspected Carcinogens in Drinking Water, and Appendices. A Report to Congress, Washington, D.C.

14d. U.S. EPA. 1977a. Determination of Sources of Selected Chemicals in Waters and Amounts from These Sources. Draft Final Report. Contract No. 68-01-3852. U.S. Environmental Protection Agency.

14e. U.S. EPA. 1978b. The National Organic Monitoring Survey. Rep. (unpublished), Tech. Support Div., Off. Water Supply, Washington, D.C.

15. "Combustion Formation and Emission of Trace Species", John B. Edwards, Ann Arbor Science, 1977.

16. NIOSH Criteria for Recommended Standard: Occupational Exposure to Phosgene, HEW, PHS, CDC, HIOSH, 1976.

17. Chemical and Process Technology Encyclopedia, McGraw Hill, 1974.

18. National Cancer Institute. 1977. Bioassay of Tetrachloroethylene for Possible Carcinogenicity. CAS No. 127-18-4 NCI-CG-TR-13 DHEW Publication No. (NIH) 77-813.

19. Rowe, V.K., et al. 1952. Vapor Toxicity of Tetrachloroethylene for Laboratory Animals and Human Subjects. AMA Arch. Ind. Hyg. Occup. Med. 5:566.

20. Klaassen, C.D., and G.L. Plaa. 1967. Relative Effects of Chlorinated Hydrocarbons on Liver and Kidney Function in Dogs. Toxicol. Appl. Pharmacol. 10:119.

21. The U.S. EPA. Carcinogen Assessment Groups. List of Carcinogens. April 22, 1980.

22. Alexander, H., et al. 1978. Toxicity of Perchloroethylene, Trichloroethylene, 1,1,1-Trichloroethane, and Methylene Chloride to Fathead Minnows. Bull Environ. Contam. Toxicol. 20:344.

23. U.S. EPA. 1979. Tetrachloroethylene: Ambient Water Quality Criteria (Draft).

24. Simmon, V.F. et al. 1977. Mutagenic Activity of Chemicals Identified in Drinking Water. S. Scott, et al., eds. In Progress in Genetic Toxicology.

25. National Academy of Sciences. 1978. Nonfluorinated Halomethanes in the Environment. Washington, D.C.

26. National Cancer Institute. 1977. Bioassay of 1,1,1-Trichloroethane for Possible Carcinogenicity. Carcinog. Tech. Rep. Ser. NCI-CG-TR-3.

27. U.S. EPA. 1979. Chlorinated Ethanes: Ambient Water Quality Criteria. (Draft)

28. Nomiyama, K., and H. Nomiyama. 1971. Metabolism of Trichloroethylene in Human Sex Differences in Urinary Excretion of Trichloroacetic Acid and Trichloroethanol. Int. Arch. Arbeitsmed. 28:37.

29. Bardodej, A., and J. Vyskocil. 1956. The Problem of Trichloroethylene in Occupational Medicine. AMA Arch. Ind. Health 13:581.

30. McBirney, B.S., 1954. Trichloroethylene and Dichloroethylene Poisoning. AMA Arch. Ind. Hyg. 10:130.

31. U.S. EPA. 1979a. Carbon Tetrachloride: Ambient Water Quality Criteria Document. (Draft)

32. Von Oettingen, W.F. 1964. The Halogenated Hydrocarbon of Industrial and Toxicological Importance. In E. Browning, ed. Elsevier Monographs on Toxic Agents. Elsevier Publishing Company, New York.

33. National Academy of Sciences, National Research Council. 1976. Halocarbons: Environmental Effects of Chloromethane Release.

34. National Academy of Sciences, National Research Council. 1979. Stratospheric Ozone Depletion by Halocarbons: Chemistry and Transport.

35. U.S. EPA States Regulations Files; January 1980.

36. U.S. EPA. 1979. Trichloroehylene Ambient Waste Quality Criteria Draft.

37. Dawson, English, Petty, 1980, "Physical Chemical Properties of Hazardous Waste Constituents".

WASTES FROM USAGE OF ORGANIC SOLVENTS

I. LISTING

The listed wastes are those major streams which result from usage of organic solvents and which contain a significant concentration of one or more organic solvents. The solvents referred to include both halogenated and non-halogenated organic compounds. The specific wastes listed are presented below.

The spent halogenated solvents tetrachloroethylene, methyl chloride, trichloroethylene, 1,1,1-trichloroethane, chlorobenzene, 1,1,2-trichloro-1,2,2-trifluoroethane, o-dichlorobenzene, trichlorofluoromethane, and the still bottoms from the recovery of these solvents (T);

The spent non-halogenated solvents xylene, acetone, ethyl acetate, ethyl benzene, ethyl ether, n-butyl alcohol, cyclohexanone and the still bottoms from the recovery of these solvents (I);

The spent non-halogeanted solvents, cresols and cresylic acid, nitrobenzene and the still bottoms from the recovery of these solvents (T); and

The spent non-halogenated solvents, methanol, toluene, methyl ethyl ketone, methyl isobutyl ketone, carbon disulfide, isobutanol, pyridine and the still bottoms from the recovery of these solvents (I,T).

Listing codes for the most widely used halogenated organic solvents are presented on Table I-1, and codes for widely-used non-halogenated organic solvents are on Table I-2.

II. SUMMARY OF BASIS FOR LISTING

Wastes resulting from usage of organic solvents typically contain significant concentrations of the solvent. Examples of wastes from usage of organic solvents include still-bottoms from solvent recovery and spent solvents from dry cleaning operations and maintenance and repair shops.

The Administrator has determined that waste from usage of the 24 organic solvents listed in Tables I-1 and I-2 may be a solid waste, and as a solid waste, may pose a substantial present or potential hazard to human health or the environment when improperly transported, treated, stored, disposed of or otherwise managed, and therefore should be subject to appropriate management requirements under Subtitle C of RCRA. This conclusion is based on the following considerations*:

1. Of the list of 24 solvent types presented in Tables I-1 and I-2, each solvent exhibits one or more properties (i.e., ignitability and/or toxicity)

*The Agency is presently aware that these solvents may contain concentrations of additional toxic constituents listed in Appendix VIII of the regulations. For purposes of this listing, however, the Agency is only listing those wastes for the presence of the halogenated and non-halogenated solvents. The Agency expects to study these listings further to determine whether the waste solvent and still bottom listings should be amended.

TABLE I-1

LISTING CODES FOR HALOGENATED ORGANIC SOLVENTS*
(in order of usage as solvent)

Solvents	Listing Codes	Flash Point (°F)
Perchloroethylene	T	-
Methylene chloride	T	-
Trichloroethylene	T	-
1,1,1,-Trichloroethane	T	-
Chlorobenzene	T	-
1,1,2-Trichloro-1,2,2-Trifluoroethane	T	-
o-Dichlorobenzene	T	-
Trichlorofluoromethane	T	-

*All data in this table are based on information contained in Reference (1). Dashes in place of data mean either the values were not available or (in the case of flash points) not applicable.

TABLE I-2

LISTING CODES FOR NON-HALOGENATED ORGANIC SOLVENTS*
(in order of usage as solvent)

Solvents	Listing Codes	Flash Point (°F)
Xylenes	I**	84(2)
Methanol	I,T**	54
Toluene	I,T**	39
Methyl ethyl ketone	I,T**	22(3)
Acetone	I**	3
Methyl isobutyl ketone	I,T**	61
Carbon disulfide	I,T**	-25
Ethyl acetate	I**	45(2)
Ethyl benzene	I**	59
Ethyl ether	I**	-49(2)
n-Butyl alcohol	I**	115
Isobutanol	I,T**	82
Cresols and cresylic acid	T	-
Cyclohexanone	I**	111(3)
Nitrobenzene	T	-
Pyridine	I,T**	68

* All data on this table are based on information contained in Reference (1) except as noted. Dashes in place of data mean either that the values were not available or (in the case of flash points) not applicable.

**Because the listed waste would contain a large percentage of these solvents, the listed wastes would fail the ignitability characteristic for liquids--a flash point less than 60°C (140°F).

which pose a potential hazard. These solvents represent approximately 95 percent or more of organic solvent usage in the United States (see Table II-1).

2. The use of organic solvents is widespread throughout the United States, and the quantities involved are large; according to Table II-1 the total annual usage of the listed materials as solvents is over 2.8×10^6 kkg.

3. Of the twenty-four solvents listed in Tables I-1 and I-2, seven are listed for meeting only the ignitability characterisitc. These seven spent solvents all have a flash point below 60°C (140°F) and are thus considered hazardous.

   The seventeen solvents listed as either toxic or toxic and ignitable pose a further hazard to human health and the environment. If improperly managed, these solvents could migrate from the disposal site into ground and surface waters, persist in the environment for extended periods of time, and cause substantial hazard to environmental receptors.

   The two fluorocarbons, 1,1,2-trichloro-1,2,2-trifluoroethane and trichlorofluoromethanes present a different type of hazard. Due to their high volatility, these two organics can rise into the stratosphere and deplete the ozone, leading to adverse health and environmental effects.

4. Damage incidents resulting from the mismanagement of waste solvents have been reported. These damage incidents are of three types:

   (a) Fire/explosion damage resulting from ignition of the solvents;

   (b) Contamination of wells in the vicinity of inadequate waste storage or disposal (with resulting illness in at least one instance); and

   (c) Direct entry of solvent into a waterway, resulting in fish kills.

5. These damage incidents show that mismanagement occurs and that substantial hazard to human health and the environment may result therefrom.

Table II-1

RANKING AND AMOUNTS OF THE LISTED SOLVENTS[1]

Chemical Name	Amount Used As Solvent (kkg/yr)
Xylenes	489,900
Methanol	317,500
Toluene	317,500
Perchloroethylene	255,800
Methylene chloride	213,200
Methyl ethyl ketone	202,300
Trichloroethylene	188,200
1,1,1-Trichloroethane	181,400
Acetone	86,200
Methyl isobutyl ketone	78,000
Chlorobenzene	77,100
Carbon disulfide	77,100
Ethyl acetate	69,900
Ethyl benzene	54,430
Ethyl ether	54,430
n-Butyl alcohol	45,360
1,1,2-Trichloro-1,2,2-tri-fluoroethane	24,040
Isobutanol	18,600
o-Dichlorobenzene	11,800
Cresols & cresylic acid[a]	11,800
Cyclohexanone	9,072
Nitrobenzene	9,072
Trichlorofluoromethane	9,072
Pyridine	907

[a] Consumption amounts for cresol and cresylic acid were combined.

III. SOURCES OF THE WASTE AND TYPICAL DISPOSAL PRACTICES

A. Overall Description of Industry Usage*

The primary solvent-using industries and the quantity of solvents they use annually are as follows:[1]

Paint & Allied Products and Industrial Operations	1,153,500 kkg/yr
Surface Cleaning	610,600 kkg/yr
Pesticide Production	266,700 kkg/yr
Laundry and Dry Cleaning Operations	214,550 kkg/yr
Pharmaceuticals Manufacture	34,740 kkg/yr
Solvent Recovery Operations (Contract and in-house)	499,000 kkg/yr (feedstock)

Table III-1 summarizes the use pattern of the 10 most widely used solvents in the industrial categories listed above. These data illustrate the distinct difference between halogenated and non-halogenated solvents in industrial usage; the chlorinated and other halogenated solvents in Table III-1 are used almost exclusively in the surface cleaning, laundry and dry cleaning categories, whereas the non-halogenated solvents are used primarily in the production categories (paint, pesticides and pharmaceuticals). The ten specific solvents included in this table are believed to account for about 80 percent of all organic solvent usage.[1]

*Large amounts of chemicals listed on Table II-1 are used in such non-solvent applications as chemical feedstock so that the total production of specific solvent chemicals for all applications is often many times larger than the amount used specifically as a solvent.

Table III-1

USE DISTRIBUTION OF THE 10 MOST WIDELY USED ORGANIC SOLVENTS (1)

(All data in units of 10^3 kkg/yr)

	Xylene	Methanol	Toluene	Perchloroethylene	Methylene chloride	Methyl ethyl ketone	Trichloroethylene	1,1,1-Trichloroethane	Acetone	Methyl isobutyl ketone	Total*
Paint & Allied Products	245	300	292	-	-	165	-	-	91	61	1153
Surface Cleaning	-	-	-	48	213	-	181	168	N/A	-	610
Pesticides	245	-	-	-	-	-	-	14	-	8	267
Pharmaceuticals	N/A	1	25	-	N/A	N/A	-	N/A	N/A	8	34
Laundry & Dry Clean.	-	-	-	208	-	-	7	-	-	-	215
TOTAL	490	301	317	256	213	165	188	182	91	77	
Listed Use Level in Reference (1)	490	317	317	256	213	202	188	181	86	78	

*This total is for the 10 primary solvents only and does not include other solvents used in the respective categories.
"NA" indicates that the solvent at issue is probably used, but the amount that is used is not known.

The composition of the spent solvent is dependent on its application, but the spent solvent contains up to 90 percent of the original solvent*. Depending on the recovery techniques, sludges which result from reclamation processes contain from 1 to 50% of the original solvent.** However, because of the economic considerations of the reclaiming process, the solvent content of the sludge is seldom reduced below 10 percent.***

B. Solvent Usage in Paint & Allied Products and Industrial Operations

The category of Paint & Allied Products and Industrial Operations is taken here to include the following solvent-use industrial operations:

- Paint & Allied Products Manufacture
- Roll Coatings
- Paper Coatings
- Dye Manufacture
- Ink Manufacture
- Adhesive Manufacture
- Printing Operations

---

*United States Environmental Protection Agency. 1976. Assessment of Industrial Hazardous Waste Practices Electroplating and Metal Finishing Industries - Job Shops PB-264-349.

** United States Environmental Protection Agency. 1979. Organic Solvent Cleaners-Background Information for Proposed Standards. EPA-45/12-78-045a.

***United States Environmental Protection Agency. 1978. Source Assessment: Reclaiming of Waste Solvents. State of the Art. PB-289-934.

The Paint and Allied Products and Industrial operations category accounts for about half of all organic solvent utilization by industry. The Paint and Allied Products portion of this category is the largest solvent-use subcategory, with Printing Operations being the second largest use subcategory.

For the Paint & Allied Products Industry, there are about 1200 paint manufacturing companies that operate more than 1500 plants. Solvents are important ingredients in formulations for solvent-thinned paints, lacquers, and factory-applied coatings.

Solvent containing wastes arise from the use of solvents to clean equipment, and still bottoms from the recovery of the solvents used in production*. It is estimated[4] that approximately one-third of the solvents used for equipment cleaning are reclaimed, and that 7×10^6 gallons of solvent are disposed of yearly from this source.

The total quantity of solvent-containing wastes from the paint industry is estimated to contain 14,300 kkg/yr of solvents.[4] These are primarily non-halogenated solvents such as xylenes, methanol, acetone, toluene, MEK, etc.

The remaining industrial processes included in this overall category (manufacture of inks, adhesives, dyes, and various types of coatings) utilize organic solvents (primarily non-halogenated) in much the same manner as the paint industry; that is, as an important component of formulations and for

*Additional waste streams from these industrial categories (such as off-specification product and spills of finished product) are expected to be covered by future listings.

equipment cleaning.[1] Printing operations also use solvents for cleaning operations and as dye or pigment carriers. The types of waste generated from these industries should be generally similar to those from the paint industry and include:

Equipment cleaning wastes;

Still bottoms from solvent recovery.

Spent solvents used for equipment cleaning, if not reclaimed, are drummed and landfilled[4]. Most paint companies contract for waste disposal services. Solvent recovery still bottoms are incinerated, landfilled, or injected into deep wells.[5]

C. Surface Cleaning

The Surface Cleaning category consists of two important subcategories:

- Industrial Degreasing
- Repair work
  - Industrial Maintenance and Repair
  - Commercial Service and Repair
  - Consumer-performed Maintenance and Repair

About half of the solvents used in Surface Cleaning Operations, as shown in Table III-1, are used in Industrial Degreasing, (see the Listing Background Document for Solvent Degreasing Operations) with the other half being used in various types of repair work.[1] According to Reference (6), the total number of degreasing operations in the United States for 1976 was over 1,300,000, of which nearly half

were associated with manufacturing operations of various types. The major solvents used are trichloroethylene, 1,1,1-trichloroethane, and chlorofluorocarbons. Most of the solvents used in surface cleaning were halogenated, due to their nonflammable character; this property is especially important in high-temperature degreasing operations.

Neither surface cleaning nor either of its two subcategories can be classified as industry specific, per se; rather these operations are conducted in a number of types of industries (i.e., primary metals, auto repair shops, textile plants).

With respect to the geographic distribution, industrial degreasing is the most concentrated source of solvent wastes from the surface cleaning category since degreasing is associated with manufacturing operations that involve metal finishing (including etching, plating, priming and painting) and electronic components manufacture. The repair work subcategory is much more diffuse in distribution, with both commercial service and repair and consumer-performed maintenance and repair being generally distributed in the same pattern as the population itself.(5)

The major types of wastes from solvent usage in the industrial degreasing subcategory are used (spent) solvent and solvent recovery still bottoms. Wastes from the repair work subcategory would include both halogenated and non-halogenated solvents, and would take the form of relatively

small amounts of used solvent (typically up to a few gallons), plus contaminated rags and other materials.

D. Production of Pesticides, Pharmaceuticals and Other Organic Chemicals

Solvent applications in the production of pesticides, pharmaceuticals and other organic chemicals include usage as a reaction (synthesis) medium, and usage in equipment cleaning.[1] The solvents used are primarily non-halogenated and are typically selected for compatibility with the production process. Toluene is the most widely used solvent in pharmaceuticals manufacture, methanol is used as the reaction solvent in Nylon 66 production, and acetone is used as the solvent in the production of cellulose acetate.[1]

Wastes from solvent usage in these industries take the form of off-specification product material, equipment cleaning wastes, and solvent recovery still bottoms. The destination of all solid wastes is not known, but a large percentage is reclaimed either in-house or by contract recovery operations.[5]

Solvent-containing wastes in these industries are not as geographically distributed as in the other categories discussed herein, but would be expected to follow the general geographical pattern of the organic chemical industry.

E. Laundry and Dry Cleaning

There are about 25,000 retail dry cleaning plants in the United States, 18,000 of which use between 167,000 kkg/yr[7] and 208,000 kkg/yr[1] of perchloroethylene. Of the other 7000 plants, 6000 use about 72,700 kkg/yr of Stoddard's

solvent*, (which is a petroleum distillate), and 1000 use trichlorofluoroethane at a rate of about 900 kkg/yr.[7] The solvents are used to remove dirt, grease and other materials. It is believed that 8 percent[7] of the amount of perchloroethylene used in dry cleaning is disposed of along with still-bottom and cooker residues, so that the amount of perchloroethylene discarded is between 13.4 and 16.6 thousand kkg/yr.

The distribution of dry cleaning plants is uniform with respect to population and is especially associated with population in large urban areas.[7]

Still bottoms from retail dry cleaning consist of about 60 percent solvent and 40 percent oily residue.[7] "Cooker"** residues are 25 percent solvent and 75 percent spent filter (mostly diatomaceous earth).[7]

F. Solvent Recovery Operations

Still bottoms from solvent recovery operations are the remaining waste streams included in this listing. Each of the solvent use industry categories discussed above generates feedstocks for solvent recovery operations. Recovery may be accomplished either in-house or by contract to a recovery firm.

*Stoddard solvent is not specifically included in the waste listings, however, since this solvent has a flash point of of 105°F (i.e., meets the ignitability characteristic), it would also be regulated under the Subtitle C regulatory control system.

**A "cooker" is a type of still in which solvent-contaminated diatomaceous filter powder is heated to drive off the solvent fraction of the total liquid residue contained in the filter powder.

With regard to contract solvent recovery operations, there are between 80 and 100 contract solvent recovery operations in the U.S.[4] The surface cleaning category, and particularly industrial degreasing operations is one of the largest sources of spent solvents sent to contract reclaimers. Other important sources of spent solvents are the paint, ink, and coatings manufacturers and manufacturing processes where very pure solvents are used in organic synthesis (e.g., the organic chemical and pharmaceuticals industries).[8] Some contract reclaiming of solvents is also carried out on solvents from commercial and industrial dry cleaning operations. The geographic distribution, by state, of contract solvent recovery operations is presented in Table III-2.

The volume of feedstock sent to the contract solvent recovery industry is approximately 287,000 kkg/yr; of this volume, about 27 percent are halogenated.[4]

Although there are approximately 100 contract solvent recovery companies, the total number of solvent recovery operations is much larger due to on-site recovery. Of the total number of plants involved in "cleaning operations", 97.89 percent perform on-premises solvent recovery.[8]

Excluding the dry cleaning plants, which are distributed geographically in the same pattern as population, the geographic distribution of all solvent recovery operations is as shown in Table III-3.

Table III-2

GEOGRAPHIC DISTRIBUTION OF CONTRACT SOLVENT RECOVERY OPERATIONS[4]

New Jersey	9
California	9
Ohio	8
Illinois	8
Michigan	7
New York	5
Indiana	4
Massachusetts	3
Rhode Island	2
Maryland	2
South Carolina	2
Georgia	2
Kentucky	2
Tennessee	2
Missouri	2
Texas	2
Connecticut	1
North Carolina	1
Florida	1
Kansas	1
Arizona	1
	74

Table III-3

STATE DISTRIBUTION OF SOLVENT RECLAIMING OPERATIONS[8]

State	Number of Plants	Percent of Total
Alabama	72	1.8
Arizona	37	0.94
Arkansas	39	0.99
California	424	10.
Colorado	44	0.16
Connecticut	60	1.5
Delaware	12	0.35
Florida	141	3.5
Georgia	98	2.4
Idaho	14	0.4
Illinois	224	5.5
Indiana	113	2.8
Iowa	59	1.4
Kansas	49	1.2
Kentucky	70	1.7
Louisiana	83	2.0
Maine	19	0.5
Maryland	83	2.0
Massachusetts	85	2.0
Michigan	178	4.3
Minnesota	76	1.8
Mississippi	45	1.1
Missouri	98	2.3
Montana	15	0.41
Nebraska	30	0.77
Nevada	10	0.29
New Hampshire	13	0.38
New Jersey	153	3.7
New Mexico	21	0.57
New York	372	8.9
North Carolina	105	2.5
North Dakota	13	0.37
Ohio	213	5.1
Oklahoma	56	1.3
Oregon	40	1.1
Pennsylvania	245	5.9
Rhode Island	21	0.57
South Carolina	55	1.3
Tennessee	83	2.0

Table III-3 (cont'd)

State	Number of Plants	Percent of Total
Texas	242	5.8
Utah	21	0.56
Vermont	8	0.24
Virginia	97	2.3
Washington	72	1.7
West Virginia	41	0.99
Wisconsin	90	2.2
Wyoming	6	0.14
Total	4,158	100

Solvent recovery still bottoms (sludges) from contract reclaiming operations amount to about 73,900 kkg/yr, of which between 5 and 50 percent is solvent, or an average solvent content of about 25 percent.[4] About 27 percent of the solvents in still-bottom sludges are halogenated.[4] Thus, the total still bottom waste from contract reclaiming consists of the following components:

18,250 kkg/yr solvent, including 13,320 kkg/yr non-halogenated and 4,930 kkg/yr halogenated;

54,750 kkg/yr nonsolvent contaminant, including oils, waxes, metals and chlorinated and nonchlorinated organics.

The estimate of 25 percent average solvent content, as presented above, can probably be applied to solvent recovery still bottoms for all of the industries discussed herein, since the technology used to reclaim solvents is roughly similar throughout U.S. industry.[8]

Waste Management Practices*

The most widely used management practices for spent

*The Agency has concluded that it does have jurisdiction under Subtitle C of RCRA to regulate waste materials that are used, reused, recycled or reclaimed. Furthermore, it has reasoned that such materials do not become less hazardous to human health or the environment because they are intended to be used, reused, recycled or reclaimed in lieu of being discarded. Therefore, at this time, applicable requirements of Parts 262 through 265 and 122 will apply to the accumulation, storage and transportation of hazardous wastes that are used, reused, recycled or reclaimed. The Agency believes this regulatory coverage is appropriate to the subject wastes. These spent solvents and still bottoms from the recovery of these solvents are hazardous in so far as they are being accumulated or stored in drums or tanks prior to recycling. Therefore, these wastes will be considered as hazardous whether recycled or disposed. However, at the present time, the management of these wastes during recycling operations will not be regulated.

solvents is either recovery/reclamation (either on-site or by contract recovery operations), land disposal (which may include anything from open ground dumping to landfilling), or incineration. For still bottoms, about 80[8] to 86[4] percent of these bottoms from contract solvent reclaimers are incinerated. Still bottom sludges from both contract reclaimers and from solvent recovery operations performed by solvent-using industries, if not incinerated, are either landfilled or injected into deep wells.[8,5] Land disposal of still bottom sludges from contract reclaimers is mostly in landfills that are covered daily.[4] A small amount of sludge is used as asphalt extender (about 0.1 percent).[4]

IV. References to Section III

1. Lee, B. B., G. E. Wilkins and E. M. Nichols, "Organic Solvent Use Study", Final Report, Contract 68-03-2776, Work Effort 1. Prepared for EPA by Radian Corporation, Austin, Texas (October, 1979).

2. Wildholz, M. (ed.), The Merck Index, 9th Edition. Merck and Company, Rahway, New Jersey (1976).

3. Sax, N. I., Dangerous Properties of Industrial Materials, Reinhold Publishing Company, New York, New York. (1963).

4. Scofield, F., J. Levin, G. Beeland and T. Laird, "Assessment of Industrial Hazardous Waste Practices, Paint & Allied Products Industry, Contract Solvent Reclaiming Operations, and Factory Application of Coatings." Prepared for EPA by WAPORA, Inc., Washington, D.C., as Final Report, Contract 68-01-2656.

5. WAPORA, Inc., "Assessment of Industrial Hazardous Waste Practices - Special Machinery Manufacturing Industries" NTIS PB-262-981 (March, 1977).

6. Goodwin, D. R., and D. G. Hawkins, "Organic Solvent Cleaners - Background Information for Proposed Standards". EPA-450/2-78-045a. (October, 1979).

7. International Fabricare Institute, Silver Spring, Maryland. Personal communication with B. Fisher (December, 1979).

8. Monsanto Research Corp., "Source Assessment Reclaiming of Waste Solvents." NTIS PB-282-934 (April, 1978).

IV. HAZARDS POSED BY THE WASTES

A. Hazardous Properties of the Solvents

The major halogenated solvents exhibit organic toxic properties which make them potentially hazardous to human health and the environment. In particular, the two halogenated solvents, perchloroethylene and trichloroethylene, are on CAG's List of Carcinogens. 1,1,1-trichloroethane was determined to be an animal carcinogen. All of the listed halogenated organic solvents, except 1,1,2-trichloro-1,2,2-trifluoroethane, are priority pollutants under Section 307(a) of the C.W.A.

A number of the non-halogenated organic solvents also exhibit toxicity properties. Nitrobenzene has been identified as a suspected carcinogen. These compounds are toxic via one or more of the exposure routes inhalation, ingestion and/or through the skin. Short term human exposure to these compounds can have numerous adverse effects. (For more information on the adverse health effects of these halogenated and non-halogenated solvents, see Health and Environmental Effects, pp. 38-46). In addition, almost all of these non-halogenated solvents also present an ignitability hazard.

In light of the health hazards associated with the waste

solvents--particularly those which are genetically active--and the high concentrations of hazardous solvents contained in the waste, the Agency believes a decision not to list these waste solvents as hazardous would be warranted only if the Administrator were convinced that waste solvents could not migrate and persist, reaching human or environmental receptors (if improperly managed). Such assurance does not appear possible. Not only do all of the waste solvents have significant potential for migration, mobility, and persistence, but many have been implicated in actual damage incidents as well. The Administrator thus believes the hazardous waste listing to be warranted.

In addition, almost all non-halogenated solvents also present an ignitability hazard. According to Table I-2, the eleven most-used non-halogenated organic solvents exhibit flash points of 115°F or below, and are thus well below the limit set for defining an ignitable waste under RCRA §261.21 (flash point below 140°F); therefore, these spent solvents and the still bottoms from the recovery of these solvents are defined as hazardous.

Based on the information in Section III, most of the wastes from usage of organic solvents are landfilled or incinerated. Smaller amounts of these solvent wastes are either placed on open land (or dumps), into storm sewers, and into deep wells. Mismanagement and improper disposal of these

wastes by any of these methods could result in a substantial health and environmental hazard.

Actual damage incidents (see pp. 33-35) involving certain of these listed wastes confirm the dangers of ignitability, and of leaching of waste constituents from landfills to groundwater. Improper waste incineration could also lead to substantial hazard. Thus, inadequate incineration conditions (temperature and residence time) can result in emission of solvents or toxic degradation products. Where a chlorinated solvent is involved, emissions could be more dangerous than the waste itself. For example, phosgene is a partially combusted chlorinated organic (halogenated solvent) which is produced by the decomposition or combustion of chlorinated organics by heat.[1a,1b,1c] Phosgene has been used as a chemical warfare agent and is recognized as extremely toxic.

B. Migratory Potential and Persistence of Halogenated And Non-Halogenated Solvents

The following section of the document discusses the migratory potential mobility, and persistence of the individual waste solvents. In general, all of these solvents appear capable of sufficient migration, mobility and persistence to create a substantial hazard should waste management occur.

Environmental fate data showing the potential for release of the individual halogenated and non-halogenated solvents is

described below and summarized in Table IV-1 and Table IV-2.

Perchloroethylene

Perchloroethylene, if not properly disposed of, may migrate from the waste into the environment via both air and groundwater exposure pathways.

Having been detected in several sites away from the disposal area (i.e., found in varying amounts in school basement air, in basement sumps, and on solid surface samples at the Love Canal site), perchloroethylene has indeed been demonstrated to be quite mobile and persistent.[9]

Methylene Chloride

Methylene chloride, if not properly managed, may migrate from the waste into the environment. It is extremely water-soluble (20,000 mg/l), thus could leach into groundwater and persist there due to its stability.[10] It is also very volatile (350 mm Hg at 20°C) and could present an air pollution problem because of its high evaporation rate (1.8 times the rate of ether) and its stability in air and light.[10]

Trichloroethylene

Trichloroethylene, if not properly managed, may migrate from the disposal site into the environment via air and groundwater pathways. First, it is volatile (77 mg Hg at 20°C, 141.04 mm Hg at 40°C[8]), so it may be released from the waste into the air; it has been detected in school and basement air at the Love Canal site.[9]

TABLE IV-1

Halogenated Solvents*

Compound	Vapor Pressure (mm Hg)	Solubility in Water (mg/l)	Octanol/Water Partition Coefficient
Perchloroethylene	19 at 25°C[5]	150 at 25°[5]	339[2]
Methylene chloride	350 at 20°C	20,000 at 25°[5]	20
Trichloroethylene	77 at 25°C[5]	1,000 at 20°[5]	195[2]
1,1,1-Trichloroethane	100 at 20°C	950 at 25°C	158
Chlorobenzene	10 at 22°C	488 at 25°C	690
1,1,2-Trichloro-1,2,2-Trifluoroethane	270 at 20°C	10 at 25°C	100
1,2-Dichlorobenzene	1.56 at 25°C[5]	145 at 25°C	2400[2]
Trichlorofluoromethane	687 at 20°C[11]	1,100 at 25°[11]	339[2]

* Table compiled from data given in "Physical Chemical Properties of Hazardous Waste Constituents" (U.S. EPA, 1980) unless otherwise specified by superscript.

Table IV-2

Non-Halogenated Solvents*

Compound	Vapor Pressure (mm Hg)	Solubility in Water	Octanol/Water Partition Coefficient
Methanol	100 at 21.2°C	Miscible	5
Toluene	28.4 at 25°C	470 at 25°C	117
Methyl ethyl ketone	100 at 25°C	1000,000 at 25°C	1
Methyl isobutyl ketone	16 at 20°C	19,000 at 25°C	1
Carbon disulfide	260 at 20°C	2,200 at 25°C	100
Isobutanol	10 at 25°C	95,000 at 18°C	8
Cresols and cresylic	0.24 at 25°C[11]	31,000 at 40°C[11]	110[2]
acid ortho (1,2)			
meta (1,3)	0.04 at 20°C[11]	23,500 at 20°C[11]	102[2]
para (1,4)	0.11 at 25°C[11]	24,000 at 40°C[11]	98[2]
Nitrobenzene	1 at 44.4°C	1,900 at 25°C	62
Pyridine	20 at 25°C	Miscible	5

*Table compiled from data given in "Physical Chemical Properties of Hazardous Waste Constituents" (U.S. EPA, 1980) unless otherwise specified by superscript.

It is also relatively water-soluble (1,000 mg/l), so that it may leach into groundwaters if not adequately contained. Trichloroethylene has been detected in a number of wells and residue ponds near groundwater contaminated by a chemical company dump, as well as in basement sumps at the Love Canal site, confirming its miblity and persistence in groundwater.[9]

1,1,1-Trichloroethane

1,1,1-Trichloroethane is a highly mobile compound, and if not properly managed, could migrate from wastes into the environment. It is highly volatile (100 mm Hg at 20; approximately 210 mm Hg at 40°C), so that it may be released from waste sites into the air. Once in the air, it will only decompose at elevated temperatures. Because of this, and the fact that 1,1,1-trichloroethane is reactive to sunlight at high altitudes, while stable at low altitudes, it may create air-pollution problems if disposed of inadequately.[10] It has been detected in school and basement air at the Love Canal site.[9]

1,1,1-trichloroethane is also quite water-soluble and mobile, particularly where soils are low inorganic content.[10] It is also relatively persistent in groundwater where it reacts slowly, releasing hydrochloric acid.[10]

Chlorobenzene

Chlorobenzene may migrate from the disposal site into the environment if disposed of inadequately. It is soluble in water (488 mg/l) such that it may leach into groundwater where it would persist since it is unamenable to hydrolyza-

tion.[10] Chlorobenzene is also volatile so it could be released from wastes into the air.[10] It has been detected in school and basement air, basement sumps, and solid surface samples at the Love Canal site.[9] Because it does not biodegrade well, chlorobenzene is very persistent in the environment.[10]

1,1,2-Trichloro-1,2,2-trifluoroethane/Trichlorofluoromethane

These two solvents, if improperly managed, can migrate from the disposal site into the environment. The are extremely volatile (1,1,2-Trichloro-1,2,2-trifluoroethane, 270 mm Hg at 20°C, to over 500 mm Hg at 40°C;[10] trichlorfluoromethane, 687 mm Hg at 20°C[7]) and very persistent in the environment due to resistance to biodegradation, photodecomposition, and chemical degradation.[7] Because of their high volatility, after release at the surface of the earth, these solvents rise to the stratosphere where they may release chlorine atoms and deplete the ozone. This can lead to various adverse health and environmental effects including an increase in the amount of ultraviolet radiation reaching the earth, as well as possible changes in the earth's climate induced by the "greenhouse effect".[3,4]

o - Dichlorobenzene

o - Dichlorobenzene, if disposed of improperly, may migrate from the disposal site into the environment by both air and water pathways. Having been detected at several sites away from the disposal area (found in school and basement air, in basement sumps, and in solid surface samples at

the Love Canal site), o-dichlorobenzene have been demonstrated to be mobile and persistent.[9]

o-Dichlorobenzenes has a very high octanol/water partition coefficient of 2,400, indicating a high bioaccumulation potential. Thus, migration, even in small concentrations, could lead to a chronic toxicity hazard (Appendix A).

Methanol

Methanol, if improperly managed, can migrate from the disposal site into the environment. It is miscible (1,000,000 mg/l) and mobile in soils, so that it may leach into groundwater[10]. While biodegradable, it would persist in the abiotic environment of most aquifers.[10]

Methanol is also highly volatile (100 mm Hg at 21.2°C) so it may migrate via an air exposure pathway. Since, it is eliminated slowly from the body, methanol could bioaccumulate causing numerous adverse health effects from prolonged and/or repeated exposure.[6]

Toluene

Toluene, if improperly managed, may migrate from the the disposal site into the environment. It is relatively volatile (vapor pressure 28 mm Hg at 20°C) and so can migrate via and air pathway. It is photochemically degraded, but it can re-enter the hydrosphere in rain.[12] Toluene is also capable of migration via a groundwater pathway since it is relatively soluble, and persistent in abiotic environments (such as most aquifers).

Toluene has been detected in school and basement air, basement sumps, and solid surface samples at the Love Canal site, demonstrating its mobility and persistence in both air and groundwater.[9]

Methyl Ethyl Ketone

Methyl ethyl ketone, if disposed of inadequately may migrate from the disposal site into the environment. It is very soluble in water (100,000 mg/l), such that it could leach into groundwaters. It is also very volatile (185.4 mm Hg at 40°C[8]), and could present an air pollution problem if improperly contained.

Methyl ethyl ketone has been detected at several sites near groundwater contaminated by an old chemical company dump, as well as in school and basement air at the Love Canal site, demonstrating both its mobility and persistence.[9]

Methyl Isobutyl Ketone

Methyl isobutyl ketone, if improperly managed, may migrate from the disposal site into the environment through water and air pathways. It is very soluble in water (19,000 mg/l), and mobile in most soils, so that it could leach into the ground water and persist due to its nonreactivity with water.[10]

It is also volatile (vapor pressure of 16 mm Hg at 20°C and known toxicity), so it could pose an air pollution problem if improperly contained. Methyl isobutyl ketone biodegrades slowly,[10] and is demonstrated to be mobile as well as persistent, having

been detected at the Love Canal site.[9]

Carbon Disulfide

Carbon disulfide, if improperly managed, may migrate from the disposal site into the environment. It is extremely volatile (260 mm Hg at 20°C) and althouth subject to photolysis, could present an air pollution problem if inadequately contained. It is also quite soluble in water (2200 mg/l), and is not known to attenuate in soils; therefore it could leach into the groundwater, where, being unamenable to hydrolysis, it is likely to persist for an extended time period.[10]

Isobutanol

Isobutanol, if improperly managed, may migrate from the disposal site into the environment. It is extremely water-soluble (95,000 mg/l); thus, if inadequately contained, it may contaminate surface water and adversely affect its self-purification ability.[10] In addition, isobutanol could leach into groundwater if disposal is inadequate.

Cresols (and cresylic acid)

Cresols, if improperly managed, may migrate from the disposal site into the environment. Cresols are highly soluble (23,500 to 31,000 mg/l) and are not known to attenuate significantly in soils; thus, they could leach into groundwater if disposal is inadequate. Once in water, cresols rapidly form chlorinated compounds, which are more environmentally objectionable.[10] Cresols are not known to hydrolyze and so would be likely to persist in groundwater.[10]

Nitrobenzene

Nitrobenzene, if disposed of inadequately, may migrate from the disposal site into the environment. It is water-soluble (1900 mg/l) and would be mobile where soil organic content is low,[10] and thus could leach into groundwater if disposal is not adequate. It is likely to be highly persistent in groundwater since it is not amenable to hydrolization and does not biodegrade well.[10]

Pyridine

Pyridine, if disposed of inadequately, may migrate from the disposal site. Because pyridine is miscible with water, it has high migratory potential. It would be mobile as well, unless soil has high clay content.[10] Pyridene also would be likely to persist in the abiotic environment of most groundwaters.

C. Mismanagement of Wastes Destined for Land Disposal

Documented damage incidents resulting from the mismanagement of these wastes from usage of organic solvents are presented below:

Damage Resulting from Ignitability of Wastes

(1) A load of used pesticide containers delivered to a disposal site in Fresno County, California, also contained several drums of an acetone-methanol solvent mixture. When the load was compacted by a bulldozer, the waste ignited, engulfing the bulldozer in flames and dispersed pesticide wastes.(13)

(2) A large number of drums containing organic solvent wastes were deposited in a landfill at Contra Costa, California. In the immediate area were leaking containers of concentrated mineral acids and several bags of beryllium wastes in dust form. The operators failed to cover the wastes at the end of the day. The combination of wastes ignited during the night, starting a large chemical fire which possible dispersed hazardous beryllium oxide.(13)

(3) Two serious fires at the Merl-Milam Landfill, St. Clare County, Illinois (August, 1973 and April, 1974) were attributed to the presence of solvent wastes from plastics manufacture.(13)

Contamination of Groundwaters

(1) In two separate instances in Michigan, trichloroethylene was dumped on the ground and later found to have migrated into groundwater. In one case, trichloroethylene dumped at a rate of 1000 gallons per year over a four-year period was detected in residential wells as much as 1100 feet from the site of dumping. Concentrations ranged as high as 28 ppm.(13)

In the other case, the Air Force at a base near Oscoda, Michigan, had problems with contaminated groundwater because of a leaking tank used to hold trichloroethylene. The problem was compounded when a waste hauler apparently mismanaged the trichloroethylene that was hauled from the leaking tank, and groundwater contamination up to four miles away was

considered one of the results.[11]

(2) A sump overflow in 1971 at the Superior Tube Company allowed trichloroethylene wastes to leak into a cooling pond. Seepage from this pond was found to contaminate a private well 75 yards distant and a company well at the site.[13]

(3) Open dumping of wastes, including solvent wastes, from a chemical packing plant by U.S. Aviex Company resulted in entry of organic solvents into the water table and contamination of several nearby water wells in 1973. One family reported illness resulting from use of the contaminated well water.[13]

The damage incidents presented above illustrate the following potential hazards associated with wastes from usage of organic solvents:

(1) Ignitability hazard during mismanagement;

(2) Potential toxicity hazard to humans via groundwater exposure pathways.

IV. References to Section IV (A, B and C)

1. Jacobs, S. 1957. The handbook of solvents. D. Van Nostrand Company, Inc., New York.

1a. Combustion Formulation and Emission of Traces Species", John B. Edwards, Ann Arbor Science, 1977.

1b. NIOSH Criteria for a Recommended Standard; Occupational Exposure to Phosgene, HEW, PHS, CDC, NIOSH, 1976.

1c. Chemical and Process Technology Encyclopedia, McGraw Hill, 1974.

2. Leo, A., C. Hansch, and D. Elkins. 1971 (Updated 1977). Partition coefficients and their uses. Chem. Rev. 71: 525-616.

3. National Academy of Sciences, National Research Council. 1976. Halocarbons: Environmental Effects of Chloromethane Release.

4. National Academy of Sciences, National Research Council. 1979. Stratospheric Ozone Depletion by Halocarbons: Chemistry and Transport.

5. Patty, F. A., Editor. 1963. Industrial hygiene and toxicology. Interscience Publishers, New York.

6. Sax, N. I. Dangerous Properties of Industrial Material, Fifth Edition. Van Nostrand Reinhold Company, New York, 1979.

7. U.S. EPA. 1975. Environmental Hazard Assessment of One- and Two-Carbon Fluorocarbons. EPA-560/2-75-003.

8. U.S. EPA. 1980. Evaluation of treatment, storage, and disposal techniques for ignitable, volatile, and reactive wastes. Contract Number 68-01-5160. (Draft final report)

9. "Love Canal Public Health Bomb", A Special Report to the Governor and Legislature, New York State Department of Health (1978).

10. U.S. EPA. 1980 Physical Chemical Properties of Hazardous Waste Constituents. (Prepared by Southeast Environmental Research Laboratory; Jim Falco, Project Officer).

11. Verschueren, K. 1977. Handbook of Environmental Data on Organic Chemicals. Van Nostrand Reinhold Company, New York.

12. Walker, P. 1976, Air pollution assessment of toluene. MTR-7215. Mitre Corp. McLean, Virginia.

13. U.S. EPA Office of Solid Waste Division, Hazardous Waste Incidents, Open File, 1978.

D. Health and Environmental Effects*

Perchloroethylene (Tetrachloroethylene)

Perchloroethylene (PCE) was reported carcinogenic to mice.[16] It has also been identified by the Agency as a chemical which has demonstrated substantial evidence of being carcinogenic. PCE is chronically toxic to rats and mice, causing kidney and liver damage;[10,16,21] and to humans, causing impaired liver function.[2] Subjective central nervous system complaints were noted in workers occupationally exposed to PCE.[14] PCE exposure is reported to cause alcohol intolerance to humans. PCE is also reported to be acutely toxic in varying degrees to several fresh- and salt-water organisms, and chronically toxic to some saltwater organisms.[28,32] (Appendix A)

PCE is a priority pollutant under Section 307(a) of the Clean Water Act.

Methylene Chloride (Dichloromethane)

Methylene chloride was reported as being mutagenic to a bacterial strain, S. typhimurium.[24] It was also reported to be feto- or embryo-toxic to rats and mice.[23] Female workers had gynecological problems after prolonged exposure to methylene chloride.[36] Methylene chloride is acutely toxic, causing central nervous system depression and elevation of carboxy-hemoglobin levels.[18] Severe contamination of food or water can cause irreversible renal and hepatic injury.[30] Acute toxicity values range from 147,000 to 310,000 mg/l for aquatic

*Ethyl benzene, which is only being listed for its ignitability hazard, is also considered a priority pollutant under Section 307(a) of the Clean Water Act.

organisms (Appendix A)

Trichloroethylene

Trichloroethylene (TCE) has been reported to be carcinogenic to mice.[15] It has been identified by the Agency as a chemical which has demonstrated substantial evidence of being carcinogenic.[38] Industrial exposure to TCE caused some cases of central nervous system disturbances (headaches, insomnia, tremors) as well as peripheral nervous system impairment (neuritis, temporary loss of tactile sense, finger paralysis).[1,13] Rare cases of hepatic damage have been reported following repeated abuse of TCE.[6]

TCE was also found to be acutely toxic in varying degrees to several freshwater organisms;[28] there was a 50% decrease noted in ^{14}C uptake by a salt-water algae at a concentration of 8,000 mg/l.[20](Appendix A)

1,1,1-Trichloroethane (Methyl Chloroform)

1,1,1-Trichloroethane has been determined to be carcinogenic to all tested animals.[17] It was found to cause several central nervous system disorders (changes in rection time, perceptual speed, manual dexterity, and equilibrium) in humans, and, in animal studies,[34] was found to produce toxic effects in the central nervous system, cardiovascular system, pulmonary system, and to induce liver and kidney damage in tested animals. 1,1,1-Trichloroethane was reported acutely toxic in varying degrees to some freshwater fish and some marine organisms.[28,34](Appendix A)

1,1,1-Trichloroethane is a priority pollutant under Section 307(a) of the Clean Water Act.

Chlorobenzene (Monochlorobenzene, MCB)

Chlorobenzene has been found to produce histopathological changes in lungs, liver, and kidneys following its inhalation by rats, rabbits and guinea pigs.[7] Oral administration of monochlorobenzene to rats was reported to cause growth retardation in males.[11] MCB also appears to increase the activity of some microsomal enzyme systems, which enhances the metabolism of many drugs, pesticides, and other xenobiotics.[29] (Appendix A)

MCB was reported to be toxic to varying degrees to several fresh- and salt-water organisms, including algae.[28]

MCB is a priority pollutant under Section 307(a) of the Clean Water Act.

1,1,2 Trichloro-1,2,2 trifluoroethane (Trifluorotri-chloroethane)

The Agency's primary concern in listing this solvent is the air pollution hazard resulting from its release at the surface of the earth. This can have many adverse health and environmental effects including skin cancer resulting from the depletion of the ozone.[39,40]

1,2-Dichlorobenzene (ortho isomer)

Ortho 1,2-Dichlorobenzene exhibits moderate toxicity via inhalation and oral routes. The major toxicological effect is injury to the liver and kidneys; it can also act as a central nervous system depressant after short periods of exposure.[19,22] (Appendix A)

1,2-dichlorobenzene is designated a priority pollutant under section 307(a) of the Clean Water Act.

Trichlorofluoromethane

The Agency's primary concern in listing this solvent is the air pollution hazard resulting from its release at the surface of the earth. This can have many adverse health and environmental effects including skin cancer resulting from the depletion of the ozone.[39,40] However, additional adverse health effects have been found and are presented below.

Exposure of rabbits to trichlorofluoromethane was reported to cause cardiac arrhythmias in all rabbits exposed.[26] It induced cardiac arrhythmias, sensitized the heart to epinephrine-induced arrhythmias, and caused tachycardia (increased heart rate) myocardial depression, and hypertension in the monkey, dog, rat and mouse.[26]

Trichlorofluoromethane is a priority pollutant under Section 307(a) of the Clean Water Act.

Methanol (Methyl Alcohol)

The main toxic effects resulting from methanol exposure to humans are exerted upon the nervous system, particularly the optic nerves and the retinae. Upon ingestion and/or inhalation followed by absorption from the gastrointestinal and respiratory tracts, methanol is slowly elimated. Because of this, methanol should be regarded as a cumulative poison. Though single exposures to fumes may cause no harmful effect, daily exposure may result in accumulation of methanol to

cause illness including intoxication, headache, weakness, apathy and convulsions. Severe exposures may cause dizziness, unconsciousness, cardiac depression, permanent blindness and eventual death.[5,22] (Appendix A)

Toluene

Toluene is a toxic chemical absorbed into the body by inhalation, ingestine, and through the skin. The acute toxic effect in humans is excessive depression of the central nervous system,[45] and this occurs at low concentrations [200 ppm].[46] Chronic occupational exposure to toluene has led to the development of neuro-muscular disorders. Occupational exposure to female workers to toluene reported to cause several reproductive problems, both to the woman and the offspring.[25]

Since toluene is metabolized in the body by a protective enzyme system which is also involved in the elimination of other toxins, it appears that over-loading the metabolic pathways with toluene will greatly reduce the clearance of other more toxic chemicals. Additionally, the high affinity of toluene for fatty tissue can assist in the absorption of other toxic chemicals into the body. Thus, synergistic effects of toluene on the toxicities of other contaminants may render the waste stream more hazardous (Appendix A).

Toluene is a priority pollutant under Section 307(a) of the Clean Water Act.

Methyl Ethyl Ketone

Methyl ethyl ketone is a highly volatile liquid whose chief effect is narcosis; it is also a strong irritant of the mucous membranes of the eyes and nose. Additionally, lethal doses in animals (LC_{50} - 700 ppm) has caused marked congestion of the internal organs and slight congestion of the brains. Lungs also showed emphysema (Appendix A).

Methyl Isobutyl Ketone

In a study[41] reported on 19 employees who worked with methyl isobutyl ketone for 20-30 minutes daily during an 8-hour shift, Linari et. al. concluded that methyl isobuty ketone irritates the conjuctive and respiratory tract and produces disturbances of the gastrointestinal tract and central nervous system. Other reported effects due to exposure include weakness, loss of appetite, headache, eye irritation, stomach ache, nausea, vomitting, and sore throat.

Further, Linari et. al.[41] found skin lesions in 3 of the 19 workers exposed to methyl isobutyl ketone at 80-500 ppm for 20-30 minutes daily. Evidence also suggests that ketones in liquid form may cause dermatitis (Appendix A).

All of the ketones except methyl isomyl ketone have been reported to produce irritation of the eye, nose, or throat.[42]

Carbon Disulfide

Short term human exposure to low atmospheric concentrations of carbon disulfide may result in central nervous system depression, headaches, breathing difficulty and gastrointesti-

nal disturbances. Exposure to short term but high atmospheric concentrations can lead to narcosis and death. The symptoms of humans subjected to repeated exposure to high concentrations or prolonged exposure to low concentrations include insomnia, fatigue, loss of memory, headache, melancholia, vertigo and loss of appetite. Visual impairment, loss of reflexes, and lung irritation has been reported.[19,22] Rats and mice exposed 8 hours per day for 20 weeks to an average concentration of 37 ppm carbon disulfide showed evidence of toxic effects.[19] (Appendix A)

Isobutanol

Rats receiving isobutyl alcohol, either orally or subcutaneously, one to two times a week for 495 to 643 days showed liver carcinomas and sarcomas, spleen sarcomas and myeloid leukemia.[43]

Ingestion of one molar solution of isobutyl alcohol in water by rats for 4 months did not produce any inflammatory reaction of the liver. However, rats ingesting a two molar solution for two months developed Mallory's alcoholic hyaline bodies in the liver and were observed to have decreases in fat, glycogen, and RNA in the liver.[43]

Acute exposure to isobutyl alcohol causes narcotic effects, and irritation to the eyes and throat in humans exposed to 100 ppm for repeated 8 hour periods. Formation of facuoles in the superficial layers of the cornea and loss of appetite and weight were reported among workers subjected to an undetermined but apparently high concentration, of isobutyl alcohol.[44] (Appendix A)

Pyridine

Pyridines exhibit moderate toxicity when introduced into the human body through oral, dermal, and inhalation routes.[22] Liver and kidney damage has been produced in animals and man after oral administration.[3] In small doses, conjunctivitis, dizziness, vomiting, diarrhia and jaundice may appear; tremors and ataxia, irritation of the respiratory tract with asthmatic breathing, paralysis of eye muscles, vocal cords and bladder also have been reported.[22]

Adverse taste in fish (carp, rudd) has been reported at 5 ppm. Pyridine causes inhibition of cell multiplication in algae and bacteria at 28 and 340 ppm respectively.[35] (Appendix A)

Nitrobenzene

Nitrobenzene is a suspected carcinogen.[4]

When administered to pregnant rats, it caused abnormalities in some of the fetuses examined.[8] Changes were observed in the chorionic and placental tissues of pregnant workers exposed to nitrobenzene,[4] and menstrual disturbances after chronic exposure have been reported. Chronic exposure to nitrobenzene has been found to cause a variety of blood-variety disorders.

Nitrobenzene is actually toxic in varying degrees to several salt- and fresh-water organisms.[31] (Appendix A)

Nitrobenzene is a priority pollutant under Section 307(a) of the Clean Water Act.

Cresols (Cresylic Acid)

Cresol exhibits moderate toxicity via oral and inhalation routes. Acute exposure can lead to absorption causing kidney and liver damage as well as central nervous system disturbances. Other symptoms include gastroenteric problems, severe depression, collapse and even death. In addition, exposure to cresol can cause severe skin burns and dermatitis.[19,22] (Appendix A)

VII. References to Section IV, D

1. Bardodej, Z., and J. Vyskoch. 1956. The Problem of Trichloroethylene in Occcupational Medicine. AMA Arch. Ind. Health 13:581.

2. Coler, H.R., and H. R. Rossmiller. 1953. Tetrachloroethylene Exposure in a Small Industry. Ind. Hyg. Occup. Med. 8:227.

3. Deichmann, W.R. Toxicology of Drugs and Chemicals. Academic Press Inc. New York, 1969.

4. Dorigan, J. and J. Hushon. 1976. Air Pollution Assessment of Nitrobenzene. U.S. Environmental Protection Agency.

5. Gosselin, Robert E. et. al., Clinical Toxicology of Commercial Products, Fourth Edition, The Williams and Wilkin Company, Baltimore, 1976.

6. Huff, J.E., 1971. New Evidence on the Old Problems of Trichloroethylene. Ind. Med. 40:25.

7. Irish, D.D. 1963. Halogenated Hydrocarbons: II. Cyclic. In Industrial Hygiene and Toxicology, Volume II, Second Edition (F. A. Patty, Editor), Interscience, New York p. 1333.

8. Kazanina, S.S. 1968. Morphology and Histochemistry of Hemochorial Placentas of White Rats During Poisoning of the Maternal Organisms by Nitrobenzene. Bull. Exp. Biol. Med. (USSR) 65:93.

9. Kirk-Othmer., Encyclopedia of Chemical Technology, Third Edition, Volume 9. John Wiley and Sons, New York. 1980.

10. Klaassen, C.D., and G.L. Plaa 1967. Relative Effects of Chlorinated Hydrocarbons on Liver and Kidney Function in Dogs. Toxicol. Appl. Pharmacol.

11. Knapp, W. K., Jr., et al. 1971. Subacute Oral Toxicity of Monochlorobenzene in Dogs and Rats. Toxicol. Appl. Pharmacol. 19:393.

12. Matsushita, T., et al. Hematological and Neuro-muscular Response of Workers Exposed to Low Concentrations of Toluene Vapor. Ind. Health 13:115.

13. McBirney, B.S. 1954. Trichloroethylene and Dichloroethylene Poisoning. AMA Arch. Ind. Hyg. 10:130.

14. Medek, V. and J. Kavarik. 1973. The Effects of Perchloroethylene on the Health of Workers. Pracovni Lekarstvi. 25:339.

15. National Cancer Institute. 1976. Carcinogenesis Bioassay of Trichloroethylene. CAS No. 79-01-6, NCI-CG-TR-2.

16. National Cancer Institute. 1977. Bioassay of Tetrachloroethylene for Possible Carcinogenicity. CAS No. 127-18-4, NCI-CG-TR-13, DHEW Publication No. (NIH) 77-813.

17. National Cancer Institute. 1977. Bioassay of 1,1,1-Trichloroethane for Possible Carcinogenicity. Carcinog. Tech. Rep. Ser. NCI-CG-TR-3.

18. National Institute for Occupational Safety and Health. 1976a. Criteria for a Recommended Standard: Occupational Exposure to Methylene Chloride. HEW Pub. No. 76-138. U.S. DHEW., Cincinnati, Ohio.

19. Patty, Frank A., Editor. Industrial Hygiene and Toxicology, Volume II, Interscience Publishers, New York. 1963.

20. Pearson, C., and G. McConnell. 1975. Chlorinated C_1 and C_2 Hydrocarbons in the Marine Environment. Proc. R. Soc., London B. 189:302.

21. Rowe, V. K., et al., 1952. Vapor Toxicity of Tetrachloroethylene for Laboratory Animal and Human Subjects. AMA. Arch. Ind. Hyg. Occup. Med. 5:566.

22. Sax, N. Irving. Dangerous Properties of Industrial Materials. Fifth Edition, Van Nostrand Reinhold Company, New York. 1979.

23. Schwetz, B. A., et al. 1975. The Effects of Maternally Inhaled Trichloroethylene, Perchloroethylene, Methyl Chloroform, and Methylene Chloride on Embryonal and Fetal Development in Mice and Rats. Toxicol. Appl. Pharmacol. 32:84.

24. Simmon, V. F., et al., 1977. Mutagenic Activity of Chemicals Identified in Drinking Water. S. Scott, et al., Editors: In Progress in Genetic Toxicology.

25. Syrovadko, O. N. 1977. Working Conditions and Health Status of Women Handling Organosiliceous Varnishes Containing Toluene. Gig. Tr. Prof. Zabol. 12:15.

26. Taylor, O.C., 1974. Univ. of California, Riverside. Unpublished Data. (as cited in U.S. EPA, 1976a.)

27. U.S. EPA. 1976a. Environmental Hazard Assessment Report: Major One- and Two-Carbon Saturated Fluorocarbons, Review of Data. EPA-560/8-76-003.

28. U.S. EPA. 1978. In-depth Studies on Health and Environmental Impacts of Selected Water Pollutants. Contract No. 68-01-4646.

29. U.S. EPA. 1979. Chlorinated Benzenes: Ambient Water Quality Criteria (Draft).

30. U.S. EPA. 1979. Halomethanes: Ambient Water Quality Criteria (Draft).

31. U.S. EPA. 1979. Nitrobenzenes: Ambient Water Quality Criteria (Draft).

32. U.S. EPA. 1979. Tetrachloroethylene: Ambient Water Quality Criteria (Draft).

33. U.S. EPA. 1979. Toluene: Ambient Water Quality Criteria (Draft).

34. U.S. EPA. 1979. Chlorinated Ethanes: Ambient Water Quality Criteria (Draft).

35. Verchuerer K., Handbook of Environmental Data on Organic Chemicals. Van Nostrand Reinhold Company. 1977.

36. Vozovaya. 1974.

37. Wolf, M. A., et al. 1956. Toxicological Studies of Certain Alkylated Benzenes and Benzene, Arch. Ind. Health 14:387.

38. EPA Carcinogen Assessment Group's List of Carcinogens, April 22, 1980.

39. National Academy of Sciences, National Research Council. 1976. Halocarbons: Environmental Effects of Chloromethane Release.

40. National Academy of Sciences, National Research Council. 1979. Stratospheric Ozone Depletion by Halocarbons: Chemistry and Transport.

41. Linari, F., Perrelu, G., Varese, D.: [Chemical Observations and Blood Chemistry Tests Among Workers Exposed to the Effect of a Complex Ketone--Methyl-Isobutyl Ketone.] Arch. Sci. Med., 1964, pp. 226-237 (Ita).

42. Specht, H., Miller, J. W., Valaer, P. J., Sayers R. R.: Acute Response of Guinea Pigs to the Inhalation of Ketone Vapors, NIH Bulletin No. 76. Federal Security Agency. Public Health Service, National Institute of Health, pp. 66.

43. Gibel, et al., Exp. Chir. Forsch. 1:235, 1974.

44. Smith et al., Arch. Ind. Hyg. Occup. Med. 10:61, 1954.

45. U.S. EPA. 1979. Toluene Ambient Water Quality Criteria.

46. NIOSH (1978) Registry of Toxic Effects of Chemical Substances. Toluene.

- One commenter objected to the listing "Waste non-halogenated solvent (such as methanol, acetone, isopropyl alcohol, polyvinyl alcohol, stoddard solvent and methyl ethyl ketone) and solvent sludges from cleaning, compounding milling and other processes."* The commenter argued that without indicating the concentration or quantity of the solvent in the waste, the Agency would be listing wastes as hazardous even if the solvent were present in small concentrations and quantities.

  In the listing promulgated today for waste solvents, the Agency is only listing those spent solvents or still bottoms from the recovery of these solvents which would contain substantial quantities and concentrations of the solvent. For example, spent solvents can contain up to 90% of the original solvent while the still bottoms may contain up to 50% of the spent solvent.

- A number of commenters objected to the listing of polyvinyl alcohol (PVA) as a solvent. These commenters argued that PVA is not a solvent but is a solid and can only be used as a solute. Therefore, they recommended that PVA be removed from the list.

*This specific listing will not be included in the final regulation; however, it will be covered under the generic listing "The Spent non-halogenated solvents...."

The Agency agrees with the commenters and therefore, has removed PVA from the listing.

- A number of commenters objected to the listing of waste halogenated/non-halogenated solvents. They felt that the listing was too vague and ambiguous.

  In the listings promulgated today, the Agency has specifically listed only those solvents for which data or information are available which indicates a present or potential hazard could be posed to human health and the environment if improperly managed. Therefore, the listing description promulgated today should respond to the commenters' objection.

Electroplating and Metal Finishing Operations

Wastewater Treatment Sludge from Electroplating Operations (T)

Summary of Basis for Listing

Wastewater treatment sludge from electroplating operations are generated by a number of industry categories located nationwide. This waste contains a variety of heavy metals such as chromium, cadmium, nickel as well as cyanide. The Administrator has determined that waste from these processes may be solid wastes which may pose a substantial present or potential hazard to human health and the environment when improperly transported, treated, stored, disposed of or otherwise managed, and therefore should be subject to appropriate management requirements under Subtitle C of RCRA. This conclusion is based on the following considerations:

1. Wastewater treatment sludge from electroplating operations contain significant concentrations of the toxic heavy metals chromium, cadmium, and nickel, and highly toxic cyanide.

2. Leaching tests using the extraction procedure (used in the extraction procedure toxicity characteristic) have shown that these metals leach out in significant concentrations, with some samples failing the extraction procedure toxicity characteristic. Therefore, the possibility of groundwater contamination via leaching will exist if these waste materials are improperly disposed.

3. A large quantity of this waste is generated annually (specific quantities have not been calculated at this time) and amounts are expected to increase substantially when the pretreatment standards for these sources become effective. Damage incidents (i.e., contaminated wells, destruction of animal life, etc.) that are attributable to the improper disposal of wastewater treatment sludge from electroplating operations have been reported, thus

indicating that the wastes may be mismanaged in actual practice, and are capable of causing substantial harm if mismanagement occurs.

Sources of the Waste and Typical Disposal Practices

Industry Profile

The electroplating industry consists of both job shops and captive platers. Job shops are small, independent operations performing electroplating on a contract basis while captive facilities are part of an integrated manufacturing firm (i.e., electroplating operations carried-out in an automobile manufacturing facility, aircraft manufacturing facility, etc.). Of the approximately 10,000 electroplating facilities in the United States, it is estimated that 3,000 are job shops and 6,100 are captive shops including 400 printed circuit board manufacturers. Approximately 7 percent of the job shops and 42 percent of the captive shops discharge directly to the waters of the United States.(1)

Electroplating Process Description

Electroplating, as defined in this document, includes a wide range of production processes which utilize a large number of raw materials. Production processes include common and precious metals, electroplating, anodizing, chemical conversion coating (i.e., coloring, chromating, phosphating and immersion plating), electroless plating, chemical etching and milling and printed circuit board manufacturing (5).* The

*Among the industries included in this listing are segments of the printing and publishing category associated with rotogravure and metalic plate manufacture, continuous electroplating processes of the iron and steel industry and chromic acid waste treatment from magnesium carbon battery production.

primary purpose of electroplating operations is to apply a surface coating, typically by electrode decomposition, to provide protection against corrosion, to increase wear or erosion resistance, or for decorative purposes. The operation itself involves immersing the article to be coated/plated into a bath consisting of acids, bases, salts, etc. A plating line is a series of unit operations conducted in sequence in which one or more coatings are applied or a basis material is removed. Figure 1 illustrates a standard electroplating process. (For a more detailed discussion of the electroplating process, see the Development Document for Existing Source Pretreatment Standards for the Electroplating Point Source Category, August 1979 (5).)

The metals used in electroplating operation (both common and precious metal plating) include cadmium, lead, chromium, copper, nickel, zinc, gold and silver. Cyanides are also extensively used in plating solutions and in some stripping and cleaning solutions. Electroless plating often uses copper, nickel and tin complexed with cyanide. Etching solutions are commonly made up of strong acids or bases with spent etchants containing high concentrations of spent metal. The solutions include ferric chloride, nitric acid, ammonium persulfate, chromic acid, cupric chloride and hydrochloric acid. Anodizing is usually performed on aluminum parts using solutions of sulfuric or chromic acid often followed by a nickel acetate seal. Chemical conversion coating most commonly involves the use of chromate or phosphate-containing baths. A number of

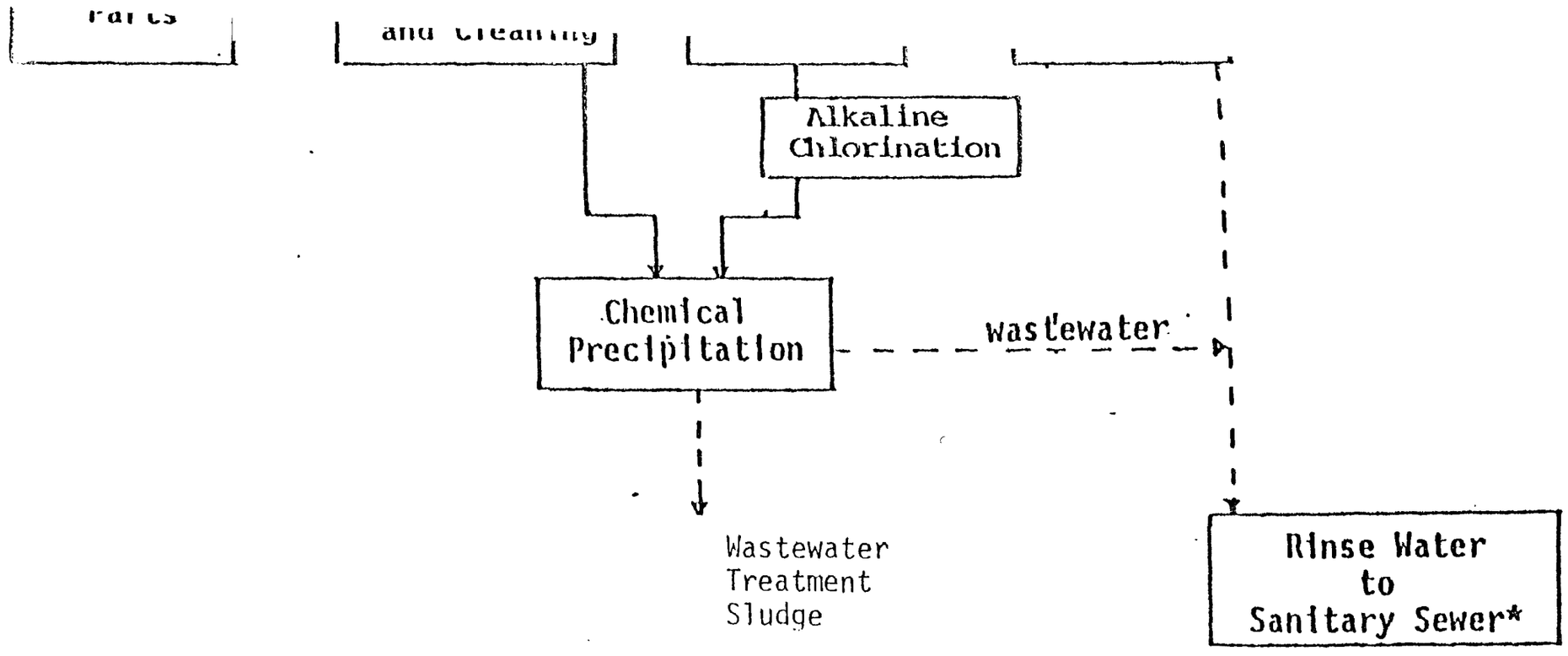

FIGURE 1 TYPICAL ELECTROPLATING PROCESS

acids can also be used (as in passivating), but are not as common as the phosphate/chromate baths. Typical process baths used in the industry are shown in Table 1.[10]

Waste Stream Description

As indicated in Figure 1, the spent plating/coating solution and rinse water is chemically treated to precipitate out the toxic heavy metals and to destroy the cyanide. The extent to which plating solution carry-over or drag-out adds to the wastewater and enters the sludge depends on the type of article being plated and the specific plating method employed.

The composition of these sludges will vary because of the multitude of production processing sequences that exist in the industry. For example, printed circuit board manufacture involves electroplating, etching, electroless plating and conversion coating and would generate one type of sludge. A different processing sequence, on the other hand, would generate a sludge with a differing composition. However, is expected that since most platers conduct a number of differen electroplating operations, all sludges will contain significant concentrations of toxic heavy metals, and may also contain complexed cyanides in high concentrations if cyanides are not properly isolated in the treatment process. Table 2 illustrates the varying composition of these sludges for two of the heavy metals in twelve different plating processes.

The predominant type of wastewater treatment sludge generated from this industry is metal hydroxide sludge (which

Table 1[10]

Typical Electroplating Baths and Their Chemical Composition

Plating Compound	Constituents	Concentration (g/l)
Cadmium Cyanide	Cadmium oxide	22.5
	Cadmium	19.5
	Sodium cyanide	77.9
	Sodium hydroxide	14.2
Cadmium Fluoborate	Cadmium fluoborate	251.2
	Cadmium (as metal)	94.4
	Ammonium fluoborate	59.9
	Boric acid	27.0
	Licorice	1.1
Chromium Electroplate	Chromic acid	172.3
	Sulfate	1.3
	Fluoride	0.7
Copper Cyanide	Copper cyanide	26.2
	Free sodium cyanide	5.6
	Sodium carbonate	37.4
	Rochelle salt	44.9
Electroless Copper	Copper nitrate	15
	Sodium bicarbonate	10
	Rochelle salt	30
	Sodium hydroxide	20
	Formaldehyde (37%)	100 ml/l
Gold Cyanide	Gold (as potassium gold cyanide)	8
	Potassium cyanide	30
	Potassium carbonate	30
	Depotassium phosphate	30
Acid Nickel	Nickel sulfate	330
	Nickel chloride	45
	Boric acid	37
Silver Cyanide	Silver cyanide	35.9
	Potassium cyanide	59.9
	Potassium carbonate (min.)	15.0
	Metallic silver	23.8
	Free cyanide	41.2
Zinc Sulfate	Zinc sulfate	374.5
	Sodium sulfate	71.5
	Magnesium sulfate	59.9

Table 2

Heavy Metal Content for Chromium, and Cadmium in Electroplating Sludges-Dry Weight (mg/l) (4)

Primary Plating Process	Cr	Cd
Segregated Zinc	200	<100
Segregated Cadmium	62,000	22,000
Zinc Plating and Chromating	65,000	1,100
Copper-Nickel-Chromium on Zinc	500	ND
Aluminum Anodizing	1,700	ND
Nickel-Chromium on Steel	14,000	-
Multi-Process Job Shop	25,000	1,500
Electroless Copper on Plastic, Acid Copper, Nickel Chromium	137,000	ND
Multi-Process with Barrel or Vibratory Finishing	570	-
Printed Circuits	3,500	<100
Nickel-Chromium on Steel	79,200	<100
Cadmium-Nickel-Copper on Brass and Steel	48,900	500

results from alkaline precipation). Metallic sulfide sludges, although not widely used, are also generated when wastewater is treated by sulfide precipation. Among those facilities which discharge to publicly owned treatment works (POTW's), approximately 80 percent of the job shops and 70 percent of the captive shops do not presently treat their wastewater and, therefore, do not currently generate water pollution control sludges. However, compliance with the electroplate pretreatment standards for existing job shops will be required by October 1982, and for captives shortly thereafter. Thus, when the regulations are implemented, virtually all electroplaters will generate a sludge and drastically increase the quantity of wastewater treatment sludge produced.

Typical Disposal Practices

A recent study [2] using a 48 plant survey indicated that approximately 20 percent of the electroplating facilities dispose of their waste on-site while the remaining 80 percent haul their waste off-site to commercial or municipal disposal facilities. The actual disposal practices utilized by the industry varies greatly (i.e., landfilling, lagooning, drying beds and drum burial). However, the Agency is aware that electroplating facilities are known to be using extremely poor hazardous waste disposal practices. For example, one printed circuit board manufacturer is know to dispose of their waste sludges in a dry river bed.[11]

Hazards Posed by the Waste

As indicated earlier in Table 2 and as shown in Table 3, wastewater treatment sludges from electroplating facilities contain significant concentrations of the toxic heavy metals cadmium, chromium and nickel with some levels exceeding 1,000 mg/kg (dry weight) and cyanide. Additionally, leaching tests run by the American Electroplaters' Society (AES) under a grant from the Industrial Environmental Research Laboratory (IERL) U.S. Environmental Protection Agency have shown that these metals leach out in significant concentrations with some samples failing the extraction procedure toxicity characteristic (Table 4). The leaching tests used in the AES study were performed on twelve separate samples using the proposed extraction procedure (43 FR 58956-58957). A leaching test was also performed on two samples using the ASTM distilled water leaching test; the results of this test as indicated in Table 4 indicate that two of the contaminants of concern (i.e., chromium and cadmium) may not solubilize in water to the extent found in the acid leaching test. However, since these sludges tend to be disposed of an acid environment (i.e., sanitary landfill), the acid leach test would closer replicate what would be expected to happen under field conditions, and thus is more predictive of potential hazards from improper management. Cyanides have also been shown to leach from these wastes at a concentration range from 0.5 to 170 mg/l.[6] The Public Health Service's recommended concentration limit for cyanide in drinking water in .02 mg/l [15],

Table 3

Projected Sludge Concentrations For Various Heavy Metals and Cyanides (mg/l) (5)*

.utant	Raw Waste Conc. (mean)	Projected Sludge Conc. (mean) 2% Solids	20% Solids
ʿiium	0.08	3.2	32.5
ɛel	5.0	486.2	4862.0
ɔmium, Total	3.8	369.7	3697.0
ıide, Total	0.4	42.9	429.2

ɔjections of sludge concentrations are based on mean raw waste ɔled during an effluent guidelines study. This study utilized an plant data base and the data are derived from analyses of actual waste concentration, assumptions of clarifier removal efficiencies -98%) and non-dewatered and dewatered sludge solids content (2% and respectively). To estimate pollutant concentrations in sludge, the umption is made that:

1. 1% of the influent flow goes to the sludge stream at 2% solids.
2. The clarifier removal efficiencies were 96-98%.

refore,

Mass removed = influent flow x influent waste concentration - (1-.01) x influent flow x effluent concentration

$$\text{Sludge pollutant concnetration} = \frac{\text{mass removed}}{.01 \times \text{influent flow}}$$

Table 4

Extract Concentrations From Electroplating Wastewater Treatment Sludge (mg/l)[4]

Primary Plating Process	Cr*	Cd*
1A Segregated Zinc	1.22	0.23
2A Segregated Cadmium	1.89	126
3A Zinc Plating and Chromating	85.0	6.0
4A Copper-Nickel-Chromium on Zinc	21.8	-
5A Aluminum Anodizing	<0.01	-
6A Nickel-Chromium on Steel	25.4	-
7A Multi-Process Job Shop**	0.24	2.16
8A Electroless Copper on Plastic, Acid Copper, Nickel, Chromium	400	
9A Multi-Pocess with Barrel or Vibratory Finishing**	0.32	0.03
10A Printed Circuits	0.12	.
11A Nickel-Chromium on Steel	4.22	<0.01
12A Cadmium-Nickel-Copper on Brass and Steel	4.85	268

Note: Those concentrations underlined would fail the Extraction Procedure Toxicity Characteristic

* These values were determined using the proposed extraction proced contained in the toxicity characteristic.

** The ASTM distilled water extraction procedure was run on these samples with the following results obtained:

Plant	Cr (mg/l)	Cd (mg/l)
7A	0.63	0.03
9A	0.04	

indicating that cyanide leaching may also lead to a substantial hazard.

Once released from the matrix of the waste, cadmium, chromium, nickel, and cyanide could migrate from the disposal site to ground and surface waters utilized as drinking water sources. Present practices associated with the landfilling, dumping or impounding of the waste may be inadequate to prevent such occurences. Actual damage incidents involving electroplating wastes are presented in Attachment I, again showing that actual mismanagement of electroplating wastes has occurred. For instance, selection of disposal sites in areas with permeable soils can permit contaminant-bearing leachate from the waste to migrate to groundwater. This is especially significant with respect to lagoon disposed wastes because a large quantity of liquid is available to percolate through the solids and soil beneath the fill.

The prevalence of off-site disposal creates a further potential for mismanagement and substantial hazard. Not only is there a danger of mismanagement in transport, but there is the further danger of unmanifested wastes never reaching their destination or of being disposed with incompatible wastes.

An overflow with respect to lagoon disposed wastes might be encountered if the liquid portion of the waste is allowed to reach too high a level in the lagoon; a heavy rainfall could cause flooding which might reach surface waters in the vicinity unless the facility has proper diking and other flood control measures.

In addition to difficulties caused by improper site selection, unsecure land disposal facilities are likely to have insufficient leachate control practices. There may be no leachate collection and treatment system to diminish leachate percolation through the wastes and soil underneath the site to groundwater and there may be no surface run-off diversion system to prevent contaminants from being carried from the disposal site to nearby surface waters.

With regard to the fate of these waste constitutents once they migrate, the heavy metal contaminants present in the waste are elements which persist indefinitely in some form and therefore may contaminate drinking water sources for long periods of time. Cyanides have been shown to be extremely mobile in the soil environment (12), and have been shown to move from soils to groundwater.[13] Thus cyanide is also available for potential release and transport to environmental receptors.

The Agency has determined to list wastewater treatment sludge from electroplating operations as a T hazardous waste, on the basis of chromium, cadmium, nickel and cyanide, although chromium and cadmium are also measurable by the (E) characteristic. Moreover, concentrations for chromium and cadmium in the EP extract from this waste from individual sites might be less than 100 times the national interim primary drinking water standard as indicated (although the Agency's own extraction data indicates that extract concentrations have exceeded the 100 x benchmark for some generators). Nevertheless, the Agency

believes that these are factors in addition to metal concentrations in leachates which justify the T listing. Some of these factors already have been indentified, namely that present industry disposal practices have often proven inadequate; the presence of nickel and cyanide, often in high concentrations, two constitutents not caught by the (E) characteristic; the nondegradability of the three heavy metals and the high concentrations of cadmium and chromium in actual waste streams.

The quantity of these wastes generated is an additional supporting factor. As indicated above, wastewater treatment sludge from electroplating operations will drastically increase in quantity when the pretreatment standards are implemented in October 1982 and these sludges will contain extremely high cadmium, chromium and nickel concentrations (see p. 7 above). Large amounts of each of these metals are thus available for potential environmental release. The large quantities of these contaminants pose the danger of polluting large areas of ground and surface waters. Contamination could also occur for long periods of time, since large amounts of pollutants are available for environmental loading. Attentative capacity of the environment surrounding the disposal facility could also be reduced or used up due to the large quantities of pollutant available. All of these considerations increase the possibility of exposure to the harmful constitutents in the wastes, and in the Agency's view, support a T listing.

Health Effects Associated with Hazardous Waste Constitutents

The toxicity of cadmium, chromium, nickel and cyanide has been well documented. Capsule descriptions on the adverse health and environmental effects are summarized below; more detail on the adverse effects of cadmium, chromium, nickel, and cyanide can be found in Appendix A.

Chromium is toxic to man and lower forms of aquatic life. Contact with chromium compounds can cause dermal ulceration in humans. Data also indicates that there may be a correlation between worker exposure to chromium and development of hepatic lesions.

Cadmium shows both acute and chronic toxic effects in humans. The LD_{50} (oral, rat) is 72 mg/kg. Excessive intake leads to kidney damage. Cadmium and its compounds have also been reported to produce oncogenic and teratogenic effects. Aquatic toxicity has been observed at sub-ppb levels.

Nickel has been found to bring about a carcinogenic response upon injection in a number of animal studies. Nickel has also been demonstrated to present adverse effects in a three generation study with rats at a level of 5 mg/l (5 ppm) in drinking water. In each of the generations, increased number of runts and enhanced neonatal mortality were seen. Chronic exposure to nickel has also resulted in injury to both the upper and lower respiratory tract in man. Additionally, in the aquatic environment, nickel has been found to be toxic to fish at concentrations of 2,480 mg/l and chronically toxic at levels as low as 433 mg/l.

Ferrocyanides exhibit low toxicity, but release cyanide ions and toxic hydrogen cyanide gas upon exposure to sunlight. Cyanide compounds can adversely affect a wide variety of organisms. For example, cyanide in its most toxic form can be fatal to humans in a few minutes at a concentration of 300 ppm. Cyanide is also lethal to freshwater fish at concentrations as low as about 50 mg/l and has been shown to adversely affect invertebrates and fishes to concentrations of about 10 mg/l. The hazards associated with exposure to chromium, cadmium, nickel and cyanide have been recognized by other regulatory programs. Chromium, cadmium, nickel and cyanide are listed as priority pollutants in accordance with §307(a) of the Clean Water Act. Under §6 of the Occupational Safety and Health Act of 1970, a final standard for chromium has been promulgated in 29 CFR 1910.1000; permissable exposure limits have also been established for KCN and NaCN. The U.S. Public Health Service established a drinking water standard of 0.02 mg CN/l as an acceptable level for water supplies. In addition, final or proposed regulations for the State of Maine, Massachusetts, Vermont, Maryland, Minnesota, New Mexico, Oklahoma, and California define chromium, cadmium, nickel, and cyanide containing compounds as hazardous wastes or components thereof.(14)

Attachment I

Damage Incidents Resulting From the Mismanagement of Electroplating Wastes[17]

Columbia County, Pennsylvania (1965) - Unlined lagoons caused contamination of a number of private wells in the area. The lagoons contained plating wastes and were leaking such pollutants as cyanide, copper, nickel, alkylbenzenesulfonate and phosphate.

Illinois - At a farm site in Illinois used for the dumping of highly toxic industrial wastes (mostly from metal finishing operations), three cows died as a result of cyanide poisoning and extensive danger occured to wildlife, aquatic biota and vegetation. Additionally, crops cannot be safely grown in the area again.

Bronson, Michigan (1939) - Since 1939, electroplating industries in Bronson, Michigan have experienced difficulty in disposing of their electroplating wastes. Originally, the wastes were discharged into the city's sewer system which was subsequently emptied into a creek. Contaimination of this water resulted in the death of fish and cattle below Bronson from cyanide poisoning. All the plating wastes of the company were subsequently discharged to ponds.

Lawrenceburg, Tennessee - Between 1962 and 1972 in Lawrenceburg, Tennessee, an industry dumped up to 5,000 gallons of untreated metal plating waste daily into trenches near the city dump.

significant concentrations of hexavalent chromium and traces of cyanide were measured in an adjacent stream by several local residents as a drinking water supply.

South Farmingdale, New York - An aircraft plant, operating in South Farmingdale on Long Island during World War II, generated large quantities of electroplating wastes containing chromium, cadmium and other metals. It has been estimated that between 200,000 to 300,000 gallons per day of these wastes were discharged into unlined disposal basins throughout the 1940's. A treatement unit for chromium was constructed in 1949, but discharge of cadmium and the other metals continued. The local groundwater flows in three unconsolidated aquifers resting on crystalline bedrock. The uppermost aquifer consists of beds and lenses of fine-to-coarse sand and gravel and extends to within 15 feet of the land surface. Groundwater contamination by chromium was first noted in 1942 by the Nassau County Department of Health. Extensive studies in 1962 indicated that a huge plume of contaminated groundwater had been formed, measuring up to 4,300 feet long, 1,000 feet wide and extending from the surface of the water table to depths of 50 to 70 feet below the land surface. Maximum concentrations of both chromium and cadmium were about 10 mg/l in 1962. (Chromium had been measured as high as 40 mg/l in 1949.) This huge contaminated plume cannot be removed or detoxified without massive efforts and will take many more years of natural attenuation and dilution before it

becomes useable again. Meanwhile, the plume is still slowly moving, threatenting a nearby creek and other wells in the area.

Kent County, Michigan - An aquifer used for a municipal waste supply was contaminated by chromium leachate from a sand and gravel pit used as a landfill. The landfill had been taken from a former dumping ground for electroplating wastes. The fill material was removed to ameliorate the pollution problem.

Allegan County, Michigan (1947) - Wells produced yellow water which contained high levels of chromium. About three years before any contamination appeared, a metal-plating company began discharging chrome-plating wastes into an infiltration pit and the surrounding overflow area. Discharge of plating wastes resulted in the contamination of the glacial-drift aquifer. Health Department personnel estimated it would be about six years before the aquifer in the vicinity of the wells would be free of chromate. All private wells in the village of Douglas were condemned.

Riverside County, California (1956) - Chrome plating wastes were discharged on the ground and into a cesspool. Samples from four wells contained concentrations of hexavalent chromium of as much as 3 mg/l and 18 others contained trace amounts. The National Interim Primary Drinking Water Standard for total chromium is 0.05 mg/l.

References

1. Economic Analysis of Pretreatment Standards for Existing Sources of the Electroplating Point Source Category, U.S. EPA, EPA-440/2-79-031, August 1979.

2. Assessment of Industrial Hazardous Waste Practices, Electroplating and Metal Finishing Industries - Job Shops, U.S. EPA, EPA 68-01-2664, September 1976.

3. Electroplating Category RCRA Review. Technical Contractors Final Report, October 1979, Contract 68-01-5827.

4. Electroplating Wastewater Sludge Characterization Study. AES-EPA Cooperative Agreement No. R880026-01, September 1979.

5. Development Document for Existing Source Pretreatment Standards for the Electroplating Point Source Category, U.S. EPA, EPA/440-1-79/085, August 1979.

6. Composite of State Files of "Special Wastes Disposal Applications." 1976-1979. Result of Leachate Tests on Cyanide Containing Wastes from Illinois, Iowa, Kansas and Pennsylvania.

8. Development Document for Pretreatment Limitations Guidelines and Standards for the Electroplating Point Source Category; August 1979. EPA 440/1-79/085.

10. Metal Finishing Guidebook and Directory, Volume 77, No. 13 Metals and Plastics Publications, Inc., Hackensack, New Jersey, January 1979.

11. U.S. EPA, Effluent Guidelines On-going BAT Study.

12. Alesii, B.A. and W.A. Fuller. 1976. The Mobility of Three Cyanide Forms in Soil. pp. 213-223. In Residual Management Land Disposal. W.H. Fuller (ed.), Environmental Protection Agency, Cincinnati, Ohio. PB 256768 268.

13. The Prevalence of Subsurface Migration of Hazardous Chemical Substances at Selected Industrial Waste Land Disposal Sites. 1977. EPA/530/SW-634. U.S. EPA, Washington, D.C.

14. U.S. EPA State Regulations Files, January 1980.

15. U.S. EPA 1979. Cyanides: Ambient Water Quality Criteria. (Draft) EPA PB 296792. National Technical Information Service, Springfield, Virginia.

Listing Background Document

SPENT WASTE CYANIDE SOLUTIONS AND SLUDGES

1. LISTING

The listed wastes are those major waste streams, from several industry segments, which specifically contain either cyanide salts or complexed cyanide compounds. The specific wastes listed are as follows:

Cyanide Salts

Electroplating

Plating bath solutions (R,T)*

Spent stripping and cleaning bath solutions (R,T)

Plating bath sludge from the bottom of plating baths (R,T

Metal Heat Treating

Quenching bath sludge from oil baths (R,T)

Spent solutions from salt bath pot cleaning (R,T)

Mineral Metals Recovery

Spent cyanide bath solution (R,T)

Complexed Cyanides

Electroplating

Plating bath and rinse water treatment sludges (T)*

Metal Heat Treating

Quenching wastewater treatment sludges (T)

Mineral Metals Recovery

Cyanidation wastewater treatment tailing pond sediment (T)

Flotation tailings from selective flotation (T)

Coke Ovens and Blast Furnaces

Dewatered air pollution control scrubber sludges (T)

*Spent plating bath solutions and plating bath sludge from the bottom of plating baths also contain complexed cyanides, but are more significant as sources of cyanide salts.

II. SUMMARY OF BASIS FOR LISTING

A number of different industry categories located nationwide dispose of spent or waste cyanide solutions and sludges, the most prevalent being electroplating, metal heat treating, mineral metals recovery, and coke ovens and blast furnace operations. Cyanide is present in these wastes in the form of either (1) alkali-metallic or alkaline earth cyanide salts such as sodium, potassium, and calcium cyanide or (2) as heavy metal cyanides, ferro and ferricyanides, and ferric ammonium ferrocyanide (iron blue) referred to as complexed cyanides.(1)

The Administrator has determined that waste from these processes may be a solid waste, and as a solid waste may pose a substantial present or potential hazard to human health and the environment when improperly transported, treated, stored, disposed of or otherwise managed, therefore should be subject to appropriate management requirements under Subtitle C of RCRA. This conclusion is based on the following considerations:

1. Each of the wastes generated exhibits either reactive or toxic properties or both due to their cyanide content.

2. The land disposal of cyanide wastes is widespread throughout the United States with 1,940 kkg of cyanide (CN^-) contained in these wastes annually. These wastes generally contain high concentrations of cyanide. This large annual generation rate, and high cyanide concentration level increases the likelihood of exposure and possibility of substantial hazard.

3. Cyanides can migrate from the wastes to adversely affect human health and the environment by the

following pathways, all of which have occured in actual management practice:

(a) generation of cyanide gas resulting from the reactive nature of cyanide salts when mixed with acid wastes;

(b) contamination of soil and surface waters in the vicinity of inadequate waste disposal resulting in destruction of livestock, wildlife, stream-dwelling organisms, and local vegetation; and

(c) contamination of private wells and community drinking water supplies in the vicinity of inadequate waste disposal.

III. SOURCES OF CYANIDE WASTE AND TYPICAL DISPOSAL PRACTICES

A. Overall Description of Industry Sources

Waste cyanide solutions and sludges containing both cyanide salts and complexed cyanides are generated by a number of different industries including electroplating, metal heat treating and mineral metals recovery operations. Approximately 20,000 facilities in the United States use one or more electroplating or heat treating processes in manufacture of primary metals, fabricated metals, machinery, and electronics equipment.[6] An additional 73 facilities use cyanide in the proces of recovering various metals, particularly gold and silver. Complexed cyanide waste solutions or sludges containing only complexed cyanide are generated by a number of other industrial processes, principally iron blue manufacturing*, coke ovens, and blast furnace operations.

*Iron blue manufacturing is discussed in the chromium pigments background document and thus is not presented here.

Table 1 lists the equivalent cyanide (CN^-) consumed annually by each of these processes including the specific types of cyanide salts and complexed cyanides used. Table 2 indicates the number of facilities and types of waste associated with these different sources. Industrial processes which generate these waste cyanide solutions and sludges are further described below.

B. Waste Generation, Waste Stream Description and Waste Management Practices

The major processes which generate cyanide salt-containing waste include (1) electroplating with cyanide plating baths or cyanide stripping or cleaning baths, (2) metal heat treating using cyanide quenching baths, and (3) mineral metals recovery with cyanide plating baths. Complexed cyanide wastes (primarily ferro and ferricyanides) are generated from (1) treatment of electroplating wastewater, (2) treatment of quenching process wastewater from the metal heat treating industry, (3) selective flotation and cyanidation for mineral and metals recovery and the air oxidation and chemical treatment of their wastewaters, and (4) coke oven and blast furnace air scrubbers.

1. Electroplating

a. Generation of Spent Plating, Stripping and Cleaning Bath Solutions

Electroplating, as defined in this document, includes both common and precious metal electroplating, anodizing,

Table 1

Annual Consumption of Cyanide for Cyanide Waste Generating Processes (kkg of CN^- equivalents)[4]

	Electro-plating	Heat Treating	Mineral and Metals Recovery	Coke Ovens and Blast Furnace
Cyanide Salts				
NaCN	10,292	1,428	1,592	-
KCN	72	65	30	-
$CaCN_2$	-	-	90	-
Complexed Cyanides				
Heavy Metal	2,346	-	-	-
Ferrocyanides	-	65	451	-
Ferricyanides	-	-	30	-
TOTAL	12,710	1,558	2,193	0

Table 2

CYANIDE WASTE SOURCES

Source	Number of Facilities	Types of Wastes(s)
Electroplating	13, 000[a]	Cyanide salts and complexed cyanides (Solution and sludge)
Minerals and Metals Recovery	73[b]	Cyanide salts and complexed ferro and ferricyanide (solutions and sludges in tailing ponds)
Metal Heat Treatment	7,000[a]	Sodium and potassium cyanide (solution and sludge)
Coke Ovens and Blast Furnaces	287 coke ovens, 200 blast furnaces, 48 with both[8]	Iron cyanide complexes (sludge)

[a] Based on Oct. 1979 Effluent Guidelines document estimates. (U.S. Environmental Protection Agency. Oct., 1979. Draft Development for Effluent Limitations Guidelines, New Source Performance Standards and Pretreatment Standards for the Photographic Processing Point Source Category. Washington, D.C.).

[b] Estimate of facilities using cyanidation or selective flotation with cyanide.

coating (i.e., coloring, chromating, phosphating and immersion plating), chemical etching and milling, electroless plating, and printed board manufacturing. The primary purpose of electroplating operations is to apply a surface coating, typically by electrode decomposition, to provide protection against corrosion, to increase wear or erosion resistance, to restore worn parts to their original dimensions, or for decoration.[7] The operation itself involves immersing the article to be coated/plated into a bath consisting of acids, bases, salts, etc. A plating line consists of a series of unit operations conducted in a sequence in which one or more coatings are applied or a basis material is removed. (For a more detailed discussion of the electroplating process see the Development Document for Existing Source Pretreatment Standards for the Electroplating Point Source Category, August 1979).[7]

Figure I-1 in Appendix I illustrates a standard electroplating process. Cyanides are used to make-up the various plating/coating solutions and as stripping and cleaning bath solutions.[7] For example, the electrolytic baths used in both chromium and precious metal electroplating typically consist of cyanide salts or sodium, potassium, cadmium, zinc, copper, silver, and gold.[1] Seventy-five percent of those facilities that conduct both common and precious metals electroplating utilize cyanide.[1] After extended use, plating baths become deficient in the specific ion

being plated/coated, leaving cyanides in solution either as simple ions or in complexes. After extended use of stripping and cleaning solutions, metals begin to accumulate so that further removal of metal coatings on articles becomes difficult. At that point these solutions are dumped.[7] These plating, stripping and cleaning bath solutions, when discarded, represent the major sources of cyanide salt containing wastes generated in electroplating operations* (and a minor source of complexed cyanides).

b. Management of Spent Plating, Stripping and Cleaning bath Solutions, and Generation of Treatment Sludges

Spent plating, stripping and cleaning bath solutions and rinse waters are chemically treated primarily with hypochlorite or chlorine to convert cyanide compounds to carbon dioxide, metal salts, nitrogen, and water.[7]

Complexed cyanides that are present in hypochlorite-treated bath solutions and rinse waters are precipitated as part of the sludge during any additional wastewater treatment (see Figure I-2 in Appendix I). Even though the cyanide is treated, a certain percentage of the complexed cyanide is

*Another major source of cyanide salt waste is the rinse water contaminated by the solution remaining on the article that has been plated, stripped, or cleaned. This rinsewater is either treated and present in wastewater treatment sludge, in which case it is part of a listed waste, or discharged directly to a POTW. Rinsewater which is mixed with domestic sewage that passes through a sewer system before it reaches a POTW for treatment is excluded from RCRA jurisdiction under §261.4(a)(1). The Agency is in the process of developing pre-treatment standards for the electroplating industry.

not destroyed and thus may be present in the sludges.[1,8] These sludges are typically disposed of in a sanitary landfill.[1,8]

c. Plating bath sludge from the bottom of cleaning baths

Additionally, plating solutions that have been restored several times often leave a sludge in the bottom of the bath which must be cleaned out when spent solutions are discarded. These sludges often contain cyanide salts and complexed cyanides and typically are placed in drums for chemical landfill disposal.[1]

Available plant information indicates that nearly all of the cyanide containing materials discharged to the environment are treated, although it is possible that some small plating shops may either discharge directly to municipal sewer system or landfill spent solutions.[1]*

2. Metal Heat Treatment

a. Generation of Quenching Bath Sludge and Spent Solutions from Salt Bath Pot Cleaning

Case hardening by carburizing adds carbon to the surface of steel.[7] Liquid carburizing uses cyanides as the source of carbon. Liquid carburizing is accomplished by

*However, since 60 to 80 percent of these small plating shops have shifted to non-cyanide baths (such as zinc), the quantity of untreated cyanide waste landfilled from electroplating operations is getting smaller.[9]

submerging the metal in a molten salt bath containing sodium cyanide (6-23%). Figure I-3 in Appendix I illustrates the liquid carburizing process. Sodium cyanide is also used in the case hardening of steel using either the liquid nitriding or carbonitriding processes.

Cyanide salt containing-wastes from this process arise generally from two sources: (1) quenching sludge and (2) pot cleanout. In the quenching process, oil is used as the quenching media. The sodium cyanide adhering to the case hardened steel during oil quenching is not soluble and settles to the bottom of the quenching tank as a sludge. Another source of cyanide waste (although generated in less volume than the quenching sludge) results from cleaning out salt bath pots.

b. Generation of Quenching Wastewater Treatment Sludge

Where process wastewaters are chemically treated, sludges from these operations are typically disposed of in landfills.(10) During waste treatment some of the untreated cyanide may complex with heavy metals and precipitate in the sludge.(7)

3. Mineral and Metals Recovery

Cyanides are used extensively in the extraction and beneficiation of gold and silver from ore and as a depressant in selective flotation processes.

a. Generation and Management of Cyanidation Wastewater Tailings Pond Sediment

Use of cyanide (cyanidation) in the recovery of gold and, to a lesser extent, silver, varies in process complexity depending on the ore matrix. Generally, the ore is pulverized to expose gold and silver deposits prior to leaching by caustic cyanide solutions.[1] The gold or silver-laden caustic cyanide solution is then electrolyzed, and the gold or silver is deposited on stainless steel wool cathodes (see Figure I-4 in Appendix I). The cyanide bath is then chemically treated with hypochlorite or chlorine to destroy cyanide salts and complexes. The resulting wastewater tailings pond sediment is a listed waste. Ferrocyanide and ferricyanide complexes formed in tailings pond sediment are periodically dredged and disposed of in landfills.[1]

b. Generation of Spent Cyanide Bath Solutions[1]

This waste stream also arises from the cyanidation process described above. Some minerals and metals recovery plants, however, instead of chemically treating spent cyanide bath solutions, discharge the waste directly to tailing ponds where oxidation and sunlight are relied upon to convert cyanide salts to complex cyanides which precipitate into the pond sediment. In this case, the listed waste stream is the spent cyanide bath solution.

c. Generation of Froth Flotation Tailings

Froth flotation tailings are also cyanide-containing wastes discharged to tailings ponds without prior chemical treatment. Inorganic cyanide salts, and calcium cyanides and sodium ferro- and ferricyanides, are extensively used as chemical additives in froth flotation as a depressant.(1) Froth flotation is a process by which desired mineral (copper, lead, zinc, silver) attach to air bubbles, float to the surface as a foam or froth, and overflows the flotation cell.(1) Undesirable ore ("gangue") is removed from the bottom of the cell and discharged to a tailings pond as shown in Figure I-5 in Apendix I. Cyanides are often added to depress the flotation of undesirable components of the pulverized ore. Cyanide-containing wastes are discharged to the tailings ponds along with the gangue. Tailings pond sediment containing complexed cyanide is disposed of in landfills similar to cyanidation wastes.(1)

4. Coke Oven and Blast Furnace

a. Coke Oven Cyanide Waste Generation

Thermally generated cyanides result from the high temperature reaction of carbon and nitrogen compounds in a reducing atmosphere.(8) Conditions favorable to cyanide generation exist in coking operations, blast furnace production or iron and ferroallys, and production of ferro-alloys by means other than blast furances.

During coke production, carbon compounds and ammonia, both produced by coal breakdown, combine to produce hydrogen cyanide, some of which is collected as condensate in desulferization scrubber sludges.[8] Desulfurization scrubbers installed on many of the coke oven stacks collect an estimated 36,300 kkg of solids in a scrubber solution per year of which 3,555 kkg are cyanide equivalents.[8] The scrubber solution* is dewatered, and the resulting scrubber supernatant is filtered and discharged.** Solids from the dewatering operation are then combined with the solids filtered from the scrubber liquor,*** forming the listed waste, the dewatered scrubber sludge. Most of the cyanide (3,553 kkg) goes to the scrubber liquor, and approximately 2 kkg of cyanide remains in the scrubber sludge. Estimated concentrations of complexed cyanide in the dewatered scrubber sludge are 55 ppm (2 kkg of cyanide in 36,300 total solids).

b. Blast Furnace Cyanide Waste Generation

Hydrogen cyanides are also produced in blast furnace operations when nitrogen, water, and carbon react at high

*The "scrubber solution" referred to in the text is properly referred to as scrubber sludge. The term "scrubber solution" is used to aviod confusing this stream with the listed waste, which is dewatered scubber sludge.

**Discharge of scrubber supernatant is usually regulated under the NPDES permit program.

***Filtered solids (filter cake) may be recycled back into the process for sintering.

temperatures. Although no data are available on amounts of hydrogen cyanide generated in blast furnace operations, it is estimated that scrubber systems remove in solution 915 kkg of cyanide equivalents (CN^-).[8] The scrubber solution is then dewatered (much as in coking operations). The resulting sludge is the listed waste stream.

Based on limited surveys, blast furnace scrubber liquor appears to contain most of the cyanide. Analysis of the scrubber sludge indicates that 2,720 kkg of solid waste produced annually contain approximately 1 kkg of CN^- or cyanide concentrations of about 400 ppm.[8]

C. Waste Characteristics and Quantities

Waste cyanide solutions and sludges are generated nationwide with most disposal occuring in EPA Regions I through IV and in Region IX.[10] The quantity and types of wastes that result from any of these processes are variable and depend upon operation conditions at each facility, but significant cyanide concentrations in all of these waste streams are anticipated. Nearly all cyandie processes include some form of chemical treatment which destroys most of the cyanide prior to precipitaion of solids and heavy metals. Of the total 16,400 kkg equivalent cyanide consumed annually, 12,710 kkg is used by the electroplating industry.[4] A large percentage of that is either oxidized by electrolysis in the

plating bath, destroyed during alkaline chlorination or ozonation prior to wastewater discharge.[1] This means that approximately 127 kkg of equivalent cyanide (CN^-) (probably in the salt form) is disposed of annually on land by this industry. Of the remaining 3,750 kkg (from the total of 16,460 kkg) equivalent cyanide (CN^-) consumed annually, about 48 percent (1,940 kkg - 127 kkg = 1,813 kkg) is disposed of on land as solutions or sludges.[4] The balance is either recovered or chemically destroyed by alkaline chlorination, electrolysis, or ozonation. Sixty-seven percent of this 1,813 kkg of CN^- disposed of (by industries other than electroplating) is in complexed cyanide form.

Table 3 lists the types of cyanide wastes generated, the range of quantity disposed of in solid waste streams by an individual facility, and the total quantity of waste for each of the contributing sources of manufacturing processes. These quantities are considered significant in light of cyanide's migratory potential (see p. 24) and high toxicity. The fact that disposal occurs nationwide is also significant, since the wastes are exposed to many differing environmental conditions and management situations, increasing the possibility of mismanagement.

Cyanide is expected to be present in most of these waste streams in high concentrations. Table 3A contains cyanide salt and complexed cyanide concentration data from listed electroplating and metal heat treating wastes. Concentrations

Source	Type of Waste	Annual Waste Quanity/Facility kkg	Cyanide (CN^-) Quantity/ Facility (kkg)	Total Annual Waste Quantity (kkg)	Cyanide Salts (Cn^-) Disposed Annually (kkg)	Complexed Cyanides (CN) Disposed Annually (kkg)
Electroplating	Spent plating, Stripping and Cleaning bath solutions; plating bath sludge; plating bath and rinse water treatment sludge	25-1,250[a]	--	42,000 [b]		--
Mineral and Metals Recovery	Tailing pond sediment and cyanidation wastewater treatment sludge	--	20-300[d]	--	0	1,116[e]
Metal Heat Treating	Quenching bath sludge and spent bath solution and quenching wastewater treatment sludge	11-51[f]	0.2-1.1[b]	6,125[10]	759[i]	--
Coke oven and Blast Furnace	Air pollution control sludge	--	--	41,062[8]	0	<100

[a]Quantities based on the range in numnber of number of employees per facility 10-500 employees[7]
[b]Total based on estimated 16.8 employees per facility[1]; 10,000 facilities[7]; and 2.5 kkg/yr-employee (wet basis)[10] (see figure 1)
[c]Total based on estimated 62% of total consuption of 20,500 kkg (CN) and 1% disposal[1]
(continued)

Table 3 (Continued)

[d]Total based on mining capacity and NaCN and depressant consuption data[1].
[e]50% of NaCN equivalent consuption[1]
[f]Range of total annual waste for facilities included in a composite of state wste disposal applications assuming waste density 4kg/gallon[2]. Based on total waste disposal estimates average quantity per facility is 3.5 kkg/yr[10].
[g]Total based on estimated 25 employees per facility; 7,000 facilities of which 25% use cyanide[1]; 0.14 kkg/yr-employee[10] (See figure 1)
[h]Range of content of waste per facility for facilities iincluded in a composite of state waste disposal applications assuming waste density and kg/gallon[2]
[i]Total based on estimate that 13% of waste are cyanide wastes and 25% of all cyanide waste is destroyed.

Industry	Source*	Waste/Form		
	Cyanide Salts			
Metal Heat Treating	Quenching Bath sludge and Spent Solution	Potassium and Sodium Cyanide/ Solid**	3,000	92,300
Metal Heat Treating	Quenching Bath sludges	Potassium and Sodium Cyanide/ Sludge	13,200	8,530
Electroplating	Spent Cleaning Bath Solution	Sodium Cyanide/ Solution	22,500	350,000
Electroplating	Spent Cleaning Bath Solution	Cyanide Salts/ Solution	14,000	38
Electroplating	Spent Plating Bath Solution	Sodium Cyanide Solution	6,600	14,547
Electroplating	Plating Bath Sludge	Metal Salts/Sludge	1,000	64
	Complexed Cyanides			
Electroplating	Plating Bath Treatment Sludge	Complex Metal Cyanide/Solution	15,600	80
Electroplating	Spent Plating Bath Solution	Complex Metal Cyanide/Solution	6,600	14,329
Electroplating	Spent Plating Bath Solution	Complex Metal Cyanide/Solution	36,000	2,000
Electroplating	Plating Bath Treatment Sludge	Complex Metal Cyanide/Sludge	12,000	1,681
Metal Heat Treating	Quenching Wastewater Treating Sludge	Comples Metal Cyanide Solids***	6,600	26,803

Table 3A
Cyanide Wastes[2]
Concentrations
Continued

Industry	Source*	Type of Waste/Form**	Annual Disposal in Gallons	Cyanide Concentrations ppm
Metal Heat Treating	Quenching Wastewater Treatment Sludge	Complex Metal Cyanides/Sludge	5,500	8,400

*Source descriptions included in special waste disposal applications were not always the same as those presented in the listing[2]. An attempt was made to classify the waste in its approximate category

** These descriptions were taken directly from the special waste disposal applications[2].

*** Solid cyanide wastes are placed in drums and disposed of. Solid wste quantities are expressed in gallons related to the size of the drum used to containerize waste for disposal.

range from 38 ppm to 92,300 ppm, with most concentrations exceeding 1,000 ppm. In light of the health dangers associated with cyanide (see pp.27-29 below), these concentrations are deemed to be of regulatory concern.

The Agency presently lacks concentration data on wastes generated by the mineral metals recovery industry, although concentrations are believed to be high based on the large quantity of cyanides disposed of annually. (See Table 3)

Cyanide concentrations in coke ovens and blast furnace scrubber sludges are somewhat less, probably not exceeding 400 ppm (see pp. 14-15 above). These concentrations could still prove significant in light of cyanide's migratory potential and extreme toxicity.

D. Typical Disposal Practices

In general, waste management of cyanide solutions and sludges relies primarily on disposal in municipal, chemical, or company-owned landfills.(1)

Facilities using only one process, sometimes find it more cost effective to landfill spent cyanide salt solutions (without any chemical treatment) along with cyanide sludges.(1) Of course, as described above, most spent solutions are managed initially in holding ponds, which are treatment facilities under RCRA.

Spent cyanide solutions and sludges from electroplating operations are generally treated by alkaline chlorination prior to discharge into municipal sewer systems or landfill

disposal. Data characterizing the disposal practices in some states indicate, however, that some small plating shops dispose of spent plating solutions and sludges which still contain untreated cyanide in landfills.[1]

Mineral and metals recovery wastes from extraction of gold and silver (cyanidation) and selective flotation of copper, lead, zinc, and silver are diposed of in tailing ponds which may be lined with clay and are sometimes constructed to control run-off and dam seepage.[1] The size, construction, and location of tailing ponds and retention of waste solutions in ponds varies from site to site depending on whether mineral and metals recovery wastes include cyanide containing solutions or sludges. When wastes are not alkaline chlorinated to destroy cyanide prior to disposal, tailing ponds are used as holding ponds where natural air oxidization and sunlight destroy the cyanide or where the cyanides are complexed with metals in solution and by attachment to gangue materials.[1]

Scrubber sludges from coke ovens and blast furnaces are generally dewatered and the filter cake reused in the sintering process feed. The remaining solid wastes, which contain small quantities of complexed cyanides, are disposed of in company owned or off-site landfills.

This data suggests that cyanide-containing wastes are sometimes managed properly. Many damage incidents involving

cyanide-containing wastes (set forth at pp. 25-26 below)* indicate, however, that waste mismanagement may occur and cause substantial hazard. Furthermore, proper management of wastes capable of causing substantial hazard if mismanaged does not make a waste non-hazardous under the definition of hazardous waste contained in Section 1004(5) of RCRA. In fact, industry management practice described above suggests strongly that industry itself regards these wastes as hazardous and requiring careful management.

IV. HAZARDS POSED BY THE WASTES

A. Nature of Hazards

Cyanide salt-containing wastes exhibit both reactive and toxic properties which make them potentially hazardous to human health and the environment. If exposed to mild acid conditions, these wastes can react to generate toxic hydrogen cyanide gas. Cyanide wastes are land disposed and if improperly managed, cyanide can migrate from these wastes as toxic hydrogen cyanide gas or in a soluble form into groundwater or surface water supplies. Adverse health effects on landfill operators and environmental stress to avian and possibly human populations is possible if hydrogen cyanide is generated.

*Additional damage incidents are described in the electroplating waste background document.

Industry	Source *	Type of Waste/Form**	Annual Disposal in Gallons	Cyanide Concentrations ppm	Leachable Cyanide/ Metals (pH 5.5 Conditions) Within These Wastes (ppm)
Electroplating	Spent Plating Bath Solution	Complex Metal Cyanide/Solution	36,000	2,000	80
Electroplating	Plating Bath Treatment Sludge	Complex Metal Cyanide/Solution	12,000	1,681	170
Metal Heat Treating	Quenching Waste-water Treatment Sludge	Complex Metal Cyanide/Solids***	6,600	26,803	915
Metal Heat Treating	Quenching Waste-water Treatment Sludge	Complex Metal Cyanide/Sludge	5,500	8,400	9.3

*Source descriptions included in special waste disposal applications were not always the same as those presented in the listing(1). An attempt was made to classify the waste inits appropriate category.

**These descriptions were taken directly from the special waste disposal applications(2).

***Solid cyanide wastes are placed in drums and disposed of. Solid waste quantities are expressed in gallons related to the size of the drum used to containerize waste for disposal.

utilized in the Subtitle C EP.* This data indicates that the complexed cyanides tend to be relatively soluble and the cyanide salts were highly soluble in this environment. In all cases, cyanide leached from the waste in concentrations exceeding the U.S. Public Health Service recommended standard, in most cases, by many orders of magnitude. Thus, cyanide is fully capable of migrating from disposed wastes.

Cyanide would be capable of migrating from these wastes if improperly disposed, for example, if disposal occured in areas with permeable soils, or if adequate leachate control measures are not adopted. The migrating cyanide is likely to be highly mobile, since cyanides have been shown to be extremely mobile in the soil environment. pH appears to influence the mobility, with greater mobility at high pH.(14) Even clay liner systems may not adequately impede migration; as in the presence of water, montmorillonite clays (which have high surface areas) sorbed cyanide only weakly.(15) Cyanide has also been shown to move through soils into groundwater.(16) In light of the extreme toxicity of this waste constituent in the environment, its migratory potential in both salt and complexed form, and its environmental persistence and mobility, it strongly appears that waste mismanagement can result in substantial potential hazard.

*In light of the prevalent landfilling of these wastes, and the great number of different disposal sites utilized in managing different listed waste streams, it is certainly a plausible assumption that these wastes may be disposed of in acidic environments.

Certainly the Administrator cannot with assurance state that cyanide will not migrate from these wastes and persist in the environment; yet such assurance is required to justify a decision not to list these wastes.

In any case, actual damage incidents involving cyanide-containing wastes, including some of the wastes listed here, confirm that cyanide can migrate, persist, and contaminate groundwater, public drinking water, soil, and vegetation. For example, a landfill site in Gary, Indiana, in which large quantities of cyanide electroplating wastes have been disposed, has leached into groundwater supplies.(17)

A total of 1,511 containers (mostly 55 gallon and 30 gallon drums) of industrial waste containing cyanides, heavy metals, and miscellaneous other materials were disposed of improperly on a farm near Bryon, Illinois. Leachate entering nearby surface water was responsible for the death of three cows and substantial damage to wildlife (birds, downstream aquatic community, stream bottom-dwelling organisms) and local vegetation. Pathological examinations established that the cattle died of cyanide poisoning.(12)

In 1965, unlined lagoons in Columbia County, Pennsylvania, caused contamination of private wells in the area. The lagoons were leaking plating wastes containing cyanide, copper, nickel allkylbenzenesulfonate, and phosphate.(12)

A landfill in Monroe County, Pennsylvania, that accepts plating process wastes such as hydrocyanic acid, has created

a groundwater pollution problem in the area.[12]

Between 1962 and 1972 in Lawrenceburg, Tennessee, an industry dumped up to 5,000 gallons of untreated metal plating waste daily into trenches near the city dump. Trace quantities of cyanide were measured in private wells and in an adjacent drinking water supply.[12] More recently, cyanide wastes were disposed down boreholes in Pittston, Pennsylvania, which discharged directly into a nearby waterway.[13]

2. Reactivity Hazard

Cyanide salt-containing wastes (although not complexed cyanide wastes) pose a reactivity hazard as well. These are cyanide bearing wastes which when exposed to mild acidic conditions react to release toxic hydrogen cyanide gas, and thus possess the characteristic of reactivity (see §261.23 (a)(5).

Documented damage incidents resulting from mismanagement of wastes from disposal of cyanide salts are presented below:

Damage Resulting from Reactivity of Wastes

(1) A tank truck emptied several thousand gallons of cyanide waste onto a refuse at a sanitary landfill in Los Angeles County, California. Another truck subsequently deposited several thousand gallons of acid waste at the same location. Reaction between the acid and the cyanide evolved large amounts of toxic hydrogen cyanide gas. A potential disaster was averted when a local chlorine dealer was

quickly called to oxidize the cyanide with hydrogen chlorine solution.[12] Hydrogen cyanide gas can be fatal to humans in a few minutes at a concentration of 300 ppm. The average fatal dose is 50 to 60 mg.

(2) A standard procedure at a Southern California disposal site for handling liquid wastes containing cyanides and spent caustic solutions was to inject these loads into covered wells dug into a completed section of a sanitary landfill. Routine air sampling in the vicinity of the wells detected more than 1000 ppm HCN. No cyanide was detected during addition of the spent caustic to a new well. On the basis of these discoveries, use of the wells was discontinued. The cyanide gas was apparently formed in the well as a result of lowering of the pH of the waste by CO_2 and organic acids produced in the decomposition of refuse.[12]

V. HEALTH EFFECTS

The toxicity of both cyanides and hydrogen cyanide have been well documented. Cyanide in its most toxic form can be fatal to humans in a few minutes at a concentration of 300 ppm. Cyanide is also lethal to freshwater fish at concentrations as low as about 50 mg/l and has been shown to adversely affect invertebrates and fish at concentrations of about 10 mg/l. Hydrogen cyanide is also extremely toxic to

humans and animals, causing interferences with respiration processes leading to asphyxiation and damage to several organs and systems. Toxic effects have also been reported at the very low exposure level of less than 1 mg/kg.[15,16]

The hazards associated with exposure to cyanide and hydrogen cyanide have also been recognized by other regulatory programs. Congress listed cyanide as a priority pollutant under §307 of the Clean Water Act of 1977. In addition, the U.S. Public Health Service established a drinking water standard of 0.2 mg/l as an acceptable level for cyanide in water supplies. The Occupational Safety and Health Administration (OSHA) has established a permissible exposure limit for KCN and NaCN at 5 mg/m^3 as an eight-hour time-weighted average. Additionally, the OSHA permissible limit for exposure to HCN is 10 ppm (11 mg/m^3) as an eight-hour time-weighted average. DOT requires a label stating that HCN is a poisonous and flammable gas.

Finally, final or proposed regulations of the states of California, Maine, Maryland, Massachusettes, Minnesota, Missouri, New Mexico, Oklahoma and Oregon define cyanide containing compounds as hazardous wastes or components thereof.[17]

A more detailed discussion of the health effects of cyanide is contained in Appendix A.

V. REFERENCES

1. Midwest Research Institute. April 1976. The Manufacture and Use of Selected Cyanides. Kansas City, Mo. Prepared for U.S. Environmental Protection Agency. EPA 560/6-76-012. Pp. 6-11, 24-99.

2. Composite of State Files of "Special Waste Disposal Applications." 1976-1979. Results of Leachate Tests on Cyanide Containing Wastes from Illinois, Iowa, Kansas and Pennsylvania.

3. Cotton, F. A. and G. Wilkinson. 1979. Advanced Inorganic Chemistry. John Wiley & Sons, Inc., New York. pp. 300-301.

4. Production and Use of Cyanide, Draft Report, Contract 68-01-3852, Task Order 22. Prepared for EPA-MDSD by Versar, Inc., Springfield, Virginia (1978).

5. U.S. Environmental Protection Agency. July 1976. Quality Criteria for Water. Office of Water and Hazardous Materials. Washington, D.C. p. 67.

6. Webster, W. 1979. U.S. Environmental Protection Agency. Personal communication.

7. U.S. Environmental Protection Agency. February, 1978. Development Document for Proposed Existing Source Pretreatment Standards for the Electroplating Point Source Category. EPA 440/1-78/085.

8. Radian Corporation. February 1977. Industrial Process Profiles for Environmental Use: Chapter 24 The Iron and Steel Industry. Austin, Texas. Prepared for U.S. Environmental Protection Agency, IERL, Research Triangle Park, N.C. EPA 600/2-77-023X.

9. Lancy, L.E. 1979. Dart Industries, Inc. Lancy Laboratory Division, Elienople, Pa.

10. Wapora, Incorporated. March, 1977. Assessment of Industrial Hazardous Waste Practice Special Machinery Manufacturing Industries. Washington, D.C. Prepared for the U.S. Environmental Protection Agency, Office of Solid Waste, Washington, D.C. SW-141c.

11. U.S. Environmental Protection Agency. July 1975. Development Document for Effluent Limitations Guidelines and New Source Performance Standards for the Iron and Steel Foundry Industry.

12. U.S. Environmental Protection Agency. 1978. Hazardous Waste Incidents. Office of Solid Waste, Hazardous Waste Management Division. Unpulished, open file data.

13. Philadelphia Inquirer. October 15-26, 1979. Series of Articles Related to Pittston Cyanide Disposal.

14. Alesi, B.A. and W.A. Fuller. 1976. The Mobility of Three Cyanide Forms in Soil. Pp. 213-223. In Residual Management by Land Disposal, W. H. Fuller (ed.), Environmental Protection Agency, Cincinnati, OH PB 256768 268.

15. Cruz, M., Et al. 1974. Absorption and Trans Formation of HCN on the Surface of Copper and Calcium Montmorillanite Clay Minerals 22: 417-425.

16. The Prevalence of Subsurface Migration of Hazardous Chemical Substances at Selected Industrial Waste Land Disposal Sites. 1977. EPA/520/SW-634. U.S. EPA, Washington, D.C.

17. Chemical Engineering News, Editors Newsletter, November, 1979.

APPENDIX I

PROCESS FLOW DIAGRAMS

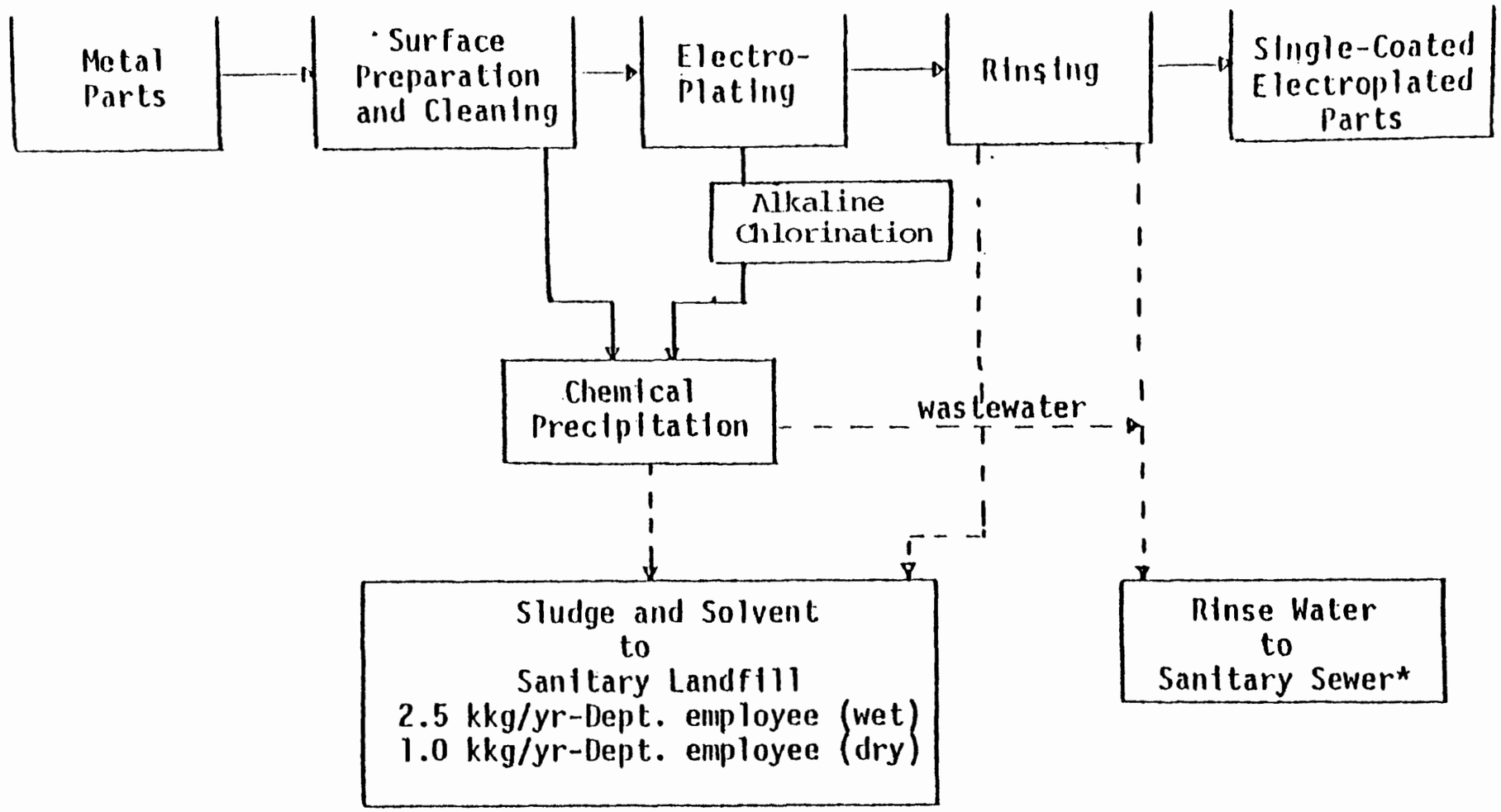

*Due to pending EPA effluent guidelines, rinse water discharge to sewers may be prohibited in the future. This wastewater generation rate presently amounts to 1.0 kkg/yr-Dept. employee.

FIGURE I-1 SIMPLIFIED TYPICAL ELECTROPLATING OPERATION [10]

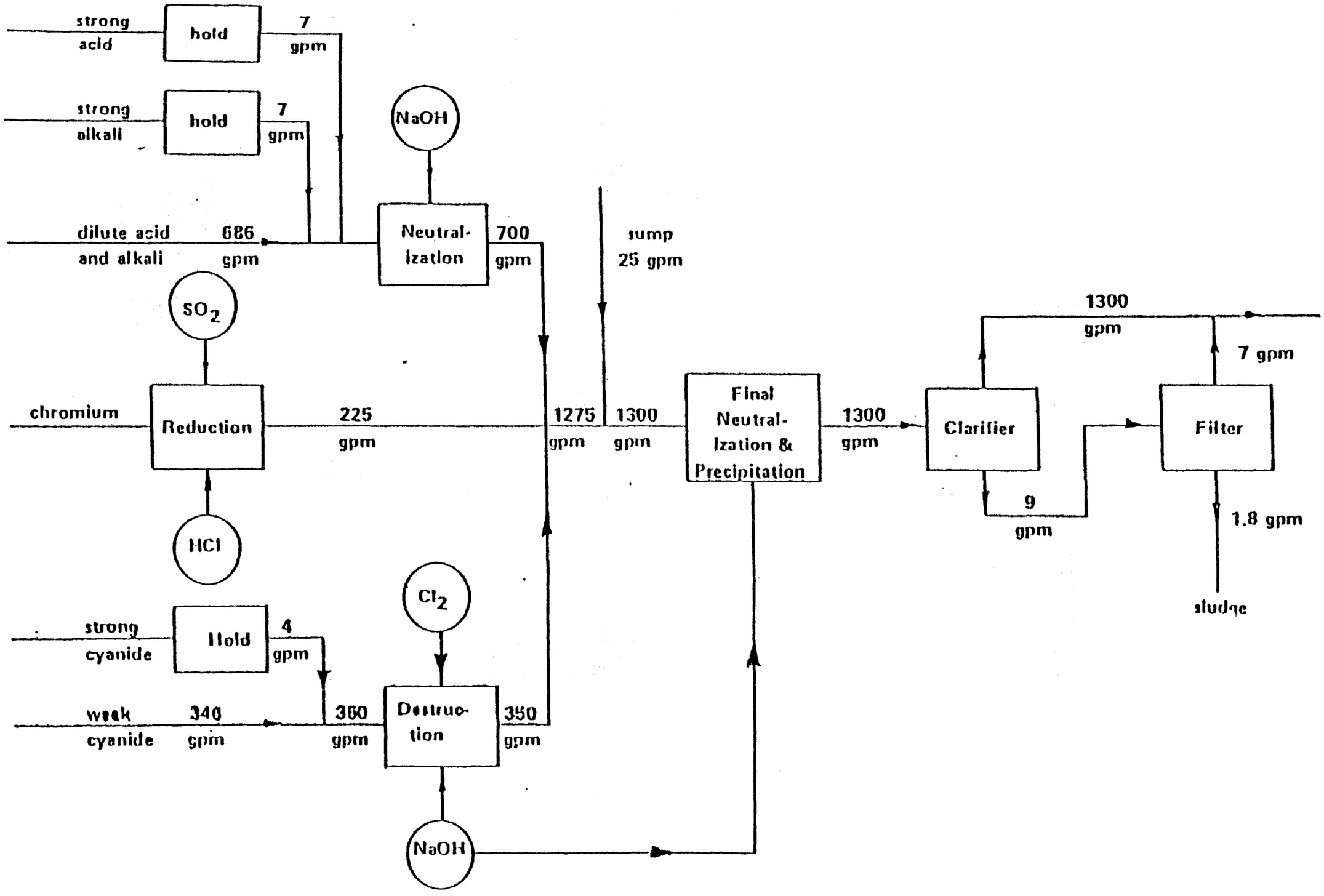

FIGURE I-2 DIAGRAM OF A TYPICAL CONTINUOUS TREATMENT PLANT[7]

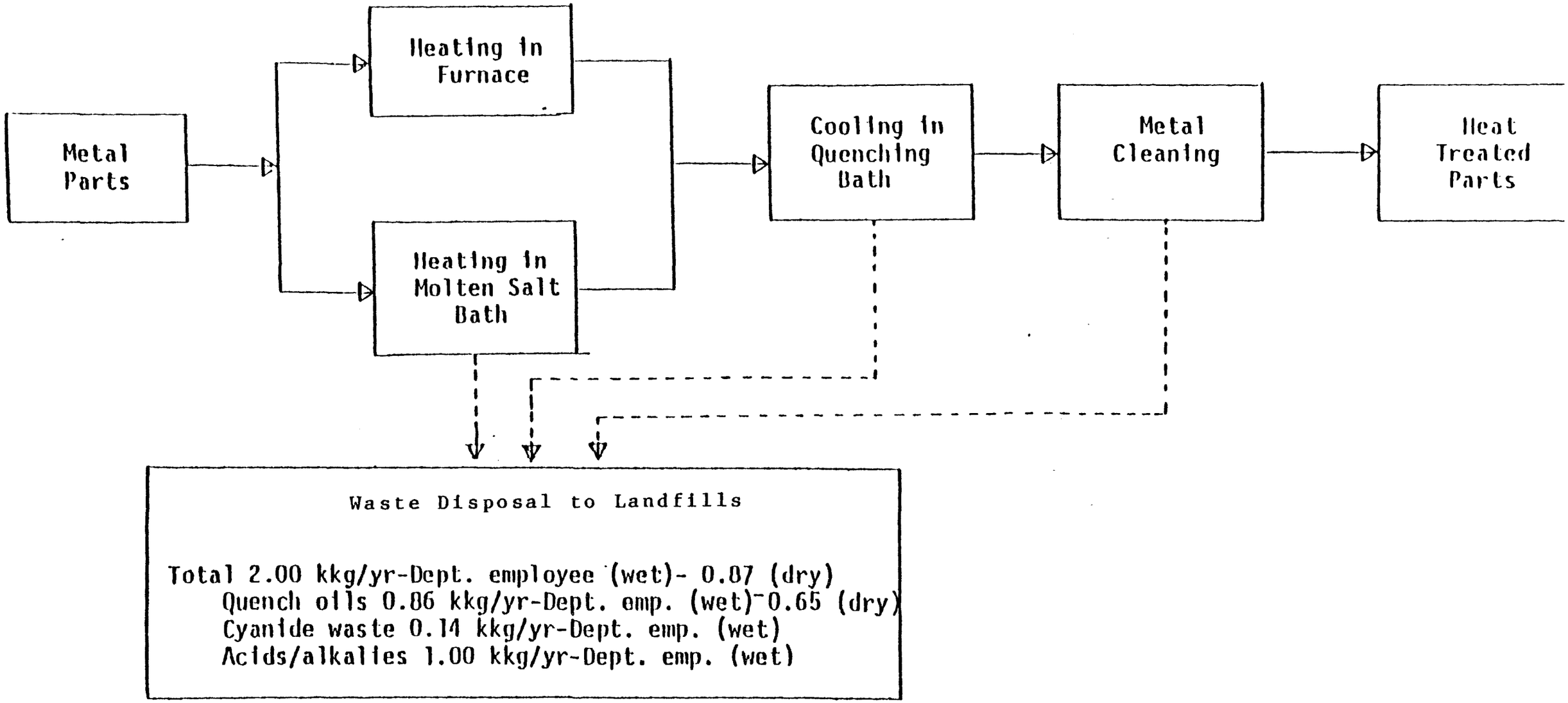

FIGURE I-3 SIMPLIFIED TYPICAL HEAT TREATING AND CARBURIZING OPERATION (10)

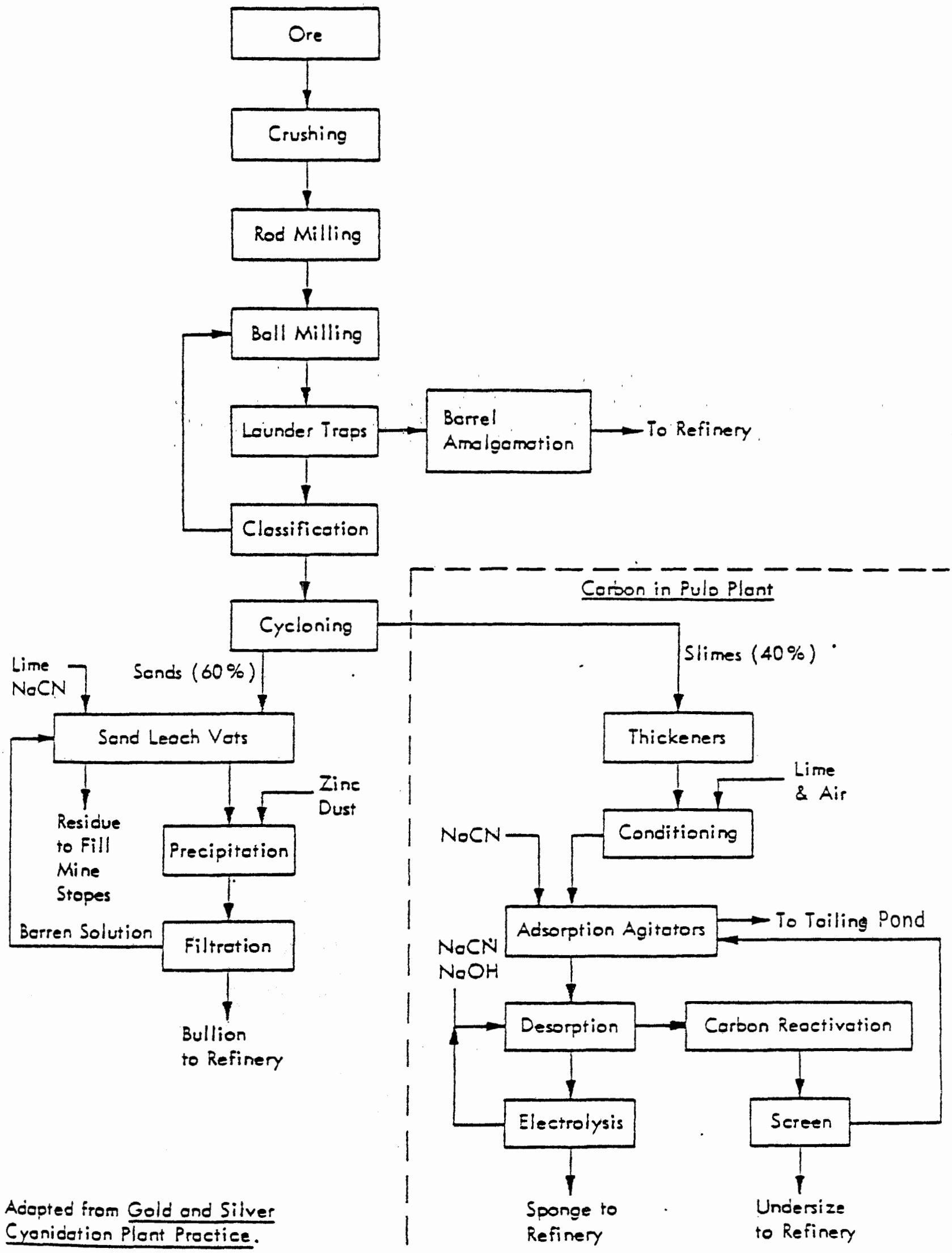

FIGURE I-4 GOLD AND SILVER RECOVERY PROCESS SCHEMATIC[1]

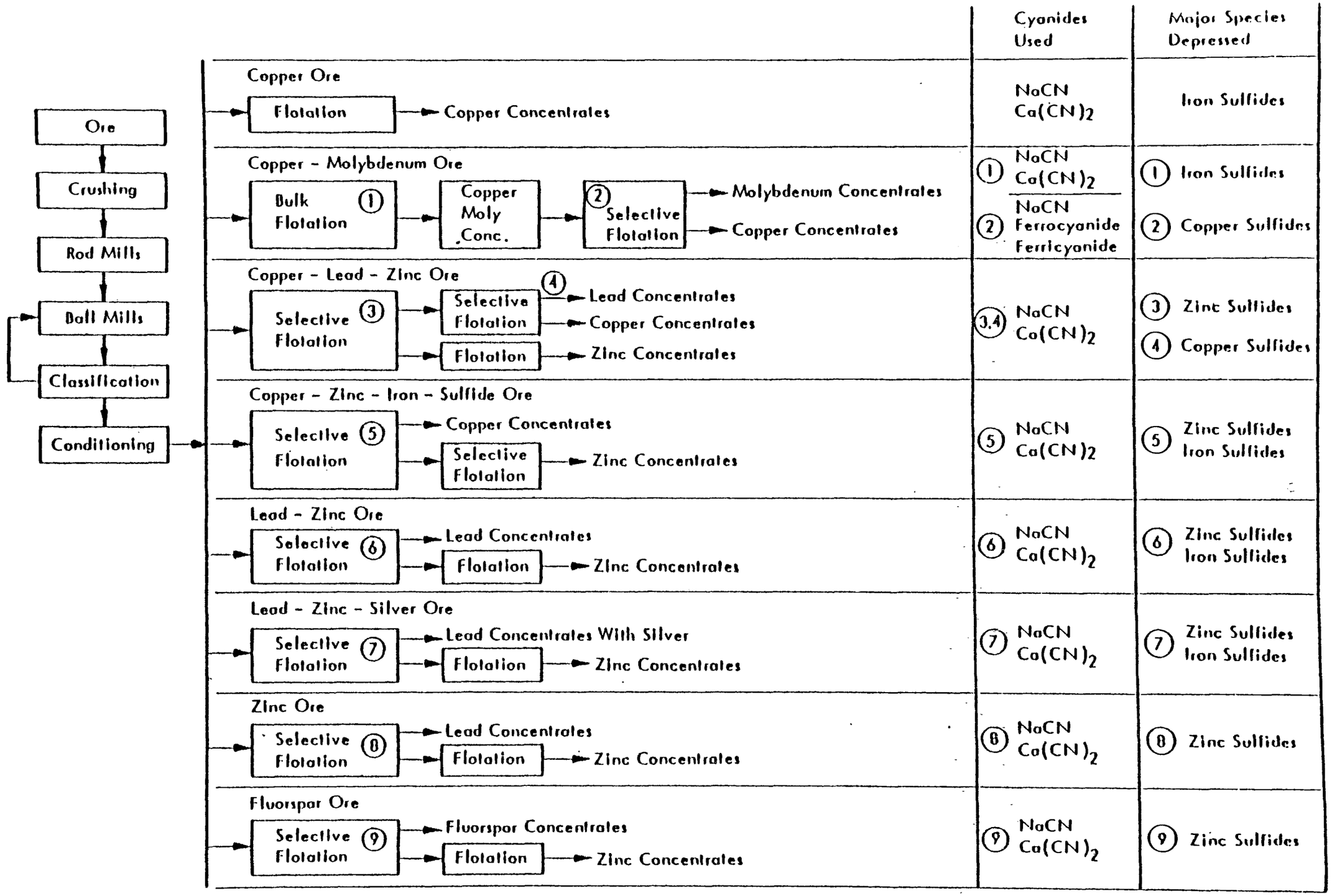

FIGURE I-5 GENERALIZED SELECTIVE FLOTATION PROCESS SCHEMATIC [1]

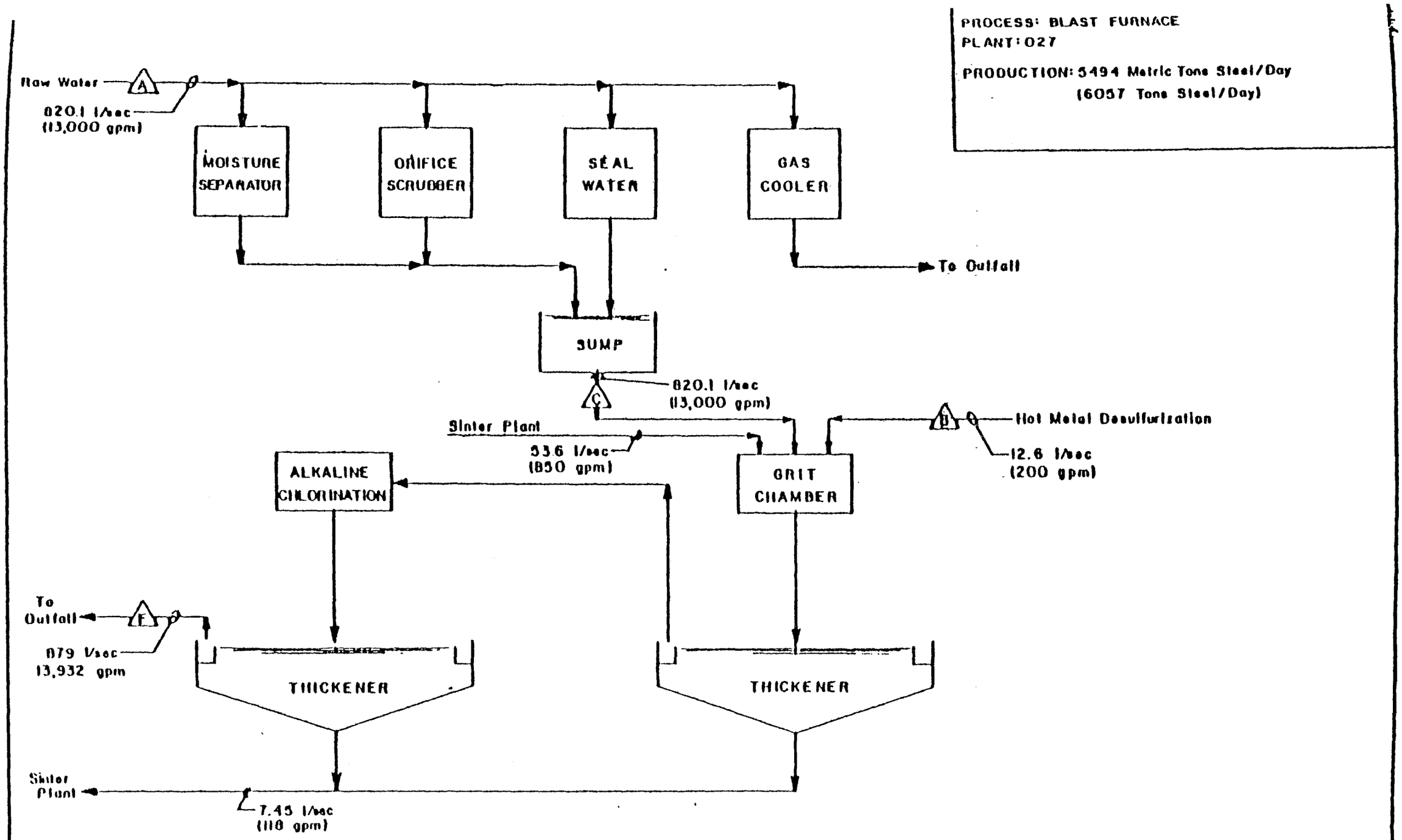

FIGURE I-6 CHLORINATION OF BLAST FURNACE CYANIDE WASTE[8]

Response To Comments

1. One commenter suggested that the listings of "Spent or waste cyanide solutions or sludges" should be modified so as ot to include solutions or sludges containing small amounts of cyanide formed during one or more proces operatins. The following language was recommended:

"Spent or waste cyanide solutions or sludges resulting from cyanide-based processes (R,T)"

°The Agency agrees with the commenter that solutions or sludges that contain minute quantities of cyanide should not and are not intended to be included in the above listing. However, to limit the listing to just those processes which result from cyanide-based processes may leave out several waste streams from RCRA control wich could present a problme, if improperly managed. For example, during blast furnace operations nitrogen, water and carbon combine to produce hydrogen cyanide. Desulfurization scrubbers installed on many of the blast furnace stacks scrub HCN scrubber liquor is rarely treated. Thus, if the scrubber liquor is dewatered, the cyanide is likely to end up in the sludge at concentrations high enough to be of concern (see discussion under Coke Oven and Blast Furnace, p. 15, for more details).

2. A number of comments suggested that the definition of cyanide bearing wstes should distinguish between "free cyanide" and "ferro cyanide", since the latter would not be available to gnerate hydrogen cyanide under mild, acidic, or basic conditions.

°The Agency agrees that only cyanide salt-containing wastes pose a reacivity hazard, and the listing descriptions reflect this distinction, since no complex cyanide wastes are listed for reactivity.

Wood Preserving

LISTING BACKGROUND DOCUMENT

WOOD PRESERVING

Wastewater from wood preserving processes that use creosote or pentachlorophenol (T)

Bottom sediment sludge from treatment of wastewaters from wood preserving processes that use creosote and/or pentachlorophenol (T)

I. Summary of Basis for Listing*

Wood preserving processes that use creosote or pentachlorophenol as preserving agents generate a wastewater, which contains toxic phenolic compounds including penta- and tetrachlorophenol, volatile organic solvents such as benzene and toluene, and polynuclear aromatic (PNA) components of creosote. Treatment of this wastewater results in the generation of a bottom-sediment sludge that must be removed for ultimate disposal. The Administrator has determined that wastewater from these wood preserving processes and the resulting bottom sediment sludge are solid wastes that may pose a substantial present or potential hazard to human health or the environment when improperly treated, stored, disposed of or otherwise managed, and therefore should be subject to appropriate management requirements under Subtitle C of RCRA.

---

*Based on available data, and in response to industry comment, the Agency has modified this listing. Waste streams from wood preserving processes using waterborne inorganic preservatives are not included in the listings of this document. However, although limited data is currently available on the sludges generated from these wood preserving processes (i.e., from work tanks, cylinders or storage tanks), the Agency plans to study these wastes in the future to determine whether they should also be listed.

This conclusion is based on the following considerations:

1) The wastewater generated from wood preserving processes using pentachlorophenol as a preservative and the sludge generated from the treatment of this wastewater will contain significant concentrations of toxic phenolic compounds and volatile organic solvents such as benzene.

2) The wastewater from wood preserving processes that use creosote and the sludges generated from the treatment of this wastewater will contain significant concentrations of toxic polynuclear aromatics components of creosote and volatile organic solvents such as toluene. Wastewater and resulting sludges from wood preserving operations that use both creosote and pentachlorophenol as preservatives will generate waste streams which contain all or most of the above contaminants.

3) Polynuclear aromatics, as a group, are known to be toxic, mutagenic, teratogenic and carcinogenic. Phenolics are toxic and, in some cases, bioaccumulative and carcinogenic substances. Benzene and toluene are relatively toxic, and benzene is a carcinogen.

4) Approximately 200,000,000 gallons of wastewater are generated annually. About 90 percent of this wastewater is treated by treatment methods which generate a bottom sediment sludge.

5) Treatment of wastewater in evaporation ponds or lagoons, could lead to the environmental release of hazardous constituents and result in substantial hazard via groundwater or surface water exposure pathways. Evaporation of wastewater in ponds, lagoons or by other treatment methods, if mismanaged, could lead to the release of hazardous constituents into the atmosphere and result in substantial hazard via an air exposure pathway.

6) Off-site disposal in landfills is the most commonly used disposal method for these sludges. This presents the possibility of the toxic components in the sludge migrating to nearby underground drinking water sources, if the landfill is improperly designed or operated.

7) The Agency has been informed that incineration is another (though less frequently used) disposal

method for these sludges. If improperly managed, incineration could result in the release of hazardous vapors to the atmosphere, presenting a substantial hazard via an air exposure pathway.

II. Sources of the Wastes and Typical Disposal Practices

A. Industry Profile and Manufacturing Process

There are approximately 415 wood preserving plants operated by about 300 companies in the United States. The plants are concentrated in two areas, the Southeast from east Texas to Maryland and along the Northern Pacific coast. These areas correspond to the natural ranges of the southern pine and Douglas fir-western red cedar, respectively (2).

Approximately 240 million cubic feet of wood are treated each year (1), principally for railroad ties, utility poles, and lumber for construction materials. Of the 250 million cubic feet of wood treated annually, it is estimated that approximately 85 percent is treated with creosote or pentachlorophenol based preservatives as shown in Table 1 (4). The total quantity of preservative consumed in 1975 during these treatment cycles is shown in Table 2.

B. Process Description

At plants using creosote or pentachlorophenol-based preservatives, wood products are treated by chemical processes to increase their resistance to natural decay, attack by

TABLE 1

VOLUME OF WOOD TREATED IN 1975 BY PRESERVATIVE (4)

Preservative Type		Quantity of Wood Treated (million cubic feet)
Oil Borne 85%		
	Creosote and creosote-coal tar	110.5
	Creosote-petroleum	32.1
	Creosote-pentachlorophenol	0.9
	Petroleum-pentachlorophenol	60.8
Waterborne 15%		
	Chromated copper arsenate (A,B,C)	29.9
	Fluor-chrome-arsenate-phenol	1.8
	Chromated zinc chloride	0.5
	Acid copper chromate	1.4
	All other preservatives	1.8

TABLE 2

QUANTITY OF PRESERVATIVES USED IN 1975.

LIQUIDS:

Creosote	96.3 million gallons (0.84 gal/cu ft)
Coal Tar	23.6 million gallons (added to above)
*Petroleum (with PCP)	48.7 million gallons (0.80 gal/cu ft)
*Petroleum (with creosote)	16.7 million gallons (0.52 gal/cu ft plus creosote)

SOLIDS:

Pentachlorophenol	35.5 million pounds (0.58 lb/cu ft plus petroleum)
Chromated Copper Arsenate	15.9 million pounds (0.55 lb/cu ft)
Other Solids (zinc, fluor, chromate, etc.)	4.5 million pounds (0.82 lb/cu ft)

*The petroleum listed in Table 2 acts as a dissolving and/or carrying medium for the preservatives with which they are used.

insects, micro-organisms, or fire. Briefly, the treatment consists of debarking, forming, drying, impregnation of preservative, and storage (3).

The two major wood preserving processes, producing large quantities of wastewater and sediment sludge, are called steaming and boultonizing.* Both these processes are pressure processes and differ mainly in the way the wood is conditioned before or during the application of the preservative. Figures 1a-1e present flow diagrams for the major wood preserving processes (Source: Reference 19).

Steaming is used principally on southern pines. In this process, the stock is normally steamed for 1 to 16 hours at about 120°C to reduce the wood's moisture content and render it more penetrable to preservatives. After steaming, the preservative is added to the same retort. Condensate removed from the retort after steaming is contaminated with entrained oils, organic compounds, and wood carbohydrates.

In the boulton process, used principally on Western Douglas fir, the wood is already immersed in the preservative, placed under vacuum, and then heated in the retort at approximately 100°C. The vapor removed is composed of water, oils, organic compounds and carbohydrates from the wood. Contaminated vapors from both the steaming and boultonizing processes are

*Vapor drying is another wood preserving process, also generating a wastewater and sludge of concern.

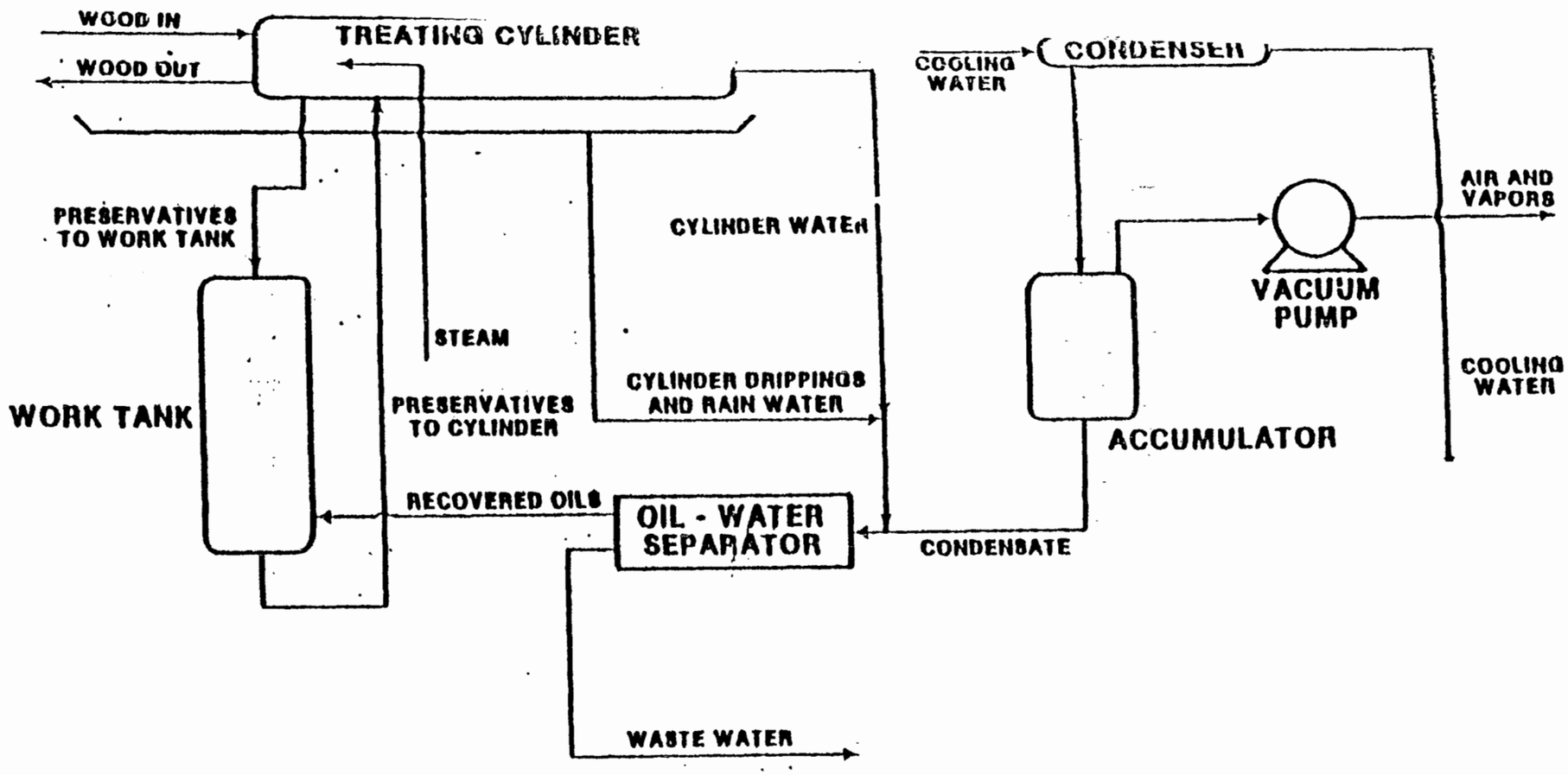

Figure 1a. OPEN STEAMING PROCESS WOOD TREATING PLANT

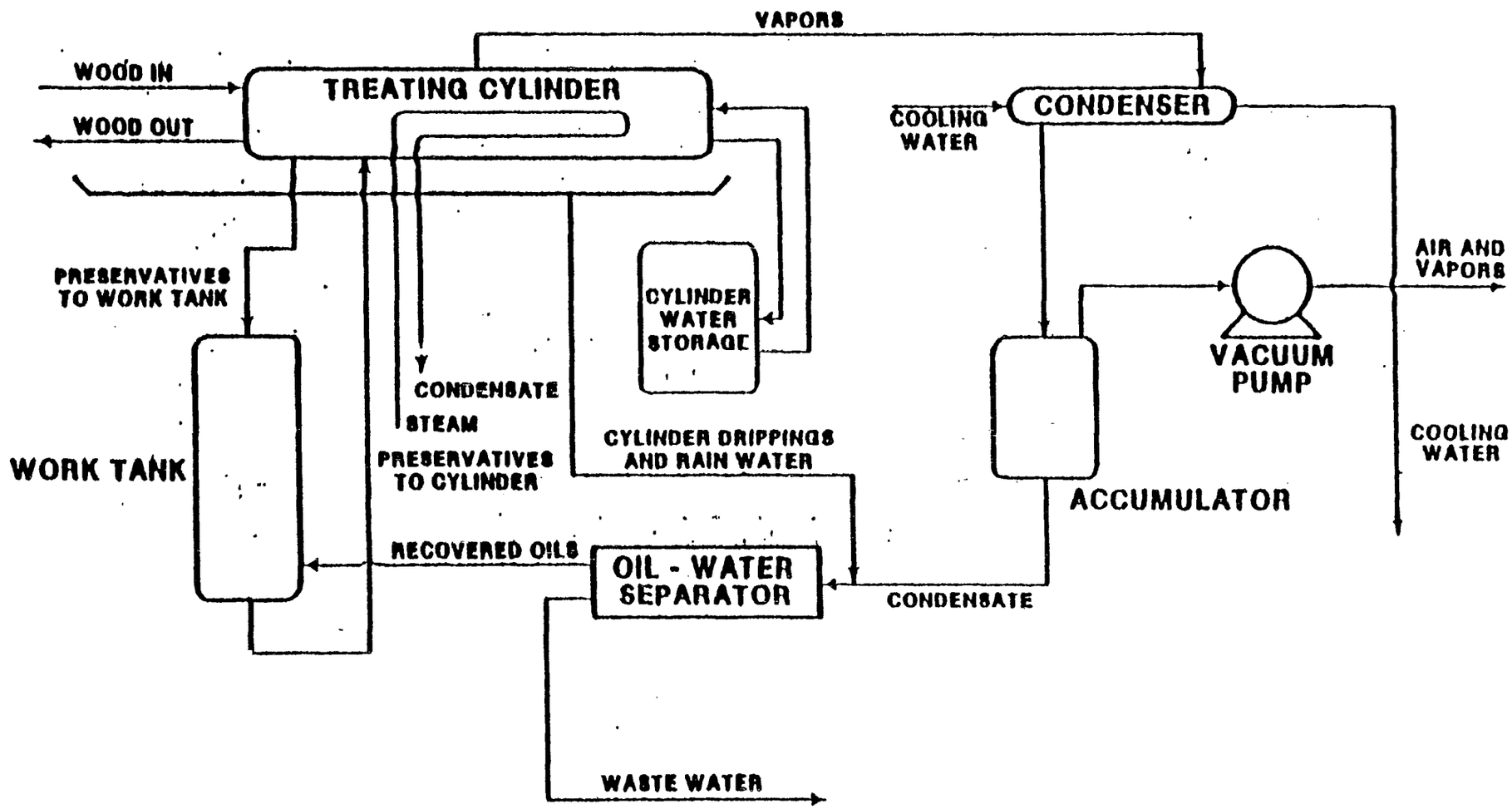

Figure 1b - **CLOSED STEAMING PROCESS WOOD TREATING PLANT**

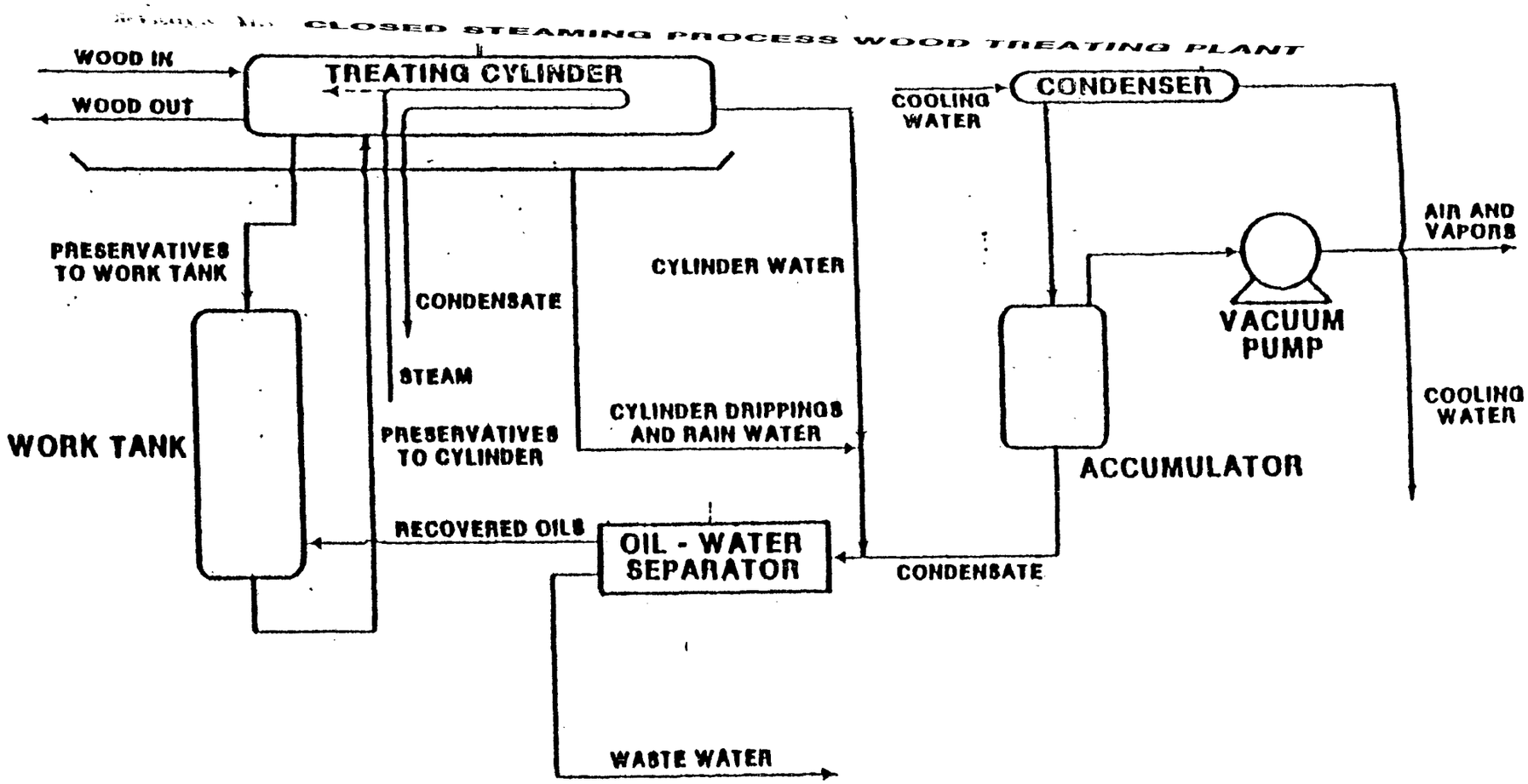

Figure 1c **MODIFIED STEAMING PROCESS WOOD TREATING PLANT**

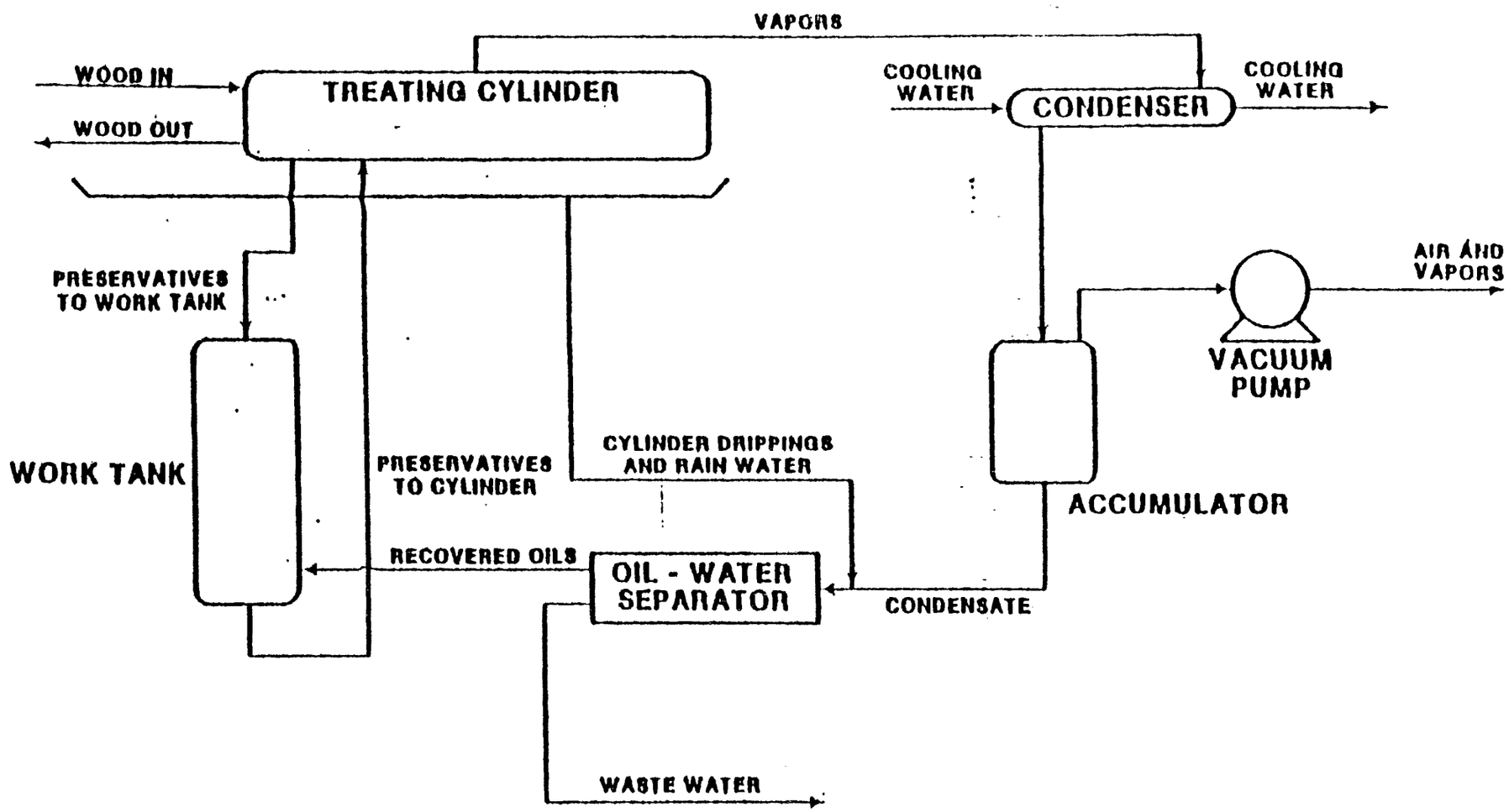

Figure 1d **BOULTON WOOD TREATING PLANT**

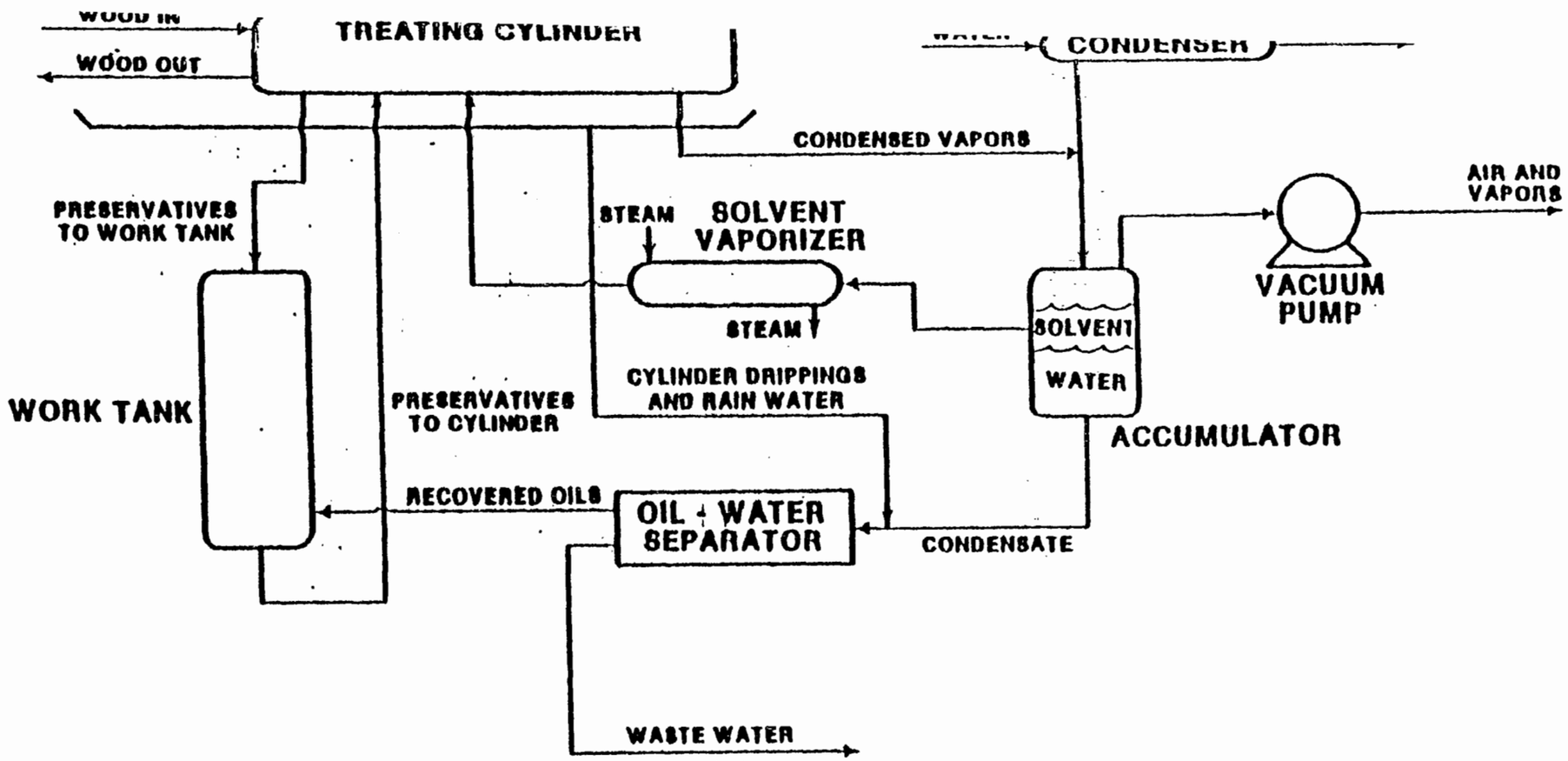

Figure 1e **VAPOR CONDITIONING PROCESS WOOD TREATING PLANT**

condensed and transported to an oil/water separator to reclaim any free oils and preserving chemicals before treatment and/or disposal of the wastewater, usually an oil/water emulsion.[17,18]

II. Generation, Composition, and Management of Listed Waste Streams (17,18)

A. Generation

Based on the quantity of wood treated with creosote or pentachlorophenol preservatives in 1975, and assuming that about one gallon of wastewater is generated per cubic foot of wood treated, approximately 200 million gallons of wastewater will be generated annually.

About 90% of this wastewater is treated by treatment methods that generted a bottom sediment sludge. The remaining wastewater is typically discharged directly, to POTW's. The listing covers both of these instances.*

Table 3 shows estimates of the amounts of sludges generated by creosote and pentachlorophenol preserving processes, and the amount of hazardous constituents contained in the wastes.

---

*The listing does not include wastewater discharged from a point source regulated under §402 of CWA. This listing also does not include any wastewater which is mixed with domestic sewage and that passes through a sewer system before it reaches a publiclyowned treatment works (POTW) for treatment. "Domestic Sewage" means untreated sanitary wastes that passes through a sewer system.

TABLE 3. POTENTIALLY HAZARDOUS SOLID WASTES FROM THE WOOD PRESERVING INDUSTRY (8)*

(Source: American Wood Preserver's Association (1979)

Total Process Solid Waste metric tons/yr	Total Potentially Hazardous Constituents metric tons/yr
Creosote-oil emulsion 230-930	Creosote 1.1-4.6
Penta-oil emulsion 600*	Pentachlorophenol 3.0

Note: Although these wastes are listed in the table in terms of amounts generated per year, many of the wastes are generated on a periodic basis which often can be as long as five years (8). Thus, the sludges may be allowed to sit at the bottom of wastewater treatment ponds for five years at a time.

*Estimated maximum amount.

B. Composition

Table 5 presents a list of some of the typical organic compounds found in wood treating plant wastewaters.* Bottom sediment sludge from wood preserving plants contains primarily creosote, polynuclear aromatics (creosote compounds), chlorinated phenols and volatile organic solvents such as toluene and benzene, as listed in Table 6.

According to data taken from California State hazardous waste manifests, (7) this waste may contain 5-20% pentachlorophenol.

EPA has tested samples of bottom sediment sludge and found that it contains polynuclear aromatic hydrocarbons and phenolic compounds. Many wood processing plants, such as the two listed below, may use both creosote and pentachlorophenol based processes and thus treat the wastewater generated by these processes in a combined treatment system. Thus, sludge samples from one plant may contain both creosote compounds and phenolic compounds. The pertinent information from two plant's sludge samples (Plants 10 and 11) is summarized below:**

---

*Approximately 125 wood preserving plants use both organic and inorganic preservatives. Although the systems are kept separate, cross contamination of chemicals may occur through exchange of dollies used to transport the wood and drippage from the inorganic into the organic operation. Thus, wastewater from organic wood treatment processes often contains inorganic materials.

**For details of sampling program and further information, see Reference 6.

TABLE 5. HAZARDOUS ORGANIC COMPOUNDS FOUND IN WOOD PRESERVING PLANT WASTEWATER.(17)

Using Pentachlorophenol	Using Creosote
Phenol	Toluene*
2,4-Dichlorophenol	Fluoranthene
2,4,6-Trichlorophenol	Naphthalene
4-Nitrophenol	1,2-Benzanthracene
4,6-Dinitro o-cresol	Chrysene
Tetrachlorophenol	
Pentachlorophenol	
Benzene*	

TABLE 6. HAZARDOUS ORGANIC COMPOUNDS FOUND IN WOOD PRESERVING PLANT BOTTOM SEDIMENT SLUDGE (17)

Creosote Polynuclear Aromatics
Benz(a)anthracene
Benzo(a)pyrene
Chrysene
Phenolics**
Phenol
2-chlorophenol
Pentachlorophenol
2,4-dimethylphenol
2,4,5-trichlorophenol

*Certain volatile compounds in the wastewater, such as toluene and benzene,may volatilize completely during the evaporation process and thus may not appear in the sludge.

**A test conducted on a cooling tower sludge at a plant treating with pentachlorophenol revealed the presence of octa-chlorodibenzo-p-dioxin as well as phenolics. The presence of this dioxin and the possibility of the presence of other more hazardous dioxins (such as TCDD) is of great concern to the Agency since various chlorinated dibenzo-dioxins are known carcinogens, mutagens and teratogens (IARC Monographs on the Evaluation of Carcinogens Risk of Chemicals to Man, Vol. 15).

However, the Agency is not listing these waste streams for the presence of these constituents until further information of the presence and fate of dioxins in the waste is made available.

Plant 10

Polynuclear Aromatics	Bottom Sediment Dry Weight (mg/kg)(6) Aerated Lagoon	Final Pond
Benz(a)anthracene	3,700	149
Chrysene	4,500	2,060
Phenolics		
Phenol	9,030	16,000
2,4-dimethylphenol	4,398	3,418
2-chlorophenol	396,000	1,200
2,4,6-trichlorophenol	No data	25,000
Pentachlorophenol	302,000	58,000

One sediment waste sample was taken from an aerated lagoon; the analytical data for this plant are summarized below:

Plant 11

Polynuclear Aromatics	Bottom Sediment Dry Weight (mg/kg)(6) Aerated Lagoon
Benzo(a)anthracene	1,250
Benzo(a)pyrene	5,980
Chrysene	9,280
Phenolics	
Phenol	4,500
2-chlorophenol	300
Pentachlorophenol	4,800

Additionally, a contractor/hauler that disposes of bottom sediment sludge for a wood treatment plant has provided an analysis of the waste for EPA (3). The analysis is as follows:

Component	Concentration, mg/l[6]
Total phenols	5,043
Pentachlorophenol	34
Dinitrophenol	24
Creosote	10,000

C. Typical Disposal Practices

These plants typically dispose of their wastewater streams by one of two treatment methods, namely evaporation or combined biological and irrigation process.

In the evaporation treatment process, water is evaporated off, leaving the bottom sediment sludge. Currently there are four prinicipal evaporative methods: still ponds, pan evaporators, stripper/cooling towers and spray ponds. All four methods produce bottom sediment sludge.

A still pond depends on the natural evaporation of water from the pond surface. A pan evaporator adds heat to the wastewater in order to accelerate evaporation. (In both cases, a sludge remains in the evaporation vessels.)

In a stripper/cooling tower, wastewater is pumped to the top of the tower and flows down slatted surfaces in contact with the air. Sludge accumulates in the base of the tower and is removed when its build-up hinders tower performance.

A spray pond uses a high-pressure pump and nozzle assembly to spray wastewater droplets into the air. The resulting large droplet surface area contacts the air, promoting evaporation. Again, the accumulated sludge remains in the pond.

When sufficient sludge residue has been accumulated, it is removed from the bottom of the evaporation device and transported to a dry bed. The sludge is typically disposed of in an off-site landfill (6).

The second (although less typical) method used by wood preserving plants is a combined biological and irrigation process. This process consists of (1) settling, (2) storage, (3) aerated treatment, (4) spray irrigation, and (5) runoff storage. Rainfall runoff water is collected in a storage pond, recycled through spray nozzles, and then bled into a settling basin for treatment. The wastewater flow at a particular plant equipped with this type of treatment system averaged approximately 50,000 gallons a day.[6] Wastewater flows from the settling basin to a storage pond, and then into an aerated lagoon. The wastewater remains in both the storage pond and the aerated lagoon for 40 to 60 days. From the aerated lagoon, the wastewater is intermittently pumped and sprayed through spray nozzles onto a planted field. Runoff from this field is collected in a runoff storage pond. Sludge is generated in this treatment system on the bottom of the aerated lagoon (6); typically the sludge is disposed in an off-site landfill.

The Agency, believes that incineration is another, though less frequently used, disposal practice for these sludges.

III. Discussion of Basis for Listing

A. Hazardous Properties of the Waste

As discussed earlier, the most commonly used wood preservatives are pentachlorophenol and creosote. The principal toxic pollutants in wastewater from plants that treat with these preservatives are phenolic compounds, volatile organic solvents such as benzene and toluene, and polynuclear aromatic hydrocarbon components of creosote.

Phenolics are toxic and, in some cases, bioaccumulative and carcinogenic. Polynuclear aromatics, as a group, are known to be toxic, mutagenic, teratogenic and carcinogenic. Benzene and toluene are relatively toxic, and benzene is a carcinogen.

B. Migratory Potential of Hazardous Constituents

In light of the extreme danger posed by these waste constituents, the Agency would require some assurance that these waste constituents will not migrate and persist to warrant a decision not to list these waste streams. No such assurance appears readily available.

Many of these waste constituents, in fact, have proven capable of migration, mobility and persistence. Chrysene, naphthalene, benz(a)anthracene, and benzene have been detected in rivers, demonstrating ability to persist. Naphthalene and benzene have been identified in finished

drinking water and wells, demonstrating ability to migrate to drinking water sources and to persist. (20)

The migratory potential and persistence of phenol, benzene, toluene, trichlorophenol and dichlorophenol is confirmed by the fact that these constituents have been identified in samples taken at the Love Canal site in Niagra, New York. Toluene and benzene have migrated from the Love Canal site into surrounding residential basements and solid surfaces, demonstrating ability to migrate through soils. Toluene, benzene and dichlorophenol have also been found in school and basement air at Love Canal, demonstrating ability to migrate and persist in the air. (See "Love Canal, Public Health Bomb, a Special Report to the Governor and Legislature", New York State Department of Health (1978).)

Studies on biodegradability* indicate that under specific idealized conditions, pentachlorophenol is biodegradable (9,10,11). Pentachlorophenol has been shown to be degradable

---

*Comments were received from industry that the Agency failed to take into consideration the biodegradability of waste constituents in listing wastewater sludges. This document now discusses biodegradability of constituents of wastewater and wastewater treatment sludge.

In addition, some comments were received stating that a hazardous waste designation would discourage biological treatment of wastewater. Where biological treatment, in fact, proves successful in degrading hazardous constituents, the delisting mechanism provides generators a means of avoiding hazardous waste status for their treatment sludges.

Furthermore, the Agency's legal obligation is to list wastes based on their potential to cause substantial harm if mismanaged, and the comment does not even challenge that such hazard may result. Finally, a hazardous waste designation may encourage biological treatment, since it may prove easier to obtain a permit for this type of waste management.

when composted in permeable soil at pentachlorophenol concentrations of 200 ppm or less. Under these conditions, at least 98% of the PCP can be destroyed in about 200 days (12). However, biodegradation is feasible only if the microorganisms have been acclimated to pentachlorophenol and the pentachlorophenol concentration is carefully controlled (13). As mentioned before, typical concentrations of pentachlorophenol in the sludge range from 5 to 20 percent or 5000 to 200,000 ppm, although concentrations as high as 302,000 have been reported (see p. 10). The sludge, therefore, would need to be combined with noncontaminated permeable soil in a ratio of 1:20 in order to ensure that the reported level of degradation at the disposal site is possible.

Furthermore, presence of harmful constituents in such high concentrations in sludge samples taken at two plants which treated wastewater with nutrient addition (see pp. 10-11)--with high concentrations being present at one plant in both the aerated lagoon and final retention pond--shows that the constituent may persist in these sludges even after biological treatment (i.e., won't fully biodegrade).

Studies on pentachlorophenol leaching have shown that water contamination from soil leaching is low (10,12). Also, this contaminant tend to be bound by the soil, limiting the possibility for migration (10,12). In one laboratory study on soils containing between 100 and 300 ppm pentachlorophenol, the leachate, due to an equivalent of 1/2 to 1 inch of rainwater,

contained less than 0.01 percent of the original pentachlorophenol in the soil (4). Again, however, these studies were conducted on soils with PCP concentrations well below the levels reported in the California State hazardous waste manifests, and, as noted above, phenolic compounds have demonstrated ability for mobility and persistence.

Creosote compounds have also demonstrated ability for mobility and persistence. An actual damage incident of surface and grounwater contamination due to improper management of creosote-containing wastes confirms the migratory potential, mobility and persistence of the waste constituents in these wastes. In the 1950's, waste chemicals including creosote and other types of wood preserving oils were injected into wells in Delaware County, Pennsylvania. The injected wastes migrated into groundwater, infiltrated a storm drain sewer, and discharged into a small stream, causing biological damage. Although injection of the wastes into the wells ceased in the 1950's, contamination was first observed in 1961.[21] Thus, the waste constituents proved capable of migration via both ground and surface waters, and were able to persist and cause damage for a long time.

Since large quantities of bottom sediment sludge containing such large concentrations of harmful constituents are

disposed of in landfills or sometimes allowed to accumulate at the bottom of ponds and lagoons for long periods of time, attenuative capacity of the environmental surrounding these facilities could be reduced or used up.

Finally, many of the constituents of concern are highly bioaccumulative in environmental receptors. Benz(a)anthracene and pentachlorophenol are extremely bioaccumulative with octanol/water partition coefficients of 426,579 and 102,000, respectively. Tetrachlorophenol, trichlorophenol and dichlorophenol are also highly bioaccumulative with octanol/water partition coefficients of 12,589, 4,169 and 1,380, respectively (App. B).* Thus, the possibility that waste constituents could accumulate in harmful concentrations if they reach a receptor further supports a hazardous waste listing.

In light of the above and of the extreme dangers to human health and the environment posed by these constituents, there is insufficient indication of environmental degradation and inability to migrate to justify a failure to list this waste as hazardous.

---

*An octanol/water coefficient of 100 means that after an aqueous solution of the test compound is intimately mixed with octanol and allowed to separate, there will be 100 times as much of the test compound in the octanol than in the water. Solubility of a substance in octanol models its solubility in body fat tissue and is, therefore, indicative of bioaccumulation potential.

C. Exposure Pathways

Mismanagement of these wastes, therefore, could lead to environmental contamination since constituents are available for release and persist following release. Thus, as previously noted, the wastewaters generated by wood preserving operations are typically treated by evaporation or by a combined biological and irrigation process. Bottom sediment sludge, generated by the treatment of the wastewater, is typically disposed of in an off-site landfill, although incineration is another possible disposal method.

The treatment of wastewater in ponds and/or lagoons, if mismanaged, could also lead to the release of hazardous constituents, particularly in light of these constituents' demonstrated propensity for migration. These waste constituents could thus contaminate groundwater if ponds or lagoons are unlined or lack adequate leachate collection systems. Siting of wastewater treatment facilites in areas with highly permeable soils could likewise facilitate leachate migration. The bottom sediment sludges, which form at the bottom of wastewater treatment ponds or lagoons, could thus release harmful constituents and contaminate groundwater. As previously noted, these sludges may be allowed to sit at the bottom of ponds for up to five years (8), thus increasing the potential for release of harmful constituents and for eventual groundwater contamination.

There is also a danger of migration into and contamination of surface water if ponds and lagoons are improperly designed or managed. Thus, inadequate flood control measures could result in washout or overflow of ponded wastes.

Disposal of bottom sediment sludge in an off-site landfill, if mismanaged, could also lead to release of hazardous constituents. The waste constituents of concern may migrate from improperly designed or managed landfills and contaminate ground and surface waters.

Transportation of these sludges off-site increases the liklihood of mismanagment and of their causing harm to human health and the environment. Mismanagement of sludges during transportation thus may result in hazard to human and wildlife through direct exposure to harmful constituents. Furthermore, absent of proper managment safeguards, the waste might not reach the designated disposal destination at all.

The harmful constituents in the waste also present a health hazard via an air inhalation pathway. Studies on actual pentachlorophenol and creosote process wastewater samples using a bench scale pan evaporator indicated that a large fraction of the organic constituents were entrained in the vapors given off during the treatment(18). Benzene and toluene have vapor pressures of 75.1 mm Hg @20°C and

28.4 mm Hg @25°C and are therefore likely to volatilize (App. B). Thus, evaporation of wastwaters in ponds, lagoons, stripper/cooling towers and evaporation pans could lead to the release of hazardous and volatile constituents into the air.

Disposal of sludges by incineration is another type of management which could lead to substantial hazard. Improper incineration might result in serious air pollution by the release of toxic fumes occurring when incineration facilities are operated in such a way that combustion is incomplete. These conditions can, therefore, result in a significant opportunity for exposure of humans, wildlife and vegetation, in the vicinity of these operations, to potentially harmful substances.

D. Hazards Associated with Constituents of the Waste

Phenolics are toxic and in some cases bioaccumulative and carcinogenic. Phenol, pentachlorophenol, 2,3,4,6-tetrachlorophenol, 2,4,6-trichlorophenol, and 2,4-dichlorophenol are given highly toxic ratings in N. Irving Sax's Dangerous Properties of Industrial Materials. 2,4,6-Trichlorophenol has been identified by the Agency as a compound exhibiting substantial evidence of being carcinogenic. In addition, 2,4,6-trichorophenol has been reported to be mutagenic, and pentachlorophenol has shown mutagenic and teratogenic effects.

Polynuclear aromatics, as a group, are known to be toxic, mutagenic, teratogenic and carcinogenic. Benzo(a)anthracene and chrysene have been identified by the Agency as compounds exhibiting substantial evidence of being carcinogenic. Benzene and toluene organic solvents, are relatively toxic, and benzene is a carcinogen. Additional information and specific references on the adverse effects of the following substances can be found in Appendix A:

*Benzene
*Benzo(a)anthracene
*Benzo(a)pyrene
*Chrysene
*Phenol
*2,4,6-Trichlorophenol
*Pentachlorophenol
*2-Chlorophenol
*4-Nitrophenol
*Toluene
*Naphthalene
4,6-Dinitro-o-cresol
Tetrachlorophenol
2,4-Dimethylephenol

*Starred compounds are designated as priority pollutants under Section 307(a) of the CWA.

References

1. Federal Register, Vol. 44, No. 212. Wednesday, October 31, 1979.

2. Development Document for Effluent Limitation. EPA: 440/1-74-023a.

3. Federal Register No. 202. Wednesday, October 18, 1978.

4. Ernst and Ernst. Wood Preservation Statistics. 1976. American Wood Preservers Association.

5. Nicholas. Wood Deterioration and its Prevention by Preservation Treatments. Syracuse University Press, Volume II, 1973.

6. Myers, L.H., et al. Indicatory Fate Study. EPA: 660/2-78-175. August, 1979.

7. Handbook of Industrial Waste Compositions in California. 1978

8. Multimedia Pollution Assessment of the Wood Products Industries, Edward C. Jordan Co., Inc., for Industrial Pollution Control Division, EPA Contract No. 68-03-2605, November, 1979.

9. Hartford, W.H., "The Environmental Impact of Wood Preservation," American Wood Preservers Association, 1976.

10. Young, A.L. et al, Fate of 2,3,7,8-tetrachlorodibenzo-p-dioxin (TCDD) in the Environment: Summary and Decontamination Recommendations, United States Air Force Academy, Colorado, USAFA-TR-76-18, October, 1976.

11. Kirsch, E.J., and J.E. Etzel. Microbial Decomposition of Pentachlorophenol, Journal of Water Pollution Control Federation, Vol. 45, No. 2, February, 1983.

12. Arsenault, R.D., "Pentachlorophenol and Contained Chlorinated Dibenzodioxins in the Environment--A Study of Envrionmental Fate, Stability, and Significance when Used in Wood Preservation." American Wod Preservers Association, 1976.

13. Proceedings: Technology Transfer Seminal on the Timber Processing Industry--March 10,11, 1977. Toronto, Ontario. EPS: 3-WP-78-1, January, 1978.

14. Crosby, D.G., et al. "Environmental Generation and Degradation of Dibenxodioxins and Dibenzofurans." Environmental Health Perspectives. September, 1973.

15. "Army Handling of Wood Preservative is Questioned", Louisville Courier Journal, October 8, 1979.

16. "Rep. Carter calls for Faster Research on Properties of Wood Preservative", Louisville Courier Journal, October 4, 1979.

17. Acurex Corporation, "Solid Waste from Wood Treating Processes - a Hazardous Waste Background Document", December 20, 1979.

18. Acurex Corporation, "Fate of Toxic Pollutants in the Wood Treating Industry".

19. Development Document for Effluent Limitations, EPA 440/1-79/023b.

20. Shakleford and Keith, "Frequency of Organic Compounds Identified in Water," EPA-600/4-76-062, Environmental Research Laboratory, Athens, Ga., Dec. 1976.

21. Damage Incident, U.S. Environmental Protection Agency, open file, unpublished data.

Inorganic Chemicals

LISTING BACKGROUND DOCUMENT

Chromium Pigments and Iron Blues

Wastewater treatment sludge from the production of chrome yellow and orange pigments (T)

Wastewater treatment sludge from the production of molybdate orange pigments (T)

Wastewater treatment sludge from the production of zinc yellow pigments (T)

Wastewater treatment sludge from the production of chrome green pigments (T)

Wastewater treatment sludge from the production of chrome oxide green pigments (anhydrous and hydrated) (T)

Wastewater treatment sludge from the production of iron blue pigments (T)

Oven residue from the production of chrome oxide green pigments (T)

Summary of Basis for Listing

The above listed wastewater treatment sludges are generated when wastewaters from chromium pigments production are treated to remove heavy metals. Oven residue from hydrated chromic oxide manufacture is generated when the raw materials are heated together to form the pigment product. The Administrator has determined that these wastewater treatment sludges and oven residues are solid wastes which may pose a substantial present or potential hazard to human health or the environment when improperly transported, treated, stored, disposed of or otherwise managed and therefore should be subject to appropriate

management requirements under Subtitle C of RCRA. This conclusion is based on the following considerations:

1. These wastewater treatment sludges contain substantial amounts of the toxic heavy metals lead or chromium (and often both) and also contain ferric ferrocyanide when iron blue pigments are produced. The oven residue contains a substantial amount of chromium.

2. If these wastes are managed improperly, toxic chromium and lead may leach from the waste and migrate to the environment. Ferrocyanide will decompose upon exposure to sunlight, releasing cyanide and hydrogen cyanide gas.

3. A significant quantity of these sludges is generated annually, and the amount is expected to increase. When industry wastewater treatment standards based on best practicable technology are implemented, approximately 4300 metric tons of sludge will be generated per year. Currently 50-60% of that amount is generated.

4. These wastes are frequently disposed of in unlined lagoons and landfills, or dumped in the open. These management practices may not be adequate to prevent toxic constituents from being released to the environment.

Profile of the Industry (1,2)

Chrome pigments are used extensively in paints, printing ink, floor covering products and paper. They may also be used in ceramics, cement and asphalt roofing. Eleven plants currently manufacture chromium pigments; two also manufacture iron blue pigments. Individual plant production rates range from a low of 9 metric tons per day to a high of 79 metric tons per day. Total yearly industry-wide production is estimated at 64,500 metric tons; approximately 60% of that total is manufactured by two plants in the northeastern United States. All other plants are located in the midwest and south.

Manufacturing Processes

1. Manufacture of Chrome Yellow and Orange Pigments

Chrome yellow and orange pigments are produced by reacting sodium dichromate, caustic soda and lead nitrate as follows (1):

(a) $2HNO_3 + PbO \longrightarrow Pb(NO_3)_2 + H_2O$

(b) $Na_2Cr_2O_7 + 2NaOH + 2Pb(NO_3)_2 \longrightarrow 2PbCrO_4 + 4NaNO_3 + H_2O$

Lead chromate is formed as a precipitate and is recovered by filtration, then treated, dried, milled and packaged. The filtrate, containing lead and chromium compounds, is sent to a wastewater treatment facility. A process flow diagram is given in Figure 1 (3).

2. Manufacture of Molybdate Orange Pigments

Molybdate orange pigment is made by the co-precipitation of lead chromate ($PbCrO4$) and lead molybdate ($PbMoO_4$). Molybdic oxide is first dissolved in aqueous sodium hydroxide; sodium chromate is then added. This solution is mixed and reacted with a solution of lead oxide in nitric acid. The reactions proceed as follows (1):

a. $MoO_3 + 2NaOH \longrightarrow Na_2MoO_4 + H_2O$

b. $PbO + 2HNO_3 \longrightarrow Pb(NO_3)_2 + H_2O$

c. $Na_2MoO_4 + Pb(NO_3)_2 \longrightarrow PbMoO_4 + 2NaNO_3$

d. $Na_2CrO_4 + Pb(NO_3)_2 \longrightarrow PbCrO_4 + 2NaNO_3$

e. $PbMoO_4 + PbCrO_4 \longrightarrow PbCrO_4 \cdot PbMoO_4$

The precipitate is filtered, washed, dried, milled and packaged. The filtrate, containing lead and chromium compounds, is sent to the wastewater treatment facility. A flow diagram is given in Figure 2 (3).

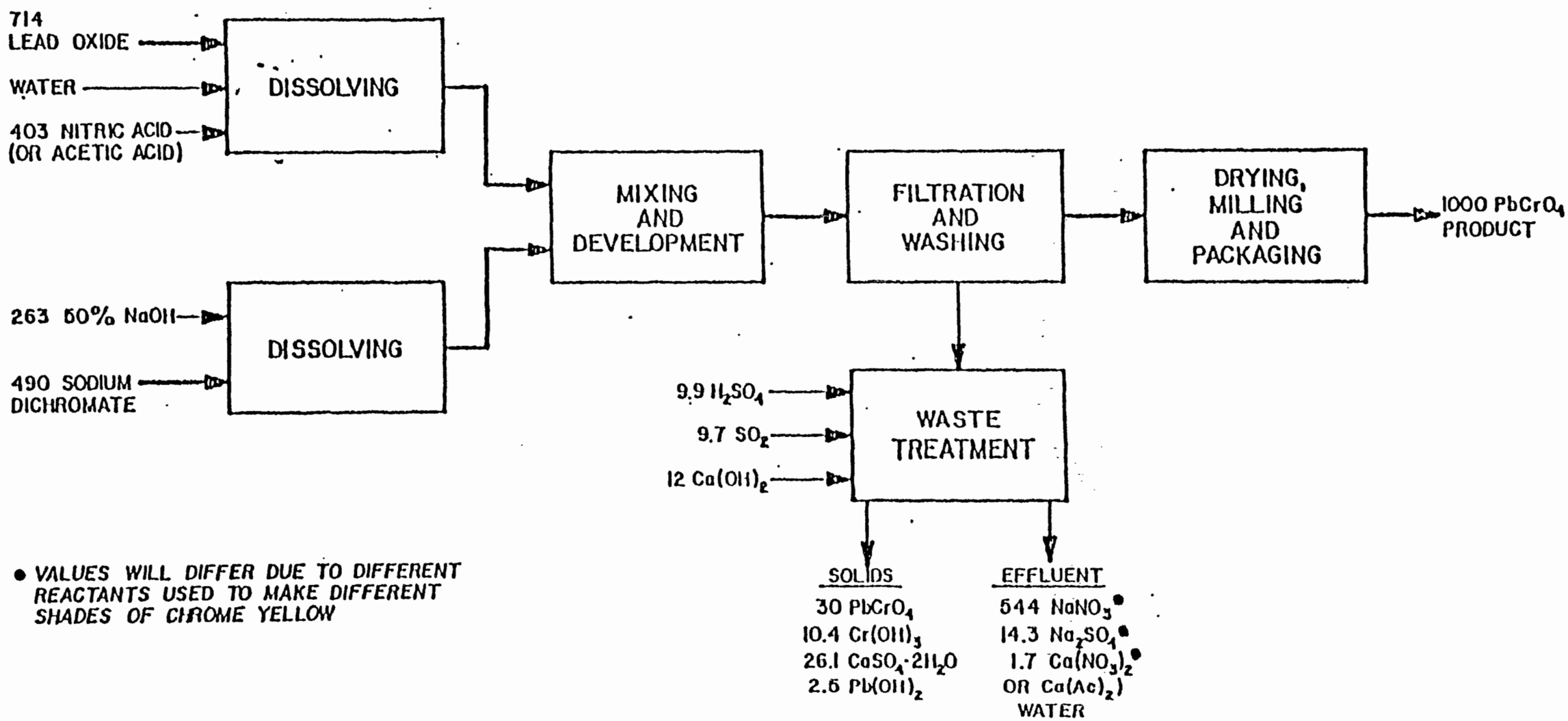

• *VALUES WILL DIFFER DUE TO DIFFERENT REACTANTS USED TO MAKE DIFFERENT SHADES OF CHROME YELLOW*

FIGURE 1
CHROME YELLOW MANUFACTURE

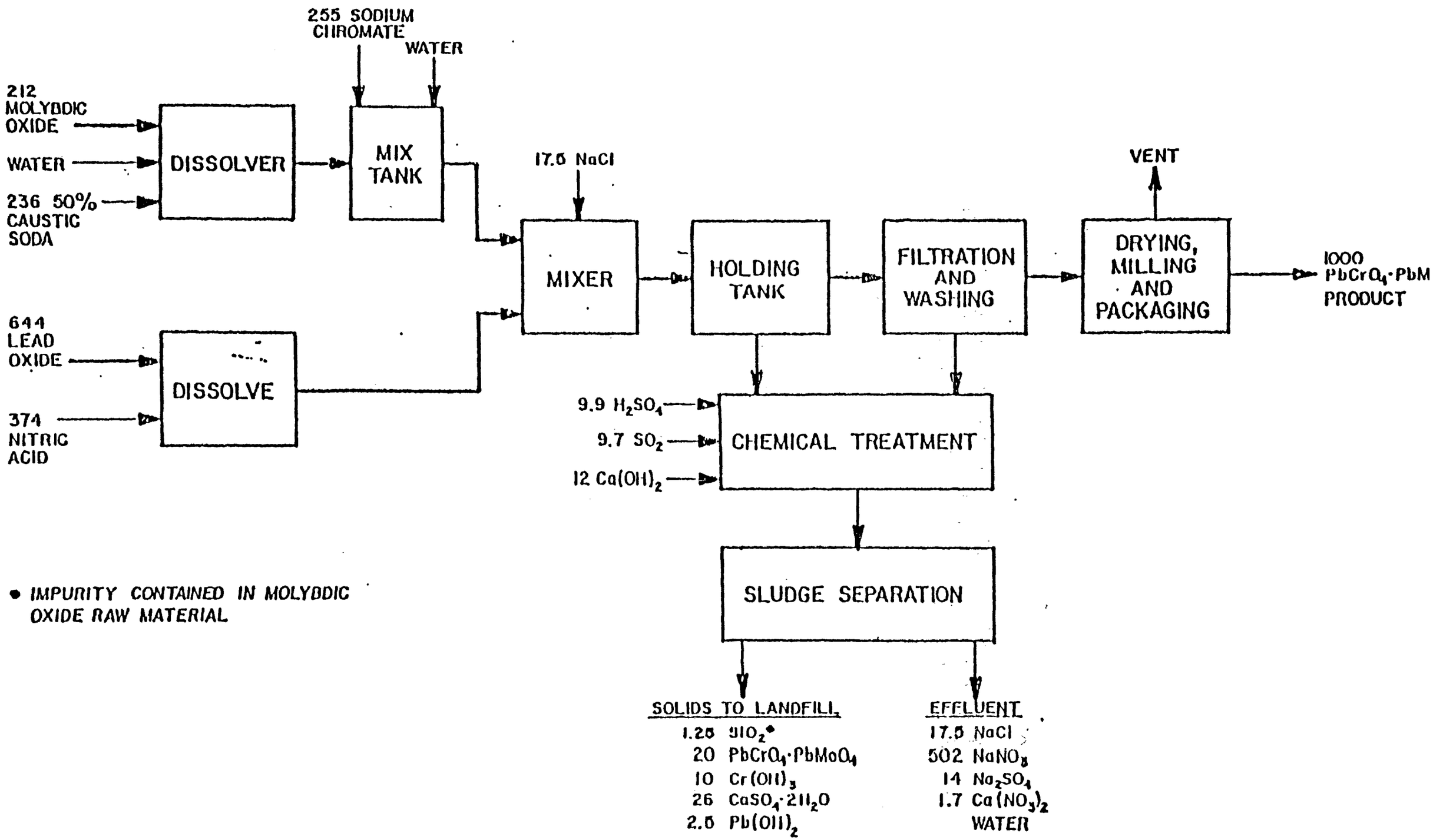

• *IMPURITY CONTAINED IN MOLYBDIC OXIDE RAW MATERIAL*

FIGURE 2
MOLYBDATE ORANGE MANUFACTURE

3. Manufacture of Zinc Yellow Pigments

Zinc yellow pigment is a complex compound of zinc, potassium and chromium. It is produced by the reaction of zinc oxide, hydrochloric acid, sodium dichromate and potassium chloride (1):

a. $2KCL + 2HCl + 2Na_2Cr_2O_7 \cdot H_2O \longrightarrow K_2Cr_4O_{13} + 4NaCl + 3H_2O$

b. $4ZnO + K_2Cr_4O_{13} + 3H_2O \longrightarrow 4ZnO \cdot K_2O \cdot 4CrO_3 \cdot 3H_2O$

The product forms as a precipitate and is filtered, washed, dried, milled and packaged. The filtrate, containing chromium, is sent to the wastewater treatment facility. A flow diagram is given in Figure 3 (3).

4. Manufacture of Chrome Green Pigments

Chrome green pigments are co-precipitates of chrome yellow and iron blues. They include a wide variety of hues, from very light to very dark green. Chrome green is produced by mechanically mixing chrome yellow and iron blue pigments in water. The coprecipitate formation of chrome green is given by the following reaction (1):

(1) $PbCrO4 + Fe(NH_4)[Fe(CN_6)] \longrightarrow PbCrO_4Fe(NH_4)[Fe(CN)_6]$

The co-precipitate is filtered, dried, ground, blended and packed. The filtrate, containing lead and chromium, is sent to wastewater treatment for removal of suspended pigment particles. Figure 4 gives a process flow diagram for the manufacture of chrome green (3).

5. Manufacture of Anhydrous and Hydrated Chrome Oxide Green Pigments.

Anhydrous chrome oxide is produced by the calcination

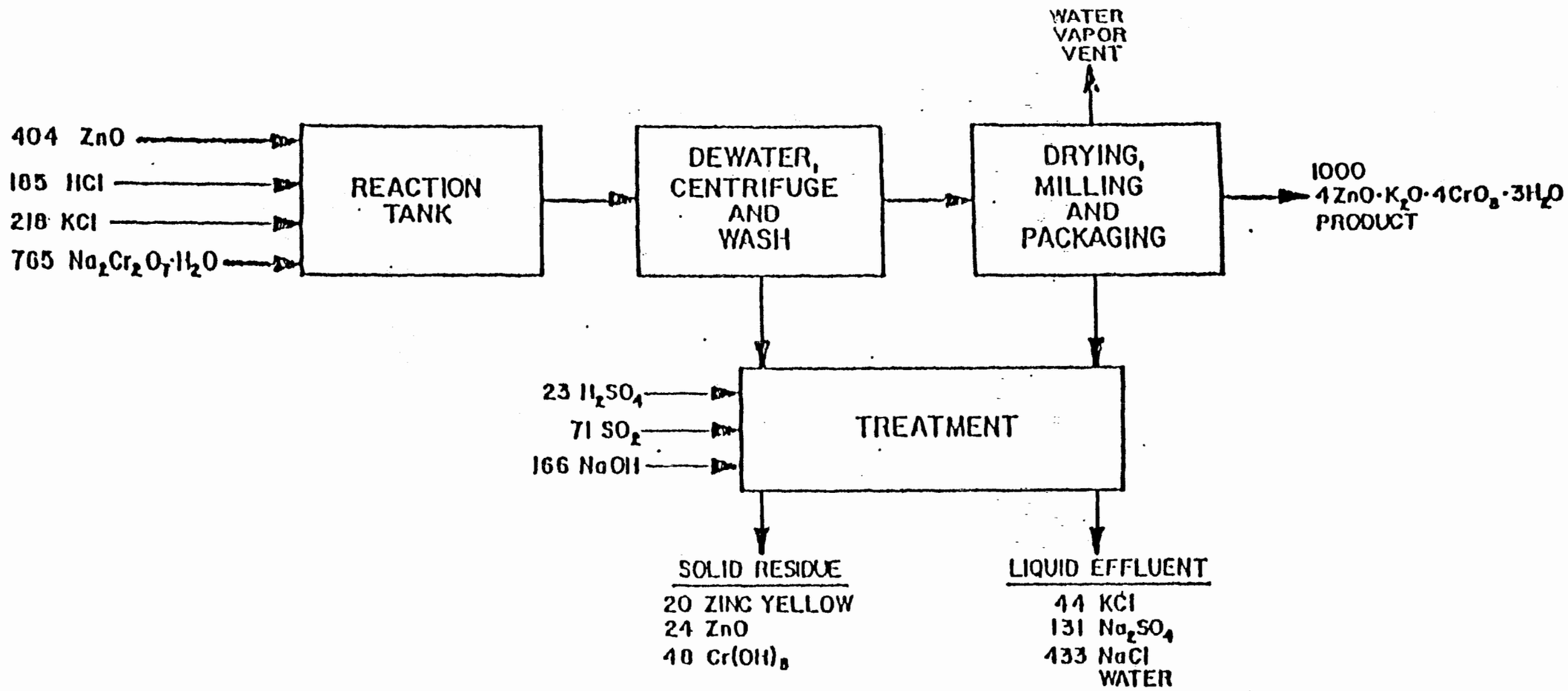

FIGURE 3
ZINC YELLOW MANUFACTURE

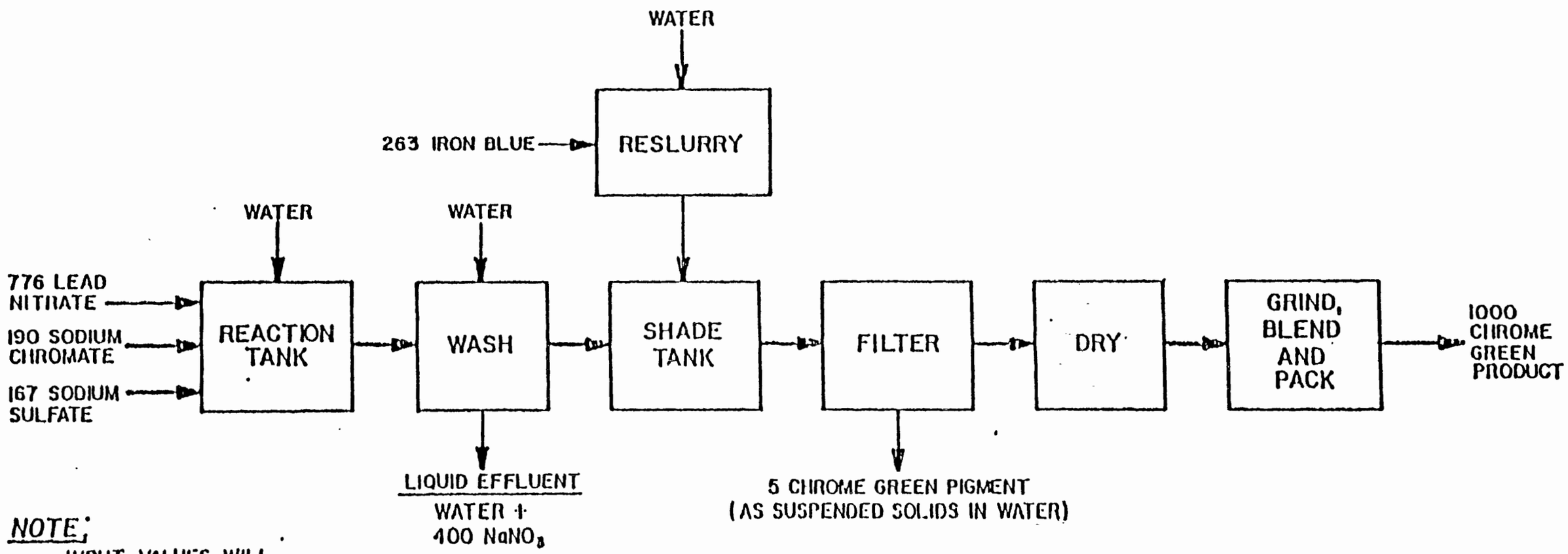

NOTE:
INPUT VALUES WILL VARY DEPENDING ON SHADE OF GREEN DESIRED.

FIGURE 4
CHROME GREEN MANUFACTURE

-8L1-
-86-

of sodium dichromate with sulfur or carbon according to either of the following reactions (1):

a. $Na_2Cr_2O_7 + S \longrightarrow Cr_2O_3 + Na_2SO_4$

b. $Na_2Cr_2O_7 + 2C \longrightarrow Cr_2O_3 + Na_2CO_3 + CO$

The recovered oxide is slurried with water, filtered, washed, dried, and packaged. The washwaters, containing a chromium compound, are sent to wastewater treatment. A process flow diagram is given in Figure 5 (3).

Hydrated chrome oxide is made by reacting sodium dichromate with boric acid as follows (1):

$$2Na_2Cr_2O_7 + 8H_3BO_3 \longrightarrow 2Cr_2O_3 \cdot 2H_2O + 2Na_2B_4O_7 + 8H_2O + 3O_2$$

The raw materials are blended in a mixer, then heated in an oven at 550° C. Oven residues, which contain chromium, remain to be disposed of as wastes. The reacted material is slurried with water and filtered. The filtered solids are washed, dried, ground, screened and packaged. The filtrate and washwater are treated to recover boric acid. The waste stream from the boric acid recovery unit and washwaters from the filtration step, containing a chromium compound, are sent to wastewater treatment. A process flow diagram is given in Figure 6 (3).

G. Manufacture of Iron Blue Pigments

Iron blue pigments are produced by the reaction of sodium ferrocyanide with an aqueous solution of iron sulfate and ammonium sulfate. The precipitate formed is separated and oxidized with sodium chlorate or sodium chromate to form

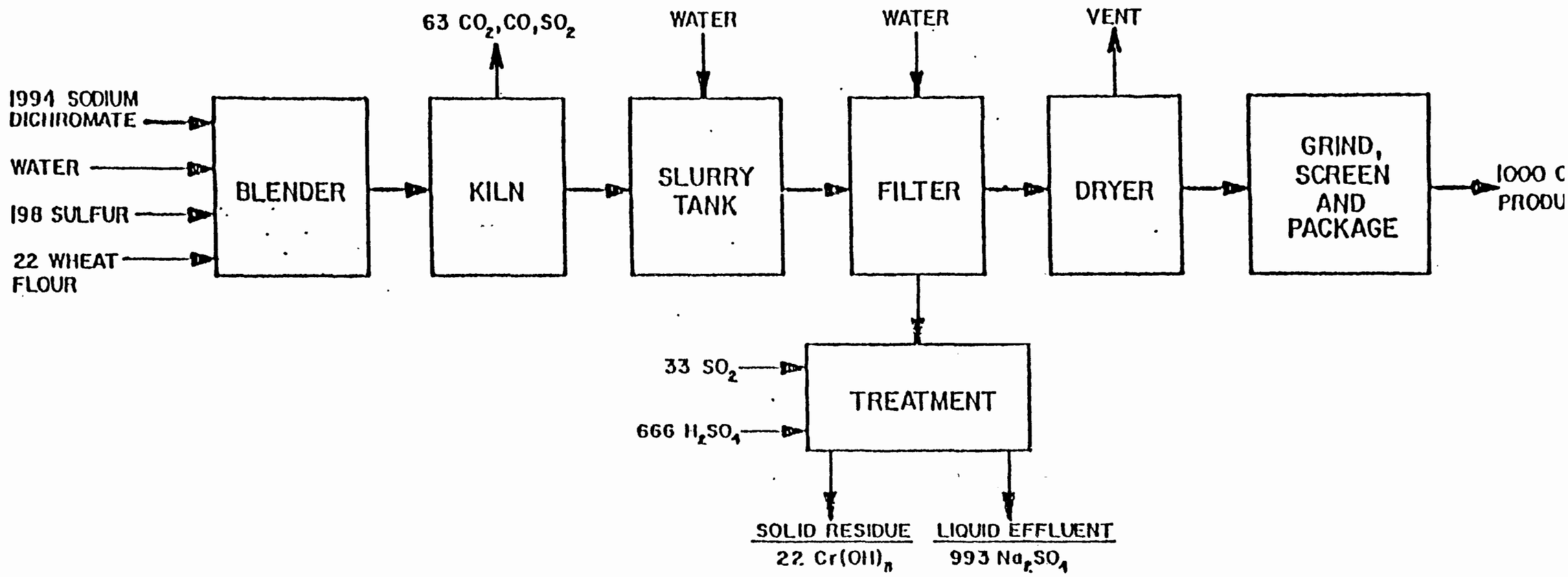

FIGURE 5
ANHYDROUS CHROMIC OXIDE PIGMENT MANUFACTURE

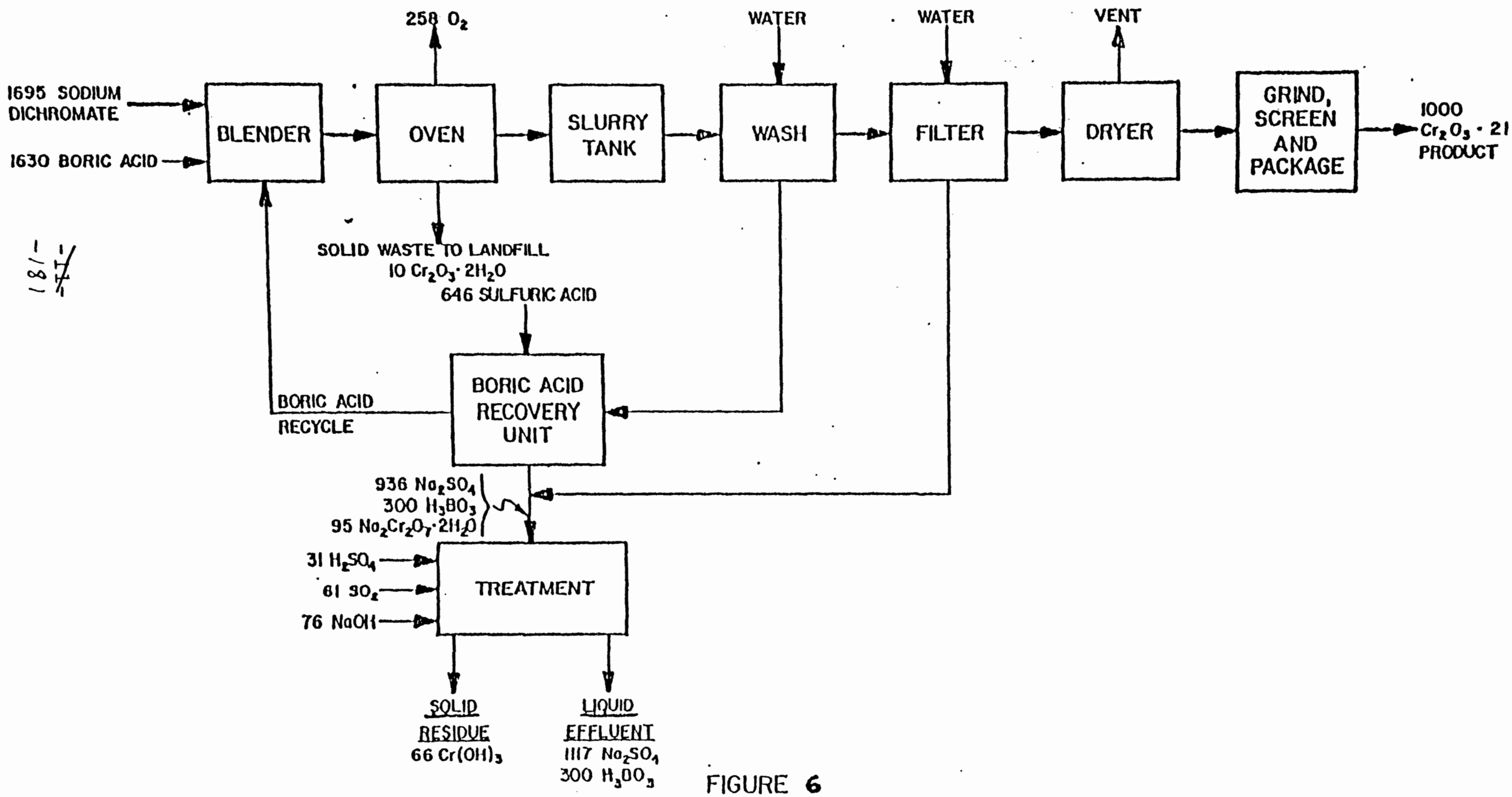

FIGURE 6

HYDRATED CHROMIC OXIDE MANUFACTURE

181-77-1

iron blues ($Fe(NH_4)[Fe(CN)_6]$). The product is filtered, dried and packaged as shown in Figure 7. The filtrate, containing ferric ferrocyanide (and chromium when sodium chromate is used as an oxidizing agent) is sent to wastewater treatment.

Waste Generation and Composition

Some plants produce different pigments in sequence, while others manufacture several pigments concurrently and combine the wastewaters for treatment at a single facility. Wastewater treatment generally involves precipitation of heavy metals with lime or caustic soda. This process generates a sludge containing heavy metal hydroxides and pigment particles. The sludge also contains ferric ferrocyanide if iron blues are produced, due to the reaction of feedstock materials. The remaining listed hazardous waste, oven residue from the production of hydrated chrome oxide green pigments, is generated when sodium dichromate and boric acid are heated to form the pigment product. A chromium-containing compound is found in the oven residue as a result of chromium in the feed material.

The composition of the wastewater treatment sludge from chromium pigments production is dependent upon the pigments which are being manufactured, as shown in Table 1 below, and whether wastes from multi-process plants are combined for treatment. With regard to the waste constituents of regulatory concern, chromium is usually present and lead may also be found. Ferric ferrocyanide is a component of the sludge when iron blues are produced. Table 1 lists the chromium, lead and cyanide-containing compounds in the respective sludges, and their amounts relative to the amount of the sludges.

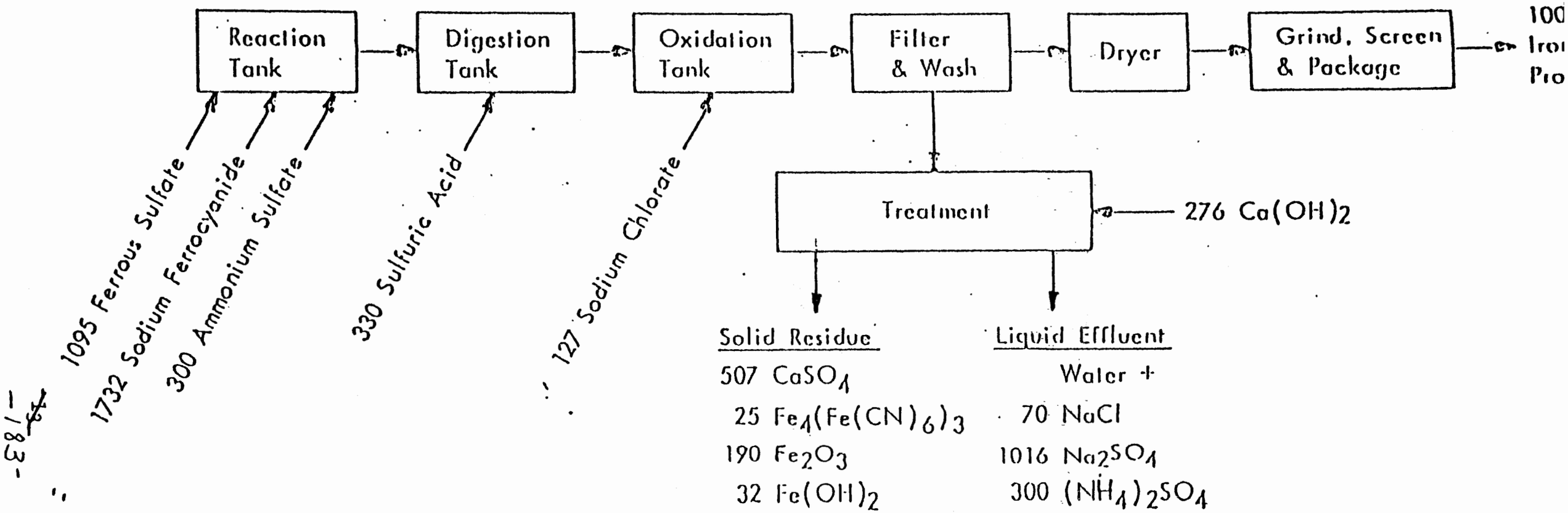

FIGURE 7 IRON BLUE MANUFACTURE

TABLE 1

Composition of Wastewater Treatment Sludge and Oven Residue from Chromium Pigments Production

Source of Sludge	Mass Units of Contaminants in sludge per 1000 Mass Units of Product
Production of Chrome Yellow and Orange Pigments	30 $PbCrO_4$ (Lead chromate) 10.4 $Cr(OH)_3$ (Chromium hydroxide) 2.5 $Pb(OH)_2$ (Lead hydroxide)
Production of Molybdate Orange Pigments	20 $PbCrO_4 . PbMoO_4$ (Molybdate Orange 10 $Cr(OH)_3$ (Chromium hydroxide) 2.5 $Pb(OH)_2$ (Lead hydroxide)
Production of Zinc Yellow Pigments	20 $4ZnO.K_2O.4CrO_3.3H_2O$ (Zinc Yellow) 48 $Cr(OH)_3$ (Chromium hydroxide)
Production of Chrome Green Pigments	5 $PbCrO_4Fe(NH_4)[Fe(CN)_6]$ (Chrome Gree
Production of Anhydrous Chromic Oxide Pigments	22 $Cr(OH)_3$ (Chromium hydroxide)
Production of Hydrated Chromic Oxide Pigments	66 $Cr(OH)_3$ (Chromium hydroxide)
Production of Iron Blue Pigments	25 $Fe_4(Fe(CN)_6)_3$ (Ferric Ferrocyanide
Oven Residue from Production of Chromic Oxide Pigments	10 $Cr_2O_3.2H_2O$ (Chromium Oxide)

* Note: Iron blue wastewater treatment sludge will contain chromium compounds when sodium chromate is used as an oxidizing agent. Generators, should they seek to delist their iron blue waste streams should thus address chromium concentrations as well as cyanide concentrations in their wastes.

The Agency lacks data on the precise concentrations of hazardous constituents in the sludges. These concentrations, however, are believed to be substantial. Data indicates that wastewaters from all chromium pigments plants accumulate 8,450 lbs. of chromium, 2,538 lbs of lead and 157 lbs of cyanide per day (2). Because treatment of the wastewaters is effected by consolidation of contaminants in sludge, the sludge is expected to contain much higher concentrations of those contaminants. Moreover, as shown by the material balances indicated on Figures 1-7 above, chromium and lead-containing compounds are significant constituents of the sludge, and thus obviously are present in substantial concentrations.

Furthermore, the amount of sludge generated is quite substantial. The Agency estimates that approximately 2100 to 2600 metric tons of sludge are currently generated per year by treatment of wastewaters from the manufacture of chromium pigments (4). The amount of wastewater treatment sludge is expected to increase significantly in the near future. Treatment standards based on Best Practicable Technology (BPT) are being developed for the chromium pigments industry, and compliance will result in removal of at least 95% of the chromium and lead from the wastewaters. Using current production figures, the Agency estimates that about 4300 metric tons per year (dry weight) of sludge will be generated by the industry when BPT standards are implemented (1).

EPA solicits information on the composition of wastewater treatment sludges and concentrations of hazardous constituents in extracts of those samples. The Agency emphasizes, however, that hazardous constituent amounts in these sludges appear to be sufficiently high to be of regulatory significance.

Current Waste Management Practices

A report done by the Versar Corporation in 1975 indicates that, at that time, eight companies manufacturing chromium pigments disposed of their wastewater treatment sludge on land (3). Two companies disposed on-site, one by ponding and the other by landfill after treatment. Six companies disposed off-site, one to a municipal landfill, one to a land dump and four to private landfills. Another company discharged to the sewer and one claimed to recover its wastes.(3)

Hazards Posed By These Wastes

These wastes may pose a substantial threat to human health and the environment if the hazardous constituents are released to the environment, and environmental release may occur as a result of waste mismanagement. Lead and chromium occur in pigment particles and as hydroxides in the sludge and may be solubilized if the wastewater treatment sludges are improperly managed. Solubilization of the lead and chromium hydroxides is pH-dependent and will increase as the pH of the solubilizing medium decreases.(3) If the sludges are exposed to acidic conditions (which might occur due to co-disposal with waste acids, or in municipal landfills or

in areas where acid rain is prevalent), the toxic heavy metals could be released from the waste matrix. Furthermore, lead hydroxide, if present in sufficient quantities, is soluble enough in water alone to exceed the National Interim Primary Drinking Water Standard of 0.05 mg/l (5). Although chromium hydroxide is relatively insoluble in water, its solubility is enhanced in the presence of chloride ions.(3) Chloride ions are common in the environment and would almost certainly be found in many landfills, increasing the likelihood that chromium could be leached by water from chromium hydroxide containing wastes.

Water is likely to come into contact with the waste in several ways. Open dumping or improper management of a landfill may permit percolation of rainwater through the waste pile or allow surface run-off to solubilize hazardous constituents. Placement of the waste below the water table could result in leaching of the lead and chromium by groundwater. Clearly, wastes that require ponding are already in contact with a substantial amount of liquid, which could encourage leaching or form a head, facilitating leachate migration to groundwater. If control practices are nonexistent or inadequate, contaminant-bearing leachate, run-off or impoundment overflow may reach ground and surface waters, polluting valuable water supplies for a considerable period of time.

Wastewater treatment sludges from iron blues production

may release cyanides to air or groundwater and thus also create a substantial hazard if improperly managed. Ferric ferrocyanide itself has little migratory potential. It is insoluble in water and has been observed to be quite immobile in soil column studies (Appendix A). Ferrocyanides, however, undergo decomposition upon exposure to sunlight, releasing cyanide and hydrogen cyanide gas. Once released from the matrix of the waste, hydrogen cyanide gas will volatilize and enter the atmosphere. Cyanide, once released, appears to be fairly mobile in soils (Appendix A). Even clay liners beneath a disposal site might not impede cyanide migration significantly; in the presence of water, montmorillonite clays sorbed cyanide weakly (6). Cyanide thus is capable of migrating from the waste disposal site to ground and surface waters.

Should lead and chromium escape from the disposal site, they will not degrade with the passage of time, but will continue to provide a potential source of long-term contamination. Lead can be bioaccumulated and passed along the food chain but not biomagnified.

The Agency has determined to list chromium pigments and iron blues as T hazardous wastes on the basis of lead, chromium, and ferrocyanide constituents (for iron blues), although two of these constituents are also measurable by the EP extraction procedure toxicity characteristic. There are other factors (in addition to those measured by the EP toxicity characteristic)

which justify the T listing. Some of these factors already have been identified, namely the non-degradability of these substances, indications of lack of proper management of the wastes in actual practice and the presence of ferrocyanide as a waste constituent in iron blues. The quantity of these wastes generated is an additional supporting factor.

As indicated above, wastes from the production of chromium pigments and iron blues are generated in very substantial quantities and the amount generated will increase. Each waste contains substantial amounts of lead, chromium, or ferrocyanides, and several wastes contain more than one of these contaminants. (see Table 1, p. 8 above). Large amounts of each of these contaminants are thus available for potential environmental release. These large quantities pose the danger of polluting large areas of ground or surface waters. Contamination could also occur for long periods of time, since large amounts of pollutants are available for environmental loading. Attenuative capacity of the environment surrounding the disposal facility could also be reduced or exhausted by large quantities of pollutants released from the waste.

All of these considerations increase the possibility of exposure to the harmful constituents in the wastes, and in the Agency's view, support a T listing.

Adverse Health Effects of Constituents of Concern

Ingestion of drinking water from ground and surface waters contaminated by lead and chromium threatens human health. Aquatic species exposed to the heavy metals may also be adversely effected.

The hazards of human exposure to lead include neurological damage, renal damage and adverse reproductive effects. In addition, lead is relatively toxic to freshwater organisms and bioaccumulates in many species. Contact with chromium compounds can cause dermal ulceration in humans. Data also indicates that there may be a correlation between worker exposure to chromium and development of hepatic lesions. Additional information on the adverse health effects of these elements can be found in Appendices A.

Ferrocyanides exhibit low toxicity, but release cyanide ions and toxic hydrogen cyanide gas upon exposure to sunlight. Cyanide compounds can adversely affect a wide variety of organisms because of their inhibition of respiratory metabolism. Adverse health and environmental effects of cyanide are discussed in Appendix A.

The hazards associated with lead, chromium, and cyanide - containing compounds have been recognized by other regulatory programs. Lead and chromium are listed as priority pollutants in accordance with §307 of the Clean Water Act, and National Interim Primary Drinking Water Standards have

been established pursuant to the Safe Drinking Water Act. The Occupational Health and Safety Administration has a final standard for occupational exposure to lead and a draft technical standard for occupational exposure to chromium. In addition, a national ambient air quality standard for lead has been announced under the Clean Air Act. Final or proposed regulations of the States of California, Maine, Massachusetts, Minnesota, Missouri, New Mexico, Oklahoma and Oregon define lead and chromium compounds as hazardous wastes or components of hazardous wastes (7).

Cyanide is also listed as a priority pollutant under §307 (a) of the Clean Water Act. Cyanide compounds are defined as hazardous waste or components of hazardous waste in proposed or final regulations of California, Louisiana, Missouri, New Mexico, Oklahoma and Oregon (7).

References

(1) US EPA, Effluent Guidelines Division. Draft Development Document for Inorganic Chemicals Manufacturing Point Source Category. US EPA Contract No. 68-01-4492. April 1979.

(2) US EPA Effluent Guidelines Division. Inorganic Chemicals BAT Review. EEM/DH. May 1979

(3) US EPA, Office of Solid Waste. Assessment of Industrial Hazardous Waste Practices Inorganic Chemicals Industry. US EPA Contract No. 68-01-2246. March 1975.

(4) Personal Communication to Virginia Steiner from US EPA Effluent Guidelines Division. December 1979.

(5) Handbook of Chemistry and Physics, 48th Ed. The Chemical Rubber Company. 1967-68.

(6) Cruz, M., et al. 1974. Absorption and Transformation of HCN on the Surface of Copper and Calcium Montmorillonite. Clay Minerals 22:417-425.

(7) US EPA Office of Solid Waste. State Hazardous Waste Program Files. January 1980

Organic Chemicals

LISTING BACKGROUND DOCUMENT

ACETALDEHYDE PRODUCTION

Distillation bottoms from the production of acetaldehyde from ethylene (T)

Distillation side cuts from the production of acetaldehyde from ethylene (T)

I. Summary of Basis for Listing

Distillation bottoms and distillation side cuts from acetaldehyde production from ethylene contain suspected carcinogens such as chloroform, and formaldehyde and contain other toxic materials as well.

The Administrator has determined that the still bottoms from acetaldehyde production from ethylene may pose a substantial present or potential hazard to human health or the environment when improperly transported, treated, stored, disposed of or otherwise managed, and therefore should be subject to appropriate management requirements under Subtitle C of RCRA. This conclusion is based on the following considerations:

1. The wastes contain chloroform and formaldehyde which have been identified by the Agency as exhibiting substantial evidence of carcinogenicity, as well as other toxic materials, including methylene chloride, methyl chloride, paraldehyde, and formic acid.

2. The wastes are held in settling ponds prior to deep well injection or they are disposed of in lagoons. While in the settling ponds and lagoons, there is the potential for ground and surface water contamination by leaching and flooding. Additionally, there is risk of volatilization of the toxic waste components from the settling ponds and human exposure via inhalation.

3. The wastes are persistent in the environment and tend to bioaccumulate so that there is a potential for widespread exposure through volatilization or drinking water contamination.

II. Source of the Waste and Typical Disposal Practices

A. Profile of the Industry

Acetaldehyde (CH_3CHO) is a high-volume production chemical intermediate used principally in the manufacture of acetic anhydride, butyraldehyde, chloral, pyridines, and other chemical derivatives. Most acetaldehyde is manufactured by the liquid-phase oxidation of ethylene.(1) Acetaldehyde is produced in three plants in the U.S., which utilize ethylene for starting material.(2)

Table 1 provides a list of the ethylene-based plants, their locations, and their production capacities.

TABLE 1

Acetaldehyde Producer Locations, Annual Production Capacities and Raw Materials Used (2)(4)

Company	Facility	1978 Production Capacity (Gg/Yr)	Raw Material
		(metric tons/yr x 10^3)	
Celanese Corp.			
Celanese Chem. Co. Div.	Bay City, Tx.	136	Ethylene
	Clear Lake, Tx.	277	Ethylene
Eastman Kodak Co. Eastman Chemical Products, Inc., subsid. Texas Eastman Co.	Longview, Tx.	277	Ethylene (90%); ethyl alcohol (10%)
Total		690	

B. Manufacturing Process

The direct liquid-phase oxidation of ethylene is the most widely used method for the manufacture of acetaldehyde. Ethylene is catalytically oxidized with air in a dilute hydrochloric acid solution containing the chlorides of palladium and copper.[3,4,5]

The process involves the oxidation of ethylene by palladium chloride to form product acetaldehyde, palladium metal and hydrogen chloride:

$$C_2H_4 + PdCl_2 + H_2O \longrightarrow CH_3CHO + Pd + 2HCl$$

ethylene; palladium chloride; acetaldehyde; metallic palladium; hydrochloric acid

Cupric chloride is used as the second component of the catalyst system to reoxidize the palladium metal to palladium chloride:

$$2CuCl_2 + Pd^o \longrightarrow PdCl_2 + 2CuCl$$

cupric chloride; palladium chloride; cuprous chloride

The cuprous chloride thus formed is, in turn, reoxidized in the second stage regeneration unit to cupric chloride:

$$2CuCl + 1/2\ O_2 + 2HCl \longrightarrow 2CuCl_2 + H_2O$$

cuprous chloride; cupric chloride

C. Waste Generation, Waste Composition and Waste Management

1. Waste Generation and Composition (3,4,5)

The process which generates the subject waste is shown in Figure 1. Ethylene feed gas goes to a tubular reactor where it mixes with palladium chloride and copper chloride in solution at 9 atmospheres of pressure and a temperature of 130°C. The reaction products are flash evaporated and the product acetaldehyde passes overhead to the crude distillation column. The aqueous bottoms go to a reactor where the palladium catalyst is regenerated and recycled to the acetaldehyde reactor. The overhead from the crude distillation column is condensed; unreacted ethylene and light hydrocarbons (including a small amount of acetaldehyde) are vented. The crude acetaldehyde from the bottom of this column then goes to final distillation. Purified acetaldehyde is distilled overhead. Two wastes are obtained: the side-cuts and the bottoms. The distillation bottoms (discharge wastewater) containing high-boiling organic impurities leaves the still at the bottom; and the side-cut stream consists of higher boiling organic and chlorinated organics is removed as a side stream higher up the column. (4,7)

Table 2 shows the analytical composition of waste discharges for the two streams.

Table 3 presents data on 1978 acetaldehyde production capacity, estimated production, and estimated generation of still bottom and side cut wastes for the three plants which produce acetaldehyde by direct liquid-phase oxidation of ethylene.

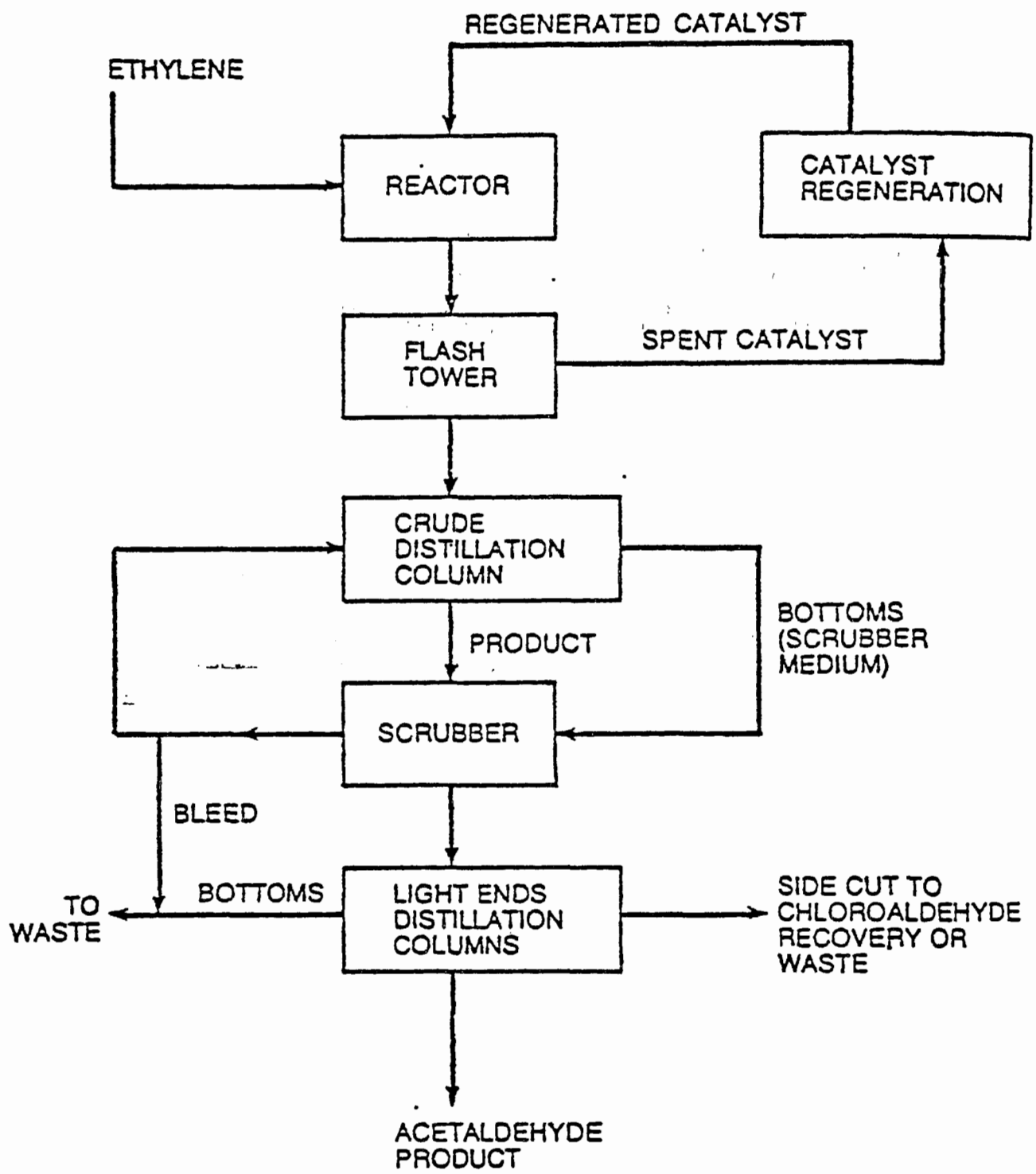

Figure 1. SIMPLIFIED ACETALDEHYDE SCHEMATIC PROCESS FLOW

TABLE 2

Uncontrolled Waste Discharge Ratio (4)
(g of discharge per kg of acetaldehyde)

Component	Formula	Distillation Bottoms (Discharge Wastewater)	Distillation Side-Cut	Combined *>
Ethylene	C_2H_4	-	-	-
Acetaldehyde	C_2H_4O	-	7.8	7.8
Acetic Acid	$C_2H_4O_2$	13.9	0.6	14.5
Chloroacetaldehyde	C_2H_3OCl	-	5.5	5.5
Acetyl chloride	C_2H_3OCl	4.2	5.0	9.2
Chloral	C_2HOCl_3	2.1	3.4	5.5
Paraldehyde	$(C_2H_4O)_3$	1.6	-	1.6
Other organics (including chloroform, formaldehyde and methylene and methyl chloride)		4.0	2.0	6.0
	TOTAL Volatile Organics:	25.8	24.3	50.1
Water	H_2O	795.6	25.5	821.1
	TOTAL STREAM:	821.4	49.8	871.2

*>These totals are combined because combination of the two waste streams is a known method disposal. (4)

Table 3
Estimated Still Bottom Generation from Acetaldehyde Production - 1978[a]

Company	Location	1978 Production Capacity (1000 MT/yr)	Estimated Production[b] (1000 Mt/yr)	Estimated Still-Bottom Wastewater Generated (1000 Mt/yr)	Estimated Side-Cut Waste Generated[c] (1000 Mt/yr)	Total (1000 Mt)
Celanese Chemical	Bay City, TX	136	97	111	5	116
Celanese Chemical	Clear Lake City, TX	277	197	227	10	237
Texas Eastman	Longview, TX	277	197	227	10	237
TOTAL:		690	491	565	25	590

[a]Based on data from reference 4.

[b]Based on 1976 industry average of 71% production, 1000 MT/yr.

[c]Based on Figures in Table 2, 1000 MT/yr.

2. Waste Management

Reported disposal of the side cuts has been by deep well injection.[4] Waste water from the distillation bottoms has been disposed of both by deep well injection and in anaerobic lagoons.[4] One of the three domestic plants producing acetaldehyde from ethylene disposes of both side cuts and wastewater by deep well injection.[4] This plant combines the two wastes prior to injection.[4] Deep well injection requires waste presettling and flow equalization via ponding prior to injection to avoid well obstruction. So that the wastes from this plant are also managed at least for a time in holding ponds.

The waste constituents of concern are chloroacetaldehyde, paraldehyde, chloroform, formaldehyde, methylene chloride, and methyl chloride and formic acid. Acetyl chloride and chloral, although dangerous, are expected to hydrolise rapidly upon aqueous disposal, so that there is little possibility of migration and exposure (App. B.) (42).

III. Discussion of Basis for Listing

A. Hazards Posed by the Waste

The toxic components present in these wastes include the compounds listed below in Table 4.

Table 4. Toxic Components in the Waste

- Chloroform
- Formaldehyde
- Methylene chloride
- Methyl chloride
- Paraldehyde
- Formic acid
- Chloroacetaldehyde

A number of these compounds are known or suspected carcinogens or mutagens while all exhibit toxic properties.

These waste constituents are capable of migration by leaching or by volatilization from lagoons or holding ponds (the management method for both waste streams, see p. 6 above), and of reaching environmental receptors should the wastes be improperly managed.

As to the migratory potential of waste constituents, chloroacetaldehyde, which is present in high concentrations (4), is highly soluble (App. B.). Although subject to degredation, the most significant degredation mechanism for chloroacetaldehyde is biodegration, and thus chloroacetaldehyde would be expected to persist for long periods in the abiotic conditions of an aquifer. (42) Further, chloroacetaldehyde is highly volatile (vapor pressure 100 mm Hg), and thus could migrate via an air exposure pathway. (42) Chloroacetaldehyde is in fact an extremely noxious vapor, with a TLV of 1 ppm.

(42) Thus, this threshold could be exceeded in areas in the vicinity of the lagoon if chloroacetaldehyde were to volatilize at rates four levels of magnitude less than its actual volatility potential. (42)

Paraldehyde, another waste constituent present in high concentrations (4), is capable of migrating via ground or surface water, since it is extremely soluble (120,000 ppm). (42) Bacterial degradation is the chief degredation mechanism (42), so this compound would likely persist in an abiotic environment such as that of most groundwaters.

Other contaminants of concern are likewise capable of migrating and persisting via water or air exposure pathways. Chloroform, for example is highly soluble (8200 ppm). Although it adsorbs to organic soil constituents and to clay surfaces, management could occur in areas with highly permeable soil or soils low in organic content, so that mobility would not be significantly impeded. Chloroform hydrolises slowly, and so could persist for substantial periods in ground and surface waters (half life of 18 months in dark water). (42)

Thus, virtually all chloroform emitted from a lagoon is expected to persist in groundwater or reach surface waters via groundwater movement (App. B.). Such behavior is likely to result in exposure to humans using such groundwater sources as drinking water supplies within adjacent areas. Such movement and persistence of chloroform has been observed.(17) Chloroform has been detected in groundwater supplies in Miami, Florida.(18)

Movement of chloroform within surface water is likely to result in exposure to aquatic life forms in rivers, ponds, and reservoirs (App.B.). Similarly, potential exposure to humans is likely where water supplies are drawn from surface waters.

Chloroform is projected to be released to the atmosphere from surface water systems (App. B.). Although chloroform decomposes slowly in air when it is exposed to sunlight, the photochemical degradation products are carbon tetrachloride, a carcinogen, (47) and phosgene, a highly toxic gas. In addition, photochemical degradation mechanisms result in chlorine burden. At stratospheric levels, atomic chlorine reduces the levels of ozone which shields the earth from harmful radiation.(20)

Formaldehyde is also capable of migrating and reaching environmental receptors via a groundwater exposure pathway since it is miscible. Biodegradation is the most significant degradation mechanism, so that formaldehyde would be likely to persist in groundwater. (33) Formaldehyde also oxidizes to form toxic formic acid, increasing the likelihood of exposure to that substance. (33)>

Formic acid could itself migrate via both an air and water pathway, being both highly volatile and miscible. (33) Formic acid would have high mobility so long as soils were not basic and were low in organic content. (33)

Both methylene chloride and methyl chloride also are capable of migrating and persisting via air and water exposure pathways, as both waste constituents are quite soluble (although methylene chloride is significantly more soluble than methyl chloride), and also highly volatile (33).

>Soil attenuation would not significantly impede formaldehyde's migratory potential in areas where soil is highly permeable or low in organic constituents (33).

Virtually all of the methylene chloride and methyl chloride discharged from a lagoon is expected to persist in groundwater or reach surface waters via groundwater movement (App. B.). Such behavior is likely to result in exposure to humans who use such groundwater sources as drinking water supplies within adjacent areas.

Both methylene chloride and methyl chloride are likely to be released to the atmosphere from surface water systems (App. B.). Furthermore, there may be high local concentrations of these compounds near disposal sites due to their high volatility which could also result in serious adverse effects to individuals residing near such sites, due to exposure to high vapor concentrations.

The persistence of many of the contaminants of concern has been demonstrated through analysis of leachates from actual disposal sites. Chloroform has been found in PPM concentrations at Love Canal, while methyl chloride levels reached 180 ppb. (43,44,45) Leachate from the Story chemical site included methylene chloride in the ppm range. (46)

As demonstrated above, therefore, the waste constituents of concern are capable of migrating and persisting if these wastes are managed improperly. Improper management is certainly reasonably plausible or possible. Thus, lagoons or holding ponds may be sited in areas with highly permeable soils, and may lack adequate leachate control features. There may be inadequate cover to impede migration of volatile waste constituents. There may also be inadequate flood control measures to impede waste washout in the event of heavy rainfall. Thus, mismanagement could realistically occur, resulting in substantial hazard.

The Agency is aware that most of the waste constituents of concern (with the exception of chloroacetaldehyde and paraldehyde) are likely to be present in small concentrations. In light of the high potential for substantial hazard associated with these materials, the concentrations are deemed sufficient to warrant regulation as hazardous. The Agency's policy for carcinogens in water, for example, is that <u>any</u> exposure to a carcinogen will induce an oncogenic response in a human receptor, and that the greater the concentration of the carcinogenic substance, the greater the likelihood of response. (See 44 <u>FR</u> 15926, 15940 (March 15, 1979)). In light of the carcinogenic potential of many of these waste constituents, therefore, even small (<100 ppm) concentrations are considered significant.

Furthermore, the wastes are generated in significant quantities (see Table 3 above) so that large amounts of all waste constituents are available for environmental release, increasing the likelihood of exposure. There is also more chance of a major damage incident should wastes be mismanaged. The quantity of waste generated is thus a further reason supporting the hazardous waste listing of these two waste streams from production of acetaldehyde.

B. <u>Health and Ecological Effects</u>

1. <u>Chloroform</u>

<u>Health Effects</u> - Designated a priority pollutant by U.S.E.P.A., chloroform has been judged as having high carcinogenic potential in humans on the basis of substantial evidence of its carcinogenicity. (10,11,47) Chloroform also is considered a toxic chemical [oral rat LD_{50}= 800 mg/Kg].

Other studies have demonstrated that chloroform can cause a variety of teratological and other effects in animals, such as missing ribs, delayed skull ossification, maternal toxicity, and fetotoxicity, when it is administered orally or in a vapor phase. [12,13] Occupational exposure situations have resulted in damage to liver and kidneys with some signs of neurological disorder. [14] Manifestation of the toxic nature of chloroform is, in part, attributable to the observation that metabolism results in toxication rather than detoxication.[15,16] Additional information and specific references on the adverse effects of chloroform can be found in Appendix A.

Ecological Effects - Chloroform has been found to be acutely toxic at high concentrations to bluegill and rainbow trout.

Industrial Recognition of Hazard - Chloroform has been given a moderately toxic hazard rating via oral and inhalation routes by Sax in Dangerous Properties of Industrial Materials.

Regulations - OSHA has set the TWA at 50 ppm.

2. Methylene chloride and methyl chloride

Health Effects - Methylene chloride[21] and methyl chloride are highly mutagenic.[22,23] Methylene chloride is very toxic [oral rat LD_{50} = 167 mg/Kg].

Exposures to high vapor concentrations of methylene chloride can produce dizziness, nausea and numbness of the extremities;[24] prolonged exposure to concentrations near 500 ppm could result in central nervous system depression and elevated levels of carboxyhemoglobin,

levels that reduce the blood's ability to carry oxygen and thus cause asphyxiation. Similar toxicological effects are expected with exposure to methyl chloride. Severe contamination of food or water can result in irreversible renal and hepatic injury.[25]

Exposure to high concentration can cause death.[26] Additional information and specific references on the adverse effects of methylene chloride and methyl chloride can be found in Appendix A.

Ecological Effects - In laboratory tests, high concentrations of methyl chloride are acutely (96-hours) toxic to aquatic organisms, e.g., the bluegill.[27] Similarly, methylene chloride also is actively toxic.[28,29]

Regulations - The OSHA standard adopted for methylene chloride is TWA 500 ppm. The OSHA standard for methyl chloride is 100 ppm.

Industrial Recognition of Hazard - Sax, Dangerous Properties of Industrial Materials, designates methylene chloride as highly toxic via inhalation and moderately toxic via oral and skin routes. Methyl chloride is designated highly toxic via inhalation.

3. Formaldehyde

Health Effects - Formaldehyde has been reported to be carcinogenic,[30,31] mutagenic[32] and teratogenic.[33] The Agency has also identified formaldehyde as a compound which exhibits substantial evidence of being carcinogenic. It is toxic [oral rat LD_{50} = 600 mg/Kg] causing inflammatory effects in many mammalian species.[34] Additional information and specific references on the adverse effects of formaldehyde can be found in Appendix A.

Ecological Effects - Formalin, an aqueous solution of formaldehyde, can cause toxic effects to exposed aquatic life.[35] It is lethal to *Daphnia magna*.[36]

Regulations - OSHA has set a standard air TWA limit of 3 ppm for formaldehyde.

Industrial Recognition of Hazard - Sax, Dangerous Properties of Industrial Materials, lists formaldehyde as highly toxic to skin, eyes and mucous membranes.

4. Chloroacetaldehyde

Health Effects - Chloroacetaldehyde is a toxic chemical which is mutagenic and a proposed carcinogen.[37,38,39] It is extremely corrosive upon contact and can cause severe effects to the skin, eyes, and respiratory tract. Upon decomposition, conversion to methyl chloride takes place and, as previously discussed, methyl chloride is a known mutagen. Additional information and specific references on the adverse effects of chloroacetaldehyde can be found in Appendix A.

Regulations - The OSHA standard for chloroacetaldehyde is 1 ppm in air.

Industrial Recognition of Hazard - Chloroacetaldehyde is dessignated as a highly toxic irritant in Sax, Dangerous Properties of Industrial Materials.

5. Paraldehyde

Health Effects - Paraldehyde is a toxic chemical [oral rat LD_{50} = 1530 mg/Kg]. It has been implicated in human fatalities in which congestion of the lungs and dilation of the right side of the heart occurred following oral ingestion of the chemical.[41] Additional information and specific references on the adverse effects of paraldehyde can be found in Appendix A.

6. Formic Acid

Health Effects - Formic acid is toxic [oral rat LD_{50} = 1,210 mg/Kg] and ingestion of even small amounts for short periods may cause permanent injury or severe damage to skin, eyes, and mucosal membranes. Because it is rapidly absorbed through the lungs, chronic exposure to formic acid vapors can result in blood in urine. The OSHA (1976) and ACGIH (1977) standards for the workplace are 5 ppm. Additional information and specific references on the adverse effects of formic acid can be found in Appendix A.

Regulations - The OSHA standard for formic acid is a TWA of 5 ppm.

Industrial Recognition of Hazard - Formic acid is designated as highly toxic via ingestion, moderately toxic via inhalation and moderately toxic as a skin irritant in Sax, Dangerous Properties of Industrial Materials.

IV. References

1. Hayes, E.R. Acetaldehyde. Kirk-Othmer Encyclopedia of Chemical Technology. 2nd Ed. Volume 1. Interscience Publishers, New York, 1963. pp.77-95.

2. Stanford research Institute. 1978 Directory of Chemical Producers - U.S.A. SRI International, Menlo Park, California, 1978. 1127 pp.

3. Kirk-Othmer Encyclopedia of Chemical Technology. 2nd Ed. Vol. 1 John Wiley and Sons, New York, 1970. pp. 86, 87.

4. Lovell, R.J. Acetaldehyde Product Report. Emissions Control Options for the Synthetic Organic Chemicals Manufacturing Industry. Draft. Prepared for the U.S. Environmental Protection Agency under Contract No. 68-02-2577, January 1979.

5. U.S. Environmental Protection Agency. Industrial Process Profiles for Environmental Use: Chapter 6. The Industrial Organic Chemicals Industry. EPA-600/2-77-023f, February 1977.

6. Stanford Research Institute. 1979 Chemical Economics Handbook. Acetaldehyde. SRI International, Menlo Park, California, March 1979.

7. Jira, et al. Acetaldehyde via Air or Oxygen. Hydrocarbon Processing, 55(3): 97-100, March 1976.

8. American Conference of Governmental Industrial Hygienists. TLV's for Chemical Substances and Physical Agents in the Workroom Environment. Cincinnati, Ohio. 1977.

9. Sittig, M. Pollution Control In the Organic Chemical Industry. Noyes Data Corporation, Park Ridge, New Jersey, 1974.

10. United States Environmental Protection Agency. Carcinogen Assessment Group Type II Risk Assessment, 1979.

11. National Cancer Institute. Report on Carcinogenesis Bioassay of Chloroform, NTIS PB264018, 1976.

12. Schwetz et al. Toxicology and Applied Pharmacology 28: 442, 1974.

13. Thompson et al. Toxicology and Applied Pharmacology 29: 348, 1974.

14. National Institute of Occupational Safety and Health. Recommended Criteria for . . . Occupational Exposure to Chloroform, No. 75-114, 1974.

15. Ilett et al. Exper. Mol. Pathology, 19: 215, 1973.

References (cont.)

16. McLean. British Journal of Experimental Pathology 51: 317, 1970.

17. Roberts, P. Removal of Trace Contaminants from reclarified water during aquifer passage. NATO-CCMS Conference, Sept. 11-13, 1978, West Germany.

18. USEPA. Preliminary Assessment of Selected Carcinogens in Drinking Water EPA-560/4-75-003a, 1975.

19. United States Environmental Protection Agency. Carbon tetrachloride: Ambient Water Quality Criteria Document, 1979.

20. National Academy of Sciences, Stratospheric Ozone Depletion by Halocarbon Chemistry and Transport, 1979.

21. United States Environmental Protection Agency. Unpublished Results of the Health Effects Research Laboratory, 1979.

22. Andrews et al, 1976.

23. Simmon et al, 1977.

24. Pattie, Industrial Handbook of Toxicology, 1965.

25. United States Environmental Protection Agency. Methyl Chloride: Ambient Water Quality Criteria. PB 296797, 1979.

26. MacDonald, 1964.

27. Dawson, et al. The Acute Toxicity of 47 Industrial Chemicals to Fresh and Saltwater Fishes. J. Hazard. Materials, 1:303, 1977.

28. USEPA. In-Depth Studies on Health and Environmental Impacts of Selected Water Pollutants. Contract No. 68-01-4646, 1978.

29. Alexander et al. Toxicity of Perchloroethylene, Trichloroethylene, 1,1,1-Trichloroethane, and Methylene Chloride to Fathead Minnows. Bull. Environ. Contam. Toxicol. 20:344, 1978.

30. Nelson, N. 1979. Letter to Federal agencies: A status report on formaldehyde and HCl inhalation study in rats. October 19, 1979.

31. Katanabe, F., et al. 1954. Study on the carcinogenicity of aldehydes; 1st Report. Experimentally produced rat sarcomes by repeated infections of aqueous solutions of formaldehyde. Genn. 45: 451.

32. Auerbach, C., et al. 1977. Genetic and cytogenetical effects of formaldehyde and relative compounds. Mut. Res. 39:317.

References (cont.)

33. Humi, H. and H. Olnder. 1973. Reproduction study with formaldehyde and hexamethylenetetramine in beagle dogs. Food Cosmet. Toxicol. 11: 459.

34. Coon, R.S., et al. 1970. Animal inhalation studies on ammonia, ethylene glycol, formaldehyde, dimethylamine and ethanol. Tox. Appl. Pharmacol. 16: 464.

35. U.S. EPA. 1976. Investigation of selected potential environmental contaminants: Formaldehyde. EPA 560/2-76-009.

36. Dowden, B.F. and M.J. Barrett. 1965. Toxicity of selected chemicals to certain animals. Jour. Water Pollut. Control Fed. 37: 1308.

37. Rannug et al. The Mutagenicity of Chloroethylene Oxide, Chloroacetaldehyde, 2-Chloroethanol and Chloroacetic Acid, Conceivable Metabolites of Vinyl Chlloride. Chem. Biol. Inter. 12(3-4): 251-263, 1976.

38. Hussain and Osterman-Golkar. Comment on the Mutagenic Effectiveness of Vinyl Chloride Metabolites. Chem. Biol. Interact. 12(3-4):265-267, 1976.

39. Guengerich et al. Biochem. 18:5177-5182, 1979.

40. Waskell, L., A Study of the Mutagenicity of Anesthetics and their Metabolites. Mut. Res. 57(2): 141-154, 1978.

41. Browning, 1965.

42. Dawson, English and Petty, 1980. Physical Chemical Properties of Hazardous Waste Constituents.

43. Barth, E.F., Cohen, J.M., "Evaluation of Treatability of Industrial Landfill Leachate", Unpublished report, U.S. EPA, Cincinatti. Nov. 30, 1978.

44. O'Brien, R.P, City of Niagara Falls, N.Y., Love Canal Project, Unpublished report, Calgon Corp., Calgon Environmental Systems Div., Pittsburgh, Pa.

45. Rcera Research, Inc., Priority Pollutant Analyses prepared for Nuco Chemical Waste Systems, Inc., Unpublished report, Tonawanda, N.Y., April, 1979.

46. Sturino, E., Analytical Results: Samples From Story Chemicals, Data Set Others 336", Unpublished data U.S. EPA Region 5, Central Regional Laboratories, Chicago, Illinois, May, 1978.

47. Cancer Assessment Group List of Carcinogenic Substances, April 22, 1980.

LISTING BACKGROUND DOCUMENT

ACRYLONITRILE PRODUCTION

Bottom stream from the wastewater stripper in the production of acrylonitrile (R, T)

Still bottoms from final purification of acrylonitrile in the production of acrylonitrile (T)

Bottom stream from the acetonitrile column in the production of acrylonitrile (R,T)*

Bottoms from the acetonitrile purification column in the production of acrylonitrile (T)*

I. Summary of Basis for Listing

The hazardous wastes generated in the production of acrylonitrile contain the toxic constituents acrylonitrile, acrylamide, acrolein, hydrocyanic acid, and acetonitrile. The Administrator has determined that the subject waste from acrylonitrile production may pose a substantial present or potential hazard to human health or the environment when improperly transported, treated, stored, disposed of or otherwise managed, and therefore should be subject to appropriate management requirements under Subtitle C of RCRA. This conclusion is based on the following considerations:

1) Of the constituents present in these wastes, acrylonitrile has been identified by the Agency as a substance exhibiting substantial evidence of being a carcinogen and is extremely toxic. Acrylamide is regulated as a carcinogen by OSHA. Acrolein is extremely toxic and a suspected mutagen. Hydrocyanic acid is extremely toxic, as is HCN gas. Acetonitrile is also toxic.

*These waste streams were originally proposed in a single listing description, and are now listed separately for purposes of clarity.

2) The bottom streams from the wastewater stripper and the acetonitrile column, and the bottoms from the acetonitrile purification column are typically stored and settled in ponds prior to deep well disposal. If improperly stored, leachate from such systems could persist in groundwater, causing potential exposure through drinking water. Volatilization of toxic compounds from the pond also poses a risk to humans.

3) Still bottoms from the final purification of acrylonitrile are typically incinerated. Improper incineration could lead to dispersion of waste contaminants.

4) The bottom streams from the wastewater stripper and the acetonitrile column contain substantial concentrations of hydrocyanic acid, which can be released as hydrogen cyanide gas, an extremely toxic gas, if these wastes are exposed to mildly acidic conditions.

5) The aqueous wastes from this process are generated in substantial quantities, increasing the possibility of exposure should mismanagement occur.

II. Sources of the Waste and Typical Disposal Practices

A. Profile of the Industry

Acrylonitrile is produced in the U.S. by four producers operating six plants (Table 1). All six plants use the(SOHIO) Standard Oil of Ohio process for ammoxidation of propylene. The chemical reaction in the form of acrylonitrile may be represented by the following equation:

$$2CH_2 = CH - CH_3 + 2NH_3 + 3O_2 \longrightarrow 2CH_2 = CH - CN + 6H_2O$$

The reaction of propylene and ammonia results in acrylonitrile (70-80 percent), acetonitrile (3 percent), and hydrogen cyanide (HCN) (8-13 percent).(3)(4)(5) (Acetonitrile and hydrogen cyanide would

TABLE 1

U.S. Producers of Acrylonitrile

Producer	Location	Capacity
American Cyanamid Co.	New Orleans, LA	265 MM lbs/year
E.I. duPont de Nemours & Company, Inc.	Memphis, TN	270 MM lbs/year
E.I. duPont de Nemours & Company, Inc.	Beaumont, TX	350 MM lbs/year
Monsanto Company	Chocolate Bayou, TX	440 MM lbs/year
Monsanto Company	Texas City, TX	420 MM lbs/year
Vistron Company	Lima, Ohio	400 MM lbs/year
		2,145 MM lbs/year

Source: Reference 2

result from the reaction of acrylonitrile and water, forming cyanohydrinacetaldehyde, which decomposes to form acetaldehyde and hydrogen cyanide. The acetaldehyde reacts with ammonia and further decomposes to form acetonitrile and water.)

By-product hydrogen cyanide is currently recovered by American Cyanamid, duPont, Monsanto, and Vistron. Acetonitrile by-product is recovered by duPont and Vistron.[3][4][5]

B. Manufacturing Process

A flow sheet of a typical acrylonitrile plant is shown in Figure 1. The hazardous waste streams of interest are described in Section C.

C. Waste Generation and Management

1. Bottom stream from waste water stripper in acrylonitrile production. (Stream 14, Figure 1)

Gases from the acrylonitrile reactor are cooled and neutralized in a quench column with a sulfuric acid solution. Quenched product gases then pass to the absorber where acylonitrile, acetonitrile and hydrogen cyanide are recovered by absorption in water.

Quench column bottoms are sent to the wastewater stripper column where volatile organics are stripped with steam and recycled to the quench tower. The aqueous bottoms (Stream 14) which contain some of the catalyst, ammonium sulfate and heavy organics, are generated at the rate of about 3600 g/Kg. of acrylonitrile product[7]. Applying this ratio to the 1977 production figure for acrylonitrile gives a yearly production rate of about 6000 MM lbs/year of waste. A typical flow rate is about 155 gallons per minute.[8]

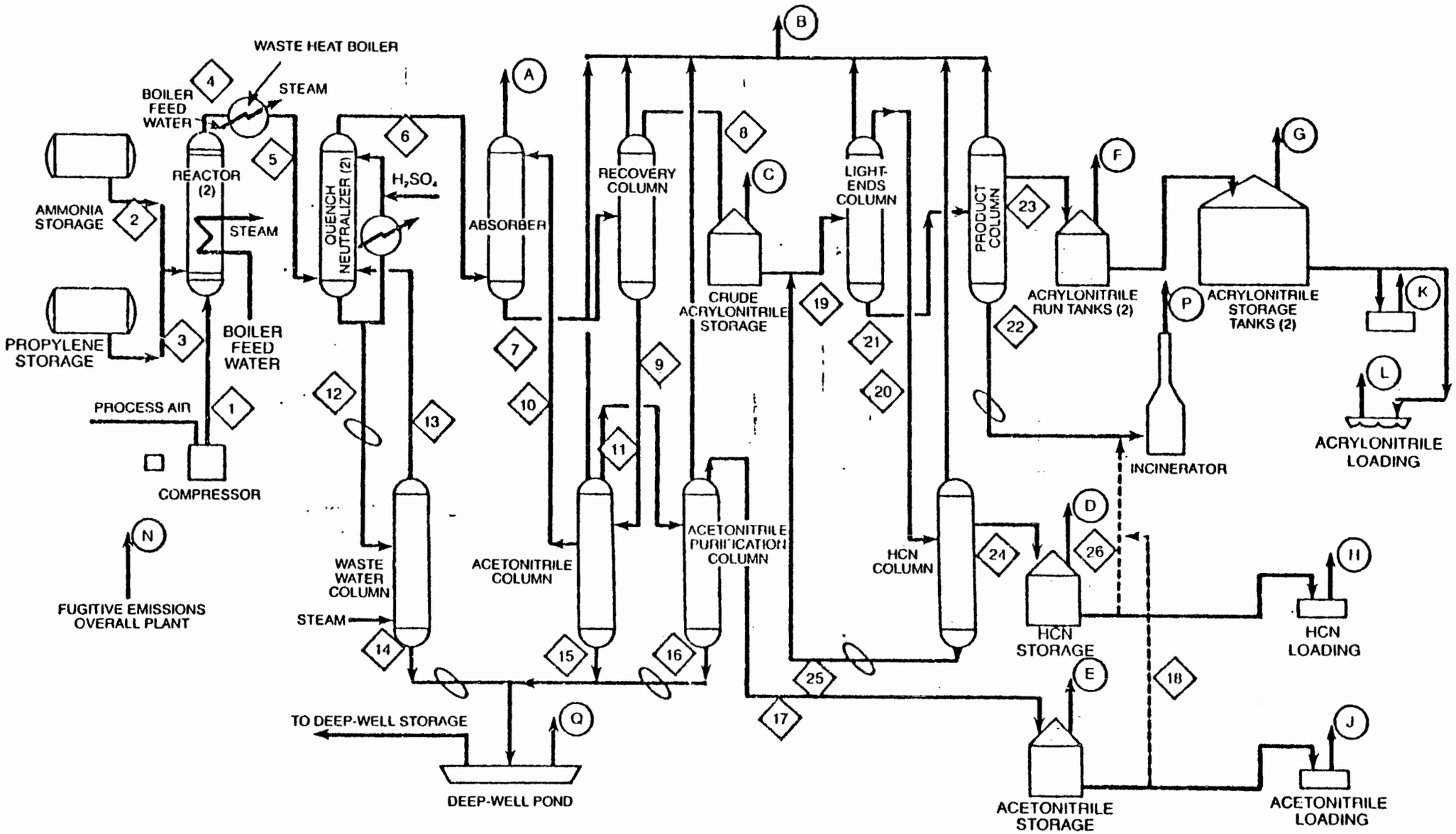

Figure 1. FLOWSHEET FOR ACRYLONITRILE PRODUCTION BY THE SOHIO PROCESSES (6)

Table 2 summarizes the composition of this waste stream. The waste constituents of concern are acrylonitrile, acetonitrile, and hydrocyanic acid.

TABLE 2

Typical Composition of Aqueous Bottom Stream from Wastewater Stripper [8]

	mg/l
Acrylonitrile	500 or less
Acetonitrile	3,000
HCN	7,000
Sulfates	32,000
Ammonia	15,000
Additional non-toxic solids	40,000 approximately

Wastewater stripper column bottoms are sent to a settling pond where they are co-mingled with other process wastes. After the solids settle, the liquid waste is injected into disposal wells.[8] The acrylonitrile facility which deviates from this process is duPont in Memphis. At this facility, the wastes are treated by alkaline hydrolysis. The biodegradable effluent is disposed of in a municipal sewer.[8]

2. Still bottoms from final purification of acrylonitrile. (Stream 22, Figure 1)

Crude acrylonitrile is purified by successive distillation of the absorber bottoms.

The absorber bottoms go to a recovery column where crude

acylonitrile is separated from crude acetonitrile and sent to crude acrylonitrile storage. The crude acrylonitrile then is sent to the light ends column which separates the hydrogen cyanide and other light ends. The bottoms from this column go to the product column where the heavy impurities are removed and disposed of in an incinerator.[6][7] The still bottoms from this process (Stream 22) are typically incinerated.[6][8] A typical rate of production for this stream is 8.1 g/Kg. of product[7]. Applying this factor to the 1977 production results in an estimate of 13 MM lb. of this stream produced per year. The column bottoms contain acetonitrile (25 percent) and toxic materials such as acrolein and acrylamide (75 percent)[7]. Acrylonitrile is also probably present, since it is unlikely purification will be complete.[8]

3. Bottom Stream from Acetonitrile Column (Stream 15, Figure 1).

The crude acetonitrile obtained as bottoms from the recovery column goes to the acetonitrile column for separation of water (which is recycled to the absorber). This waste stream is also aqueous. This stream is typically produced at a rate of 1003 g. per kg. acrylonitrile product.[6] Applying this factor to the total nameplate capacity of the acrylonitrile producers who are recovering acetonitrile results in an upper limit estimate of 675 MM lb. of the waste stream produced per year. At the Vistron plant, approximately 180 gallons per minute of column bottoms are produced.[8]

A typical composition of this waste stream is shown in Table 3.

TABLE 3

Typical Composition of Bottom Stream from Acetonitrile Column [8]
(waste constituents of concern only)

	mg/l
HCN	225
Acrylonitrile	<10
Acetonitrile	35

This waste stream is combined with other process wastes (streams 14 and 16, Figure 1) and sent to a settling pond, followed by final disposal, as previously described (see page 6).

4. Bottoms from Acetonitrile Purification Column (Stream 16, Fig. 1).

This stream is generated in the purification of crude acetonitrile obtained as bottoms from the recovery column, after water separation in the acetonitrile column. This waste stream is not expected to be present in large quantities, since acetonitrile is a minor by-product of acrylonitrile production.

The waste is expected to contain substantial concentrations of acetonitrile (since purification would probably not be complete), and acrylamide (which as a heavy compound would be found in the purification residue). This waste is generally mixed with aqueous process waste and sent to the settling pond, followed by final disposal (see page 6).

Although waste streams 14, 15, and 16 (the two aqueous bottom wastes, and the acetonitrile purification column bottoms) are reported to be mingled in process and co-disposed, the Agency has determined to list each waste stream separately for purposes of clarity. There may also be situations of which the Agency is unaware when one or another of these waste streams is is not co-disposed, in which case the individual listing description prevents a lapse in regulatory coverage.

III. Discussion of Basis for Listing

A. Toxicity Hazard Posed by Wastewater Stripper Stream, Acetonitrile Column Stream, and Acetonitrile Purification Column Bottoms

These three waste streams are commonly co-minged in a single settling pond, where solids are allowed to settle (see page 6), and therefore are discussed together. The wastes are certainly capable of creating a substantial hazard if improperly ponded.

As described above, these waste streams contain acrylonitrile, a substance identified by the Agency as exhibiting substantial evidence of being carcinogenic; acrylamide, which is regulated by OSHA as a carcinogen; highly toxic hydrocyanic acid; and acetonitrile, which is also toxic (see page 13 below). These waste constituents are deemed to be present in sufficent concentrations to be of regulatory concern. Even in these highly diluted waste streams*, acrylonitrile is present in concentrations up to 500 ppm (Table 2, p. 6).** Hydrocyanic acid may be present in

*Acetonitrile purification column bottoms are not aqueous, but probably are mixed with other aqueous waste streams, and so are included in the discussion in the text.

**The Agency policy is that carcinogens have no safe level of exposure. See FR 15926, 15930 (March 1979). Thus, minute concentrations of carcinogens may well be of regulatory concern. In any case, the Agency regards acrylonitrile concentrations in these wastes to be relatively substantial for purposes of making a hazardousness determination.

concentrations of 7000 ppm. Concentrations of these constituents in pond sediments are likely to be significantly higher, since pond sediments are much more concentrated than aqueous waste streams.

These wastes are also generated in very substantial quantities. Thus, the quantities of hydrocyanic acid, acrylonitrile and acetonitrile discharged to a common holding pond annually, from just one plant, are very substantial.[8]

Compound	Amount/Year
Hydrocyanic Acid	5 million pounds
Acrylonitrile	300,000 pounds
Acetonitrile	2 million pounds

Very large amounts of hazardous waste constituents are thus potentially available for environmental release. If mismanagement occurs, large expanses of groundwater, surface water and soils may be contaminated. Contamination will probably be prolonged, since large amounts of pollutants are available for loading. Site attenuative capacity may be exhausted as well, again increasing the risk of exposure. All of these factors strongly support the listing.

Waste constituents, moreover, have high migratory potential. Acrylonitrile, acrylamide, and acetonitrile are all highly soluble (App. B). (Acetonitrile, in fact, is miscible.[46]) In addition, acrylamide and acrylonitrile tend to volatilize [46], and so could pose a hazard via an air inhalation pathway. They may be highly mobile as well, particularly in areas with highly permeable soils, or where soils are low in organic content.[46] Acrylamide has in fact been documented to have moved from a sewer grouting operation through the soil to a private water will.[18] These waste constituents also may persist

after migrating from the waste site. The major degradation mechanism for acrylamide and acetonitrile is biodegradation[46], which would not affect these constituents in the abiotic conditions of an aquifer. Acetonitrile also degrades (although slowly) to highly toxic cyanide [46], increasing the opportunity for hazard if it is released. The major degradation mechanism for acrylonitrile is photodetoxification[13,14], which again would not affect this compound's persistence in groundwater.

Hydrocyanic acid, the other major waste constituent, is also highly mobile and persistent. Free cyanides, which may migrate from these wastes, have been shown to be extremely mobile in soil; pH appears to influence the mobility with greater mobility at high pH.[11] Also, cyanide has been shown to move through soils into groundwater.[14] In surface waters, cyanide often volatizes. The hydrogen cyanide vapors pose a hazard to workers or nearby populations because of their extreme toxicity.

An actual damage incident involving wastes containing hydrocyanic acid confirm that cyanide can migrate, persist and contaminate groundwater, public drinking water, and soil. A landfill in Monroe County, Pennsylvania, that accepts plating process such as hydrocyanic acid, has created a groundwater pollution problem in the area.[44]

Thus, these wastes could clearly create a substantial hazard via a groundwater exposure pathway if improperly ponded, or if concentrated liquid from the holding pond is improperly well injected. Improper ponding also could result in a hazard via a surface water pathway. If flooding occurs due to heavy rainfall, these hazardous chemicals could enter surface water unless adequate waste management

methods are utilized. As most of the acrylonitrile plants are located in Texas and Louisiana Gulf Coast area where average yearly rainfall is heavy and the groundwater is close to the surface, the likelihood of groundwater contamination is very high.

The Agency therefore regards these three wastes as toxic.

B. Reactivity Hazard Posed by Wastewater Stripper Stream and Acetonitrile Column Stream

Both of these waste streams contain hydrocyanic acid, which is hydrogen cyanide gas in liquid form. If these wastes are exposed to relatively mild acidic conditions, hydrogen cyanide gas will be released. The wastes thus meet the characteristic of reactivity contained in Part 261.23(a)(b) and are listed accordingly.

C. Toxicity Hazard of Still Bottoms from Final Purification of Acrylonitrile

The acrylonitrile final product purification column emits a concentrated bottom waste containing large concentrations of acrolein, acrylamide and acetonitrile. These bottoms are typically disposed of by incineration. Mismanagement of this stream by improper incineration (inadequate temperature or residence time) creates a high probability of health risks resulting from exposure to uncontrolled contamination of ambient air with these waste constituents. Also, incineration is not an assured waste management method, so that the wastes could be improperly land disposed as well. The waste is therefore deemed hazardous.

B. Health and Ecological Effects

1. Acrylonitrile

Health Effects - Industry-sponsored studies and other

studies of data on exposed workers and animal tests strongly indicate that acrylonitrile is carcinogenic in humans.[20,24] It has also been identified by the Agency as a compound exhibiting substantial evidence of being a carcinogen. Evidence has also developed from positive laboratory tests in several organisms that acrylonitrile is a mutagen.[25,27] It has also been reported to be teratogenic and toxic to mothers.[28,29] Acrylonitrile is an extremely toxic chemical by inhalation, ingestion, or dermal routes following exposure to small quantities (oral rat LD_{50}=82mg/Kg.) it is rapidly absorbed and distributed widely in the body, and acts by damaging respiratory processes (causing asphyxia) and many tissues in a manner similar to cyanide poisoning.[30,33]

Ecological Effects - The fathead minnow has an observed 96-hour LC-50 of 10-18 mg/1, which demonstrates the toxicity of this substance to aquatic biota[34]. A bluegill in a 28-day study bioconcentrated acrylonitrile 48-fold[35].

Priority Pollutant - Acrylonitrile is designated as a priority pollutant under Section 307(a) of the CWA.

Regulations - Acrylonitrile is regulated by the Office of Water and Waste Management under the Clean Water Act (304(a) and 311). The Office of Toxic Substances has regulated acrylonitrile under FIFRA and has requested additional testing under Section 4 of the Toxic Substances Control Act. The OSHA TWA is 2 ppm.

Industrial Recognition - Sax, Dangerous Properties of Industrial Materials designates acrylonitrile as highly toxic by oral and dermal routes. The Handbook of Industrial Toxicology designates acrylonitrile as

extremely toxic via ingestion, inhalation, and percutaneous routes. Additional information on the adverse effects of acrylonitrile can be found in Appendix A.

2. Acrylamide

Health Effects - Acrylamide is regulated by OSHA as a carcinogen under OSHA Standard 1910.1000(g). Acrylamide is a highly toxic chemical by inhalation, ingestion or dermal routes (oral rat LD_{50}=170 mg/Kg). Acrylamide exposure produces a progressive neuropathy in humans, involving both the central nervous system. Reversal of symptoms is seen following removal from exposure.(36) Fatal intoxication has been reported following industrial exposure.(37)

The ability of acrylamide to alkylate tissue proteins and nucleic acids would suggest that investigations in these areas are necessary.(36)

Ecological Effects - Acrylamide has been found to be toxic to freshwater fish after acute exposures at concentrations ranging from 89,000 to 1,000,000 micro-g/l.(36)

Regulations - Acrylamide is regulated by OSHA as a carcinogen under OSHA Standard 1910.1000(g). The Office of Toxic Substances has requested additional information and testing under Section 4(e) of TSCA. The OSHA TWA is 300 micro-g/m^3 (skin).

Industrial Recognition of Hazard - Sax, Dangerous Properties of Industrial Materials, recognizes acrylamide as a highly toxic hazard

upon ingestion, inhalation and skin absorption.

3. Acrolein

Health Effects - Acrolein is suspected to be mutagenic and is an extremely toxic chemical by ingestion (oral rat LD_{50}=46 mg/Kg). Mutagenicity was evidenced in several test systems involving various species.[38,39] Toxicity was demonstrated in animals chronically exposed to low levels of acrolein in air.

Priority Pollutant - Acrolein is a priority pollutant under Section 307(a) of the CWA.

Industrial Recognition of Hazard - Sax (Dangerous Properties of Industrial Materials) lists the toxic hazard rating of acrolein as high via oral routes and moderate via dermal routes. It is considered a priority pollutant by EPA.

Regulations - OSHA has set a TWA of 0.1 ppm and has regulated it under OSHA Standard 1910.1000. Acrolein is regulated by the Office of Water and Waste Management under the Clean Water Act Sections 311 and 304(a) and under the Safe Drinking Water Act. The Office of Air, Radiation and Noise has regulated acrolein under the Clean Air Act. The Office of Toxic Substances has requested additional testing under Section 4 of TSCA and has regulated acrolein under FIFRA. Additional information in the adverse effects of acrolein can be found in Appendix A.

4. Hydrocyanic Acid/Hydrogen Cyanide (HCN)

Health Effects - Hydrocyanic acid in acrylonitrile produc-

tion wastes is extremely toxic to humans and animals via ingestion, causing interference with respiration processes leading to asphyxiation and damage to several organs and systems. Toxic effects have been reported in humans at the very low exposure level of less than 1 mg/kg.[40,41] Human poisonings, including several involving deaths, have been reported since the 1920's. HCN in gaseous state is extremely toxic (LC_{50} = 544 ppm.) to humans. In addition the U.S. Public Health Service established a drinking water standard of 0.2 mg/l as an acceptable level for cyanide in water supplies.

Priority Pollutant - Cyanide is a priority pollutant under Section 307(a) of the CWA.

Regulations - The OSHA permissible limit for exposure to HCN is 10 ppm (skin) (11 mg/m^3) as an eight hour time weighted average. DOT requires a label stating that HCN is a poisonous and flammable gas.

Industrial Recognition of Hazard - Sax, Dangerous Properties of Industrial Materials lists HCN as highly toxic through ingestion, inhalation and skin absorption. Additional information on the adverse effects of cyanide can be found in Appendix A.

5. Acetonitrile

Exposure to acetonitrile occurs primarily through vapor inhalation and skin absorphion. Exposure may cause liver and kidney damage, disorders of the central nervous system, cardiovascular system and gastrointestginal system. It is the release of the cyanide from acetonitrile that is believed to cause these effects. Acute poisoning and death have occured in workers inhaling acetonitrile in industry.[48]

Acetonitrile is a component of cigarette smoke and is absorbed by the oral tissues.[47,50] Nitriles and their metabolic products have been detected in the urine, blood, and tissues.[50] In a two year study with rats, carcinogenesis was not shown for the chemical.[49] Mutagenic effects have not been demonstrated. Teratogenic effects in rats include fetal abnormalities in pregnant rats[49] and skeletal abnormalities.[53] From chronic exposure, rat developed liver and kidney lesions, and monkeys showed poor coordination.[52] Until recently, acetonitrile has been investigated by toxicologist chiefly because of its relationship to thyroid metabolism.[51]

IV. References

1. Synthetic Organic Chemicals. United States 1977 Production and Sales. United States International Trade Commission. Washington, D.C.

2. 1979 Directory of Chemical Producers, SRI International, Menlo Park, California.

3. Blackford, Judith L. Chemical Conversion Factors and Yields. Chemical Information Services, Stanford Research Institute. Menlo Park, California, 1977.

4. Lowenheim & Moran. Faith, Keyes & Clark's Industrial Chemicals, 4th ed. 1975.

5. EPA-IMPQCE Series 02/78-03 February 1978.

6. Hobbs, F. D. and J. A. Key. Emissions Control Options for the Synthetic Organic Chemicals Manufacturing Industry. Acrylonitrile Draft Product Report. EPA Contract 68-02-2577. Hydroscience. August, 1978.

7. Hughes, T. W. and D. A. Horn. Source Assessment: Acrylonitrile Manufacture (Air Emissions). EPA 600/2-77-107j. September, 1977.

8. Lowenbach, W. and J. Schlesinger. Acrylonitrile Manufacture: Pollutant Prediction and Abatement. Mitre Technical Report MTR-7752. February, 1978.

9. Bernstein and Avital. HCN poisoning in a tobacco warehouse, Harefuah 62:165-167, 1962 (Hebrew).

10. 1978 Registry of Toxic Effects of Chemical Subslances. U.S. Department of Health, Education, and Welfare. National Institute of Occupational Safety and Health. Cincinnati, Ohio. January, 1979.

11. Alesii, B.A. and W.A. Fuller. 1976. The Mobility of Three Cyanide Forms in Soil. pp. 213-223. In Residual Management by Land Disposal. W.H. Fuller (ed.), Environmental Protection Agency, Cincinnati, OH. PB 256768 268.

12. Cruz, M., et al. 1974. Absorption and Transformation of HCN on the Surface of Copper and Calcium Montmorillonite. Clay Minerals 22:417-425.

13. Water-Related Environmental Fate of 129 Priority Pollutants. 1979. EPA-440/4-79-029a. U.S. EPA, Washington, D.C.

14. The Prevalence of Subsurface Migration of Hazardous Chemical Substances at Selected Industrial Waste Land Disposal Sites. 1977. EPA/530/SW-634. U.S. EPA, Washington, D.C.

15. Oil and Hazardous Materials Technical Assistance Data System. EPA/NIH (124) Water Chemistry.

16. Preliminary Assessment of Suspected Carcinogens in Drinking Water. EPA-560/4-75-003a. U.S. EPA, Washington, D.C., June 1975.

17. Sheldon, S. Lande, Stephen J. Bosch, and Philip H. Howard. 1979. Degradation and Leaching of Acrylamide in Soil. J. Environ. Qual. 8:133-137.

18. Igisu, Hideki, et al. 1975. Acrylamide Encephaloneuropathy Due to Well Water pollution. J. of Neurology, Neurosurgery and Psychiatry. 38:581-584.

19. Midwest Research Institute, 1977. Sampling and Analysis of Selected Toxic Substances. Section V Sampling and Analysis Protocol for Acrylonitrile. Progress Report 10. 13. Oct. 1-31, 1977.

20. O'Berg, M. Epidemiologic Studies of Workers exposed to acrylonitrile: Preliminary Results. E.I. DuPont de Nemours, 1977.

21. Monson, R.R. Mortality and Cancer Mortality Among BF Goodrich White Male Union Members who Ever Worked in Departments 5570 through 5579. Report to BF Goodrich Company and to the United Rubber Workers. FR 43FR 45762, 1977.

22. Norris, J.M. Status report on 2-year study incorporating Acrylonitril in the drinking water of rats. Health Environ. Res. Dow Chemical Company, 1977.

23. Quast et al. Toxicity of Drinking Water Containing Acrylonitrile in Rats: Results after 12 Months. Toxicol. Res, Lab Health Environ Res., Dow Chemical, 1977.

24. Maltoni et al. Carcunogenicity Bioassays on Rats of Acrylonitrile administered by inhalation and by ingestion. La Medicina del Lavoro 68:401, 1977.

25. Benes and Sram. Mutagenic Activity of Some Pesticides in Drosophila melanogaster. Ind. Med Surg 38:442, 1969.

26. Milvy and Wolff. Mutagenic Studies with acrylonitrile. Mut. Res. 48:271, 1977.

27. Venitt et al. Mutagenicity of Acrylonitrile (cyanrethylene) in Escherichia cole. Mut. Res. 45:283, 1977.

28. Murray et al. Teratologic evaluation of acrylonitrile monomer given to rats by garbage. Dow Chemical, 1976.

29. Murray et al. Teratologic evaluation of inhaled acrylonitrile monomer in rats. Dow Chemical, 1978.

30. NIOSH. A Recommended Standard for Occupational Exposure to Acrylonitrile. NIOSH #78-166, 1928.

31. Plunkett. Handbook of Environmental Toxicology, 19? .

32. Babanov et al. Adaptation of an Organism to Acrylonitrile at a low concentration factor in an industrial environment. Toksikol. Gig. Prod. Neftekhim 45:58, 1972.

33. Sakarai and Kusimoto. Epidemiologic Study of Health Impairment Among AN Workers. Rod. Kagaku 48:273, 1972.

34. Henderson et al. The effect of some organic cyanides (nitriles) in fish. Eng. Bull. Ext. Ser. Purdue Univ. No. 106, 130, 1961.

35. U.S. EPA, 1979. In-Depth Studies on Health and Environmental Impacts of Selected Water Pollutants. U.S. EPA, Contract 68-01-4646.

36. U.S. EPA. 1979. Environmental Criteria and Assessment Office. Acrylamide: Hazard Profile. (Draft)

37. U.S. EPA. 1976. Investigation of selected environmental contaminants: Acrylamides.

38. NIOSH. 1978. Registry of Toxic Effects of Chemical Substances. OHEW Pub. No. 79-100, p. 51.

39. U.S.E.P.A. Environmental Criteria and Assessment Office. Hazard Profile of Acrolein, December 1979.

40. NIOSH. Criteria for recommended standard occupational exposure to HCN and cyanide salts, #77-108, 1976.

41. Henderson, et al. 1961. The Effect of Some Organic Cyanides on Fish. Eng. Bull. Ext. Ser. Purdue University No. 106:130.

42. Deguidt et al. Mortality from poisoning by acetonitrite. Europ J Toxicol Environ Health 7:41-97, 1974.

43. Chemical Engineering News, Editors Newsletter, November 1979.

44. U.S. Environmental Protection Agency. 1978. Hazardous Waste Incidents, Office of Solid Waste, Hazardous Waste Management Division. Unpublished, open file data.

45. Kirk-Othmer Encyclopedia of Chemical Technology. 2nd Edition. John Wiley Interscience Publishers, New York, 1963.

46. Dawson, Petty, and English, 1980. Physical Chemical Properties of Hazardous Waste Constituents.

47. Dalhamn, T., et al. 1968. Mouth absorption of various compounds in cigarette smoke. Arch. Environ. Health 16: 831.

48. Dequidt, J., et al. 1974. Intoxication with acetonitrile with a report on a fatal case. Eur. J. Toxicol. 7: 91.

49. Dorigan, et al. 1976. Preliminary scoring of selected organic air pollutants. Environ. Prot. Agency, Contract No. 68-02-1495.

50. McKee, H.C., et al. 1962. Acetonitrile in body fluids related to smoking. Public Health Rep. 77: 553.

51. Patty, Frank A., Editor, Industrial Hygiene and Toxicology, Vol. II, Interscience Publishers, New York, 1963.

52. Pozzani, V.C., et al. 1959. An investigation of the mammalian toxicity of acetonitrile. J. Occup. Med. 1: 634.

53. Schmidt, W., et al. 1976. Formation of skeletal abnormalities after treatment with aminoacetonitrile and cycylophosphamide during rat fetogenesis. (Verh. Anat. 71:635-638 Ger.) Chem. Abst. 1515w.

LISTING BACKGROUND DOCUMENT

BENZYL CHLORIDE

Still Bottoms from the Distillation of Benzyl Chloride (T)

I. Summary of Basis for Listing

Production of benzyl chloride results in the generation of still bottoms which contain hazardous aromatic compounds that include toxic organic substances, carcinogens and suspected carcinogens. The waste constituents of concern are benzyl chloride, toluene, chlorobenzene, and benzotrichloride.

The Administrator has determined that the still bottoms from benzyl chloride production may pose a substantial present or potential hazard to human health or the environment when improperly transported, treated, stored, disposed of or otherwise managed, and therefore should be subject to appropriate management requirements under Subtitle C of RCRA. This conclusion is based on the following considerations:

1. Still bottoms from the distillation of benzyl chloride contain benzyl chloride, benzotrichloride (when the dark chlorination, (i.e., catalytic light process is used), toluene, and chlorobenzene isomers. Benzyl chloride has been identified as a carcinogen and a mutagen; the other compounds are toxic.

2. Total quantities of benzyl chloride and benzotrichloride generated per year in this waste equal approximately 90,000 pounds.

3. Disposal of waste in improperly designed or operated landfills could result in substantial hazard via groundwater or surface water exposure pathways. Disposal by incineration, if mismanaged, can also result in serious air pollution through release of hazardous vapors, due to incomplete combustion. Storage of the wastes before incineration presents a potential for contamination of surface or groundwater.

4. The hazardous waste constituents such as chlorobenzene are likely to persist in the environment and to bioaccumulate in environmental receptors.

II. Sources of the Waste and Typical Disposal Practices

A. Profile of the Industry

Benzyl chloride ($C_6H_5CH_2Cl$) is used as a raw material for pharmaceuticals and as an intermediate in the preparation of p-benzylphenol and benzyl alcohol.[1] The major use for the chemical, however, is in the production of butyl benzyl phthalate, which is a plasticizer used in the manufacture of vinyl products.[2]

Significant production of benzyl chloride is reported by two plants responding to the Clean Water Act Section 308 BAT questionnaire of 1979. These plants reported only one process route: toluene chlorination. Total reported production was 223,000 lb/day (100,000 kg/day), which is equivalent to 73.6 million lb/yr (33.4 million kg/yr).[5] Both plants that reported production of benzyl chloride also provided data on average production per day. Individual plant production ranges from 25,000 to 198,000 lb/day (11,400 to 89,900 kg/day), and averages 112,000 lb/day (50,600 kg/day).[5]

B. Manufacturing Process [1,2]

Benzyl chloride is produced from the chlorination of toluene. Chlorination may either be by UV light (photochlorination) or by the catalytic process. Catalytic chlorination requires more severe reaction conditions. There are certain differences in waste composition depending on which type of chlorination is used. These differences are described more fully below. The overall process, however, may be generally described.

Chlorine is fed to a heated reactor containing boiling toluene (see Figure 1). For production of benzyl chloride, the reaction is allowed to continue until there is a 37.5% increase in weight; at this point, a mild alkali is added to neutralize the acid formed. The by-product hydrogen chloride vapors

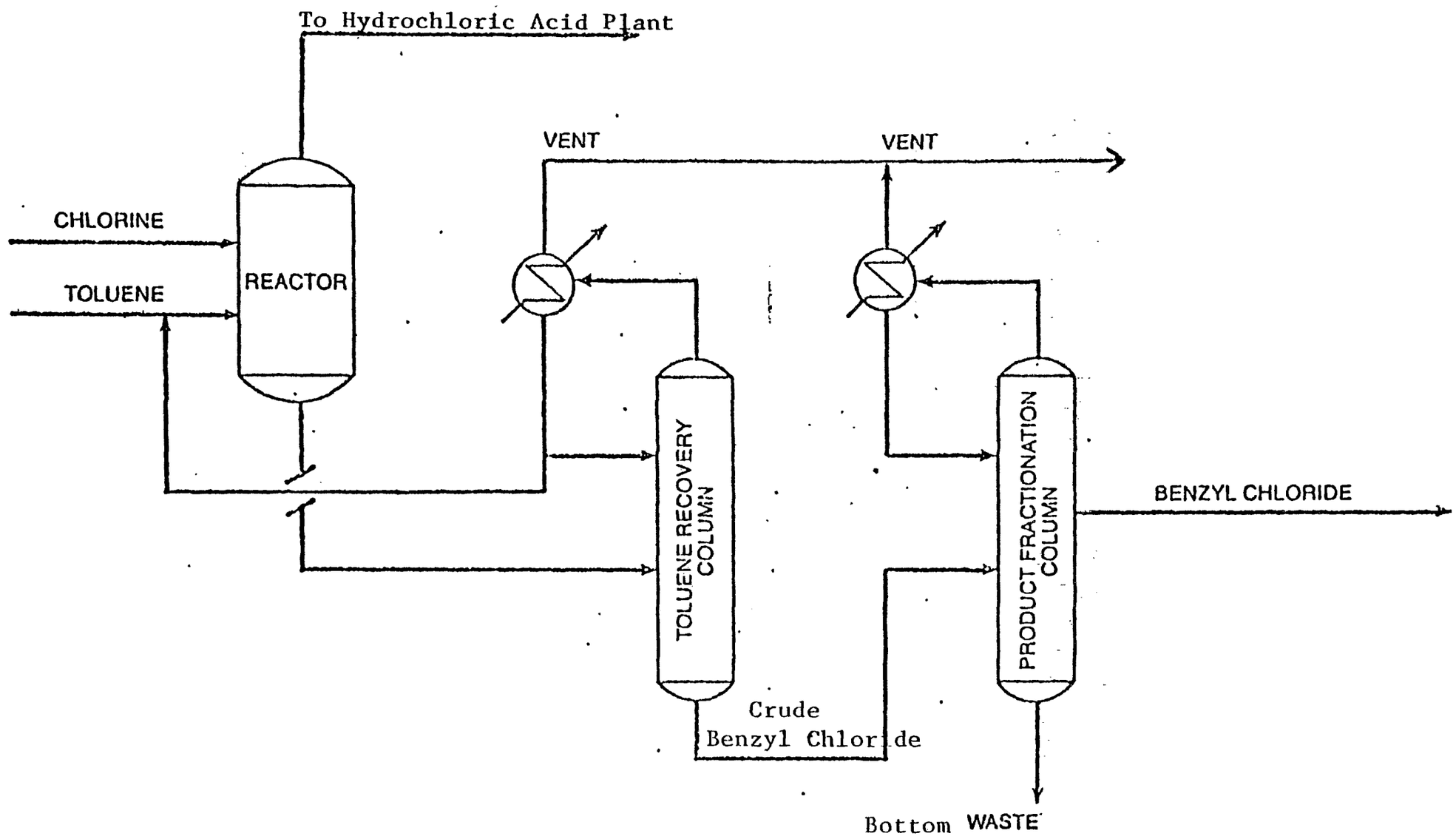

Figure 1. BENZYL CHLORIDE BY THE CHLORINATION OF TOLUENE

Modified from (1,2)

from the reactor may be passed to a hydrochloric acid plant or recovered as compressed gas.

The following equation shows the main reactions:

$C_6H_5CH_3$	+	Cl_2	----->	$C_6H_5CH_2Cl$	+	HCl
Toluene		Chlorine		Benzyl Chloride		Hydrogen Chloride

One side reaction is as follows:

$C_6H_5CHCl_2$	+	Cl_2	----->	$C_6H_5CCl_3$	+	HCl
Benzyl Dichloride		Chlorine		Benzotrichloride		Hydrogen Chloride

Reactor products are passed to a toluene-removal vacuum distillation column, where unreacted toluene is removed overhead and recycled to the reactor. Crude benzyl chloride from the bottom of the toluene column is then purified under vacuum in the product-fractionation column. Here, benzyl chloride product is drawn off as a sidestream and the listed waste stream, the still bottom stream, is generated.

C. Waste Composition, Generation and Management

1. Waste Composition and Generation

The still bottoms waste consists predominantly of chlorinated benzene molecules. If the photochlorination process is used, waste constituents will be benzal chloride (not a waste constituent of concern), and smaller concentrations of benzyl chloride (the product), a range of chlorinated benzenes (from toluene feed stock impurities), and some residual feedstock toluene.(2) The chlorinated benzenes in the still bottoms will probably be chiefly the heavier chlorinated benzenes (tri, tetra, penta, and hexa) since lighter chlorobenzenes will go overhead with the product.

It is estimated that benzal chloride will be present in concentrations of .02 kg/kg product, and additional constituents will be present in concentrations of .005 kg/kg product. (Modified from 2, 23)

If the liquid phase catalytic chlorination process is used, these same waste constituents will be present.[2] In addition, benzotrichloride will be formed due to the severer reaction conditions.[2] (The reaction pathway for benzotrichloride is indicated on p. 3 above.) Benzotrichloride and benzal chloride are expected to be present in the still bottoms in the amount of 0.01 kg/kg and 0.1 kg/kg respectively. (Modified from 2, 23)

Waste quantities are expected to be significant. To gain a rough idea of waste loading, one can assume that half the industry uses the photochlorination process while the other half uses the catalytic process. Therefore, based on total industry annual production of 33.4 million kg (p.2), waste loads from the catalytic process will be over 2 million kg annually (assuming benzal chloride is not recovered) with hazardous waste constituent loading exceeding 200,000 kg a year. Wastes from the catalytic process would be generated in quantities of approximately 3.3 million kg annually (assuming benzal chloride is not recovered), with hazardous waste loadings of approximately 80,000 kg annually.

2. Waste Management

Two operating benzyl chloride plants reported that incineration of the waste was their usual practice.[24] A third company is temporarily using landfills until incineration equipment can be obtained.[24] Because of the high chlorine content of the waste, an incinerator with alkali scrubbing of off-gases is necessary for proper environmental control.

During incineration, supplemental fuel is usually necessary because of the small heat content of the waste. Flame-out and consequent release of unburned toxic chlorinated hydrocarbons is not uncommon in such situations.

III. Discussion of Basis for Listing

A. Hazards Posed by the Waste

As noted above, the principal waste components are benzyl chloride and benzotrichloride. Toluene and chlorobenzene are also reported to be present, since they are present as feedstock materials. Benzyl chloride has been identified as a carcinogen and benzotrichloride is structurally similar to other demonstrated carcinogens. (See pp. 9-11 following.) Chlorobenzene and toluene are toxic chemicals.

1. Exposure Pathways

As noted, the typical disposal method for these wastes is discharge to a holding pond or other temporary storage area prior to incineration. One company currently landfills these toxic wastes.

The waste constituents of concern may migrate from improperly designed or managed holding ponds or landfills and contaminate ground and surface waters. First of all, the waste constituents are soluble in significant concentrations. Benzyl chloride is extremely soluble in water (solubility 330,000 mg/l), while toluene and chlorobenzene are also very soluble (470 mg/l and 488 mg/l respectively). (Appendix B.) Toluene would also tend to promote solubilizing of other waste constituents, since it is a widely-used commercial solvent. Thus, these waste constituents could leach into groundwater if holding ponds or landfills are inadequatedly designed and constructed, or lack adequate leachate collection systems.* Siting of waste management facilities in areas with highly permeable soils could likewise facilitate leachate migration. Disposal or storage in improperly designed or managed ponds

*Some of these waste constituents' mobility are effected by certain soil attenuation mechanisms. (App. B) Pollutant mobility could be high, however, where soil attenuation would be slight; for example, where soil is low in organic content, highly permeable, or where attenuative capacity is exhausted.

could similarly promote leachate formation and migration (indeed, the large quantity of percolating liquid available could facilitate environmental release by acting as a hydraulic head).

There is also a danger of migration into and contamination of surface water if holding ponds are improperly designed or managed. Inadequate flood control measures could result in washout or overflow of ponded wastes.

The migratory potential of chlorobenzenes and toluene is confirmed by the fact that chlorobenzenes (mono, di, tri, tetra, and penta) and toluene have been detected migrating from the Love Canal site into surrounding residential basements and solid surfaces, demonstrating ability to migrate through and persist in soils. ("Love Canal Public Health Bomb", A Special Report to the Governor and Legislature, New York State Department of Health (1978)). Benzyl chloride, although subject to hydrolyzation (App. B), has also been identified as leaching from the Hyde Park Site. (OSW Hazardous Waste Division, Hazardous Waste Incidents, Open File, 1978.)

Once these three contaminants migrate from the matrix of the waste, they are likely to persist in groundwater (see App. B). Chlorobenzene, toluene, and benzyl chloride have in fact been shown to persist in soil and groundwater, as demonstrated by the above-described damage incidents.*

---

*The above discussion does not consider benzotrichloride, another waste constituent of concern. This waste constituent is relatively insoluble, not very volatile, and tends to degrade in water. It is, however, relatively bioaccumulative (App. B). Thus, this waste constituent shows a lesser propensity to migrate and reach environmental receptors, but could accumulate in harmful concentrations if it reached a receptor. Furthermore, benzotrichloride has been identified as migrating from the Love Canal site (OSW Hazardous Waste Division, Hazardous Waste Incidents, supra), demonstrating some ability to migrate and persist if improperly managed.

There also may be a danger of migration and exposure via an air inhalation pathway if disposal sites lack adequate cover. Toluene is relatively volatile (App. B), and is mobile and persistent in air, having been found in school and basement air at Love Canal ("Love Canal Public Health Bomb", supra). Chlorobenzenes and benzyl chloride, while less volatile (App. B), are also mobile and persistent in air. Chlorobenzene (mono through penta) have been identified in school and basement air at Love Canal ("Love Canal Public Health Bomb," supra), while benzyl chloride has been shown to persist in the atmosphere in the New Jersey area for considerable periods of time.(6) Thus, these hazardous constituents could migrate from uncovered landfills or holding ponds and persisit for long periods in the environment.

Disposal by incineration, if mismanaged, also can result in serious air pollution through the release of toxic fumes. This may occur when incineration facilities are operated in such a way that combustion is incomplete (i.e., inadequate conditions of temperature, mixing, and residence time) resulting in airborne dispersion of hazardous vapors containing undestroyed waste constituents. This could present a significant opportunity for exposure of humans, wildlife and vegetation in the vicinity of these operations to hazardous constituents through direct contact and also through pollution of surface waters.

The waste constituents in the still bottoms from benzyl chloride production are of the highest regulatory concern. For example, there is no known safe level of exposure for carcinogens (see 44 Fed. Reg. 15926, 15940, (March 15, 1979).). The Administrator would require assurance that these waste constituents could not migrate and persist to justify a determination not to list this waste stream. These waste constituents, to the contrary,

have migrated and persisted to cause substantial hazard in actual instances. The waste is therefore deemed hazardous.*

B. Health and Ecological Effects

1. Benzyl Chloride

Health Effects - Benzyl chloride has been identified as a carcinogen[8], and is also mutagenic[9]. Additional information and specific references on the adverse effects of benzyl chloride can be found in Appendix A.

Regulatory Recognition of Hazard - The OSHA TWA for benzyl chloride is 1 ppm. DOT requires labeling as a corrosive. The Office of Water and Waste Management, EPA, has regulated benzyl chloride under Section 311 of the Clean Water Act. Preregulatory assessment has been completed by the Office of Air, Radiation and Noise under the Clean Air Act. The Office of Toxic Substances has requested additional testing under Section 4 of the Toxic Substances Control Act.

Industrial Recognition of Hazard - Benzyl chloride is listed in Sax's Dangerous Properties of Industrial Materials as highly toxic via inhalation and moderate via the oral route.

2. Chlorobenzene

Health Effects - Chlorobenzene is a toxic chemical absorbed into the body by inhalation, ingestion, and through the skin. Doses of chlorobenzene have been reported to cause liver damage in animals, abnormal dumping of porphyoin pigments from the liver, weakness and stupor. Additional information

---

*Furthermore, the waste constituents are generated in large annual quantities, thus increasing the possibility of exposure if the wastes are managed improperly. These large quantities of hazardous constituents potentially available for release further justify a hazardous listing.

and specific references on the adverse effects of chlorobenzene can be found in Appendix A.

Environmental Effects - Chlorobenzenes are toxic to lower order organisms and aquatic toxicity of chlorobenzene is indicated from studies with saltwater shrimp species. Chlorobenzene has been shown to bioaccumulate in fish[15].

Regulations - The OSHA TWA in air is 75 ppm. Chlorobenzene is designated as a priority pollutant under Section 307(a) of the CWA. (10, 11, 12, 13, 14)

Industrial Recognition of Hazard - Chlorobenzene is listed in Sax's Dangerous Properties of Industrial Materials as a dangerous chlorine compound.

3. Toluene

Health Effects - Toluene is a toxic chemical absorbed into the body by inhalation, ingestion, and through the skin. The acute toxic effect of toluene in humans is primarily depression of the central nervous system[16]. Chronic occupational exposure in shoe workers was reported to lead to the development of neuro-muscular disorders, such as abnormal tendon reflexes and decreased grasping strength[17]. In animal studies, preliminary evidence of bone marrow chromosomal abnormalities was reported[18, 19].

Since toluene is metabolized in the body by a protective enzyme system which is also involved in the elimination of other toxins, it appears that overloading the metabolic pathways with toluene will greatly reduce the clearance of other, more toxic chemicals. Additionally, the high affinity of toluene for fatty tissue can assist in the absorption of other toxic chemi-

cals into the body. Thus, synergistic effects of toluene on the toxicities of other contaminants may render the waste stream more hazardous. Beyond these considerations, toluene, by virtue of its solvent properties, can facilitate mobility and dispersion of other toxic substances, assisting their movement toward ground or surface waters. Toluene is designated as a priority pollutant under Section 307(a) of the CWA. Additional information and specific references on the adverse effects of toluene can be found in Appendix A.

Ecological Effects - Toluene has been shown to be acutely toxic to freshwater fish and to marine fish. Chronic toxicity is also reported for marine fish[20]. The USEPA recommended criterion levels to protect aquatic life are: freshwater, 2.3 mg/l, and marine, 100 mg/l[20].

Regulations - Toluene has an OSHA standard for air (TWA) of 200 ppm. The Department of Transportation requires a "flammable liquid" label.

Industrial Recognition of Hazard - Toluene is listed as having a moderate toxic hazard rating via oral and inhalation routes (Sax, Dangerous Properties of Industrial Materials).

4. Benzotrichloride

Health Effects - Benzotrichloride is toxic with vapors that are highly irritating to the skin and mucous membranes. In addition, large doses have caused central nervous system depression in experimental animals[21]. Inhalation of 125 ppm for 4 hours was lethal to rats[22]. Benzotrichloride has been designated as a priority pollutant under Section 307(a) of the CWA. Additional information and specific references on the adverse effects of benzotrichloride can be found in Appendix A.

Industrial Recognition of Hazard - Benzotrichloride has a high toxicity rating via inhalation (Sax, Dangerous Properties of Industrial Materials).

IV. References

1. Kirk-Othmer. Encyclopedia of Chemical Technology. 5. John Wiley and Sons, Inc., New York, 1964.
2. Lowenheim, F. A. and Moran, M. K. Faith, Keyes and Clark's Industrial Chemistry. Fourth Ed. John Wiley and Sons, New York, 1975.
3. Preliminary Assessment of Suspected Carcinogens in Drinking Water. EPA-560/4-75-003. USEPA, Washington, D.C., pp. 70-71.
4. Lu, P. and R. Metcalf, 1975. Environmental Fate and Biodegradability of Benzene Derivatives as Studied in a Model Aquatic Ecosystem. Environ. Health Perspect. 10:269-284.
5. Individual Plants' Responses to EPA's 308 questionnaire.
6. Altshuller, A. P., Lifetimes of Organic Chemicals in the Atmosphere, Environmental Scientific Technology, 1980, in press.
7. U.S. EPA, 1979. Chlorinated Benzenes: Ambient Water Quality Criteria (Draft).
8. Druckrey, H., H. Druse, R. Pruessmann, S. Ivankovic, C. Landschutz. [Carcinogenic alkylating substances --- III. Alkyl-Halogenides, -sulfates, -sulfonates and strained heterocyclic compounds.] Z. Krbsforsch 74:241-70, 1970 (Ger).
9. McCann, J., E. Choi, E. Yamasaki, B. N. Ames: Detection of carcinogens as Mutagens in the Salmonella/microsome Test -- Assay of 300 chemicals. Proc. National Academy of Sciences VSA 72:5135-39, 1975.
10. U.S. EPA, 1977. Investigation of selected potential environmental contaminants: Halogenated benzenes. EPA-560/1-77-004.

11. Lr, A. Y. H., et al, 1974. Liver microsomal electron transport systems. III. Involvement of cytochrome B_5 in the HADH-supported cytochrome p^5-450 dependent hydroxylation of chlorobenzene. Biochem. Biphys. Res. Comm. 61:1348.

12. Brodie, B. B. et al, 1971. Possible mechanism of liver necrosis caused by aromatic organic compounds. Proc. Natl. Acad. Sci. 68:160.

13. Knapp, W. R., Jr., et al, 1971. Subacute oral toxicity of monochlorobenzene in dogs and rats. Toxicol. Appl. Pharmacol. 19:393.

14. Irish, D. D., 1963. Halogenated hydrocarbons: II. Cyclic. In Industrial Hygiene and Toxicology, Vol. II, 2nd Ed., (ed. F. A. Patty), Interscience, New York. P. 1333.

15. Lu, P. and Metcalf, 1975. Environmental Fate and Biodegradability of Benzene Derivatives as Studied in a Model Aquatic Ecosystem. Environ. Health Perspect. 10:269-285.

16. U.S. EPA, 1979. Toluene ambient water quality criteria (Draft).

17. Matsushita, T., et al, 1975. Hematological and neuro-muscular response of workers exposed to low concentration of toluene vapor. Ind. Health 13:115.

18. Dobrokhotov, V. B., and M. I. Enikeev, 1977. Mutagenic effect of benzene, toluene, and a mixture of these hydrocarbons in a chronic experiment. Gig. Sanit. 1:32.

19. Lyapkalo, A. A., 1973. Genetic activity of benzene and toluene. Gig. Tr. prof. Zabol.

20. U.S. EPA, 1979. Toluene: Hazard Profile. Environmental Criteria and Assessment Office, U.S. EPA, Cincinnati, Ohio.

21. Merck Index.

22. Sax, I. Dangerous Properties of Industrial Materials.

23. Groggins, Unit Processes on Organic Synthesis, 2nd ed., 1938.

24. U.S. Department of Health, Education, and Welfare. Criteria for a Recommended Standard -- Occupational Exposure to Benzyl chloride. Washington, D.C., 1978.

LISTING BACKGROUND DOCUMENT
CARBON TETRACHLORIDE PRODUCTION

Heavy ends or distillation residues from the production of carbon tetrachloride (T)

I. Summary of Basis for Listing

Heavy ends or distillation residues from carbon tetrachloride production contain carcinogenic and toxic organic substances. These include carbon tetrachloride, hexachlorobutadiene, hexachlorobenzene, perchloroethylene and hexachloroethane.

The Administrator has determined that the solid waste from carbon tetrachloride production may pose a substantial present or potential hazard to human health or the environment when improperly transported, treated, stored, disposed of or otherwise managed, and therefore should be subject to appropriate management requirements under Subtitle C of RCRA. This conclusion is based on the following considerations:

1. The heavy ends or distillation residues from the various carbon tetrachloride production processes contain some or all of the following constituents: perchloroethylene, carbon tetrachloride, hexachlorobutadiene, hexachlorobenzene, and hexachloroethane. All of these substances except hexachloroethane have been identified by the Agency as compounds which have exhibited substantial evidence of being carcinogenic; hexachloroethane is a suspect carcinogen. Hexachlorobenzene is also a teratogen. All of these compounds are very toxic as well.

2. Approximately 8.6 million pounds/year of waste containing these hazardous compounds are generated in the United States by six manufacturers at 10 plants.

3. Disposal of these wastes in drums in improperly designed or operated landfills represents a potential hazard due to the probable corrosion of drums and the resulting leaching into groundwater of these hazardous compounds.

4. Mismanagement of incineration operations and volatilization from landfills could result in the release of hazardous vapors to the atmosphere, and present a significant opportunity for exposure of humans, wildlife and vegetation in the vicinity of these operations to potentially harmful substances.

5. The components of concern are persistent in the environment, thus increasing the chance for exposure.

6. The components of concern have been implicated in actual damage incidents.

II. Sources of the Waste and Typical Disposal Practices

A. Profile of the Industry

There are six major corporations involved in the production of carbon tetrachloride. The locations and annual capacity for each plant are listed in Table 1.

The current principle use of carbon tetrachloride is in the manufacture of chlorofluoromethanes used in refrigeration and aerosols. Other uses include grain fumigation and a variety of solvent and chemical-manufacturing applications.(2)

B. Manufacturing Process

Carbon tetrachloride is produced principally via four processes: direct chlorination of methane, pyrolysis or chlorinolysis of hexachloroethane with simultaneous chlorination of perchloroethylene, direct chlorination of propane (in which perchloroethylene is produced as a co-product), and direct chlorination of carbon disulfide. These processes, and the listed waste streams generated thereby, are discussed below.*(4,2,31)

---

* These processes generally involve production of a range of chlorinated organic products as well as carbon tetrachloride

TABLE 1

Plant Sites for Carbon Tetrachloride Production[3]

Company	Location	Annual Capacity (Millions of Pounds)
Allied Chemical Corp. Specialty Chemicals Division	Moundsville, WV	8
Dow Chemical, U.S.A.	Freeport, TX Pittsburg, CA Plaquemine, LA	135 80 125
E.I. duPont de Nemours & Co., Inc. Petrochems Dept. Freon® Prod. Div.	Corpus Christi, TX	500
Stauffer Chemical Co. Ind. Chems. Div.	Le Mogne, AL Louisville, KY	200 70
Vulcan Material Co. Chemical Div.	Geismar, LA Wichita, KA	90 60
FMC Corporation	S. Charleston, WV	300
	Total	1,568

1. Direct Chlorination of Methane [31]

The sequence of reactions for production of carbon tetrachloride from the direct chlorination of methane is:

$$CH_4 + Cl_2 \longrightarrow CH_3Cl + HCl$$

$$CH_3Cl + Cl_2 \longrightarrow CH_2Cl_2 + HCl$$

$$CH_2Cl_2 + Cl_2 \longrightarrow CHCl_3 + HCl$$

$$CHCl_3 + Cl_2 \longrightarrow CCl_4 + HCl$$

The reaction is conducted adiabatically at temperatures ranging from 350° - 370°C and at approximately atmospheric pressure. In this process, methyl chloride, methylene chloride and chloroform are usually co-produced with carbon tetrachloride. The ratio of formation of these reaction products may be controlled to favor production of higher chlorinated products (e.g., carbon tetrachloride) by recycle of less chlorinated products (e.g., methyl chloride). Typical yields range from 85% to 95% based on methane.

Figure 1 represents a simplified process for production of carbon tetrachloride via direct chlorination of methane. Methane is mixed with chlorine, preheated and fed to a reactor fitted with mercury arc lamps to enhance disassociation of chlorine. Chlorine is the limiting reactant and about 65% of the methane reacts. A typical range of products leaving the reactor is: methyl chloride - 58.5%; methylene chloride - 29.3%; chloroform - 9.7%; and carbon tetrachloride - 2.3%. The effluent gases from the reactor also contain unreacted methane and hydrogen chloride which are separated by scrubbing the reacted gases with a mixture of liquid chloromethanes, usually a refrigerated

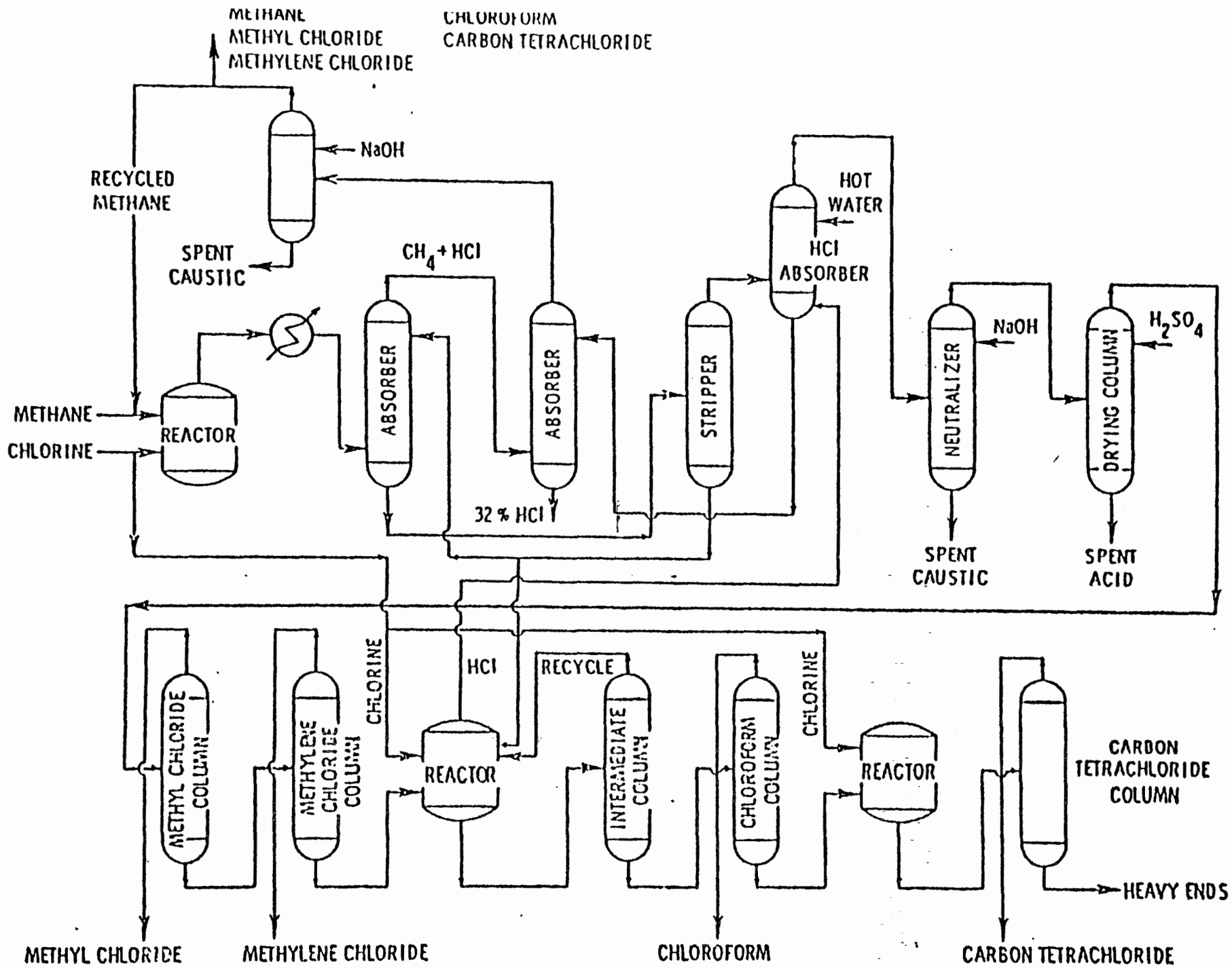

Figure 1. Methyl chloride, methylene chloride, chloroform and carbon tetrachloride by the direct chlorination of methane.

(Modified from 31)

mixture of chloroform and carbon tetrachloride. Methane and hydrogen chloride are not absorbed and go overhead. Hydrogen chloride is removed by scrubbing with water and methane is recycled. The enriched chloromethane solvent absorber effluent is stripped of methyl chloride and some methylene dichloride. The stripped solvent bottoms are recycled to the absorber. The overhead product is condensed and purified successively by a hot water wash (to remove residual hydrogen chloride), an alkali wash, and a strong sulfuric acid wash (to dry the chlorinated organic stream). The stripped methyl chloride, methylene chloride and any heavy ends are separated by fractional distillation.

A portion of the bottoms from the stripping column together with some or all of the recovered methyl chloride and methylene chloride is then fed to a secondary reactor where chlorination is again carried out photochemically, but this time in the liquid phase. Hydrogen chloride is vented from the reactor. The reaction products are purified and separated by a sequence similar to that used for methyl chloride and methylene chloride, except that any product less chlorinated than chloroform may be recycled. Desired quantities of chloroform are removed by distillation, and the remaining material is chlorinated in a third reactor to produce carbon tetrachloride. The effluent from the third reactor is distilled to recover carbon tetrachloride. The heavy bottoms from this tower is the process waste.

Waste constituents predicted to be present in heavy ends from this process in substantial concentrations are hexachloroethane, hexachlorobutadiene, perchloroethylene (tetrachloroethylene), and carbon tetrachloride.*

*As presented in Table 2, little or no carbon tetrachloride was recorded found in the air, aqueous and solid emissions. However, based on industry process, this constituent is predicted to be present in the waste. Further, the presence of even very small concentrations of this very potent carcinogen are of concern to the Agency.

Hexachloroethane would result from chlorination of C_2 molecules, which could be formed from methyl radicals. The same general type of reaction would also result in formation of hexachlorobutadienes, except that C_4 molecules (rather than C_2 molecules) would be chlorinated. Perchloroethylene is expected to result from the dechlorination of hexachloroethane.

A literature source estimating emissions from direct chlorination of methane is set forth in Table 2.

2. Chlorinolysis of Hydrocarbon Feedstocks

Chlorinolysis* processes, in fact, make up the bulk of carbon tetrachloride (perchloroethylene is a co-product) capacity in the United States. Feedstocks for this process include aliphatic hydrocarbons (e.g., propane), chlorinated aliphatic hydrocarbons, and chlorinated aromatic hydrocarbons. Use of chlorinated feedstocks is particularly valuable for control of residues from other chlorination processes, which otherwise would pose a difficult disposal problem.

The conditions necessary for chlorinolysis of hydrocarbon feedstocks are somewhat more severe than those of direct chlorination of methane; both higher temperatures and higher molar ratios of chlorine to hydrocarbon are used. The product distribution is quite dependent on the feedstock used and varies from over 90% carbon tetrachloride (propane) to over 90% perchloroethylene (propene).

*Chlorinolysis reactions refer to those chlorination reactions which result in extensive rupture of carbon-carbon bonds.

TABLE 2 ESTIMATED EMISSIONS FROM THERMAL CHLORINATION OF METHANE

	EMISSIONS kg/Mg of product[1]		
Species	Air	Aqueous	Solid
Methane	28	39	
Methyl chloride	trace		
Carbon tetrachloride	0.3		
Perchloroethylene			17
Hexachloroethane			16
Sodium chloride		16	
Sodium hydroxide		0.6	
			33

Source: Wasselle, "Chlorinated Hydrocarbons", Process Economics Program Report No. 126, Stanford Research Institute, Menlo Park, CA, August, 1978.

[1]Based on hydrogen chloride product. To convert from hydrogen chloride product to a specific chlolorinated hydrocarbon product, the following factors are used: 0.72 lbs HCl/lb Ch_3Cl

0.86 lbs HCl/lb CH^3Cl_2

0.92 lbs HCl/lb CH^2Cl_3

0.95 lbs HCl/lb CCl_4

carbon bonds (at severe reaction conditions), followed by rechlorination of the fractured portions. Waste residues result from incomplete chlorination of the cracked hydrocarbons. Hydrocarbon chlorinolysis reactions thus tend to produce similarly-composed residual wastes. Waste constituents predicted to be generally present are hexachlorobenzene, hexachloroethane, perchloroethylene, hexachlorobutadiene, and carbon tetrachloride. Two principal chlorinolysis processes for the production of carbon tetrachloride are described more fully below.

a. Chlorinolysis of Propane [31]

The basic chemical equation representing the direct chlorination of propane to produce carbon tetrachloride and perchloroethylene is:

$$C_3H_8 + 8Cl_2 \longrightarrow C_2Cl_4 + Cl_2$$

$$C_2Cl_4 + Cl_4 \longrightarrow C_2Cl_6$$

$$2C_2Cl_4 \longrightarrow C_4Cl_6 + Cl_2$$

Figure 2 is a simple block flow diagram for the production of carbon tetrachloride and perchloroethylene by the direct chlorination of propane. Feedstock chorine, together with recycled chlorine, and propane are introduced into a vaporizer where they are mixed with recycled chlorocarbons. Chlorine is used in approximately 10% to 25% excess. The mixed gases react adiabatically at atmospheric pressure in a refractory-lined reactor at temperatures ranging from 550°C and 700°C (controlled by the diluent action of recycled streams). The recycle ratio also affects the product distribution. Effluent from the rector (mainly carbon tetrachloride, perchlorethylne, hydrogen chloride, chlorine, and unreacted hydrocarbon) is quenched with perchloroethylene to minimize formation of by-products.

Carbon tetrachloride, separated by fractionation, is condensed and

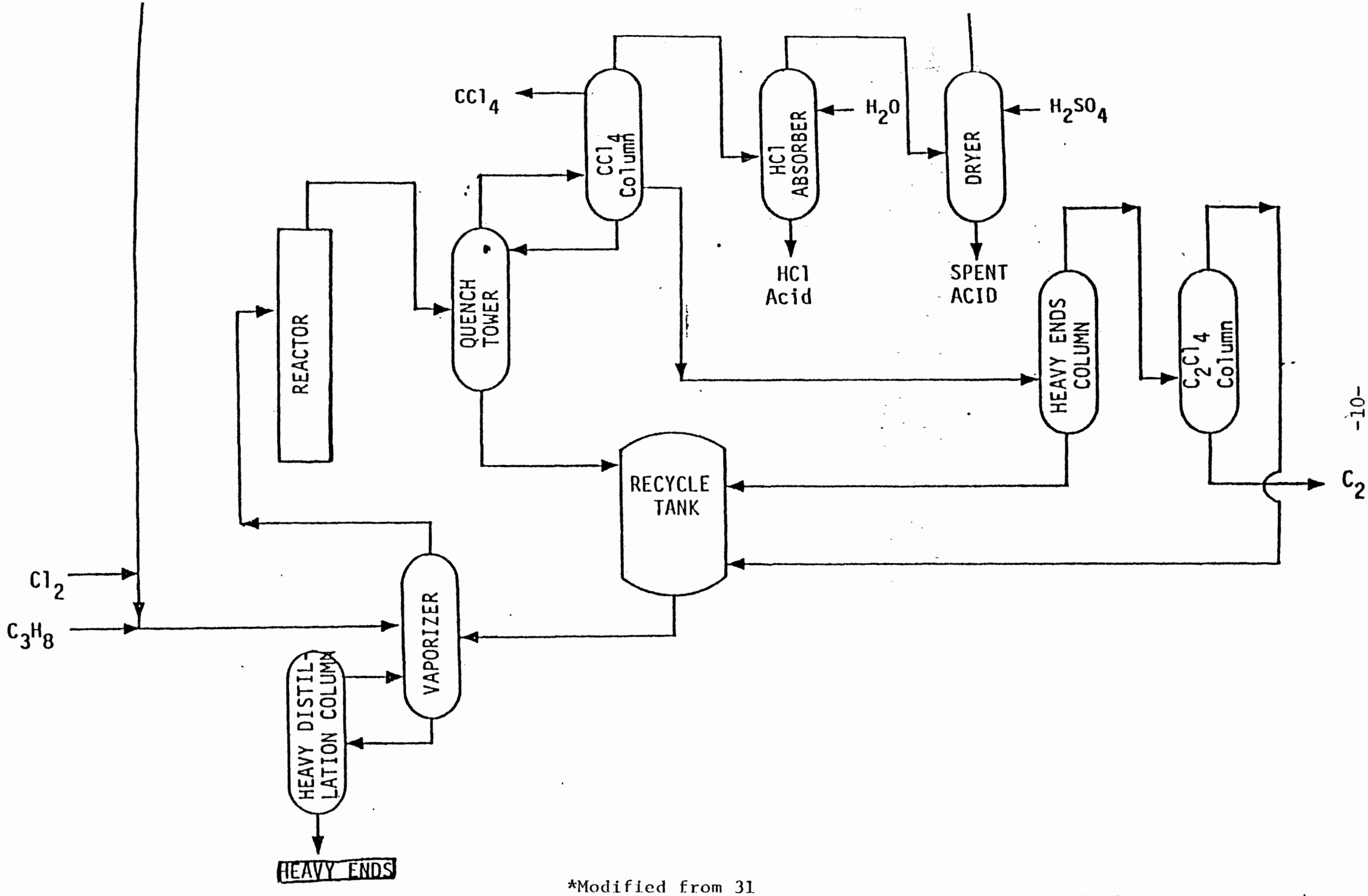

*Modified from 31

FIGURE 2. CARBON TETRACHLORIDE AND PERCHLOROETHYLENE MANUFACTURE VIA Chlorinolysis of Propane

withdrawn. Hydrogen chloride and chlorine are separated and scrubbed with water in a hydrogen chloride absorber to remove HCl as hydrochloric acid by-product. The carbon tetrachloride column returns bottom liquid that is rich in perchloroethene to the heavy ends column. Light ends from this column are recycled to the reactor. In the heavy ends column, the perchloroethylne-rich stream is distilled to remove the heavy ends that are returned for recycle. Overhead from the heavy ends column is fractionated in the perchloroethylene column where the desired quantity of perchlorethylene is removed as bottoms and the overhead, containing largely carbon tetrachloride, is sent to recycle. The final product mix is contgrolled by the amounts of product recycled to the reactor. Estimated emissions from this process are shown in Table 3.*

The reaction pathways for these waste constituents are as follows: Hexachloroethane results from the chlorination of product perchloroethylene. Free radical reactions will result in the formation of hexachlorobutadiene (see p. 8 where the reaction chemistry is described). Hexachlorobutadiene could also be formed by chlorination of ethylene radicals under chlorinolysis conditions. Hexachlorobenzene would result from the cyclization and chlorination of C_2 molecules under the high temperature reaction conditions via a Diels-Alder reaction, whereby a cyclic compound is formed from double bond systems.

*As presented in Table 3, little or no carbon tetrachloride was recorded found in the air, aqueous and solid emissions. However, based on industry process, this constituent is predicted to be present in the waste. Further, the presence of even very small concentrations of this very potent carcinogen are of concern to the Agency.

TABLE 3

ESTIMATED EMISSIONS FROM CARBON TETRACHLORIDE MANUFACTURE: Chlorinolysis of Propane

Species	EMISSIONS kg/Mg		
	Air	Aqueous	Solid
Carbon tetrachloride		trace	
Hexachloroethane			trace
Hexachlorobutadiene			3.3
Hexachlorobenzene			3.3
Tars			3.0
Sodium hydroxide		1.1	
			10

Source: Elkin, "Chlorinated Solvents," Process Economics Program Report No. 48, Stanford Research Institute, Menlo Park, CA, 1969

b. Chlorinolysis of hexachloroethane with simultaneous chlorination of perchloroethylene (4,2)

Expected waste constituents of concern from this process (Figure 4) are hexachlorobenzene, hexachlorobutadiene, hexachloroethane, and carbon tetrachloride.* Some carbon tetrachloride is expected to be present in distillation bottoms since it is the product and would not be completely removed from the bottoms. Hexachloroethane is a feedstock and thus is also expected to be found in the waste. Hexachlorobenzene will result from the cyclization and chlorination of C_2 molecules under high temperature pyrolysis conditions.

The final production process considered is the production of carbon tetrachloride by chloronation of carbon disulfide.

3. Carbon Tetrachloride by Chlorination of Carbon Disulfide (3)

Direct chlorination of carbon disulfide to carbon tetrachloride is a long-established process which, until challenged by chlorination of methane and chlorinolysis of hydrocarbons, was the sole source of carbon tetrachloride. Chlorination of carbon disulfide does have certain advantages: hydrocarbon co-products or by-products and hydrogen chloride are not formed. Because sulfur must be recovered and recycled however, this process is presumed to be integrated with a carbon disulfide production facility.

The overall chemistry of this process is represented by the following equations:

$$2CS_2+6Cl_2 \longrightarrow 2CCl_4+2S_2Cl_2$$

*Additional heavy chlorinated hydrocarbons will probably also be present, but their existence is more speculative since they would probably "crack" into lower molecular weight compounds under chlorinolysis conditions.

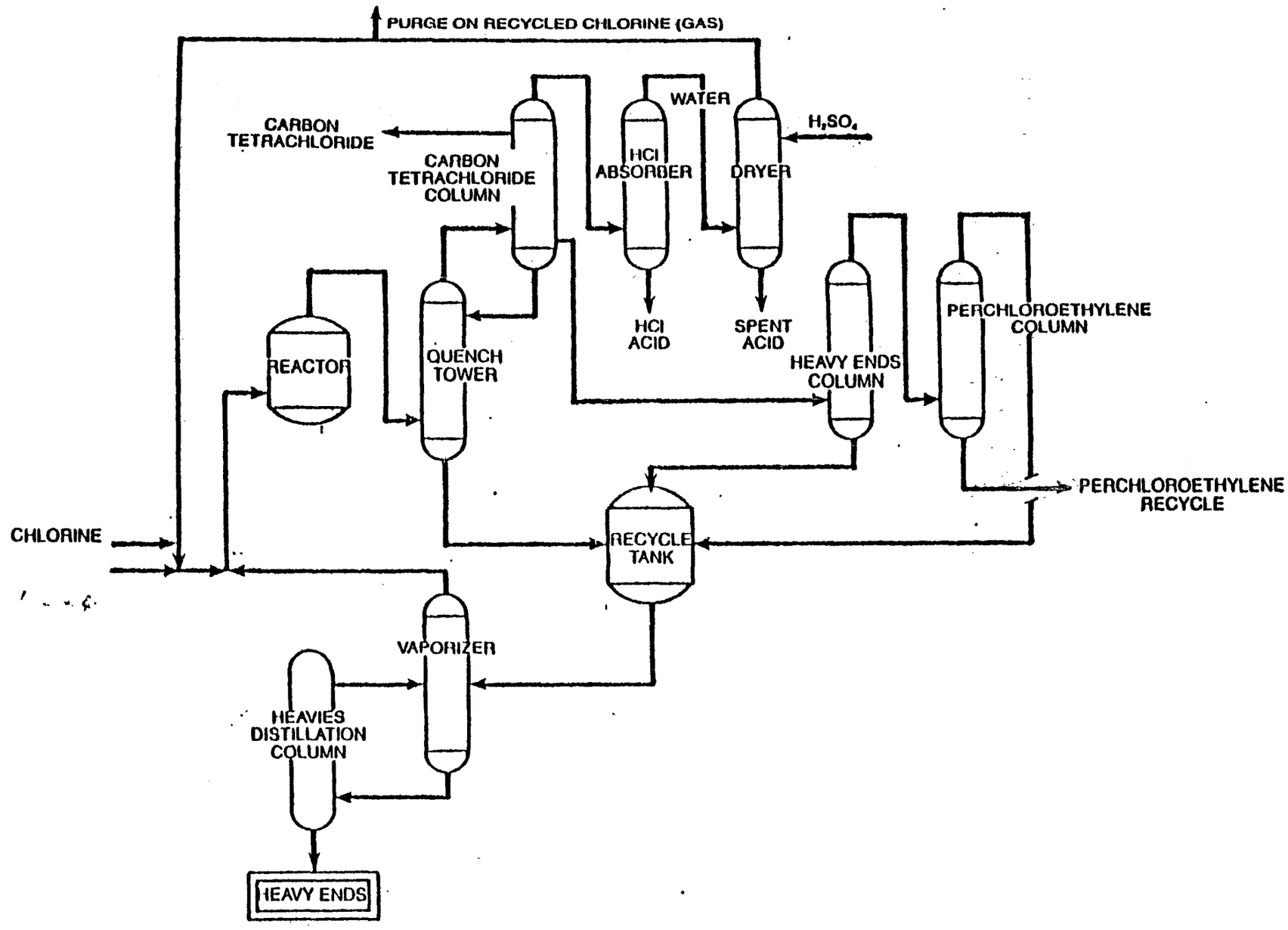

Figure 4. CARBON TETRACHLORIDE BY THE PYROLYSIS OF HEXACHLOROETHANE & PERCHLOROETHYLENE

(Modified from 4,2)

The sulfur monochloride formed reacts with a fresh feed of carbon disulfide to form additional carbon tetrachloride:

$$2S_2Cl_2+CS_2 \longrightarrow CCl_4+3S_2$$

This reaction, in contrast to the first reaction, goes only to about 75% completion. The sulfur formed is recyled to carbon disulfide production. Reaction yield is about 95% based on carbon disulfide.

Carbon disulfide, a recycle stream of carbon disulfide/carbon tetrachloride/sulfide monochloride from dechlorination, and chlorine (approx. 1% wt over the stoichiometric requirement) react in the chlorinator at an approximate temperature and pressure of 100°C and 1 atm., respectively. The reaction goes to near completion and the crude product consists principally of carbon tetrachloride and sulfur monochloride, and a small amount of carbon disulfide (>0.1% wt). Sulfur dichloride formation is minimized by the presence of the carbon disulfide.

The crude product is fractionated into an overhead stream of carbon tetrachloride and a bottom stream of sulfur monochloride and carbon tetrachloride. Chlorine is added to the bottom stream to form small amounts of sulfur dichloride which catalyzes the subsequent dechlorination reaction. The dechlorination reactor operates under reflux conditions using the bottom stream as a feedstock. After dechlorination, the reaction product is separated: the overhead stream ($CCl_4/CS_2/S_2Cl_2$) is recycled to the chlorination reactor; the bottom stream, which is largely sulfur, is purified and recycled to carbon disulfide production. Crude carbon tetrachloride, separated as an overhead stream from the distillation of the chlorination mixture, is washed with either a dilute solution of sodium hydroxide or a suspension of calcium hydroxide to decompose sulfur

monochloride and dichloride. This stream is distilled and water, carbon tetrachloride, and carbon disulfide are removed as an overhead stream. Water is decanted, and the organic layer distilled. The bottom stream from this column is sent to carbon tetrachloride storage.

When properly conducted, this process would probably be waste free. However, if conducted inefficiently, heavy ends could be generated consisting of sulfur monochloride and carbon tetrachloride, probably in equal concentrations. Obviously, the Agency is only listing this process when waste heavy ends are actually generated.

C. Waste Generation and Management

The distillation residue waste from the direct chlorination or chorinolysis of hydrocarbons thus consist of heavy chlorinated hydrocarbons, such as hexachlorobenzene, perchloroethylene, hexachlorobutadiene, carbon tetrachloride, and hexachloroethane. These wastes are generated in large quantities. Based on U.S.I.T.C 1978 production figures of 334,000 metric tons of carbon tetrachloride(35) and the waste emission factors set forth above, an estimated 3200 metric tons of waste is generated each year. This estimate may be conservative, since waste emission factors were not calculated for wastes from carbon tetrachloride production by pyrolysis of hexachloroethane. In any case, this is a significant annual quantity of waste generated, and it must further be remembered that this waste will accumulate in greater quantities over time.

Heavy ends from carbon tetrachloride production have typically been disposed of in drums in land disposal facilities, or have been incinerated.(4)

III. Discussion of Basis for Listing

A. Hazards Posed by the Waste

The waste constituents of concern, which as shown above are present in these wastes in substantial concentrations, are:

- Hexachlorobenzene
- Hexachlorobutadiene
- Carbon Tetrachloride
- Hexachloroethane
- Perchloroethylene

All of these substances except hexachloroethane have been identified by the Agency as being carcinogenic and they are all very toxic. Hexachlorobenzene is also a teratogen. Generation and accumulation of large quantities (over 3000 MT annually, see p. 16) of wastes containing these constituents is itself a reason for imposition of hazardous status. The large quantities of these contaminants pose the danger of polluting large areas of ground or surface waters. Contamination could also occur for long periods of time, since large amounts of pollutants are available for environmental loading. Attenuative capacity of the environment surrounding the disposal facility could also be reduced or used up due to the large quantities of pollutant available. All of these considerations increase the possibility of exposure to the harmful constituents in the wastes, and in the Agency's view, support a hazardous listing.

In light of the extreme danger posed by these waste constituents, and the large quantities of waste generated, a decision not to list these waste would be justified, if at all, only if waste constituents were demonstrably unable to migrate and persist. This is not the case, however, since most of these waste constituents have migrated and persisted in actual damage incidents, via both groundwater and air

exposure pathways.

Carbon tetrachloride, for example, has been identified as present in school and basement air at Love Canal, as has hexachlorbutadiene and perchloroethlyene . (Source: "Love Canal, Public Health Bomb", a Special Report to the Governor and Legislature, New York State Department of Health, 1978.) Carbon tetrachloride has also been implicated in two groundwater contamination incidents in Plainfield, Connecticut, where drinking water sources were adversely affected (Table 1, Reference 31).

Heaxchlorobutadiene, hexachlorbenzene and hexachlorethane also have been shown to migrate from waste disposal sites to groundwater. EPA conducted groundwater monitoring in the vicinity of an (unnamed) chemical waste disposal site in an effort to quantify migrating organic waste constituents. These waste constituents were all found to have migrated (Table 7.2, Reference 31).

Another incident illustrates even more dramatically the migraory potential of these waste constituents. Chemical wastes from Hooker Chemical's disposal sites at Montague, Michigan have migrated from landfills and underground injection wells, moved through and contaminated groundwater supplies, and contaminated a recreational lake. The contaminated plume is 2,000 ft. wide and extends for over 1 mile. Among waste constituents present in the plume are hexachlorobutadiene, hexachlorbenzene and carbon tetrachloride. (31)

Hexachlorobenzene may also pose a hazard through volatilization. A case history of environmental damage in which air, soil, and vege-

tation over an area of 100 square miles was contaminated by hexachlorobenzene (HCB) occurred in 1972.[7] There was volatilization of HCB from landfilled wastes and subsequent bioaccumulation in cattle grazing in the eventually contaminated areas. Accumulation in tissues of cattle occurred, so that the potential risk to humans from eating contaminated meat and other foodstuffs is significant.

These waste constituents thus have proven capable of migration, mobility and persistence, and are demonstratably capable of causing substantial hazard via groundwater, surface water and air exposure routes, if improperly managed. Disposal by incineration is another type of management which could lead to substantial hazard. Improper incineration can result in serious air pollution by the release of toxic fumes occuring when incineration facilities are operated in such a way that combustion is incomplete. In the incineration of wastes containing carbon tetrachloride, phosgene (a highly toxic gas) is likely to be emitted under incomplete combusion conditions.[32,33,34] These conditions can, therefore, result in a signifcant opportunity for exposure of humans, wildlife and vegetation, in the vicinity of these operations, to potentially harmful substances.

B. Health and Ecological Effects

1. Hexachlorobenzene

Health Effects - Hexachlorobenzene has been found to be carcinogenic in animals.[8,9] It has also been identified by the Agency as a compound which exhibits substantial evidence of being carcinogenic.

This chemical is reportedly teratogenic, known to pass through placental barriers, producing toxic and lethal effects in the fetus.(10) Chronic exposure to HCB in rats has been shown to result in damage to the liver and spleen.(11) It has been lethal in humans when ingested at one-twentieth the known oral LD_{50} dose for rats.(12) It has also been demonstrated that at doses far below those which are lethal, HCB enhances the body's capability to toxify rather than detoxify other foreign organic compounds present in the body through its metabolism.(13) Hexachlorobenzene is designated a priority pollutant under Section 307(a) of the CWA. Additional information and specific references on the adverse effects of hexachlorobenzene can be found in Appendix A.

Ecological Effects - Hexachlorobenzene is likely to contaminate accumulated bottom sediments within surface water systems and bioaccumulate in fish and other aquatic organisms.(6)

Regulations - Hexachlorobenzene is a chemical evaluated by CAG as having substantial evidence of carcinogenicity. Ocean dumping of of hexachlorobenzene is prohibited. An interim food contamination tolerance of 0.5 ppm has been established by FDA.

Industrial Recognition of Hazard - According to Sax, Dangerous Properties of Industrial Chemicals, HCB is a fire hazard and, when heated, emits toxic fumes.

2. Hexachlorobutadiene (HCBD)

Health Effects - Hexachlorobutadiene (HCBD) has been found to be carcinogenic in animals(14). It has also been identified by the

Agency as a compound which exhibits substantial evidence of being carcinogenic. It is an extremely toxic chemical [LD_{50} (rat)- 90 mg/kg] via ingestion. Upon chronic exposure of animals in tests conducted by the Dow Chemical Company and others, the kidney appears to be the organ most sensitive to HCBD[14,15,16]. Effluents from industrial plants have been found to have HCBD concentrations as high as 240 g/l,[19] more than 200 times the recommended criterion level. HCBD is considered a priority pollutant under Section 307(a) of the CWA. Additional information and specific references on the adverse effects of hexachlorobutadiene can be found in Appendix A.

Ecological Effects - HCBD is likely to contaminate accumulated bottom sediments within surface water systems and is likely to bioaccumulate in fish and other aquatic organisms[6].

The USEPA (1979) has estimated the BCF at 870 for the edible portion of fish and shellfish consumed by Americans. Hexachlorobutadiene is persistent in the environment[18].

Industrial Recognition of Hazard - Hexachlorobutadiene is considered to have a high toxic hazard rating via both oral and inhalation routes (Sax, Dangerous Properties of Industrial Materials).

3. Carbon Tetrachloride

Health Effects - Carbon tetrachloride is a very potent carcinogen[19] and has been identified by the Agency as a compound which exhibits substantial evidence of being carcinogenic. It has also been shown to be teratogenic in rats when inhaled at low concentrations.[20]

Chronic effects of this chemical in the human central nervous system have occurred following inhalation of extremely low concentrations [20 ppm][21] with death at 1000 ppm.[22] Adverse effects of carbon tetrachloride on liver and kidney functions[23] and on respiratory and gastrointestinal tracts[23,24] have also been reported. Death has been caused in humans through small doses.[25] The toxic effects of carbon tetrachloride are amplified by both the habitual and occasional ingestion of alcohol.[26] Especially sensitive to the toxic effects of carbon tetrachloride are obese individuals because the compound accumulates in body fat.[16] It also causes harmful effects in undernourished humans, those suffering from pulmonary diseases, gastric ulcers, liver or kidney diseases, diabetes, or glandular disturbances.[27] Carbon tetrachloride is a priority pollutant under Section 307(a) of the CWA. Additional information and specific references on the adverse effects of carbon tetrachloride can be found in Appendix A.

Ecological Effects - In measurements made during the National Organics Monitoring Survey of 113 public water systems sampled, 11 of these systems had carbon tetrachloride at levels at or exceeding the recommended safe limit.[28]

Regulations - OSHA has set a TWA for carbon tetrachloride at 10 ppm. Carbon tetrachloride has been banned under the Hazardous Substances Act by the Consumer Product Safety Commission.

Industrial Recognition of Hazard - According to Sax, Dangerous Properties of Industrial Materials, carbon tetrachloride is considered a high systemic poison through ingestion and inhalation.

4. Hexachloroethane

Health Effects - Hexachloroethane has been reported to be carcinogenic to animals, meaning that humans may be similarly affected[25]. Humans exposed to vapors at low concentrations for long periods have had liver, kidney and heart degeneration and central nervous system damage[26]. Hexachloroethane is slightly toxic via ingestion. It is a priority pollutant under Section 307(a) of the CWA. Additional information and specific references on the adverse effects of hexachloroethane can be found in Appendix A.

Regulations - OSHA has set a TWA for hexachloroethane at 1 ppm (skin).

Industrial Recognition of Hazard - According to Sax, Dangerous Properties of Industrial Materials, hexachloroethane has a moderate toxic hazard rating.

5. Perchloroethylene (Tetrachloroethylene)

Health Effects - Perchloroethylene (PCE) was reported carcinogenic to mice (36). It has also been identified by the Agency as a compound which exhibits substantial evidence of being carcinogenic. PCE is chronically toxic to rats and mice, causing kidney and liver damage (36,37,38), and to humans, causing impaired liver function (39). Subjective central nervous system complaints were noted in workers occupationally exposed to PCE (40). PCE is also reported acutely toxic in varyin degrees to several fresh and salt water organisms, and chronically toxic to salt water organisms (41,42).

IV. References

2. Kirk Othmer, Encyclopedia of Chemical Technology, Second Edition, 1968.

3. 1979 Directory of Chemical Products of the US., SRI.

4. Source Assessment: Chlorinated Hydrocarbons., Z.S. Kahn and T.W. Hughes. EPA-600/2-79-019g. August 1979.

5. Report No. 48 Chlorinated Solvents by Lloyd M. Elkin. February 1961. Process Economics Program SRI.

6. Technical Support Document for Aquatic Fate and Transport Estimates for Hazardous Chemical Exposure Assessments. 1980. U.S. EPA, Environmental Research Lab., Athens, GA.

7. U.S. EPA. Hazardous Waste Disposal Reports, No. 3, EPA/530/SW 151.3, 1976.

8. Cabral, J. R. P., et al. Carcinogenic activity of Hexachlorobenzene in hamsters. Tox. Appl. Pharmacol. 41:155 (1977).

9. Cabral, J. R. P., et al. 1978. Carcinogenesis study in mice with hexachlorobenzene. Toxicol. Appl. Pharmacol. 45:323.

10. Grant, D. L. et al. 1977. Effect of hexachlorobenzene on reproduction in the rat. Arch. Environ. Contam. Toxicol. 5:207.

11. Koss, G., et al. 1978. Studies on the toxicology of hexachlorobenzene. III. Observations in a long-term experiment. Arch. Toxicol. 40:285.

12. Clinical Toxicol. of Commercial Products - Acute Poisoning. Gleason, M. N. et al (1969) 3rd Ed., p. 76.

13. Carlson, G. P., 1978. Induction of cytochrome P-450 by halogenated benzenes. Biochem. Pharmacol. 27:361.

14. Kociba et al. Toxicologic Study of Female Rats Administered Hexachlorobutadiene or Hexachlorobenzene for 30 Days. Dow Chemical Company, 1971.

15. Kociba, R.J., Results of a Two-year Chronic Toxicity Study with Hexachlorobutadiene in Rats. Amer. Ind. Hyg. Assoc. 38: 589, 1977.

16. Schwetz, et. al., Results of a Reproduction Study in Rats Fed Diets Containing Hexachlorobutadiene. Toxicol. Appl. Pharmacol. 42:387, 1977.

17. Li, et. al., Sampling and Analysis of Selected Toxic Substances. Task 1B - Hexachlorobutadiene. EPA-560/6-76-015. USEPA, 1976.

18. U.S. EPA, 1979. Water-Related Environmental Fate of 129 Priority Pollutants. EPA-440/4-79-029b.

19. National Cancer Institute. Carcinogens Bioassay of Carbon Tetrachloride, 1976.

20. Schwetz, B. A., B. K. J. Leong and P. H. Gehring, "Embryo- and Fetotoxicity of Inhaled Cabon Tetrachloride, 1,1-Dichloroethane and Methyl Ethyl Ketone in Rats," Toxicolgy and Applied Pharmacology, Vol. 28, No. 3, June 1974, p. 452-464.

21. Elkins, Hervey B. The Chemistry of Industrial Toxicology. 1959. 2nd Ed. John Wiley & Sons: New York, p. 136.

22. Association of American Pesticide Control Officials, Inc. 1966 Ed. Pesticide Chemical Official Compendium, p. 198.

23. Texas Medical Association, Texas Medicine, Vol. 69, p. 86, 1973.

24. Davis, Paul A. "Carbon Tetrachloride as an Industrial Hazard," The Journal of the American Medical Association. Vol. 103, July-Dec. 1934, p. 962-966.

25. Dreisbach, Robert H. 1974. Handbook of Poisoning: Diagnosis and Treatment, 8th Ed. Lange Medical Publications, Los Altos, CA, p. 128.

26. U.S. EPA. Carbon Tetrachloride: Ambient Water Quality Criteria Document, 1979.

27. Von Oettingen, W.F., The Halogenated Hydrocarbons of Industrial and Toxicological Importance. In: Elsevier monographs on Toxic Agents, E. Browning, Ed., 1964.

28. U.S. EPA. Determination of Sources of Selected Chemicals in Waters and Amounts from these Sources, 1977.

29. National Cancer Institute. Bioassay of Hexachloroethane for Possible Carcinogenicity. No. 78-1318, 1978.

30. U.S. EPA. Chlorinated Ethanes: Ambient Water Quality Criteria, 1979.

31. Acurex Corp., 1980, "Chlorinated Hydrocarbon Manufacture: An Overview", pp. 44-59.

32. "Combustion Formation and Emission of Trace Species", John B. Edwards, Ann Arbor Science, 1977.

33. NIOSH Criteria for Recommended Standard: Occupational Exposure to Phosgene, HEW, PHS, COC, HIOSH, 1976.

34. Chemical and Process Technology Encyclopedia, McGraw Hill, 1974.

35. U.S. International Trade Commission, Synthetic Organic Chemical, 1979.

36. National Cancer Institute 1977. Bio Assay of Tetrachloroethylene For Possible Carcinogenicity. CAS No. 177-18-4, Nc I-C6-TR-13, DHEW Publication No. (NIH) 77-813.

37. Rowe, v.k, et al 1952. Vapor Toxicity Of Tetrachloroethylene For Laboratory Animal and Human Subjects. AMA Arch. Ind. Hyq. occup. med. 5: 566.

38. Klaasen, c.d., and g.c. place 1967. Relative Effects Of Chlorinated Hydrocarbons On Liver and Kidney Function In Dogs. Toxicol. Appl. Pharmocol.

39. Coler, H. R., ano H. R. Rossmiller. 1953 Tetrachloroethylene Exposure In a Small Industry. Ind. hyg. med. 8:227

40. Medek, V. and J. Kavarik. 1973. The Effects of Perchloroethylene on the Health of Workers. Pracovni Lekarstvi. 25:339

41. U. S. EPA 1978. In-depth Studies on Health and Environmental Impacts of Selected Water Pollutants. Contract No. 68-01-4646.

42. U. S. EPA 1979. Tetrachloroethylene Amblent Water Quality criteria (Draft).

LISTING BACKGROUND DOCUMENT

EPICHLOROHYDRIN PRODUCTION

Heavy ends (still bottoms) from the purification column in the production of epichlorohydrin. (T)

I. Summary of Basis for Listing

Heavy ends from the fractionator column for the production of epichlorohydrin contain carcinogens, mutagens, and toxic organic substances. These include epichlorohydrin, trichloropropane and dichloropropanol, and the chloroethers, as pollutants of concern.

The Administrator has determined that the solid waste from epichlorohydrin production may pose a substantial present or potential hazard to human health or the environment when improperly transported, treated, stored, disposed of or otherwise managed, and therefore should be subject to appropriate management requirements under Subtitle C of RCRA. This conclusion is based on the following considerations:

1. The heavy ends from the production of epichlorohydrin contain epichlorohydrin and chloroethers which have been identified by EPA's Cancer Assessment Group as substances exhibiting substantial evidence of carcinogenicity. These compounds have also been reported in the literature to show mutagenic potential. The waste also contains trichloropropane and dichloropropanols which are very toxic.

2. Approximately 12,500 tons of the heavy bottoms were generated in 1978 by two manufacturers at three locations along the Gulf Coast.

3. The heavy wastes are stored in holding ponds prior to incineration; during storage there is the potential for ground and surface water contamination by leaching. Epichlorohydrin in the waste also would tend to volatilize and could present an air pollution hazard. If incineration

is incomplete, airborne dispersion of hazardous vapors presents a potential of human risk.

4. Incidents of epichlorohydrin contamination of water supplies have occurred.

II. Sources of Wastes and Typical Disposal Practices

A. Industry Profile

Epichlorohydrin is manufactured by Dow, U.S.A. at Freeport, Tex. and by Shell Chemical Co. at Deer Park, Tex., and Norco, La.[25] The capacities of these plants range from 55 to 275 million pounds per year. About 470 million pounds of epichlorohydrin were produced in 1978.[26,27]

Epichlorohydrin is used mainly as an intermediate for the manufacture of glycerin and epoxy resins.[25] It is also used in the manufacture of plasticizers, surfactants, stabilizers, and ion exchange resins.[25] Growth is expected at 6 to 7% per year.[25]

B. Manufacturing Process

Epichlorohydrin is produced by the following reaction sequence:

Step 1:

$$\underset{\text{(Chlorine)}}{Cl_2} + \underset{\text{(Water)}}{H_2O} \longrightarrow \underset{\text{(Hypochlorous Acid)}}{HOCl} + \underset{\text{(Hydrochloric Acid)}}{HCl}$$

Step 2:

$$\underset{\text{(allyl chloride)}}{CH_2 - CH-CH_2Cl} + \underset{\substack{HCl \\ \text{hypochlorous acid} \\ \text{and hydrochloric} \\ \text{acid}}}{HOCl} \longrightarrow \underset{\text{1,2-dichloropropanol-1)}}{CH_2OHCHClCH_2Cl\ (65\text{-}70\%)} + \underset{\text{(1,3-dichloropropanol-}}{CH_2ClCHOHCH_2Cl(30\text{-}55\%}$$

Step 3:

$$\underset{\text{(1,2-dichloropropanol-1)}}{CH_2OHCHClCH_2Cl} + \underset{\text{(1,3-dichloropropanol-2)}}{CH_2ClCHOHCH_2Cl} + NaOH \longrightarrow \underset{\text{(Epichlorohydrin)}}{CH_2-CH-CH_2Cl} + NaC$$

By-products produced in small quantities are 1,2,3-trichloropropane ($CH_2Cl\ CHClCH_2Cl$) and chloro-ethers such as:

$(CH_2Cl-CHCl-CH_2)_2 - O$ — bis-2,3-dichloropropyl ether

$[(CH_2Cl)_2 - CH]_2 - O$ — bis-1,3-dichloropropyl ether

A process flow diagram is shown in Figure 1 attached.

The mixture of hypochlorous acid and hydrochloric acid reactants is produced by absorbing chlorine in water. This acid mixture plus allyl chloride are then fed to the reactor. After chlorination, the reaction mixture (containing the dichloropropanols, some feed materials and reaction by products) is sent to the separator. The top aqueous layer containing hydrochlorie and hypochlorous acids is then recycled to the absorber; the bottom organic layer is sent to the dehydrochlorinator where the dichloropropanols are dehydochlorinated using sodium hydroxide.

The reactant mixture from the dehydrochlorinator is steam stripped. An azeotropic mixture is formed consisting of water and crude epichlorohydrin. This mixture is taken overhead, condensed, and sent to a liquid/liquid separator.

(290-299 not used)

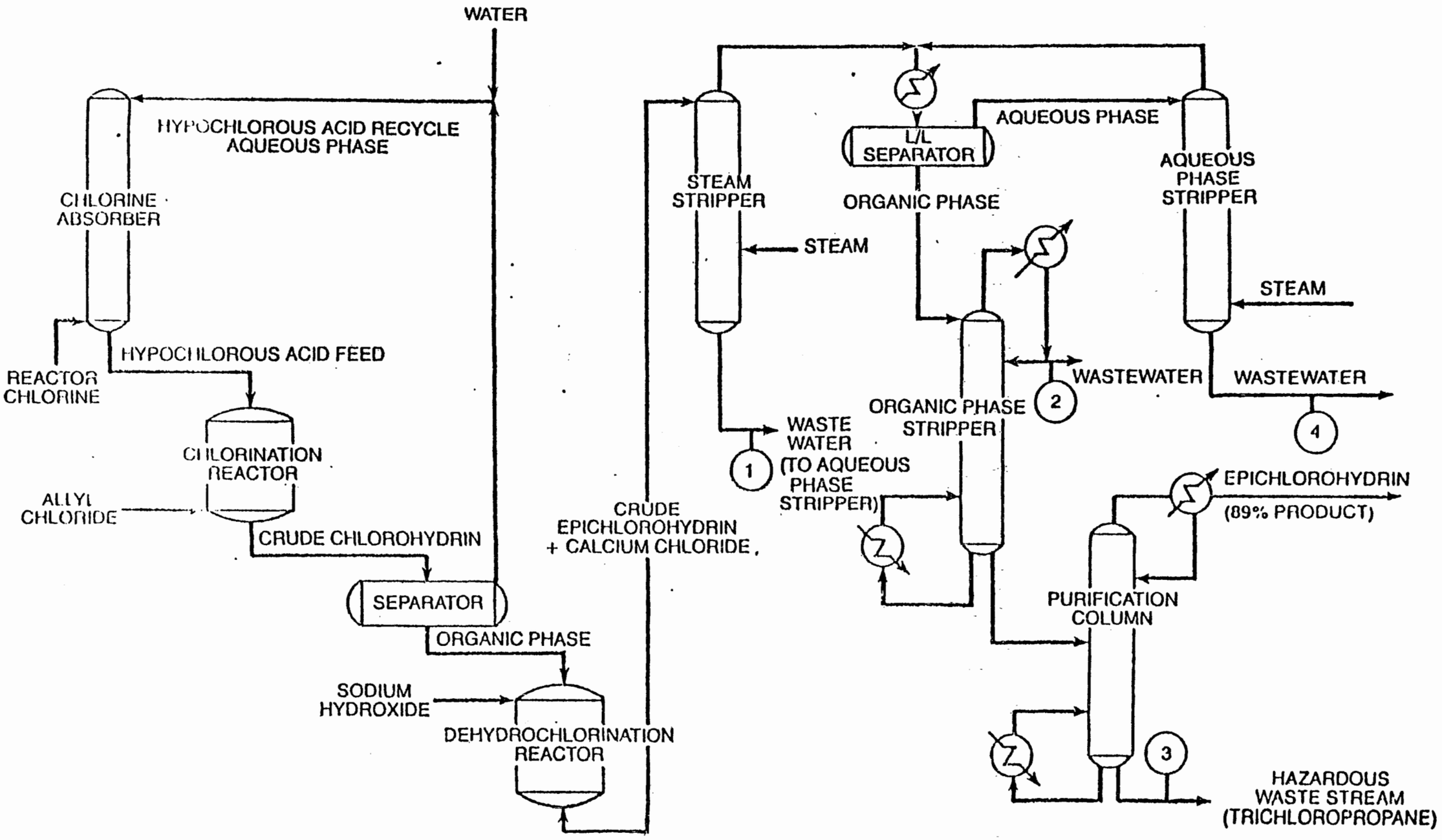

Figure 1: EPICHLOROHYDRIN FROM ALLYL CHLORIDE VIA DEHYDROCHLORINATION OF DICHLOROHYDRINS

The waste water from the bottom of the steam stripper[1] is stripped in the aqueous phase stripper where small amounts of epichlorohydrin are recovered overhead and recycled to the steam-stripper condenser; the bottom stream is discharged as water waste.*

The bottom organic phase from the liquid/liquid separator is fed to the organic phase stripper where residual water is removed overhead.[2] The bottom stream of crude epichlorohydrin is fed to the purification column where it is purified by fractionation[3] Purified epichlorohydrin is distilled overhead. The bottom stream from the purification column is the waste stream of concern in this document.

C. Waste Generation and Management

The waste stream from this process is the heavy organic bottoms (stream 3) from the product purification column. Three plants (two in Texas, one in Louisiana) generated 12,500 tons of heavy ends (still bottoms) in the production of 469.6 million lbs. of epichlorohydrin in 1978[26,27]. The primary disposal technique (1979) was reported to be incineration. It is assumed, based on usual waste management practice, that the heavy ends are stored in holding ponds or other temporary storage facilities prior to incineration.

III. Discussion of Basis for listing

A. Hazards Posed by the Waste

Epichlorohydrin purification column bottoms typically contain the following contaminants in the indicated concentrations:[27]

*This water stream is not presently listed as hazardous.

	Percent
Epichlorohydrin	2
Chloroethers	14
Trichloropropane	70
Dichloropropanol	10
Chlorinated aliphatics	4
	100

The waste constituents of concern are epichlorohydrin, the chloroethers, trichlorpropanel and dichloropropanol. Epichlorhydrin has been identified as a substance exhibiting substantial evidence of carcinogenicity by EPA's Carcinogen Assessment Group. It is also an animal mutagen and is very toxic. The chloroethers are likewise recognized by the Agency as known animal and likely human carcinogens. Their toxicity is likewise high. (See pp. 9-13 following.) Trichloropropane and dichloropropanol are very toxic. Large quantities are therefore available for environmental release in high concentrations.

These waste constituents are present in very substantial concentrations and are generated in large quantities (12,500 tons in 1978). There is thus a strong likelihood that the waste constituents will reach environmental receptors and cause substantial hazard if waste constituents are mismanaged.

Waste mismanagment may certainly occur. As noted above, the primary disposal for this waste is by incineration prior to which the waste may be stored in holding ponds or other temporary storage containers. Disposal by incineration, if mismanaged, could result in serious air pollution through release of toxic fumes. This may occur when incineration facilities are operated in such a way that combustion is incomplete (i.e. inadequate conditions of temperature mixing and residence time) resulting in airborne dispersion of hazardous vapors containing waste constituents of concern, as well as other newly formed harmful organic substances. Phosgene is an example of a partially combusted chlorinated organic which is produced by the decomposition of chlorinated organics by heat.[32,33,34] This could present a significant opportunity for exposure of humans, wildlife and vegetation in the vicinity of these operations to risk through direct contact and also through pollution of surface waters.

Temporary storage, if not properly managed, may also lead to the release of harmful constituents. Thus, if holding ponds lack proper flood control design features, there is a danger that the organics, during periods of heavy precipitation could be emitted due to flooding of the ponds. Should flooding occur, epichlorohydrin is stable enough to be transported to surface waters. (Appendix B) This eventually could result in drinking water contamination. Actual contamination of

a public water supply by epichlorohydrin occured on January 23, 1978, when a tank car derailed, spilling 197,000 pounds of epichlorohydrin in West Virginia.* Nearby wells at a depth of 25 feet were heavily contaminated, demonstrating ability to be mobil in soils. A similar hazard could result if epichlorohydrin-containing wastes were disposed in an uncontrolled pond or lagoon.

The chloroethers are also capable of significant migration via surface water pathways.(4) They have been found in surface and groundwaters at concentrations exceeding the USEPA recommended maximum allowable concentration levels in drinking water of 0.42mg/l, demonstrating a propensity to migrate and persist.(6)**

Waste constituents might also escape from the holding pond via a groundwater pathway if storage is improper (for instance using ponds in locations with permeable soils). Epichlorhydrin is highly soluble (66,000 ppm), and is thus capable of migration. It absorbs to organic constituents in soil, and so mobility would be high where organic content is low.(28) The chloroethers are also highly soluble (Appendix B) and, although tending to absorb to soils, have been shown to be mobile and persistent enough to be found in groundwater at concentrations exceeding the proposed human health water quality criteria, as noted above.**

---

* OSW Hazardous Waste Division, Hazardous Waste Incidents, unpublished, open file, 1978.

* The Agency is not using these standards as quantitative benchmarks, but is citing them to give some indication that very low concentrations of these contaminants may give rise to substantial hazard.

From the holding ponds or in surface water, most of the chlorinated propanols would undergo hydrolysis and biodegradation. The dissolved portion, however, could move with a water front through the soil profile. Under some conditions, the chlorinated propanols could reach a ground water aquifer (Appendix B). Degradation of chlorinated propanols in groundwaters would be much slower as evidenced by the observance of many related chlorinated ethanes, ethylenes, in Love Canal leachate, methanol, ehanol and isopropyl alcohol some 30 years after disposal. (29, 30, 31)

Data show that chemical analogs, dichloroethane[7] and dibromochloropropane,[8] have permeated the soil mantle to contaminate ground water, again suggesting a similar behavior for propanols. In addition the chloropropanols tend to bioaccumulate in aquatic organisms,[9] thus increasing potential exposure to higher levels of the food chain, including man.

Epichlorohydrin could also pose a threat via an inhalation exposure pathway due to its relatively high volatility. [28] Thus, lack of adequate cover could result in air pollution to surrounding areas.

B. Health and Ecological Effects

1. Epichlorohydrin

Health Effects - Epichlorohydrin has been demonstrated to be carcinogenic in animals[1] upon inhalation of vapors. This compound has also been recognized by the Agency as a chemical compound which has exhibited substantial evidence of carcinogenicity. [35] Epichlorohydrin is very toxic [oral rat LD_{50}=90mg/Kg]. Both respiratory cancers and leukemia are in excess among some exposed worker populations.[10,11] Epichlorohydrin vapor also has been demonstrated to induce aberrations in humans and animal chromosomes[12,13] and has induced birth defects in animal studies conducted by the Dow Chemical Company. It is a known mutagen to non-mammalian species.[7] Several investigators have found that epichlorohydrin possesses anti-fertility properties[10]. Altered reproductive function has been reported for workers occupationally exposed to epichlorohydrin. Dow Chemical Company researchers have observed degenerative changes in nasal tissue; severe kidney and liver damage has also been found in animals exposed to vapors of epichlorohydrin.[16,17] Additional information and specific references on the adverse effects of epichlorohydrin can be found in Appendix A.

Regulatory Recognition of Hazards - The OSHA time weighted average for skin contact with epichlorohydrin in air is 5 ppm. DOT requires a label warning that this chemical is a poison and a flammable liquid.

Industrial Recognition of Hazards - Epichlorohydrin is intensely irritating and moderately toxic by the oral, percutaneous and subcutaneous routes as well as by inhalation of the vapors (Fassett and Irish, Industrial Hygiene and Toxicology). Plunkett considers it highly toxic in his Handbook of Industrial Toxicology.

2. Chloroethers - bis (chloromethyl) ether and bis (2-chloroethyl) ethers

Health Effects Both bis (chloromethyl) ether and bis (2-chloroethyl) ethers are identified as carcinogens in animals[18,19] under laboratory conditions. These chemicals have also been recognized by the Agency as demonstrating substantial evidence of carcinogenicity. Bis (chloromethyl) ether is very toxic [oral rat LD_{50}=210 mg/Kg; inhalation rat LD_{50}=7ppm/7h]. Bis (2chloroethyl) ether is also very toxic (oral rat LD_{50}=75mg/Kg]. Epidemiological studies of workers in the United States, Germany and Japan who were occupationally exposed to both ethers indicate that they are human carcinogens.[20] They have also been shown to be mutagens in bacterial screening systems.[20] Additional information and specific references on the adverse effects of chloroethers can be found in Appendix A.

Regulatory Recognition of Hazard - Chloroethers are designated as priority pollutants under Section 307(a) of the CWA. Bis (chloroethyl) ether has a designated OSHA ceiling of 15 ppm. Bis (chloromethyl) ether is designated by OSHA as a carcinogen. Chlormethyl ether is designated by OSHA as a carcinogen and is required by DOT to carry labels that say "flammable liquid" and "poison".

Industrial Recognition of Hazard - Sax (Dangerous Properties of Industrial Materials) states that bis (chloromethyl) ether has an unknown systemic toxic hazard rating but it is a carcinogen. Bis 2 (chloroethyl) ether is highly toxic via ingestion, inhalation and skin absorption. Both chemicals are listed as priority pollutants by the EPA.

3. Trichloropropane

Health Effects - 1,2,3-Trichloropropane is a strong irritant and can be toxic by oral ingestion, inhalation, or dermal application.[21,22] Trichloropropane is very toxic [oral rat LD_{50}=320 mg/Kg]. Tsulaya et al[23] observed significant changes in central nervous system function, as well as enzyme changes in blood, liver, and lungs. Additional information and specific references on the adverse effect of trichloropropane can be found in Appendix A.

Regulations - The OSHA TWA for trichloropropane in air is 50 ppm.

Industrial Recognition of Hazard - Trichloropropane is designated in Sax, Dangerous Properties of Industrial Materials, as a highly toxic skin irritant, moderately toxic systemic poison via oral, inhalation and skin absorption routes and as a cumulative toxin.

4. Dichloropropanols

Health Effects - Both industrially occurring isomers, 1,3-dichloropropanol-2 [oral rat LD_{50}=90 mg/Kg] and 1,2-dichloropropanol-3 [oral rat LD_{50}= 490 mg/Kg] are very toxic to laboratory animals, causing systemic as well as local toxic effects. The toxic symptoms caused by the 1,3 isomer have

been compared to that of the liver toxin carbon tetrachloride which causes acute and often irreversible hepatic failure. Both compounds are potent skin and lung irritants, absorbed by all routes of exposure and tend to accumulate in the organism.[24] Additional information and specific references on the adverse effects of dichloropropanols can be found in Appendix A.

Industrial Recognition of Hazard - Dichloropropanol is designated in Sax, Dangerous Properties of Industrial Materials as moderately toxic via inhalation and highly toxic via ingestion[24].

IV. References

1. Nelson, N. Communication to the regulatory agencies of preliminary findings of a carcinogenic effect in the nasal cavity of rats exposed to epichlorohydrin. New York University Medical Center, letter dated 28 March 1977.

2. Nelson, N. Updated communication to the regulatory agencies of preliminary findings of a carcinogenic effect in the nasal cavity of rats exposed to epichlorohydrin. New York University Medical Center, letter dated 23 June 1978.

3. Peterson, EPA, OAQPS, 1979.

4. Zoeteman, B. C. J., K. Harmsen, J. B. H. J. Linders, C. F. H. Morra and W. Sloof. Persistent Organic Pollutants in River Water and Ground Water of the Netherlands. L979. Paper presented at 3rd Int'l Symposium on Aquatic Pollutants. Jekyll Island, GA,.

5. Subsurface Transport and Fate of WS-12 Epichlorohydrin, Ada Oklahoma Lab, 1980.

6. U.S.E.P.A. Preliminary Assessment of Suspected Carcinogens in Drinking Water. Report to Congress. USEPA, 1975.

7. De Walle, F. P., and E.S. K. Chian. 1979. Detection of Trace organics in well Water Near a Solid Waste Landfill. Environ. Sci. Technol. (In Press).

8. Weisser, P. Aug. 23, 1979. News Release, Department of Health Services, Sacramento, CA.

9. Clement Associates, Inc. Dossier on Chloropropanes (Draft), Contract No. EA8AC013, prepared for TSCA Interagency Testing Committee, Washington, D.C. August, 1978.

10. Enterline, P. E. "Mortality experience of workers exposed to epichlorohydrin." In press: Jour. Occup. Medicine, 1979.

11. Enterline, P. E. and V. L. Henderson. Communication to Medical Director of the Shell Oil Company: Preliminary finding of the updated mortality study among workers exposed to epichlorohydrin. Letter dated 31 July 1978. Distributed to Document Control Office, Office of Toxic Substances (WH-557), USEPA.

12. Syracuse Research Corporation. Review and evaluation of recent scientific literature relevant to an occupational standard for epichlorohydrin. Report prepared by Syracuse Research Corporation for NIOSH, 1979.

IV. References (Continued)

13. Santodonato et al. "Investigation of selected potential environmental contaminants: Epichlorohydrin and epibromohydrin." Syracuse Research Corporation. Prepared for the Office of Toxic Substances, USEPA, 1979.

14. Halen, J. D. "Post-testicular and anti-fertility effects of epichlorohydrin and 2,3-epoxypropanol." Nature 226:87, 1970.

15. Cooper et al. "Effects of alpha-chlorohydrin and related compounds on the reproduction and fertility of the male rat." J. Reprod. Fert. 38:329, 1974.

16. Quast, J. F. et al. "Epichlorohydrin - subchronic studies I. A 90-day inhalation study in laboratory rodents." January 12, 1979. Unpublished report from Dow Chemical Company, Freeport, Texas.

17. Quast, J. F. et al. "Epichlorohydrin - subchronic studies II. A 12-day study in laboartory rodents." January 12, 1979. Unpublished report from Dow Chemical Company, Freeport, Texas.

18. Innes et al. "Bioassay of pesticides and industrial chemicals for tumorigenicity in mice, A preliminary note." J. Nat'l. Cancer Inst. 42:1101, 1969.

19. Juschner et al. "Inhalation carcinogenicity of alpha haloethers III. Lifetime and limited period inhalation studies with bis(chloromethyl) ether at 0.1 ppm." Archives of Environmental Health 30:73, 1975.

20. U.S.E.P.A. Chloroaklyl Ethers: Ambient Water Quality Criteria, 1979.

21. Hawley, G. G., 1977. Condensed Chemical Dictionary, 9th Edition. Van Nostrand Reinhold Co.

22. NIOSH 1978. Registry of Toxic Effects of Chemical Substances.

23. Tsulaya, V. R. et al, 1977. Toxicology Features of Certain Chlorine Derivatives of Hydrocarbons. Gig. Sanit. 8:50-53.

24. Sax, I., Dangerous Properties of Industrial Materials.

25. Kirk-Othmer Encyclopdia of Chemical Technology. 2nd Ed. Vol. 1. John Wiley and Sons, New York, 1970.

26. Peterson, C. A., "Emissions Control Options for the Synthetic Organic Chemicals Manufacturing Industry: Glycerin and It's Intermediates." Hydroscience, Inc. (Draft report prepared for EPA/OAQPS, March 1979.

27. Gruber, G. I., "Assessment of Industrial Hazardous Waste Practices, Organic Chemicals, Pesticides and Explosives Industries." TRW, Inc. USEPA, SW 118c, January, 1976, p. 5-20.

28. Dawson, English and Petty, 1980. Physical Chemical Properties of hazardous Waste Constituents.

29. Barth, E.F., and Cohen, J.M., "Evaluation of Treatability of Industrial Landfill Leachate, unpublished report, U.S. EPA, Cincinatti. (Nov., 1978).

30. O'Brien, R.P., City of Niagra Falls, N.Y., Love Canal Project, Unpublished Report, Calgon Corp., Calgon Environmental Systems Division, Pittsburgh, Pa.

31. Rcera Research, Inc., P:riority Pollutant Analyses prepared for Nuco Chemical Waste Systems, Inc., unpublished report, Tonawanda, N.Y., 1979.

32. "Combustion Formation and Emission of Trace Spcies", John B. Edwards, Ann Arbor Science, 1977.

33. NIOSH Criteria for Recommended Standard: Occupational Exposure to Phosgene, HEW, PHS, COC, HIOSH, 1976.

34. Chemical and process Technology Encyclopedia, McGraw Hill, 1974.

35. Carcinogen Assessment Group's List of Carcinogens, April 22, 1980.

LISTING BACKGROUND DOCUMENTS

ETHYL CHLORIDE PRODUCTION

Heavy Ends from the Fractionation Column in Ethyl Chloride Production (T)

I. SUMMARY OF BASIS FOR LISTING

The heavy ends or bottoms from the fractionation column used in the production of ethyl chloride contains 1,2-dichloroethanene trichlorethylene and many other heavy chlorinated organics. The Administrator has determined that these sludges are solid wastes which may pose a present or potential hazard to human health and the environment when improperly transported, treated, stored, disposed of or otherwise managed and therefore should be subject to appropriate management requirements under Subtitle C of RCRA. This conclusion is based on the following considerations:

(1) The fractionation column bottom or heavy end sludges contain 3% ethyl chloride*, 22% dichloroethanes, 32% trichloroethylene, and 43% heavy chlorinated organics. 1,2-Dichloroethane is a suspected carcinogen and trichloroethylene and many of the heavy chlorinated organics in the wastes have been identified by the Agency as exhibiting substantial evidence of being carcinogenic.

(2) The wastes traditionally have been managed by land disposal. Information obtained from telephone contacts with manufacturers** indicates that some of the wastes are also incinerated in thermal destruction facilities. The substances in the wastes, if not managed properly, could be emitted to the air if the wastes are inadequately incinerated or improperly land disposed, or could leach from improperly managed or designed landfills and injection wells to reach humans and other environmental receptors. Hexachlorobenzene (a typical heavy chlorinated organic in column bottoms) has been shown to bioaccumulate in animal and human tissues through inhalation following mismanagement

*The Agency is aware that ethyl chloride is highly ignitable, with a flash point of -58°F. Generators are, of course, responsible for determining if these wastes are ignitable, even though listed for toxicity only.

**Those manufacturers requested to remain anonymous.

during transportation and improper disposal. Trichloroethylene (another waste component) has shown to have leached into well water from waste disposal sites.

(3) A large quantity (a combined total of about 35,000 metric tons per year) of these wastes is generated annually.

II. INDUSTRY PROFILE

In 1979, there were reported to be six plants in the U.S. with capacity to produce about 330,000 metric tons/year of ethyl chloride.[1] Two of the plants are located in Texas, two in Louisiana, one in New Jersey and one in California. The average plant produces about 64,000 metric tons/year. The range for individual plants is about 35,000 to 100,000 metric tons/year. Since most of the ethyl chloride produced is used for the manufacturing of tetraethyl lead, production is on the decline.

III. MANUFACTURING PROCESS DESCRIPTION

Most of the ethyl chloride produced is manufactured by catalytic hydrochlorination of ethylene.[1] A process flow diagram is given in Figure 1. Ethylene and anhydrous hydrogen chloride gases are mixed and reacted at 35-40°C in the presence of an aluminum chloride catalyst. The reaction is exothermic. The vaporized products are fed into a column or "flash drum" where crude ethyl chloride is separated from heavier polymers. The polymer bottoms are a salable by-product. Finally, the crude ethyl chloride is refined by fractionation. The fractionation waste (on figure 1), or heavy ends, is composed of 3% ethyl chloride, 22% dichloroethanes, 32% trichloroethylene, and 43% heavy chlorinated organics.[2] This is the waste stream listed in this document.

IV. WASTE GENERATION AND MANAGEMENT

The heavy ends from the fractionating column are generated at a rate

BASIS: 1 KG ETHYL CHLORIDE

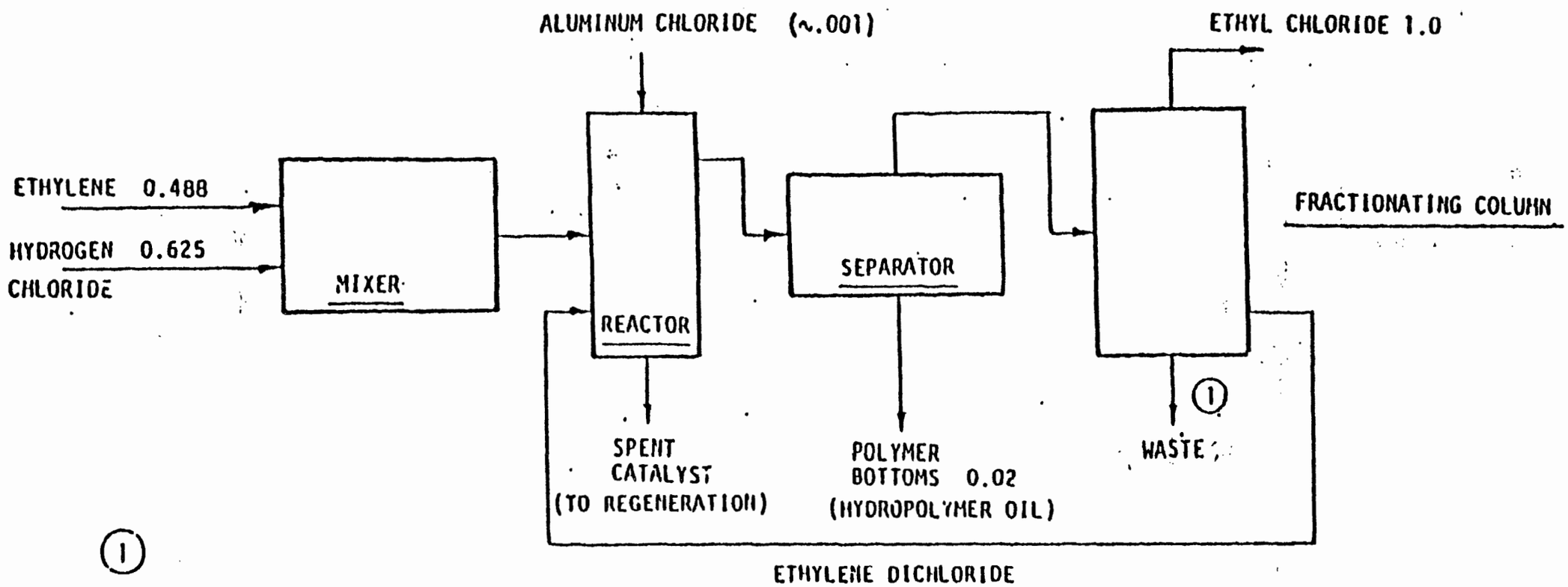

1

WASTE FROM FRACTIONATING COLUMN-LIQUID

ETHYL CHLORIDE 0.003
DICHLOROETHANES 0.02
TRICHLOROETHYLENE 0.03
HEAVY CHLORINATED ORGANICS 0.04

Source: Reference (2)

Figure 1 Ethyl Chloride Manufacture

of about .093 tons per ton of ethyl chloride produced.[2] The total quantity of waste produced is, therefore, approximately 35,000 metric tons per year (based on the 1979 production figures).

The wastes from ethyl chloride manufacture are usually combined for disposal with chlorinated hydrocarbon wastes of similar composition generated in the manufacture of chlorinated solvents (chloromethanes) at the same plant site. In 1973, it was reported that the combined wastes were sent to land disposal.[2] More recent information indicates that some wastes are being incinerated in thermal destruction facilities (see p. 1, above).

VI. DISCUSSION OF BASIS FOR LISTING

A. HAZARDOUS POSED BY THE WASTE

As indicated earlier, the heavy ends from fractionation in ethyl chloride production contain 22% dichloroethanes, 32% trichloroethylene, and 43% heavy chlorinated organics (such as hexachlorobutadiene, and hexachlorobenzene[2]) many of which have been identified by the Agency as substances which exhibit substantial evidence of carcinogenicity. Further, all of the chlorinated organic constituents in the waste demonstrate acute aquatic toxicity, generally showing increasing toxicity with increasing chlorination. Should these compounds reach environmental recepters, the potential for resulting adverse effects would be extremely high.

These waste constituents are capable of migration. The solubility in water of these chlorinated compounds is quite high: dichloroethane - 8700 ppm[4], trichloroethylene - 1000 ppm[5], and hexachlorobenzene - 500 ppm[4]. The high solubilities of these constituents indicate a

strong propensity to migrate from inadequate land disposal facilities. Thus, improperly constructed or mangaged landfills (for example, landfills located in areas with permeable soils, or with inadequate leachate control practices) could easily fail to impede leachate formation and migration.

Once released from the matrix of the waste, these constitutents could migrate through the soil to ground and surface waters utilized as drinking water sources. A number of actual damage incidents documenting the leaching of constituents from waste sites and subsequent to ground-water contamination (see Damage Incidents pp. 7-8) have occurred. These damage incidents also confirm that many of these chlorinated compounds are environmentally persistent, since they obviously persist in the environment long enough to reach environment receptors.

Another problem which could result from improper landfilling of these wastes is the potential for contaminants to volatilize into the surrounding atmosphere. Volatilized waste constituents, hexachlorobenzene in particular, have caused actual damage (see Damage Incidents, 1-3, pp. 6-7). 1,2-Dichloroethane (60 mm Hg at 20°C)[4] is also highly volatile, and therefore, could volatilize and thus present an air pollution problem if improperly managed (for example, if landfilled without adequate cover).

More recent information indicates that some wastes are being incinerated in thermal destruction facilities. Inadequate incineration conditions (temperature plus residence time) can result in incomplete combustion and air emission of the harmful chemical substances contained in the wastes as well as degradation products.

The large quantities (a combined total of about 35,000 metric tons per year) of this waste disposed of annually is another area of concern to the Agency. As previously indicated, there are substantial concentrations

of these toxic constitutents (22% dichloroethanes, 32% trichloroethylene, 43% heavy chlorinated organics) in the waste stream. The large quantities of these contaminants pose the danger of polluting large areas of ground and surface waters. Contamination could also occur for long periods of time, since large amounts of pollutants are available for environmental loading. All of these considerations increase the possibility of exposure to the harmful constituents in the wastes.

B. DAMAGE INCIDENTS

The constituents found in the ethyl chloride fractionation column wastes have been implicated in a number of past damage incidents.

There have been three damage incidents caused by one of the substances present in the heavy ends, hexachlorobenzene[3]:

(1) In Louisiana, hexachlorbenzene (HCB), a toxic industrial by-product, was dumped in a rural landfill where it sublimated. Cattle absorbed HCB in their tissues and 20,000 animals were quarantined by the State Department of Agriculture (Lazar, 1975). This incident illustrates the ability of HCB to bioaccumulate.

(2) In Southern Louisiana, industrial wastes containing hexachlorobenzene (HCB), a relatively volatile material, were transported over a period of time to municipal landfills in uncovered trucks. High levels of HCB have since been reported in the blood plasma of individuals along the route of transport. In a sampling of 29 households along the truck route, the average plasma level of HCB was 3.6 ppb with a high of 23 ppb. The average plasmal level of HCB in a control group was 0.5 ppb with a high of 1.8 ppb (Farmer et al., 1976). This incident illustrates the ability of HCB to get into the blood stream from inhalation.

(3) Hexachlorobenzene wastes were disposed in landfill sites in southern Louisiana. Some of the waste was covered following disposal, and some was not. Soil and plant samples taken near the landfill area showed a decreasing HCB content as distance from the landfill increased. The HCB levels in the plasma of landfill workers was reported to range from 2 to 345 ppb; the average level in a control group was 0.5 ppb with a high of 1.8 ppb. A study of the land disposal of the hexachlorobenzene wastes indicated that uncovered wastes released 317 kilograms per hectare per year (kg/ha/yr). This incident further illustrates the ability of HCB to present a hazard due to improper landfil management and inhalation.

There have also been three damage incidents resulting from the mismanagement of trichloroethylene, another waste constituent.

(1) In one incident in Michigan, an automotive parts manufacturing plant routinely dumped spent degreasing solutions on the open ground at a rate of about 1000 gallons per year from 1968 to 1972. Trichloroethylene was one of the degreasing solvents present in the spent solutions. Beginning in 1973, trichloroethylene in nearby residential wells was detected at levels up to 20 mg/l. The dump site was the only apparent source of possible contamination [6]. This illustrates the migratory potential and persistence of improperly disposed trichloroethylene.

(2) In a second incident, also in Michigan, an underground storage tank leaked trichloroethylene which was detected in local groundwater up to four miles away from the land[7]. This also illustrates the migratory potential of trichloroethylene.

(3) In April of 1974, a private water well in Bay City Michigan became contaminated by trichloroethylene. The only nearby source of this

chemical was the Thomas Company (which replaced the well with a new one). The company claimed that, although it had discharged trichloroethylene into the ground in the past, it had not done so since 1968. Nevertheless, in May, 1975, two more wells were reported to be contaminated with trichloroethylene at concentrations of 20 mg/l and 3 mg/l, respectively [8]. This further illustrates the migratory potential and persistence of this compound.

C. Health and Ecological Effects Associated With The Constituents

1. 1,2-Dichloroethane

Health Effects - 1,2-Dichloroethane is a carcinogen.[9] In addition, this compound and several of its metabolites are highly mutagenic [10, 11]. 1,2-Dichloroethane crosses the placental barrier and is embryotoxic and teratogenic [12 - 16], and has been shown to concentrate in the milk of nursing mothers.[17] Exposure to this compound can cause a variety of adverse health effects including damage of the liver, kidneys and other organs, internal hemorrhaging and blood clots [18]. 1,2-Dichloroethane is a designated priority pollutant under Section 307(a) of the CWA. Additional information and specific references on adverse health effects of 1,2-dichloroethane can be found in Appendix A.

Ecological Effects - Values for a 96-hour static LC_{50} for bluegills ranged from 236 to 300 mg/l making it moderately toxic.[19]

Regulations - OSHA has set the TWA at 50 ppm. DOT requires the containers for this chemical to carry a warning that it is a flammable liquid.

The Office of Air, Radiation and Noise has completed pre-regulatory assessment of 1,2-dichloroethane under Sections 111 and 112 of the Clean Air Act. Pre-regulatory assessments are also being conducted

by EPA's Office of Water and Waste Management under the Safe Drinking Water Act and by the Office of Toxic Substances under the Toxic Substances Control Act.

Industrial Recognition of Hazard - Sax, in Dangerous Properties of Industrial Materials, rates 1,2-dichloroethane as highly toxic upon ingestion and inhalation.

2. Trichloroethylene

Priority Pollutant - Trichloroethylene is listed as a priority pollutant in accordance with §307(a) of the Clean Water Act of 1977.[20]

Health Effects - Trichloroethylene is identified as a carcinogen.[39] Trichloroethylene has been shown, both through acute and chronic exposure, to produce disturbances of the central nervous system and other neurological effects[22,23,24]. Trichloroethylene has been found to cause heptacellcer cancinoma in mice.

3. Hexachlorobenzene (HCB)

Priority Pollutant - HCB is listed as a priority pollutant under Section 307(a) of the Clean Water Act.

Health Effects - Hexachlorobenzene (HCB) has produced cancers in animal species[25,26] and has been recognized by the Agency to be carcinogenic.[39] Other animal studies have shown that HCB crosses the placental barrier to produce toxic effects and was lethal to fetuses.[27] Hexachlorobenzene is stored for long periods in body fat. Chronic exposure to HCB has been shown to result in damage to the liver and spleen.[28] It has also been demonstrated that at doses far below those which are lethal, HCB enhances the body's capability to toxify, rather than detoxify, other

foreign organic compounds present in the body through its metabolism.[29]

The recommended ambient criterion[31] level for HCB in wastes is 1.25 nanograms per liter. Actual measurements, on the other hand, of finished drinking water in certain geographic areas have been measured at levels up to six times the recommended criterion designed to protect human health, demonstrating the mobility and persistence of the material.[38]

Ecological Effects - Hexachlorobenzene is very persistent.[32] It has been reported to move through the soil into the groundwater.[21] Movement of hexachlorobenzene within surface water systems is projected to be widespread.[30] Movement to this degree will likely result in exposure to aquatic life forms in rivers, ponds, and reservoirs. Similarly, potential exposure to humans is likely where water supplies are drawn from surface waters.

Hexachlorobenzene is likely to contaminate accumulated bottom sediments within surface water systems and bioaccumule in fish and other aquatic organisms.[30]

Regulatory Regulation of Hazard - Ocean dumping of hexachlorobenzene is prohibited. An interim food contamination tolerance of 0.5 ppm has been established by FDA.

Additional information on the adverse effects of hexachlorobenzene can be found in Appendix A.

4. Hexaclorobutadiene(HCBD)

Priority Pollutant - Hexachlorobutadiene is considered a priority pollutant under Section 307(a) of the CWA.

Routes of Exposure - oral-very toxic

Health Effects - Hexachlorobutadiene (HCBD) has been found to be carcinogenic in animals.[23,39] Upon chronic exposure of animals

by the DOW Chemical Company and others, the kidney appears to be the organ most sensititve to HCBD.[34,35,36,37]

The proposed human health criterion level for this compound in water is .77 ppb.

Ecological Effects - Movement of HCBD within surface water systems is projected to be widespread.[30]

HCBD is likely to contaminate accumulated bottom sediments within surface water systems and is likely to bioaccumulate in fish and other aquatic organisms.[30]

The USEPA (1979) has estimated that the BCF is 870 for the edible portion of fish and shellfish consumed by Americans.

Hexachlorobutadiene is persistent in the environment.[32] It has been reported to move through soil into groundwater.

Industrial Recognition of Hazard - Hexchlorobutadiene is considered to have a high toxic hazard rating via both oral and inhalation routes (Sax, Dangerous Properities of Industrial Material).

Additional information on the adverse effects of hexachlorabutadiene can be found in Appendix A.

REFERENCES

1. 1979 Directory of Chemical Producers, Stanford Research Insititute.

2. Assessment of Industrial Hazardous Waste Practices: Organic Chemicals Pesticides and Explosive Industries," TWR report to U.S. Environmental Protection Agency.

3. OSW - Hazardous Waste Management Division, "Hazardous Waste Incidents": Incidents": Unpublished Open File Data, 1978

4. Dawson, English, Petty, 1980, "Physical Chemical Properties of Hazardous Waste Constitutents".

5. Patty, Franle A., Editor, Industrial Hyginene and Toxicology. Volume II. Interscience Publishers, New York, 1963.

6. Michigan Department of National Resources - Geological Survey Divison. Case History #48.

7. Schellenbarger, P. 1979, "new Charge Hits Air Force." The Detroit News, May 17, 1979.

8. Mitre Corporation, 1979. Draft Report in Support of Subsection C. Prepared for U.S. Environmental Protection Agency.

9. National Cancer Institute. Bioassay of 1,2-Dichloroethane for Possible Carcinogenicity. U.S. Department of Health, Education and Welfare, Public Health Service, National Institutes of Health, National Cancer Institute, Carcinogenesis Testing Program, DHEW Publication No. (NIH) 78-1305, January 10, 1978.

10. McCann, J., E. Choi, E. Yamasaki, and B. Ames. Detection of Carcinogens a Mutagenic in the Salmonella/Microsome Test: Assay of 300 Chemicals. Proc. Nat. Acad. Sci. USA 72(2):5135-5139, 1975a.

11. McCann, J., V. Simmon, D. Streitwieser, and B. Ames. Mutagenicity of Chlorocetaldehyde, a Possible Metabolic Product of 1,2-Dichloroethane (ethylene dichloride), Chloroethanol (ethylene cholorhydrin), Vinyl chloride, and cyclophosphamide. Proc. Nat. Acad. Sci. 72 (8)"3190-3193.

12. Vozovaya, M., Changes in the Esterous Cycle of White Rats Chronically Exposed to the Combined Action of Gasoline and Dichloroethane Vapors . Akush. Genecol. (kiev) 47 (12): 65-66, 1971.

13. Vozovaya, M., Development of Offspring of two Generations Obtained from Females Sujected to the Action of Dichloroethane. Gig. Sanit. 7:25-28, 1974

14. Vozovaya, M., The Effect of Low Concentrations of Gasoline, chloroethane and Their Combination on the Generative Function of Animals and on the Development of Progeny. Gig. Tr. Prof. Zabo. 7:20-23, 1975.

15. Vozoakya, M., Effect of Low Concentrations of Gasoline, Dichloroethane and Their Combination on the Reproduction Function of Animals. Gig. Sanit. 6:100-102, 1976.

16. Vozovaya, M.A., The Effect of Dichloroethane on the Sexual Cycle and Embryogenesis of Experimental Animals. Akush. Genecol. (Moscow) 2:57-59 , 1977.

17. Urusova, T.P (About a possibilitly of dichloroethane absorption into milk of nursing women when contacted under industrial conditions.)

18. Parker, J.C., et al. 1979. Chloroethanes: A Review of Toxicity. Amer. Indus. Hyg. Assoc. J., 40: A 46-60, March 1979.

19. U.S. EPA, 1979. Chlorinated Ethanes: Abmbient Water Quality Criteria (Draft).

20. U.S. EPA States Regulation Files; January 1980.

21. Mansville Chemical Products. 1976. Chemical Products Synopsis - Trichloroethylene.

22. Nomiyama, K. and H. Nomiyama. 1971. Metabolism of Trichloroethylene in Human Sex Differences in Urinary Excretion of Trichloroacetic Acid and Trichloroethanol. Int, Arch. Arbeitsmed. 28:37.

23. Bardodej, A., and J. Vyskocil. 1956. The Problem of Trichloroethylene in Occupational Medicine. AMA Arch. Ind. Health. 13:581.

24. McBirn'ey, B.S., 1954. Trichloroethylene and Dichloroethylene Poisoning. AMA. Ind. Hyg. 10:130.

25. Cabral, J. R. P. et al. Carcinogenic Activity of Hexachlorobenzene in Hamster. Tox. Appl. Pharmacol. 41:155 (1977).

26. Cabral, J. R. P., et al. 1978. Carcinogensis Study in Mice with Hexachlorobenzene. Tox. Appl. Paramacol. 45:323.

27. Grant, D. L. et al. 1977. Effect of Hexachlorobenzene on Reproduction in the Rat. Arch, Environ. Contam. Toxic. 5:207.

28. Koss, G. et al. 1978. Studies on the Toxicology of Hexachlorobenzene. III. Observation in a long-term experiment Arch. Toxicol. 40:285.

29. Carison, G. P., 1978. Induction of Cytochrome P-450 by Haulogenated Benzenes. Brochem. Pharmacol. 27:361.

30. Technical Support Document for Aquatic Fate and Transport Estimates for Hazardous Chemical Exposure Assessments. Estimates for Hazardous Chemical Exposure Assessments. 1980. USEPA, Environmental Research Lab., Athens, Georgia.

31. U.S. EPA. Chlorinated Benzenes: Ambient Water Quality Criteria, 1979.

32. U.S. EPA. 1979. Water-Related Environmental Fate of 129 Priority Pollutants. EPA-440/4-79-029b.

33. Kociba, R. J., Results of a Two-year Chronic Toxicity Study with Hexachlorobutadiene in Rats. Amer. Ind. Hyg. Assoc. 38:589, 1977.

34. Kociba et. al. Toxicologic Study of Female Rats Administered Hexachlorabutadiene or Hexachlorobenzene for 30 Days. DOW Chemical Company, 1971.

35. Schwetz, et al., Results of a Reproduction Study in Rats Fed Diets Containing Hexachlorobutadiene. Toxicol. Appl. Pharmacol. 42:387, 1977.

36. Schroit, et. al., Kidney Lesions Under Experimental Hexachlorobutadiene Poisoning. Aktual, Vpo. Gig. Epidemiol. 73. CA:81:73128F (translation), 1972.

37. "Emission Control Optional for the Synthesis Organic Chemicals Manufacturing Industry: Carbon Tetrachloride and Perchloroethylene," EPA, Office of Air Quality Planning and Standards. Contract Number 68-02-2257.

38. U.S. EPA. 1975. "Preliminary Assessment of Suspected Carcinogens in Drinking Water", Report to Congress. EPA 560/4-75-003, Environmental Protection Agency, Washington, D.C.

39. CAG List of Carcinogens, April 22, 1980

LISTING BACKGROUND DOCUMENT

ETHYLENE DICHLORIDE AND VINYL CHLORIDE MONOMER PRODUCTION

Heavy ends from the distillation of ethylene dichloride in ethylene dichloride production. (T)

Heavy ends from the distillation of vinyl chloride in vinyl chloride monomer production. (T)

I. Summary of Basis for Listing

The heavy ends from the distillation of ethylene dichloride in ethylene dichloride (EDC) production, and the distillation of vinyl chloride in production of vinyl chloride monomer (VCM) contain toxic chemicals and chemicals that are carcinogenic, mutagenic, or teratogenic. The waste constituents of concern are ethylene dichloride, trichloroethanes (1,1,1/1,1,2), tetrachloroethanes (1,1,2,2/1,1,1,2), vinyl chloride, vinylidene chloride, chloroform, and carbon tetrachloride.

The Administrator has determined that the heavy ends generated during the purification (distillation) of crude EDC and VCM is a solid waste stream which may pose a substantial present or potential hazard to human health or the environment when improperly transported, treated, stored, disposed of, or otherwise managed, and therefore should be subject to appropriate management requirements under Subtitle C of RCRA. This conclusion is based on the following considerations:

1. Of the compounds present in the ethylene dichloride and vinyl chloride monomer wastes, many are known or suspected carcinogens, and several are mutagenic and/or teratogenic.

2. Disposal of these wastes is accomplished partially by use of landfills, which, if improperly designed or operated, could result in leaching of hazardous substances into ground or surface water and subsequent risk of human exposure to the dangerous components of the waste.

3. Hydrocarbons, such as those predominating in this waste, are highly mobile and persistent in the soil profile and saturated subsurface, and have been responsible for many reported cases of ground water pollution. Enhancing this potential for ground and surface water pollution is the fact that most of this waste is produced and disposed of in Gulf coastal areas where water tables and rainfall are generally high.

4. The total combined waste generation for the balanced EDC/VCM process is estimated to be 170-370 million lb./yr. Such a large volume of waste containing dangerous constituents justifies imposition of strict controls.

II. Source of the Wastes and Typical Disposal Practices

A. Profile of the Industry (1,2)

Ethylene dichloride (EDC) and vinyl chloride monomer (VCM) are produced at 20 plants within the United States. Table 1 presents a list of EDC and VCM producers. EDC is produced by both the direct chlorination of ethylene and the oxychlorination of ethylene. VCM is produced by the thermal cracking (dehydrochlorination) of EDC. The waste streams listed in this document thus arise in many cases out of a common production process. Figure 1 presents a summary of the chemical reactions involved in producing EDC and VCM.

Production in 1978 was 6.346 million metric tons for EDC and 3.776 million metric tons for VCM (Table 1).

TABLE 1. PRODUCERS AND 1978 PRODUCTION CAPACITIES OF ETHYLENE DICHLORIDE AND VINYL CHLORIDE MONOMER (metric tons/yr) (1, 2)

Company	Plant location	Ethylene dichloride	Vinyl chloride monomer
Allied	Baton Rouge, Louisiana	272,000	136,000
Borden	Geismer, Louisiana	-	136,000
Conoco	Lake Charles, Louisiana	544,000	318,000
Diamond Shamrock	Deer Park, Texas	145,000	-
	LaPorte, Texas	-	454,000
Dow	Freeport, Texas	726,000	91,000
	Oyster Creek, Texas	499,000	318,000
	Plaquemine, Louisiana	590,000	363,000
Ethyl	Baton Rouge, Louisiana	318,000	136,000
	Pasadena, Texas	113,000	-
Goodrich	Calvert City, Kentucky	454,000	454,000
PPG	Lake Charles, Louisiana	585,000	181,000
	Guayanilla, Puerto Rico	485,000	277,000
Monochem	Geismar, Louisiana	-	136,000
Shell	Deer Park, Texas	635,000	381,000
	Norco, Louisiana	544,000	318,000
Stauffer	Long Beach, California	141,000	77,000
Union Carbide	Taft, Louisiana	68,000	-
	Texas City, Texas	68,000	-
Vulcan	Geismar, Louisiana	159,000	-
	TOTALS	6,346,000	3,776,000

ETHYLENE DICHLORIDE VIA DIRECT CHLORINATION OF ETHYLENE

$$CH_2{=}CH_2 + Cl_2 \rightarrow CH_2ClCH_2Cl \qquad (1)$$

ETHYLENE DICHLORIDE VIA OXYCHLORINATION OF ETHYLENE

$$CH_2{=}CH_2 + 1/2O_2 + 2HCl \rightarrow CH_2ClCH_2Cl + H_2O \qquad (2)$$

VINYL CHLORIDE MONOMER VIA THERMAL CRACKING OF ETHYLENE DICHLORIDE

$$CH_2ClCH_2Cl \rightarrow CH_2{=}CHCl + HCl \qquad (3)$$

ETHYLENE DICHLORIDE AND VINYL CHLORIDE MONOMER
VIA THE BALANCED PROCESS

$$2CH_2{=}CH_2 + 2Cl_2 \rightarrow 2CH_2ClCH_2Cl \qquad (4)$$

$$4CH_2ClCH_2Cl \rightarrow 4CH_2{=}CHCl + 4HCl \qquad (5)$$

$$2CH_2{=}CH_2 + O_2 + 4HCl \rightarrow 2CH_2ClCH_2Cl + 2H_2O \qquad (6)$$

Figure 1. Alternative methods of producing ethylene dichloride and vinyl chloride monomer.

B. Manufacturing Process, Waste Composition and Waste Management (1, 65, 66)

As noted above, ethylene dichloride (EDC) is produced by two processes: the direct chlorination of ethylene and the oxychlorination of ethylene. Vinyl chloride monomer (VCM) is produced by the thermal cracking of EDC yielding hydrogen chloride (HCL) as a by-product. In the "balanced process", ethylene is converted to EDC in two equally sized production units utilizing direct chlorination and oxychlorination of ethylene. The HCL by-product produced by the thermal cracking of EDC to form VCM and by direct ethylene chlorination is used as feed for the oxychlorination unit. The flow diagram for the balanced process is given in Figure 2. For those VCM plants that purchase EDC, the by-product HCL is recovered and sold or used in other hydrochlorination processes.

1. EDC Production by Direct Chlorination of Ethylene

The chemical reaction for the direct chlorination of ethylene to produce ethylene dichloride is equation (1) in Figure 1. Ethylene is chlorinated catalytically in a vapor- or liquid-phase reaction, in the presence of ethylene dibromide to prevent polychlorination, at temperatures ranging between 50°C and 150°C and at 10 to 20 psig pressure. The catalysts used are metallic chlorides; e.g., ferric, aluminum, copper, or antimony. Commercially, ferric chloride is employed as a catalyst in the liquid-phase system. Yields are reported at approximately 90% based on ethylene.(3)

Chlorine is mixed with ethylene and fed to a reactor where the reaction takes place in the liquid phase with an excess of EDC. The reaction is exothermic (217.6 MJ/mole or 52 kcal/mole), and heat is removed by jacketed walls, internal cooling coils, or external heat

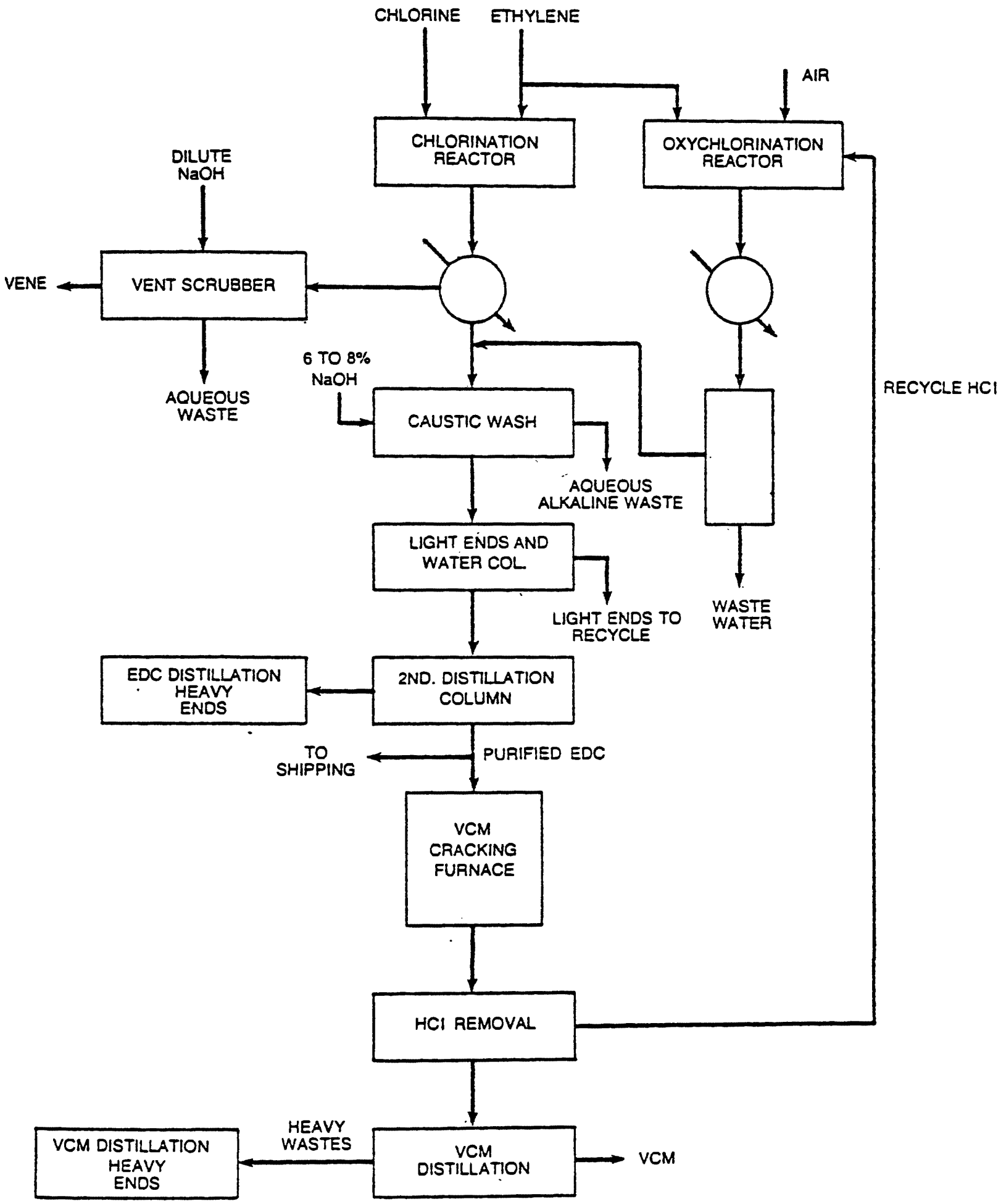

Figure 2. PRODUCTION OF EDC & VCM

Modified from references 1, 65, 66

exchange. A liquid and a vapor stream are obtained from the reactor.

The overhead vapor effluent from the reactor is condensed in a water-cooled or refrigerated heat exchanger to condense any ethylene dichloride present in the vapor stream. Noncondensables are sent through a scrubber fed with diluted sodium hydroxide to remove small amounts of hydrogen chloride and chlorine gas before venting to the atmosphere.

Liquid effluent from the reactor, consisting mainly of crude ethylene dichloride, is cooled, then washed with a 6% to 8% caustic solution. Water is removed either by coalescing and phase separation, or by phase separation and light ends distillation. Ethylene dichloride is obtained as overhead in a heavy ends distillation column. Based on common practice in the chlorinated hydrocarbon industry, these distillation bottoms, consisting of heavy ends, are sent to disposal; this is the first waste stream of concern in this document.

A list of the pollutants found in the distillation column heavy ends in the direct chlorination process are presented in Table 2, along with their amounts.

Table 2. HEAVY ENDS FROM DIRECT CHLORINATION [1]

Ethylene dichloride - 3.3 lb/ton of ethylene dichloride 1,1,2 Trichloroethane - 5.39 lb/ton of ethylene dichloride Tetrachloroethane - 5.39 lb/ton of ethylend dichloride Tars - trace

2. EDC Production by Oxychlorination of Ethylene

The chemical reaction for the oxychlorination of ethylene to produce ethylene dichloride follows is presented as equation (2) in Figure 1.

Air and hydrogen chloride react with ethylene in a fluidized- or fixed-bed catalytic process to produce ethylene dichloride. The catalyst used is a mixture of copper chloride and other chlorides. Reactor temperature varies between 180°C and 280°C, and pressure ranges from 340 to 680 kPa gauge (50 to 100 psig). Yields are over 90% based on ethylene, depending on the presence of excess ethylene or hydrogen chloride. Excess hydrogen chloride favors the reaction.

Stoichiometric amounts of ethylene, anhydrous hydrogen chloride, and air are fed to a catalytic reactor. The air is compressed and preheated prior to entering the reactor as a means of initiating the reaction. Conversion of ethylene is virtually complete in one pass through the reactor. The reaction is highly exothermic, and heat is recovered as steam, with internal cooling, using coils or fixed-bed multitube reactors which resemble a heat exchanger, with the catalyst contained inside the tubes, while coolant flows through the shell.(3)

Effluent from the reactor is cooled by either direct water quench or indirect heat exchange. Condensed effluent is sent to a phase separator. Noncondensable gases consisting mainly of nitrogen are contacted in an absorber with either water or aromatic solvent for removal of HCl and recovery of ethylene dichloride before venting to the atmosphere. The organic liquid product obtained in the phase separator joins the stream of the product from direct chlorination and is contacted with aqueous

caustic soda to neutralize any remaining hydrogen chloride.

Effluent from the neutralizer is distilled for removal of light ends consisting of water and light chlorinated hydrocarbon impurities. The light ends are recovered as overhead and sent to waste disposal.* Bottoms from the distillation column, which consist mainly (96% to 98%) of ethylene dichloride, are sent to the final products purification or distillation column. Pure ethylene dichloride is obtained as overhead and sent to storage. The heavy ends from the EDC purification (or distillation) column are the waste stream at issue here. Table 3 indicates pollutants contained in the EDC heavy ends from the oxychlorination process.

Table 3. HEAVY ENDS FROM OXYCHLORINATION [2]

Ethylene dichloride - 4.6 lb/ton of ethylene dichloride
Trichloroethane - 4.6 lb/ton of ethylene dichloride
Heavy chlorinated compounds - 5.8 lb/ton of ethylene dichloride

Disposal of these wastes is expected to be by incineration or landfilling, based on common practice in the chlorinated hydrocarbon industry.

3. VCM Production

Vinyl chloride is produced from purified EDC. The purified EDC is thermally cracked to yield crude VCM and hydrochloric acid (HCl). The HCl is recovered and used as feed to the oxychlorination reactor.

*/ This waste stream is not presently listed as hazardous.

Crude VCM is distilled to yield pure VCM. Heavy ends from VCM distillation are disposed of as waste or are recycled for additional thermal cracking and/or further chlorination to form other chlorinated organic products.

It should be noted that the balanced process generates both EDC heavy ends and VCM heavy ends. In an integrated plant some heavy ends from the VCM plant are cycled to the ethylene dichloride still. In a non-integrated plant, they are stripped of the ethylene dichloride, which is to be recycled to the VCM unit. In either case, the ultimate residue is expected to be disposed of by incineration or landfill, based on common practice in this industry (i.e., the chlorinated hydrocarbon industry).

The bottoms from the ethylene dichloride plant are partially cycled to a downstream chlorination unit where the residual heavy ends are partially retained and partially sent to disposal. Based on common industry practice, disposal is expected to be by incineration or landfill.

The heavy ends waste discharge (for both EDC heavy ends and VCM heavy ends) for a plant producing ethylene dichloride and vinyl chloride monomer by the balanced process is estimated to consist principally of the components listed in Table 4 below:

Table 4 Estimated Heavy Ends Waste Discharge for EDC and VCM Production by the Balanced Process

Ethylene Dichloride	3-5 lb/ton of EDC
Trichloroethane	4-5 lb/ton of EDC
Tetrachloroethane	2-5 lb/ton of EDC
Heavy Chlorinated Compounds (Tars)	3-6 lb/ton of EDC

This estimate assumes that the major constituents of EDC heavy ends and VCM heavy ends will be the same - a reasonable supposition since not all the carbon bonds in the EDC feedstock will be cracked by dehydrochlorination, so that these waste constituents will remain to be separated as heavy ends in the VCM distillation step.

The quantities shown in Table 4 are averages derived from the heavy end composition data shown in Tables 2 and 3. Relative concentrations of major waste constituents may be determined from the amounts of constituents shown in Tables 2-4.

In addition to the major components listed in Table 4, the combined ethylene dichloride - vinyl chloride monomer heavy ends waste discharge also is expected to contain lesser quantities of the following compounds:

Vinyl Chloride

Vinylidene Chloride

Trichloroethylene

Tetrachloroethylene

Chloroform

Carbon Tetrachloride

The postulated reaction pathways for these constituents (briefly stated) are as follows. Vinyl chloride is likely to be present since it is the product and would not be removed completely in the distillation step. Vinylidene chloride would result from the dehydrochlorination of trichloroethylene (a major constituent of EDC heavy ends) trichloroethylene would result from the dehydrochlorination of tetrachloroethane (another major

constituent of EDC heavy ends). Trichloroethylene could in turn be chlorinated to form tetrachloroethylene. Chloroform could result from the dehydrochlorination of feedstock EDC, and could in turn be chlorinated to form carbon tetrachloride.

III. Discussion of Basis for Listing

A. Hazards Posed by the Waste

1. Quantities of Wastes Generated

Based on annual production capacities of approximately 14 billion pounds (6.35 million metric tons) for ethylene dichloride intermediate and 8.3 billion pounds (3.78 metric tons) for vinyl chloride monomer end product, as much as 30 million pounds of ethylene dichloride and 30 million pounds each of trichloroethane and tetrachloroethane may be present in the heavy ends waste generated from the production of these substances each year. Very large quantities of other waste constituents will also be generated. Thus, extremely large quantities of waste constituents are available for environmental release. Additionally, ethylene dichloride, 1,1,2-trichloroethane, and 1,1,2,2-tetrachloroethane--also present in high concentrations--are known carcinogens, while 1,1,1-trichloroethane and 1,1,1,2-tetrachloroethane, also present in high concentrations, are suspected carcinogens. In addition, the waste also contains lesser quantities or vinyl chloride, vinylidene chloride, tetrachloroethylene, trichloroethylene, and chloroform, all of which are known carcinogens. A number of the compounds found in this waste also exhibit mutagenic or tetraogenic effects, including 1,1,1,-trichloroethane, 1,1,2-trichloroethane, and the tetrachloroethanes. Should release occur, large-scale contamination of the environment is likely. Moreover, contamination will be prolonged,

since large amounts of the pollutants are available for environmental loading Attenuative capacity of individual disposal sites also could be exhausted due to the large quantities of pollutants available. These considerations themselves justify hazardous waste listing status.

Further, as shown below, the waste constituents are capable of migration, mobility, and persistence if improperly managed. Indeed, numerous damage incidents involving these waste constituents have actually occurred.

2. Exposure Pathways of Concern

Based on common industry practice, current methods for disposal of this waste are by incineration or landfilling. Improper management of either method can result in substantial hazard. Improper incineration could result in serious air pollution through release of toxic fumes. This may occur when incineration facilities are operated in such a way that combustion is incomplete (i.e., inadequate conditions of temperature mixing and residence time) resulting in airborne dispersion of hazardous vapors containing partially combusted organics, newly formed organic compounds, and hydrogen chloride. Phosgene is an example of a partially chlorinated organic which is produced by the decomposition or combustion of chlorinated organics by heat.[61, 62] Phosgene has been used as a chemical warfare agent, and is extremely toxic. Improper incineration thus could present a significant opportunity for exposure of humans, wildlife and vegetation in the vicinity of these operations to risk through direct contact.

Improper disposal in landfills can also lead to substantial environmental hazard. Migration to and subsequent contamination of ground

and surface waters is a particular danger. All of the waste constituents of concern tend to be highly soluble in water (with the exception of vinyl chloride, which is a gas), with solubilities ranging from 800 mg/l (carbon tetrachloride) to 8700 mg/l (ethylene dichloride (Appendix B). Thus, these waste constituents will tend to migrate in high concentrations under even relatively mild environmental conditions. Improperly sited landfills (for example, in areas with highly permeable soils, or in areas where soil is low in attenuative capacity) or improperly managed (for instance, landfills with inadequate leachate collection or minotoring systems) could easily prove inadequate to prevent waste migration.

Once these waste constituents migrate from the waste, they are likely to persist in groundwater for long periods of time (App. B). Thus, improperly designed landfills could well lead to human and environmental exposure, and attendant substantial hazard in light of the hazardous nature of the waste constituents.

An air inhalation pathway is an additional exposure route of concern. Of the waste constituents, ethylene dichloride, the trichloroethanes, the tetrachloroethanes, chloroform, and carbon tetrachloride all tend to be relatively to highly volatile, with vapor pressures ranging from 5mm Hg. (tetrachloroethanes) to 116 mm Hg. (chloroform) (App. B.). Vinyl chloride is already a gas, so it also poses a substantial air pollution hazard. Inadequate site cover could therefore lead to escape of volatile waste constituents and resulting contamination of air in the vicinity surrounding the site.

There is, therefore, a strong potential that landfilling of these wastes will ultimately result in pollution of nearby groundwater

by ethylene dichloride, the trichloroethanes, the tetrachloroethanes, and other similar waste components. This is enhanced by the fact that most of this waste is produced and, presumably, disposed of in Gulf coast areas (see Table 1) where water tables are generally shallow and rainfall is relatively high.

There is also the possibility that components of this waste could enter surface waters, either by mishandling of the waste prior to disposal or by migration of individual compounds through groundwater to points of discharge to surface waters.

In surface waters, the chlorinated ethanes and ethylenes will tend to volatize due to their high vapor pressures. However, traces will probably remain for extended periods of time. Chloroform, one of the waste components, in fact, has been shown to persist almost indefinitely in surface water. (App. B)

3. Actual Damage Incidents

Actual damage incidents confirm these waste constituents' ability to migrate and persist and cause substantial hazard if improperly managed. The chlorinated ethanes and ethylenes-such as those which predominate in this waste-are the classes of organic pollutants being identified far more often than any other pollutant types in current groundwater pollution incidents. For example, ethylene dichloride, (1,2-dichloroethane) has been found in groundwater from public water supply wells at Bedford, Massachusetts, where the source is believed to be industrial operations upstream.(4)

At the Llangollen landfill in Delaware, dichloroethane (ethylene

dichloride and/or 1,1-dichloroethane) has been found migrating from the landfill through nearby ground water.(5) In New Jersey, seepage from landfilled wastes near the CPS chemical company resulted in contamination of nearby ground water by trichloroethane and tetrachloroethane.(6) 1,1,1-Trichloroethane was detected in ground water at Acton, Massachusetts, where the source is believed to be a settling lagoon at a nearby manufacturing plant.(4) Extensive contamination of ground water by trichloroethylene has also been reported in southeast Pennsylvania.(7) Trichloroethylene has also been found in school and basement air, and in residential basements in Love Canal.(64)

Field reports such as these clearly indicate that the release of low molecular weight chlorinated hydrocarbons into the soil will result in pollution of groundwater with the potential risk of substantial adverse health effects. This is further substantiated by recent laboratory studies in which 1,1,2-trichloroethane, chloroform, and similar compounds were observed to move through a four foot profile of sandy soil with little retardation relative to water and no apparent degradation.(8) Also, field studies in the Netherlands and California have shown that low molecular weight chlorinated hydrocarbons, such as those occurring in this waste, are highly mobile and persistent in the saturated ground water environment.(9, 10)

In light of the highly dangerous character of the constituents of concern in the waste, some of which are likely to be present in high concentrations, the Agency would require strong assurance that these constituents will not migrate and persist if improperly landfilled or incinerated. Data in fact indicate that these constituents may well migrate and persist via a number of exposure pathways. Thus, these

wastes clearly should be listed as hazardous.

B. Health and Ecological Effects

1. Ethylene Dichloride

Health Effects - Ethylene dichloride (1,2-dichloroethane) has been shown to cause cancer in laboratory animals.(11) Ethylene dichloride is extremely toxic (oral rat LD_{50} = 12 mg/Kg). In addition, this compound and several of its metabolites are highly mutagenic.(12) 1,2-Dichloroethane crosses the placental barrier and is embryotoxic and teratogenic.(13-17) It has also been shown to concentrate in milk.(18) Exposure to this compound can cause a variety of adverse health effects including damage to the liver, kidneys and other organs. It can also cause internal hemorrhaging and blood clots.(19) Ethylene dichloride (1,2-dichloroethane) is designated as a priority pollutant under section 307(a) of the CWA. Additional information and specific references on adverse effects of ethylene dichloride can be found in Appendix A.

Ecological Effects - Values for a 96 hour static LC_{50} for bluegills range from 256 to 300 mg/l making it moderately toxic.(20)

Regulatory Recognition of Hazard - OSHA has set the TWA at 50 ppm. DOT requires the containers for this chemical to carry a warning that it is a flammable liquid. The Office of Air Pollution and Noise has completed the preregulatory assessment of 1,2-dichloroethane under sections 111 and 112 of the Clear Air Act. Preregulatory assessments are also being conducted by EPA's Office of Water and Waste Management under the Safe Drinking Water Act and by the Office of Toxic Substances under the Toxic Substances Control Act. Ethylene dichloride is currently being studied by the Consumer Product Safety Commission under the Consumer Product Safety Act.

Industrial Recognition of Hazard - Sax in Dangerous Properties of Industrial Materials rates 1,2-dichloroethane as highly toxic upon ingestion and inhalation.

2. 1,1,1-Trichloroethane (Methylchloroform)

Health Effects - 1,1,1-Trichloroethane is a suspected carcinogen and when tested for carcinogencity by NCI was found to induce a variety of malignant tumors in two species of rodents. (21) Experiments involving rat embryo cell cultures indicated that 1,1,1-trichloroethane transforms cells *in vitro*. Transplantation of these premalignant transformed cells into an intact animal produced cancers in all of the animals injected.(22)

1,1,1-Trichloroethane was found to be mutagenic in the *Ames Salmonella* essay (23) and was shown to cause fetal development abnormalities.(24)

Acute and chronic intoxication of humans have caused severe central nervous system impairment, such as lengthened reaction and perception time, decreased manual dexterity, equilibrium disturbance (3). Animal studies have shown that methylchloroform causes organ damage to heart, lungs, liver and kidneys.(25) 1,1,1-Trichloroethane is designated as a priority pollutant under section 307(a) of CWA. Additional information and specific references on the adverse effects of 1,1,-trichloroethane can be found in Appendix A.

Ecological Effects - 1,1,1-Trichloroethane is very toxic to aquatic life. Lethal concentrations (96 hour) of 37-38 mg/l were registered for bluegills, 52 mg/l for fathead minnows and 26 mg/l for shrimp.(26) The BCF factor is set by USEPA at 21.(20)

Regulations - OSHA has set the TWA at 350 ppm.

Industrial Recognition of Hazard - Sax Dangerous Properties of Industrial Matrials lists 1,1,1-trichloroethane as carcinogenic and moderately toxic.

3. 1,1,2-Trichloroethane

Health Effects - 1,1,2-Trichloroethane has also been shown to cause cancer in mice.(27) It has also been identified by the Agency as a compound exhibiting substantial evidence of carcinogenicity.(67) There is evidence that 1,1,2-trichloroethane is mutagenic and may be embryo toxic or cause teratogenic effects.(13-17,28-30) 1,1,2-Trichloroethane is considered toxic [oral rat LD_{50} = 1140 mg/Kg].

Like the other compounds of this type, the trichloroethanes are narcotics, produce central nervous system effects, and can damage the liver, kidney and other organs.(19) 1,1,2-Trichloroethane is designated as a priority pollutant under Section 307(a) of the CWA. Additional information and specific references on the adverse effects of 1,1,2-trichloroethane can be found in Appendix A.

Ecological Effects - Aquatic toxicity data are limited with only three acute studies in freshwater fish and invertebrates with doses ranging from 10,700 to 22,000 mg/l.(20)

Regulations - OSHA has set the TWA at 10 ppm (skin).

Industrial Recognition of Hazard - Sax, Dangerous Properties of Industrial Materials, lists 1,1,2-trichloroethane as being moderately toxic by inhalation, ingestion and skin absorption.

4. Tetrachloroethanes

Health Effects - 1,1,2,2-Tetrachloroethane has been shown to produce liver cancer in laboratory mice.(31) It has also been identified by the Agency as a compound exhibiting substantial evidence of being carcinogenic. (67) It is also shown to be very toxic [oral rat LD_{50} = 200 mg/Kg]. In addition, passage of 1,1,1,2-tetrachloroethane across the placental barrier has been reported.(29) In Ames Salmonella bioassay 1,1,2,2-tetrachloroethane was shown to be mutagenic.(32) Occupational exposure of workers to 1,1,2,2-tetrachloroethane produced neurological damage, liver and kidney ailments, edema, and fatty degeneration of the heart muscle.(33) Both 1,1,1,2-tetrachloroethane and 1,1,2,2-tetrachloroethane are designated as priority pollutants under Section 307(a) of the CWA. Additional information and specific references on the adverse effects of tetrachloroethanes can be found in Apendix A.

Ecological Effects - Freshwater invertebrates are sensitive to 1,1,2,2-tetrachloroethane with a lethal concentration of 7-8 mg/l being reported.(20) USEPA estimates the BCF to be 18.

Regulations - OSHA has set the TWA at 5 ppm (skin) for 1,1,2,2-tetrachoroethane.

Industrial Recognition of Hazard - Sax, Dangerous Properties of Industrial Materials, lists 1,1,2,2-tetrachloroethane as being highly toxic via ingestion, inhalation and skin absorption.

5. Trichloroethylene

Health Effects - Trichloroethylene has been demonstrated to induce liver cancer in mice.(34) It has also been identified by the Agency as a compound exhbiting substantial evidence of carcinogenicity.(67)

This compound may be absorbed into the body by inhalation, by ingestion, or by absorption through the skin.[34]

An excess of lung, cervical, and skin cancers and a slight excess of leukemias and liver cancers were observed in a study of 330 deceased laundry and dry-cleaning workers who had been exposed to carbon tetrachloride, trichloroethylene, and tetrachloroethylene.[35]

Trichloroethylene is mutagenic in bacteria and yeast and in spot tests for somatic mutations in mice.[36]

Numerous fatalities resulting from anesthesia with trichloroethylene and from industrial intoxications have been reported.[34] Acute and chronic inhalation of trichloroethylene effects the central nervous system. Toxic effects on the liver and other organs can occur from exposure by any route, and there is an indication that the hepatotoxic effect of trichloroethylene is enhanced by concomitant exposure to ethanol or isopropyl alcohol.[34,36] Additional information and sepcific references on the adverse effects of trichloroethylene can be found in Appendix A.

Ecological Effects - Freshwater fish (bluegill) are poisoned by trichloroethylene during a 96 hour exposure to 40-60 mg/l concentration range.[37]

Regulations - OSHA has set a TWA at 100 ppm.

Industrial Recognition of Hazard - Sax, Dangerous Properties of Industrial Materials, lists trichloroethylene as a high systemic toxicant via inhalation and moderate via ingestion.

6. Tetrachloroethylene

Health Effects - Tetrachloroethylene is a carcinogen in laboratory mice.[38] It has also been identified by the Agency as a compound exhibiting substantial evidence of carcinogenicity.[67] The compound can be absorbed into the body via inhalation, by ingestion, and through the skin to increase its toxic effects.[39]

It has also been reported to be mutagenic and to cause transformation of mammalian cells.[39] An excess of lung, cervical and skin cancers and a slight excess of leukemias and liver cancers were observed in a study of 330 deceased laundry and dry-cleaning workers who had been exposed to carbon tetrachloride, trichloroethylene, and tetrachloroethylene.[35]

There is some evidence that tetrachloroethylene may be teratogenic. Repeated exposures to tetrachloroethylene vapors produced a variety of pathological change in the liver ranging from fatty degeneration to neurosis in rats, rabbits and guinea pigs. Exposure to this compound may also effect the kidneys and other organs. It also causes central nervous system effects and gastrointestinal symptoms.[39]

A case of "obstructive jaundice" in a six week old infant has been attributed to tetrachloroethylene in breast milk.[40] Additional information and specific references on the adverse effects of tetrachloroethylene can be found in Appendix A.

7. Vinyl Chloride (VCM)

Health Effects - Vinyl Chloride has been shown to be a carcinogen in laboratory studies.[41,42] It has also been identified by the Agency as a compound exhibiting substantial evidence of carcinogenicity.[67] This finding has subsequently been supported by epidemological

findings.[43,44] Vinyl chloride is very toxic [oral rat LD_{50} = 500 mg/Kg]. Acute exposure to vinyl chloride results in anaesthetic effects as well as uncoordinated muscular activities of the extremeties, cardiac arrythmias[45] and sensitization of the myocardium.[46] In severe poisoning, the lungs are congested and liver and kidney damage occur.[47] A decrease in white blood cells and an increase in red blood cells was also observed and a decrease in blood clotting ability.[48] Vinyl chloride is designated as a priority pollutant under Section 307(a) of the CWA. Additional information and specific references on the adverse effects of vinyl chloride can be found in Appendix A.

Industrial Recognition of Hazard - Sax, Dangerous Properties of Industrial Materials, lists vinyl chloride as having a moderate toxic hazard rating via inhalation.

8. Vinylidene Chloride

Health Effects - Vinylidene chloride has been shown to cause cancer in laboratory animals.[49,50] It has also been identified by the Agency as a compound exhibiting substantial evidence of carcinogencity.[67] It is very toxic [oral rat LD_{50} = 200 mg/Kg][49]. Chronic exposure to vinylidene chloride can cause damage to the liver and other vital organs as well as causing central nervous system effects. Additional information and specific references on the adverse effects of vinylidene chloride can be found in Appendix A.

Regulations - OSHA has set the TWA at 10 ppm.

Industrial Recognition of Hazard - DOT requires containers to be labeled "flammable liquid".

The toxic hazard of vinylidene chloride is suspected of

being similar to vinyl chloride which is moderately toxic via inhalation, Sax, Dangerous Properties of Industrial Materials.

9. Chloroform

Health Effects - Chloroform has been shown to be carcinogenic in animals and is recognized as a suspect human carcinogen.[51] It has also been identified by the Agency as a compound exhibiting substantial evidence of carcinogenicity[67]. Tangential evidence links human cancer epidemiology with chloroform contamination of drinking water.[52,53] Chloroform has also been shown to induce fetal toxicity and skeletal malformation in rat embryos.[54,55] Chronic exposure causes liver and kidney damage and neurological disorders.[52] Additional information and specific references on the adverse effects of chloroform can be found in Appendix A.

Ecological Effects - USEPA has estimated that chloroform accumulates fourteenfold in the edible portion of fish and shellfish.[52] The USEPA has recommended that contamination by chloroform not exceed 500 mg/l in freshwater and 620 mg/l in marine environment.[52]

Regulations - OSHA has set the TWA at 2 ppm. FDA prohibits use of chloroform in drugs, cosmetics, and food contact materials. The Office of Water and Waste Management has proposed regulation of chloroform under Clean Water Act 311 and is in the process of developing regulations under Clean Water Act 304(a). The Office of Air, Radiation, and Noise is conducting preregulatory assessment of chloroform under the Clean Air Act. The Office of Toxic Substances has requested additional testing of chloroform under Section 4 of conducting preregulatory assessment under the Federal Insecticide, Fungicide and Rodenticide Act.

Industrial Recognition of Hazard - Chloroform has been given a moderate toxic hazard rating for oral and inhalation exposures, Sax, Dangerous Properties of Industrial Materials.

10. Carbon Tetrachloride

Health Effects - Carbon tetrachloride is estimated to occur in this waste stream in low concentrations, but is a very potent carcinogen.(56) It has been identified by the Agency as a compound exhibiting substantial evidence of carcinogenicity.(67) The toxic effects [oral rat LD_{50} = 2800 mg/Kg] of carbon tetrachloride are amplified by both the habitual and occasional ingestion of alcohol.(57)

Obese individuals are especially sensitive to the toxic effects of carbon tetrachloride because the compound accumulates in body fat.(58) It also causes harmful effects in humans as the undernourished, those suffering from pulmonary diseases, gastric ulcers, liver and kidney diseases, diabetes, or glandular disturbances.(59)

The recommended criterion level in water designed to protect humans from the toxic effects of carbon tetrachloride is 2.6 mg/l.(57) In measurements made during the National Organics Monitoring Survey of 113 public water systems sampled, 11 of these systems had carbon tetrachloride at levels at or exceeding the recommended safe limit.(60) Carbon tetrachloride is a priority pollutant under Section 307(a) of the CWA. Additional information and specific references on the adverse effects of carbon tetrachloride can be found in Appendix A.

Ecological Effects - Movement of carbon tetrachloride within surface water systems is projected to be widespread. (see App. B)

Movement to this degree will likely result in exposure to aquatic life forms in rivers, ponds and reservoirs.

Carbon tetrachloride is likely to be released to the atmosphere from surface water systems. In the atmosphere, carbon tetrachloride is slowly decomposed to phosgene, a highly toxic gas. In the incineration of carbon tetrachloride-containing wastes, phosgene is likely to be emitted under incomplete combustion conditions.

Regulations - OSHA has set a TWA for carbon tetrachloride at 10 ppm. Carbon tetrachloride has been banned by the Consumer Product Safety Commission under the Hazardous Substances Act.

Industrial Recognition of Hazard - According to Sax, Dangerous Properties of Industrial Materials, the oral toxicity rating is high.

IV. References

1. Industrial Process Profiles for Environmental Use: Chapter 6, The Industrial Organic Chemicals Industry. Reimond Liepins, Forest Mixon, Charles Hudak, and Terry Parsons, February 1977, EPA-600/2-77-023f.

2. Engineering and Cost Study of Air Pollution Control for Petrochemical Industry-Vol. 3. Ethylene dichloride manufacture by oxychlorination, November 1974, EPA-450/3-73-006-c.

3. Source Assessment: Chlorinated Hydrocarbons Manufacture, EPA-600/2-79-019g, August 1979.

4. Water Quality Issues in Massachusetts, Chemical Contamination, Special legislative Commission on Water Supply. September 1979.

5. DeWalle, Foppe B. and Edward S. Chian. Detection of Trace Organics in Well Water Near a Solid Waste Landfill. Environ. Sci. Technol. (In Press).

6. Memo from Roy Albert to E.C. Beck, Administrator EPA Region II, Drinking Water Contamination of New Jersey Well Water, March 31, 1978.

7. Buller, R.D. 1979. Trichloroethylene Contamination of Ground Water Case History and Mitigative Technology. Presented at American Geophysical Union Fall Meeting, December 3-7, San Francisco, CA.

8. Wilson, J.T. and C.G. Enfield, 1979. Transport of Organic Pollutants Through Unsaturated Soil. Presented American Geophysical Union Fall Meeting, December 3-7, San Francisco, CA.

9. Zoetman, G.C.J., K. Harmsen, J.B.H.J. Linders, C.F.H. Morra, W. Sloop, 1979, Persistent Oranic Pollutants in River Water and Ground Water of the Netherlands. Presented at the 3rd International Symposium on Aquatic Pollutants, October 15-17, Jekyll Island, GA.

10. Roberts, P.V., P.L. McCarty, Mr. Reinhard, and J. Schriener, 1978. Organic Contaminant Behavism During Ground Water Recharge. Presented at the 51st Annual Conference of the Water Pollution Control Federation. October 1-6, Anaheim, CA.

11. National Cancer Institute. Bioassay of 1,2-Dichloroethane for Possible Carcinogenicity. U.S. Department of Health, Education and Welfare, Public Health Service, National Institutes of Health, National Cancer Institute, DHEW Publication No. (NIH) 78-827, 1978.

IV. References (Continued)

12a. McCann, J., E. Choi, E. Yamasaki, and B. Ames. Detection of Carcinogens as Mutagenic in the Salmonella/Microsome Test: Assay of 300 Chemicals. Proc. Nat. Acad. Sci. USA 72(2): 5135-5139, 1975a.

12b. McCann, J., V. Simmon, D. Streitwieser, and B. Ames. Mutagenicity of chloroacetaldehyde, a possible metabolic product of 1,2-dichloroethane (ethylene dichloride), chloroethanol (ethylene chlorohydrin), vinyl chloride, and cyclophosphamide. Proc. Nat. Acad. Sci. 72(8): 3190-3193, 1975.

13. Vozovaya, M. Changes in the Esterous Cycle of White Rats Chronically Exposed to the Combined Action of Gasoline and Dichloroethane Vapors. Akush. Geneko. (Kiev) 47(12): 65-66, 1971.

14. Vozovaya, M. Development of Offspring of Two Generations Obtained from Females Subjected to the Action of Dichloroethane. Gig. Sanit. 7: 25-28, 1974.

15. Vozovaya, M. The Effect of Low Concentrations of Gasoline, Dichloroethane and Their Combination on the Generative Function of Animals. Gig. Sanit. 6: 100-102, 1976.

16. Vozovaya, M. Effect of Low Concentrations of Gasoline, Dichloroethane and their Combination on the Reproductive Function of Animals. Gig. Sanit. 6: 100-102, 1976.

17. Vozovaya, M.A. The Effect of Dichloroethane on the Sexual Cycle and Embryogenesis of Experimental Animals. Akusk. Ginekol. (Moscow) 2: 57-59, 1977.

18. Urusova, T.P. (About a possibility of dichloroethane absorption into milk of nursing women when contacted under industrial conditions.) Gig. Sanit. 18(3): 36-37, 1953 (Rus).

19. Parker, J.C., et al. 1979. Chloroethanes: A review of Toxicity. Amer. Ind. Hyg. Assoc. J., 40: 46-60, March 1979.

20. U.S. EPA 1979. Chlorinated Ethanes: Ambient Water Quality Criteria (Draft)

21. NCI 1977. Bioassay of 1,1,1-trichloroethane for possible carcinogenicity. Carcinog. Tech. Rep. Ser. NCI-CG-TR-3.

22. Price, P.J. et al. 1978. Transforming activities of trichloroethane and proposed industrial alternatives.

23. U.S. EPA Report 1980 in Vitro 14:290. In Vitro microbiological mutagenicity of 81 compounds.

IV. References (Continued)

24. Schwetz, B.A. et al. 1974. Embryo and fetal toxicity of inhaled carbon tetrachloride, 1,1-dichloroethane and methylchloroform in rats. Toxicol. Appl. Pharmacol. 28: 452.

25. Walter, P. Chlorinated hydrocarbon toxicity a monograph PB-257185 Natl. Tech. Inf. Serv. Springfield, Virginia.

26. U.S. EPA, 1979. In-depth studies on health and environmental impact of selected water pollutants. Contract No. 68-01-4646.

27. National Cancer Institute. Bioassay of 1,1,2-trichloroethane for Possible Carcinogenicity. U.S. Department of Health, Education, and Welfare, Public Health Service, National Institutes of Health, National Cancer Institute, DHEW Publication No. (NIH) 78-1324, 1978.

28. Elovaara, E., et al. Effects of CH_2Cl_2, CH_3Cl_3, TCE, Perc and Toluene in the development of Chick Embryos, Toxicology 12: 111-119, 1979.

29. Truhaut, R., Lich, N.P., Dutertre-Catella, H., Molas, G., Huyen, V.N.: Toxicological Study of 1,1,1,2-tetrachloroethane. Archives des Maladies Professionnelles, de Medicine du Travail et de Securite 35(6): 593608, 1974.

30. Parker, J.C., I.W.F. Davidson, and M.M. Greenberg. EPA Health Assessment Report of 1,2-Dichloroethane (Ethylene Dichloride (Ethylene Dichloride) In Preparation.

31. National Cancer Institute. Bioassay of 1,1,2,2-Tetrachloroethane for Possible Carcinogenicity. U.S. Department of Health, Education, and Welfare, Public Health Service, National Institutes of Health, National Cancer Institute, DHEW Publication No. (NIH) 78-827, 1978.

32. Brem H., et al. 1974. The Mutagenicity and DNA-modifying effect of Haloalkanes. Cancer. Res. 34: 2576.

33. National Institute for Occupational Safety and Health. Criteria for a Recommended Standard ... Occupational Exposure to 1,1,2,2-Tetrachloroethane. U.S. Department Public Health Service, Center for Disease Control, National Institute for Occupational Safety and Health, DHEW (NIOSH) Publication No. 77-121, December 1976.

34. Page, Norbert P., and Jack L. Arthur Trichloroethylene. Special Occupational Hazard Review with Control Recommendations DHEW Publication No. (NIOSH) 78-130. January, 1978.

35. Blair, et al. 1979. Causes of death among laundry and dry cleaning workers. Am. J. Publ. Health 69: 508-511.

IV. References (Continued)

36. IARC Monographs, Volume 20: 545-572.

37. U.S. EPA, 1979. Trichloroethylene. Ambient Water Quality Criteria.

38. National Cancer Institute (1977) Bioassay of Tetrachloroethylene for Possible Carcinogenicity, DHEW Publication No. (NIH) 77-813.

39. C. Parker, EPA, ECHO/ICTP.

40. Bignell, P.C. & Ellenberger, H.A. (1977). Obstructive jaundice due to a chlorinated hydrocarbon in breast milk. Con. Med. Assoc. J., 117, 1047-1048.

41. Viola, P.L., et al. Oncogenic response of cat skin, lungs, and liver to vinyl chloride. Cancer Res. 31: 516. 1971.

42. Maltoni, C. and G. Lefemine, Carcinogenicity bioassays of vinyl chloride. Am. N.Y. Acad. Sci. 246: 195., (1975).

43. Creech & Johnson. Angiosarcoma of the liver in the manufacture of polyvinyl chloride. J. Occup. Med. 161: 150, 1974.

44. Tabershaw, I.R., and Gaffey, W.R. Mortality study of workers in the manufacture of vinyl chloride and its polymers. J. Occup. Med. 16: 509 (1974).

45. Oster, R.H. et al. Anesthesia XXVII Narcosis with Vinyl Chloride. Anesthesiology 8: 359, 1947.

46. Cair, J. et al. Anesthesia XXIV. Chemical constitution of hydrocarbons and cardiac automaticity. J. Pharmaceut. 97: 1 (1949).

47. Torkerson, T.R., et al. The toxicology of Vinyl Chloride by repeated experience of laboratory animals. Amer. Ind. Hyg. Assoc. J. 22: 304. 1961.

48. Lester D., et al. Effects of single and repeated exposures of humans and rats to vinyl chloride. Amer. Ind. Hyg. Assoc. J. 24: 265. 1963.

49. Environmental Health Perspectives, 1977. Vol. 21, 333 pp.

50. USEPA, 1979 Vinylidene Chloride Hazard Profile, USEPA/ECAO Cincinnati, Ohio 45268 1979.

51. National Cancer Institute, 1976. Report on Carcinogenesis Bioassay of Chloroform. National Technical Inf. Serv. PB-264018. Springfield, VA.

IV. References (Continued)

52. USEPA, 1979. Trichloromethane (chloroform) Hazard Profile, USEPA/ ECAO Cincinnati, Ohio 45268. 1979.

53. McCabe, L.J., 1975. Association between Trihalomethanes in Drinking Water (NORS data) and Mortality. Draft report. U.S. Environmental Protection Agency.

54. Thompson, D.J., et al. 1974. Teratology Studies on Orally Administered Chloroform in the Rat and Rabbit. Toxicol. Appl. Pharmacol. 29: 348.

55. Schwetz, B.A., et al. 1974. Embryo and Fetotoxicity of Inhaled Chloroform in Rats. Toxicol. Appl. Pharmacol. 28: 442.

56. National Cancer Institute. Carcinogens Bioassay of Carbon Tetrachoride, 1976.

57. U.S. EPA. Carbon Tetrachloride: Ambient Water Quality Criteria Document, 1979.

58. U.S. EPA, 1979. Water-Related Environmental Fate of 129 Priority Pollutants. EPA-440/4-79-029b.

59. Von Oettingen, W.F., The Halogenated Hydrocarbons of Industrial and Toxicological Importance. In: Elsevier monographs on Toxic Agents, E. Browning, Ed., 1964.

60. U.S. EPA. Determination of Sources of Selected Chemicals in Waters and Amounts from these Sources, 1977.

61. "Combustion Formation and Emission of Trace Species", John B. Edwards, Ann Arbor Science, 1977.

62. NIOSH Criteria for Recommended Standard: Occupational Exposure to Phosgene, HEW, PHS, COL, HIOSH, 1976.

63. Chemical and Process Technology Encyclopedia, McGraw Hill, 1974.

64. "Love Canal Public Health Bomb." A Special Report to the Governor and Legislature, New York State Dept. of Health (1978).

65. Lowenheim and Moran. Faith, Keyes, and Clark's Industrial Chemicals, 4th ed., John Wiley and Sons, Inc. 1975.

66. Kirk-Othmer. Encyclopedia of Chemical Technology - 3rd ed., John Wiley and Sons, Inc. 1979.

67. Cancer Assessment's Group List of Carcinogens, April 22, 1980.

LISTING BACKGROUND DOCUMENT

FLUOROCARBON PRODUCTION

Aqueous spent antimony catalyst waste from fluoromethanes production. (T)

I. Summary of Basis for Listing

The production of chlorofluoromethanes via the liquid phase fluorination process results in the generation of an aqueous spent antimony catalyst waste which contains both toxic organic and inorganic substances, two of which are carcinogenic. The waste constituents of concern are antimony compounds, chloroform and/or carbon tetrachloride.

The Administrator has determined that the wastewater from the production of chlorofluoromethanes via the liquid phase fluorination process is a solid waste which may pose a substantial present or potential hazard to human health or the environment when improperly transported, treated, stored, disposed of or otherwise managed, and therefore should be subject to appropriate management requirements under Subtitle C of RCRA. This conclusion is based on the following considerations:

(1) The waste stream contains significant quantities of antimony compounds, chloroform and/or carbon tetrachloride.*

*Depending on the type of fluorocarbon being produced, either chloroform or carbon tetrachloride will be used as a raw material and appear in the waste stream as an excess reactant (see discussion, "Industry Profile and Process Description," below).

(2) Chloroform, carbon tetrachloride, and antimony compounds are highly toxic. Chloroform and carbon tetrachloride has been evaluated by EPA as substances exhibiting substantial evidence of carcinogenicity. Carbon tetrachloride has been shown to be teratogenic.

(3) Chloroform and carbon tetrachloride are resistant to water treatment methods and are therefore likely to appear in drinking water if allowed to migrate from the waste into drinking water sources. These two constituents are also volatile and may pose a threat to human health via an air exposure pathway if not properly managed. Antimony compounds will persist in the environment (in some form) vitually indefinitely; therefore if allowed to migrate from the waste may contaminate drinking water sources for long periods of time.

(4) It is estimated that approximately 30,000 to 60,000 lbs. of spent catalyst is generated annually by the two plants using liquid phase fluorination and will be in the aqueous waste stream. The substantial quantity of waste generated increases the possibility of exposure should mismanagement occur.

(5) Damage incidents involving the contamination of groundwater by antimony compounds, chloroform and carbon tetrachloride confirm the ability of these waste constituents to be mobile, persist, and cause substantial harm.*

II. Industry Profile and Process Description (29,30)

Chlorofluoromethanes are manufactured by the fluorination of chlorocarbons. Two different fluorination processes may be used: liquid phase or vapor phase. This document is concerned solely with the aqueous spent catalyst waste from the manufacture of the

*Although no data on the corrosivity of spent antimony catalyst is currently available, the Agency believes that this waste stream may have a pH greater than 12.5 and may therefore be corrosive. Under §§261.22 and 262.11, generators of this waste stream are responsible for testing their wastes in order to determine whether their waste is corrosive.

chlorofluoromethanes that are produced via liquid phase fluorination.* The commercial products produced by this segment of the fluorocarbon industry include chlorotrifluoromethane ($CClF_3$), dichlorodifluoromethane (CCl_2F_2), trichlorofluoromethane (CCl_3F), and chlorodifluoromethane ($CHClF_2$). Of the five (5) companies that manufacture these products, it is believed that two have plants that use the liquid phase fluorination process and generate the waste stream of concern:

	Company		Location	Plant Size - Million Pounds Per Year
(1)	DuPont		Antioch, CA	
			Deepwater, NJ	
			East Chicago, IN	
		**	Louisville, KY	
			Matague, MI	500
(2)	Allied Chemical		Baton Rouge, LA	
			Danville, IL	
			Elizabeth, NJ	
			El Segundo, CA	190
(3)	Kaiser Aluminum & Chemical		Gramercey, LA	80
(4)	Pennwalt		Calvert City, KY	
			Throughfare, NJ	60
(5)	Racon, Inc.	**	Wichita, KS	50
			Total:	880

(Source: reference 31)

*In the vapor phase fluorination process, a proprietary, largely insoluble, metallic catalyst is used in place of the antimony catalyst. The vapor phase catalyst will tend to last longer and have lower concentrations of the constituents of concern than the antimony catalyst used in liquid phase fluorination.

**These two plants use liquid phase fluorination and generate spent antimony chloride catalyst waste.

The chlorofluoromethanes in the product family of concern are manufactured by fluorinating either carbon tetrachloride (CCl_4) or chloroform ($CHCl_3$) using hydrogen fluoride (HF) and antimony pentachloride ($SbCl_5$) as a catalyst (see Figure 1). Carbon tetrachloride is used as a starting material when trichlorofluoromethane (CCl^3F), dichlorodifluoromethane (CCl_2F_2), and chlorotrifluoromethane ($CClF^3$) are the desired products. (Tetrafluoromethane (CF_4) is also formed as a co-product waste.) Chloroform is used as feedstock when chlorodifluoromethane ($CHClF_2$) and dichlorofluoromethane ($CHCl_2F$) are the desired products. (A small amount of trichlorotrifluoroetha ($C_2Cl_3F_3$) and trifluoromethane (CHF_3) are formed as co-product waste In both processes, the chlorine (Cl) in the starting materials is successively replaced with fluorine (F). For example, starting with carbon tetrachloride (CCl_4), and hydrogen fluoride, the reaction is carried out continuously to produce the product mix desired, usually a 50/50 blend of trichlorofluoromethane (CCl_3F) and dichlorodifluoromethane (CCl^2F^2) as illustrated by the following equations:

(1) $CCl_4 + HF \longrightarrow Cl_3C\text{-}F + HCl$

(2) $Cl_3C\text{-}F + HF \longrightarrow CCl_2F_2 + HCl$

The main features of the process are shown in Figure 1. During the process, the antimony pentachloride catalyst ($SbCl_5$) is reduced to antimony trichloride ($SbCl_3$). A slip

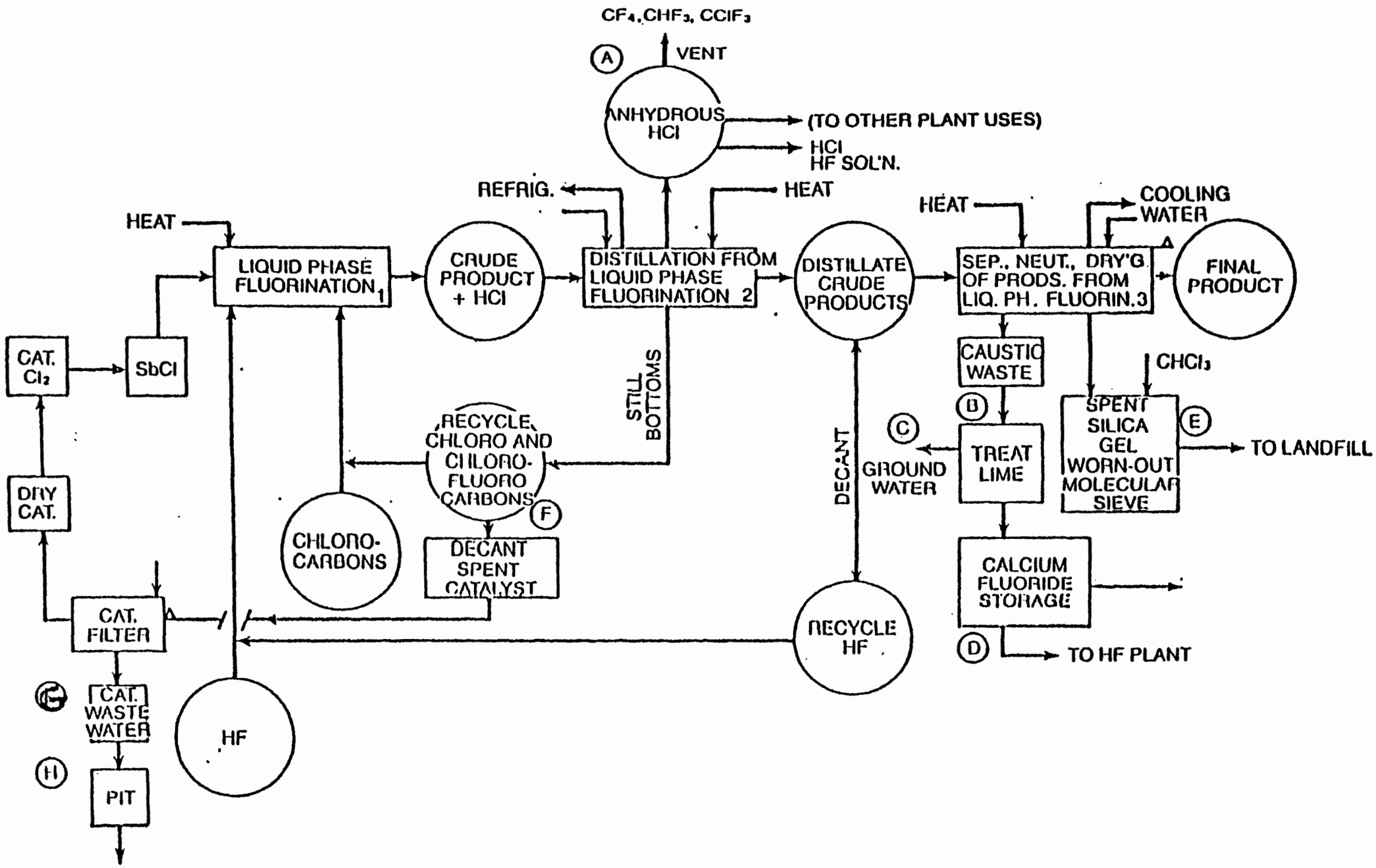

Figure 1. FLOWSHEET FOR PRODUCTION OF FLUOROCARBONS BY LIQUID PHASE FLUORINATION (Based on information in References 29 and 30.)

stream is taken from (F) (see Figure 1.) to remove an aliquot portion of the spent catalyst. After washing, the aqueous spent catalyst wastes (G) are sent to pits (H) where they are either disposed of or stored until further treatment. (The bulk of the antimony trichloride is recovered by the catalyst filter and dried and reactivated by chlorination to form antimony antimony pentachloride, which is recycled to the fluorinator.)

III. Waste Composition, Generation and Management

Based on knowledge of process chemistry and best engineering judgment, the spent catalyst wastewater from liquid phase fluorination is expected to contain significant concentrations of the following constituents:

(1) Spent antimony chloride catalyst not recovered by the catalyst filter. This spent catalyst wastewater will contain antimony trichloride as a metallic ion and other antimony compounds.

(2) Organic residues from feedstock materials. These will include either carbon tetrachloride or chloroform, depending on which fluorocarbons are being produced.

Based on an estimated production of 100 million lb/yr (at the Dupont, Louisville, and Racon plants), it is estimated

that 30-60 thousand lbs. of spent catalyst are generated annually and will be contained in the spent catalyst wastewater.* The wastewater will also contain dissolved chloroform and carbon tetrachloride in maximum concentrations of about 0.8 gms/100 gms of wastewater (based on these constituents water solubilities). Undissolved chloroform and carbon tetrachloride will also be entrained in the wastewater unless the organic layer of the aqueous wastestream has been separated prior to disposal. These wastes are typically discharged to clay-lined pits (26) either for disposal or storage until further treatment.

IV. Discussion of Basis for Listing

A. Hazards Posed by Waste

As noted above, the waste components of concern are antimony compounds, carbon tetrachloride and/or chloroform. Antimony compounds, chloroform and carbon tetrachloride are highly toxic. Chloroform is a suspected carcinogen. Carbon tetrachloride is a very potent carcinogen and has also been shown to be teratogenic.

---

*This estimate is also based on data in "Fluorocarbon Hydrogen Fluoride Industry", EPA-600/2-77-023 February 1977. This quantity is believed significant, since large quantities of hazardous waste constituents are available for environmental release, increasing the risk of exposure should mismanagement occur.

B. Exposure pathways and migratory potential

The waste constituents of concern may migrate from improperly designed or managed disposal or storage sites and contaminate ground and surface waters. Antimony trichloride is extremely soluble (601.6 gm/100 gm H_2O @ 0°C), chloroform is highly soluble (2200 mg/l @ 25°C), and carbon tetrachloride is quite soluble (800 mg/l @ 20°C). Chloroform and carbon tetrachloride are also highly volatile: 160 mm Hg @ 20°C and 91 mm Hg @ 20°C, respectively (water has a volatility of about 17.5 mm Hg @ 20°C).[28]

Storage or disposal in clay-lined pits is the most usual management method for these wastes. This practice may be adequate to prevent soil and/or groundwater contamination if pits are properly constructed and managed. However, if these pits are not properly constructed, they can develop cracks or leaks through thin points in the wall with subsequent release of the waste into the environment, in light of the waste constituents' migratory potential. In any case, wastes are hazardous under RCRA even if they are properly managed in fact. The potential of the waste to cause substantial harm is the key factor, and these wastes are believed to have ample potential to cause substantial hazard.

These wastes also may cause harm via additional exposure pathways. There is also a danger of migration into or contamination of surface waters if the pits pits are improperly designed or managed. Thus inadequate flood control measures could result in washout or overflow of the wastes. If the wastes

are allowed to reach too high a level in the pits, the pits may overflow during periods of heavy rain, releasing their contents which may find their way into and contaminate surface water.

There is also a danger of migration into the atmosphere if the disposal sites are inadequately designed or managed. Since chloroform and carbon tetrachloride are highly volatile, they may escape into the air and present a hazard to human health via an air inhalation pathway. Thus, these hazardous constituents could migrate from disposal sites with inadequate cover.

Actual damage incidents confirm that these waste constituents are mobile, persist and cause substantial hazard if improperly managed. The migratory potential of antimony compounds is confirmed by the fact that groundwater contamination from disposed antimony sludges has been observed in an Iowa incident (2).

The migratory potential via an air pathway of chloroform and carbon tetrachloride is confirmed by the fact that both constituents have been identified as air contaminants in both schools and basements of homes located at Love Canal, New York ("Love Canal Public Health Bomb", A Special Report to the Governor and Legislature, New York State Department of Health, 1978). Chloroform has also migrated from the

Love Canal site into surrounding basement sumps, demonstrating ability to migrate through soils. (Id.) Other incidents of groundwater contamination due to improper storage and burial of chloroform-containing wastes further confirm chloroform's ability to migrate through soils and contaminate groundwater. In one incident, chloroform was detected in a well at Dartmouth, MA. In a similar incident at Woburn, MA., chloroform migrated from an underground burial site to contaminate a municipal well in the vicinity (4).

Antimony, since it is an elemental metal, will persist indefinitely in some form in the environment. Antimony trichloride also reacts vigorously with moisture, generating heat and highly irritating hydrogen chloride gas. The antimony component which results from this reaction can also cause systemic effects (27).

The carbon tetrachloride and chloroform in the waste are volatile and if stored in an open clay pit will tend to slowly evaporate. Should the chloroform or carbon tetrachloride reach ground or surface water prior to evaporation, as both have been known to do (see above and p. 12), they could travel significant distances due to their resistance to microbial degradation (3). In addition, carbon tetrachloride and chloroform are resistant to water treatment and, if they are present in drinking water sources, are likely to appear in drinking water.(19,18) The incidents of the migration of these harmful constituents previously mentioned (see p. 9) demonstrate

that they may persist long enough to reach and cause harm to a receptor, via either a water (ground or surface) or air pathway.

C. Health and Ecological Effects

1. Chloroform

Health Effects - Chloroform has been recognized and regulated as a suspected carcinogen (32). It is also considered toxic [oral rat LD_{50}=800 mg/kg] and has been evaluated by CAG as having substantial evidence of carcinogenicity. Tangential evidence links human cancer epidemiology with chloroform contamination (6) of drinking water. In laboratory studies, chloroform induces liver cancers in mice and causes kidney tumors in experimental rats (7). Chloroform was shown to induce fetal toxicity and skeletal malformation in rat embryos (8,9). Chloroform is a priority pollutant under Section 307(a) fo the CWA. Additionaly information on the adverse health effexts of chloroform can be found in Appendix A.

Ecological Effects - The U.S. EPA has determined that chloroform accumulates fourteen-fold in the edible portion of fish and shellfish (10).

Regualtions - OSHA has set the time weighted average at 50 ppm.

Industrial Recognition of Hazard - Chlorofrom has been given a toxic hazard rating via oral routes by Sax in Dangerous Properties of Industrial Materials.

2. Carbon Tetrachloride

Health Effects - Carbon tetrachloride is a very potent carcinogen (11) and has also been shown to be teratogenic in rats when inhaled at low concentrations (12). It has also been evaluated by CAG as having substantial evidence of carcinogenicity. Chronic effects of this chemical on the human central nervous system have occurred following inhalation of extremely low concentrations (20 ppm), with death at 1000 ppm (13). Adverse effects of carbon tetrachloride on liver and kidney function (acute and often irreversible hepatic failure), and on respiratory and gastrointestinal tracts (14,15) have also been reported. The toxic effects of carbon tetrachloride are amplified by both the habitual and occasional ingestion of alcohol (16). Especially sensitive to the toxic effects of carbon tetrachloride are obese individuals because the compound accumulates in body fat (17). It also causes harmful effects in undernourished humans, those suffering from pulmonary diseases, gastric ulcers, liver or kidney diseases, diabetes, or glandular disturbances (18). Carbon tetrachloride is a priority pollutant under Section 307(a) of the CWA. Additional information and specific references on the adverse effects of carbon tetrachloride can be found in Appendix A.

Ecological Effects - In measurements made during the National Organics Monitoring Survey of 113 public water systems sampled, 11 of these systems had carbon tetrachloride at levels at or exceeding the recommended safe limit (19).

Regulations - OSHA has set a TWA for carbon tetrachloride as 10 ppm. Carbon tetrachloride has been banned under the Hazardous Substances Act by the Consumer Product Safety Commission.

Industrial Recognition of Hazard - According to Sax, Dangerous Properties of Industrial Materials, carbon tetrachloride is considered a high systemic poison through ingestion and inhalation.

3. Antimony Compounds

Health Effects - Chronic antimony exposure has been most commonly associated with pulmonary, cardiovascular, (20) dermal, and certain effects on reproduction, (21) development, (22) and longevity (23,24). Antimony trichloride [oral rat LD_{50}=525 mg/kg] and antimony pentachloride [oral rat LD_{50}=1,115 mg/kg] are considered toxic. Adverse effects can be expected from the tri- and pentachlorides based on acute toxicities of the compounds to rats. Additional information on the adverse health effects of antimony compounds can be found in Appendix A.

Regulations - OSHA has set the TWA at 0.5 mg/m^3.

Industrial Recognition of Hazard - Sax, Dangerous Properties of Industrial Materials, lists antimony as highly toxic via oral and inhalation routes.

IV. References

1. Jennings, A.F. and M.C. Schroeder, 1968. Laboratory Evaluation of Selected Radioisotopes as Groundwater Tracers. Water Resources Res. 4:829-838.

2. Iowa Department of Environmental Quality, South Charles City, IA, 1977.

3. Zoetlman, B.C.J., et al. 1979. Persistent Organic Pollutants in River Water and Ground Water of the Netherlands. Presented at 3rd International Symposium on Aquatic Pollutants, Oct. 15-17, Jekyll Island, Ga.

4. Water Quality Issues in Massachusetts, Chemical Contamination, Special Legislative Commission on Water Supply, Sept. 1979.

5. Naitonal Cancer Institute, 1976. Report on Carcinogenesis Bioassay of Chloroform. National Technical Inf. Serv. PB-264018. Springfield, Virginia.

6. McCabe, L.J. 1975. Association between trihalomethanes in drinking water (NORS data) and mortality. Draft report. U.S. Environmental Protection Agency.

7. U.S. EPA, 1979. Trichloromethane (Chloroform), Hazard Profile, USEPA/ECAO, Cincinnati, Ohio, 1979.

8. Schwetz, B.A., et al. 1974. Embroy and Tetotoxicity of Inhaled Chloroform in Rats. Toxicol. Appl. Pharmacol. 28:442.

9. Thompson, D.J., et al. 1974. Teratology Studies on Orally Administered Chloroform in the Rat and Rabbit. Toxicol. Appl. Pharmacol. 29:348

10. National Academy of Sciences. 1978a. Non-fluorinated Halomethanes in the Environment, Environmental Studies Board, National Res. Council, Washington, D.C.

11. National Cancer Institute, 1976. Carcinogen Bioassay of Carbon Tetrachloride.

12. Schwetz, B.A., B.K.K. Leong and P.J. Gehring, "Embroy- and Fetotoxicity of Inhaled Carbon Tetrachloride, 1,1-Dichloroethane and Methyl Ethyl Ketone in Rats," Toxicology and Applied Pharamacology, Vol. 28, No. 3, June 1974, p. 452-464.

13. Association of American Pesticide Control Officials, Inc. 1966 ed., Pesticide Chemical Official Compendium. p. 198.

14. Texas Medical Association, Texas Medicine, Vol. 69, p. 86, 1973.

15. Davis, Paul A. "Carbon Tetrachloride as an Industrial Hazard," The Journal of the American Medical Association. Vol. 103, July-Dec. 1934, p. 962-966.

16. U.S. EPA. Carbon Tetrachloride: Ambient Water Quality Criteria Document, 1979.

17. U.S. EPA. Water-related Environmental Fate of 129 Priority Pollutants. EPA-440/4-79-0296, 1979.

18. Von Oettingen, W.F., the Halogenated Hydrocarbons of Industrial and Toxicological Importance. In: Elsevier Monographs on Toxic Agents, E. Browning, Ed., 1964.

19. U.S. EPA. Determination of Sources of Selected Chemicals in Waters and Amounts from These Sources, 1977.

20. Brieger, H., et al. 1954. Industrial Antimony Poisoning. Ind. Med. Surg. 23:521.

21. Belyaeva, A.P. 1967. The Effect of Antimony on Reproduction. Gig. Truda. Prof. Zabel 11:32.

22. Gross, Hal, 1955. Toxicological Study of Calcium Halophosphate Phosphors and Antimony Trioxide in Acute and Chronic Toxicity and Some Pharmacological Aspects. Arch. Indust. Health 11:473.

23. Schroeder, H.A., 1970, A Sensible Look at Air Pollution by Metals. Arch. Environ. Health, 21:798.

24. Schroeder, H.A., and L.A. Kraemer. 1974. Cardiovascular Mortality, Municipal Water, and Corrosion. Arch. Environ. Health. 28:303.

25. Casarett and Doull, Toxicology, p. 627, MacMillan, New York.

26. Personal Communication, Richard Deutsch, E.I. Dupont de Nemours and Company, Louisville, KY, December 1979.

27. Sax, N. Irving, Dangerous Properties of Industrial Materials. 4th Edition, Litton Education Publishing, Inc., 1975.

15

28. Dawson, English, and Petty, 1980. Physical Chemical Properties of Hazardous Waste Constituents.

29. Kirk-Othemer. Encyclopedia of Chemical Technology. 5. John Wiley and Sons, Inc., New York, 1964.

30. Lowenheim, F.A. and Moran, M.K. Faith, Keyes and Clark's Industrial Chemistry. Fourth Ed. John Wiley and Sons, New York, 1975.

31. SRI International, Directory of Chemical Producers - United States, Menlo Park, California, 1979.

32. CAG List of Carcinogens, April 22, 1980.

LISTING BACKGROUND DOCUMENT

PHENOL/ACETONE PRODUCTION

Distillation Bottom Tars from the Production of Phenol/ Acetone from Cumene. (T)*

I. Summary of Basis for Listing

Distillation bottom tars from the production of phenol/acetone from cumene contain toxic and potentially carcinogenic organic substances. These include phenol and polycyclic aromatic hydrocarbons (PAH) as the pollutants of concern.

The Administrator has determined that the solid waste from phenol/ acetone production may pose a substantial present or potential hazard to human health or the environment when improperly transported, treated, stored, disposed of or otherwise managed, and therefore should be subject to appropriate management requirements under Subtitle C of RCRA. This conclusion is based on the following considerations:

1. Approximately 100-220 million pounds of these wastes containing phenol and polycyclic aromatic hydrocarbons from tars are generated per year at 11 plants in the United States.

2. Tars containing polycyclic aromatic hydrocarbons are demonstrated carcinogens and mutagens, as well as being toxic. Phenol is a suspect carcinogen and is toxic.

3. There is potential for mismanagement of the waste by leakage during transport or storage, by improper disposal allowing leaching, or by incomplete incinerator combustion.

*The Agency believes that the listing description "distillation bottom tars" is more accurate than the originally proposed description "heavy tars". The stream listed in this document does not, however, differ from the one initially proposed.

4. The waste tars persist in the environment, and phenol can spread rapidly in ground or surface water, posing a risk of exposure to these hazardous compounds to humans.

II. Sources of Waste and Typical Disposal Practices

A. Profile of the Industry

Phenol/acetone is produced from cumene in eleven manufacturing plants scattered throughout nine states. Production data from 1978 have been reported to be 1,915 MM* lb phenol and 1,171 MM lb acetone[1].

B. Manufacturing Process[13,14]

There are two steps in the manufacturing process: (1) oxidation of cumene to cumene hydroperoxide, and (2) cleavage of the hydroperoxide to form phenol and acetone. (A process flow chart is contained as Figure I below.) Cumene hydroperoxide is the first main reaction product when cumene is oxidized with air at 130°C in an aqueous sodium carbonate medium. The reaction mix is circulated to a vacuum column where unreacted cumene is separated from the mix and a cumene hydroperoxide concentration of about 80% is obtained in the bottoms product. Recovered cumene is recycled to the reactor. Any alpha methyl styrene contained in the recovered cumene is separated by distillation and sold or incinerated. However, not all of the alpha methyl styrene may be separated at this point. The 80% cumene hydroperoxide cumene mixture is then reacted with 10-25% sulfuric acid at 60°C and co-mixed with an inert solvent (such as benzene) to extract organic material from the aqueous acid. The mixture is allowed to settle. The acid phase is separated out and recycled to the process. The organic layer remaining is neutralized with dilute sodium hydroxide. The

*MM - one million

resultant aqueous waste stream containing sodium sulfate, sodium phenate, phenol, acetone, and sodium stearate is separated and sent to wastewater treatment.* The crude, neutralized organic layer is then sent to a series of distillation columns where acetone, cumene, phenol and acetophenone and the solvent are recovered. The first column separates a crude acetone product overhead that is further purified by distillation. The bottoms from the acetone distillation column pass through a water scrubber to remove residual acetone and inorganic salts. They then pass to a series of columns where the lower boiling hydrocarbons, solvents, cumene, and alphamethyl styrene are successively removed, recovered and sold, or recycled or disposed. The bottoms from the last of the series of columns is crude phenol. It goes to a crude phenol surge where any remaining water is settled out. The crude phenol is refined in the next distillation column from which the purified phenol is removed overhead.

The bottoms from the phenol still contain phenol, acetophenone, cumyl phenol, phenyl di-methyl carbinol, higher boiling phenolic compounds, and polymers. This mixture may be further distilled to recover the acetophenone. The still bottoms remaining at the completion of distillation are the waste streams of concern in this document.

C. Waste Generation and Management

The distillation bottoms are a tarry solid in physical

*The Agency is not listing this wastewater stream at the present time, but solicits data regarding waste composition and quantity, waste constituent concentrations, and waste management practices.

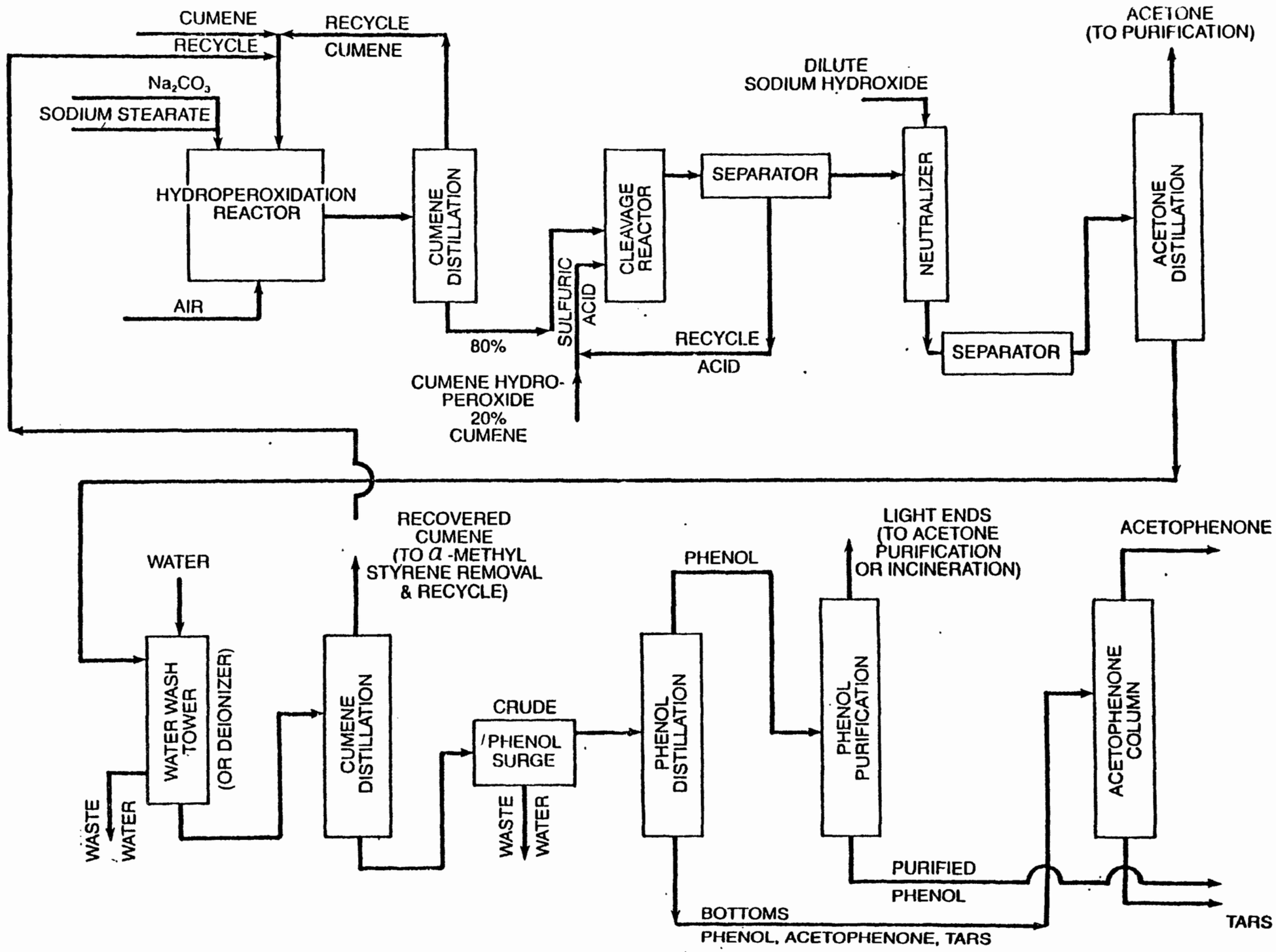

Figure 1. FLOW DIAGRAM—PHENOL/ACETONE FROM CUMENE (MODIFIED FROM REFERENCE 13)

form. An EPA study (Monsanto Research Study Vol. 6) states that these wastes (i.e, the tars generated at the bottom of the acetophenone distillation column) amount to 50 - 110 g tar/Kg (100-220 lb tar/ton of phenol) of phenol product. The reported analysis and quantification breakdown of this residue is:

Acetophenone	1.9 g/Kg (3.8 lb/ton) phenol
Phenol	0.75 g/Kg (1.5 lb/ton) phenol
Cumyl phenol	0.85 g/Kg (1.7 lb/ton) phenol
Total tars	50 - 110 g/Kg (100-220 lb/ton) phenol

The relative concentrations of the various waste constituents can thus be calculated from these production figures.

As is shown above, the waste tars are expected to contain large concentrations of polycyclic aromatic hydrocarbons for the following reasons. Cumene (the essential feedstock material) is itself an aromatic. In the successive steps of hydroperoxidation and acid cleavage, the aromatic ring can open, and polyaromatic ring structures formed. These are high-boiling substances and will be found in the distillation bottom tars.

The subject bottom tar residue is generally incinerated in combined organic wastes incinerators within plant limits.(2) Plants which do not have incinerators hire contract waste haulers/landfillers.(2)

III. Discussion of Basis for Listing

A. Hazards posed by the Wastes

Based on 1977 product production levels (p. 2), the U.S. production of phenol/acetone from cumene generates an estimated 100-220 million lbs of the subject waste annually. The principal waste

components of concern are phenol and tars.[3] Phenol is a suspect carcinogen and is toxic. The tars are also suspect carcinogens due to the presence of polycyclic aromatic hydrocarbons (PAH). These waste constituents are capable of migration from the waste to groundwater. Phenol is extremely soluble (67,000 ppm in water) (App B). PAH's contained in tars are less subject to migration, but are highly persistent. (See p. 8 below.) Actual damage incidents and field measurements confirm predictions that waste constituents are capable of migration, mobility, and persistence. Phenol has been found in ppb and ppm concentrations in leachate from sites such as Love Canal, Story Chemical and La Bounty in Charles City, Iowa.[13] Levels some eight times above the proposed water quality criteria were found in runoff 1.5 miles from a disposal site near Byron, Illinois.[13]* Residuals and ppb levels of PAH's have been found in leachate samples from the Wade Site (Chester, PA), Reilly Tar and Chemical Co. (St. Louis Park, MN), and Kin-Buc Landfill (Middlesex, NJ)[13].

The primary means of disposal of residue are landfilling or incineration,[2] prior to which the wastes are held temporarily in storage containers. Mismanagement by leakage during transport or storage, improper disposal allowing leaching, or incomplete incinerator combustion may all realistically occur, with resulting high potential to cause serious human health effects and exposure of animals in the area through direct contact and through pollution of surface and groundwater.

*The reference to the proposed water quality criteria in the text is not meant to use the proposed standard as a regulatory benchmark, but to indicate qualitatively that phenol may cause a potential hazard if it migrates from the waste in small concentrations.

Thus, disposal in a landfill, even if plastic-lined drums are used, represents a potential hazard due to the leaching of toxic compounds if the landfill is improperly designed or operated (i.e., drums corrode in the presence of even small amounts of water). Landfills may, for example, be sited in areas with highly permeable soils, allowing leachate to migrate to groundwater. Proper leachate control and monitoring may not be in current use, again facilitating leachate migration to groundwater, and resulting migration to environmental receptors. Storage prior to incineration or off-site disposal could lead to similar hazards as improper landfilling, since improperly stored wastes are capable of leaking and contaminating soil and groundwater.

Transport to off-site disposal sites by contract haulers also could result in mismanagement and environmental insult. Not only could these wastes be mishandled in transit, but (absent of proper regulatory control) there is no assurance that these wastes will arrive at their intended destination. As a result, they may become available to do harm elsewhere.

Mismanagement of incineration operations resulting from improper combustion conditions related to temperature, residence time and mixing, could lead to the release into the atmosphere of vapors containing hazardous products of incomplete combustion, including the waste constituents of concern.

Should waste constituents be released from the management environment, they are likely to persist and reach environmental receptors, as shown by the data presented on p. 6 above. Degradative processes

do not appear to appreciably reduce dangers of exposure. Phenol biodegrades at a moderate rate in surface water and soil, but moves readily (App. B.). Even with persistence of only a few days, the rapid spreading of phenol (due to its very high solubility) could cause widespread damage of the ecosystem and contamination of potable water supplies. A phenol spill accident in Wisconsin resulted in the movement of phenol into groundwater and contamination of well water for more than 1000 ft. from the spill. Phenol poisoning symptoms in humans developed from consumption of the well water.(5) Phenols were also implicated in one of the damage incidents mentioned in the principal Congressional report on RCRA, again indicating their likelihood to migrate and persist if mismanaged. (See H. Rep. No. 94-1491, 94th Cong., 2nd Sess., 21.) High local concentrations from indiscriminate dumping could easily exceed the limit. If phenol were to migrate to its limit of solubility, concentration levels would be over 10,000 times the proposed human health water quality criteria, indicating a potential chronic toxicity hazard.*(16)

Tar substances of the subject type generally contain polycyclic aromatic hydrocarbons (PAH) which are classified as priority pollutants. The PAH's are limited in movement, but persistent in the environment.

*The reference to the proposed water quality criteria in the text is not meant to use the proposed standard as a regulatory benchmark, but to indicate qualitativly that phenol may cause a substantial hazard if it migrates from the waste in small concentrations.

PAH's are tightly absorbed by fine particles, and so are most likely associated with stream, river, and lake sediments.(15) Aquatic animal and plant species living in these media could suffer serious adverse effects. Furthermore, substantial hazard is associated with exposure to extremely small PAH concentrations (concentrations of PAH estimated to result in additional lifetime cancer risks of 1 in 100,000 one 9.7 ng/l(15)) so that only minute concentrations need migrate to create substantial harm.(15)*

B. Health and Ecological Effects

1. Tars

Health Effects - Tars containing polycyclic aromatic hydrocarbons (PAH) are suspected carcinogens and mutagens, as well as being toxic.(15)

Tars, in an oily waste containing petroleum lubricants, are very toxic chemicals. They are absorbed into the body by inhalation, ingestion, and through the skin. The oral LD_{50} in animals (dog, rabbit) is 600 mg/kg(6). Long term dermal exposure (1-43 years) to coal tar has been reported to cause malignant tumors on hands, face, and neck of briquette factory workers(7). The U.S.E.P.A. Cancer Assessment Group has recommended 9.7 ng/l total PAH limit for water criteria. The limit was based on animal test data and designed to minimize lifetime cancer risk at a rate below 1 in 100,000(8). The limit might reasonably be expected to be exceeded in cases of inadequate

*The reference to the proposed water quality criteria in the text is not meant to use the proposed standard as a regulatory benchmark, but to indicate qualitatively that PAH's may cause a potential hazard if it migrates from the waste in small concentrations.

industrial waste disposal. Polycyclic aromatic hydrocarbons are designated as priority pollutants (acenaphthylene, anthracene, benzo(a) anthrocene, benzo(a) pyrene, benzofluoranthene, benzo perylene, chrysene, dibenzo(a, h) anthracene, fluorene, indenopyrene, phenathrene, pyrene) under section 307(a) of the CWA. Additional information and specific references on the adverse effects of PAH tars can be found in Appendix A.

Ecological Effects - When small amounts of coal tar were mixed with food and fed to ducks, the toxicologic effect was anemia and extensive liver damage.(9)

Regulations - The NIOSH recommended standard for occupational exposure to tar products shall be controlled so employees are not exposed to substances at a concentration greater than 0.1 mg/m^3 for a ten-hour work shift. PAH's are regulated by the Office of Water and Waste Management of EPA under the Clean Water Act.

Industrial Recognition of Hazard - According to handbook used by industry Sax, Dangerous Properties of Industrial Chemicals, petroleum tar is a recognized carcinogen.

2. Phenol

Health Effects - NIOSH lists phenol as a suspected carcinogen. Prolonged exposure to phenol vapors has resulted in human digestive disturbances and skin eruptions(10). Damage to liver and kidneys from this exposure can lead to death.(10) Exposure to phenol can result in chronic and acute poisoning. It can be absorbed into the body by inhalation, ingestion, or through the skin. Phenol is very toxic [oral LD_{50} in rats is 414 mg/kg].(11) Additional information and spe-

cific references on the adverse effects of phenol can be found in Appendix A.

Ecological Effects - Concentrations of phenol as low as 79 mg/l have been reported to be toxic to freshwater minnows[12].

Regulatory Recognition of Hazard - OSHA has set a TLV for phenol at 5 ppm.

Industrial Recognition of Hazard - Phenol is listed as a dangerous disaster hazard, according to the handbook, Dangerous Properties of Industrial Chemicals[10].

IV. References

1. Synthetic Organic Chemicals, United States Production and Sales, 1978. U.S. Trade Commission, Washington, DC
2. U.S. EPA, Survey Reports on Atmospheric Emissions from the Petrochemical Industry, Volume III. EPA 450/337/005C. Research Triangle Park, NC April 1974.
3. Stuewe, C. Emission Control Options for the Synthetic Organic Chemicals Manufacturing Industry, Trip Report - Allied Chemical Corporation, Frankford, PA, EPA Contract No. 68-02-2577, March 1977.
4. U.S. EPA, 1979 Phenol: Ambient Water Quality Criteria (Draft)
5. Baker, E.L. et al. 1978. Phenol Poisoning Due to Contaminated Drinking Water. Archives Env. Health, Mar/Apr pp. 89-94.
6. NIOSH Registry of Toxic Effects of Chemical Substances. U.S. Dept. of health, Educatin, and Welfare. January 1979 p. 370.
7. Pierre, F., J. Robillard, and A. Mouchel: Skin tumors in workers exposed to coal tar. Arch. Mal. Prof. Med. Trav. Secure. Soc. 26:475-82, 1965.
8. U.S. EPA, Cancer Assessment Group, Derivation of the Water Quality Criterion for Polycyclic Aromatic Hydrocarbone, July 1979.
9. Carlton, W. W. Experimental Coal Tar Poisoning in the White Peking Duck. Avian Dis 10:484-502, 1966.
10. Sax, N. Dangerous Properties of Industrial Materials, 1975. 4th Ed. Van Nostrand Reinhold Co., New York, p. 1008.
11. EPA Multimedia Environmental Goals for Environmental Assessment. Volume II. Nov. 1977. EPA-600/7-77-1366.

12. National Academy of Sciences, National Academy of Engineering, Water Quality Criteria 1972. A Report, National Academy of Sciences, Washington, DC EPA-R3-73-033 (1973).

13. Lowenheim and Moran, Faith, Reyes, and Clarks's Industrial Chemicals, 4th ed., John Wiley and Sons, Inc., 1975

14. Industrial Process Profiles for Environmental Use: Chapter 6, The Industrial Organic Chemicals Industry. Ralmond Liepins, Forest Mixon, Charles Hudak, and Terry Parsons, Beb. 1977, EPA - 600/2-77-023f.

15. Section 304(a)(1) Draft Water Quality Criteria Document, Polynuclear Aromatic Hydrocarbons.

16. Dawson, English and Patty. 1980. Physical Chemical Properties of Hazardous Waste Constituents.

HAZARDOUS WASTE BACKGROUND DOCUMENT
PHTHALIC ANHYDRIDE PRODUCTION

Distillation light ends from the production of phthalic anhydride from naphthalene (T).

Distillation bottoms from the production of phthalic anhydride from napthalene (T)

Distillation light ends from the production of phthalic anhydride from ortho-xylene (T).

Distillation bottoms from the production of phthalic anhydride from ortho-xylene (T)

I. Summary of Basis for Listing

The production of phthalic anhydride via vapor phase oxidation of napthalene or ortho-xylene results in the generation of distillation residues which contain carcinogens, suspected carcinogens and toxic organic compounds. The residues of concern are the light ends and bottoms which result from the distillation step in which crude phthalic anhydride is purified. The waste constituents of concern are phthalic anhydride, maleic anhydride, napthoquinones, quinones, and miscellaneous organic compounds composed primarily of polynuclear tarlike materials.

The Administrator has determined that these distillation residues are solid wastes which may pose a substantial present or potential hazard to human health or the environment when improperly transported, treated, stored, disposed of or otherwise managed, and therefore should be subject to appropriate management requirements under Subtitle C of RCRA. This conclusion is based on the following considerations:

(1) The light ends from both processes contain phthalic anhydride and maleic anhydride while the heavy ends from both processes will contain phthalic anhydride and miscellaneous organic compounds composed principally of polynuclear tar-like materials. The heavy bottoms from the napthalene-based process will contain napthoquinones and the heavy bottoms from the ortho-xylene-based process will contain quinones.

(2) Phthalic anhydride, maleic anhydride, napthoquinone, quinones and the tars containing miscellaneous organic compounds are organic toxicants. Napthoquinone and maleic anhydride are animal carcinogens and quinones are suspected carcinogens. The tar-like waste constituents may also contain fused ring components that are potential carcinogens.

(3) More than 16 million pounds of the constituents of concern will be generated annually and require disposal as a result of phthalic anhydride production (assuming plants are operating at production capacity).

(4) Disposal of these wastes in improperly designed or operated landfills could result in substantial hazard via groundwater or surface water exposure pathways. Disposal by incineration, if mismanaged, can result in serious air pollution through release of hazardous vapors, due to incomplete combustion. Transportation of wastes off-site by contract haulers increases the possibility of mismanagement.*

II. Sources of Waste and Typical Disposal Practices

A. Industry Profile

The major use of phthalic anhydride is in the manufacture of plastics, plasticizers, paints and synthetic resins (3). Producers of phthalic anhydride from ortho-xylene or napthalene and the production capacities of these plants are listed in Table 1. About 70% of industry capacity is ortho-xylene-based.

---

*Although no data on the corrosivity of these waste streams are currently available, the Agency believes that phthalic anhydride, maleic anhydride and napthoquinone are highly corrosive materials, and that these waste streams may therefore be corrosive. Under §§261.22 and 262.11, generators of these waste streams are responsible for testing their wastes in order to determine whether they are corrosive.

Table 1. Producers of phthalic anhydride

Producer	Location	Annual Capacity (Millions of Pounds)	Raw Material
Allied Chem. Corp.			
Specialty Chems. Div.	El Segundo, Calif.	36	o-xylene
BASF Wyandotta Corp.			
Colors and Intermediate Group			
Intermediates Div.	Kearny, N.J.	150	o-xylene
Exxon Corp.			
Exxon Chem. Co., div.			
Exxon Chem. Co. U.S.A.	Baton Rouge, La.	130	o-xylene
Koppers Co., Inc.			
Organic Materials Group	Bridgeville, Pa.	90	Desulfurized coal-tar naphthalene
	Cicero, Ill.	235	o-xylene or naphthalene
Monsanto Co.			
Monsanto Chem. Intermediates Co.	Bridgeport, N.J.	85	Petroleum naphthalene
	Texas City, Tex.	150	o-xylene
Occidental Petroleum Corp.			
Hooker Chem. Corp., subsid.			
Hooker Chems. and Plastics Corp. subsid.			
Puerto Rico Chem. Co., subsid.	Arecibo, P.R.	87	o-xylene
Standard Oil Co. of California			
Chevron Chem. Co., subsid.			
Petrochem. Div.	Richmond, Calif.	50	o-xylene
Stepan Chem. Co.			
Surfactant Dept.	Millsdale, Ill.	100	o-xylene
United States Steel Corp.			
USS Chems., div.	Neville Island, Pa.	205	Desulfurized coal tar naphthalene
	TOTAL	1318	

Source: Reference 1

Manufacturing Process

Phthalic anhydride is manufactured by the vapor phase oxidation of ortho-xylene or napthalene (see Figures 1 and 2 for flow diagrams). The primary napthalene-based processes use fluidized bed reactors. All xylene-based processes incorporate tubular fixed bed reactors. Except for the reactors and catalyst handling and recovery facilities required for the fluid unit, these vapor phase processes are similar (3). The two basic reactions are as follows:

Napthalene-based

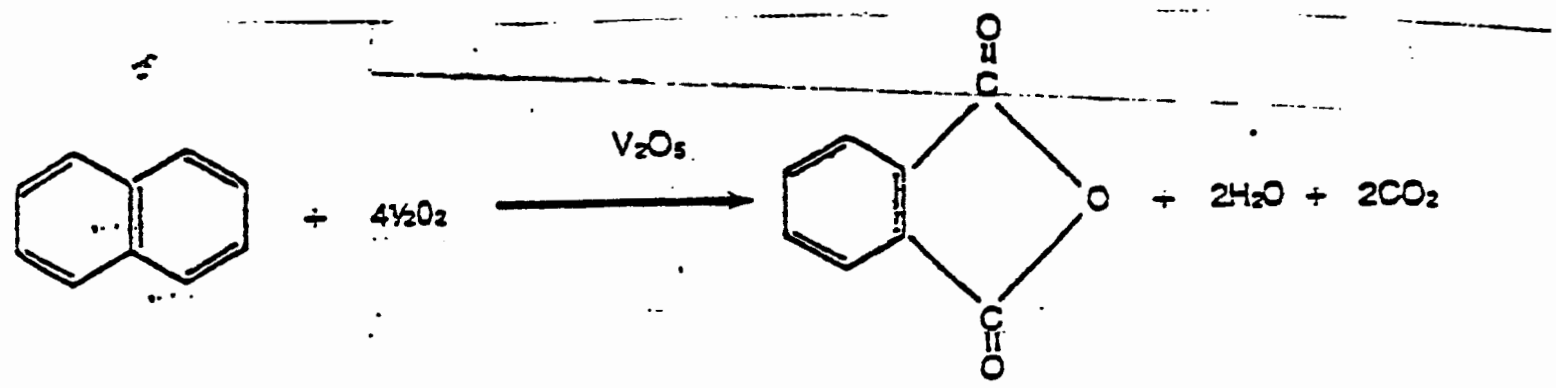

Ortho-xylene based

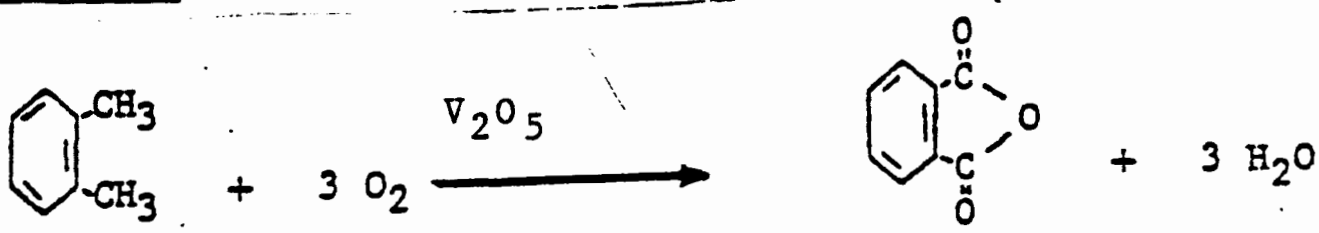

O-xylene Oxygen Phthalic Anhydride (PAN) Water

In the napthalene-based process, napthalene is introduced into a fluidized bed reactor near the catalyst bed. In the xylene-based process, o-xylene is mixed with air and introduced into a fixed bed tubular reactor (in which the catalyst is contained in the tubes). Both processes typically use a vanadium pentoxide catalyst (3).

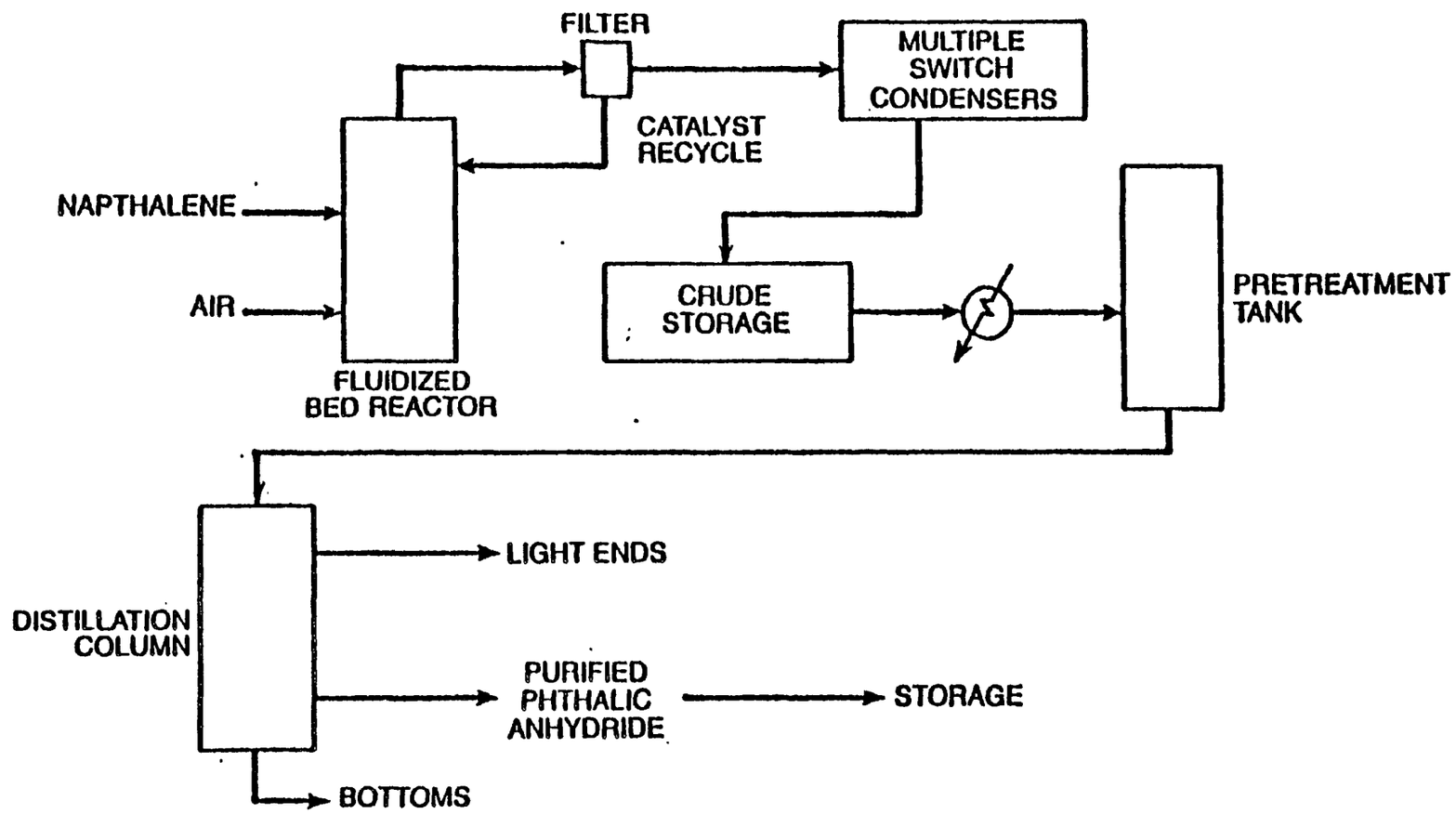

Figure 1. PHTHALIC ANHYDRIDE PRODUCTION FROM NAPHTHALENE
Source: Reference 3

Figure 2. Phthalic Anhydride Production from Ortho Xylene

(Source: reference 3)

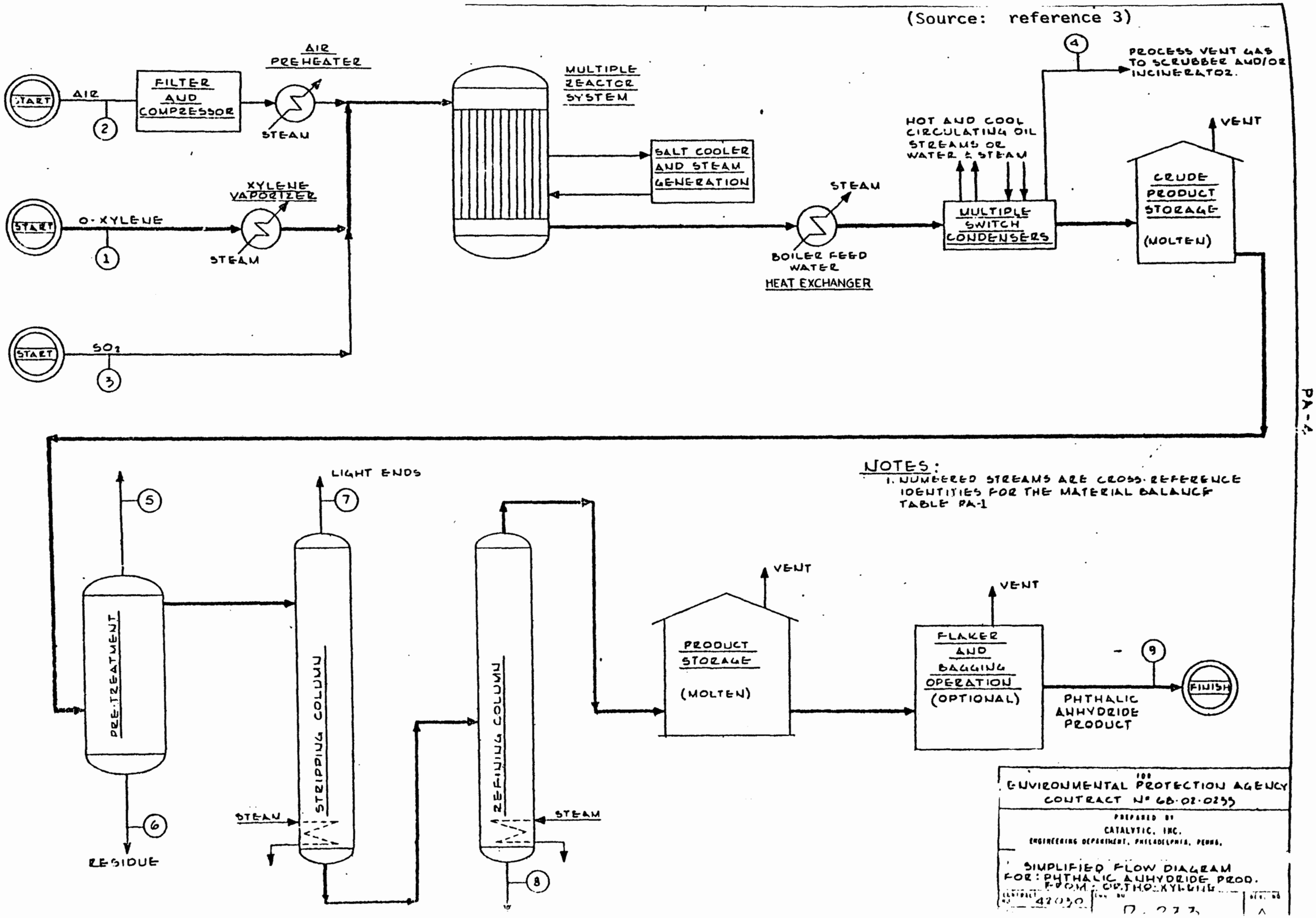

The reactor effluent from both processes will contain phthalic anhydride, maleic anhydride*, and miscellaneous organics (including fused-ring compounds). The ortho-xylene-based process will generate quinones as part of its waste stream. The napthalene-based process will generate napthoquinones.(3)

Crude phthalic anhydride is condensed by passing through a series of switch condensers. (The condenser effluent gases are normally water scrubbed and/or sent to an incinerator before being released to the atmosphere.) As part of the purification process, the crude product is first distilled to remove light ends. The stripped crude phthalic anhydride is then distilled in a second column where heavy bottoms will remain once the pure product is removed.(3) These distillation residues are the waste streams of concern.

II. Waste Generation and Management

Some actual plant data describing light ends and bottoms generation are available. One napthalene-based plant, with a published production capacity of 125 million pounds/year phthalic anhydride, reported to dispose of 58,000 pounds/month light ends and 400,000 pounds/month bottoms. This plant had these wastes hauled off-site by a contractor (3), probably for disposal by landfill.

A second napthalene-based plant, with nominal capacity of 90 million pounds/year, reported a combined total waste

*Process chemistry indicates that maleic anhydride will be present in lower concentrations in the effluent generated from ortho-xylene-based phthalic anhydride production.

load of 45,000 pounds/month. This plant utilized an on-site landfill for solid waste disposal.(3)

One plant using ortho-xylene as a raw material reported a light and heavy ends generation rate of 0.02 tons/ton of phthalic anhydride produced. Another ortho-xylene plant reported that it generated 0.002 tons of distillation bottoms per ton of phthalic anhydride produced. Both plants reported that these wastes are sent off-site for disposal(3).

Based on typical material balance data(3)*, it can be estimated that the following amounts of the constituents of concern will be contained in the distillation residues generated as a result of total phthalic anhydride production (assuming all plants are operating at production capacity):

Constituent	Amount from xylene-based production (million lbs./yr.)		Amount from Napthalene-based (million lbs./yr.)	
	light ends	heavy bottoms	light ends	heavy bottoms
phthalic anhydride	>4.9	>0.9	>0.2	>2.5
maleic anhydride	**		>1.9	
quinones		***		
napthoquinone				>2.5
misc. Org. (as tars)		>1.1		>2.0

*Estimates based on typical material balance data for average plants producing 130 million lbs./yr of phthalic anhydride from ortho-xylene and from napthalene. Source: reference 3.
**Process chemistry indicates that maleic anhydride will be present in lower concentrations in the light ends generated from phthalic anhydride production from ortho-xylene than from napthalene, due to the nature of the basic chemical reactions.
***Although no data are currently available on the concentrations of quinones in the bottoms from ortho-xylene-based production of phthalic anhydride, process chemistry indicates that quinones will be present in this waste stream, due to the oxidation of para-hydrogens on the xylene molecules.

Disposal practices for distillation residues will vary. Light ends, either in a vapor or liquid state, are usually incinerated. However, as noted above, one plant reported having this waste, along with the heavy ends, hauled off-site by a contractor[3], probably to a landfill disposal site. Distillation bottoms may also be incinerated, but are typically disposed of in landfills either on or off-site.[3]

III. Discussion of Basis for Listing

A. Hazards Posed by the Waste

As noted above, distillation residues (light ends and heavy bottoms) from phthalic anhydride production contain the following components as they are discharged from the plant distillation units:

Phthalic anhydride
Maleic anhydride *>
Quinones
Napthoquinones
Miscellaneous polynuclear organic compounds in distillation tars

All of the above waste constituents are toxic. Napthoquinone and maleic anhydride are demonstrated carcinogens, and quinones are suspected carcinogens. The miscellaneous organic component of this waste has not been chemically characterized but is composed principally of tar-like materials probably including fused-ring compounds that are potential carcinogens.

---

*Maleic anhydride, while an animal carcinogen, hydrolizes and photolyses rapidly to non-toxic maleic acid and thus is not expected to pose a hazard via a water or air exposure pathway. It may, however, prove hazardous during waste transport to off-site disposal.

These waste constituents appear capable of migration, mobility and persistence if mismanaged, creating the potential for substantial hazard in light of the dangers associated with contact with the waste constituents. As previously noted, disposal of these wastes may be by incineration, on-site landfilling, or off-site disposal (probably a landfill). Improper design and management of land disposal facilities could lead to the release of hazardous constituents and pose a hazard via a groundwater exposure pathway. Some of the waste constituents have in fact proved capable of migration, mobility and persistence via this pathway. Various quinones have been identified in rivers, wells, groundwater, effluent from landfill leachate, and in finished drinking water. Phthalic anhydride has been identified in finished drinking water.(14)

Napthaquinones and quinones are relatively soluble (about 200 mg/l), and thus may also migrate from the matrix of the waste.

Disposal by incineration, if mismanaged, can present a health hazard via an air inhalation pathway. Incomplete combustion of the distillation residues from phthalic anhydride production can result in the formation of various phthalate esters which will be released from the incinerator into the air. (These esters would be formed from the reaction of phthalic acid with alcohols.) Certain phthalates have shown mutagenic effects. Phthalates have also been shown to produce teratogenic effects in rats. Chronic toxicity includes toxic

polyneuritis in workers exposed primarily to dibutyl phthalate (see Appendix A). Further information on incinerator emission content is solicited by the Agency.

Contract hauling, in particular, presents an additional potential for mismanagement in the transportation and handling operations. Transportation of these wastes off-site, if not properly managed, increases the likelihood of their causing harm to human health and the environment. The mismanagement of wastes during transportation thus may result in hazard to human health and wildlife through direct exposure to the harmful constituents listed above (either by direct contact with the waste or through wind-carried particulate matter and vapors). Furthermore, absent proper management safeguards, the wastes might not reach the designated destination at all, thus making them available to do harm elsewhere. It should be noted that maleic anhydride, which is not otherwise a constituent of concern due to its lack of persistence, could prove hazardous during transport and handling, since the possibility of immediate exposure exists.

The large quantity of waste generated and requiring disposal is another factor which increases the likelihood of exposure to the harmful constituents in the waste via the various exposure pathways. Should the large amounts of waste constituents exposed to leaching activity be released as a result of mismanagement, large areas of ground and surface waters may be affected. Contamination could also occur for long periods of time, since large amounts of pollutants are available for environmental loading.

Attenuative capacity of the environment surrounding the disposal facility could also be reduced or used up due to the large quantities of pollutants available over long periods of time. All of these considerations, in the Agency's view, strongly support a hazardous waste listing.

B. Health and Ecological Effects

1. Maleic Anhydride

Health Effects - Maleic anhydride can produce cancers following subcutaneous injections in rats.(5) Maleic anhydride is also highly toxic [ORAL rat LD50 = 481 mg/Kg] and is known to cause acute irritation of the eyes, skin and upper respiratory tract. There is also evidence that this compound may cause reproductive impairment in male rats (4). Additional information and specific references on the adverse health effects of maleic anhydride can be found in Appendix A.

Regulations - OSHA has set a standard for air of TWA=0.25 ppm for an 8-hour day.

Industrial Recognition of Hazard - In Sax, Dangerous Properties of Industrial Materials, Maleic anhydride is designated as highly toxic by ingestion, and also as an irritant. Fassett and Irish in Industrial Hygiene and Toxicology state that maleic anhydride can produce severe eye and skin burns. Plunkett, in his Handbook of Industrial Toxicology designates maleic anhydride as a causal agent of severe eye and skin burns.

2. Phthalic Anhydride

Health Effects - There is evidence that phthalic anhydride may act as a teratogen in chick embryos[6]. It is a potent irritant of the skin, eyes, and upper respiratory tract. Exposure has been reported to produce progressive respiratory damage, including fibroses of the lungs[8,9]. In addition, degeneration of liver, kidney and myocardium occured[6]. There is also evidence that this compound may cause reproductive impairment in male rats[4]. Additional information and specific references on the adverse effects of phthalic anhydride can be found in Appendix A.

Regulations - OSHA has set a TWA for an 8-hour exposure at 2 ppm.

Industrial Recognition of Hazard - Sax (Dangerous Properties of Industrial Materials) lists phthalic anhydride as having a moderate toxic hazard rating via oral routes.

3. Napthoquinone

Health Effects - Napthoquinone has been demonstrated to be a carcinogen when applied to the skin of test animals[5]. This chemical is extremely irritating to the skin, mucous membranes and respiratory tract. It can cause skin and pulmonary sensitization resulting in asthmatic and allergic responses. Changes in the blood that reduce its oxygen carrying capacity have also been demonstrated following naphthoquinone exposure which may develop into hemolytic anemia. Naphtoquinone is also suspected of causing adverse reproductive effects. Additional

information and specific references on the adverse effects of napthoquinone can be found in Appendix A.

Ecological Effects - Napthoquinone, at a concentration of 1.0 mg/l will cause death within 3 hours for bluegill and trout, and 14 hours for larval lamprey (10).

Industrial Recognition of Hazard - Naphthoquinone is designated in Sax's Dangerous Properties of Industrial Materials as a moderately toxic irritant to skin, eyes, and the upper respiratory tract.

4. Quinone - (p-Bezoquinone; 1,4-Benzoquinone)

Health Effects - Quinones are highly toxic [Oral rat LD50=120 mg/Kg]. Quinone has been reported to produce neoplasms but upon review by the International Agency for Research on Cancer it was determined that there was insufficient data to conclude that it was a carcinogen.(11) Upon exposure local changes in humans may include discoloration, severe irritation, erythemia, swelling, and the formation of papules and vesicles. Prolonged contact may lead to necrosis.(12) Vapors condensing upon the eyes are capable of inducing serious disturbances of vision. Ulceration of the cornea has resulted from one brief exposure to a high concentration of the vapor of quinone, as well as from repeated exposures to moderately high concentrations.(12)

Regulations - Threshold limit values have been established in air for quinone in the United States at a concentration of 0.1 ppm, and the U.S.S.R. at a concentration of 0.01 ppm.(13)

Industrial Recognition of Hazard - Quinone is designated in Sax's Dangerous Properties of Industrial Materials as highly toxic via oral and inhalation routes.

5. Tars

Health Effects - Tar-like material containing quinones and asphalt materials must be considered suspect carcinogens based on the data available on chemical tars. (NIOSH Criteria for Recommended Standard for Occupational Exposure to Coal Tar Products.) Considering the highly reactive nature of maleic anhydride, various toxic effects such as skin and respiratory tract irritation and sensitization would also be expected from tars containing this material.

Industrial Recognition of Hazard - Sax's Dangerous Properties of Industrial Materials designates dehydrated and liquid tars as highly toxic skin and respiratory irritants when exposure is of long duration. Tar dusts are designated as moderate skin and eye irritants upon acute exposure.

IV. References

1. SRI International, Directory of Chemical Producers - United States, Menlo Park, California, 1979.

2. U.S. Environmental Protection Agency, Source Assessment: Phthalic Anhydride (Air Emissions), EPA-600/2076-032d, Washington, D.C., December, 1976.

3. U.S. Environmental Protection Agency, Office of Air Quality Planning and Standards, Engineering and Cost Study of Air Pollution Control for the Petrochemical Industry, Volume 7: Phthalic Anhydride Manufacture from Ortho-Xylene, EPA-450/3-73-006g, Research Triangle Park, North Carolina, July, 1975. PB 245 277

4. Protsenko, E.I., 1970. Gonadotropic Action of Phthalic Anhydride. Gig. Sanit. 35:105.

5. NIOSH, Registry of Toxic Effects of Chemical Substances, 1979. GPO.

6. Preliminary Environmental Hazard Assessment of Chlorinated Naphthalenes, Silicones, Flourocarbons, Benzenephlycarboxylates and Chloraphearls, Syracuse University Research Corporation, EPA Report PB-238-074, 1973.

7. American Conference of Governmental Industrial Hygienists, 1971. Documentation of Threshold Limit Values for Substances in Workroom Air. 3rd Edition, pg. 263.

8. Markman and Savinkina, 1964. The Condition of the Lungs of Workers in Phthalic Anhydride Production (an X-ray study). Kemerovo 35.

9. Plunkett, E.R., Handbook of Industrial Toxicology, pg. 338.

10. Applegate, V.C., J.H. Howell, and A.E. Hall, Jr. 1957. Toxicity of 4,346 chemicals to larval lampreys and fishes. Department of Interior, Special Scientific Report Number 207.

11. IARC Monographs on the Evaluation of Carcinogenic Risk of Chemicals to Man, Vol. 15. World Health Organization. (1977).

12. Patty, F.A. (editor). Industrial Hygien and Toxicology. Second Revised Edition. Interscience Publishers. New York 1967.

13. Verschueren, Karel. Handbook of Environmental Data on Organic Chemicals. Van Nostrond Reinhild Co., New York. 1977.

14. Shackelford and Keith, Frequency of Organic Compounds Identified in Water, EPA-600/4-76-062, Environmental Research Laboratory, Athens, Ga., Dec. '76.

LISTING BACKGROUND DOCUMENT

NITROBENZENE PRODUCTION

Distillation bottoms from the production of nitrobenzene by the nitration of benzene (T)

I. Summary of Basis for Listing

Distillation bottoms from the production of purified nitrobenzene by the nitration of benzene contain carcinogenic, mutagenic, and toxic organic substances. These include meta-dinitrobenzene and 2,4-dinitrotoluene as the pollutants of concern.

The Administrator has determined that the distillation bottoms from nitrobenzene production by the nitration of benzene may pose a substantial present or potential hazard to human health or the environment when improperly transported, treated, stored, disposed of or otherwise mismanaged, and therefore should be subject to appropriate management requirements under Subtitle C of RCRA. This conclusion is based on the following considerations:

1) The waste contains meta-dinitrobenzene which is extremely toxic and 2,4-dinitrotoluene, a carcinogen and mutagen.

2) The distillation bottoms from the distillation of nitrobenzene are currently disposed of in drums in private landfills. However, these drums have a limited life-time and eventual rupture is likely. When this occurs, the potential for ground water contamination is high if the landfill is not properly designed or operated. Such nitrobenzene accidents have actually occurred.

3) The wastes in this stream biodegrade very slowly, thereby increasing the chances for exposure and posing a risk to humans.

II. Sources of Waste and Typical Disposal Practices

A. Profile of the Industry

The major use of nitrobenzene ($C_6H_5NO_2$) (about 97%) is as an intermediate in the manufacture of aniline dyes.[1] The balance is purified for use chiefly as a solvent or in the manufac-

ture of pharmaceuticals. Nitrobenzene is manufactured in seven plants, all located in the eastern and southern regions of the U.S. Table 1 lists these plants and their production capacities.

TABLE 1. Nitrobenzene Producer Locations and Production Capacities[2]

Company	Facility	1978 Production Capacity (Gg)*
American Cyanamid Co. Organic Chems Div.	Bound Brook, NJ	48
E.I. DuPont deNemours & Co., Inc.	Willow Island, WV	33
Chems. Dyes and Pigments Dept.	Beaumont, TX	140
Indust. Chems. Dept.	Gibbstown, NJ	90
First Mississippi Corp. First Chem. Corp., Subsid.	Pascagoula, MS	151
Mobay Chem. Corp. Polyurethane Div.	New Martinsville, WV	61
Rubicon Chems., Inc.	Geismar, LA	34
	TOTAL	557**

*Gg = billion grams or 1000 metric tons (mt).
mt = 2,200 pounds.

**The 1978 U.S. production of nitrobenzene by the nitration of benzene was 260 (10^3) mt.[2]

The production of nitrobenzene has been fairly stable and can be expected to grow in relation to the growth in demand for aniline production that requires nitrobenzene as a feedstock.

Based on a total nitrobenzene production of 260 Gg/yr (286,000 tons), the amount of nitrobenzene subject to purification by distillation is 3% of production, or 7.8 Gg/yr (8580 tons).[22]

B. Manufacturing Process [21]

Nitrobenzene is made by the direct nitration of benzene using a sulfuric-nitric acid mixture (Fig. 1). Commercial specification for the benzene raw material is:

Benzene	99.8%
Toluene	0.1% Maximum
Saturated hydrocarbons	0.1% Maximum
Thiophene	1 ppm

Benzene is added to a slight excess of the sulfuric-nitric acid mixture (53-60% sulfuric acid; 32-39% nitric acid; 8% water; a stochiometric excess of nitric acid is used) slowly with agitation and heat removal. The reaction residence time is 2-4 hours. At the end of this time, the mixture is allowed to settle and the crude nitrobenzene is withdrawn; the separated, mixed acids (mostly sulfuric) are then sent to acid recovery and reused. The small amount of organic material contained in this stream is recovered from the acid concentration plant and recycled. The crude nitrobenzene is first washed with dilute sodium carbonate solution to neutralize acids, then distilled. The nitrobenzene is recovered as an overhead product. Distillation bottoms, the listed waste stream, are then disposed of as waste.

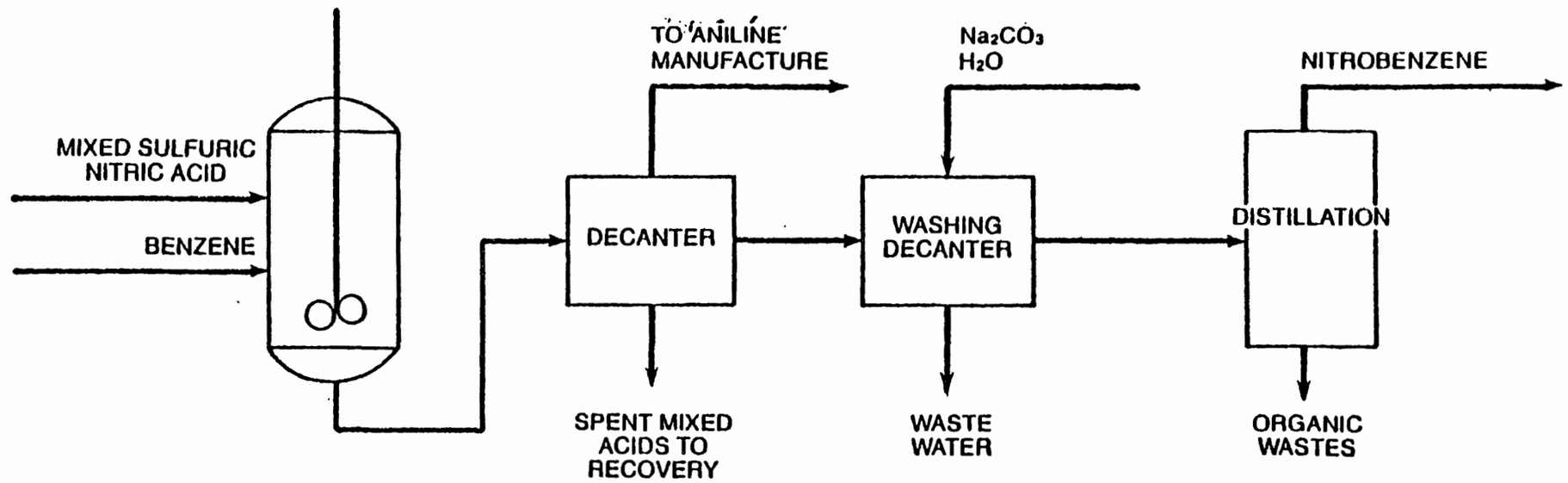

Figure 1. FLOW DIAGRAM NITRATION OF BENZENE

(Modified from (21))

C. Waste Generation and Management

The distillation bottoms are deemed to consist primarily of nitrobenzene, meta-dinitrobenzene, and 2,4-dinitrotoluene. Meta-dinitrobenzene and 2,4-dinitrotoluene are the waste constituents of concern.

2,4-Dinitrotoluene is predicted to be present from the nitration of impurities in feedstock benzene, chiefly toluene (0.1%) and paraffinic hydrocarbons of the C_6 to C_8 range (0.1%). (See p. 3, above).

Meta-dinitrobenzene is predicted to result from the dinitration of benzene feedstock. Based upon reaction and equilibrium chemistry, it is estimated that approximately 2-3% of the benzene feedstock will produce dinitrobenzene.

The potential amounts of carcinogenic and/or toxic chemicals that will be in the waste from the distillation of 7.8 Gg/yr of crude nitrobenzene (p. 3) are estimated to be:

meta-dinitrobenzene	156-195 mt/yr
2,4-dinitrotoluene	10 mt/yr
Total	166-205 mt/yr*

The usual disposal method of the subject distillation bottoms that cannot be recovered or used directly as a chemical intermediate is disposal in drums in private landfills.[3]

*These estimates assume that all contaminants will be separated from the product by distillation, and consequently will all be present in the waste.

III. Discussion of Basis for Listing

A. Hazards Posed by Waste

As stated above, the constituents of concern in this waste are meta-dinitrobenzene, an acutely toxic compound, and 2-4-dinitrobenzene, a carcinogen and mutagen. Both of these constituents are estimated to be present in substantial concentrations, and to be generated in large quantities annually. This information itself is sufficient to warrant hazardous waste listing, in light of the danger posed by the waste constituents*, unless it can be demonstrated that the waste constituents will not migrate and come in contact with environmental receptors.

No such assurance appears possible, as both waste constituents are projected to have migratory potential and to be mobile and persistent in ground and surface water (App. B), so that they can create a substantial hazard if disposal landfills are not properly designed and operated. Thus, meta-dinitrobenzene, which is highly water soluble (3000 ppm), can migrate without degradation through unsaturated sandy soils, and resist degradation in ground and surface waters (App. B).** 2,4-Dinitrotoluene is also highly soluble (2000 ppm in water), and has been demonstrated to migrate through unsaturated sandy soil, and to be persistent in the environment. (App B).

---

*For example, it is Agency policy that there is no safe exposure level for carcinogens, i.e., a single dose in any concentration being sufficient to cause cancer in some part of the exposed population.

**For example, meta-dinitrobenzene has been demonstrated to be only slowly biodegradable in a synthetically prepared sewage effluent.[4,5,6]

If the wastes are landfilled, even in plastic-lined drums, they create a potential hazard. All drums have a limited life span, for the exterior metal corrodes in the presence of even small amounts of moisture. When this occurs the potential for groundwater contamination is high if the landfill is not properly designed or operated. It should be noted that all of the subject production facilities are located in regions of significant rainfall (Gulf Coast, NJ, WV), so that ample percolating liquid is available for leachate formation. (In any case, there is no reason to believe that wastes will be containerized at all, since, absent Subtitle C regulation, wastes could be landfilled in a variety of improper ways.)

Nitrobenzenes have in fact migrated from landfills, persisted in and contaminated groundwater in actual waste management practice. Nitrobenzenes and other wastes from a Monsanto Chemical dump migrated into and caused contamination of groundwater in E. St. Louis, Illinois.* At the La Bounty dump along the Cedar River in Charles City, Iowa, 130,000 kg of nitrobenzenes were disposed of along with several other chemicals. Groundwater collected between the La Bounty dump and the Cedar River contained considerable concentrations of the chemicals including nitrobenzenes.*

These waste constituents, therefore, are capable of migrating from improperly designed and operated landfills, and reaching environmental receptors. Drumming of these wastes, as occurs in actual prac-

*OSW Hazardous Waste Division, Hazardous Waste Incidents, Unpublished, Open File, 1978.

tice, is not an adequate precaution as demonstrated by the Love Canal incident, among others.

These wastes may also create a substantial hazard via a surface water exposure pathway. Should the disposal site be flooded and the wastes come into contact with the surface water, the nitrobenzenes and nitrotoluenes will resist evaporation due to their weight relative to air and their low vapor pressure. As they are also soluble and only slowly degradable (App. B), they have the potential for widespread exposure should surface waters become contaminated.

B. Health and Ecological Effects

1. Meta-dinitrobenzene

Health Effects - Meta-dinitrobenzene is extremely toxic [LD_{50} rat 30mg/Kg.] acting as a potent methemoglobin-forming agent, i.e., an agent that reduces the oxygen-carrying capacity of the blood, a condition that can rapidly lead to death.(7) Meta-dinitrobenzene can also cause liver damage, serious visual disturbances, and severe anemia, as well as a variety of central nervous system and gastrointestinal symptoms.(7)(8) Meta-dinitrobenzene can be stored in body fat. Exposure to sunlight or ingestion of alcohol may potentiate or increase the adverse effects of poisoning.(7) Meta-dinitrobenzene is designated as a priority pollutant under Section 307(a) of the CWA. Additional information on the adverse effects of meta-dinitrobenzene can be found in Appendix A.

Ecological Effects - Concentrations of from 2 to 12 mg/l of unspecified isomers of dinitrobenzene have been reported lethal to fish.(9)(10) Meta-dinitrobenzene has been shown to inhibt photosynthesis in algae.(11)

Regulatory Recognition of Hazard - OSHA has set the TWA for dinitrobenzene at 0.15 ppm. Dinitrobenzene is regulated by the Office of Water and Waste Management of EPA under the Clean Water Act, Section 311. Technical assistance has been requested to obtain data on environmental effects, high-volume production, and spill reports.

Industrial Recognition of Hazard - According to handbooks used by industry such as, Sax, Dangerous Properties of Industrial Chemicals,[12] the oral toxic hazard rating is high for dinitrobenzene. When heated, it is dangerous, decomposing to emit toxic fumes; it is also an explosion hazard. According to Plunkett, Handbook of Industrial Toxicology, [8] M-dinitrobenzene is extremely toxic by oral, inhalation, and percutaneous routes. According to Patty, Industrial Toxicology, [13] m-dinitrobenzene is highly toxic.

2. 2,4-Dinitrotoluene

Health Effects This compound has been shown to be a carcinogen[14][15] and a mutagen.[16,17] 2,4-Dinitrotoluene also causes a decrease in sperm production and atrophy of the testes.[14,15]

2,4-Dinitrotoluene is very toxic [LD_{50} (rat) - 268 mg/Kg]. Effects of exposure include methemoglobinemia followed by cyanosis, liver damage, anemia and other abnormalities of the blood and effects on the central nervous system and digestive tract. Dinitrotoluene is also an irritant and an allergen. Alcohol produces a synergistic or aggravated effect on the toxicity.[18,19] 2,4-Dinitrotoluene is designated as a priority pollutant under Section 307(a) of the CWA. Additional information on the adverse effects of 2,4-dinitrotoluene can be found in Appendix A.

Ecological Effects - An aquatic toxicity for 2,4-dinitrotoluene of 10-100 ppm has been established[20].

Regulatory Recognition of Hazard OSHA has set the TWA for 2,4-dinitrotoluene in air at 1500 micro-g/m^3 (skin).

Industrial Recognition of Hazard - According to handbooks used by industry, such as Sax, Dangerous Properties of Industrial Materials[12], the oral toxic hazard rating for 2,4-dinitrotoluene is very high.

IV. References

1. Gruber, G.I. Assessment of Industrial Hazardous Waste Practices, Organic Chemicals, Pesticides, and Explosive Industries. EPA/530/SW-118C TRW Systems Group, Redondo Beach, California, January, 1976.
2. Directory of Chemical Producers, 1979. Stanford Research Institute.
3. Recommended Methods of Reduction, Neutralization, Recovery, or Disposal of Hazardous Wastes, Volume XI: Industrial and Mimicipal Disposal Candidate Waste Stream Constituent Profile Reports, Organic Compounds (continued) EPA 670/2-73-053-k, TRW Systems Group, August 1973.
4. Bernhard, E.L. and G.R. Campbell, "The Effects of Chlorination on Selected Organic Chemicals," U.S. Environmental Protection Agency, PB-211-160, NTIS, Springfield, Virginia, 1972.
5. G. Bringmann and R. Kuehn, "Biological Decomposition of Nitrotoluenes and Nitrobenzenes by Azotobacter agilis," Gesundh. Ing. 92(9):273-276 1971.
6. L.A. Allen, "the Effect of Nitro-Compounds and Some Other Substances on Production of Hydrogen Sulphide by Sulphate-Reducing Bacteria in Sewage," Proc. Soc. Appl. Bact. (2):26-38, 1949.
7. U.S. EPA, 1976, Investigation of Selected Potential Environmental Contaminants: Nitroaromatics.
8. Plunkett, E.R., Handbook of Industrial Toxicology.
9. McKee and Wolf. 1963. Water Quality Criteria. The Resource Agency of California State Water Quality Control Board Publication No. 3-4.

10. Meinck, et al. 1956. Industrial Waste Water, 2nd Edition, Gustav fisher Verlag Stugart, p. 536.

11. Howard, et al. 1976. Investigation of Selected Potential Environmental Contaminants: Nitroaromatics, Syracuse Research Corporation, TR 76-573.

12. Sax, N. Irving, Dangerous Properties of Industrial Materials, Fourth Edition, New York, Van Nostrant Reinhold Company, 1975.

13. Patty, Frank A. Industrial Hygiene and Toxicology. G.D. Clayton and F.E. Clayton, (Eds.) Third Revision. NY, Wiley Publications, 1978.

14. Purchase, I.F.H., et al. An Evaluation of 6 Short-Term Tests for Detecting Organic Chemical Carcinogens. Br. J. Cancer 37:873-958 (1978).

15. National Cancer Institute. Bioassay of 2,4-dinitrotoluene for Possible Carcinogenicity. U.S. Department of Health, Education and Welfare, Public Health Service, National Institute of Health, 1978.

16. Won, W.D., et al. Mutagenicity Studies on 2,4-dinitrotoluene. Mutation Research 38:387 (1976).

17. Hodgson, J.R., et al. Mutagenicity Studies on 2,4-dinitrotoluene. Mutation Research 38:387 (1976).

18. Friedlander, A. 1900. On the clinical picture of poisoning with benzene and toluene derivatives with special reference to the so-called anilinism. Neurol. Centrlbl. 19: 155.

19. McGee, L.C., et al. 1942. Metabolic disturbances in workers exposed to dinitrotoluene. Am. Jour. Dig. Dis. 9: 329.

20. NIOSH, Registry of Toxic Effects of Chemical Substances, 1976 Edition.

21. Lowenheim and Moran, Faith, Keyes and Clark's Industrial Chemicals, 4th ed., New York, 1975.

22. Synthetic Organic Chemicals U.S. Production and Sale, U.S. International Tariff Commission, 1978.

LISTING BACKGROUND DOCUMENT

METHYL ETHYL PYRIDINE PRODUCTION

Stripping Still Tails from the Production of Methyl Ethyl Pyridine (T)

I. SUMMARY OF BASIS FOR LISTING

This waste consists of the stripping still tails generated in the production of methyl ethyl pyridine. The waste is expected to contain toxic organic materials -- paraldehyde, pyridine(s), and picoline(s) -- based on a review of the process involved. The Administrator has determined that this is a solid waste which may pose a substantial present or potential hazard to human health or the environment when improperly transported, treated, stored, disposed of or otherwise managed, and therefore should be subject to management controls under Subtitle C of RCRA. This conclusion is based on the following considerations:

1) The waste is expected to contain the following toxic organic chemicals: paraldehyde, pyridines, and picolines. Paraldehyde is included on the NIOSH list of suspected carcinogens. The constituents also exhibit human and aquatic toxicity.

2) The constituents in the waste could migrate to groundwater by leaching from improperly managed lagoons or landfills, due to their high solubilities. Release to the atmosphere is also probable due to the high volatility of these compounds; volatization poses the risk of direct inhalation of these toxic organic chemicals.

3) An appreciable amount of the waste is produced (calculated to be 720 metric tons in 1973). Approximately 75% of the total generated is paraldehyde.

II. INDUSTRY AND PROCESS DESCRIPTION

A. Profile of the Industry

Methyl ethyl pyridine (MEP) is a cyclic intermediate produced commercially by synthesis. Only limited information is available from which to draw an industry profile. A 1976 study[1] indicated that the 1973 U.S. production capacity was about 18,000 metric tons (40 million pounds). A more recent statistical review of the cyclic intermediates industry[2] does not include methyl ethyl pyridine among the cyclic intermediates for which production and sales data are available.

The TRW study [1] identified Union Carbide as a major producer of 2-methyl-5-ethyl pyridine (Diagram I, p. 3). This appears to be the isomer of major commercial importance.[1,3] Koppers Company, Inc., Nepara Chemical Company, Inc., and Reilly Tar and Chemical were cited as other producers. Chem Sources-USA, 1980 edition[4] lists RIT-Chem Company, Inc. as a producer of 4-methyl-3-ethyl pryridine.

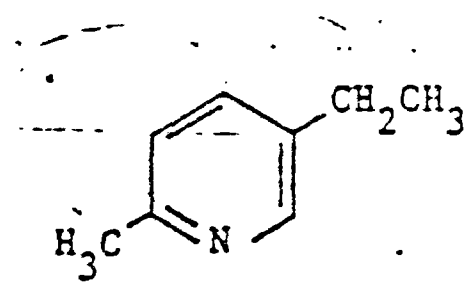

(I)

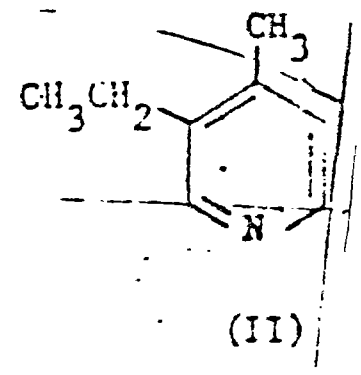

(II)

No important commercial end uses of MEP have been identified.[3,5] 2-Methyl-5-ethyl pyridine is a raw material used for the industrial production of nicotinic acid (3-pyridien-3-carboxylic acid) by

nitric acid oxidation and decarboxylation.[3] It is also a precursor for 2-methyl-5-vinyl pyridine (MVP), which is used in acrylic fiber manufacture and in some styrene/butadine polymer formulations. Producers of MEP end products identified in Chem Sources-USA[4] are Vitamins, Inc. (nicotinic acid) and Philips Chemical Company (methyl vinyl pyridine).

B. Manufacturing Process

Methyl ethyl pyridine is among the pyridine bases that are produced commercially by synthesis (1,3,5), rather than by isolation from coal tar.

Figure 1 is the process diagram for MEP production. In the initial steps of MEP production, paraldehyde is usually generated at the plant site by reacting acetaldehyde with sulfuric acid to produce crude paraldehyde. A portion of the crude paraldehyde is used in the production of MEP, while the remaining portion is used for the production of refined paraldehyde. The batch still tails from paraldehyde production are sent to a wastewater treatment sytem.*

*This waste stream is sent, along with the listed waste stream, to a lagoon. At this time, data is not available on the constituents in this waste stream. However, since the waste stream is mixed with the listed waste stream, the resulting mixture is defined by the Agency as being a hazardous waste, unless generators demonstrate otherwise.

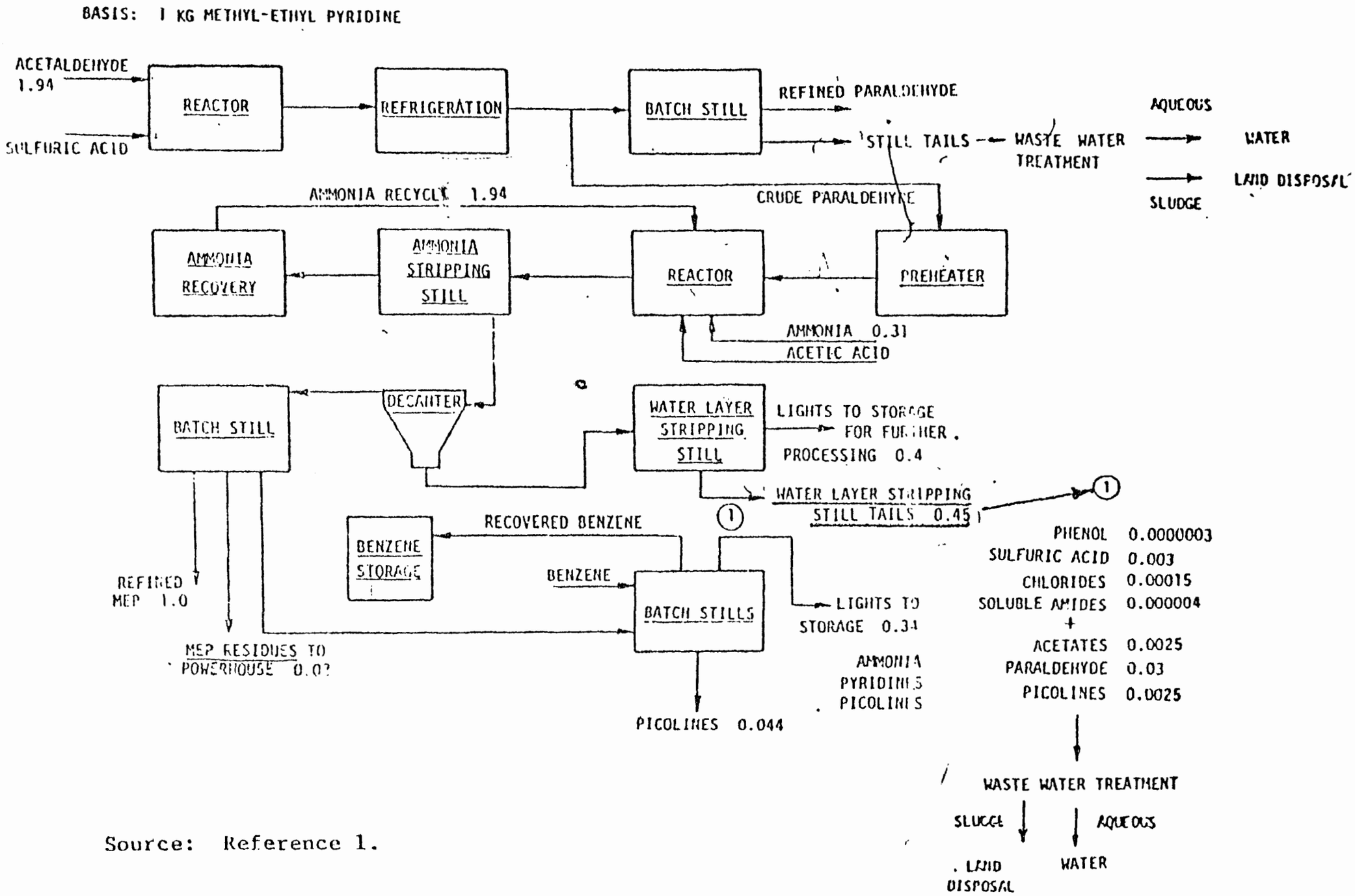

Source: Reference 1.

Figure 1: Pyridines (2-Methyl, 5-Ethyl Pyridine and α-Picoline) Manufacture

After the production of the crude paraldehyde, 2-methyl-5-ethyl pyridine is synthesized in high yield from the liquid phase reaction of paraldehyde and ammonia acetate, aluminum ozide, ammonium fluoride or cobalt chloride cayalyst.(3) This process which takes place in the reactor is shown by equation (1).(1)

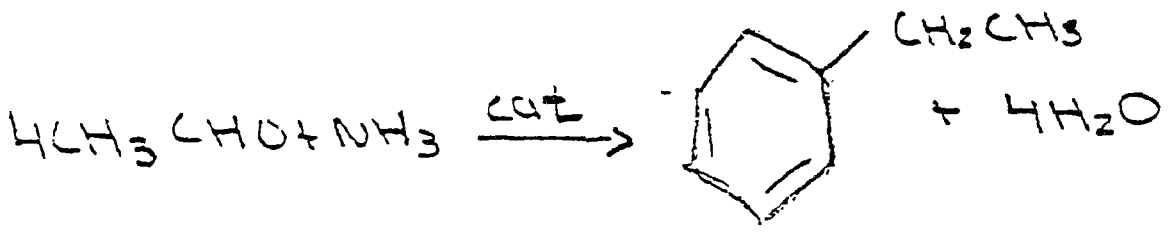

(1)

As shown in the equation, an identified by-product in the reaction is 2-methyl pyridine (α -picoline). The resulting process fluid is then transferred to an ammonia stripping still for ammonia recovery. The remaining fraction goes to a cleaner (decanter). The cleaned MEP fraction residue is further refined by a batch still.* The residue from the cleaner is processed by a water layer stripping still. The stripping still tails from this process are labelled (1) in Figure 1.

III. WASTE GENERATION AND MANAGEMENT

The stripping still tails are generated at a rate of approximately 0.04 Kg/Kg of refined MFP.(1) This amounts

*The process effluent stream indicated as "MEP residues" from the batch still is not included in the waste listing because data is not yet available on the constitutents in this waste stream.

to 720 metric tons of waste in 1973.

The TRW Study[1] identifies the following as the major contaminants in the listed waste stream:

paraldehyde	0.03 Kg/Kg MEP
sulfuric acid	0.003 Kg/Kg MEP
pryidines and picolines	0.0025 Kg/Kg MEP
soluble acetates	0.0025 Kg/Kg MEP
phenol	0.0000003 Kg/Kg MEP*

This data indicates that approximately 75 percent of the total waste accounted for is paraldehyde.

According to the 1976 study, industry practice is to manage the process effluent waste stream by sending it to wastewater treatment. As part of the wastewater treatment system, the waste is most likely stored/treated in lagoons.

IV. HAZARDOUS PROPERTIES OF THE WASTE

The waste is considered to pose a potential hazard to human health or the environment because of the presence of toxic organics.

All of these waste constituents are acutely or chronically toxic, and paraldehyde is included in the NIOSH list of suspect carcinogens (see pp. 11-16 for further health

*Phenol, while a hazardous waste constituent, is not deemed to be present in sufficient concentration to be of regulatory concern.

effects). The waste constituents are present in the wastes in high concentrations (see p. 5), and are also generated in fairly substantial quantities annually, so that there is a greater possibility of the hazardous constituents reaching environmental receptors should improper management occur. Exposure should also take place over longer periods of time, since substantial quantities of pollutants are available for environmental loading. Thus, the Agency would require some assurance that waste components will not migrate and persist to warrant a decision not to list this waste stream. No such assurance appears possible.

Each of the identified waste constituents has extremely high water solubility (indeed, pyridene and 2-picoline are infinitely water-soluble). (See Table 1.)

As a result of this high constituent solubility, this waste are likely to leach harmful constituents even under relatively mild environmental conditions, and to be highly mobile in ground and surface waters* (App. B). If these wastes are exposed to more acidic environments, such as environments subject to acidic rainfall, the potential for waste migration increases. (See Table 1.)

Current waste management practices involve waste water treatment in lagoons. The potential for environmental

*Mobility through soil is expected to be high in light of these waste constituents' high solubilities. Further, disposal could occur in areas with permeable soils, so that mobility of waste constituents would not be substantially affected.

Table 1

Physical/Chemical Properties of Organics Identified in Stripping Still Tails[a]

Compound:	paraldehyde	pyridine	2-picoline[b]
Structure:	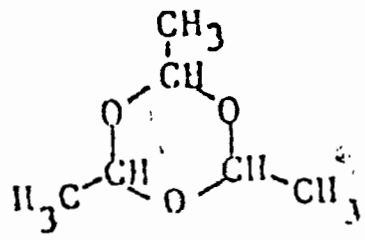		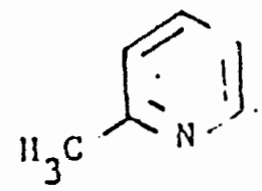
Formula:	$C_6H_{12}O_3$	C_5H_5M	C_6H_7N
NW:	132	79	93
B.P., °C:	128	115	129(143)
Vp, mm, 25°C:	10	22	10
Sat'd. vapor[d] conc'n, 25°C, g/m^3:	71	93	50
Water solubility[e]:	v	inf.	v (inf.)
Octanol/water[f] partition coefficient:	2.8(est.)	4.5	13
Acid dissociation constant[g]:		5.2	5.9 (5.7; 6.0)

[a] Except as noted, data are from Weast, Ref. 6

[b] Most data are available for 2-picoline. This is also the identified by-product of MEP production and therefore the isomer most likely present in the waste. Values in parentheses are for 3- and 4-picoline which have the same B.P. solubility

[c] Calculated from data in Weast[(6)] pD-123.

[d] Calculated from vapor pressure data: g/m^3 $\frac{VP}{760} \times \frac{MW}{RT}$

Table 1 (Continued)

[e] v = very soluble (probably > 1%)
inf = infinitely soluble
s = soluble (probably > 0.1%)

[f] Source, Reference 7.

[g] For pyridine and picoline, value indicated is pka of the conjugate acid. Source, References 8,9.

contamination exists from improper lagooning, or through subsequent improper disposal of wastewater treatment sludges. Thus, improperly designed or managed lagoons - for example, those located in areas with permeable soils, or those lacking leachate control features -- could fail to prevent leachate migration into the environment in light of the solubility of the waste constituents, and the large amounts of available percolating liquid in the lagoon. Exposure via a surface water pathway is also possible if lagoons are constructed without proper flood control or wash out measures

If waste sludges are improperly landfilled they present a similar potential hazard. Lack of leachate control or improper siting thus could lead to waste migration.

Another pathway of concern is through airborne exposure to these volatile organics present in the stripping still tails. Some physical/chemical properties of the organic species that are relevant to their potential for adverse environmental impact are indicated in Table 1. Each of the organic species listed is highly volatile, with vapor pressures corresponding to saturation concentrations in the range of grams per cubic meter at 25°C (1 ppm (v/v) corresponds to about 1 milligram per cubic meter). Pyridine and 2-picoline are particularly volatile. Substantial fractions of contaminants present in the waste could thus volatilize to the atmosphere from lagoons and landfills that are not properly designed and operated, increasing the risk of inhalation of waste contaminants.

Once released from the matrix of the waste these constituents can persist and reach environmental receptors. Available data (21) indicates that biodegradation is the chief degradation mechanism with respect of paraldehyde and pyridine. Thus, these constituents could persist in the abiotic conditions of an aquifer similarly, persistence in air may occur.

V. HEALTH AND ENVIRONMENTAL EFFECTS

There is substantial evidence concerning the toxic effects of the organic species of concern. Table 2 summarizes some data from the Registry of Toxic Effects of Chemical Substances.[11] Paraldehyde is included in the NIOSH List of Suspected Carcinogens.[12]

1. Paraldehyde

Paraldehyde exhibits moderate toxicity when injested and low toxicity when applied to the skin.[13] Signs and symptoms of paraldehyde poisoning are uncoordination and drowsiness, followed by sleep. With larger doses, the pupils will dilate and reflexes will be lost; comotosis will follow. The systoms of chronic intoxication from this material are disturbances of digestion, continued thirst, general emaciation, muscular weakness and mental fatigue.[13] Sax also warns that paraldehyde is dangerous and should be kept away from heat and open flames, because when heated, it emits toxic flames.[13]

Table 2

Summary of Data on Toxicity of Organics Identified in Stripping Still Tails[11]

Compound		
Paraldehyde	Pyridine	2-Picoline
14	500	--
1530	891	790
--	5	--
--	100-1000	--

2. Pyrines

Pyrines exhibit moderate toxicity when introduced to the human through oral, dermal and inhalation routes.[13] Liver and kidney damage have been produced in animals and in man, after oral administration.[14] In smaller doses, conjunctivitis, dizziness, vomiting, diarrhea and jaundice may appear;[15] also tremors and atoxia (deffective control of muscles), irritation of the respiratory tract with asthemic breathing, parlysis of eye muscles, paralysis of vocal chords and paralysis of bladder have been reported.[15] Threshold limit values (TLV) have been established by a number of countries for the protection of employees. These values should not be exceeded for an 8-hour shift of a 40-hour week:

USSR:	1.5 ppm	=	5 mg/cum
USA:	5 ppm	=	15 mg/cum
BRD*:	5 ppm	=	15 mg/cum
Sweden:	5 ppm	=	15 mg/cum

In drinking water pyridene produces a faint odor at 0.0037 ppm and is a taste and odor problem at 0.8 ppm.[16] Adverse taste in fish (carp, rudd) is reported at 5 ppm.[16] Pyridine causes inhibition of cell multiplication algae

* Federal Republic of Germany

(Michrocystis aeruginosa) and bacteria (Pseudomas putida) at 28 and 340 ppm, respectively. Sax[13] reports a number of other hazards assoiated with pyridines: (1) fire hazard, that is dangerous when it is exposed to heat, flame or oxidizer; (2) explosive hazard, that is severe when it is in the form of a vapor and is exposed to flame or spark; and (3) disaster hazard, that is dangerous when heated to decomposition, the pyridine emits highly toxic fumes of cyanides.

An EPA report[20] suggests that, based on health criteria, the ambient level of pyridines in water should not exceed 207 mg/L. On an ecological basis, it should not exceed 5000 mg/L.

3. Picolines

Picolines as a class exhibit high toxicity via dermal route and moderate toxicity via oral and inhalation routes.[13] γ-picolines, α-picolines and β-picolines are dangerous when heated to decomposition because of the emission of toxic fumes of NO_x. The USSR has established a threshold limit value at 5 mg/m^3 for mixed isomers.[16]

An EPA report[20] suggests that, based on a health criteria, the ambient levels of picolines in water should not exceed 316 mg/l.

REFERENCES

1. G. I. Gruber, et al., (TRW) "Assessment of Industrial Hazardous Waste Practices: Organic Chemical, Pesticides and Explosives Industries," U.S. EPA, SW-118C, January, 1976, pp. 5-26 to 5-28.

2. United States International Trade Commission, Synthetic organic Chemicals: United States Production and Sales, 1978. USITC Publication 1001, 1979. pp. 33-80.

3. R. A. Abramovitch, "Pyridine and Pyridine Derivatives," in E. P. Dukes, C. Coleman, P. Hirsch, G. Joyce, P. Van Reyen and G. C. Wronker, eds., Kirk-Othmer Encyclopedia of Chemical Technology, 2nd Edition, Vol. 16, John Wiley and Sons, N.Y., 1968. pp. 780-803.

4. M. J. Baker, B. D. Bradley, C. L. Gandenberger, E. M. Giordano, J. B. Mertz, L. E. Nash and M. S. Nash, eds., Chem-Sources-USA, 1980 edition, Directories Publishing Co., Ormond Beach, FLorida, 1980. pp. 296.

5. M. J. Astle, Industrial Organic Nitrogen Compounds, ACS Monograph Series, Reinhold Publishing Corporation, N.Y., 1961. pp. 134-145.

6. R. C. West, Ed. in Chief, Handbook of Chemistry and Physics, 47th Editon, Chemical Rubber Company, Cleveland, Ohio, 1966.

7. C. Hansch and A. J. Leo, Substituent Constants or Correlation Analysis in Chemistry and Biology, John Wiley and Sons, N.Y., 1979. Paraldehyde value is for oil/water rather than octanol/water.

8. D. D. Perrin, Dissociation Constants of Organic Bases in Aqueous Solution, Butterworts, London, 1965.

9. G. Kortum, W. Vogel and K. Andrussow, Dissociation of Organic Acids in Aqueous Solution, Butterworths, London, 1961.

10. Federal Register, Vol 43, No. 243, 59025-27, "Bioaccumulation Potential Test."

11. R. J. Lewis, Sr;, and R. L. Tatked, eds., NIOSH, Registry of Toxic Effects of Chemical Substances, U.S. Department of Health, Education and Welfare, 1978.

12. U.S. EPA, An Ordering of the NIOSH Suspected Carcinogens List, NITS Report No. PB 251 851 (EPA No. 660/1-76-003), March, 1976.

13. Sax, N. Irving, Dangerous Properties of Industrial Material, fifth edition, VAn Nostrand Reinhold Company, 1979.

14. Deichmann, W. R., Toxicology of Drugs and Chemicals. Academic Press, Inc. 111 Fifth Avenue, New York, New York 10003. 1969

15. Toxic and Hazardous Industial Chemical Safety Manual for Handling and Disposal with Toxicity and Hazard Data. The International Technical Information Institute. Toranomon-Tachikawa Bldg., 6-5, 1 Chome, Nishi-Shimbashi, Minato-ku, Tokyo, Japan. 1976.

16. Verchuerer, Karek, Handbook of Environmental Data on Organic Chemicals. Van Nostrand Reinhold Company. 1977.

18. Merliss, R. R. Phenol moras. Mus. Jour. Occup. Med. 14:55. 1972.

19. Gosselin, R. E., H. C. Hodge, R. P. Smith and M. N. Gleason, Clinical Toxicology of Commercial Products, Acute Poisoning. Fourth edition. The Williams and Wilkins Co., Baltimore, Md. 1976.

20. J. G. Cleveland and G. L. Kingsbury, "Multimedia Environmental Goals for Environmental Assessment," Vol. 2. EPA Report No. 600/7-77-136b, November, 1977.

21. Dawson, English and Petty, 1980. Physical Cheminal Properties of Hazardous Waste Constituents.

LISTING BACKGROUND DOCUMENT
TOLUENE DIISOCYANATE PRODUCTION

Centrifuge residues from toluene diisocyanate production (R,T)

I. Summary of Basis for Listing

The centrifuge residues from the production of toluene diisocyanate (TDI)* contain toxic organic substances, mutagenic substances, and substances that are probably carcinogenic. The wastes are also highly reactive upon contact with water. These wastes result from the production of toluene diisocyanate through the coupling of toluene diamines and phosgene.

The Administrator has determined that toluene diisocyanate wastes may pose a substantial present or potential hazard to human health or the environment when improperly transported, treated, stored, disposed of or otherwise managed, and therefore should be subject to appropriate management requirements under Subtitle C of RCRA. This conclusion is based on the following considerations:

1) The TDI centrifuge and vacuum distillation wastes consist of toluene diisocyanates, toluene diamines, and polymeric tars, all of which are suspected carcinogens.

2) More than 6000 metric tons of TDI production wastes are produced per year.

3) Storage in drums in a landfill, a known management method for this waste, poses a risk because toluene diisocyanate (TDI) is a highly reactive, pressure-generating compound which has caused explosion of drums. Several such damage

*This compound is also referred to as tolylene diisocyanate or tolyl diisocyanate.

incidents have occurred demonstrating the potential for improper disposal of diisocyanate wastes.

4) In addition to the reactivity hazard, this waste could leach toxic toluene diamine into groundwater, if improperly managed, posing a human health risk.

II. Sources of the Waste and Typical Disposal Practices

A. Profile of the Industry

Toluene diisocyanate (TDI) production in the United States in 1973[1] was 330,000 metric tons (661 million pounds). The major producers of mixed toluene diisocyanate isomers[1] in 1979 were Allied Chemical Corporation (Specialty Chemicals Division), BASF Wyandotte Corporation, E. I. duPont de Nemours and Company, Inc., Dow Chemical, U.S.A., Mobay Chemical Company, Olin Corporation, Rubicon Chemicals Inc., and Union Carbide Corporation. Toluene diisocyanate is the major intermediate for the production of polyurethanes. A typical TDI continuous process plant capacity is 27,500 metric tons (60 million pounds per year). The process is illustrated in Figure 1.

B. Manufacturing Process (9,10)

The starting raw materials for a continuous process plant are a solution of toluene-2,4-diamine, 2,6-toluene-diamine, or an 80:20 mixture of the two, an inert solvent (o-dichlorobenzene) and gaseous phosgene. These compounds are fed to two jacketed, agitator-equipped reactor kettles, in series, along with recycled solvent where the

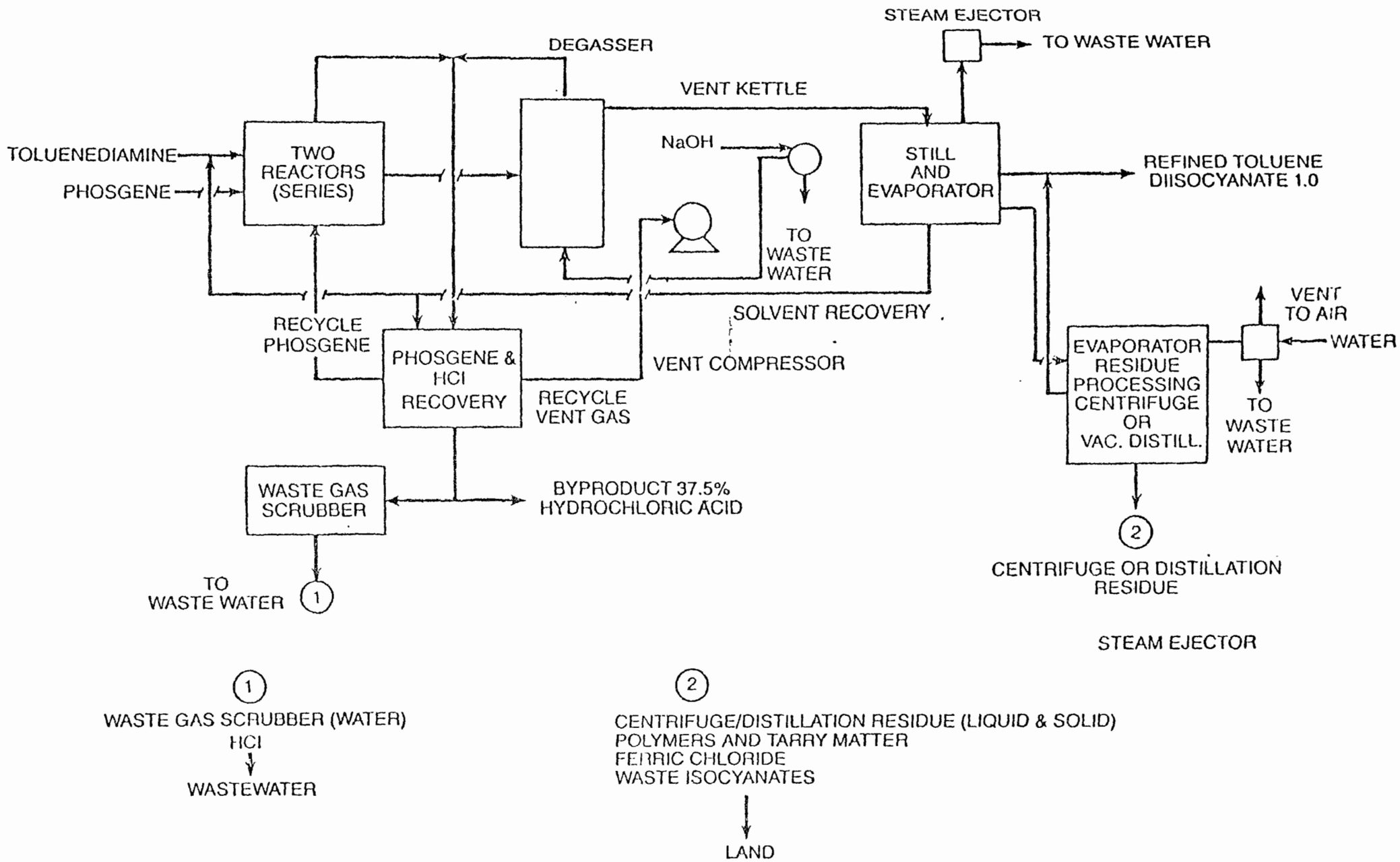

Figure 1. TOLUENE DIISOCYANATE MANUFACTURE (MODIFIED FROM REFERENCE 9)

following reactions shown in Figure 2 and 3 take place. An excess of phosgene is used in this process step. The unreacted phosgene and hydrogen chloride formed by the reaction constitute the major components of the gas stream exiting the second reactor. The reactor exit gas goes to a phosgene recovery/by-product hydrochloric acid recovery system. All equipment is vented to scrubbers. The phosgene and hydrogen chloride are recovered in the scrubbers.

The recovered phosgene is recycled as a solution in the recovered solvent to the first reactor. The by-product hydrochloric acid (2.32 Kg of 37.5 percent HCl/Kg TDI product) is recovered from the gas stream after removal of the phosgene and is stored or sold. The waste gas scrubber effluent, containing residual hydrogen chloride (0.025 Kg/Kg TDI product) dissolved in water, is neutralized and then sent to the plant industrial outfall.

The dehydrochlorination to form TDI takes place after the reactor liquid (from Reactor 2) has been fed to the degasser. The reaction products from the second reactor are dehydrochlorinated by blowing an inert gas such as natural gas through the solution to remove HCl. The degasser gas is sent to the phosgene and HCl recovery system, where the HCl and phosgene are recovered as noted above and the inert gas is recyled.

The crude TDI solution from the degassers is fed to the stills and evaporators to recover o-dichlorobenzene solvent and purify the TDI. The purified TDI is sent to storage. The recovered solvent is recycled for use in recovery of phosgene and as a solvent for the toluenediamine

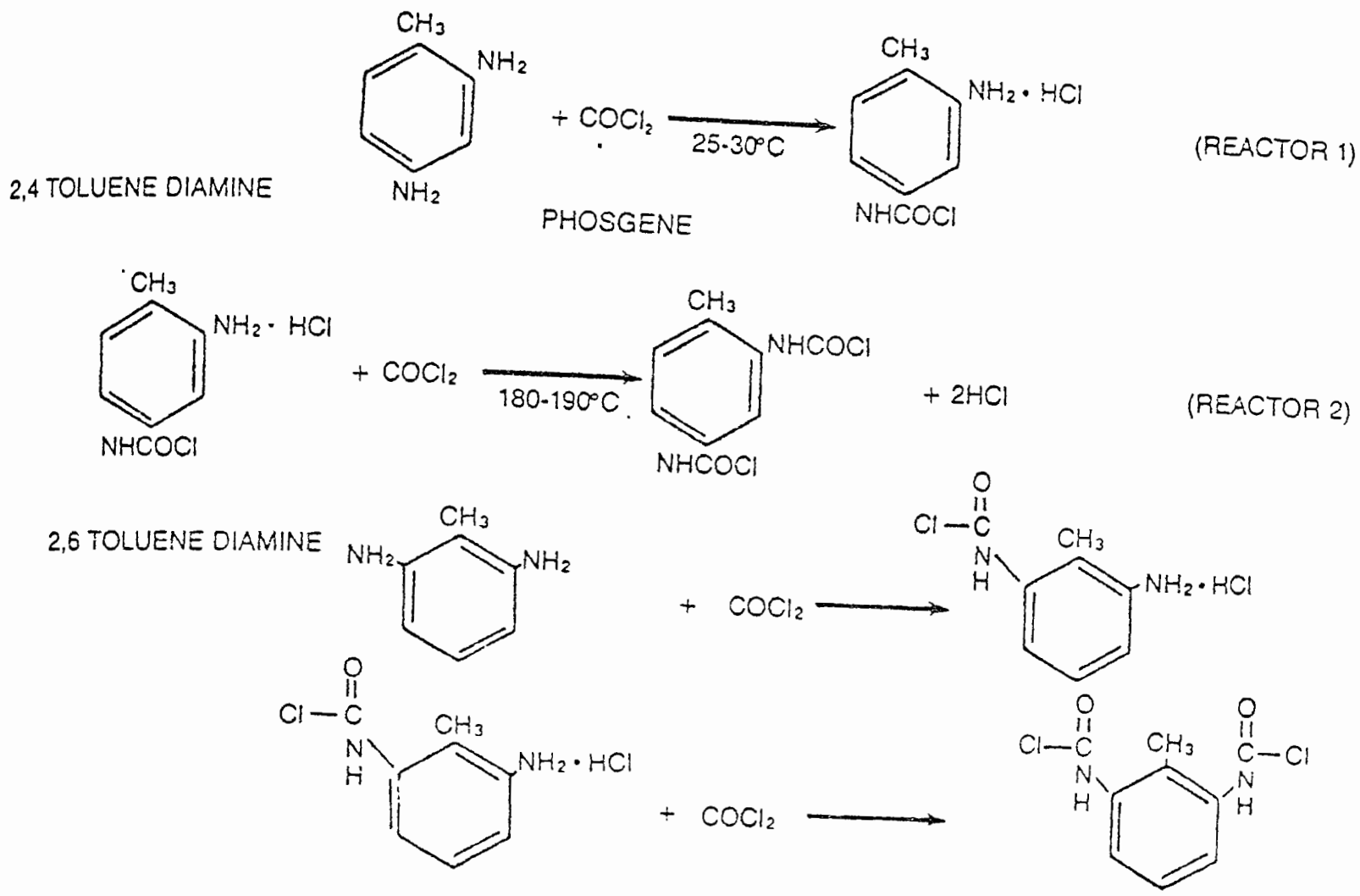

Figure 2. REACTIONS OF 2,4 AND 2,6-TOLUENEDIAMINE (9)

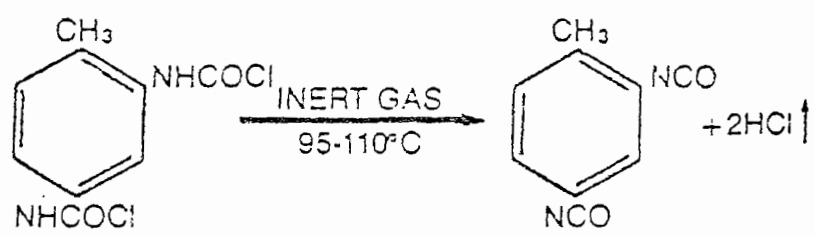

Figure 3. DEHYDROCHLORINATION REACTION TO FORM TDI (9)

feed. The liquid evaporator residue containing some TDI and waste products is then further processed by either centrifugation or vacuum distillation to recover additional TDI product. The remaining centrifugation or vacuum distillation residue is the waste stream listed in this document.

C. Waste Generation and Management

Approximately 0.021 Kg of waste are generated per Kg of TDI produced.[11] Based on 1973 production, this results in an excess of 6000 metric tons of centrifuge and distillation residues requiring disposal. The material contains 90 percent polymers and tarlike matter, 6 percent ferric chloride (largely from process impurities) and 3 percent waste isocyanates.[11]

The wastes are known to be disposed of in both on- and off-site landfills, and on occasion to be containerized in drums prior to landfilling (See pp. 5-6 following.)

III. Discussion of Basis for Listing

A. Hazards Posed by the Waste

As shown above, the 6000 metric tons of TDI production wastes that are generated annually are expected to contain the following components:

- Polymers and tarlike materials - 90%
- Ferric chloride - 6%
- Waste isocyanates (including TDI) - 3%

The waste isocyanates and polymer and tar-like material are toxic and the free isocyanates are potentially highly reactive with other materials, including water.

1. Reactivity Hazard

Toluene diisocyanate, and other free isocyanates present in TDI waste, are known to react violently upon contact with water. The reaction of free isocyanate groups with water usually occurs very rapidly, is exothermic, and results in the violent formation of aromatic diamines and carbon dioxide gas. The disposal of these residues is potentially hazardous to the people handling them, since, should water come in contact with the waste, there could be explosive release of toxic and potentially carcinogenic aromatic chemicals over a wide area. A similiar danger exists even if the wastes are drummed, since if water enters, dangerously high pressures can result in rupture of the drum, followed by explosive release of the contaminants. For this reason, long-term storage of these wastes in steel drums at waste disposal sites is considered extremely hazardous if containment is breached and water infiltrates the drum.

There have been several damage incidents associated with improper disposal of toluene diisocyanate wastes, which confirm that this waste stream is reactive. In California in 1978, a drum containing TDI waste was picked up by a scavenger waste hauler and placed in an unprotected storage area. After having been exposed to rain, the drum was then removed

to a Class I landfill where it exploded, requiring the hospitalization of several people.* In Detroit in May of 1978, a tank truck waiting to dispose of a quantity of TDI waste experienced a boil-over. As a result nine people exposed to the toxic fumes were hospitalized.*

These damage incidents illustrate the hazards created by improper treatment, storage or disposal of TDI production waste. In view of the above information, it is apparent that the waste meets the standard for reactivity set in §261.23(a) (2) and (4).

2. Toxicity Hazard Via Ground and Surface Water Exposure Pathways

These wastes also pose a hazard via ground and surface water pathways due to their toxicity and potential for genetic harm. The principal component of concern for this route of exposures is toluene-2,4-diamine, which is produced by the reaction of diisocyanates with water, and is a suspect carcinogen.** (See pp. 8-10 following.) TDI tars are also suspect carcinogens, and are toxic as well (Id.)

These materials are capable of migrating from improperly designed and managed waste disposal sites. Toluene-2,4-diamine, produced by the react of the diisocyantes with water (12) is very soluble (13).

Thus, if waste disposal sites are designed improperly or are improperly managed--for example sited in areas with highly permeable

*OSW Hazardous Waste Division, Hazardous Waste Incidents, unpublished, open file, 1978.

**Toluene diisocyanate, while toxic and a suspect carcinogen, is too reactive to persist in water, and so probably would not pose a toxicity hazard via water. It may, however, pose a toxicity hazard in direct handling of the waste.

soils, or constructed without natural or artificial liners--there is a possibility of escape of waste constituents to groundwater. A further possibility of substantial hazard arises during transport of these wastes to off-site disposal facilities. This increases the likelihood of their being mismanaged, and may result either in their not being properly handled during transport or in their not reaching their destination at all, thus making them available to do harm elsewhere. A transport manifest system combined with designated standards for the management of these wastes will thus greatly reduce their availability to do harm to human beings and the environment. The damage incidents described above in fact demonstrate hazards which may arise during off-site transportation and management.

The Agency presently lacks reliable data as to the environmental persistence of the waste constituents of concern (although polymeric tars are generally persistent due to their physical character). It is assumed that waste constituents are persistent enough to remain in the environment long enough to cause substantial hazard, a conclusion supported by the actual damage incidents involving these wastes. Further information as to the waste's and waste constituents' persistence is, however, solicited.

A final reason for listing these wastes as hazardous is the quantity of wastes generated. The wastes are generated in fairly substantial quantity--6,000 MT annually. Thus, large quantities of hazardous constituents are available for environmental release, increasing the likelihood of exposure if the wastes are mismanaged. Large expanses

of groundwater could similarly be polluted. Contaminant migration also may occur for long periods of time, since large amounts of pollutants are available for environmental loading. All of these considerations increase the possibility of exposure, and support a hazardous waste listing.

B. Health and Ecological Effects

1. Toluene Diisocyanate

Health Effects - TDI is a suspect carcinogen under bioassay study by National Cancer Institute. TDI is toxic [inhalation rat LD_{50} =600ppm/6hr.] and is an irritating material, both in its liquid and airborne forms, because of its high reactivity. It can produce skin and respiratory tract irritation, and can cause sensitization so that sensitized individuals are subject to asthmatic attacks upon re-exposure to extremely low concentrations of TDI. Additional information and specific references on the adverse effects of TDI can be found in Appendix A.

Regulations - The OSHA standard for toluene diisocyanate is 5 ppb, with a ceiling of 20 ppb in 10 minutes.

Industrial Recognition of Hazard - Sax's Dangerous Properties of Industrial Materials(2) designates toluene diisocyanate as an emitter of highly toxic fumes containing hydrogen cyanide when heated to decomposition.

2. Toluene-2,4-diamine

Health Effects - Toluene-2,4-diamine is a suspect carcinogen[3]. Although it did not cause cancer in animals upon skin painting,[4] it increased the incidence of lung cancer in the test animals. Toluene diamine was also shown to induce liver tumors[5] in rats,[6] morphological aberrations in mammalian cells[7], and causes bacterial mutation in the Ames test.[8] Additional information and specific references on the adverse effects of toluene 2,4-diamine can be found in Appendix A.

Industrial Recognition of Hazard - Toluene-2,4-diamine is designated in Dangerous Properties of Industrial Materials (Sax)[2] as moderately toxic when inhaled.

3. Tar from TDI Manufacturing

Health Effects - Tarlike material from TDI manufacturing contains benzidimidazapone and must be considered suspect carcinogen based on the data available on coal tar and other chemical tars. (NIOSH Criteria for recommended standard for occupational exposure to Coal Tar Products.) Considering the highly reactive nature of isocyanates and their polymers, various toxic effects such as skin and respiratory tract irritation and sensitization also would be expected. Sensitized individuals are subject to asthmatic attacks upon re-exposure to extremely low concentrations of this material. Additional information on the adverse effects of tarlike materials can be found in Appendix A.

Industrial Recognition of Hazard - Sax's Dangerous Properties of Industrial Materials[2] designates dehydrated and liquid tars as highly

toxic skin and respiratory irritants when exposure is of long duration. Tar dusts are designated as moderate skin and eye irritants upon acute exposure.

IV. References

1. U.S. Tariff Commission (U.S. International Trade Commission) Synthetic Organic Chemicals, United States Production and Sales. 1974 Preliminary Reports. Washington, U.S. Government Printing Office.

2. Sax, N. Irving. Dangerous Properties of Industrial Materials, Fourth Edition, Van Nostrand Reinhold Co., New York, 1975.

3. USEPA. Report 1980 Contract # 68-02-2773. Potential Atmospheric Carcinogens. Phase I - Identification and Classification, pp. 204.

4. Giles, A.L., et al. Dermal Carcinogenicity Study by Mouse-Skin Painting with 2,4-Toluenediamine Alone or in Representative Hair Dye Formulations. J. Toxicol. Environ. Health, 1(3):433-440, 1976.

5. Bridges, B.A., and M.H. Green. Carcinogenicity of Hair Dyes by Skin Painting in Mice (letter to editor). J. Toxicol. Environ. Health, 2(1):251-252, 1976.

6. Shah, M.J., et al. Comparative Studies of Bacterial Mutation and Hamster Cell Transformation Induced by 2,4-Toluenediamine (Meeting Abstract). Proc. Am. Assoc. Cancer Res., 18:22, 1977.

7. Cancer Research, 29:1137, 1969.

8. Pienta, R.J., et al. Correlation of Bacterial Mutagenicity and Hamster Cell Transformations with Tumorigenicity Induced by 2,4-Toluenediamine. Cancer Lett. (Amsterdam), 3(1/2): 45-52, 1977.

9. Lowenheim and Moran. Faith, Keyes, and Clark's Industrial Chemicals, 4th ed., John Wiley and Sons, 1975.

10. Kirk-Othmer. Encyclopedia of Chemical Technology. 3rd ed., John Wiley and Sons, Inc., New York, 1979.

11. Industrial Process Profiles for Environmental Use: Chapter 6, The Industrial Organic Chemicals Industry. Reimond Liepins, Forest Mixon, Charles Hudals, and Terry Parsons, February 1977, EPA-600/2-77-023f.

12. "Criteria for a Recommended Standard Occupational Exposure to TDI," U.S. Dept. of HEW, Public Health Service and National Institute of Occupational Safety and Health, HSM 73-110-22 (1973).

13. Handbook of Chemistry and Physics, 56th ed., Cleveland, CRC Press (1975).

LISTING BACKGROUND DOCUMENT

TRICHLOROETHANE PRODUCTION

- Waste from the product steam stripper in the production of 1,1,1-trichloroethane (T)
- Spent catalyst from the hydrochlorinator reactor in the production of 1,1,1-trichloroethane via the vinyl chloride process (T)
- Distillation bottoms from the production of 1,1,1-trichloroethane (T)
- Heavy ends from the production of 1,1,1-trichloroethane (T)

I. Summary of Basis for Listing

Waste from the heavy ends column, distillation column, and product steam stripper, and spent catalyst from the hydrochlorinator reactor in the production of 1,1,1-trichloroethane contain carcinogenic, mutagenic, teratogenic or toxic organic substances. The waste stream constituents of concern are 1,2-dichloroethane, 1,1,1-trichloroethane, 1,1,2-trichloroethane, 1,1,1,2-tetrachloroethane, and 1,1,2,2-tetrachloroethane, vinyl chloride, vinylidene chloride, and (possibly) chloroform.

The Administrator has determined that these solid wastes from 1,1,1-trichloroethane production may pose a substantial hazard to human health or the environment when improperly transported, treated, stored, disposed of or otherwise managed, and therefore should be subject to appropriate management requirements under Subtitle C of RCRA. This conclusion is based on the following considerations:

1) These wastes are listed as hazardous because they are likely to

contain 1,2-dichloroethane; 1,1,1-trichloroethane; 1,1,2-trichloroethane; 1,1,1,2-tetrachloroethane; 1,1,2,2-tetrachloroethane; vinylidene chloride; vinyl chloride and chloroform. Of these substances, 1,2-dichloroethane, 1,1,2-trichloroethane, vinylidene chloride, vinyl chloride and chloroform are recognized carcinogens and 1,1,1-trichloroethane is a suspected carcinogen; also a number of these chemicals have been found to be mutagenic in laboratory studies; the chlorinated ethanes also pass the placental barrier and several have been documented to produce teratogenic effects.

2) Significant quantities of wastes containing these hazardous compounds may be generated each year, increasing the possibility of exposure should mismanagement occur.

3) Mismanagement of incineration operations could result in the release of hazardous vapors to the atmosphere and present a significant opportunity for exposure of humans, wildlife and vegetation in the vicinity of these operations to potentially harmful substances through direct contact and also through pollution of surface waters. Disposal of these wastes in improperly designed or operated landfills could create a substantial hazard due to the potential of waste constituents to migrate and persist in aqueous environments.

4) Damage incidents illustrating the mobility and persistence of chloroethanes have occurred which resulted in surface and groundwater contamination.

II. Sources of the Waste and Typical Disposal Practices

A. Profile of the Industry

Currently, there are three producers of 1,1,1-trichloroethane in the United States. Table 1 lists the producers, sites, and estimated capacities of each plant. Actual production of this compound in 1978 was 644,475,000 pounds[3].

The production of 1,1,1-trichloroethane has shown a steady increase in production as shown in Table 2. It is mainly used (92%) for metal degreasing and for electrical, electronic and instrument cleaning. Growth in the use of 1,1,1-trichloroethane is being accelerated because of the potentially greater health hazard exhibited by trichloroethylene.

TABLE 1

1,1,1-Trichloroethane Producers, Sites, Capacities and Processes [1,2]

Company	Location	Annual Capacity (Millions of Pounds)	Process
Dow Chemical U.S.A.	Freemport, TX Plaquemine, LA	450 300	Via Vinyl Chloride
PPG Industries	Lake Charles, LA	350	Via Vinyl Chloride
Vulcan Materials	Geismar, LA	65	Via Chloronation of ethane
TOTAL	----	1,165	

TABLE 2

U.S. International Trade Commission

1,1,1-Trichloroethane Production (3)

Year	(Millions of Pounds)
1968	299.4
1969	324.3
1970	366.3
1971	374.6
1972	440.7
1973	548.4
1974	590.8
1975	
1976	631.2
1977	634.8

Other solvent uses are in formulating a variety of products including adhesives, spot cleaners and printing inks.

B. Manufacturing and Waste Generation Process*

The bulk of 1,1,1-trichloroethane production in the United States is based upon the vinyl chloride process; minor amounts (-- 10%) are made by the ethane process. In the vinyl chloride process, vinyl chloride reacts with hydrogen chloride to form 1,1-dichloroethane, which is then thermally chlorinated to produce 1,1,1-trichloroethane. The yields based on vinyl chloride are approximately 95%.

1,1,1-Trichloroethane is also produced by the noncatalytic chlorination of ethane. Ethyl chloride, vinyl chloride, vinylidene chloride, and 1,1-dichloroethane are produced as co-products. When 1,1,1-trichloroethane is the only desired product, vinyl chloride and vinylidene chloride are hydrochlorinated to 1,1-dichloroethane and 1,1,1-trichloroethane respectively; ethyl chloride and 1,1-dichloroethane are recycled to the chlorination step (Kahn and Hughes, Monsanto Research Corp., Source Assessment: Chlorinated Hydrocarbons Manufacture, EPA 600/2-78-004, 1978).

Vinyl Chloride Process

The chemical reaction for the hydrochlorination of vinyl chloride is:

$$H_2C\text{-}CHCl + HCl \xrightarrow[35\text{-}40\,^{\circ}C]{FeCl_3} CH_3HCl_2$$

*Based on the process description in Key, J.A. and Standifer, R.L., Emissions Control Options for the Synthetic Organic Chemicals Manufacturing Industry," U.S. Environmental Protection Agency, EPA 68-02-2577, July 1979

Chlorination of 1,1-dichloroethane is represented as:

$$CH_3\text{-}CHCl_2 + Cl_2 \longrightarrow CH_3CCl_3 + HCl$$

Figure 1 represents a simplified process for production of 1,1,1-trichloroethane via the vinyl chloride process. Vinyl chloride and hydrogen chloride* (and the recycled overhead stream from the light ends column) react at 35-40°C in the presence of ferric chloride. The reactor effluent is neutralized with ammonia. The resulting solid complex (residual ammonium chloride and ferric chloride, and ammonia) is removed by the spent catalyst filter as a semisolid waste stream (Stream G, Fig. 1). The filtered hydrocarbon stream is then distilled in the heavy ends column and high-boiling chlorinated hydrocarbons (tars) are removed as a waste stream (Stream H, Fig. 1).** The overhead from this column is further fractionated in the light ends column into two streams: 1,1-dichloroethane and the lighter components (primarily unreacted vinyl chloride). The lighter components are recycled to the hydrochlorination reactor. The 1,1-dichloroethane product is removed as the bottom stream and is then reacted with chlorine in the chlorination reactor at a temperature of about 400°C. The products from this reaction are distilled, and hydrogen chloride

*The hydrogen chloride (HCl) used for vinyl chloride hydrochlorination is often a by-product from the chlorination of 1,2 dichloroethane or from other processes in the plant complex. If by-product HCl is used, it can contain as much as 3.5% of 1,2-trichloroethane which will carry forward to the product stream stripper waste streams.

**The Agency requests further information on the existence and composition of this identified waste stream. It is anticipated that most heavy waste constituents will be found in the residue of the final distillation column.

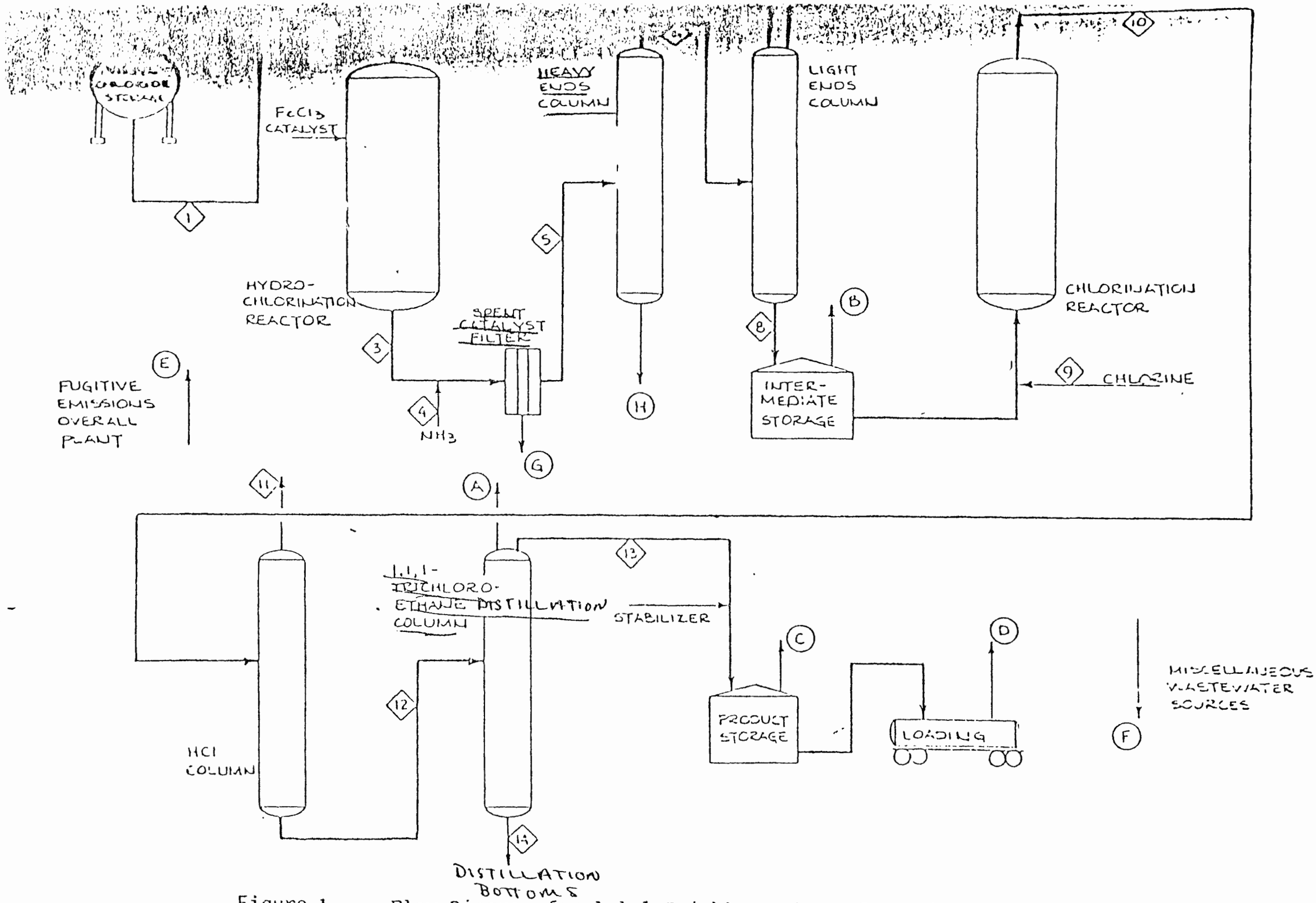

Figure 1. Flow Diagram for 1,1,1-Trichloroethane from Vinyl Chloride

and low boiling organic hydrocarbons are taken overhead in the HCl column. (This stream may be recycled to supply the hydrogen chloride required in the hydrochlorination step, or used for other chlorinated organic processes directly (e.g., oxy-chlorination processes)). The bottom stream from the hydrogen chloride column is further fractionated to recover 1,1,1-trichloroethane as the overhead product, which, after the addition of a stabilizer, is stored. The bottom stream from the 1,1,1-trichloroethane column is comprised largely of 1,1,2-trichloroethane, tetrachloroethanes, and pentachloroethanes (stream 14, Fig. 1). (These bottoms may be used as a feedstock for production of other chlorinated hydrocarbons (e.g., perchloroethylene-trichloroethylene, vinylidene chloride), in which case they will not be discarded.) Estimated emissions from this process are shown in Table 3. The listed waste streams are shown in Figure 1 as follows: spent catalyst wastes are noted as stream G, heavy ends as stream H, and distillation bottoms as stream 14.

Certain 1,1,1-trichloroethane production processes use a steam stripper prior to final distillation and recovery of 1,1,1 trichloroethane, in which case a separate waste stream is generated. The attached Figure 2 shows a process where a steam stripper is used.

Chlorination of Ethane

The main sequence of reactions occurring during the free radical chlorination of ethane is:

$$C_2H_6 + Cl_2 \longrightarrow CH_3CH_2Cl + CH_3CHCl_2 + CH_3CCl_3 + HCl$$

$$C_2H_4 + Cl_2 \longrightarrow CH_2HCl + CH_2CCl_2 + HCl$$

TABLE 3

ESTIMATED EMISSIONS FROM 1,1,1-TRICHLOROETHANE MANUFACTURE: Vinyl Chloride Process

Species	EMISSIONS kg/Mg Air	Aqueous	Solid
Hydrogen chloride	1.6		
Ethane	1.6		
Ethene			
NH_4-$FeCl_3$-3 Complex			2.2
1,1-Dichloroethane	2.2		
1,1-Dichloroethene	9.9		0.8
1,2-Dichloroethane			0.8
1,1,1-Trichloroethane	3.5		3.9
1,1,2-TGrichloroethane	2.6		51.2
1,1,1,2-Tetrachloroethane			35.3
1,1,2,2-Tetrachloroethane			40.8
Pentachloroethane			1.8
Sodium hydroxide		33.7	
Sodium chloride		449.	

Source: Elkin, L.M. "Chlorinated Solvents," Process Economic Program Report No. 48, Stanford Research Institute, Menlo Park, California, February, 1969.

Small amounts of 1,2-dichloroethane and 1,1,2-trichloroethane are also formed in minor amounts. The product mix, however, can be varied somewhat by operating conditions. Furthermore, to maximize 1,1,1-trichloroethane production, ethyl chloride and 1,1-dichloroethane are recycled to the chlorination reactor; vinyl chloride and vinylidene chloride are catalytically hydrochlorinated to 1,1-dichloroethane and 1,1,1-trichloroethane respectively:

$$H_2C{=}CHCl + HCl \xrightarrow{FeCl_3} CH_3CHCl_2$$

$$CH_2{=}CCl_2 + HCl \xrightarrow{FeCl_3} CH_3CCl_3$$

Figure 3 represents a simplified process for production of 1,1,1-trichloroethane via direct chlorination of ethane. Chlorine and ethane react in an adiabatic reactor at an approximate temperature of 400°C and a pressure of 6 atmospheres with a residence time of approximately 15 seconds. The reactor effluent (containing unreacted ethane, ethylene together with vinyl chloride, ethyl chloride, vinylidene chloride, 1,1-dichloroethane, 1,2-dichloroethane, 1,1,2-trichloroethane, 1,1,1-trichloroethane, a small amount of higher chlorinated hydrocarbons, and hydrogen chloride) is quenched and cooled. The bottom stream from the quench column, consisting primarily of tetrachloroethane and hexachloroethane, is removed. The overhead product from the quench column is fractionated into a chlorinated hydrocarbon stream and light products -- ethane, ethylene, and hydrogen chloride. A portion of the crude hydrogen chloride stream is used in subsequent hydrochlorination reactions; excess hydrogen chloride is purified for reuse or resale. The bottom stream from

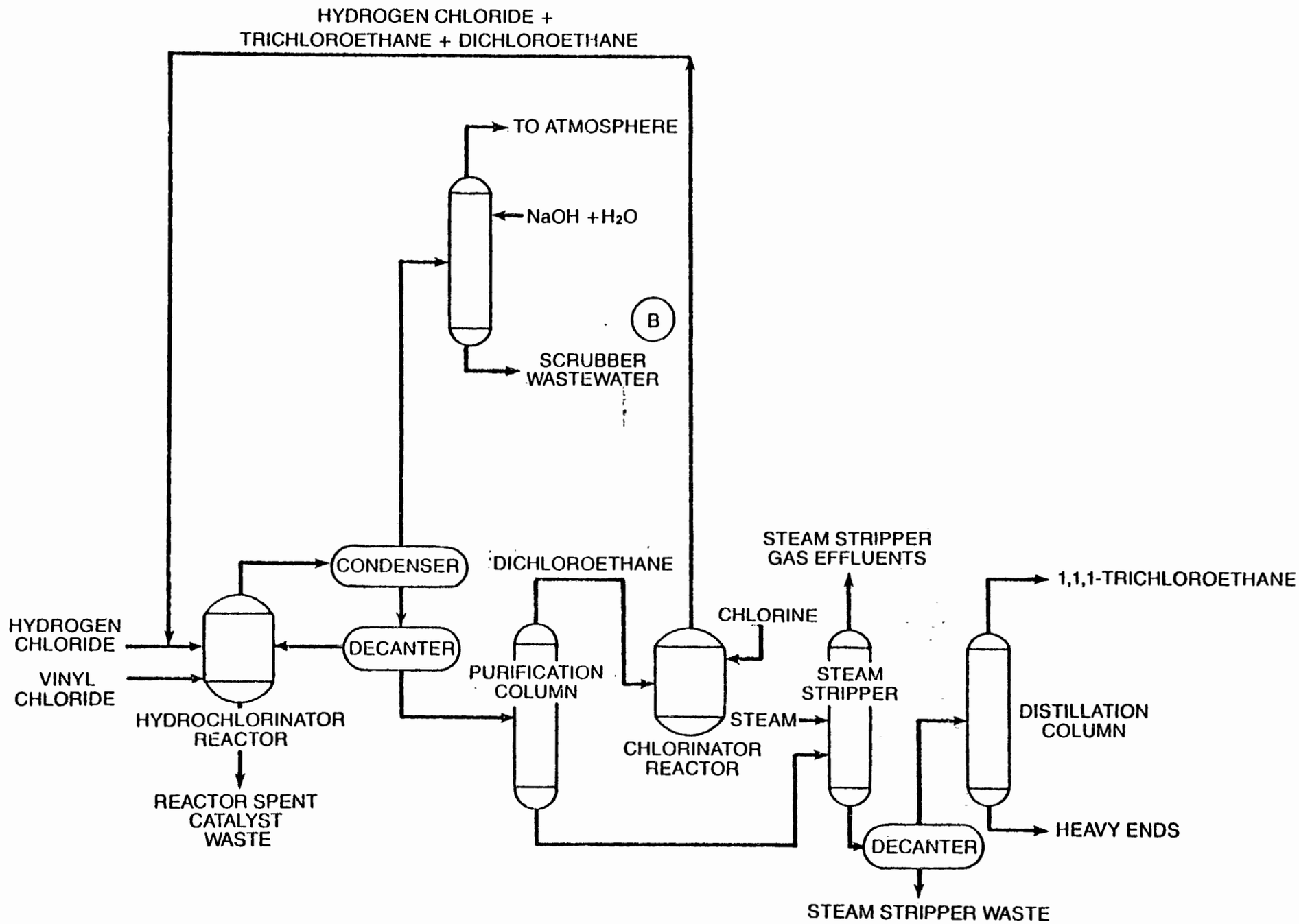

Figure 2. 1,1,1-TRICHLOROETHANE BY THE HYDROCHLORINATION AND DIRECT CHLORINATION OF VINYL CHLORIDE. (53)

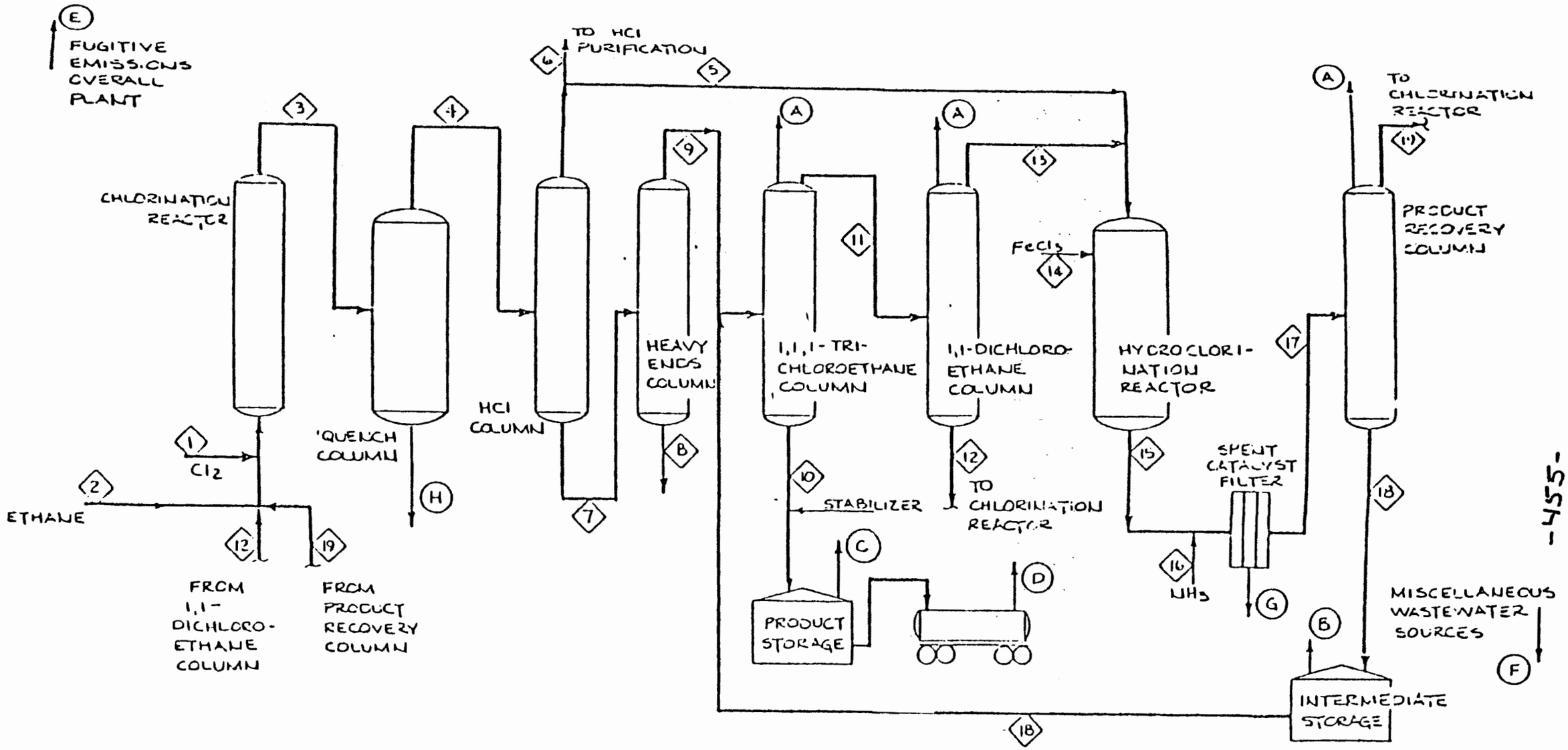

Figure 3. Flow Diagram for 1,1,1-Trichloroethane from Ethane

the hydrogen chloride column is further separated by distillation into various products. The lower boiling hydrocarbons are removed as an overhead product in the first column. The bottoms contain substantially all the heavy waste materials (tetrachlorinated ethanes and higher). The bottoms may be disposed of as waste or used as feedstock for as a bottom stream and are suitable as feedstock for other chlorinated hydrocarbon processes. These bottoms are the waste stream of concern from the ethane chlorination process. (The remaining process description is provided for informational purposes.)]

The overhead product (principally 1,1,1-tricholroethane, vinyl chloride, vinylidene chloride, ethyl chloride, and 1,1-dichloroethane) is fractionated and 1,1,1-trichloroethane removed as a bottom product. The overhead stream from the 1,1,1-trichloroethane column is fed to the 1,1-dichloroethane column, where 1,1-dichloroethane is separated as the bottoms stream and is recycled as a feedstock to the chlorination reactor. Vinyl chloride, vinylidene chloride, and ethyl chloride (the overhead stream) are fed to the hydrochlorination reactor, where vinyl chloride and vinylidene chloride react with hydrogen chloride to form 1,1-dichloroethane and 1,1,1-trichloroethane respectively. Approximate hydrochlorination reaction conditions are at a temperature of 65°C and 4 atm.

The reactor effluent stream from the hydrochlorination reactor is neutralized with ammonia. The resulting complex (ammonium chloride-ferric chloride - ammonia) is removed by the spent catalyst filter as a semisolid waste. (This is the analogous stream to the spent catalyst waste in the vinyl chloride process (see Fig. 1), but is not

listed as hazardous when arising in the ethane chlorination process since it consists principally of iron chloride and hydrogen chloride (see Table 4)). The filtered hydrocarbon stream is fractionated further: the bottom fraction (primarily 1,1,1-trichloroethane) is recycled to the trichloroethane column. The overhead stream (primarily ethyl chloride and 1,1-dichloroethane) is recycled to the chlorination reactor. Table 4 summarizes the estimated emissions from this process. As shown, predicted waste constituents are 1,2-dichloroethane, 1,1,1-trichloroethane and higher boiling ethanes which are expected to comprise the major percentage of the waste.

Table 5 summarizes waste consituents and estimated waste constituent amounts in waste streams generated by each process.

C. Waste Management Practices

The Agency presently lacks reliable information as to the management practices for these wastes, but based on typical waste management practices in the chlorinated organic manufacturing industry it is likely that distillation bottoms and heavy ends are landfilled (perhaps in drums). Aqueous wastes are probably stored on site in pits that equalize surges in the waste flow to landfill operations. Some wastes also may be incinerated.

III. Discussion of Basis for Listing

A. Hazards Posed by the Waste

The various waste streams from the production of 1,1,1-trichloroethane are likely to be generated in large quantities, as indicated by a comparison of the waste emission factors contained in Tables 3, 4, and 5 and the production data in Table 2. Such substantial

TABLE 4

ESTIMATED EMISSIONS FROM 1,1,1-TRICHLOROETHANE MANUFACTURE: Chlorination of Ethane

Species	EMISSIONS kg/Mg Air	Aqueous	Solid
Ethene	2.4		
1,1-Dichloroethane			trace
1,2-Dichloroethane			30.7
1,1,1-Trichloroethane			39.0
1,1,2-Trichloroethane			49.7
Tetrachloroethanes			
Hexachloroethanes			51.4
Iron (III) chloride			
Hydrogen Chloride			2.8
			173.6

Source: Elkin, 1969

TABLE 5

Via Vinyl Chloride Process

:e Stream	Compound	kg/Mg of 1,1,1-Trichloroethane
:illation bottoms and ry ends	1,1,2-trichloroethane	51.2
	1,1,1,2-tetrachloroethane	35.3
	1,1,2,2-tetrachloroethane	40.8
	Pentachloroethane	1.8
: from product stream per*	1,2-dichloroethane	0.8
	1,1,1-trichloroethane*	3.9*
: catalyst**	NH_4Cl-$FeCl_3$-NH_3 complex**	2.2**

Via Chlorination of Ethane

:e Stream	Compound	kg/Mg of 1,1,1-trichloroethane
ry ends	1,1-dichloroethane	trace
	1,2-dichloroethane	30.7
	1,1,1-trichloroethane	49.7
	1,1,2-trichloroethane	49.7
	tetrachloroethanes) hexachloroethanes)	51.4

: spent steam stripper waste is also expected to contain small concentrations vinyl chloride, vinylidene chloride and chloroform. Vinyl chloride is expected be present since it is a feedstock constituent. Vinylidene chloride is a product from the dehydrochlorination of 1,1,2-trichloroethane. Chloroform another predicted reaction by-product, and is expected to be formed from splitting off of vinyl chloride monomer and ethane into single carbons, ch are subsequently chlorinated.

: spent catalyst waste is also expected to contain small concentrations of yl chloride feedstock, 1,1,1-trichloroethane product and some polymeric erials. The Agency solicits information as to the presence of these or er compounds in this waste, and notes that hazardous constituent concentions in this waste stream may be too minute to be of regulatory significance.

16

waste quantities are themselves of regulatory concern in light of the hazardous constituents present. Thus, waste mismanagement poses the threat of contaminating large expanses of groundwater, surface water and air, and of reaching large numbers of environmental receptors.

Of the chemicals potentially present in the wastes, 1,2-dichloroethane, 1,1,2-trichloroethane, 1,1,2,2-tetrachloroethane, vinylidene chloride, vinyl chloride and chloroform are on the CAG carcinogen list; 1,1,1-trichloroethane is a suspected carcinogen and 1,1,1-tetrachloroethane is toxic.* Some of these chemicals are also suspected mutagens and teratogens. Should these compounds reach human receptors, the potential for resulting adverse health effects would be extremely high. These constituents are capable of migration. For example, 1,2 dichloroethane, the trichloroethanes, and the tetrachloroethanes all are relatively soluble in water (solubility ranging from 200 ppm - 8700 ppm) (App. B), and thus, these compounds are capable of causing chronic toxicity via a water exposure pathway. Indeed, if they solubilize these compounds could pose a substantial hazard at a level many orders of magnitude less than their solubility limits. In addition, 1,2-dichloroethane and 1,1,2-trichloroethane are fairly volatile as well (vapor pressure 60 mm Hg.)**; thus, 1,1,2-trichloroethane and the tetrachloroethanes may pose a chronic toxicity

*Pentachloroethane poses some threat of chronic exposure via an inhalation pathway, but is not presently considered to pose sufficient danger to be listed as a waste constituent of concern.

**1,1,1 trichloroethane is also volatile, but is expected to photolyse rapidly so probably would not pose a substantial hazard via air inhalation beyond the immediate disposal site (App. B.).

problem via inhalation as well.[47]

These waste constituents are capable of mobility and persistence as well, as shown by numerous damage incidents involving these waste constituents. Chlorinated ethane and ethylene contamination of groundwater in areas adjacent to disposal sites in fact is not uncommon. For example, 1,1,1-trichloroethane has been detected in groundwater in Acton, MA, where residents believe the source is a disposal site at a nearby manufacturing facility.[4] In New Jersey, seepage from landfilled wastes near the CPS Chemical Company also resulted in well contamination by trichloroethylene, tetrachloroethane, and methylene chloride[5]. 1,2-dichloroethane has also been detected in groundwater supplies in Bedford, MA, where the source of contamination has not been positively identified but is believed to be due to industrial uses upstream.[4] Dichloroethanes are among the waste constituents which have migrated from Hooker Chemical's facility at Montague, Mich., contaminating large expanses of ground and surface water.[48] Trichloroethane has also migraged and contaminated private drinking wells in Canton, Connecticut.[48]

Thus, these wastes are capable of causing substantial hazard unless properly managed, and the possibility of mismanagement and environmental release of contaminants is certainly plausible. Some portion of these wastes are expected to be landfilled, while other residue is expected to be incinerated. Improper landfilling -- siting in areas with permeable soils, inadequate leachate control or monitoring, lack of landfill cover, and the like -- could allow waste constituents to leach into groundwater, or escape via volatilization.

Even if plastic lined drums are used for disposal, they represent a potential hazard if the landfill is improperly designed or operated (i.e., drums corrode in the presence of even small amounts of water). The current disposal sites (the Gulf Coast) receive considerable rainfall and have a high ground water table creating a potential for drum corrosion.

Given the presence of the chlorinated ethanes and ethylenes and the potential for drum degradation, it is likely that these wastes, if improperly landfilled (i.e., improperly designed or operated landfill), would come into contact with ground water. This is particularly true of deeper deposits or those in cooler climates where vapor losses will be mimimized. In these two cases, the waste constituents will readily move with the groundwater, just as they have have been observed to do at sites such s Love Canal, the Kin-Buc Landfill, and Story Chemical in Michigan County, Michigan.[49,50,51,52] The above damage incidents support laboratory findings that any released 1,1,2-trichloroethane and 1,2-dichloroethane will pass through sandy soils with less than a 50 percent loss due to volatilization[6].

In addition to landfilling, the 1,1,1-trichloroethane steam stripper bottoms waste stream that is recycled or incinerated is often stored temporarily at the production site. Should leaks occur, similar problems to those from landfills could be expected.

Mismanagement of incinerating operations could result in the release of hazardous vapors, containing among other substances the waste constituents of concern, to the atmosphere and present a signifi-

cant opportunity for exposure of humans, wildlife and vegetation in the vicinity of these operations to potentially harmful substances through direct contact and also through pollution of surface waters.

Finally, should these waste constituents migrate into the environment they can be expected to persist, thus increasing the likelihood of reaching environmental receptors and causing substantial harm. The damage incidents above demonstrate environmental persistence of the released constituents. All of these waste constituents are expected, on the basis of literature degradation values, to persist in groundwater. (1,1,2-Trichloroethane is subject to hydrolysis, but has a hydrolysis half-life of 6 months. 1,1,2-Trichloroethane may also persist in air as well (App. B)). Again, the persistence of these constituents is evidenced by the measurable concentrations of these chemicals in Love Canal leachate some thirty years after disposal.[49.50.51] In any case, in light of the hazardous character of these waste constituents, the Agency could not justify a decision not to list these wastes absent assurance that waste constituents are incapable of migration and persistence. As demonstrated above, such assurance is not possible.

B. Health and Ecological Effects

1. 1,2-Dichloroethane

Health Effects - 1,2-Dichloroethane is a carcinogen;[7] it has also been identified by the Agency as demonstrating substantial evidence of carcinogenicity.[54] In addition, this compound and several of its metabolites are highly mutagenic [8,9]. 1,2-Dichloroethane crosses the placental barrier and is embryotoxic and teratogenic[10-14], and has been shown to concentrate in the milk of

nursing mothers.[15] Exposure to this compound can cause a variety of adverse health effects including damage to the liver, kidneys and other organs, internal hemorrhaging and blood clots[16] 1,2-Dichloroethane is designated a priority pollutant under Section 307(a) of the CWA. Additional information and specific references on adverse health effects of 1,2-dichloroethane can be found in Appendix A.

Ecological Effects - Values for a 96-hour static LC_{50} for bluegills ranged from 236 to 300 mg/l making it moderately toxic.[17]

Regulations - OSHA has set the TWA at 50 ppm. DOT requires the containers for this chemical to carry a warning that it is a flammable liquid.

The Office of Air, Radiation and Noise has completed pre-regulatory assessment of 1,2-dichloroethane under Sections 111 and 112 of the Clean Air Act. Pre-regulatory assessments are also being conducted by EPA's Office of Water and Waste Management under the Safe Drinking Water Act and by the Office of Toxic Substances under the Toxic Substances Control Act.

Industrial Recognition of Hazard - Sax, in Dangerous Properties of Industrial Materials, rates 1,2-dichloroethane as highly toxic upon ingestion and inhalation.

2. 1,1,1-Trichloroethane (Methyl Chloroform)

Health Effects - 1,1,1-Trichloroethane is a suspected carcinogen and, when tested for carcinogenicity by NCI, was found to induce a variety of malignant tumors in two species of rodents.[18] Experiments involving rat embryo cell cultures produced cancers in all of the animals tested.[19] 1,1,1-Trichloroethane was found to be muta-

genic in the Ames Salmonella assay[20] and was shown to cause fetal development abnormalities.[21]

Acute and chronic intoxication of humans have caused severe central nervous system impairment.[22] Animal studies have shown that 1,1,1-trichloroethane causes organ damage to heart, lungs, liver and kidneys.[23] Additional information and specific references on the adverse effects of 1,1,1-trichloroethane can be found in Appendix A.

Ecological Effects - 1,1,1-Trichloroethane is very toxic to aquatic life. Lethal concentrations (96 hour) of 37-58 mg/l were registered for bluegills, 52 mg/l for fathead minnows and 26 mg/l for shrimp.[24]

Regulations - 1,1,1-Trichloroethane is designated as a priority pollutant under Section 307(a) of the CWA. OSHA has set the TWA at 350 ppm. EPA has recommended an ambient water quality criterion at 15.7 mg/l.

Industrial Recognition of Hazard - Sax (Dangerous Properties of Industrial Materials) lists 1,1,1-trichloroethane as moderately toxic via inhalation.

3. 1,1,2-Trichloroethane

Health Effects - 1,1,2-Trichloroethane has been shown to cause cancer in mice;[25] it has also been identified by the Agency as demonstrating substantial evidence of carcinogenicity.[54] There is evidence that 1,1,2-trichloroethane is mutagenic and may be embryotoxic or cause teratogenic effects.[26,27]

Like the other compounds of this type, the trichloroethanes are narcotics that produce central nervous system effects, and can damage the liver, kidney and other organs.[15]

1,1,2-Trichloroethane is designated as a priority pollutant under Section 307(a) of the CWA. Additional information and specific references on the adverse effects of 1,1,2-trichloroethane can be found in Appendix A.

Ecological Effects - Aquatic toxicity data are limited with only three acute studies in freshwater fish and invertebrates, with doses ranging from 10,700 to 22,000 ug/l.[17]

Regulations - OSHA has set the TWA at 10 ppm (skin).

4. Vinylidene Chloride

Health Effects - Vinylidene chloride has been shown to cause cancer in laboratory animals [28,29] and to be mutagenic.[28] It has also been identified by the Agency as demonstrating substantial evidence of carcinogenicity.[54] It is very toxic [LD_{50} (rat) = 200 mg/kg] and chronic exposure can cause damage to the liver and other vital organs as well as causing central nervous system effects. Additional information and specific references on the adverse effects of vinylidene chloride can be found in Appendix A.

Regulations - DOT requires containers to be labeled "flammable liquid." OSHA has set the TWA at 10 ppm.

Industrial Recognition of Hazard - The toxic hazard of vinylidene chloride is suspected of being similar to vinyl chloride which is moderately toxic via inhalation (Sax, Dangerous Properties of Industrial Materials)[30].

5. Vinyl Chloride

Health Effects - Vinyl chloride has been shown to be a

carcinogen in laboratory studies;[31,32,33] it has also been identified by the Agency as demonstrating substantial evidence of carcinogenicity.[54] This finding has subsequently been supported by epidemiological findings.[33-37]

Vinyl chloride is very toxic [LD_{50} (rat) = 500 mg/kg] and acute exposure results in anaesthetic effects as well as uncoordinated muscular activities of the extremities, cardiac arrythmias[38] and sensitization of the myocardium.[39] In severe poisoning, the lungs are congested and liver and kidney damage also occur.[40] A decrease in white blood cells and an increase in red blood cells was also observed, as well as a decrease in blood clotting ability.[41] Vinyl chloride is designated as a priority pollutant under Section 307(A) of the CWA. Additional information and specific references on the adverse effects of vinyl chloride can be found in Appendix A.

Regulations - OSHA has set the TWA at 1 ppm with a 5 ppm ceiling over 15 minutes. DOT requires this to be labeled "flammable gas."

Industrial Recognition of Hazard - A vinyl chloride has a moderate toxic hazard rating via inhalation (Sax, Dangerous Properties of Industrial Materials).

6. Chloroform

Health Effects - Chloroform has been shown to be carcinogenic[42,54] and tangential evidence links human cancer epidemiology with chloroform contamination of drinking water.[43,44] Chloroform has also been shown to induce fetal toxicity and skeletal malformation in rat embryos.[45,46] Chronic exposure causes liver and kidney damage and neurological disorders.[43] Additional information and

specific references on the adverse effects of chloroform can be found in Appendix A.

Ecological Effects - The U.S. EPA has estimated that chloroform accumulates fourteen-fold in the edible portion of fish and shell fish.[43] The U.S. EPA has also recommended that contamination by chloroform not exceed 500 ug/l in freshwater and 620 ug/l in marine environments.[43]

Regulations - Chloroform has been designated as a priority pollutant under Section 307(a) of the CWA. OSHA has set the TWA at 2 ppm. FDA prohibits use of chloroform in drugs, cosmetics and food contact material. The Office of Water and Waste Management has proposed regulation of chloroform under Clean Water Act Section 311 and is in the process of developing regulations under Clean Water Act 304(a). The Office of Air, Radiation and Noise is conducting preregulatory assessment of chloroform under the Clean Air Act. The Office of Toxic Substances has requested additional testing of chloroform under Section 4 of the Toxic Substances Control Act and is conducting pre-regulatory assessment under the Federal Insecticide, Fungicide and Rodenticide Act.

Industrial Recognition of Hazard - Chloroform has been given a moderate toxic hazard rating for oral and inhalation exposures (Sax, Dangerous Properties of Industrial Materials).[30]

7. Tetrachloroethanes

Health Effects - 1,1,2,2-Tetrachloroethane has been shown to produce liver cancer in laboratory mice;[31] it has also been identified by the Agency as demonstrating substantial evidence of carcinogenicity.[54] It is also shown to be very toxic [oral rat

LD_{50} = 200 mg/Kg.]. In addition, passage of 1,1,1,2-tetrachloroethane across the placental barrier has been reported.[29] In Ames Salmonella bioassay 1,1,2,2-tetrachloroethane was shown to be mutagenic.[32] Occupational exposure of workers to 1,1,2,2-tetrachloroethane produced neurological damage, liver and kidney ailments, edema, and fatty degeneration of the hear muscle.[33] Both 1,1,1,2-tetrachloroethane and 1,1,2,2-tetrachloroethane are designated as priority pollutants under Section 307(a) of the CWA. Additional information and specific references on the adverse effects of tetrachloroethanes can be found in Appendix A.

Ecological Effects - Freshwater invertebrates are sensitive to 1,1,2,2-tetrachloroethane with a lethal concentration of 7-8 mg/l being reported.[20] USEPA estimates the BCF to be 18.

Regulations - OSHA has set the TWA at 5 ppm (skin) for 1,1,2,2-tetrachloroethane.

Industrial Recognition of Hazard - Sax, Dangerous Properties of Industrial Materials, lists 1,1,2,2-tetrachloroethane as being highly toxic via ingestion, inhalation and skin absorption.

IV. References

1. 1979 Directory of Chemical Producers United States.
2. Chemical Economics Handbook, Menlo Park, California. December 1978. (May be purchased from SRI.)
3. Synthetic Organic Chemicals, U.S. Production and Sales, U.S. International Trade Commission.
4. Water Quality Issues in Massachusetts, Chemical Contamination, Special Legislative Commission on Water Supply, Sept. 1979
5. Memo from Roy Albert to E.C. Beck, Administrator, EPA Region II, Drinking Water Contamination of New Jersey Well Water, March 31, 1978.
6. Wilson, J.T., and C.G. Enfield, 1979, Transport of Organic Pollutants Through Unsaturated Soil. Presented American Geophysical Union. December 3-7, San Francisco, CA.
7. National Cancer Institute. Bioassay of 1,2-Dichloroethane for Possible Carcinogenicity. U.S. Department of Health, Education and Welfare, Public Health Service, National Institutes of Health, National Cancer Institute, Carcinogenesis Testing Program, DHEW Publication No. (NIH) 78-1305, January 10, 1978.
8. McCann, J., E. Choi, E. Yamasaki, and B. Ames. Detection of Carcinogens as Mutagenic in the Salmonella/Microsome Test: Assay of 300 Chemicals. Proc. Nat. Acad. Sci. USA 72(2):5135-5139, 1975a.
9. McCann, J., V. Simmon, D. Streitwieser, and B. Ames. Mutagenicity of Chloracetaldehyde, a Possible Metabolic Product of 1,2-Dichloroethane (ethylene dichloride), Chloroethanol (ethylene chlorohydrin), Vinyl chloride, and Cyclophosphamide. Proc. Nat. Acad. Sci. 72 (8):3190-3193.

10. Vozovaya, M., Changes in the Esterous Cycle of White Rats Chronically Exposed to the Combined Action of Gasoline and Dichloroethane Vapors. Akush. Genecol. (Kiev) 47 (12): 65-66, 1971.

11. Vozovaya, M., Development of Offspring of Two Generations Obtained from Females Subjected to the Action of Dichloroethane. Gig. Sanit. 7:25-28, 1974.

12. Vozovaya, M., The Effect of Low Concentrations of Gasoline, Dichloroethane and Their Combination on the Generative Function of Animals and on the Development of Progeny. Gig. Tr. Prof. Zabol. 7:20-23, 1975.

13. Vozovaya, M., Effect of Low Concentrations of Gasoline, Dichloroethane and Their Combination on the Reproductive Function of Animals. Gig. Sanit. 6:100-102, 1976.

14. Vozovaya, M.A., The Effect of Dichloroethane on the Sexual Cycle and Embryogenesis of Experimental Animals. Akush. Genecol. (Moscow) 2:57-59, 1977.

15. Urusova, T.P. (About a possibility of dichloroethane absorption into milk of nursing women when contacted under industrial conditions.)

16. Parker, J.C., et al. 1979. Chloroethanes: A Reveiw of Toxicity. Amer. Indus. Hyg. Assoc. J., 40: A 46-60, March 1979.

17. U.S. EPA, 1979. Chlorinated Ethanes: Ambient Water Quality Criteria (Draft).

18. NCI, 1977. Bioassay of 1,1,1-Trichloroethane for Possible Carcinogenicity. Carcing. Tech. Rep. Ser. NCI-CG-TR-3.

19. Price, P.J., et al. 1978. Transforming Activities of Trichloroethane and Proposed Industrial Alternatives.

20. U.S. EPA Report, 1980, In Vitro, 14:290. In Vitro Microbiological Mutagenicity of 81 Compounds.

21. Schwetz, B.A., et al. 1974. Embryo and Fetal Toxicity of Inhaled Carbon Tetrachloride, 1,1-Dichloroethane and Methyl Chloroform in Rats. Toxicol. Appl. Pharmacol. 28:452.

22. Stahl, C.J., et al. 1969. Trichloroethane Poisoning. Observations on the Pathology and Toxicology of Six Fatal Cases. Jour. Forensic Sci., 14:393.

23. Walter P., Chlorinated Hydrocarbon Toxicity, a Monograph. PB-257185 National Technical Information Service, Springfield, Virginia.

24. U.S. EPA, 1979. In-Depth Studies on Health and Environmental Impact of Selected Water Pollutants. Contract No. 68-01-4646.

25. Chlorinated Solvents, Lloyd Elkin. February 1969. (May be purchased from SRI.)

26. Elovaara, E., et al. Effects of CH_2Cl_2, CH_3Cl_3, TCE, Perc and Toluene in the Development of Chick Embryos, Toxicology 12: 111-119, 1979.

27. Parker, J.C., I.W.F. Davidson and M.M. Greenberg, EPA Health Assessment Report of 1,2-Dichloroethane (Ethylene Dichloride). In preparation.

28. Environmental Health Perspectives, 1977, Vol. 21, 333 pp.

29. Van Duuren, B.L., et al. 1979. Carcinogenicity of Halogenated Olefinic and Aliphatic Hydrocarbons in Mice. J. Nat. Cancer Inst. 63(6): 1433-1439.

30. Sax, N.I., Dangerous Properties of Industrial Materials.

31. Viola, P.L., et al., Oncogenic Response of Rat Skin, Lungs, and Bones to Vinyl Chloride. Cancer Res. 31: 516, 1971.

32. Maltoni, C., and G. Lefemine, Carcinogenicity Bioassays of Vinyl Chloride. Am. NY Acad. Sci. 246:195 (1975).

33. Lee, F.I., and Harry, D.S., Angiosarcoma of the Liver in a Vinyl Chloride Worker. Lancet 1: 1316 (1974).

34. Creech & Johnson, Angiosarcoma of the Liver in the Manufacture of Polyvinyl Chloride. Jour. Occup. Med. 16:150, 1974.

35. Falk, H., et al. Hepatic disease among workers at a Vinyl Chloride Polymerization Plant. Jour. Amer. Med. Assoc. 230:59 (1974).

36. Makk, L., et al. Liver Damage and Liver Angiosarcoma in Vinyl Chloride Workers. Jour. Amer. Med. Assoc. 230:64 (1974).

37. Tabershaw, I.R., and Gaffey, W.R., Mortality Study of Workers in the Manufacture of Vinyl Chloride and its Polymers. Jour. Occup. Med. 16:509 (1974).

38. Oster, R.H., et al. Anesthesis, XXVII, Narcosis with Vinyl Chloride Anesthesiology 8: 359, 1947.

39. Carr, J., et al. Anesthesis XXIV. Chemical Constitution of Hydrocarbons and Cardiac Automaticity. J. Pharmacol. 97:1 (1949).

40. Torkerson, T.R., et al. The Toxicity of Vinyl Chloride by Repeated Exposure of Laboratory Animals - Amer. Ind. Hyg. Assoc. Jour. 22:354 1961.

41. Lester, D., et al. Effects of Single and Repeated Exposures of Humans and Rats to Vinyl Chloride. Amer. Ind. Hyg. Assoc. Jour. 24:265, 1963.

42. National Cancer Institute, 1976. Report on Carcinogenesis Bioassay of Chloroform. National Technical Information Service, PB-264018. Springfield, Virginia.

43. U.S. EPA, 1979. Trichloromethane (Chloroform) Hazard Profile, USEPA/ECAO, Cincinatti, Ohio 45268. 1979.

44. McCabe, L.J., 1975. Association Between Trihalomethanes in Drinking Water (NORS Data) and Mortality. Draft Report. U.S. EPA.

45. Schwetz, B.A., et al. 1974. Embryo and Fetotoxicity of Inhaled Chloroform in Rats. Toxicol. Appl. Pharmacol. 28:442.

46. Thompson, D.J., et al.1974. Teratology Studies on Orally Administered Chloroform in the Rat and Rabbit. Toxicol. Appl. Pharmacol. 29:348.

47. Dawson, English, and Petty, 1980. "Physical Chemical Properties of Hazardous Waste Constituents", Table 1.

48. EPA, Hazardous Waste Division, Technology and Management Assessment Branch, "Annual Study of Personal Injury, Economic Damage or Fatalities from Hazardous Waste", 1978.

49. Barth, E. F., Cohen, J. M., "Evaluation of Treatability of Industrial Landfill Leachate", unpublished report, U.S. EPA, Cincinnati, November 30, 1978.

50. O'Brien, R. P., City of Niagra Falls, New York, Love Canal Project, unpublished report. Calgon Corp., Calgon Environmental Systems Division, Pittsburgh, Pennsylvania.

51. Rcera Research, Inc. Priority Pollutant Analyses prepared for Nuco Chemical Waste Systems, Inc., unpublished report, Tonawanda, New York, April, 1979.

52. Sturino, E., Analytical Results: Samples From Story Chemicals, Data Set Others 336", unpublished data, U.S. EPA Region 5, Central Regional Laboratories, Chicago, Illinois, May, 1978.

53. Source Assessment Chlorinated Hydrocarbons Manufacture. EPA-600/2-78-004.

LISTING BACKGROUND DOCUMENT

TRICHLOROETHYLENE AND PERCHLOROETHYLENE PRODUCTION

Column bottoms or heavy ends from the combined production of trichloroethylene and perchloroethylene (T)

Summary of Basis for Listing

The column bottoms or heavy ends from the combined production of trichloroethylene and perchloroethylene are generated when recycling streams from the chlorination and oxychlorination processes become contaminated and must be removed and disposed. The Administrator has determined that these heavy ends are solid wastes which may pose a present or potential hazard to human health and the environment when improperly transported, treated, stored, disposed of or otherwise managed and therefore should be subject to appropriate management requirements under Subtitle C of RCRA. This conclusion is based on the following consideration:

(1) The column bottoms or heavy ends from combined trichloroethylene and perchloroethylene production contain significant concentrations of 1,1,2,2-tetrachloroethane, hexachlorobutadiene, and hexachlorobenzene, each of which are carcinogenic. Also, 1,1,2,2-tetrachloroethane is a known mutagen. All of these substances are also toxic to aquatic life and bioaccumulate in living tissues. In addition, the waste contains smaller amounts of ethylene dichloride, hexachloroethane and 1,1,1,2 tetrachloroethane, all substances with carcinogenic and/or mutagenic properties.

(2) A large quantity (a combined estimated total of at least 15,000 metric tons) of these wastes is generated annually.

(3) The wastes are disposed of primarily through incineration or landfilling. Smaller amounts are deep well injected into limestone formations. If not managed properly, these hazardous contaminants could be emitted to the air from inadequate incineration or improper land disposal or leach from landfills and injection wells to expose humans and other life. The chlorinated organics 1,1,2,2-tetrachloroethane, hexachlorobutadiene, and hexachlorobenzene, as well as ethylene dichloride, are water soluble and therefore could migrate from the wastes to contaminate groundwater in concentrations sufficient to cause substantial hazard.

Industry Profile[1,2,3,4]

Perchloroethylene and trichloroethylene are produced in a combined process by seven companies at ten manufacturing locations primarily situated in the Texas and Louisiana Gulf area. The location of the facilities, their annual production capacity, and estimated 1979 production are shown in Table 1 and Figure 1. As shown in Table 1, the estimated 1979 production for perchloroethylene and trichloroethylene are 367,500 and 125,300 MT, respectively. The annual production levels for each individual plant are variable and range from 12,600 to 63,700 MT for perchloroethylene producers and 14,000 - 63,700 MT for manufacturers of trichloroethylene. Average annual per plant production figures are 36,750 MT for perchloroethylene and 41,400 MT for trichloroethylene.

There currently is excess capacity within this industry for both the production of perchloroethylene and trichloroethylene. Increased regulatory pressures from both the Environmental Protection Agency (EPA) and the Occupational Safety and Health

ESTIMATED CAPACITY AND PRODUCTION

PERCHLOROETHYLENE AND TRICHLOROETHYLENE

COMPANY	LOCATION	1979 CAPACITY (MT/YR)[B] PERCHLOROETHYLENE	1979 CAPACITY (MT/YR)[B] TRICHLOROETHYLENE	1979 PRODUCTION (MT/YR) PERCHLOROETHYLENE	1979 PRODUCTION (MT/YR) TRICHLOROETHYLENE
Diamond Shamrock	Deer Park, TX	75,000	A	52,500	
Dow	Freeport, TX	68,000	68,000	47,600	47,600
	Pittsburg, CA	18,000		12,600	
	Plaquemine, LA	54,000		37,800	
Dupont	Corpus Christi, TX	73,000		51,100	
Ethyl	Baton Rouge, LA	23,000	20,000	16, 100	14,000
PPG	Lake Charles, LA	91,000	91,000	63,700	63,700
Stauffer	Louisville, KY	32,000		22,400	
Vulcan	Geismar, LA	68,000		47,600	
	Wichita, KS	23,000		16,100	
	TOTAL	525,000	179,000	367,500	125,300

[A] 23,000-MT/yr. capacity unit placed on standby in early 1978
[B] MT = Metric tons
SOURCE: References 1, 2, 3, 4

FIGURE 1

LOCATIONS OF PLANTS MANUFACTURING
PERCHLOROETHYLENE AND TRICHLOROETHYLENE

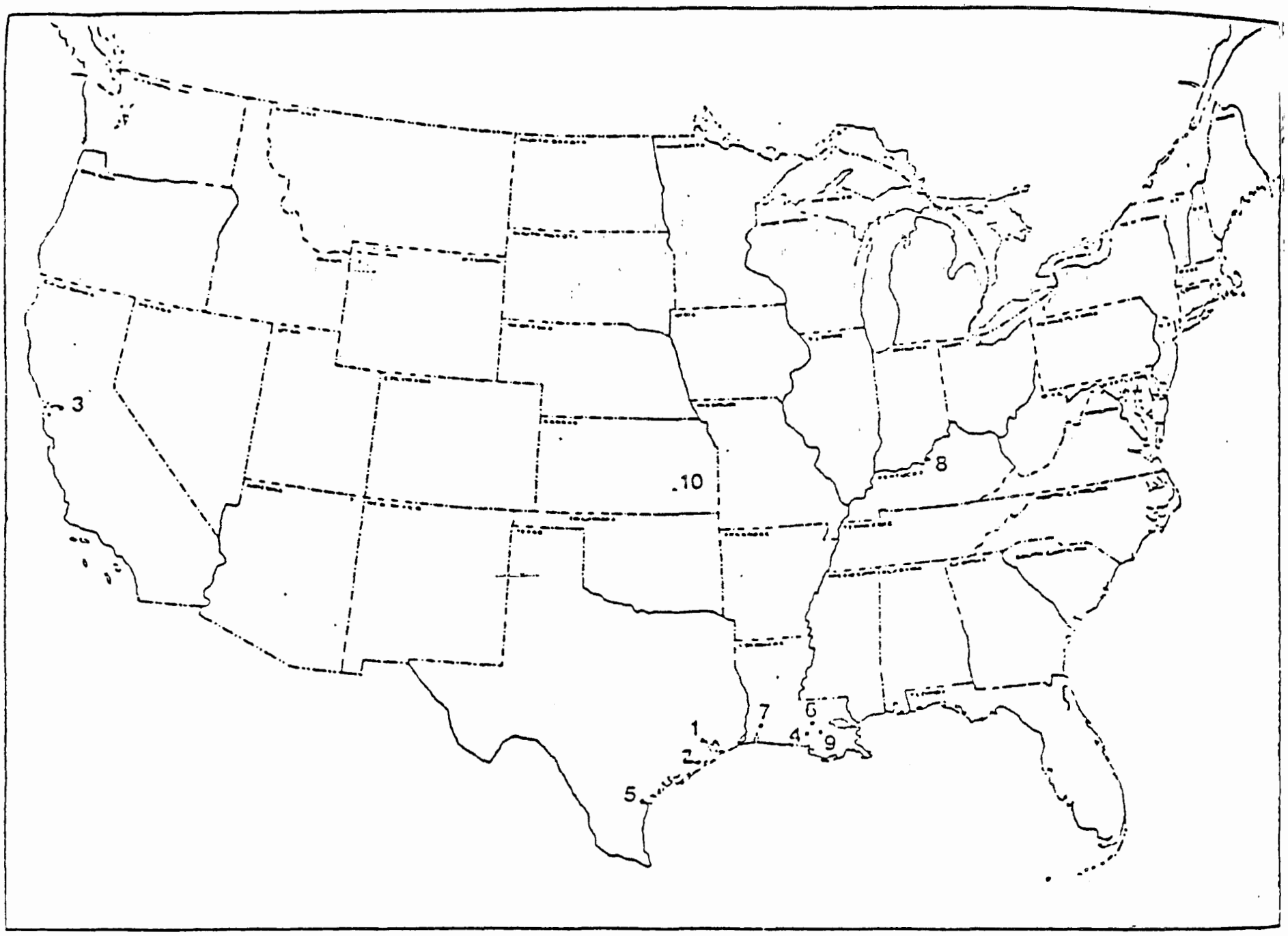

		Chemicals Produced*
1)	Diamond Shamrock Corp., Deer Park, TX	A
2)	Dow Chemical Co., Freeport, TX	A,B
3)	Dow Chemical Co., Pittsburg, CA	A
4)	Dow Chemical Co., Plaquemine, LA	A
5)	DuPont, Corpus Christi, TX	A
6)	Ethyl Corp., Baton Rouge, LA	A,B
7)	PPG Industries, Inc., Lake Charles, LA	A,B
8)	Stauffer Chemical Co., Louisville, KY	A
9)	Vulcan Materials Co., Geismar, LA	A
10)	Vulcan Materials Co., Wichita, KS	A

*A = perchloroethylene, B = trichloroethylene

SOURCE: Reference 9

Administration (OSHA) are serving to inhibit future growth in demand for these chemicals. It is anticipated that short- and long-term growth will average 1-2% and that the industry output can be represented by a flat growth curve.

Manufacturing Process[3]

Perchloroethylene and trichloroethylene are produced either separately or as co-products by either the chlorination or oxychlorination of ethylene dichloride or other C_2-chlorinated hydrocarbons. The ratio of raw material feed determines the relative yields of perchloroethylene and trichloroethylene. Perchloroethylene is also produced by the chlorinolysis of light hydrocarbons with by-product production of carbon tetrachloride.

This listing document covers wastes generated by the co-production process.

° Direct Chlorination of Ethylene Dichloride (See Figure 2)

Perchloroethylene and trichloroethylene are produced by a single-stage oxychlorination process from ethylene dichloride and chlorine. Ethylene dichloride, chlorine, oxygen, and recycled chlorinated organics are fed to a fluid bed reactor. An inexpensive oxychlorination catalyst (e.g., copper chloride) is used and the reactor is maintained under pressure and at about 425°C. Feed adjustments may be employed to vary product

FIGURE 2

DIRECT CHLORINATION OF ETHYLENE DICHLORIDE

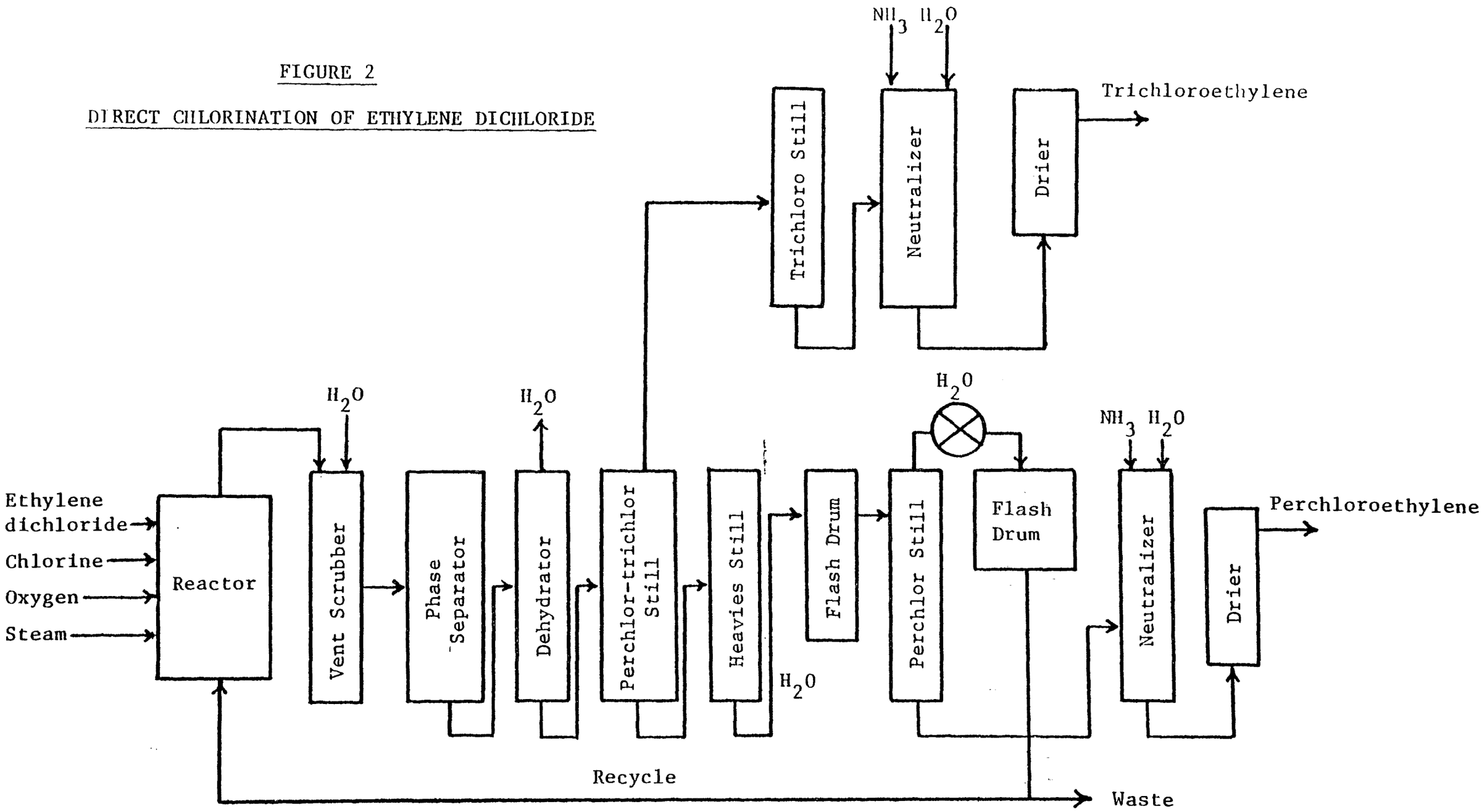

Reaction

$$2C_2H_4Cl_2 + 5Cl_2 \rightarrow C_2H_2Cl_4 + C_2HCl_5 + 5HCl$$

$$C_2H_2Cl_4 + C_2HCl_5 \rightarrow C_2HCl_3 + 2HCl + C_2Cl_4$$

$$7HCl + 1.75O_2 \rightarrow 3.5H_2O + 3.5Cl_2 \text{ (Deacon)}$$

$$2C_2H_4Cl_2 + 1.5Cl_2 + 1.75O_2 \rightarrow C_2HCl_3 + C_2Cl_4 + 3.5H_2O$$

85 to 90% yield

SOURCE: Reference 3.

ratios, depending upon producer requirements.

The condensed crude and weak acid are then phase-separated with the crude, being dried by azeotropic distillation. In the perchlor-trichlor column, the crude is split into two streams, one trichlor-rich and the other perchlor-rich. The perchlor-rich stream, containing midboilers and heavies, is fed to the heavies column where high boilers (1,1,2,2- and 1,1,1,2-tetrachloroethane, pentachloroethane, hexachloroethane, dimers, tar and carbon) are removed as bottoms and flashed to remove tars and carbon. Midboilers are concentrated in the overheads and recycled. Perchlor recovered from the bottoms of the still is neutralized with ammonia, washed, and dried.

The crude trichlor stream is fed to the trichlor product still, where low boilers, such as dichloroethylenes, are removed overhead and recycled to the reactor. Trichlor is removed from the bottom, neutralized with ammonia, washed, and dried.

This process description is an example of one of several processes for the manufacture of perchloroethylene and trichloroethylene from ethylene dichloride. Similar waste constituents (i.e., a range of chlorinated organic hydrocarbons, including 1,1,2,2-tetrachloroethane, hexachlorobutadiene, and hexachlorobenzene), are expected regardless of the process.

Waste Generation and Management

1. Waste Generation

The column bottoms or heavy ends from the combined production of perchloroethylene and trichloroethylene can contain a wide variety of chlorinated hydrocarbons. A typical chemical composition for the waste stream, often referred as hex waste, is shown in Table 2 with composition presented in terms of weight and mole percent.[2,9] This information indicates that the primary constituents of the waste stream are 1,1,2,2-tetrachloroethane, hexachlorobutadiene, and hexachlorobenzene. (Table 2 also includes solubilities of the waste stream constituents.)[2,9,20]

The information presented in Table 2 was employed to calculate the expected quantities of each hazardous component which is generated on an annual basis. Personal communications[5,6,7] with selected chemical manufacturers and a review of the available literature indicate that the quantity of still bottoms which becomes contaminated and must be disposed can approach 3-5 percent of production. Assuming that these wastes are generated at a rate of 3% of production, the estimated quantity of each component is presented in Table 3. The estimated annual generation rates are shown to range from 88-4996 metric tons for the individual waste components.

2. Waste Management [5,6,7]

Additional information was collected to assess the current practices employed for handling these waste streams on an

TABLE 2

TYPICAL COMPOSITION OF HEX-WASTES

	MOLE %	WEIGHT %	SOLUBILITY g/100g distilled water	in PPM*
ylene Dichloride	1.4	0.6	.80	8,000
a-Trichloroethane	7.2	4.5	.50	5,000
chloroethylene	5.7	4.5	.01	100
,1,2-Tetrachloroethane	7.9	6.3	.01	100
,2,2-Tetrachloroethane	29.1	23.0	.29	2,900
tachloroethane	2.7	3.3	<.05	<500
achlorobutadiene	27.5	33.8	.0000005	0.005
achlorobenzene	14.9	20.0	<.05	<500
achloroethane	3.6	4.0		Very low
TOTAL	100.0	100.0		

RCE: References 2,9

onverted to PPM, Value = g/100g x 10^4

SOLUBILITY OF PARTICULAR HEX WASTE CONSTITUENTS IN PPM (DISTILLED WATER)

ylene Dichloride	8,690
a-Trichloroethane	4,500
chloroethylene	150 - 200
,2,2-Tetrachloroethane	2,900
achlorobutadiene	2
achlorobenzene	0.006 - 0.020
achloroethane	50

RCE: Reference 20

Table 3

PROJECTED QUANTITIES OF INDIVIDUAL HEX-WASTE COMPONENTS

	MOLE %	WEIGHT %	ANNUAL PRODUCTION
Hexachlorobutadiene	27.5	33.8	4,996
1,1,2,2-Tetrachloroethane	29.1	23.0	3,400
Hexachlorobenzene	14.9	20.0	2,956
1,1,1,2-Tetrachloroethane	7.9	6.3	931
Hexachloroethane	3.6	4.0	591
Ethylene Dichloride	1.4	0.6	88
Perchloroethylene	5.7	4.5	665
beta-Trichloroethane	7.2	4.5	665
Pentachloroethane	2.7	3.3	448
TOTAL	100.0	100.0	14,780

SOURCE: Estimate based on Table 2 and waste generation rate of 3% of production. (Waste streams are, however, subject to variation in terms of both composition and rate of generation.)

individual basis. The available information indicates that these wastes are either being incinerated or disposed of through landfill or deep well injection into limestone formations. Table 4 identifies the estimated quantities of waste being generated at each production facility and the current procedures for disposing of these wastes. As shown in Table 4, approximately 70% of the wastes are incinerated, with 22% going to landfill and 7% to deep well injection.

D. Hazards Posed by Waste

As noted above, most of these hex wastes are incinerated. Inadequate incineration conditions -- i.e., temperature and residence times--can result in the airborne disposal of uncombusted chlorinated organics, partially combusted organics and newly formed organic compounds. Phosgene is an example of a partially combusted chlorinated organic which is produced by the decomposition or combustion of chlorinated organics by heat.(10,11,12) Phosgene has been used as a chemical warfare agent and is recognized as extremely toxic.

The landfilling of column bottoms or heavy ends in an unsecure land disposal facility may result in groundwater contamination caused by migration of the toxic chlorinated organics from the waste into the surrounding environment. The most carcinogenic wastestream pollutant, 1,1,2,2-tetrachloroethane, is highly soluble in water, as shown in Table 2. Ethylene dichloride, another carcinogen found in the wastestream, is even more soluble and thus would also tend to migrate

TABLE 4

WASTE GENERATION RATES AND MANAGEMENT PROCEDURES

Company	Location	Waste Production MT	Current Disposal Practice
Diamond Shamrock Corporation	Deer Park, TX	1,570	LF
Dow Chemical U.S.A.	Freeport, TX	2,850	I
	Pittsburg, CA	370	I
	Plaquemine, LA	1,130	I
E.I. DuPont de Nemours Company, Inc.	Corpus Christi, TX	1,530	I
Ethyl Corporation	Baton Rouge, LA	940	DWI
PPG Industries	Lake Charles, LA	3,820	I
Stauffer Chemical Company	Louisville, KY	670	LF
Vulcan Material Company	Geismar, LA	1,420	I
	Wichita, KS	480	I
	TOTAL	14,780	

I - Incineration
DWI - Deep Well Injection
LF - Landfill

SOURCE: References 5, 6, 7

from the waste. The remaining chlorinated organics in the waste stream are also water soluble to some extent (see Table 2). These compounds also have demonstrated potential for mobility through soils and persistence in groundwater.[17] (See also information summarized at pp. 15-20 below.) Thus, it appears likely that hazardous constituents may escape from this waste stream and contaminate groundwater. There clearly is insufficient justification to warrant finding that waste constituents will not migrate into groundwater if improperly managed. It should be noted that many facilities generating these wastes are located in the Texas and Louisiana Gulf area (see Figure 1) where rainfall precipitation is heavy, so that the wastes are exposed regularly to solubilizing media.

Another problem with the landfilling of these wastes is the potential for these contaminants, particularly hexachlorobenzene, to volatilize into the surrounding atmosphere. An actual damage incident confirms this risk. In the Louisiana area in the early 1970's, hex wastes containing hexachlorobenzene (HCB), a relatively volatile material, were transported over a period of time to municipal landfills in uncovered trucks. High levels of HCB have since been reported in the blood plasma of individuals along the route of transport[8]. In a sampling of 29 households along the truck route, the average plasma level of HCB was 3.6 ppb with a high of 23 ppb, while the average plasma level of HCB in a control group was 0.5 ppb with a high of 1.8 ppb (Farmer et. al., 1976).

Additionally, cattle in the surrounding area absorbed HCB in their tissue and 20,000 animals were quarantined by the State Department of Agriculture (Lazar 1975)[8].

The deep well injection of these wastes in permeable limestone formations is also practiced by the industry and could result in the migration of the hazardous constituents from the waste and present the same type of problems presented when these wastes are insecurely landfilled.

An additional reason for listing these wastes as hazardous are the large volumes generated annually. The estimated quantities of hex wastes disposed of by each producer range from 370 to 3,820 metric tons per year (Table 4). This is a significant quantity of waste disposal by individual generators in the same area. It is expected that producers will use the same disposal facility for long periods of time, causing more exposure over longer time periods to populations in the same disposal facility areas if wastes are improperly managed. Also, more exposure would be expected along prevalent migration and transport routes.

Additional health and environmental fate information on the listed constituents of concern is presented in the following section of this document. In general, this information indicates qualitatively that these constituents are sufficiently mobile and persistent to reach environmental receptors. In light of the extreme dangers to human health and the environment posed by these constituents, there is insufficient indication of environmental degredation to justify a failure to list this waste as hazardous.

Health and Ecological Effects

1. Hexachlorobenzene (HCB)

Priority Pollutant - HCB is currently listed as a priority pollutant under Section 307(a) of the Clean Water Act.

Health Effects - Hexachlorobenzene (HCB) has produced cancers in animal species.[13,14] Other animal studies have shown that HCB crosses the placental barrier to produce toxic effects and fetal mortality.[15] Hexachlorobenzene is stored for long periods in body fat. Chronic exposure to HCB has been shown to result in damage to the liver and spleen.[16] It has also been demonstrated that at doses far below those which are lethal, HCB enhances the body's capability to toxify, rather than detoxify, other foreign organic compounds present in the body.[17]

Virtually all hexachlorobenzene emitted from an uncontrolled landfill is expected to persist in groundwater or reach surface waters via groundwater movement.[18] Such behavior is likely to result in exposure to humans using potable water supplies within the exposed adjacent areas.

The recommended ambient criterion[19] level for HCB in water is 1.25 nanograms per liter. Actual measurements, on the other hand, of finished drinking water in certain geographic areas have been measured at levels six times the recommended criterion designed to protect human health, demonstrating the mobility and persistence of the material (See Appendix A.)

Ecological Effects - Hexachlorobenzene is very persistent. It has been reported to move through the soil into the groundwater.[21] Movement of hexachlorobenzene within surface water systems is projected to be widespread.[18] Movement to this degree will likely result in exposure to aquatic life forms in rivers, ponds, and reservoirs. Similarly, potential exposure to humans is likely where water supplies are drawn from surface waters.

Hexachlorobenzene is likely to contaminate accumulated bottom sediments within surface water systems and bioaccumulate in fish and other aquatic organisms.[18]

Regulatory Recognition of Hazard - As indicated in Appendix A, hexachlorobenzene is a chemical evaluated by CAG as having substantial evidence of carcinogenicity. Ocean dumping of hexachlorobenzene is prohibited. An interim food contamination tolerance of 0.5 ppm has been established by FDA.

Additional information on the adverse effects of hexachlorobenzene can be found in Appendix A.

2. Hexachlorobutadiene (HCBD)

Priority Pollutant - Hexachlorobutadiene is a priority pollutant under Section 307(a) of the FWPCA.

Health Effects - Hexachlorobutadiene (HCBD) has been found to be carcinogenic in animals.[22] Upon chronic exposure to animals by the DOW Chemical Company and others, the kidney appears to be the organ most sensitive to HCBD.[22,23,24,25] The recommended human health criterion level for this compound

in water, is .77 ppb. (See 44 Fed. Reg. 15926, 15954 (March 15, 1979).)

Virtually all HCBD emitted from the waste management scenario described previously is expected to persist in groundwater or reach surface waters via groundwater movement.(18) Such behavior is likely to result in exposure to humans using such groundwater sources as drinking water supplies within adjacent areas.

Ecological Effects - Movement of HCBD within surface water systems is projected to be widespread.(18)

HCBD is likely to contaminate accumulated bottom sediments within surface water systems and is likely to bioaccumulate in fish and other aquatic organisms.(18)

The USEPA (1979) has estimated that the BCF is at 870 for the edible portion of fish and shellfish consumed by Americans.

Hexachlorobutadiene is persistent in the environment.(20) It has been reported to move through soil into groundwater from Hooker Chemical's Hyde Park waste disposal site,* and thus is mobile enough to migrate from improperly managed landfills into the environment.

Industrial Recognition of Hazard - Hexachlorobutadiene is considered to have a high toxic hazard rating via both oral and inhalation routes (Sax, Dangerous Properties of Industrial Materials).

Additional information on the adverse effects of hexa-

*OSW Hazardous Waste Division, Hazardous Waste Incidents, Unpublished, Open File, 1978.

chlorobutadiene can be found in Appendix A.

3. Hexachloroethane

Priority Pollutant - Hexachloroethane is a priority pollutant under Section 307(a) of the FWPCA.

Health Effects - Hexachloroethane has been reported to be carcinogenic to animals, meaning that humans may be similarly affected.[27] Humans exposed to vapors at low concentrations for short periods have had liver, kidney and heart degeneration and central nervous system damage.[28]

Virtually all hexachloroethane emitted from a landfill is expected to persist in groundwater or reach surface waters via groundwater movement.[18] Such behavior is likely to result in exposure to humans using such groundwater sources as drinking water supplies within adjacent areas.

Ecological Effects - Movement of hexachloroethane within surface water systems is projected to be widespread.[18] Movement to this degree will likely result in exposure to aquatic life forms in rivers, ponds, and reservoirs.

Hexachloroethane is likely to be released to the atmosphere from surface water systems.[18]

Regulatory Recognition of Hazard - OSHA has set a TWA for hexachloroethane at 1 ppm (skin). Measurements of this compound in finished drinking water have shown that hexachloroethane occurs at least at the recommended water criterion level,[28] confirming that this compound may persist in

dangerous concentrations.

Additional information on the adverse effects of hexachloroethane can be found in Appendix A.

4. Tetrachloroethanes

Priority Pollutant - Both 1,1,1,2-tetrachloroethane and 1,1,2,2-tetrachloroethane are designated as priority pollutants under Section 307(a) of the FWPCA.

Health Effects - 1,1,2,2-Tetrachloroethane has been shown to produce liver cancer in laboratory mice.(29) In addition, passage of 1,1,1,2-tetrachloroethane across the placental barrier has been reported.(30) In an Ames Salmonella bioassay, 1,1,2,2-tetrachloroethane was shown to be mutagenic.(31) Occupational exposure of workers to 1,1,2,2-tetrachloroethane produced neurological damage, liver and kidney ailments, lung edema and fatty degeneration of the heart muscle.(32)

Ecological Effects - Freshwater invertabrates are sensitive to 1,1,2,2-tetrachloroethane with a lethal concentration of 7-8 mg/l being reported.(33) USEPA estimates the BCF to be 18.(33)

Regulations - OSHA has set the TWA at 5 ppm (skin) for 1,1,2,2-tetrachloroethane.

Additional information on the adverse effects of tetrachloroethanes can be found in Appendix A.

6. Ethylene Dichloride

Priority Pollutants - Ethylene dichloride (1,2-dichloroethane) is designated as a priority pollutant under Section 307(a) of

the FWPCA.

Health Effects - Ethylene dichloride has been shown to cause cancer in laboratory animals.[34] In addition, this compound and several of its metabolites are highly mutagenic.[35] Ethylene dichloride crosses the placental barrier and is embryotoxic and teratogenic.[36,37,38,39,40] It has also been shown to concentrate in milk.[41] Exposure to this compound can cause a variety of adverse health effects including damage to the liver, kidneys and other organs. It can also cause internal hemorrhaging and blood clots.[42]

Regulatory Recognition of Hazard - OSHA has set the TWA at 50 ppm. The Office of Air, Pollution and Noise has completed a preregulatory assessment for ethylene dichloride under Sections 111 and 112 of the Clean Air Act. Preregulatory assessments are also being conducted by EPA's Office of Water and Waste Management under the Safe Drinking Water Act and by the Office of Toxic Substances under the Toxic Substances Control Act.

Industrial Recognition of Hazard - Sax in Dangerous Properties of Industrial Materials rates ethylene dichloride as highly toxic upon ingestion and inhalation.

Additional information on the adverse effects of ethylene dichloride can be found in Appendix A.

References

1. Chemical Profiles, Schnell Publishing Company, Inc., New York, New York.

2. "Emission Control Options for the Synthetic Organic Chemicals Manufacturing Industy: Carbon Tetrachloride and Perchloroethylene," EPA, Office of Air Quality Planning and Standards. Contract Number 68-02-2257.

3. Lowenhein, F. A., and Moran, M. K., Faith, Keyes, and Clark's Industrial Chemicals, 4th Ed., Wiley Interscience, 1975.

4. TRW, "Assessment of Industrial Hazardous Waste Practice: Organic Chemicals, Pesticides, and Explosives," USEPA, SW-118c, January 1976.

5. Personal communication with Dr. H. Farber, Dow Chemical Company, Midland, Michigan, February 1980.

6. Personal communication with Mr. Perry Norling, DuPont Co., Wilmington, Delaware, February 1980.

7. Personal communication with Dr. Frederick C. Dehn, PPG Industries, Pittsburgh, Pennsylvania, February 1980.

8. OSW - Hazardous Waste Management Division - "Hazardous Waste Incidents": Unpublished Open File Data, 1978.

9. Emmission Control Options for the Synthetic Organic Chemical Manufacturing Industry: 1,1,1-trichloroethane Product Report," EPA, Office of Air Quality Planning and Standards, July 1979, Contract Number 68-02-2577.

10. Combustion Formation and Emission of Traces Species", John B. Edwards, Ann Arbor Science, 1977.

11. NIOSH Criteria for a Recommended Standard: Occupational Exposure to Phosgene, HEW, PHS, CDC, HIOSH, 1976.

12. Cabral, J. R. P., et al. Carcinogenic activity of Hexachlorobenzene in hamsters. Tox. Appl. Pharmacol. 41:155 (1977).

13. Cabral, J. R. P., et al. 1978. Carcinogenesis study in mice with hexachlorobenzene. Toxicol. Appl. Pharmacol. 45:323.

14. Grant, D. L. et al. 1977. Effect of hexachlorobenzene on reproduction in the rat. Arch. Environ. Contam. Toxicol. 5:207.

15. Grant, et. al., 1977.

16. Koss, G., et al., 1978. Studies on the toxicology of hexachlorobenzene. III. Observations in a long-term experiment. Arch. Toxicol. 40:285.

17. Carlson, G. P., 1978. Induction of cytochrome P-450 by halogenated benzenes. Biochem. Pharmacol. 27:361.

18. Technical Support Document for Aquatic Fate and Transport Estimates for Hazardous Chemical Exposure Assessments. 1980. USEPA, Environmental Research Lab., Athens, Georgia.

19. U.S. EPA. Chlorinated Benzenes: Ambient Water Quality Criteria, 1979.

20. U.S. EPA. 1979. Water-Related Environmental Fate of 129 Priority Pollutants. EPA-440/4-79-029b.

21. Zoeteman, B., et. al., 1979. Persistent Organic Pollutants in River Water and Ground Water of the Netherlands. Presented at 3rd International Symposium on Aquatic Pollutants, October 15-17, 1979. Jekyll Island, Georgia.

22. Kociba, R. J., Results of a Two-year Chronic Toxicity Study with Hexachlorobutadiene in Rats. Amer. Ind. Hyg. Assoc. 38: 589, 1977.

23. Kociba et. al. Toxicologic Study of Female Rats Administered Hexachlorobutadiene or Hexachlorobenzene for 30 Days. DOW Chemical Company, 1971.

24. Schwetz, et. al., Results of a Reproduction Study in Rats Fed Diets Containing Hexachlorobutadiene. Toxicol. Appl. Pharmacol. 42:387, 1977.

25. Schroit, et. al., Kidney Lesions Under Experimental Hexachlorobutadiene Poisoning. Aktual, Vpo. Gig. Epidemiol. 73. CA:81:73128F (translation), 1972.

26. Li, et. al., Sampling and Analysis of Selected Toxic Substances. Task 1B- Hexachlorobutadiene. EPA-560/6-76-015. USEPA, 1976.

27. National Cancer Institute. Bioassay of Hexachloroethane for Possible Carcinogenicity. No. 78-1318, 1978.

28. U.S. EPA. Chlorinated Ethanes: Ambient Water Quality Criteria, 1979.

29. National Cancer Institute. Bioassay of 1,1,2,2-Tetrachloroethane for Possible Carcinogenicity. U.S. Department of Health, Education and Welfare, Public Health Service,

National Institutes of Health, National Cancer Institute, DHEW Publication No. (NIH) 78-827, 1978.

30. Truhaut, R., Lich, N.P., Dutertre-Catella, H. T. Molas, G., Huyen, V.N.: Toxicological Study of 1,1,1,2-tetrachloroethane. Archives des Maladies Professionnelles, de Medecine du Travail et de Securite 35(6): 593608, 1974.

31. Brem, H., et al. 1974. The Mutagenicity and NDA-Modifying Effect of Haloalkanes. Cancer Res. 34:2576.

32. National Institute for Occupational Safety and Health. Criteria for a Recommended Standard...Occupational Exposure to 1,1,2,2-Tetrachloroethane. U.S. Department of Public Health Service, Center for Disease Control, National Institute for Occupational Safety and Health, DHEW (NIOSH) Publication No. 77-121, December, 1976.

33. U.S. EPA, 1979. Chlorinated Ethanes: Ambient Water Quality Criteria (Draft).

34. National Cancer Institute. Bioasay of 1,2-Dichloroethane for Possible Carcinogenicity. U.S. Department of Health, Education and Welfare, Public Health Service, National Institutes of Health, National Cancer Institute, Carcinogenesis Testing Program, DHEW Publication No. (NIH) 78-1305, January 10, 1978.

35a. McCann, J., E. Choi, E. Yamasaki, and B. Ames. Detection of Carcinogens as Mutagenic in the Salmonella/Microsome Test: Assay of 300 Chemicals. Proc. Nat. Acad. Sci. USA 72(2): 5135-5139, 1975a.

35b. McCann, J., V. Simmon, D. Streitwieser, And B. Ames. Mutagenicity of chloroacetaldehyde, a possible metabolic product of 1,2-dichloroethane (ethylene dichloride), chloroethanol (ethylene chlorohydrin), vinyl chloride, and cyclophosphamide. Proc. Nat. Acad. Sci. 72(8): 3190-3193, 1975.

36. Vozovaya, M. Changes in the Esterous Cycle of White Rats Chronically Exposed to the Combined Action of Gasoline and Dichloroethane Vapors. Akush. Genekol. (Kiev) 47(12): 65-66, 1971.

37. Vozovaya, M. Development of Offspring of Two Generations Obtained from Females Subjected to the Action of Dichloroethane. Gig. Sanit. 7: 25-28, 1974.

38. Vozovaya, M. The Effect of Low Concentrations of Gasoline, Dichloroethane and Their Combination on the Generative Function of Animals and on the Development of Progeny. Gig. Tr. Prof. Zabol. 7: 20-23, 1975.

39. Vozovaya, M. The Effect of Low Concentrations of Gasoline, Dichloroethane and Their Combination on the Reproductive Function of Animals. Gig. Sanit. 6: 100-102, 1976.

40. Vozovaya, M. A. The Effect of Dichloroethane on the Sexual Cycle and Embryogenesis of Experimental Animals. Akusk. Ginekol. (Moscow) 2: 57-59, 1977.

41. Urosova, T. P. (About a possibility of dichloroethane absorption into milk of nursing women when contacted under industrial conditions.) Gig. Sanit. 18(3): 36-37, 1953 (Rus).

42. Parker, J.C., et al. 1979. Chloroethanes: A Review of Toxicity. Amer. Ind. Hyg. Assoc. J., 40: A46-60, March, 1979.

43. U.S. EPA 1979. Chlorinated Ethanes: Ambient Water Quality Criteria (Draft).

Pesticides

LISTING BACKGROUND DOCUMENT:

MSMA AND CACODYLIC ACID PRODUCTION

By-product Salts Generated in the Production of MSMA and Cacodylic Acid. (T)

I. Summary of Basis for Listing

The hazardous waste generated in the production of MSMA (monosodium methanearsonate) and cacodylic acid is an arsenic-contaminated salt byproduct The Administrator has determined that the solid waste from MSMA and cacodylic acid production may pose a substantial present or potential hazard to human health or the environment when improperly transported, treated, stored, disposed of or otherwise managed, and therefore should be subject to appropriate management requirements under Subtitle C of RCRA. This conclusion is based on the following considerations:

1. These wastes contain very substantial concentrations of arsenic, which is an extremely toxic heavy metal. Arsenic has also been shown to be carcinogenic, mutagenic, and teratogenic. The waste generated at one plant was contaminated with arsenic at a concentration of 6300 mg/l.

2. Large quantities of arsenic-contaminated wastes are generated annually in the production of MSMA and cacodylic acid. Furthermore, large quantities are often disposed of at individual sites. Approximately 190,000,000 lbs of arsenic-contaminated salt have been stored in an open, uncovered pile in Wisconsin.

3. In mildly reducing environments, prevailing in most shallow groundwaters, arsenic is most likely to be present as the very toxic arsenite, to be relatively mobile, and to persist virtually indefinitely.

4. Several incidents of environmental contamination have occurred due to the leaching of MSMA/cacodylic acid wastes disposed of in landfills, resulting in adverse human health effects.

II. Sources of the Waste

A. Profile of the Industry - MSMA is used primarily as a herbicide, and is also an intermediate in the production of cacodylic acid. MSMA is produced in the U.S. by Diamond Shamrock (Green Bayou, Texas); Crystal Chemical (Houston, Texas); and Vineland Chemical (Vineland, New Jersey). Estimated production of MSMA in 1974 was 35 million pounds.(1) Both Crystal Chemical and Vineland Chemical also manufacture cacodylic acid which results in a similar arsenic-contaminated salt by-product. Combination of the salt by-products from both the manufacture of MSMA and cacodylic acid probably occurs at most manufacturing sites, a supposition could not be confirmed for all sites.*

B. Manufacturing Process and Waste Composition - The manufacture of MSMA involves the reaction of arsenic trioxide and liquid caustic soda to form sodium arsenite. This solution of arsenite is then reacted with methyl chloride to form a disodium methylarsenate (DSMA) slurry. This slurry is concentrated, cooled and centrifuged with the DSMA cake going to acidifying tanks and the liquid going to storage for reuse. The DSMA cake is then acidified to form monosodium methylarsenate (MSMA). This slurry is concentrated, cooled and centrifuged, with the monosodium methylarsenate in the liquid phase being transferred to a formulating tank, and the resulting salt cake being collected for disposal. The final MSMA product is formulated to various strengths and is shipped in either bulk form or containers. Arsenic is persent in the salt byproduct

*Crystal Chemical evidently combines its two waste streams, since its state disposal permit provides for disposal of the combined waste streams.

in substantial concentrations, since it is a prevalent feedstock constituent. The production scheme for MSMA is depicted in Figure 1.

The manufacture of cacodylic acid involves the reduction of MSMA using sulfur dioxide. This reduced MSMA is neutralized with caustic soda and then reacted with methyl chloride to form cacodylic acid. The cacodylic acid is concentrated, cooled and centrifuged. The cacodylic acid in the liquid phase goes to a formulating tank and the salt cake is collected for disposal. Again, it is reasonable to expect that arsenic is heavily concentrated in the waste because it is a dominant feedstock constituent.

The presence of arsenic in the waste in high concentrations is confirmed by an analysis of MSMA salt cake waste generated by Crystal Chemical and provided to the Texas Department of Water Resources. This analysis indicates that the waste contains arsenic concentrations of 6,300 mg/l (6). The National Interim Primary Drinking Water Standard for arsenic, a standard regulatory benchmark for measuring arsenic contamination in drinking water, is .05 mg/l, demonstrating the significant concentration level or arsenic in the waste stream.*

The Agency does not presently possess waste concentration data for cacodylic acid waste, but arsenic concentrations are similarly believed to be high, in light of arsenic presence as an essential feedstock material. Further, it is believed that the MSMA and cacodylic acid wastes are often combined for disposal (see page 2), again suggesting that the waste streams will contain substantial concentrations of arsenic.

*With regard to the comparison of waste concentrations and the Drinking Water Standards, which assume environmental release, although not all the arsenic contained in the waste is likely to be released from the waste into the environment, arsenic in these wastes may well be released in concentrations well above .05 mg/l. (see p. 2 following).

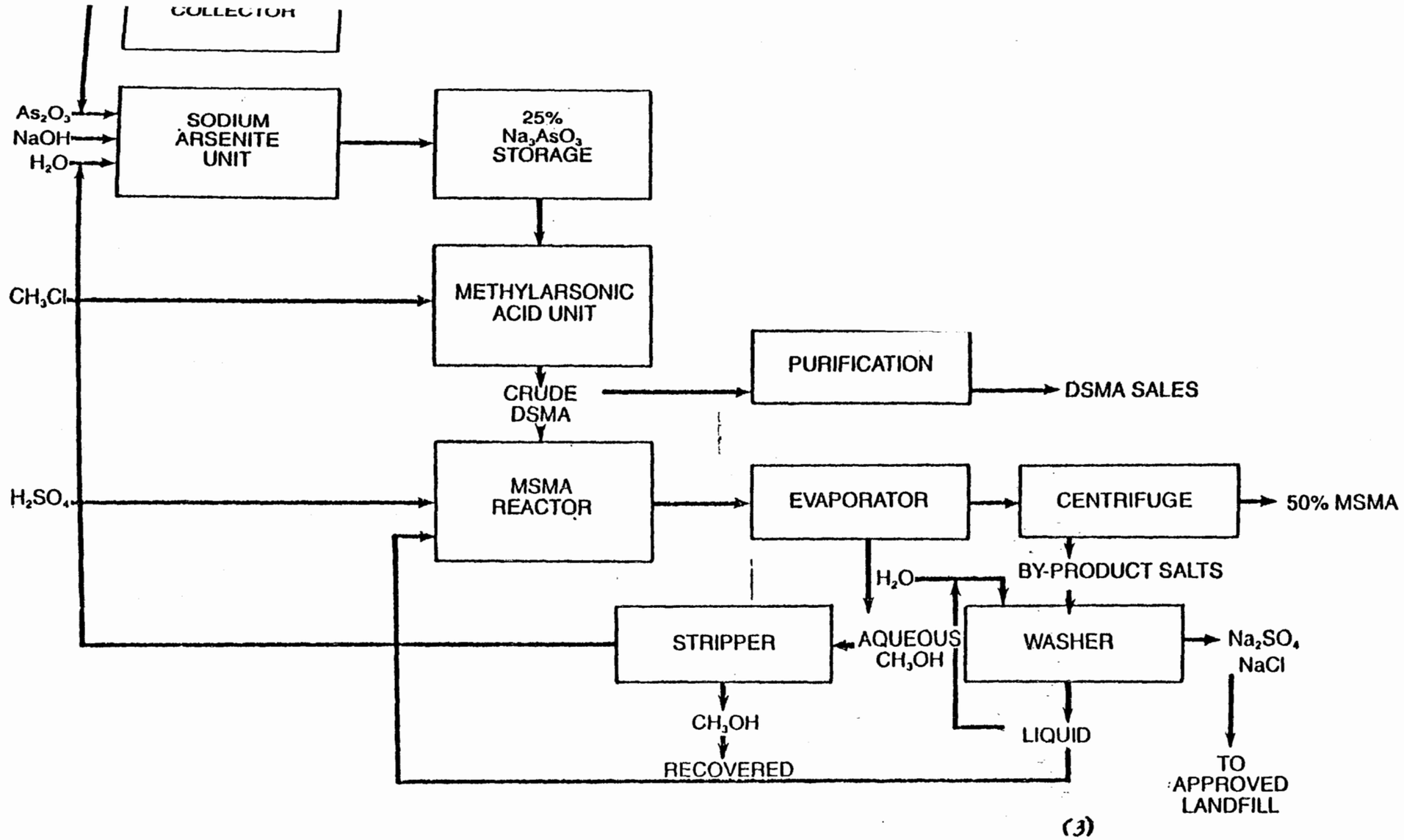

(3)

Figure 1. PRODUCTION AND WASTE SCHEMATIC FOR MSMA.

C. Waste Generation and Management Practices and Quantites of Wastes Managed

There are a number of waste management practices in current industry use, which are discussed below. In addition to these described practices, however, there is a history of waste mismanagement resulting in environmental harm. Descriptions of damage incidents resulting from mismanagement of these wastes are set forth at p. 6-7 following.

Vineland Chemical has disposed of its solid waste in several landfills in Pennsylvania. In May, 1979, Vineland received a permit from the State of Pennsylvania to dispose of 3,000 tons of arsenic contaminated waste.(4)

Diamond Shamrock has a permit from the Texas Department of Water Resources to dispose a monthly average of 481 tons of solid waste from the production of various compounds.(5) _____

_____

_____

_____ * (2)

Crystal Chemical has a state permit for deepwell injection of MSMA-cacodylic acid solid wastes which are slurried with liquid wastes and rainwater and are injected 3500 to 4500 feet below the surface in the Frio Formation (Attachment I). Prior to obtaining this permit, the company utilized unlined earthen holding ponds for waste management in combination with an off-site disposal program in commercial facilities.

III. Discussion of Basis for Listing

A. Hazards Posed by the Waste

The Agency has a number of reasons for listing these wastes

*The underlined daa are those obtained from proprietary reports and data files

as hazardous. First, these waste streams have been implicated in a number of actual damage incidents, demonstrating the potential for substantial hazard if these wastes are improperly managed.

Second, the concentrations of arsenic contained in these wastes are very significant, so that if even a small percentage of the arsenic escapes from the waste, it will enter the environment in high enough concentrations to cause substantial harm. Further, arsenic is likely to be mobile, and will be highly persistent upon escaping from the waste, thus increasing the likelihood of it reaching receptors in concentrations sufficient to cause a substantial hazard. Certainly, there is insufficient evidence to indicate that arsenic will not migrate from the waste, and in light of the known dangers of this contaminant and its high concentrations in the waste, such assurance is necessary to justify not listing these wastes.

Finally, these wastes contain large quantities of arsenic (as well as high concentrations), and wastes containing large quantities of arsenic are often disposed of at individual sites, thus increasing the likelihood of a major damage incident.

1. Incidents Involving Mismanagement of These Wastes.

A history of mismanagement of solid waste from the manufacture of MSMA and cacodylic acid has been documented. It has been reported that Ansul Company, a former manufacturer of MSMA and other arsenical compounds, has stored 95,000 tons of arsenic-contaminated salt on company property in Marinette, Wisconsin. Until recently, this stockpile

was left open to the weather with no containment of runoff. The State of Wisconsin Department of Natural Resources has ordered Ansul to cover the pile as an interim measure and to truck the waste to a landfill in Illinois.(28)

A report from the files of the Texas Department of Water Resources (Attachment I) indicates that a landfill containing these waste streams was subject to overflow conditions during high rainfall periods, causing waste washout, soil contamination, and potential leaching hazard. The report indicates that elevated levels of arsenic were detected to "depths of several feet" in soil surrounding the landfill. This could result in the leaching of arsenic into ground water and potable water supplies.

2. Hazards Based on Arsenic Concentrations in These Wastes and Likely Environmental Fate of Released Wastes

As noted above, arsenic is present in these waste streams in very high concentrations. Thus, improper management of these wastes, for example in unlined landfills, could easily result in a substantial hazard to human health and the environment, in light of the health hazards posed by arsenic (see pp. 8-10 following).

Two likely exposure pathways for the leaching of arsenic are into groundwater and surface water. The potential for this to occur from a waste/soil matrix depends on the concentration of arsenic in the soil, soil type (clay, sand, loam, etc.), the soil pH, as well as the concentrations of cadmium, magnesium, iron, and aluminum in the soil. Arsenic is not easily leached in fine-textured soils (clay materials) but may be leached downward in sandy or loam soils.(30)

Once arsenic escapes from these wastes and migrates to groundwater, it can be expected to be both mobile and persistent. Thus, in mildly reducing environments present in most shallow groundwaters, arsenic is most likely to be present in the form of arsenite, a mobile and highly toxic compound.(7) As an elemental heavy metal, arsenic will persist in some form virtually indefinitely.

The propensity for Arsenic to migrate through soil and groundwater and to persist is illustrated by an arsenic poisoning incident occurring in Minnesota in 1972.(8) In this case, eleven persons became seriously ill by drinking water from a well 31 feet deep. Water from this well was found to contain up to 21,000 mg/l of arsenic. The source of the arsenic was established to be some 50 pounds of arsenic-containing grasshopper bait buried in a seven foot trench near the well about 40 years previously.

Significant pollution of groundwater by arsenic moving from the La Bounty landfill in Iowa has also been noted recently(9), and the potential for movement of this element through the soil profile has been illustrated by its appearance in increased concentration in ground water at a land treatment site for municipal wastewater.(10)

A second exposure pathway of concern is surface water. These wastes, unless properly managed to prevent washout or runoff, could easily contaminate surface waters. Indeed, two of the incidents described above illustrate potential surface water contamination as a result of improper management of these wastes (Attachments I and II).

3. Quantities of the Waste Generated

MSMA and cacodylic acid by-product salts are generated in large

concentrations, and also are disposed of in large quantites at individual sites. The above described damage incident from Marinette, Wisc., indicates that 95,000 tons of these wastes were stored (improperly) at a single site. Similarly, Vineyard disposes of 3,000 tons of these wastes each year.[4] Obviously, such large quantities of this hazardous constituent has the propensity for large-scale environmental harm--for instance, there is a greater chance of exposure, and environmental leaching will continue for longer periods The large quantities of waste generated is thus a further reason for listing these wastes.

B. Health and Ecological Effects

1. Arsenic

Health Effects - Arsenic is extremely toxic in animals and humans[11]. Death in humans has occurred following ingestion of very small amounts (5mg/Kg) of this chemical[12]. Several epidemiological studies have associated cancers with occupational exposure to arsenic[13-15], including those of the lung, lymphatics and blood[16,17]. Certain cases involving a high prevalence of skin cancer have been associated with arsenic in drinking water[18], while liver cancer has developed in several cases following ingestion of arsenic[19]. Results from the administration of arsenic to animals in drinking water or by injection supports the carcinogenic potential of arsenic.

Occupational exposure to arsenic has resulted in chromosomal damage[20], while several different arsenic compounds have demonstrated positive mutagenic effects in laboratory studies[21-23].

The teratogenicity of arsenic and arsenic compounds is well established [24-26] and includes defects of the skull, brain, kidneys,

gonads, eyes, ribs and genito-urinary system.

The effects of chronic arsenic exposure include skin diseases progressing to gangrene, liver damage, neurological disturbances[27] and cardiovascular disease[13].

Arsenic is designated as a priority pollutant under Section 307(a) of the CWA. Additional information and specific references on adverse effects of arsenic can be found in Appendix A.

Ecological Effects - The data base for the toxicity of arsenic to aquatic organisms is more complete for freshwater organisms, where concentrations as low as 128 ng/l have been acutely toxic to freshwater fish. A single marine species produced an acute value in excess of 8,000 ng/l. Based on one chronic life cycle test using *Daphnia magna*, a chronic value for arsenic was estimated at 853 ng/l.[28]

Bioaccumulation factors can reach 13,000 in oysters, 8,600 in lobsters, and 23,000 in mussels.[28]

Regulations - OSHA has set a standard air TWA of 500 mg/M^3 for arsenic. DOT requires a "poison" warning label.

The Office of Toxic Substances under FIFRA has issued a pre-RPAR. The Carcinogen Assessment Group has identified arsenic as a compound which exhibits substantial evidence of carcinogenicity. The Office of Drinking Water has regulated arsenic under the Safe Drinking Water Act due to its toxicity and the Office of Air Quality Planning and Standards has begun a preregulatory assessment of arsenic based on its suspected carcinogenic effects. The Office of Water Planning and Standards under Section 304(a) of the Clean Water Act has begun development of a regulation based on

health effects other than on carcinogenicity and environmental effects. Finally, the Office of Toxic Substances has completed Phase 1 assessment of arsenic under TSCA.

In addition, the states of Pennsylvania, Texas, and Wisconsin obviously deem this waste to require careful management to prevent substantial environmental harm (see attachment I and II).

Industrial Recognition of Hazard - Arsenic is rated as highly toxic through intra-muscular and subcutaneous routes in Sax, Dangerous Properties of Industrial Materials.[29] Arsenic is also rated as highly toxic through ingestion, inhalation, and percutaneous routes in Patty, Industrial Hygiene and Toxicology.

V. References

1. Kelso, G., R. Wilkinson, J. Malon, Jr., and T. Ferguson. Development of Information on Pesticides Manufacturing for Source Assessment. EPA-600/2-78-100. Environmental Protection Agency, Research Triangle Park, NC, 1978.

2. Proprietary information submitted to EPA by Diamond Shamrock in response to a "308" letter.

3. Sittig, M., Pesticides Process Encyclopedia Noyes Data Corporation, Park Ridge, New Jersey, 1977.

4. Personal Communication, Kirti Shah, Pennsylvania Department of Environmental Resources (717-787-7381), 1/31/80. See Appendix D.

5. Personal Communication, David Barker, Texas Department of Water Resources. (512-475-5633), 12/18/79. See Appendix D.

6. Personal communication, David Jeffrey, Texas Department of Water Resources (512-475-7097), 12/31/79. See Appendix D.

7. NIOSH, 1978. Registry of Toxic Effects of Chemical Substances.

8. Thornhill, J., 1980. USEPA-ORD, Ground Water Research Branch, Ada, OK Personal Communication.

9. Koerner, E. L. and D. A. Haus, 1979. Long-Term Effects of Land Application of Domestic Wastewater. EPA-600/2-79-072. USEPA, Washington, D.C.

10. Hounslow, A. W. 1980 Ground Water Geochemistry: Arsenic in Landfills. Ground Water Journal (in press).

11. Gleason, M. N., et al. Clinical Toxicology of Commercial Products. Acute Poisoning. (1969) 3rd ed., p. 76.

12. Lee, A. M. and Fraumeni, J. F., Jr. Arsenic and respiratory cancer in man: An occupational study. Jour. Natl. Cancer Inst. 42:1045 (1969)

13. Pinto, S. S. and Bennett, B. M. Effect of arsenic trioxide exposure on mortality. Arch. Environmen. Health 7:5883 (1963).

14. Kwratune, M., et al. Occupational lung cancer among copper swelters. Int. Jor. Cancer 13:552 (1974).

15. OH, M. G., et al. Respiratory cancer and occupational exposure to arsenicals. Arch. Environ. Health 29:250 (1974).

16. Baetjer, A. M., et al. Cancer and occupational exposure to inorganic arsenic. 18th Int. Cong. Occup. Health. Brighton, England. p. 393 in Abstracts, September 14-19 (1975)

17. Tseng, W. P., et al. Prevalence of skin cancer in an endmeic area of chronic arsenicism in Taiwan. Jour. Natl. Cancer Inst. 40:453 (1968).

18. ECAO Hazard Profile: Arsenic. (1980) SRC, Syracuse, NY

19. Nordenson, I., et al. Occupational and environmental risks in and around a swelter in northern Sweden. II. Chromosomal aberrations in workers exposed to arsenic. Hereditas 88:47 (1978).

20. Petres, J., et al. Zum Einfluss a norgan ischen Arsens auf die DNS-Synthese menschlicher Lymphocyten in vitro. Arch. Derm forsch. 242:343 (1972).

21. Paton, G. R. and Allison, A. C. Chromosome damage in human cell cultures induced by metal salts. Mutat. Res. 16:332 (1972).

22. Moutshcen, J. and Degraeve, N. Influence of thiol-inhibiting substances on the effects of ethyl methyl sulphonate on chromosomes. Experientia 21:200 (1965)

23. Hood, R. D. and Bishop, S. L. Teratogenic effects of sodium arsenate in mice. Arch. Environ. Health 24:62 (1972).

24. Beandoin, A. R. Teratogenicity of sodium arsenate in rats. Teratology 10:153 (1974).

25. Ferm, V. H., et al. The teratogenic profile of sodium arsenate in the golden hamster. Arch. Environ. Health 22:557 (1971).

26. U.S. EPA. 1979. Arsenic: Ambient Water Quality Criteria. Environ. Protection Agency, Washington, D.C.

27. WHO. 1979. Environmental Health Criteria: Arsenic. World Health Organization. Geneva.

28. Sperling, L. Wisconsin's Hazardous Waste Line, Wisconsin Natural Resources. Vol 4 (1): 14-16, 1980.

29. Sax, N. Irving, 1975. Dangerous Properties of Industrial Materials. Fourth Edition, Van Nostrand Reinhold, New York.

30. National Research Council, Arsenic, National Academy of Sciences, Washington, D. C. 1977

ATTACHMENT I

Plant located in West Harris County. Crystal manufactures arsenic-based pesticide chemicals for sale. The proposed well will be used to dispose of water which has been contaminated as a result of these manufacturing processes. To the present time, the Company has utilized only unlined earthen holding ponds for wastewater management, in combination with a program of off-site disposal in commercial waste facilities. Efforts to minimize the volume of contaminated waste water in the Company's ponds by evaporation, are thwarted by the heavy rainfalls which occur in the Houston area. Site inspection after such rainfall typically reveals that water, tinged an orange-brown color, covers much of the site, and in some instances, slowly drains off-site. Analyses of soil samples from the plant indicate elevated levels of arsenic compounds in the soil to depths of several feet. To prevent further soil and water pollution, the Company has undertaken the waste disposal well project as the most environmentally safe method of plant waste disposal. Along with the implementation of the proposed injection operations, it will be necessary to correct the existing pollution by closing the ponds, and diking and paving the plant area. Effective control of rainfall runoff will prevent off-site discharge of arsenic-contaminated waters. Evaluation of the disposal well project plans follow.

CHARACTERISTICS AND COMPOSITION OF THE WASTE WATER

Manufacturing Process - Listed below is a summary of operations at Crystal's Rogerdale Road facility.

MSMA - Arsenic trioxide and liquid caustic soda are reacted to form sodium arsenite. This solution of sodium arsenite is then reacted with methyl chloride to form a DSMA (disodium methylarsenate) slurry. This slurry is concentrated, cooled and centrifuged with the DSMA cake going to acidizing tanks and the liquid going to storage for reuse. The DSMA cake is acidized to form monosodium methylarsenate. This slurry is concentrated, cooled and centrifuged with the monosodium methylarsenate in the liquid phase being transferred to a formulating tank, and the resulting salt cake being collected for disposal. The final MSMA product is formulated to various strengths and is shipped in either bulk form or containers.

Dinitro General - Dinoseb (2-Sec-Butyl-4, 6-Dinitrophenol) is dissolved in a solvent, an emulsifier is added, and the product is shipped in either bulk or containers.

Dinitro 3 - Dinoseb is reacted with triethanolamine to form the triethanolamine salt of Dinoseb. A surfactant is added and the material is shipped in bulk or containers.

Naptalam - Alphanaphthyl amine and phthalic anhydride are reacted in a closed system to form sodium naphthylphthalamate. This material is one of the ingredients of a product produced under the trade name NAPTRO.

Naptro - Naptalam, caustic soda, and Dinoseb are mixed to form NAPTRO. This material is solid in 5 gallon and in 30 gallon containers.

Dimethoate 267 - Technical dimethoate is dissolved in a solvent and emulsifiers are added. The product is then either drummed at the plant or shipped in bulk form to a packager.

Cacodylic Acid - MSMA is reduced using sulfur dioxide. This reduced MSMA is neutralized with caustic soda and then reacted with methyl chloride to form cacodylic acid. The cacodylic acid is concentrated, cooled and centrifuged with the cacodylic acid in the liquid phase going to a formulating tank and the salt cake collected for disposal.

Chemical Analysis - Samples from the Company's existing waste water holding ponds have yielded the following analysis.

	MSMA Salt Cake	Wastewater (Pond)	Wastewater (Sump)
pH	7.9	9.8	9.4
Total Residue (105°C)	30%	7.7%	5,100 mg/l
Alkalinity, as $CaCO_3$			
Hydroxyl	0 mg/l	3,000 mg/l	0 mg/l
Bicarbonate	1,800	0	220
Carbonate	3,920	8,000	1,080
Chloride	78,000	20,800	850
Nitrate N	0.60	0.26	0.16
Sulfate	103,000	11,600	564
Total Organic Carbon	2,400	2,000	180
Metals			
Arsenic	6,300	6,900	1,500
Barium	<0.5	<0.5	<0.5
Boron	<0.02	0.08	0.08
Cadmium	4.6	0.13	<0.01
Calcium	116	85	24
Chromium	26	5	0.6

Treatability Studies - Various alternative methods of disposal and treatment of the waste streams have been investigated. While some of these various methods could be marginally successful in eliminating the waste, each produces contaminated sludge or residue. Therefore, deep well injection is judged to be the most practical and economic solution for disposal of this waste stream.

The following methods were investigated as an alternative to injection:

1. Solar evaporation - The efficiency of solar evaporation is related to temperature, humidity and rainfall rate, among other factors. The annual rainfall rate at the plant site is in excess of 50" per year while the evaporation rate is approximately 43" per year. Evaporation would also produce a concentrated, contaminated precipitate which would pose additional disposal problems.

2. Stream stripping - Little, if any, of the contaminants would be removed and an extremely high level of energy consumption would be required.

3. Spray evaporation - Spray evaporation, while more effective than solar ponds, will also be inefficient because of the humid climatic conditions. Spray evaporation has a potential for air pollution and will produce a contaminated sludge. Large surface areas would be required for this type of system and these areas are not available at the plant site.

4. Biological treatment - The nature of this waste does not enable it to support sustained biological growth. Any sludge produced by this method would be highly contaminated and would pose additional disposal problems.

5. Neutralization - Neutralization is not a viable method of disposal in this instance because highly toxic precipitates would be produced.

6. Incineration - Since the principal contaminant in this waste stream is arsenic, incineration is not an acceptable method of disposal. Arsenic trioxide sublimes at a temperature of 192 degrees C. and results in highly toxic conditions with the potential for serious air pollution.

Compatibility - Compatibility studies will be conducted after cores are taken from the injection interval and a sample of formation water is obtained.

Pretreatment Facilities - Existing settling ponds will be closed at the company's plant site. Crystal proposes to transfer waste from the process area to two welded steel storage/settling tanks comprising a total capacity of 420,000 gallons. A portion of the waste stream will be diverted to slurry the salt cake by-product of the MSMA process. This slurry will then be transferred to the settling tanks. From the settling tanks, filtration will be accomplished by two 60 GPM units installed in parallel. From these filters, the waste stream will enter a 2,000 gallon surge tank, and pass through a cartridge-type guard filter on the way to the injection pumps and the wellhead.

Solids accumulating in the settling tanks will be removed periodically and transported to an approved off-site disposal facility. Crystal currently

operates under Registration No. 30781, Class I, and No. 30722, Class I and Class II covering off-site disposal of solid waste.

Emergency Storage - In the event of an extended well shut down, normal waste output plus any contaminated runoff will be stored in steel tanks and will be transported off-site to a commercial deep well facility.

DRILLING AND COMPLETION OF THE DISPOSAL WELLS

A 14-3/4" hole will be drilled to 2,200 feet. Surface casing (10-3/4") will be set to this depth and cemented in place. From 2,200 feet, a 9-7/8" hold will be advanced to the total depth of 4,500 feet, whereupon longstring casing (7") will be set to TD and cemented in place. Only the primary injection zone from a subsurface interval of 4,350 ± to 4,500 ± will be initially completed. Injection into this zone will be accomplished through 3-1/2" steel tubing. A 4" wire-wrapped stainless steel screen will be utilized throughout the injection zone. Isolation of the injection zone from the tubing longstring casing annulus will be maintained by a packer. Gravel packing will be employed to control sand influx to the wellbore in the injection zone.

ATTACHMENT II

PHONE LOG

MEMORANDUM OF ORAL ADVICE

Bureau of Solid Waste Management
Division of Hazardous Waste Management
State of Pennsylvania
Department of Environmental Resources

Date: January 31, 1980

Name: Kurti Shah, 717-787-7381

Re: Vineland Chemical Solid Waste (MSMA & Cacodylic Acid)

Telephone [XX] Conference [ ]

Facts and Query:

Quantity, Composition and Present and Past Disposal Practices for Disposal of MSMA and Cacodylic Acid Waste in Pennsylvania.

Is this information Public Record? Yes.

Answer: Disposed of in past at Grove Sanitary Landfill (used a process developed by Stobatrol Corporation to encapsulate waste. Monitoring wells in area show high sulfates and chlorides. No arsenic yet. State may order recovery of waste) and at Lyncott Landfill (uses terra-tite system).

By: E.C. Monnig

Comments: Waste is said to be 60% NaCl, 40% Na_2SO_4 and less than 1% arsenic (according to Vineland). Vineland permitted to dispose of 1,000 tons (850 yd^3) in August, 1977. May 1979 - permit to dump 2,000-3,000 pounds of solid waste from MSMA and Cacodylic Acid production.

MEMORANDUM OF ORAL ADVICE

Date: December 18, 1979

Name: David Barker, TDWR 512-475-5633

Re: MSMA Waste - Diamond Shamrock Telephone |XX| Conference |__|

Facts and Query: Quantity, Composition and Disposal practices of MSMA solid waste -- Diamond Shamrock.

Answer: Waste contains $NaCl$-Na_2SO_4 and arsenic. Relative concentration unknown. Diamond Shamrock permitted to dispose on-site and off-site. Off-site permit allows 481 tons on a monthly average.

By: E.C. Monnig

Comments:

MEMORANDUM OF ORAL ADVICE

Date: December 31, 1979

Name: David Jeffrey TDWQ

Re: Cacodylic Acid and MSMA Waste Telephone |XX| Conference |__|

Facts and Query: 1) Is the Crystal Chemical Solid waste report a matter of public record? Yes.

2) Does MSMA salt also contain Cacodylic Acid by-products? Probably.

Answer:

By: E.C. Monnig

Comments:

LISTING BACKGROUND DOCUMENT

CHLORDANE PRODUCTION

Wastewater and Scrub Water from the Chlorination of Cyclopentadiene in the Production of Chlordane (T)

Wastewater Treatment Sludges from the Production of Chlordane (T)

Filter Solids from the Filtration of Hexachlorocyclopentadiene in the Production of Chlordane (T)

Vacuum stripper discharges from chlordene chlorinator in the production of chlordane (T)

I. SUMMARY OF BASIS FOR LISTING

The hazardous waste streams generated from chlordane production include process wastewater and scrubwater, wastewater treatment sludge, filter solids, and vacuum stripper discharges. These waste streams contain hexachlorocyclopentadiene, chlordane, heptachlor, and other chlorinated organics.

The Administrator has determined that the solid waste from chlordane production may pose a substantial present or potential hazard to human health or the environment when improperly transported, treated, stored, disposed of or otherwise managed, and therefore should be subject to appropriate management requirements under Subtitle C of RCRA. This conclusion is based on the following considerations:

1. Wastewater and scrubwater from the chlorination of cyclopentadiene, wastewater treatment sludge and filter solids from hexachlorocyclopentadiene filtration contain hexachlorocyclopentadiene. Hexachlorocyclopentadiene is very toxic.

2. The vacuum stripper discharges from chlordene chlorinator waste is expected to contain chlordane, heptachlor, and other chlorinated organics. Chlordane and heptachlor have been reported to be carcinogenic and/or mutagenic.

3. _____*

4. If the wastes are mismanaged, the toxic constituents in the waste could migrate from the waste and contaminate groundwater. Certain constituents of the waste (e.g., chlordane and heptachlor) are projected to be persistant in groundwater.

II. SOURCES OF THE WASTE AND TYPICAL DISPOSAL PRACTICES

A. Profile of the Industry

According to SRI Directory of Chemical Producers[1] and two other sources[2,3], chlordane is produced by only one company, Velsicol Chemical Company (a subsidiary of Northwest Industries) at a plant in Marshall, Illinois. The chlordane industry production capacity is estimated at 13,600 metric tons/yr (15,000 tons/yr).[3] _____

_____[4]

Chlordane is a versatile, broad-spectrum insecticide which has been in commercial use for more than 20 years.[3] It is used to protect a large variety of food crops, lawns, turf, ornamental and shade trees, and the like from parasitic insect life. In 1972, nonagricultural uses of chlordane accounted for an estimated 80 percent of total U.S. consumption of chlordane in that year.[3]

B. Manufacturing Process

Figure 1 presents a generalized production and waste schematic for chlordane. As shown in Figure 1, the first production step involves chlorination of cyclopentadiene to

* All underlined information is from properietary reports and data files.

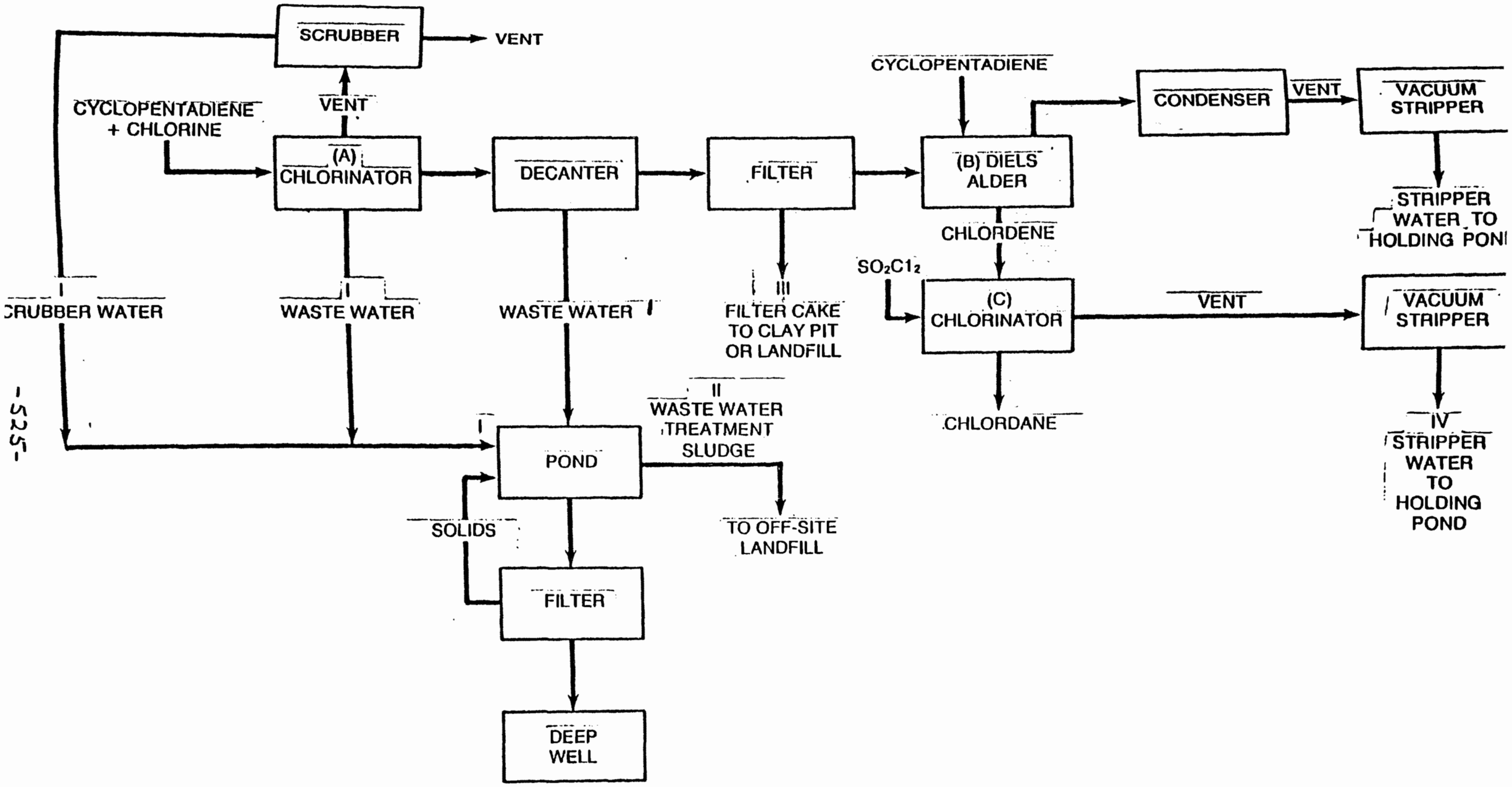

Figure 1. CHLORDANE MANUFACTURING PROCESS AND WASTE SCHEMATIC (MODIFIED FROM REFERENCE 3)

to obtain hexachlorocyclopentadiene. The hexachlorocyclopentadiene is then condensed with cyclopentadiene to form chlordene via the Diels Alder reaction. The chlordene is chlorinated to form chlordane. The main process reactions are as follows:(3)

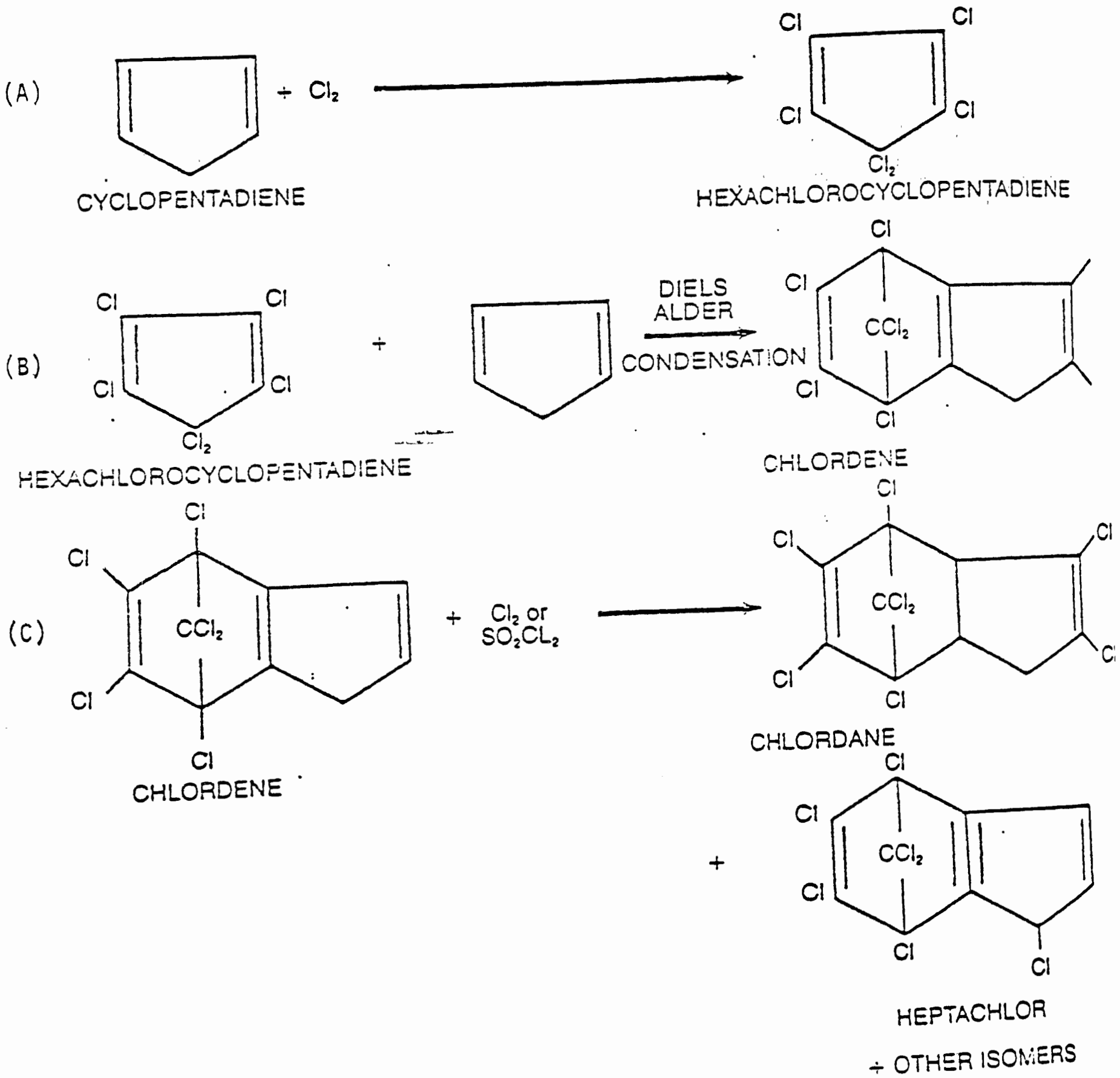

These process reactions indicate the sources of the hazardous constituents in the wastes. They are marked A, B and C in Figure 1 to illustrate precisely where the reactions take place in the process.

C. Waste Generation and Management

1. Waste Streams

The four waste streams from the production of chlordane which are listed as hazardous are:

- Wastewater and scrub water from the chlorination of cyclopentadiene
- Wastewater treatment sludges
- Filter solids from the filtration of hexachlorocyclopentadiene
- Vacuum stripper discharges from chlordene chlorinator in the production of chlordane

Hexachlorocyclopentadiene is the constituent of concern in the first three listed wastes; chlordane, heptachlor, and other chlorinated organics are the constituents in the last listed waste.

Each of the wastes--wastewater and scrubwater, wastewater sludges, filter solids and vacuum stripper discharges--are marked I, II, III and IV respectively, in Figure 1.

Wastewater and scrubwater (I) are generated during the chlorination of cyclopentadiene and subsequent separation steps.

(4). The cyclopentadiene contains numerous cyclic compounds, which when chlorinated result in a multiplicity of toxic chlorinated cyclic compounds, among which hexachlorocyclopentadiene predominates, since it is the principal reaction product. Wastewater from reactor cleanup, decanting and vent scrubbing thus contain significant amounts of these components. As shown in Figure 1, this waste is sent to a settling pond.

The second listed waste (II) is a result of the treatment of the wastewater which contains hexachlorocyclopentadiene and other toxic chlorinated organics. Since, hexachlorocyclopentadiene is relatively insoluable (25mg/l) (29) and is amenable to biodegradation due to its physical chemical form, the Agency expects this toxic organic to be present in the sludge. Furthermore, concentrations of hexachlorocyclopentadiene in the sludge would be expected to be significantly higher than in wastewaters due to the undiluted composition of this waste.

---

(4) Wastewater treatment sludge is sent to an off-site landfill for disposal.(3)

The third waste, namely filter solids from the filtration of hexachlorocyclopentadiene (III) results when the crude hexachlorocyclopentadiene is filtered before it is reacted to form chlordene (before reaction B). The filtration process is intended to remove organic impurities, including hexachlorocyclopentadiene. It is thus expected that this constituent

will be present in this waste, probably in significant concentrations. This solid waste is sent to a commercial landfill for disposal. (3)

Vacuum stripper wastewater (IV) from the chlordene chlorinator vent vacuum scrubber contains chlordane (which would not be completely stripped) and heptachlor (the principal reaction product) in dissolved or suspended states. This waste goes to a holding pond prior to treatment.(3)

While the precise concentration of waste constituents in these waste streams are not presently available, even very small concentrations are of concern due to these compounds' extreme toxicity and capacity for genetic harm, as well as the history of waste mismanagement associated with the sole producer of chlorodane (see pp. 12-13 below). In any case, concentrations of these waste constituents are probably quite substantial, since the identified waste constituents are either principal reaction by products (hexachlorocyclopentadiene, heptachlor), or the end product (chlordane).

III. DISCUSSION OF BASIS FOR LISTING

A. Hazards Posed by the Wastes

As previously mentioned, the listed wastes contain one or more of the hazardous constituents hexachlorocyclopentadiene, chlordane and heptachlor.

Chlordane and heptachlor have been well documented as having lethal effects in humans when ingested in small amounts, and hexachloropentadiene has been documented to alter kidney

functions, and cause eye and throat irritation and headache in humans. (For further information, see Health and Ecological Effect of Constituents pp. 14-17.)

1. Risks in Waste Management

As previously indicated, (Figure 1), the wastewaters from chlordane manufacture are discharged to a holding pond and filtered prior to disposal.[3] Sludges from this holding pond and filter solids from hexachlorocyclopentadiene filtration are taken off-site for disposal.[3] Disposal of the latter in landfills, even if plastic-lined drums are used, represents a potential hazard if the landfill is improperly designed or operated (i.e., drums corrode in the presence of even small amounts of water). This can result in the leaching of hazardous compounds and the subsequent contamination of groundwater. The holding pond presents a comparable risk if not properly managed.

Further, damage incidents indicate (see Damage Incidents, pp. 10-14) that hexachlorocyclopentadiene and heptachlor contaminated wastes have been disposed of in improperly designed and managed disposal facilities, which resulted in the contamination of the air and drinking water in the area. The possibility of improper management of these wastes and the resulting associated hazard, is thus highly realistic.

A further consideration is the actual transportation of these wastes to off-site disposal facilities. This increases the likelihood of their being mismanaged, and may result

either in their not being properly handled during transport or in their not reaching their destination at all (thus making them available for harm elsewhere). A transport manifest system combined with designated standards for the management of these wastes will greatly reduce their availability to do harm to human beings and the environment. In reference to this particular consideration, there was a damage incident in Memphis, Tennessee (discussed in detail on p. 12), due to similar, unmanifested waste being illegally transported and disposed.

2. Fate of Constituents in Waste Stream

The waste constituents appear to be fully able to migrate, pass through soils, and persist in the environment to an extent which could cause substantial harm to human health and the environment. Although heptachlor and chlordane are relatively insoluble, their ability to migrate has been demonstrated by documented damage incidents (see pp. 10-14). Based upon estimates by EPA,[6] the constituents chlordane and heptachlor in these waste streams are projected to be persistent in ground water, and exposure to humans using drinking water drawn from ground water in areas adjacent to disposal sites is likely. Movement of all the constituents identified in the waste stream is projected to be widespread within surface water systems, resulting in likely exposure to aquatic life forms in rivers, ponds, and reservoirs. Concentrations up to 0.8 mg/l and 0.04 mg/l of chlordane and

heptachlor respectively, have been observed in surface waters, confirming these compounds' mobility and persistence.[7,8]

Chlordane is a persistent chlorinated hydrocarbon insecticide. It persists in the soil for more than one year, sometimes for many years. Its overall rate of degradation is low.[29]

Further damage incidents (see Damage Incidents, below) illustrate that hexachlorocyclopentadiene and heptachlor have posed a hazard via air exposure to workers in contaminated areas; they have also migrated from disposal sites to surface and ground waters resulting in the contamination of drinking water sources in the vicinity.

3. Damage Incidents

The most serious wastewater and solid waste disposal problems from the manufacture of chlordane result from the synthesis of the hexachlorocyclopentadiene intermediate. The wastes from this process step contain highly toxic hexachlorocyclopentadiene reaction product. The link between disposal and management of heptachlorocyclopentadiene contaminated wastes and the hazardous implications of the leaching of the toxic organic into drinking water and/or air is well documented by the damage incident described below. Further, the vacuum stripper discharges from the chlordene chlorinator are of particular concern to the Agency because there also have been documented damage incidents which show the mis-

management, mobility and persistence of heptachlor contaminated waste streams (also described below).

Sometime during March, 1977, an unknown toxic substance began entering the Morris Forman waste treatment plant in Louisville Kentucky. As a result, employees on sight suffered from eye, nose, throat, lung, and skin irritation. It was found that many wastewaters from this plant contained constituents that are toxic. One of the predominant contaminants identified was hexachlorocyclopentadiene. Upon an investigation to determine the point of entry of these contaminants into the sewer system, it was found that a local waste handler had storage facilities for industrial wastes in the Louisville area. An investigation of five sights suspected to be used by the local disposal company confirmed the existence of hexachlorocyclopentadiene at one or more of the locations. Drums out in the open, buried drums and barrel storage were some of the implemented storage facilities and thus the points of release of these contaminants. As a result, towns whose water comes directly from the Ohio River had been alerted to the flow or raw sewage containing the contaminant hexachlorocyclopentadiene into the river at Louisville. Many of these toxic constituents were thus available for release due to improper management and disposal practices and even in minimal concentrations, many cause a potential health or environmental hazard via air exposure or contamination of drinking water sources.(28)

Further, the same type of waste as the toxic heptachlor reaction by-products from chlordane production was generated by Velsicol in Memphis, Tennessee in the production of heptachlor. This waste material from the Memphis plant was one of the industrial wastes which was illegally dumped into the Louisville, Kentucky sewer by a contract waste disposal company. Again, the specific results were the killing of all sewage treatment plant biota and a resulting water contamination problem. The cost of decontamination was in excess of one million dollars and many workers were exposed to this toxic material.*

Velsicol's Memphis plant has also created groundwater contamination problems resulting in several wells becoming contaminated following disposal of highly toxic heptachlor containing waste.* Disposal of this waste in either deep wells or, even in clay-lined pits can, and has, resulted in contamination problems.

In another serious instance of waste mismanagement involving both hexachlorocyclopentadiene containing wastes and Velisicol. Velsicol buried chlorinated pesticide waste containing hexachlorocyclopentadiene in drums at a Hardenman County site beginning in 1964. A U.S.G.S. Study (1966-1967) revealed that the wastes had migrated vertically to a depth of 90 feet and laterally to a distance of 25 feet. Hexachlorocyclopentadiene and other chlorinated hydrocarbons were also

* OSW Hazardous Waste Division, Hazardous Waste Damage Incidents, unpublished, open file 1978.

detected in surface runoff. Samples of adjacent water wells taken in April-May of 1978 showed contamination by the wastes. The contamination was sufficient to advise the well owners not to drink the water. At the time of the report a line was being laid to connect these owners with the Town County Water Supply. The cost of cleaning up the damage was $741,000 plus an outlay of $120,000 to supply water for the residents. (Source: United State Geological Survey (1966-1967); OSW Hazardous Waste Division, Hazardous Waste Incidents, unpublished, open file, 1978). This damage incident again illustrates the hazardousness of the waste, since upon mismanagement, waste constituents (including hexachlorocyclopentadiene) proved capable of migrating, persisting, and causing substantial hazard.

Past waste management practices of waste containing the constituents of concern have presented special problems. (For a more detailed discussion, see the report on Hazardous Waste Disposal, Subcommittee on Oversight and Interstate and Foreign Commerce, 96th Congress 1st sess. 4,10,17). As stated there, 16.5 million gallons of waste contaminated with heptachlor, endrin, benzene, and aldrin was dumped at a Hardenman County dump site. The dump site was ordered closed by the State of Tennessee in 1972, but local drinking is contaminated and unusable. This further indication of waste mismanagement by the sole producer of chlordane production wastes confirms the need for hazardous waste designation of these wastes.

Thus, these damage incidents illustrates the potential

environmental and health hazard resulting from leaching contaminants from these improperly disposed and managed wastes.

B. Health and Ecological Effects of Constituents

1. Chlordane

Health Effects - Chlordane is a very toxic chemical [oral rat LD_{50} = 283 mg/Kg] with lethal effects in humans when ingested in small amounts.(9) Chlordane administered orally in mice is carcinogenic causing liver cancers in both sexes.(10) Chlordane has also been evaluated by CAG as having substantial evidence of carcinogenicity. Chlordane has been mutagenic in certain human cell assays.(11) Repeated doses of chlordane have altered blood protein, blood glucose and certain enzymes in gerbils.(12)

Chlordane is designated as a priority pollutant under Section 307(a) of the CWA. Additional information and specific references on adverse effects of chlordane can be found in Appendix A.

Ecological Effects - Chlordane is acutely toxic to most aquatic animal life. Lethal concentrations to freshwater fish are in the microgram/liter range. Invertebrates appear to be more sensitive to chlordane.(13) Similarly, salt water fish and invertebrates have been shown to be very sensitive to chlordane.(14) Chronic aquatic toxicity of this compound is even more severe across all freshwater and

marine animal life.(14) In particular, fish embroyos appear to suffer devastating damage from as little as a tenth of a microgram of chlordane.(14) The acquatic damage is amplified by the bioaccumulation factor of chlordane, i.e., scuds bioaccumulate chlordane 7,400 fold, freshwater algae bioaccumulate 133,000 fold. Chlordane is slightly toxic to birds, moderately toxic to wild mammals, highly toxic to soil insects, and moderately toxic to some soil bacteria and to earthworms.

Regulations - The OSHA standard for amounts of chlordane in air is a TWA of 600 n/m^3 (skin), based on the "one hit" model of chemical carcinogenesis. The USEPA has estimated levels of chlordane in ambient water which will result in a risk of 10^{-6} cancer incidence of 0.12 nanograms/liter. Presently, a limit of 3 nanograms/liter for chlordane has been suggested under the Interim Primary Drinking Water Standard. The Canadian Drinking Water Standard is also 3 nanograms/liter. To protect freshwater life, the 24-hour average is 0.24 micrograms/liter and may not exceed 0.36 micrograms/liter. For saltwater species, the draft criterion is 0.0091 micrograms/liter for a 24-hour average, not to exceed 0.18 micrograms/liter.(15)*

*The Agency is not using the proposed water quality criteria as a regulatory benchmark, but is referring to them here to illustrate a potential substantial hazard if it migrates from the waste at small concentrations.

Industrial Recognition of Hazard - Sax, Dangerous Properties of Industrial Materials, designates chlordane as highly toxic systematically via oral, skin absorption and inhalation routes of exposure.

2. Heptachlor

Health Effects - Heptachlor is extremely toxic in animals [oral rat LD_{50} = 40 mg/Kg], also causing deaths in humans following ingestion of very small amounts.(16) Heptachlor is carcinogenic, causing liver cancer in mice.(17) Heptachlor has also been evaluated by CAG as having substantial evidence of carcinogenicity.

This chemical is mutagenic and teratogenic in animals, causing resorbtion of fetuses(18), chromosomal abnormalities in bone marrow cells in adults, and cataracts in offspring.(19) Heptachlor has caused a marked decrease in litter size and lifespan in newborn rats.(20) It also causes abnormal DNA synthesis in human cell cultures.(32)

Heptachlor is a convulsant(21) and also interferes with glucose metabolism when administered in chronic studies.(22) Additional information and specific references on adverse effects of heptachlor can be found in Appendix A.

Regulations - The OSHA standard for heptachlor is TWA (air) 500mg/m^3.

Industrial Recognition of Hazard - Sax, Dangerous Properties of Industrial Materials, designates heptachlor as highly toxic via oral and dermal routes.

3. 1,2,3,4,5,5-Hexachloro-1,3-cyclopentadiene (HCCP)

Health Effects - 1,2,3,4,5,5-Hexachloro-1,3-cyclopentadiene (HCCP) is very toxic to animals [oral rat LD50 = 113 mg/kg]. Adverse effects have been reported when plant workers were exposed to this chemical as a volatile component of municipal sewage.(24) These included alterations in kidney functions, elevation of liver enzyme, eye and throat irritation and headache.

While the hexachlorocyclopentadiene is not metabolicly activated to a mutagenic form *in vitro*, it may form a number of halogenated hydrocarbon residues [which have been demonstrated to be mutagenic(35)] when exposed in the ecosystem. Hexachlorocyclopentadiene has been designated as a priority pollutant under Section 307(a) of the CWA. Additional information and specific references on adverse effects of hexachlorocyclopentadiene can be found in Appendix A.

Ecological Effects - HCCP is extremely toxic to minnows with an LC_{50} of 7 micrograms/liter following 96 hours of exposure.(27) Bioaccumulation of HCCP in these fish is evident from the recovery of 89% of this contaminant (on a wet-weight basis) and, moreover, the extremely low chronic lethal concentration of 6.7 micrograms/liter over a 30-day period.

Regulations - Hexachlorocylopentadiene is regulated by the Office of Water and Waste Management of EPA under the Clean Water Act, Section 311. Technical assistance data has been requested to obtain data on environmental effects, high-

volume production and spill reports. Under Judicial Order of December 15, 1978 pursuant to the case of NRDC VS. Costle, preregulatory assessment of suspect carcinogenicity/mutagenicity and establishment of Safe Drinking Water Act and Clean Water Act, Section 304(a), criteria was initiated in February 1979. In addition, in April 1979, under the Clean Air Act, hexachlorocyclopentadiene was proposed, Section 112, as a hazardous pollutant and as a potential airborne carcinogen. Under the Toxic Substances Control Act, preregulatory assessment is underway pursuant to possible Section 6 control actions.

IV. References

1. 1977 Directory of Chemical Producers, Stanford Research Institute, Menlo Park, California.

2. Farms Chemical Handbook, 1977, Master Publishing Company, Willoughby, Ohio.

3. von Rumker et al. Production, Distribution, Use and Environmental Impact Potential of Selected Pesticides, USEPA Office of Pesticide Programs, EPA 540/1-74-001, 1975.

4. Proprietary information submitted to EPA by Velsicol Chemical Company through 1978 response to "308" letter.

5. Clement Associates, Inc. Dossier on Hexachlorocyclopentadiene, Contract No. EA8AC013, prepared for TSCA Interagency Testing Committee, Washington, D.C. August 1978.

6. Aquatic Fate and Transport Estimates for Hazardous Chemical Exposure Assessments, U.S. Environmental Protection Agency, Environmental Research Laboratory, Athens, Georgia, February 1980.

7. Pesticide Monitoring Journal, 8,33 (1974).

8. Pesticide Monitoring Journal, 3,124 (1969).

9. Clinical Memoranda on Economic Poisons, (1956). U.S. Department of HEW, PHS, CDC, Atlanta, GA.

10. National Cancer Institute, (1977). Bioassay of chlordane for possible carcinogenicity. NCI-CG-TR-8.

11. Ahmed, F. E., et al. Pesticide-Induced DNA damage and its repair in cultured human cells. Mutat. Res. 42:161 (1977).

12. Karel, A. K. and Sapena, S. C. Chronic chlordane toxicity: effect on blood biochemistry of meriones hurrianae.

13. Chlordane Hazard Profile, USEPA, 1979 (draft).

14. Kats, M., 1961. Acute toxicity of some organic insecticide to three species of salmonids and to the threespine stickleback. Trans. Am. Fish. Soc. 90:264.

15. U.S.E.P.A., 1979. Chlordane: Ambient Water Quality Criteria (draft).

16. Clinical Toxicology of Commercial Products. Acute Poisoning. Gleason, et. al.., 3rd Ed., Baltimore, Williams and Wilkins (1969).

17. U.S. EPA 1977. Risk Assessment of chlordane and heptachlor. Carcinogen assessment group. U.S. Environmental Protection Agency, Washington, D.C.

18. Cerey, K., et al. Effect of heptachlor on dominant lethality and bone marrow in rats. Mutat. Res. 21:26 (1973).

19. Mestitzova, M. On reproduction studies on the occurrence of cataracts in rats after long-term feeding of the insecticide heptachlor. Experientia 23:42 (1967).

20. Ahmed, F. E., et al. Pesticide-induced DNA damage and its repair in cultured human cells. Mutat. Res. 42:161 (1977).

21. St. Omer, V. Investigations into mechanisms responsible for seizures induced by chlorinated hydrocarbon insecticides: The role of braim ammonia and glutamine in convulsions in the rat and cockeral. Jour. Neuroceue. 18:365 (1971).

22. Kacew, S. and Singhal, R. L. The Influence of p.p^{1}-DDT, and Chlordane, Heptachlor and Endrin on Hepatic and Renal Carbohydrate Metabolism and Cyclic AMP-adenyl Cyclase system. Life Sci. 13:1363 (1973).

23. NIOSH: Registry of Toxic Effects of Chemical Substances (1978).

24. Morse, D. H. et al., Occupation Exposure to Hexachlorocyclopentadiene: How Safe is Sewage? JAMA. 241-2177-2179 (1979).

25. Goggelman, W. et al., Mutagenicity of Chlorinated Cyclopentadiene Due to Metabolic Activation. Biochem. Pharmacol. 27:2927-2930.

26. Winteringham, P. Chemical Residues and Pollution Program of the Joint Division of the International Atomotic Energy Agency and the Food and Agriculture Organization of the United Nations. Ecotoxicol. Environ. Safety. 1:407-25. (1977)

27. Spechar, R. L. et al, Toxicity and Bio-accumulation of Hexachlorocyclopentadiene, Hexachloronorbornadiene, and Heptachlorobornene in Larval and Early Juveniles Fathead Minnows. Hull. Environ. Contam. Toxicol. 21:576-83.

28. Control of Hazardous Material Spills; Proceedings of the 1978 National Conference on Control of Hazardous Material Spills, Miami Beach, Florida, April 11-13, 1978.

29. Dawson, English, Petty, 1980. "Physical Chemical Properties of Hazardous Waste Constituents".

LISTING BACKGROUND DOCUMENT

CREOSOTE PRODUCTION

- Wastewater Treatment Sludges Generated in the Production of Creosote (T)
- Process Wastewater from Creosote Production (T)

I. Summary of Basis for Listing

The process wastewater and wastewater treatment sludges generated in the production of creosote have been found to contain the toxic substance, creosote and the constituents of creosote, benz(a)anthracene, benzo(b)fluoroanthene and benzo(a)pyrene. Creosote is contained in the CAG list of chemicals having substantial evidence of carcinogenicity, as are its three constituents, benz(a)anthracene, benzo(b) fluoranthene.

The Administrator has determined that solid wastes from creosote production may pose a substantial present or potential hazard to human health or the environment when improperly transported, treated, stored, disposed of or otherwise managed, and therefore should be subject to appropriate managment requirements under Subtitle C of RCRA. This conclusion is based on the following considerations:

1. The hazardous substances likely to be present in the wastes include creosote and its constituents,

benz(a)anthracene, benzo(b)fluoroanthene, and benzo(a)pyrene, all of which are carcinogens. Several reported cases of cancer in humans have been attributed to creosote exposure.

2. If the lagooning/landfilling of these wastes is improperly conducted, the contamination of soil, land, ground, and surface water is likely to result. Since creosote is highly mobile and persistent, there is increased likelihood of hazardous waste constituents reaching environmental receptors. There is a reported incident of surface and groundwater contamination due to improper disposal of creosote contaminated wastes, demonstrating that creosote is capable of migration, mobility and persistence and of causing substantial hazard if improperly managed.

3. It is estimated that 60-115 million lb/yr of creosote is contained in the listed wastewater treatment sludge. Thus, substantial amounts of waste constituents are potentially available for environmental release.

II. Sources of the Waste and Typical Disposal Practices

A. Profile of the Industry

In 1972, creosote was produced by six companies at 25 locations; the estimated 1972 production was 521,000 metric tons (575,000 tons).(1) A complete list of producers, production plants and the estimated 1972 production at each site is presented in Table 1. Creosote is a wood preservative, characterized by a high toxicity to wood-destroying organisms and a very low evaporation rate.(2) Nearly all creosote produced is used for wood preservation. However, creosote has other uses, including as a preservative, insecticide, herbicide, fungicide, disinfectant and tree dressing.

B. Manufacturing Process

Creosote is produced by the distillation of coal

Table 1. CREOSOTE PRODUCTION PLANTS IN THE U.S.[1]

	Estimated Plant Capacity (million lb/year)	Estimated Annual Production (million lb)
ALLIED CHEMICALS CORPORATION		250-350
Detroit, Michigan	100-200	
Ensely, Alabama	100-200	
Ironton, Ohio	100-200	
KOPPERS COMPANY, INC.		350-450
Cicero (Chicago), Illinois	100-200	
Follansbee, West Virginia	100-200	
Fontana, California	200-300	
Houston, Texas	10-20	
Portland, Oregon	10-20	
Kearney (Seaboard), New Jersey	10-20	
St. Paul, Minnesota	10-20	
Swedeland, Pennsylvania	10-20	
Woodward, Alabama	100-200	
Youngstown, Ohio	100-200	
REILLY TAR AND CHEMICAL CORPORATION		50-100
Cleveland, Ohio	10-20	
Granite City, Illinois	10-20	
Ironton (Provo), Utah	10-20	
Lone Star, Texas	10-20	
Chattanooga, Tennessee	10-20	
USS CHEMICALS		250-350
Clairton, Pennsylvania	100-300	
Fairfield, Alabama	100-200	
Gary, Indiana	100-200	
THE WESTERN TAR PRODUCTS CORPORATION		20-40
Memphis, Tennessee	10-20	
Terre Haute, Indiana	10-20	
WITCO CHEMICAL CORPORATION		10-20
Point Comfort, Texas	10-20	
TOTAL ANNUAL PRODUCTION (1972)		930-1,310

tar which is produced by the high temperature carbonization of bituminous coal. A generalized production and waste schematic for creosote is presented in Figure 1.

C. Waste Generation and Management

The two waste streams generated in the production of creosote are (1) the process wastewater and (2) the sludge resulting from the wastewater treatment plant.

During the distillation process, an appreciable quantity of the water contained in the coal tar (1-2 percent of the total volume) (1) is boiled off and disposed of along with other process waters. This aqueous waste from the distillation step in the process is the source of hazardous constituents of both listed waste streams.

Creosote wastewater is either discharged to publicly owned treatment works (at smaller facilities)* or treated on-site in holding ponds (at larger plants). Where on-site treatment is utilized, ponds are dredged periodically, giving rise to the second listed waste stream. Based on the prevalent waste disposal practice in the chemical industry, these wastewater treatment sludges are transferred to a landfill for final disposal.(1)

III. Discussion of Basis for Listing

A. Hazards Posed by the Wastes

1. Creosote Wastewater

*This listing does not include any wastewater which is discharged to a POTW and which is mixed with domestic sewage and that passes through a sewer system before it reaches a POTW.

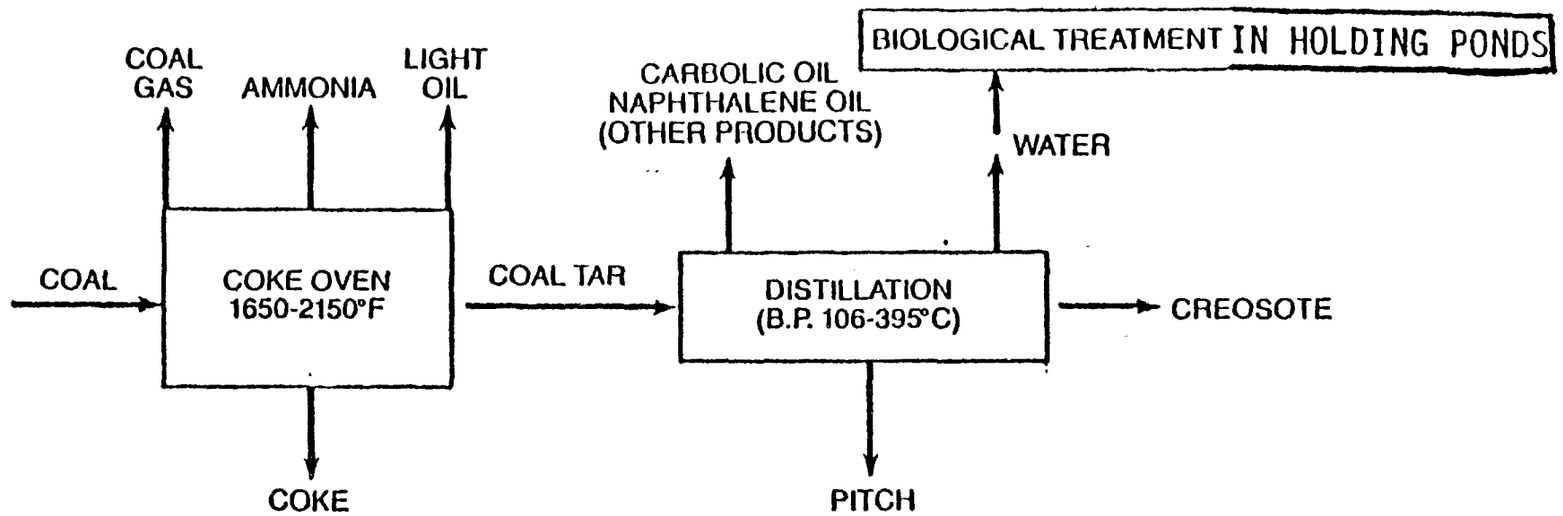

Figure 1. PRODUCTION AND WASTE SCHEMATIC FOR CREOSOTE[1]

The raw wastewater from the production of creosote is expected to contain varying amounts of creosote, the creosote constituents benz(a)anthracene, benz(b)fluoranthrene and benzo(a)pyrene, all of which are polycylic aromatic hydrocarbons, and other distillation intermediates. The actual composition of the constituents in the wastewater from creosote production depends on the source of the coal used to produce the tar, the design and attendant operating conditions (temperature, coking time, gas collection systems) of the coke ovens, and the design and operating parameters of the still (e.g., the feed rate, temperature, and the blending of various tar distillation fractions). As a result of these factors the fractional distillation is ordinarily incomplete so that a certain amount of creosote residue is present in the raw wastewater.

Based on the estimated annual production of 1,150 million lb/yr of creosote,* and a generation of 1 lb creosote per 12 lbs coal tar[6], and a 1-2% volume water content in coal tar which is boiled off in the distillation process and disposed of as wastewater, it is estimated that 60-115 million lbs of creosote per year are present in the raw process wastewater sent to treatment. Obviously, such large quantities of this waste have the propensity for large-scale environmental harm. There is a greater chance that exposure (since larger expanses

*This figure was calculated by rounding off the mean total annual production estimated for 1972 shown in Table 1.

of groundwater may be contaminated) and environmental loading will occur for longer period in light of contaminant availability.

The components of this waste stream are also of considerable concern as potential health hazards. As previously mentioned, these wastes contain benz(a)anthracene, benzo(b) fluoranthene, and benzo(a)pyrene and creosote which are known carcinogens.

As will be demonstrated below, these waste components could be released from holding ponds into the environment, unless proper waste management is assured. Creosote and the other waste constituents may be both mobile and highly persistent, increasing the likelihood of its reaching receptors in concentrations sufficient to cause a substantial hazard should migration occur, the migratory potential via ground and surface water, as well as the persistence of creosote has been demonstrated by the damage incident described below (see damage incident, p. 10). Further, the sheer quantity of creosote and its constituents in the waste could overload the sorptive capacity of the sediments. Accordingly, those constitutents of creosote not adsorbed to sediments are mobile. The following section elaborates on these points.

(a) Wastewater's Constituents' Potential to Migrate and Cause Substantial Hazard

The two most likely exposure pathways for this waste

are groundwater and surface water via migration from holding ponds.

As to the migratory potential of creosote that is present in the waste, creosote has proven, in spite of its relatively low solubility [30] in water (5 ppm), to have sufficient migratory potential and persistence to cause long-term contamination following improper waste disposal. Creosote can be expected to be highly persistent in groundwater, since the chief degradation mechanism is biodegradation,[30] which would not be expected to be a factor in the abiotic conditions of an aquifer. Exposure also may occur via a surface water exposure pathway should precipitation result in flooding of holding ponds.

The waste constituents of creosote: benz(a)anthracene, benzo(b)fluoranthene and benzo(a)pyrene, are also capable of migrating and persisting if these wastes are managed improperly. While these constituents tend to adsorb to organic matter,[30] management could occur on sites with soils low in organic content or with highly permeable soil so that mobility would not be deterred.

The polycyclic aromatic hydrocarbons are persistent in nature, especially soils[10] with half lives, for benzo(a)-anthracene and benzo(a)pyrene, reported to be 7,000 and 21,000 hours, respectively.[11] The Agency possesses no evidence that benzo(a)anthracene, benzo(a)pyrene or benzo(b)fluorathene do not persist. Furthermore, benzo(a)pyrene is bioaccumula-

tive,[30] and benz(a)anthracene is extremely bioaccumulative (octanol/water partition coefficient of 426,579 (30)), so that these constituents could accumulate in harmful concentrations if they reach a receptor.

If this waste is improperly managed, these constituents of creosote may be released and reach environmental receptors and cause substantial hazard. Improper management is certainly reasonably plausible or possible; holding ponds may be sited in areas with highly permeable soils, or they may lack adequate leaching control features. Further, there may be inadequate cover to impede migration of the waste constituents or inadequate flood control measures to impede waste washout in the event of heavy rainfall. Thus, mismanagement could realistically occur, resulting in substantial hazard.

For both the creosote and its related constituents, the Agency presently does not possess information indicating that these compounds would <u>not</u> migrate and persist in the environment and cause a substantial health hazard. Therefore, the Agency would be unjustified in not listing this waste (the treatment sludges) on the basis of these contaminants until such contradictory information is readily available.

Additionally, there has been a documented incident of surface and groundwater contamination due to improper disposal of creosote containing wastes. In the 1950's, waste chemicals including creosote and other types of wood-preserving oils

were injected into wells in Delaware County, Pennsylvania. The injected wastes migrated into groundwater, infiltrated a storm drain sewer, and discharged into a small stream, causing odor and biological damage. Although injection of the wastes into the wells ceased in the 1950's, contamination was first observed in 1961.(5) Thus, the waste constituents proved capable of migration via both ground and surface waters, and were able to persist and cause damage for long periods of time.

2. Creosote Wastewater Treatment Sludge

The wastewater treatment sludges that remain after biological treatment are also hazardous. The carcinogenic constituents of creosote, namely benz(a)anthracene, benzo(b)-fluoranthene and benzo(a)pyrene, are especially likely to be present in the treatment sludge since these constituents adsorb to sediments at very high levels (App. B). Where treatment is incomplete, creosote (which is, however, somewhat amenable to biodegradation (App. B)), is projected to be present in the sludge as well. If these sludges are placed in a leaking landfill, an unlined holding pond or an improperly sited facility (i.e., as in an area with permeable soil) the waste constituents may be released.

As demonstrated above, the waste constituents of concern are capable of migrating and persisting and reaching environmental receptors if managed improperly. Since the waste constituents include benz(a)anthracene, benzo(b)fluoranthene,

benzo(a)pyrene and, creosote, which are known carcinogens should substantial environmental harm can result from exposure even to minute concentrations* if mismanagement should occur.

B. Health and Ecological Effects

1. Creosote

Health Effects - Creosote is carcinogenic in animals[25] and has been associated with several occupational cases of skin cancer over a fifty year period.[26] Creosote has also been identified by the Agency as a compound which exhibits substantial (31) evidence of carcinogenicity. This chemical is mutagenic in a variety of bioassay test systems,[25] and reportedly affects fetal development.[27]

Creosote is toxic in rats (oral LD_{50} = 275 mg/Kg], while death in humans has resulted from ingestion of much smaller doses.[24]

Additional information and specific references on adverse effects of creosote can be found in Appendix A.

Ecological Effects - Creosote is a mixture of chemical compounds, and while there was an abundance of data on its various components, data were somewhat limited on creosote itself. Ellis[14] found fish kills occurring at concentrations

*See 44 Fed. Reg. 15926, 15930 (March 15, 1979) (no zero exposure level for carcinogens).

as low as 6.0 mg/l in less than 10 hours. Applegate, et al.,[13] in a large battery of tests with a limited number of animals, including rainbow trout Salmo gainneri and lamprey larvae ptromyzon marinus, found that concentrations of 5.0 mg/l induces mortality.

It has been reported that PAH's from a contaminated lagoon were accumulated to a greater degree of biota species near the top of the food chain.[12] One PAH, benzo(a)pyrene, has been reported to accumulate in mussels taken from PAH-treated pilings.[3]

Regulatory Recognition of Hazards - The Office of Toxic Substances has issued an RPAR on creosote and is continuing preregulatory assessment under Section 6 of the Federal Insecticide, Fungicide and Rodenticide Act.

Industrial Recognition of Hazard - Sax, Dangerous Properties of Industrial Materials, designates creosote as moderately toxic via oral, inhalation, and dermal routes.

2. Benz(a)anthracene, Benzo(b)fluoranthene and Benzo(a)pyrene.

Health Effects - Benz(a)anthracene and Benzo(b)fluoranthene are carcinogenic in animals.[28,29] Benzo(a)pyrene has been tested extensively for carcinogenicity and found to exert positive results by all routes tested.[22] The Agency has also identified these compounds as carcinogenic[31].

Additional information and specific references on the adverse effects of benz(a)anthracene, benzo(a)pyrene and benzo(b)-

fluoranthene can be found in Appendix A.

Ecological Effects - Eighty-seven percent of freshwater fish exposed to 1,000 ug/l benz(a)anthracene for six months died.[18]

Regulations - Benz(a)anthracene and benzo(b)fluoranthene are undergoing pre-regulatory assessment by the Office of Water and Waste Management under the Safe Drinking Water Act for health effects other than oncogenicity. The Office of Water and Waste Management under the Safe Drinking Water Act is also conducting a pre-regulatory assessment of benzo(a)-pyrene based on its carcinogenicity and other health effects.

References

1. von Rumker et al, Production, Distribution, Use and Environmental Impact Potential of Selected Pesticides, EPA 540/1-74-001, 1975.

2. Farm Chemicals Handbook, 1977, Meister Publishing Company, Willoughby, Ohio.

3. American Wood Preservers' Association (1976). A.V.P.A. Book of Standards, Washington, D.C.

4. NIOSH Registry of Toxic Effects of Chemical Substances, U.S. Department of Health, Education and Welfare.

5. Damage incident, U.S. Environmental Protection Agency, open file, unpublished data.

6. Telephone communication to: Mr. J. Burroughs, Manager, Allied Chemical Corporation, Detroit, Michigan, 12 February 1980. (S. Quinbran, TRW.)

7. (1978) Wood Preservative Pesticides - Notice of Rebuttable Presumption. Federal Register - Vol. 43:48154-48295.

8. I. S. Schipper (1961). The Toxicity of Wood Preservatives for swine. Am. J. Vet. Res. 22:401-405.

9. (1978) NIOSH. Registry of Toxic Effects of Chemical Substances.

10. National Academy of Science. 1972. Particulate Polycyclic Organic Matter. Committee on Biological Effects on Atmospheric Pollutants, Div. of Med. Sci., Natl. Res. Council, Natl. Acad. Sci., Washington, D.C. 361 pp.

11. Herbes, S. and L. Schwall. 1978. Microbial Transformation of Polycyclic Aromatic Hydrocarbons in Pristine and Petroleum Contaminated Sediments. Appl. Environ. Microbial. 35(2): 306-316.

12. Naiussat, P. and C. Auger 1970. Distribution of benzo-(a)pyrene and Perylene in various organisms of the Cliperton Lagon Ecosystem. C.R. Acad. Siv., Ser. D. 270(22): 2702-2705.

13. Applegate, V.C., J.H. Howall, and A.E. hall, Jr. 1957. Toxicity of 4346 chemicals to larval lampreys and fishes. Dept. of Interior, Special Sci. Rept. No. 207.

14. Ellis, M.M. 1943. Stream pollution studies in the State of Mississippi. U.S. Dept. of Interior, Special Sci. Rept. No. 3

15. Gleason, et al 1969. Clinical toxicology of commercial products. Acute poisoning. 3rd ed. Baltimore, Williams and Wilkins, p.42.

16. NIOSH, 1978. Registry of Toxic Effects of Chemical Substances. DHEW Publication No. 79-100, p. 370. (crossed out in notes)

17. Patty, F.A. 1963, Industrial Hygiene and Toxicology, Vol. 2, 2nd ed. New York, Interscience.

18. U.S. EPA. 1979. Environmental Criteria and Assessment Office. Benz(a)anthracene: Hazard Profile. (draft)

19. U.S. EPA. 1979. Environmental Criteria and Assessment Office. Benz(b)fluoranthene: Hazard Profile (draft)

20. U.S. EPA. 1979. Investigation of selected environmental contaminants: Acrylamides.

21. U.S. EPA. 1979. Environmental Criteria and Assessment Office. Acrylamide: Hazard Profile (draft)

22. U.S. EPA. 1979. Environmental Criteria and Assessment Office. Benzo(a)pyrene: Hazard Profile (draft)

23. Toxicol. Appl. Pharmacol. 6:378 (1964).

24. Gleason, et al., (1969) Clinical Toxicology of Commercial Products. Acute poisioning. 3rd ed. Baltimore, Wiliams and Wilkins, p.42.

25. Wood Preservation Pesticides - Notice of Rebuttle Resumptin. Fed. Reg. 43:48154-48295 (1978).

26. Farm Chemicals Handbook. (1977) Meister Publishing Company, Willoughby, Ohio.

27. Schipper, I.S. The Toxicity of Wood Preservatives for Swine. Am. J. Vet. Res. 22:401-405 (1961).

28. U.S. EPA. (1979) Environmental Critera and Assessment Office. Benz(a) anthracene: Hazard Profile (draft).

29. U.S. EPA. (1979) Environmental Criteria and Assessment Office. Benz(b) fluoranthene: Hazard Profile (draft).

30. Dawson, English, and Petty, 1980, "Physical Chemical Properties of Hazardous Waste Constituents.

31. Cancer Assessment Groups List of Carcinogenic Compounds, April 22, 1980.

LISTING BACKGROUND DOCUMENT

DISULFOTON PRODUCTION

Wastewater Treatment Sludges from the Production of Disulfoton (T)

Still Bottoms from Toluene Reclamation Distillation in the Production of Disulfoton (T)

I. SUMMARY OF BASIS FOR LISTING

The organic waste streams from disulfoton production contain a variety of intermediate products which are toxic (i.e., toluene and o,o,o-triethyl ester of phosphorodithioic acid).

The Administrator has determined that the solid waste from disulfoton production may pose a substantial present or potential hazard to human health or the environment when improperly transported, treated, stored, disposed of or otherwise managed, and therefore should be subject to appropriate management requirements under Subtitle C of RCRA. This conclusion is based on the following considerations:

1. It is estimated that disulfoton production is responsible for generating approximately 300 lbs/day of wastewater treatment sludges. The sludge is expected to contain the toxic constituents toluene and o,o,o triethyl ester of phosphorodithioate.

2. It is estimated that 120 metric tons/yr of still bottoms containing o,o,o-triesters of phosphorodithioic acid and toluene are generated from the production of disulfoton.*

*The Agency is aware that these wastes also contain the toxic organic, disulfoton. However, due to the propensity of disulfoton to rapidly hydrolize, it will not persist in the waste for extended periods of time. Based on this fact, the Agency will not presently regulate these wastes on the basis of disulfoton contamination.

3. Disposal of these wastes, even in drums, in improperly designed or operated landfills represents a potential hazard due to the migratory potential of these hazardous compounds.

II. SOURCES OF THE WASTE AND TYPICAL DISPOSAL PRACTICES

A. Profile of the Industry

Disulfoton is produced in this country by only one manufacturer, Mobay Chemical Corporation, at its Chemagro Agricultural Division in Kansas City, Missouri.(1) Production for 1974 was estimated at 10 million pounds.(2) _____ *.

Disulfoton is a systemic insecticide, primarily used to control sucking insects, especially aphids and plant-feeding mites. It was developed in the 1950's and has been in commercial use for about 15 years. Agricultural uses accounted for almost all of the estimated U.S. consumption in 1972. Small quantities are used on ornamentals in the home and garden market in the form of dry granules of very low active ingredient content.(3)

B. Manufacturing Process

Disulfoton is produced according to the following three-step scheme(4):

$$\text{(A)}\quad P_2S_5 + \underset{\text{Ethanol}}{4C_2H_5OH} + 2NaOH \xrightarrow[\text{Solvent}]{\text{Toluene}} \underset{\text{"Diethyl Salt" (DES)}}{2(C_2H_5O)_2P(S)SNa} + H_2S + 2H_2O$$

* The underlined data are those obtained from proprietary reports and data files.

(B) $PCL_3 + 3HOC_2H_4\text{-}S\text{-}C_2H_5 \longrightarrow 3ClC_2H_4\text{-}S\text{-}C_2H_5 + H_3PO_3$

"Thio-Alcohol" "Chloro Thio Alcohol" (CTA)

(C) $(C_2H_5O)_2P(S)SNa + ClC_2H_4\text{-}S\text{-}C_2H_5 \rightarrow (C_2H_5O)_2P(S)\text{-}S\text{-}C_2H_4\text{-}S\text{-}C_2H_5 + NaCl$

DES CTA Disulfoton

A process flow diagram and waste schematic is shown in Figure 1. The reaction between P_2S_5 and ethanol in toluene solvent occurs and produces the diethyl phosphorodithioic acid. The major side product of the reaction is the o,o,o-triethylester of the phosphorodithioic acid*. The dithioic acid is next converted on the diethyl salt (DES) with caustic soda. These two substeps are summarized in reaction (A) (see equation on page 2 and corresponding (A) in Figure 1).

The DES is separated in the toluene recovery unit while the remaining mixture of toluene, triester, and other organic residues is sent to a toluene recovery unit. The toluene is recycled to the salt production process and the still bottoms (Waste Stream II in Figure 1) containing o,o,o-triethyl ester of phosphorodithioic acid go to disposal.

PCl_3 and thio alcohol are then reacted to form the chloroethyl thioethyl ester ("chloroethyl thioethyl alcohol, CTA") and phosphorous acid (Reaction B, above, and corresponding (B) in Figure 1).

The third step of the production process, reaction C above, involves the reaction between the diethyl salt (DES) and chlorothio-alcohol (CTA) to form disulfoton and sodium chloride. This is shown in Figure 1 as the disyston unit, and marked (C).

---

*Also referred to in this document as o,o,o-triester.

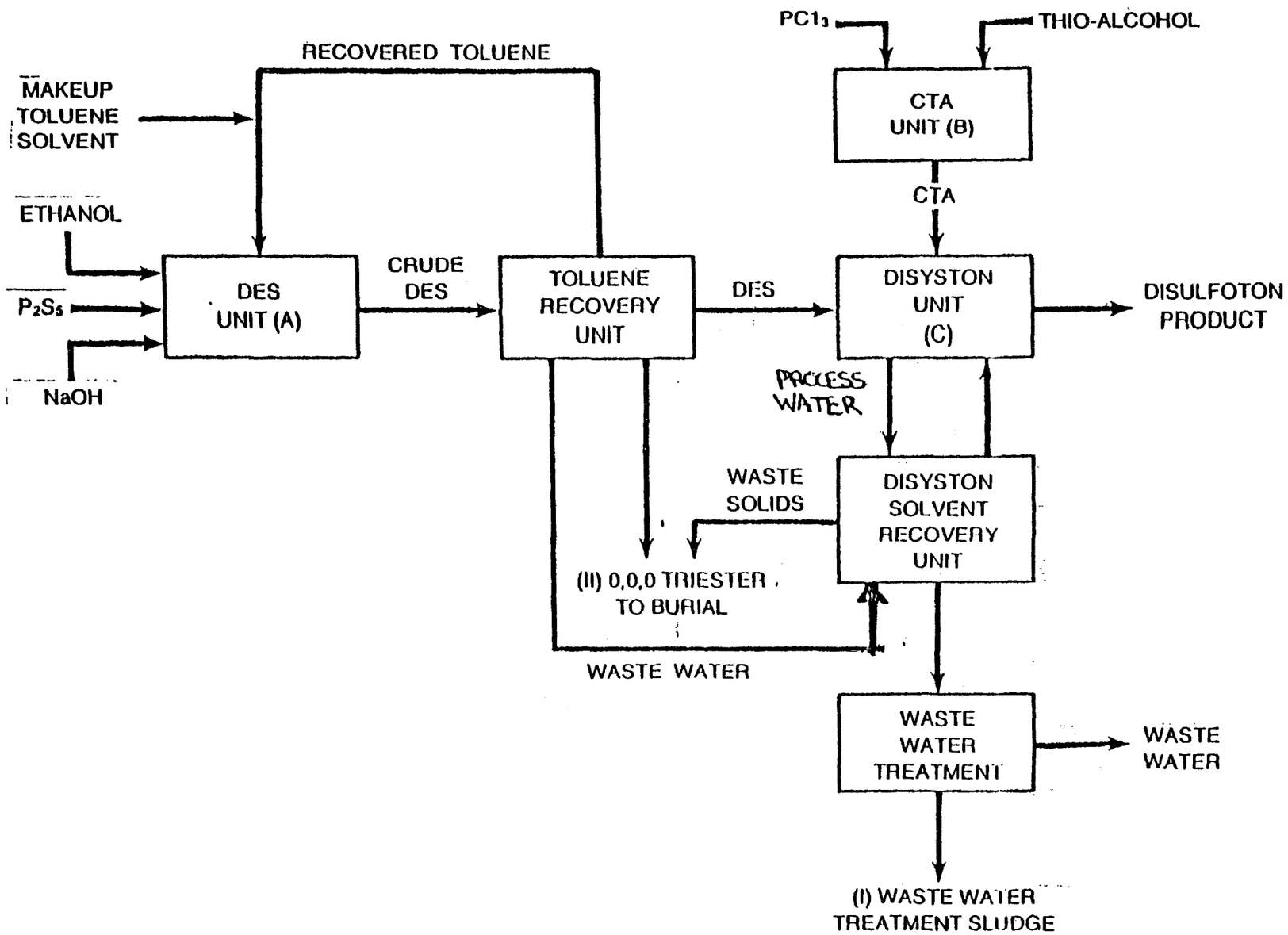

Figure 1. PRODUCTION AND WASTE SCHEMATIC FOR DISULFOTON [ADAPTED FROM CHEMAGRO DRAWING (3)]

Treatment of waste water from the manufacturing process results in a sludge (Waste Stream I in Figure 1).

C. Waste Generation and Management

As indicated in Figure 1, the diethyl salt from the DES unit is separated for further processing and the toluene, triester and other waste solids are sent to a toluene recovery unit. The recovered toluene is recycled back to the production process; the waste stream from this process (Stream II, Figure 1) is composed of the unrecovered toluene, o,o,o-triester of phosphorodithioic acid and associated organic residues. This waste is combined with waste solids from the downstream disyston recovery unit and sent for burial in landfills.[8]

The disyston unit process water, along with wastewater from the toluene recovery unit, is sent to the disyston solvent recovery unit where some disulfoton is recovered and recycled to the disyston unit.

---*

The sludge from wastewater treatment (Waste Stream I in Figure 1) is disposed of by landfill; ___

___(11)

---

*/ The waste stream from the disyston recovery unit is not specificically listed as hazardous, but the combined waste stream is deemed hazardous under the 'mixing' provision of §261.3.

III. DISCUSSION OF BASIS FOR LISTING

A. Hazards Posed by the Wastes

There are two solid waste streams which are considered in this document. As previously mentioned, both waste streams contain toxic constituents which pose a potential hazard if improperly managed and disposed.

The still bottoms from the toluene recovery unit (Waste Stream II) are expected to contain triesters and unreacted toluene. There is little information on the toxicity of the triesters; however, the compound is structurally similar to o,o,s-triethylester, a member of a family of compound which is very toxic (LD_{50} = 80 mg/kg after 8 days)[22]. Toluene is a toxic chemical with such acute toxic effects in humans exposed to low concentrations (200 ppm) as excessive depression of the nervous system.[16]

The wastewater treatment sludges (Waste Stream I) also contain toluene solvent and o,o,o-triethylester of phosphorodithioic acid, which is a process intermediary. (For information on the toxic effects of these compounds, see Section III B.)

1. Exposure Pathways

As noted above, the typical disposal method for both of these wastes is in landfills. Disposal of these wastes in landfills, even if

plastic lined drums are used, represents a potential hazard if the landfill is improperly designed or operated (the drums corrode in the presence of even small amounts of water). This can result in leaching of hazardous compounds and subsequent contamination of ground water.

As a result, the waste constituents of concern may migrate from improperly designed and managed landfills and contaminate ground and surface waters. Toluene is highly soluble (470 ppm)[24] and by virtue of its solvent properties, can facilitate mobility and dispersion of other toxic constitutents assisting their movement toward ground and surface waters. The migratory potential of toluene is confirmed by the fact that toluene has been detected migrating from the Love Canal site into surrounding residential basements and solid surfaces, demonstrating ability to migrate through soils ("Love Canal Public Helath Bomb", A Special Report to the Government and Legislature, New York State Department of Health (1978)). Thus, once toluene migrates from the matrix of the waste, it is likely to persist in soil and groundwater. There also may be a danger of toluene migration and exposure via an air inhalation pathway if disposal sites lack adequate cover. Toluene is relatively volatile (28.4 mm Hg (24)) and is mobile and persistent in air, having been found in school and basement air at Love Canal ("Love Canal Public Health Bomb", supra).

Although very little information is available on the characteristics of o,o,o-triethylesters, the Agency is aware of the hazardous characteristics of the same family of compounds as this particular triester. The Agency

would require some assurance that the waste components will not migrate and persist to warrant a decision not to list the waste. No such assurance appears readily available.

Thus, these waste constituents could leach into groundwater if landfills are unlined, or have inadequate leachate collection systems. Waste management facilities located in areas with highly permeable soils would likewise facilitate leachate migration.

There also may be a danger of toluene migration and exposure via an air inhalation pathway if disposal sites lack adequate cover. Toluene is relatively volatile (28.4 mm Hg (24)) and is mobile and persistent in air, having been found in school and basement air at Love Canal ("Love Canal Public Health Bomb," supra).

B. Health and Ecological Effects

1. Toluene

Health Effects - Toluene is a toxic chemical absorbed into the body by inhalation, ingestion, and through the skin. The acute toxic effect in humans is excessive depression of the central nervous system,[15] and this occurs at low concentrations [200 ppm].[16] Chronic occupational exposure to toluene has led to the development of neuro-muscular disorders.

Since toluene is metabolized in the body by a protective enzyme system which is also involved in the elimination of other toxins, it appears that over-loading the matabolic pathways with toluene will greatly reduce the clearance of other, more toxic chemicals. Additionally, the high affinity of toluene for fatty tissue can assist in the absorption of other

toxic chemicals into the body. Thus, synergistic effects of toluene on the toxicities of other contaminants may render the wastes more hazardous. Toluene is designated as a priority pollutant under Section 307(a) of the CWA. Additional information and specific references on the adverse effects of toluene can be found in Appendix A.

Ecological Effects - Toluene has been shown to be acutely toxic to freshwater fish and to marine fish. Chronic toxicity is also reported for marine fish.[18]

Regulations - Toluene has an OSHA standard for air TWA of 200 ppm. The Department of Transportation requires a "flammable liquid" label.

Industrial Recognition of Hazard - Toluene is listed as having a moderate toxic hazard rating via oral and inhalation routes (Sax, Dangerous Properties of Industrial Materials).

2. Phosphorodithioic and Phosphorothioic Acid Esters (Triesters)

Health Effects - The -s,s-methylene o,o,o,o-tetraethyl ester is extremely toxic by various routes of administration to animals [oral rat LD_{50} = 13 mg/kg].[19] Toxic effects in the blood of humans have been observed at minute doses [100 micrograms/kg],[20] while human death from ingestion of this chemical has also occurred at low doses [50 mg/kg].[21] The phosphorothioic acid -o,o,o-triethylester is a member of a family of compounds, which, when given orally to rats is very toxic [LD_{50} = 80 mg/kg after 8 days].[22] The -o,o,s-trimethyl ester is extremely toxic to rats [LD_{50} = 15 mg/kg].[23] Additional information and specific references on adverse effects of phosphorodithioic and phosphorothioic

acid esters can be found in Appendix A.

Industrial Recognition of Hazard - Sax (Dangerous Properties of Industrial Materials), lists triethyl phosphorothioate (phosphorothioic acid, o,o,o-triethyl ester) as being highly toxic via ingestion and inhalation.

IV. References

1. 1977 Directory of Chemical Producers, Stanford Research Institute, Menlo Park, California.

2. Kelso, G. L, R. Wilkenson, T. L. Ferguson, and J. R. Maloney, Development of Information on Pesticides Manufacturing for Source Assessment, Final Report, Midwest Research Institute, EPA Contract No. 68-02-1324, July 30, 1976.

3. von Rumker et al, Production, Distribution, Use and Environmental Impact Potential of Selected Pesticides, USEPA Office of Pesticide Programs, EPA 540/1-74-001, 1975.

4. Lawless, E. W., R. von Rumker, T. L. Ferguson, The Pollution Potential in Pesticide Manufacturing, TS-00-72-04, June 1972.

5. Cotton, F. A. and G. Wilkinson, Advanced Inorganic Chemistry, New York, Interscience Publishers, 1972.

6. Bailer, J. C., Comprehensive Inorganic Chemistry, Volume 2, New York, Pergamon Press, 1973.

7. Fezt, C., and K. J. Schmidt, The Chemistry of Organophosphorous Pesticides, New York, Springer-Verlag, 1973.

8. Parsons, T., Editor, Industrial Process Profiles for Environmental Use: Chapter 8, Pesticide Industry, EPA-600/77-023h, Technology Series, EPA PB-266 225.

9. Marcus, M., J. Spigarelli and H. Miller, Organic Compounds in Organophosphorous Pesticide Manufacturing Wastewaters, Midwest Research Institute, Kansas City, Missouri, Contract No. 68-03-2343, 1977.

10. Office of Water Programs, Applied Technology Division, The Pollution Potential in Pesticide Manufacturing, TS-00-72-04.

11. Proprietary information submitted to EPA by Mobay Chemical Corporation through 1978 response to "308" letter.

12. Office of Water and Hazardous Materials, Effluent Guidelines Division, Development Document for Interim Final Effluent Limitations Guidelines for the Pesticide Chemicals Manufacturing Point Source Category, Washington, 1976.

13. NIOSH (1978) Registry of Toxic Effects of Chemical Substances. Pyridene.

IV. References (Continued)

14. Gleason, M.N., et al. Clinical Toxicology of Commercial Products. Acute Poisoning. (1969) 3rd Ed., p. 61.

15. U.S. EPA (1979) Toluene Ambient Water Quality Criteria.

16. NIOSH (1978) Registry of Toxic Effects of Chemical Substances. Toluene.

17. U.S. EPA. 1979. Toluene Ambient Water Quality Criteria. (Draft).

18. U.S. EPA. 1979. Toluene: Hazard Profile. Environmental Criteria and Assessment Office, U.S. EPA, Cincinnati, Ohio.

19. Pharmaceutical Journal 185:361 (1960).

20. Toxicol. Appl. Pharmacol. 22:286 (1972).

21. Clinical Toxicology of Commercial Products. Acute Poisoning. Gleason, M.N., et al. (1969) 3rd Ed., p. 65.

22. Mallipute et al. J. Agric. Food Chem. 27:463-466 (1979).

23. Fukukto et al. Quarterly Progress Reports to EPA, August 1978 - November, 1979. EPA Grant No. R804345-04.

24. U.S. EPA. 1980. Physical Chemical Properties of Hazardous Waste Constituents. (Prepared by Southeast Environmental Research laboratory; Jim Felco, Project Officer.

LISTING BACKGROUND DOCUMENT

PHORATE PRODUCTION

Wastewater Treatment Sludges from the Production of Phorate (T)

Filter Cake from the Filtration of Diethylphosphorodithioic Acid in the Production of Phorate (T)

Wastewater from the Washing and Stripping of Phorate Production (T)

I. Summary of Basis for Listing

The hazardous wastes from phorate production are: (1) wastewater treatment sludges from the production of phorate, (2) filter cake from the filtration of diethylphosphorodithioic acid, and (3) wastewater from the washing and stripping of phorate product.

The Administrator has determined that these solid wastes from phorate production may pose a substantial present or potential hazard to human health or the environment when improperly transported, treated, stored, disposed of or otherwise managed, and therefore should be subject to appropriate management requirements under Subtitle C of RCRA. This conclusion is based on the following considerations:

1) Wastes from the production of phorate may contain phorate, formaldehyde, esters of phosphorodithioic acid and phosphorothioic acid.

2) Phorate is extremely toxic and formaldehyde has been evaluated by the Agency as exhibiting substantial evidence of carcinogenicity. The other constituents expected to be present in the waste are also toxic.

3) Disposal of these wastes in improperly designed or operated landfills presents a potential hazard due to the risk of these hazardous compounds leaching into groundwater. As

these hazardous compounds are likely to persist in groundwater, drinking water supplies derived from these sources are likely to be contaminated.

5) Mismanagement of incineration operations could result in the release of hazardous vapors to the atmosphere and present a significant opportunity for exposure of humans, wildlife and vegetation in the vicinity of these operations to potentially harmful substances.

II. Sources of the Wastes and Typical Disposal Practices

A. Profile of the Industry

The principal use of phorate is as a soil and systemic insecticide used to control a wide range of insects on a variety of crops: alfalfa, barley, beans, corn, cotton, hops, lettuce, peanuts, potatoes, rice, sorghum, sugar, beets, sugar cane, tomatoes and wheat[3].

Phorate is produced in this country by two manufacturers, American Cyanamid at Hannibal, MO[1,6] and Mobay Chemical in Kansas City, MO.*

B. Manufacturing Process

A generalized production and waste schematic for phorate is shown in Figure 1. Phorate is made by the reaction of o,o-diethyl hydrogen phosphorodithioate with formaldehyde, followed by the addition of ethyl mercaptan (ethanethiol). The o,o-diethyl hydrogen phosphorodithioate is condensed with formaldehyde and ethyl mercaptan. The reaction chemistry is as follows[4]:

---

* (2) The Agency has been informed, however, that American Cyanamid no longer produces phorate.

All underlined information is from proprietary reports and data.

$$P_2S_5 + C_2H_5OH \longrightarrow 2\ (C_2H_5O)_2P(=S)SH + H_2S$$

phosphorous pentasulfide; ethanol; o,o-diethyl hydrogen phosphorodithioate

$$(C_2H_5O)_2P(=S)SH + H_2C{=}O \longrightarrow (C_2H_5O)_2P(=S)S{-}CH_2OH$$

0,0-diethyl hydrogen phosphorodithioate; formaldehyde; dithiophosphate

$$(C_5H_5O)_2P(=S){-}S{-}CH_2OH + C_2H_5SH \longrightarrow (C_2H_5O)_2P(=S){-}SCH_2SEt + H_2O$$

ethyl mercaptan; Phorate

These reactions indicate the source of the waste constituents of concern.

C. Waste Generation and Management

Based on the generalized flow diagram shown in Figure 1, three hazardous waste streams from the production of phorate are expected to be generated. (See figure 1.) These are:

(a) Process wastewater: The wastewater is likely to contain significant concentrations of phorate, and lesser concentrations of other process waste constituents including formaldehyde, phosphorodithioc and phosphorothioc acid esters, and other main reaction byproducts. (2) (2) (2)*

* [illegible]

Figure 1 is Confidential

(b) Filter Cake: The filter cake is expected to contain high concentrations of esters of phosphorodithioic acid and esters of phosphorothioic acid. These esters are formed immediately prior to filtration in the dithio acid unit, and filtration is intended to remove the esters from the process stream.

(c) Wastewater Treatment Sludges: Wastewater treatment sludges result from the treatment of process waters. The sludges are expected to contain high concentrations of phorate because of its relative insolubility in water (about 50 ppm).(7) Lesser concentrations of other process constituents are also expected to be found in the sludge.

III. Discussion of Basis for Listing

A. Hazards Posed by the Waste

These waste streams contain phorate, which is extremely toxic, and formaldehyde, a CAG carcinogen, and o,o,o-triethyl esters of both phosphorothioic acid and phosphorodithioic acid (as well as other triethyl esters which may be present), which are toxic. The presence of phorate and formaldehyde in particular, even in small concentrations, is of considerable regulatory concern, and the Administrator would require strong assurance that these waste constituents are incapable of migration, mobility, and persistence if improperly managed, before determining not to list these wastes as hazardous.

Such assurance is not forthcoming. Of the constituents likely to be found in the waste stream, phorate, o,o,o-triethyl esters of both phosphorothioic acid, and formaldehyde are able to reach environmental receptors upon release, and can persist. Phorate is moderately soluble (50 ppm), could be transported through permeable soil, and, although subject to some hydrol-

yzation and biodegradation, will persist for weeks in both surface waters and groundwater[38]. o,o,o,-Triethyl esters of phosphorothioic acid are soluble and persist in both surface water and groundwaters.[38] Formaldahyde is quite soluble and has great migratory potential.[38] If disposed of in areas with inorganic or permeable soils, it could become highly mobile. Formaldahyde also persists in surface and groundwaters[38]. Based upon estimates of EPA,[7] exposure to these compounds is likely via drinking water supplies derived from groundwater sources within areas adjacent to mismanaged land disposal sites. The projected widespread movement of these compounds when discharged to surface waters will also probably result in exposure of aquatic life forms in rivers, ponds, and lakes. Another waste constituent, o,o-diethyl ester of phosphorodithioic acid, is less persistent than the prevously discussed compounds, but sufficiently soluble and resistant to degradation to result in widespread movement[7]. Thus, if improperly managed, these constituents are fully capable of migration, mobility, and persistence in substantial concentrations.

As the subject waste streams contain extremely hazardous constituents which may be mobile and persistent upon release, disposal of these wastes landfills can create a potential hazard if landfills are improperly designed or operated. Disposal of these wastes in lagoons or treatment of wastes in holding ponds prior to final disposal, also presents substantial potential hazards as well. Unless lagoons are properly designed and operated (e.g., by lining the site with appropriate liners and employing leachate collection systems), a strong potential exists for contamination of soil and groundwaters via leachate percolation. Heavy precipitation

may result in flooding of the lagoon, thus, surface waters can become contaminated.

In light of the hazards associated with these waste constituents, and their potential for mobility and persistence in substantial concentrations if mismanaged, the wastes are deemed to be hazardous.

B. Health and Ecological Effects

1. Phorate

Health Effects - Phorate is extremely toxic in animals by all routes of administration [oral rate LD_{50} = 1.1 mg/kg].[9-11] Death in humans has been reported as a result of ingestion of extremely small doses.[12] Inhalation of phorate by mice caused adverse effects on reproductive performance at very low concentrations (3.0 ppm),[13] while the lethal dose by inhalation in rats is also very low [11 mg/kg].[14] Minute oral dosages of this chemical (in the range of 0.05-1.24 mg/kg) caused significant depression of a neurotransmitter (cholinesterase) and mortality.[15] Phorate metablites are at least twice as toxic as phorate.[16,17] Additional information and specific references on adverse effects of phorate can be found in Appendix A.

Industrial Recognition of Hazard - Sax (Dangerous Properties of Industrial Materials) lists the toxic hazard rating of phorate as very high via oral and dermal routes.

2. Formaldehyde

Health Effects - Formaldehyde is reportedly carcinogenic[18] with

nasal cavity tumors detected in two studies. It has also been mutagenic in several bacterial and human cell culture assays.[19-22] Formaldehyde is very toxic to animals by all routes of administration [23-27], causing death in humans in small amounts (36 mg/kg).[28] Additional information and specific references on adverse effects of formaldehyde can be found in Appendix A.

Ecological Effects - Formalin, an aqueous solution of formaldehyde can cause toxic effects to exposed aquatic life.[29] It is lethal to *Daphnia Magna*.[30]

Regulatory Recognition of Hazard - Formaldehyde is a chemical evaluated by CAG as having substantial evidence of carcinogenicity.[39] OSHA has set a standard air TWA limit of 3ppm for formaldehyde.

Industrial Recognition of Hazard - Sax, *Dangerous Properties of Industrial Materials*, lists formaldehyde as highly toxic to skin, eyes, and mucous membranes.

3. Phosphorodithioic and Phosphorothioic Acid Esters

Health Effects - The phosphorodithioic acid s,s'-methylene-o,o,o',o'-tetraethyl ester is extremely toxic by various routes of administration to animals [oral rat LD_{50} = 13 mg/kg].[33] Toxic effects in the blood of humans have been observed at minute doses (100 ug/kg)[34], while human death from ingestion of this chemical has also occurred at low doses [50 mg/kg].[35]

The phosphorothioic acid o,o,o-triethyl ester is similar to the

o,o,s-triethyl ester, which is very toxic when given orally to rats [LD_{50} = 80 mg/kg].[36] The o,o,s-triethyl ester is extremely toxic to rats [LD_{50} = 15 mg/kg].[37] Additional information and specific references on adverse effects of phosphorodithioic and phosphorothioic acid esters can be found in Appendix A.

Industial Recognition of Hazards - Sax, Dangerous Properties of Industrial Materials, lists triethyl phosphorothioate (phosphorothioic acid, o,o,o-triethyl ester) as being highly toxic via ingestion, inhalation and skin absorption.

IV. References

1. 1977 Directory of Chemical Producers, Stanford Research Institute, Menlo Park, California.

2. Proprietary information submitted to EPA by American Cyanamid through 1978 response to "308" letter.

3. Farm Chemicals Handbook, 1977; Meister Publishing Company, Willoughby, Ohio.

4. Lawless, E. W. et al. The Pollution Potential in Pesticide Manufacturing USEPA, Office of Water Programs, Technical Studies Report TS-00-72-04, 1972.

5. NIOSH Registry of Toxic Effects of Chemical Substances, U.S. Department of Health, Education, and Welfare, 1978.

6. Personal Communication, S. R. Hathaway, American Cyanamid to D. K. Oestreich, 11 February 1980.

7. Aquatic Fate and Transport Estimates for Hazardous Chemical Exposure Assessments. U.S. EPA, Environmental Research Laboratory, Athens, GA. February, 1980.

8. Martin, H., Pesticide Manual, 4th Edition.

9. Tox. Appl. Pharmacol.

10. American Cyanamide. Cited in USEPA Initial Scientific and Minieconomic Review of Phorate. 1974.

11. Drinking Water and Health. (1977) National Academy of Sciences, Washington, D.C.

12. Clinical Toxicology of Commercial Products. Acute Poisoning. Gleason, M.N., et al., 1969,3rd ed., p. 142.

13. Hazard Profile on Phorate. Greenberg, M. ECAO/RTP NC, 1980, p. 2.

14. National Technical Information Service #PB 277-077.

15. Tusing, T.W. 1956 Unpublished report of American Cyanamid. Cited in USEPA Initial Scientific and Minieconomic Review of Phorate, 1974.

16. Rombunski, et al. (1958) as cited in Drinking Water and Health. (1977) National Academy of Sciences, Washington, D.C.

17. Curry, et al. J. Agric. Food Chem. 9:469-477 (1961).

18. U.S. EPA. (1979) The carcinogenic assessments group's Preliminary Risk Assessment on Formaldehyde. Type I - Air Progrsms. Office of Research and Development.

19. Auerbach, C., Moutschen-Dahen, M., and Mouytschen, J. Genetic and Cytogenetic Effects of Formaldehyde and Related Compounds. Mutat. Res. 39:317-361 (1977).

20. U.S. EPA. (1976) Investigation of Selected Potential Environmental Contaminants: Formaldehyde. EPA-560/2-76-009.

21. Wilkins, R.J. and MacLeod, H.D. Formaldehyde-Induced DNA Protein Crosslinks in E. Coli. Mutat. Res. 36:110-16 (1976).

22. Obe, G. and Beck, B. Mutagenic activity of Aldehydes. Drug Alcohol Depend. 4:91-4 (1979).

23. Union Carbinde Data Sheet. Industrial Medicine and Toxicology Dept., Union Carbide Corp., 270 Park Ave., New York, N.Y. April, 1967.

24. J. Ind. Hyg. Toxicol. 23:259 (1941).

25. ACTA Pharmalogica et Toxicologica 6:299 (1950)

26. J. Ind. Hyg. Toxicol. 31:343 (1949).

27. Journal of the National Cancer Institute. (U.S. Governemnt Printing Office, Supt. of DOC., Washington, D.C.) 30:31 (1963).

28. Practical Toxicology of Plastics. (1968) Lefaux, R. Cleveland, Ohio Chemical Rubber Company, p. 328.

29. Chemical Industry Institute of Toxicology. 1979. Statement concerning research findings.

30. Dowden, B.F. and M.J. Barrett. 1965. Toxicity of Selected Chemicals to Certain Animals. Jour. Water Pollut. Control Fed. 3:1308.

31. Fairchild, E.J. and Stokinger, H.E. Toxicologic Studies on Organic Sulfur Compounds. 1. Acute Toxicity of Some Aliphatic and Aromatic Thiols (Mercaptans). Am. Ind. Hyg. Assoc. J. 19:171-189 (1958).

32. ACGIH (American Conference of Governmental Industrial Hygienists) (1971), Documentation of Threshold Limit Values for Substances in Workroom Air--Ethyl-Mercaptan. Cinicnnati, Ohio, p. 107.

33. Pharmaceutical Journal 185:361 (1960)

34. Toxicol. Appl. Pharmacol. 22:286 (1972).

35. Clinical Toxicology of Commercial Products. Acute Poisoning. Gleason, M. N., et al. (1969) 3rd ed., p. 65.

36. Mallipute et al. J. Agric. Food Chem. 27:463-466 (1979).

37. Fukuto et al. Quarterly Progress Reports to EPA, August 1978--Nov., 1979. EPA Grant No. R804345-04.

38. Dawaon, English, Petty, 1980, "Physical Chemical Properties of Hazardous Waste Constituents."

39. CAG List of Carcinogens, April 24, 1980.

LISTING BACKGROUND DOCUMENT

TOXAPHENE PRODUCTION

Wastewater Treatment Sludge from the Production of Toxaphene (T)

Untreated Process Wastewater from the Production of Toxaphene (T)

I. Summary of Basis for Listing

The production of toxaphene, a chlorinated hydrocarbon pesticide, results in the generation of process wastewater containing heavily diluted concentrations of toxaphene, and wastewater treatment sludges that contain approximately one percent of toxaphene by weight.

The Administrator has determined that process wastewater and wastewater treatment sludge from toxaphene production may pose a substantial present or potential hazard to human health or the environment when improperly transported, treated, stored, disposed of or otherwise managed, and therefore should be subject to appropriate management requirements under Subtitle C of RCRA. This conclusion is based on the following considerations:

1) Toxaphene is present in each of these waste streams; in the case of the wastewater treatment sludge, if it is found in very high concentrations. Toxaphene has been reported to cause cancer in laboratory animals and is extremely toxic. Toxaphene has also been recognized by the Agency as exhibiting substantial evidence of being carcinogenic. It is also a potent teratogen and has been shown to be mutagenic.

2) Approximately 7 tons of wastewater treatment sludge containing about 140 lbs. of toxaphene are generated per production day. About 19,000 tons of sludge are already disposed of in a landfill in Georgia. (5)

3) Disposal or treatment of these wastes in improperly designed or operated landfills or unlined lagoons could result in substantial hazard if toxaphene migrates via groundwater or surface water exposure pathways.

4) Toxaphene is highly persistent in the environment and bioaccumulates greatly in environmental receptors.

II. Sources of the Waste and Typical Disposal Practices

A. Profile of the Industry

Toxaphene is produced in this country by two manufacturers: Hercules, Inc. at its Brunswick, Georgia plant, and Vertac Chemical Company at its Vicksburg, Mississippi plant.(1) _____

_____

_____

_____

_____.(2,3)

Toxaphene is a complex mixture of polychlorinated camphenes containing 67 to 69 percent chlorine and has the approximate composition of $C_{10}H_{10}Cl_8$. It has been used exclusively as a non-systemic and persistent contact and ingestion insecticide. Toxaphene is marketed as a 90 percent toxaphene-10 percent solvent solution using mixed or modified xylene as the solvent. This solution is then formulated by various companies into emulsifiable concentrates, either alone or with other insecticides. Little or no toxaphene is currently being used in dust, wettable powder, or granule formulations.

*All underlined data are obtained from proprietary reports and data.

B. Manufacturing Process

Toxaphene is produced in essentially the same manner by both domestic manufacturers. The reaction chemistry is as follows:[19]

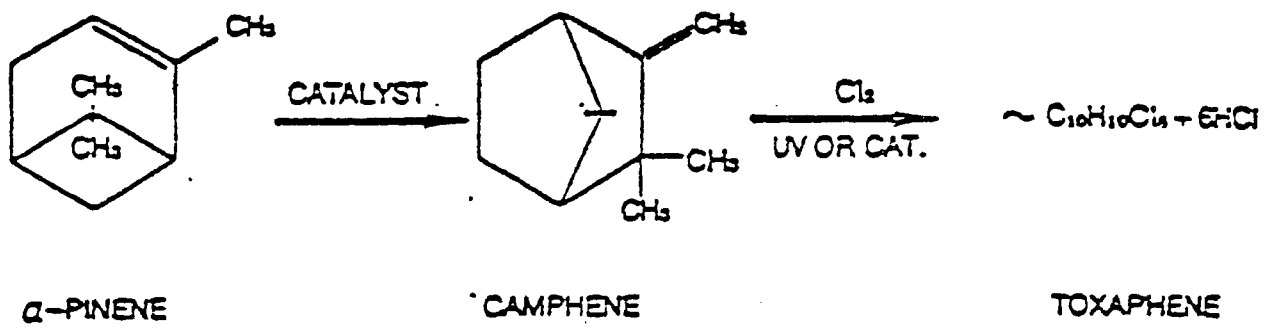

C. Waste Generation and Management*

At the Hercules plant, wastewater is generated from the toxaphene production process (leaks, spills and washdowns), as well as from the scrubbing of vent gases in the HCl absorption and recovery step (see Figure 1).

(2)

(3)

(2) The treated wastewater is directly discharged to a navigable waterway.

In Hercules' toxaphene wastewater treatment system, an average of 7 tons/day of wastewater treatment sludge (settled solids) is generated.[4,5]* The sludge results from the addition of diatomaceous earths

*Variations in wastewater treatment systems or in wastewater sources at the two plants may result in different concentrations of toxaphene in the wastewater treatment sludges.

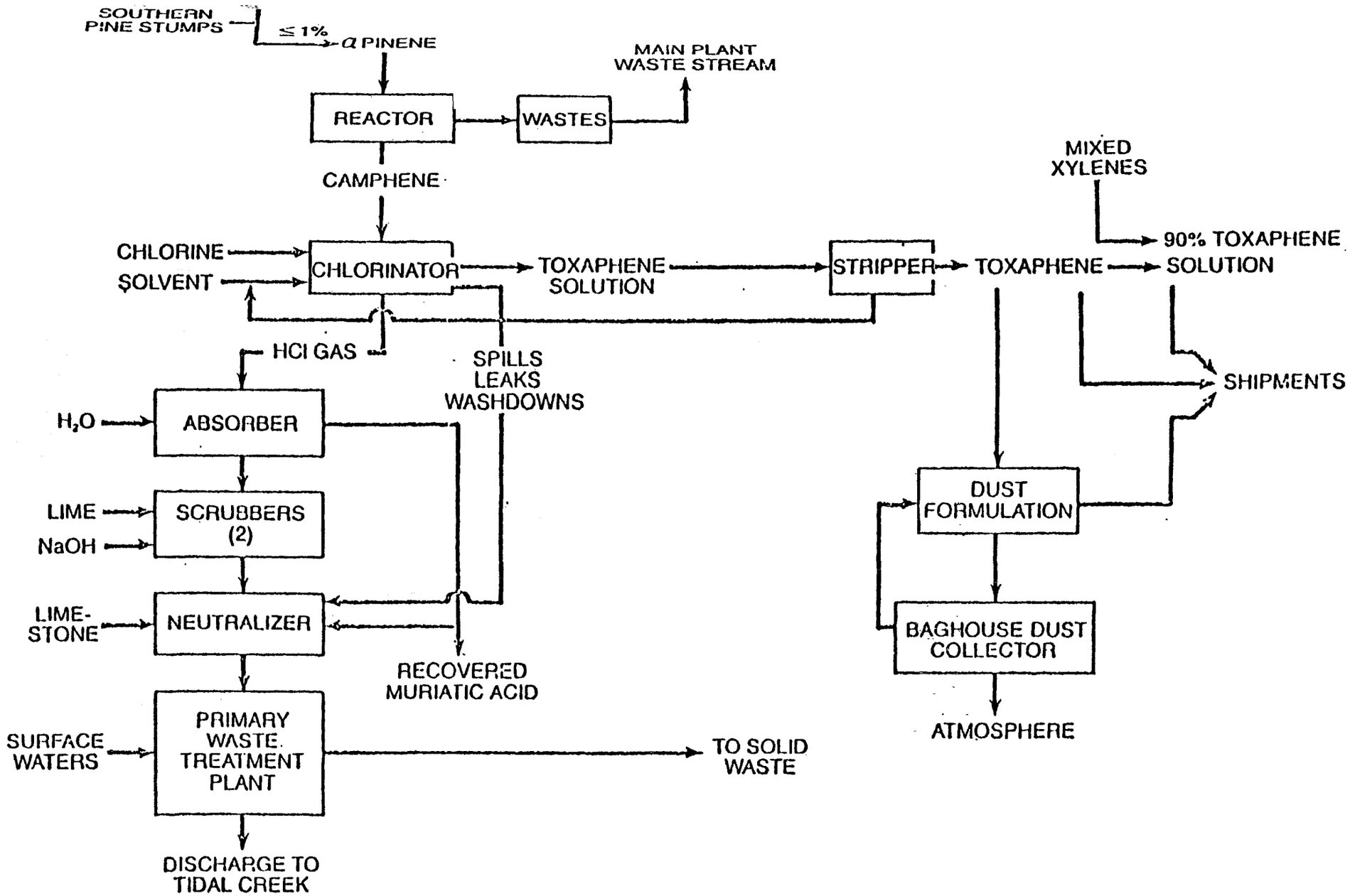

Figure 1. HERCULES' PRODUCTION AND WASTE SCHEMATIC FOR TOXAPHENE[4]

and lime to the wastewater as sorption agents for the removal of toxaphene from the wastewater.[5] The solids are allowed to settle in holding ponds and may remain there for months at a time.[13] After the basin is filled with solids it is taken off line and the sludge is allowed to dry to approximately 50% solids.[5] Analyses of the sludge performed by Hercules indicate that the sludge contains approximately one percent toxaphene by weight, or 10,000 mg toxaphene/kg of sludge.[5] Some 140 lb/day of toxaphene are generated and will be contained in this waste stream.[4,5]

The ultimate destination of the toxaphene wastewater treatment sludge generated at the Hercules plant is a state-approved landfill.[6] The landfill is known as the "009" landfill and is a privately owned site operating under Georgia permit. It is used exclusively for the disposal of the toxaphene wastewater treatment sludge generated at the Hercules Plant.[6] The "009" landfill used for disposal of the Hercules toxaphene wastewater treatment sludge has a bentonite clay liner, and has 6 monitoring wells which are monitored 4 times per year. To date, no toxaphene has been detected in the wells.[6]

(3).

(5)

(3,5)

(3)

.* This pond, or lagoon, is unlined.[14] The treated wastewater is discharged to the Mississippi River.

III. Discussion of Basis for Listing

A. Hazards Posed by the Waste

As noted above, in the Hercules toxaphene wastewater treatment system, an average of 7 tons/day of waste sludge are generated.[4,5] The toxaphene content in the waste sludge is approximately at one percent by weight or 10,000 mg/Kg sludge. High concentrations of toxaphene are undoubtedly present in process wastewater to account for such high concentrations in the sludge.

Toxaphene is an exceptionally dangerous waste consitutent. It is extremely toxic, highly bioaccumulative, and has been reported to cause cancer in laboratory animals. It is also a potent teratogen and has been shown to be mutagenic. Toxaphene is regulated as a toxic pollutant under §307(a) of the Clean Water Act. After an adjudiciative

*No data is currently available on the amount of wastewater treatment sludges (settled solids) generated at the Vertac plant. Nor is any data available on the concentrations of toxaphene in these sludges.

proceeding, a discharge concentration limitation of 1.5 ppb has been established for toxaphene discharges into navigable waters, and this discharge limitation was judicially upheld in Hercules, Inc. v. EPA, 598 F. 2d 91 (D.C. Cir 1978). (The administrative and judicial records are incorporated by reference into this listing background document.) The Agency has also established a national interim primary drinking water standard of .005 mg/l for toxaphene. (That administrative record is likewise incorporated by reference.)

The wastes are listed as toxic based on the potential for waste mismanagement and resulting environmental harm. Toxaphene is both mobile and persistent, having frequently been found in clarified and treated municipal drinking water.(18) Existing waste management methods could lead to release of waste toxaphene. Wastewaters are presently treated in holding ponds. Waste treatment sludge, if generated, is now disposed in landfills and unlined lagoons. Disposal in landfills represents a potential hazard if the landfill is improperly designed or operated. This can result in leaching of hazardous compounds and subsequent contamination of ground water. Disposal in unlined lagoons also represents a potential hazard since the wastes may leach directly into the ground, resulting in possible groundwater contamination. Care must be taken to ensure that the lagoons and landfills used for storage or disposal of the toxaphene product wastes are properly designed and operated (e.g., lined with an appropriate thickness of impervious materials or provided with leachate collection/ treatment systems) to prevent contamination of groundwater or surface water.

Prior to disposal in the "009" landfill, the Hercules plant treats these wastes in holding ponds which, if not properly designed and operated, may result in groundwater or surface water contamination. The high water table and the sandy composition of the soil at the location of the Hercules plant in Brunswick, Ga., make careful managment of these wastes particularly important. (13)*

Wastewater treatment sludge could also create a hazard if improperly managed. Although the sludges appear to be managed properly at the present time (suggesting that industry regards these wastes as hazardous), proper management of an otherwise hazardous waste does not make the waste non-hazardous.

One final reason for regulatory concern is noteworthy. Since toxaphene bioaccumulates in environmental receptors by factors of as much as 300,000[7], if only a small amount leaches into the environment, a serious health hazard would be created. In the soil, toxaphene may persist from several months to more than 10 years (soil half-life is 11 years, Appendix B). It has also been shown to persist for up to 9 years in lakes and ponds.[7] Thus, the potential for human exposure is considerable. The potential for substantial hazard is, therefore, very high.

The need for the most careful management of toxaphene-containing substances is thus well-establilshed. In light of the documented health and environmental hazards associated with toxaphene, and the fact that substantial hazard is caused by ingestion of extremely small (ppb) toxaphene concentrations, the Agency believes it is justified in listing this waste.

*It should be noted that Hercules' past effluent management practices have not always been adequate, as Hercules has conceded that its past effluent discharge "'had an adverse effect upon the ecology' of local waters." (18)

B. Health and Ecological Effects

1. Toxaphene

Health Effects - Toxaphene is extremely toxic [oral rat LD_{50} = 40 mg/kg].(8) Death in humans from ingestion of this dosage has also been reported. (9) Toxaphene is also lethal to animals by inhalation and skin absorption at dosages of 1 g/kg or less.(10)

This chemical is teratogenic in mice when administered orally at a relatively small dose (350 mg/kg).(11) Toxaphene is carcinogenic in rats and mice, causing a significant increase in the incidence of thyroid and liver cancers when administered in the diet. (12) A significant increase in liver cancer has been reported in mice at dietary levels of 50 ppm.(15)

Toxaphene and its subfractions have been found mutagenic in the standard bacterial assay (*S. typhimuriumm*, strain TA100). (16)

Ecological Effects - Toxaphene is extremely toxic to fish, and toxic to lower aquatic organisms, birds, and wild animals. The LD_{50} (96-hour) of toxaphene in static bioassays is 3.5, 5.1 and 14 ng/l for bluegills, fathead minnows, and goldfish, respectively.(7) Toxaphene is also capable of producing deleterious effects in fish at levels as low as 0.39 ng/l, and bioaccumulates by factors of as much as 300,000.(7)

Regulations - Toxaphene has an OSHA standard for air, TWA = 500 mg/m^3 (Skin, SCP-F). Toxaphene is listed as a priority pollutant in accordance with §307(a) of the Clean Water Act of 1977. A 0.005 mg/l EPA National Interim Primary Drinking Water Standard has been established for toxaphene.

Industrial Recognition of Hazard - Toxaphene has been rated by Sax, Dangerous Properties of Industrial Materials[15] to be highly toxic through ingestion, inhalation, and skin absorption.

Additional information and specific references on adverse effects of toxaphene can be found in Appendix A.

IV. References

1. 1977 Directory of Chemical Producers. Stanford Research Institute. Menlo Park, California.

2. Proprietary information submitted by Hercules, Inc. to the U.S. Environmental Protection Agency in 1978 response to "308" letter.

3. Proprietary information submitted by Vicksburg Chemical Company to the U.S. Environmental Protection Agency in 1978 response to "308" letter.

4. Meiners, A. F., C.E. Mumma, T. L. Ferguson, and G. L. Kelso. Westwater Treatment Technology Documentation for Toxaphene Manufacture. Report prepared by the Midwest Research Institute for the U.S. Environmental Protection Agency. EPA-400/9-76-013. February 1976.

5. Telephone communication to: Ms. Jennifer Kaduck, State of Georgia, Land Protection Division, Department of Natural Resources, Atlanta, Georgia (404-656-2833), February 28, 1980 (Edward Monnig, TRW).

6. Telephone communication to: Ms. Jennifer Kaduck, State of Georgia, Land Protection Branch, Environmental Protection Division, Department of Natural REsources, Atlanta, Georgia, 12 February 1980. (S. Quinlivan, TRW).

7. Criteria Document for Toxaphene. U.S. Environmental Protection Agency. EPS-440/9-76-0k14. June 1976.

8. Special Publication of Entomoligcal Society of America. College Park, MD, Vol. 74:1 (1974).

9. Clinical Memorandum on Economic Poisons. U.S. Dept. HEW, PHS. COC, Atlanta, GA. p.1, 1956.

10. Council on Pharmacy and Chemistry. Pharmacologic Properties of Toxaphene, a chlorinated Hydrocarbon insecticide. JAMA 149:1135-1137, July 19, 1952.

11. Chernaff, N. and Carber, B.D. Fetal toxicity of toxaphene in rats and mice. Bull. Environ. Contam. Toxicol. 15:660-664, June, 1976.

12. National Cancer Institute. (1977) Guidelines for Carcinogensis Bioassays in Small Rodents. Tec. Rep. No. 1 Publ. No. 017-042-00118-8. U.S. Govn. Print. Office, Washington, D.C.

IV. References (Continued)

13. Telephone Communications to: Ms. Jennifer Kadinck, et al., State of Georgia, Land Protection Division, Department of Natural Resources, Atlanta, Georgia, 8 April 1980. (Robert Karmen, EPA)

14. Telephone Communication: John King (EPA) to Edward Monmig (TRW), 8 April 1980.

15. Litton Bionetics, Inc. Carcinogenic evaluation in mice. Toxaphene Final Report. LBI Project No. 20602. Kensington, MD. Submitted to Hercules, Inc., Wilmington, Del., Nov. 1978.

16. Hill, R.N. (1977) Mutagenicity Testing of Toxaphene Memo dated Dec. 15, 1977, to Fred Hageman. Off. Spec. Pestic. Rev. U.S. Environmental Protection Agency, Washington, D.C.

17. Sax, N. Irving, 1975. Dangerous Properties of Industrial Materials. Fourth Edition, Van Nostrand Reinhold, New York.

18. Hercules, Inc. v. EPA, 598 F. 2d 91, 99 (D.C. Cir. 1978).

19. Lawless, E.W. Pesticide Study Series -5- "The Pollution Potential in Pesticide Manufacturing," Technical Studies Report; TS-00-72-04. Washington, U.S. GPO, 1972.

LISTING BACKGROUND DOCUMENT

2,4,5-T PRODUCTION

- Heavy Ends or Distillation Residues from the Distillation of Tetrachlorobenzene in the Production of 2,4,5-T(T)

I. Summary of Basis for Listing

The hazardous waste from 2,4,5-Trichlorophenoxyacetic acid (2,4,5-T) production consists of the heavy ends or distillation residues from the distillation of tetrachlorobenzene in the first step of 2,4,5-T manufacture.

The Administrator has determined that the tetrachlorobenzene distillation heavy ends in 2,4,5-T production may pose a substantial present or potential hazard to human health or the environment when improperly transported, treated, stored, disposed of or otherwise managed, and therefore should be subject to appropriate management requirements under Subtitle C of RCRA. This conclusion is based on the following considerations:

1. The heavy ends from distillation of tetrachlorobenzene contain several chlorinated benzenes including hexachlorobenzene and ortho-dichlorobenzene.

2. Hexachlorobenzene is a reported carcinogen. Ortho-dichlorobenzene is chronically toxic.

3. Disposal of these wastes in improperly designed or operated landfills could create a substantial hazard due to the migratory potential and environmental persistence of these hazardous compounds. Both groundwater and surface water are exposure pathways of concern.

4. Volatilization of the waste constituents from landfills, as has been documented, could result in the release of hazardous vapors to the atmosphere and present a significant opportunity for exposure of humans, wildlife, and vegetation in the vicinity of these operations to potentially harmful substances.

II. Sources of the Waste and Typical Disposal Practices

A. Profile of the Industry

_____

_____

_____

_____

_____

_____ *(1,5,6)†

The 2,4,5-trichlorophenol (TCP) salts and esters, including 2,4,5-T, are selective herbicides used to control woody plants, especially on range land and rights-of-way, where 2,4-D is not effective. The properties and actions of these compounds are similar to 2,4-D formulations. These compounds are used extensively in forest conifer control and for weed control, and for rice crops.(8)

B. Manufacturing Process

Figure 1 is the process flow diagram of the manufacture of 2,4,5-T (2,4,5-trichlorophenoxyacetic Acid).(7) The first step in 2,4,5-T manufacture is the reaction of chlorobenzene with chlorine to form tetrachlorobenzene (TCB). Distillation is then used to separate the TCB from other chlorobenzenes. The waste of concern is generated at this point in the process, and consists of the distillation residues. Following this, the distilled TCB is hydrolyzed to form TCP and then esterified to form 2,4,5-T.(7)

---

*The underlined data are those obtained from proprietary reports and data files.

†Some of the companies listed above may no longer produce 2,4,5-T

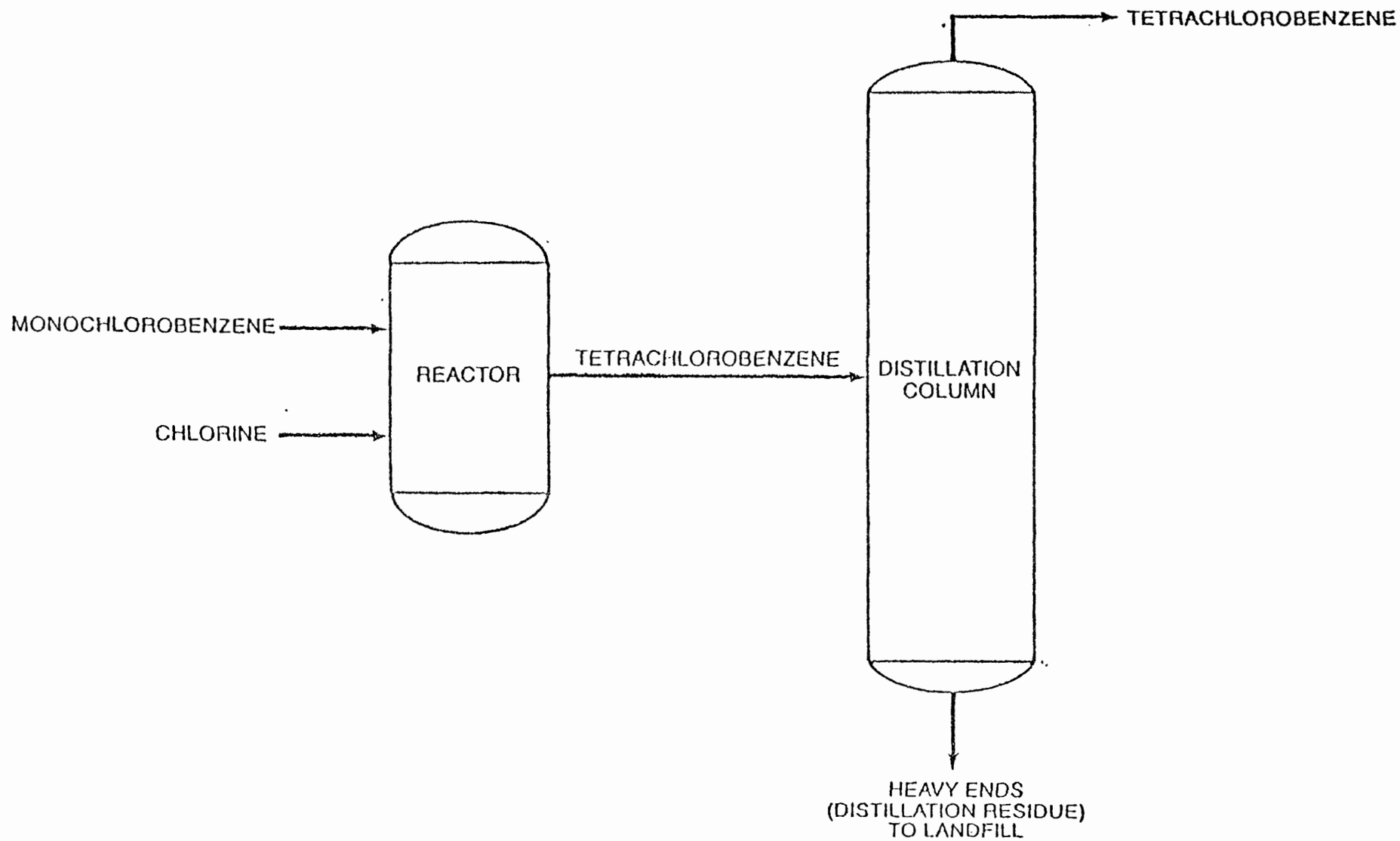

Figure 1. GENERATION OF HEAVY ENDS (DISTILLATION BOTTOMS) FROM TETRACHLOROBENZENE MANUFACTURE IN THE 2, 4, 5-T PROCESS (7)

C. Waste Generation and Management

The heavy ends or distillation residues generated in separating TCB from other chlorobenzene make up the hazardous waste stream of concern. These residues are likely to contain all of the benzene chlorination by-products including those higher than chlorobenzene, such as ortho-dichlorobenzene and hexachlorobenzene. Further, since the waste consists largely of heavy chlorinated organic by-products, concentrations of these constituents will probably be high.

Based on current industry practice involving similar wastes, the distillation residues are probably managed by landfilling. Disposal may involve surface placement, uncontained burial, or burial in barrels in a landfill.

III. Discussion of Basis for Listing

A. Hazards Posed by the Waste

The heavy ends discussed above contain hazardous compounds which can be expected to pose a serious threat to the environment if improperly managed or disposed. Among the compounds expected to be present are hexachlorobenzene and ortho-dichlorobenzene.

Hexachlorobenzene is believed to be carcinogenic and teratogenic, while o-dichlorobenzene may pose a chronic toxicity hazard via a water exposure pathway.* To warrant a decision not to list this waste, therefore, the Administrator would require assurance that the waste constituents are incapable of migration and mobility even if improperly managed, and that these constituents will not persist if they are released into the environment.

* It is projected that o-dichlorobenzene could create a chronic toxicity hazard if it migrated at several orders of magnitude less than its solubility limit in water.(38)

Indications are that these waste constituents are capable of migration, mobility and persistence to cause substantial hazards. The groundwater exposure pathway is of principal concern. Hexachlorobenzene, while relatively insoluble, has been detected to have migrated via a groundwater pathway from Hooker Chemical Corporation's S area, Hyde Park, and 102d St. landfills in Niagra, New York.(37) Orthodichlorobenzene is relatively soluble (App. B), and thus may be available for environmental release.

Present waste disposal practices may be inadequate to prevent waste migration. Certainly, improper management may result in release of harmful constituents. Thus, uncontained landfill burial would not impede leachate migration in areas with relatively or highly permeable soils, or where the water table is so high that groundwater acts as a leaching medium.* Containerization in landfilled drums could still result in contaminant release, since all drums have a limited life span as the exterior metal corrodes in the presence of even small amounts of moisture. When this occurs, the potential for groundwater contamination is high if the landfill is not properly designed and operated. Improper disposal techniques in surface containment sites may also present the possibility of surface runoff contamination. A break in a pond dike or rainwater flowing over an improperly covered landfill containing the process wastes may allow migration to surface soils and surface water.

---

*Laboratory studies of the behavior of chlorinated benzenes in soil that is high in sand and low in organic content indicate that hexachlorobenzene would be likely to exhibit slow but measureable mobility in these soils again indicating that soil attenuation will not prevent environmental release of migrating contaminants.(3)

Hexachlorobenzene may also pose a substantial hazard via an air inhalation pathway if landfills are not adequately convered, as shown by a number of actual damage incidents. In May, 1976, hexachlorobenzene-containing wastes from a Vulcan plant in Louisiana volatilized and resulted in the death of cattle grazing in contaminated areas.(39) A similar case history of environmental damage in which air, soil, and vegetation over an area of 100 square miles were contaminated by hexachlorobenzene (HCB) occurred in 1972.(39) There was volatilization of HCB from landfilled wastes and subsequent bioaccumulation in cattle grazing in the eventually contaminated areas. Accumulation in tissues of cattle occurred, so the potential risk to humans from eating contaminated meat and other foodstuffs is significant.

The waste constituents of concern also can be expected to persist should they migrate from the matrix of the waste. Hexachlorobenzene is very persistent.* (App. B) O-dichlorobenzzene is subject to certain degredative processes, but would be likely to persist in groundwater. (App. B.) Hexachlorobenzene, in addition to being persistent, is very bioaccumulative, increasing its likelihood to cause harm should it migrate. (App. B)

B. Health and Ecological Effects

1. Hexachlorobenzene

Health Effects - Hexachlorobenzene has been shown to be carcinogenic in animals(19,20) and has been identified by the Agency to be carcinogenic. This chemical is reportedly teratogenic, known

---

*Evidence of mobility and resistance to degradation has been shown by identification of chlorobenzene isomers in ground water in Florida.(1 Chlorinated benzenes are likely to persist in the environment and to bioaccumulate.(17)

to pass through placental barriers, producing toxic and lethal effects in the fetus.(21) Chronic exposure to HCB in rats has been shown to result in damage to the liver and spleen.(22) It has been lethal in humans when ingested at one-twentieth the known oral LD_{50} dose for rats.(23) It has also been demonstrated that at doses far below those which are lethal, HCB enhances the body's capability to toxify rather than detoxify other foreign organic compounds present in the body through its metabolism.(24) Additional information and specific references on the adverse effects of hexachlorobenzene can be found in Appendix A.

Ecological Effects - Hexachlorobenzene is likely to contaminate accumulated bottom sediments within surface water systems and bioaccumulate in fish and other aquatic organisms.(18)

Regulatory Recognition of Hazard - Hexachlorobenzene is a chemical evaluated by CAG as having substantial evidence of carcinogenicity. Ocean dumping of hexachlorobenzene is prohibited. An interim food contamination tolerance of 0.5 ppm has been established by FDA.

Industrial Recognition of Hazard - According to Sax, Dangerous Properties of Industrial Chemicals, HCB is a fire hazard and, when heated, emits toxic fumes.

2. Ortho-dichlorobenzene

Health Effects - Ortho-dichlorobenzene is very toxic in rats [oral LD_{50} = 500 mg/Kg].(25) Human death has also occurred at this level.(26) Chronic occupational exposure to this chemical and its isomer has resulted in toxicity to the liver, central nervous system and respiratory system.(27) Chronic oral feeding of ortho-dichloro-

benzene to rats in small doses has caused anemia as well as liver damage and central nervous system depression.[28] Additional information and specific references on the adverse effects of ortho-dichlorobenzene can be found in Appendix A.

Regulatory Recognition of Hazard - Ortho-dichlorobenzene has been designated as a priority pollutant under Section 307(a) of the CWA. The OSHA standard for O-dichlorobenzene is 50 ppm for an 8 hour TWA. It has been selected by NCI for Carcinogenesis Bioassay, September, 1978.

The Office of Water and Waste Management has completed pre-regulatory assessment of O-dichlorobenzene under the Clean Water Act and the Safe Drinking Water Act. Under section 311 of the Clean Water Act, regulation has been proposed. The Office of Research and Development has begun pre-regulatory assessment of O-dichlorobenzene under the Clean Air Act.

Industrial Recognition of Hazard - Sax, Dangerous Properties of Industrial Materials, lists the toxic hazard ratings for O-dichlorobenzene as moderate via inhalation and oral routes.

IV. References

1. Proprietary information submitted to EPA by Thompson-Hayward Chemical Co., Kansas city, Kansas in 1978 Response to "308" Letter.
2. U.S. Department of Health, Education and Welfare, National Institute for Occupational Safety and Health, Registry of Toxic Effects of Chemical Substances, Cincinnati, Ohio, January 1979 in Radian Corporation Hazardous Waste Background Document, 1979.
3. U.S. Department of Health, Education and Welfare, National Institute for Occupational Safety and Health, Suspected Carcinogens, A Subfile of the NIOSH Toxic Substances List, Rockville, Maryland, June 1975 in Radian Corporation Hazardous Waste Background Document, 1979.
4. Identification of Organic Compounds in Effluents from Industrial Sources, PB-241641, Versar, Inc., Springfield, VA, April 1975 in Hazardous Waste Background Document, 1979.
5. Proprietary Information submitted to EPA by Dow Chemical Corporation, Midland, Michigan in 1978 response to "308" Letter.
6. Proprietary Information submitted to EPA by Transvaal, Inc. (Vertac), Jacksonville, Arkansas in 1978 response to "308" Letter.
7. Gilbert, E. E. et al; U.S. Patent 2,830,083. April 8, 1958; Assigned to Allied Chemical Corporation. In M. Sittig, Pesticides Process Encyclopedia, Noyes Data Corporation, Park Ridge, New Jersey, 1977.
8. Farm Chemicals Handbook, 1977, Meister Publishing Company, Willoughby, Ohio.

9. Midwest Research Institute, The Pollution Potential in Pesticide Manufacturing, Washington, D.C., EPA, June 1972, in Pesticide Process Encyclopedia, Noyes Data Corporation, Park Ridge, New Jersey, 1977.

10. Assessment of Dioxin-Forming Chemical Processes. Walk, Haydel and Associates, 600 Carondolet, New Orleans, LA, for USEPA/IERL-Cincinnati, EPA Contract No. 68-03-2579, 179 pp., undated.

11. Dow Chemical Company. The Trace Chemistries of File - A Source of and Routes for the Entry of Chlorinated Dioxins into the Environment. The Chlorinated Dioxin Task Force, the Michigan Division, Dow Chemical, USA, November 15, 1978.

12. Stehl, R. H. and L. L. Lamparski. Combustion of Several 2,4,5-T Compounds: Formation of 2,3,7,8-Tetrachlorodibenzo-p-dioxin. Science, 197:1008-1009, September 1, 1977.

13. Rappe, C., S. Marklund, H. R. Buser, and H. P. Bosshart. Formation of Polychlorinated Dibenzo-p-dioxins (PCDDs) and Dibenzofurans (PCDEs) by Burning or Heating Chlorophenates. Chemosphere, 7(3):269 281, 1978.

14. Crosby, D. G., land A. S. Wong, 1977. Environmental Degradation of 2,3,7,8-Tetrachlorodibenzo-p-dioxin. Science, 195:1337.

15. Crosby, D. B. et al, 1971. Photodecomposition of Chlorinated Dibenzo-p-dioxin. Science, 173:748.

16. International Agency for Research on Cancer. IARC Monographs on the Evaluation of Carcinogenic Risk of Chemicals to Man. Some Fumigants, the Herbicides 2,4-D and 2,4,5-T, Chlorinated Dibenzodioxins, and Miscellaneous Industrial Chemicals. World Health Organization, Lyon, France. Volume 15, August 1977.

17. IARC Monographs on the Evaluation of Carcinogenic Risk of Chemicals to Man (International Agency for Research on Cencer, Lyon, France, World Health Organization.

18. Technical Support Document for Aquatic Fate and Transport Estimates for Hazardous Chemical Exposure Assessments. 1980. U.S. EPA, Environmental Research Lab., Athens, GA.

19. Cabral, J. R. P. et al. Carcinogenic activity of Hexachlorobenzene in hamsters. Tox. Appl. Pharmacol. 41:155 (1977).

20. Cabral, J. R. P. et al. 1978. Carcinogenesis study in mice with hexachlorobenzene. Toxicol. Appl. Pharmacol. 45:323.

21. Grant, D. L. et al. 1977. Effect of hexachlorobenzene on reproduction in the rat. Arch. Environ. contam. Toxicol. 5:207.

22. Koss, G. et al. 1978. Studies on the toxicology of hexachlorobenzene. III. Observations in a long-term experiment. Arch. Toxicol. 40:285.

23. Clinical Toxicol. of Commercial Products - Acute Poisoning. Gleason, M. N. et al (1969) 3rd Ed., p. 76.

24. Carlson, G. P., 1978. Induction of cytochrome P-450 by halogenated benzenes. Biochem. Pharmacol. 27:361.

25. Clinical Toxicology of Commercial Products. Gleason, M. N. et al. (1969), 3rd Ed., p. 49.

26. U.S. EPA (1979). Dichlorobenzenes: Ambient Water Quality Criteria.

27. Varshavsakaya, S. P. Comparative toxicological characteristics of chlorobenzene and dichlorobenzene (ortho- and para-isomers) in relation to the sanitory protection of water bodies. Gig. Sanit. 33:17 (1967).

28. Ben-Dyke, R., Sanderson, D. M. and Noakes, D. N. Acute toxicity for pesticides. World Rev. Pest Control 9:119-127 (1970).

29. NCI Carcinogenesis Bioassay, National Technical Information Service, Rpt. PB223-159, Sept. 1978.

30. Clinical Toxicology of Commercial Products. Gleason et al, 3rd Ed., Baltimore, Williams and Wilkins, 1969.

31. Fahrig, R. et al. Genetic activity of chlorophenols land chlorophenol impurities, pp. 325-338. In Pentachlorophenol: Chemistry, Pharmacology and Environmental Technology. K. Rango Rao, Plenum Press, New York.

32. Weinback, E. C. and Garbus, J. The interaction of uncoupling phenols with mitochondria and with mitochondrial protein. Jour. Biol. Chem. 210:1811 (1965).

33. Mitsuda, H., et al. Effect of chlorophenol analogues on the oxidative phorphorylation in rat liver mitochondria. Agric. Biol. Chem. 27:366 (1963).

34. U.S. EPA, 1972. The effect of chlorination on selected organic chemicals. Water Pollut. Control Res. Agr. 12020.

35. U.S. EPA, 1978. In-depth studies on health and environmental impacts on selected water pollutants. Contract No. 68-01-4646.

36. Wilson, J. T., and C. F. Enfield, 1979. Transport of Organic Pollutants Through Unsaturated Soil. Presented at American Geophysical Union Fall Meeting, December 3-7, San Francisco, California.

37. Complaint in Civil Action No.

38. Dawson, English, and Petty, 1980 "Physical Chemical Properties of Hazardous Waste Constituents."

39. OSW - Hazardous Waste Management Division - "Hazardous Waste Incidents", Unpublished Open Fle Data, 1978.

40. The Carcinogen Assessment Group's List of Carcinogens, April 22, 1980.

LISTING BACKGROUND DOCUMENT

2,4-D PRODUCTION

2,6-Dichlorophenol waste from the Production of 2,4-D (T)

Untreated Wastewater from the Production of 2,4-D (T)

I. Summary of Basis for Listing

These wastes from 2,4-D production may contain a number of toxic constituents, including 2,4-dichlorophenol, 2,6-dichlorophenol, 2,4,6-trichlorophenol and chlorophenol polymers.

The Administrator has determined that the subject solid wastes from 2,4-D production may pose a substantial present or potential hazard to human health or the environment when improperly transported, treated, stored, disposed of or otherwise managed, and therefore should be subject to appropriate management requirements under Subtitle C of RCRA. This conclusion is based on the following considerations:

1. The wastewater generated from the production of 2,4-D contains 2,4-dichlorophenol, and 2,4,6-trichlorophenol. 2,6-Dichlorophenol waste contains substantial concentrations of 2,6-dichlorophenol, 2,4,6-trichlorophenol and 2,4-dichlorophenol.

2. 2,4,6-Trichlorophenol has been identified by EPA's Carcinogen Assessment Group as a substance which has exhibited susbtantial evidence of carcinogenicity. It has also been sited in literature as being mutagenic. 2,4-Dichlorophenol is a reported animal carcinogen and 2,6-dichlorophenol is toxic.

3. Management of these wastes in treatment lagoons or landfills creates the potential for soil or groundwater contamination via leaching if mismanagement occurs.

II. Sources of Wastes and Typical Disposal Practices

A. Profile of the Industry

2,4-D is a selective herbicide registered for use on grasses, barley, corn, oats, sorghum, wheat and non-crop areas for post-emergent control of weeds.[7] _____

_____

_____

1. _____

2. _____

_____

3. _____

_____

B. Manufacturing Process

In the 2,4-D manufacturing process, benzene is chlorinated to produce monochlorobenzene, which is hydrated to produce phenol.[2a] Chlorination of phenol also leads to the generation of by-product 2,6-dichlorophenol and other chlorophenols (principally 2,4,6-trichlorophenol).[2a] Figure 1 illustrates an example of this manufacturing process.

C. Waste Generation

1. Generation of 2,6-dichlorophenol waste.

Chlorination of phenol inevitably leads to the generation of by-product 2,6-dichlorophenol and other chlorophenols.[2a]

_____

_____

_____

_____[8,10] As shown in

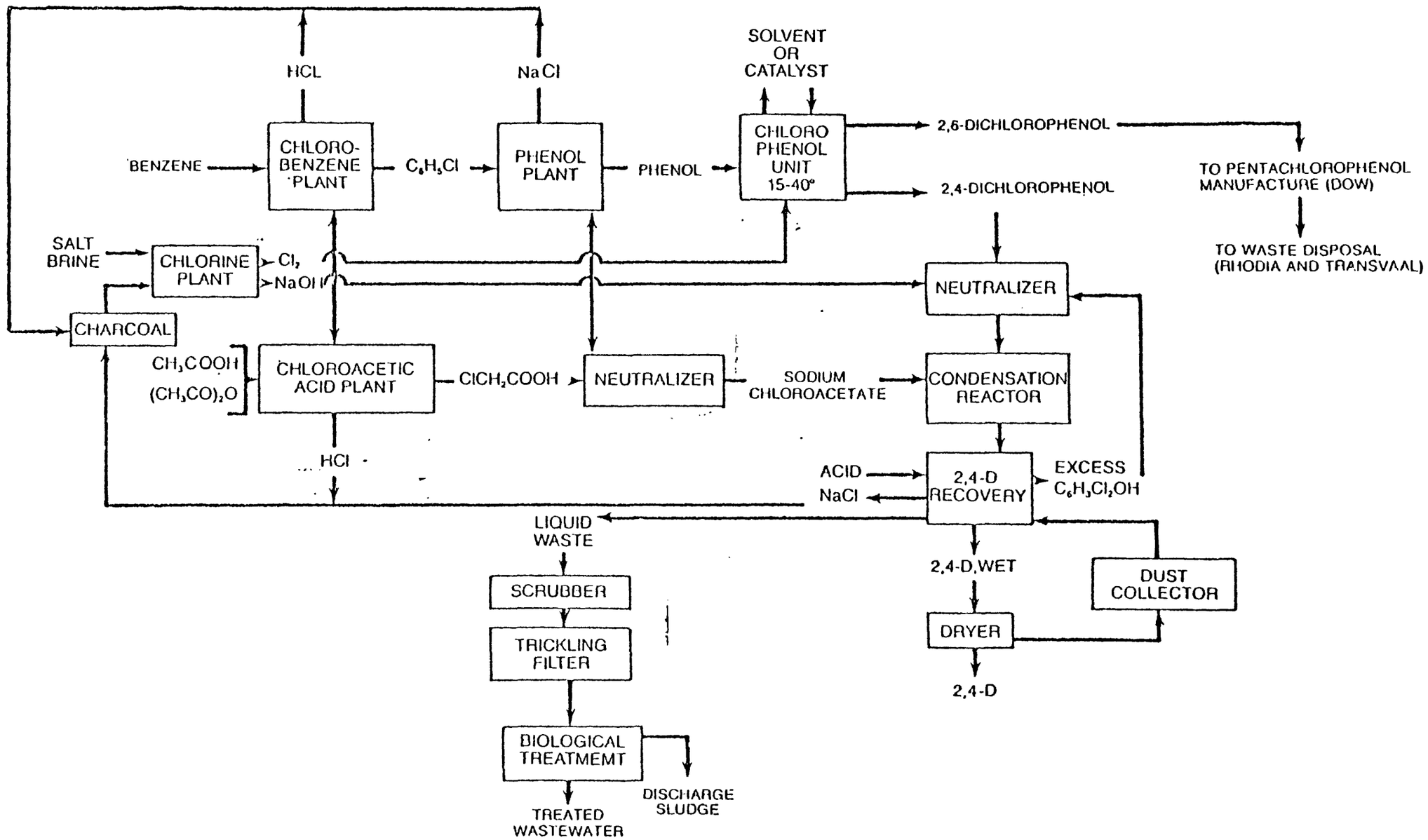

Figure 1. PRODUCTION AND WASTE SCHEMATIC FOR 2,4-D (MODIFIED FROM REFERENCE 1)

Figure 1, 2,6-dichlorophenol is taken off overhead from the chlorophenol unit as a by-product. This 2,6-dichlorophenol by-product is used in the production of pentachlorophenols in one plant, and therefore is not a waste; in two other 2,4-D plants, the 2,6-dichlorophenol by-product is disposed of as a waste,* and is included in this listing. This waste is composed of 2,6-dichlorophenol, 2,4,6-trichlorophenol, 2,4-dichlorophenol, and chlorophenol polymers (see page 5).(8,10)

Various 2,6-Dichlorophenol generation rates have been reported.

(10)

(8)

2. Generation of wastewater.

*The Transvaal (Vertac) plant does not reuse 2,6-dichlorophenol as feekstock material, so it is quite likely that this plant generates 2,6-dichlorophenol waste.

(8) Process wastewater is removed for treatment. This wastewater, prior to treatment, is listed as hazardous. 2,4-Dichlorophenol is the intermediate used in the production of 2,4-D; some of this chemical becomes entrained in the wastewater. It is expected that some quantities of 2,6-dichlorophenol are also carried forward (see Fig. 1).

D. Waste Management

(10)

Wastewater from Dow Chemical's 2,4-D unit is first chemically treated, then passed through a trickling filter on the way to a central biological waste treatment plant.[2a] Biological treatment sludges from the production of 2,4-D at the Dow plant are limestone treated and disposed in an on-site landfill. At the Transvaal, Inc. (Vertac) plant, wastewater goes to a neutralization ditch.

(9)

III. Discussion of Basis for Listing

A. Hazards Posed by the Waste

(8,10)

(3,11):

(The waste constituents of concern are 2,4,6 trichlorophenol and 2,4 dichlorophenol.)* . Disposal in landfills, even if plastic lined drums are used, could create a potential hazard if the landfill is improperly designed or operated (i.e., drums corrode in the presence of even small amounts of water). This can result in leaching of hazardous compounds with resultant contamination of surface and ground waters.

A similar potential hazard exists when wastewaters from 2,4-D production are impounded in treatment lagoons. The

*Other waste constituents are not deemed present in sufficient concentrations to be regulatory significance.

same hazardous constituents are present in the solids that will settle to the bottom of the lagoon. The concentrations of the hazardous constituents in the settled solids are expected to be much higher than those found in the wastewater itself, which obviously contains a much greater volume of water*. Hazardous constituents may leach from the lagoon bottom to contaminate groundwater. In addition, possible incomplete treatment in biological treatment lagoons may allow these hazardous constituents to reach the ultimate disposal site, where the potential for leachate exposure exists.

An example of the consequences which may result when these wastes are mismanaged occured at the Transvaal, Inc. plant, which produces 2,4-D, in Jacksonville, Arkansas. Sludge from 2,4-D manufacture is sent to a chemical landfill adjacent to the plant. Soil and groundwater near the chemical landfill have been found to be contaminated with toxic chlorophenols from 2,4-D manufacture.**

As this incident illustrates, waste constituents may well prove mobile and persistent. As to mobility, the chlorinated phenols present in the waste may undergo bio-degradation in

---

*This indicates that the dredged sludges from lagoons are not expressly listed here. These sludges are nevertheless reached by this listing; Section 261.3 of the Regulations provide that the solid wastes discharged from a hazardous waste treatment facility are not also considered hazardous unless the generator demonstrates otherwise.

**OSW Hazardous Waste Division, Hazardous Waste incidents, unpublished open file 1978.

soil if present in low concentrations.[25] It seems likely, however, the rates of degradation of these compounds in the soil profile would be low because of repression of soil microbial activity by these and other waste components. (Also, mismanagement could occur in areas where soil is low in organic content, so mobility in soil would not be substantially effected.) All of these compounds also are quite soluble in water and do not exhibit a high propensity to adsorb in soils.[25] Hence, they would be expected to move readily into groundwater. The potential for movement of these compounds into and through groundwater is illustrated by a case history in California, where long-term pollution of groundwater by phenolic substances occurred because of release into the soil of water containing 2,4-dichlorophenol from 2,4-D manufacture.[26] High waste loads such as landfill dumping would inhibit degradation and therefore increase the likelihood of adverse environmental effects.

B. Health and Ecological Effects

1. 2,4-Dichlorophenol/2,6-dichlorophenol

Health Effects - 2,4-Dichlorophenol is very toxic in rats [oral LD_{50} = 580 mg/kg].[12] This chemical is carcinogenic when applied to the skin of mice in small doses.[13] It is also reported to adversely affect cell metabolism.[14,15] An isomer, 2,6-dichlorophenol, is also toxic in animals.[16] Additional information and specific references on adverse effects of 2,4-dichlorophenol and 2,6-dichlorophenol can be

found in Appendix A.

Ecological Effects - Small doses of 2,4-dichlorophenol have been lethal to fresh water fish and invertebrates.(17)

Regulatory Recognition of Hazard - 2,4-Dichlorophenol is designated as a priority pollutant under Section 307(a) of the CWA. The Office of Water and Waste Management has completed a pre-regulatory assessment and proposed water quality criteria for 2,4-dichlorophenol under sections 304(a) and 311 of the Clean Water Act. The Office of Research and Development is presently conducting a pre-regulatory assessment of 2,4-dichlorophenol under the Clean Water Act.

Industrial Recognition of Hazard - Sax, Dangerous Properties of Industrial Materials, designates a toxic hazard rating of moderate toxicity for 2,4-dichlorophenol. However, chlorinated phenols are designated as highly toxic local and systemic compounds.

2. 2,4,6-Trichlorophenol

Health Effects - 2,4,6-trichlorophenol induced cancer in mice during long-term oral feeding studies.(18) This compound has also been identified by EPA's Carcinogen Assessment Group as exhibiting substantial evidence of carcinogenicity.(27) It has been acutely lethal to humans by ingestion at 60 percent of the oral LD_{50} dose in rats [500 mg/Kg].(19) This chemical is reportedly mutagenic(20)

and adversely affects cell metabolism.[21,22] Additional information and specific references on the adverse effects of 2,4-trichlorophenol can be found in Appendix A.

Ecological Effects - Very small concentrations of 2,4,6-trichlorophenol have been lethal to freshwater fish [LC_{50} = 426 ng/l]. This chemical is also lethal to freshwater invertebrates at very low concentrations.[24]

Regulatory Recognition of Hazard - 2,4,6-Trichlorophenol has been designated as a Priority Pollutant under Section 307(a) of the CWA.

Industrial Recognition of Hazard - Sax, in Dangerous Properties of Industrial Materials, lists 2,4,6-trichlorophenol as moderately toxic via the oral route.

IV. REFERENCES

1. U.S. Environmental Protection Agency, Office of Water Programs, The Pollution Potential in Pesticide Manufacturing, Contract 69-01-0142, June, 1972.

2a. U.S. Environmental Protection Agency, Office of Pesticide Programs Production, Distribution, Use and Environmental Impact Potential of Selected Pesticides, EPA 540/1-74-001, Washington, D.C., 1975.

2b. Aly, O.M., and S.D. Faust. Studies on the Fate of 2,4-D and Ester Derivatives in Natural Surface Waters. J. Agr. Food Chem. 12((6): 541-546, 1964.

3. U.S. Environmental Protection Agency, Industrial Process Profiles for Environmental Use, Chapter 8: Pesticides, EPA-600/77-023h, Research Triangle Park, North Carolina, January, 1977.

4. U.S. Department of Health, Education and Welfare, National Institute for Occupational Safety and Health, Registry of Toxic Effects of Chemical Substances, Cincinnati, Ohio, January, 1979.

5. U.S. Environmental Protection Agency, "Hazardous Waste Guidelines and Regulations," Fed. Reg. 43 (243): 58960, December 18, 1979.

6. Proprietary information submitted in 1978 to EPA in response to "308" letter by Thompson-Hayward Chemical Company.

7. Farm Chemicals Handbook, 1977, Meister Publishing Company, Willoughby, Ohio.

8. Proprietary information submitted to EPA by Rhodia, Inc., Agri. Division Portland, Oregon in 1978 response to "308" letter.

9. Proprietary information submitted to EPA by Transvaal, Inc., Jacksonville, Arkansas in 1978 in response to "308" letter.

10. Proprietary information submitted to EPA by Rhodia, Inc., on March 7, 1977.

11. Proprietary information from Draft Contractor Technical report for BAT Technology in the Pesticide Chemicals Industry by Environmental Science and Engineering, Inc., for U.S. EPA, 1979.

12. Deichmann, W. The toxicity of chlorophenols for rats. Fed. Proc. (Fed. Am. Soc. Exp. Biol.) 2:76 (1943).

13. Boutwell, R. K. and Bosch, D. K. The tumor-promoting action of phenol and related compounds for mouse skin. Can. Res. 19:413-424 (1959).

14. Farquharson, M. E. et al. The biological action of chlorophenols. Br. Jour. Pharmacol. 13:20 (1958).

15. Mitsuda, W. et al. Effect of chlorophenol analogues on the oxidative phosphorylation in rat liver mitochondria. Agric. Biol. Chem. 27:366 (1963).

16. Marhold, J. V. (1972). Sbornik Vysledku Toxikologickeho Vysetreni Latek a Pripravku, p. 79.

17. U.S. EPA (1978). In-depth studies on health and environmental impacts of selected water pollutants. Contract No. 68-01-4646. U.S. Environ. Prot. Agency.

18. NCI Carcinogenesis Bioassay, National Technical Information Service, Rpt. PB223-159, Sept. 1978.

19. Clinical Toxicology of Commercial Products. Gleason et al., 3rd Ed., Baltimore, Williams and Wilkins, 1969.

20. Fahrig, R. et al. Genetic activitiy of chlorophenols and chlorophenol impurities. Pp. 325-338. In Pentachlorophenol: Chemistry, Pharmacology and Environmental Technology. K. Rango Rao, Plenum Press, New York.

21. Weinback, E. C. and Garbus, J. The interaction of uncoupling phenols with mitochondria and with mitochondrial protein. Jour. Biol. Chem. 210:1811 (1965).

22. Mitsuda, H. et al. Effect of chlorophenol analogues on the oxidative phosphorylation in rat liver mitochondria. Agric. Biol. Chem. 27:366 (1963).

23. U.S. EPA, 1972. The effect of chlorination on selected organic chemicals. Water Pollut. Control Res. Agr. 12020.

24. U.S. EPA, 1978. In-depth studies on health and environmental impacts on selected water pollutants. Contract No. 68-01-4646.

25. Kozak, V. P., G. V. Simmons, G. Chesters, D. Stevsby, and J. Harkins. 1979. Reviews of the Environmental Effects of Pollutants: XI Chlorophenols. EPA-600/1-79-012. U.S. EPA, Washington, D.C. 492 pp.

26. Sinenson, H. A., 1972. The Montebello Incident. Proc. Assoc. Water Treatment and Exam. 11:84-88.

27. Carcinogen Assessment Group's List of Carcinogens, April 22, 1980.

LISTING BACKGROUND DOCUMENT

METHOMYL PRODUCTION

Wastewater from the Production of Methomyl (T)

I. Summary of Basis for Listing

The Administration has determined that the process wastewater from methomyl production may pose a substantial present or potential hazard to human health or the environment when improperly transported, treated, stored, disposed of or otherwise managed, and therefore should be subject to appropriate management requirements under Subtitle C of RCRA. This conclusion is based on the following considerations:

(1) The content of the process wastewater from each plant will vary but the toxic substances which may be found in the wastewater include methomyl, methylene chloride, and pyridine. Methomyl is extremely toxic and a mutagen and methylene chloride has been shown to be carcinogenic and mutagenic. Pyridine is toxic.

(2) Placement of these wastes in lagoons creates the potential for either groundwater or surface water contamination via leaching or overflow. Disposal by incineration, if mismanaged, could result in substantial hazard via an air exposure pathway through the release of toxic fumes due to incomplete combustion.

(3) Hazardous compounds in the waste are persistent and mobile and pose a risk of exposure to humans and the environment.

(4) The industry generates at least 100,000 lbs./year (dry weight) of wastewater treatment sludges, indicating that substantial amounts of process wastewater are generated annually, and that substantial amounts of hazardous constituents may be available for environmental release.

II. Sources of Waste and Typical Disposal Practices

A. Profile of the Industry

According to the SRI Directory of Chemical Producers,[1]

methomyl is produced by E.I. duPont Nemours and Company at its Houston plant (La Porte, Texas)* and by Shell Chemical Company at its Denver, Colorado plant. _____

_____

_____

_____

_____

_____ (2)**

Methomyl is an insecticide used for broad-spectrum control of insects in many vegetables, field crops, certain fruit crops and ornamentals.(3) Methomyl was developed by duPont in 1969 and its commercial use is relatively new.

B. Manufacturing Process - Methomyl synthesis may involve the following steps:(4)

1. $CH_3 - C \equiv N + CH_3SH + HCl \xrightarrow[\text{SOLVENT}]{\text{ETHER}}$ Methyl Thiolacetimidate (MTH)

2. $MTH + HO\,NH_2 \cdot HCl \xrightarrow{\text{PYRIDINE}}$ Corresponding Hydroxamates

3. Hydroxamate + $CH_3\,NCO \xrightarrow[CH_2Cl_2]{} CH_3 - \underset{\underset{\underset{\underset{\underset{O}{|}}{NOCNHCH_3}}{|}}{S}}{\overset{\overset{CH_3}{|}}{C}} = NOCNHCH_3$ Methomyl

---

* The duPont plant also produces bromacil, diuron and several other chemicals. _____ (5)

** The underlined data are obtained from proprietary reports and data files.

Process details for the commercial production of methomyl are not known beyond those shown in Figure 1.[5] The waste of concern is the wastewater from the pesticide reactor. No information is available on the Shell or Vertac production processes.

C. Waste Generation and Management - Process wastewater from methomyl production will contain methomyl, and is also expected to contain methylene chloride (a process solvent), and pyridene, a process reactant. Nitrosomethomyl, a reaction intermediate, may also be present.

(5)

(5) The plant itself is located very close to the Houston ship channel, near Galveston Bay.

(5)

(6)*

(2)

III. Discussion of Basis for Listing

A. Hazards Posed by the Waste

As stated above (p.3), the methomyl production process waste waters are expected to contain methomyl, and probably its reaction intermediate nitrosomethomyl, methylene chloride (a process solvent), and pyridene (a process reactant) as well.

Methomyl is mutagenic and extremely toxic and its potential metabolite, nitrosomethomyl is extremely carcinogenic and mutagenic. Methylene chloride is very toxic and has been shown to be mutagenic. There is also evidence that methylene chloride is carcinogenic. Pyridene is toxic. In fact, both methomyl and pyridene can pose an acute toxicity threat if they migrate at an order of magnitude less than their solubility limit, and thus can reach lethal levels in water at one-tenth their

* The underlined data are obtained from proprietary reports and data files.

limit of solubility.[34] Methyl chloride would exceed the proposed human health criteria for water quality if it solubilizes at less than one ten thousandth of its solubility limit.[34]*/

Furthermore, large quantities of process wastewater containing these harmful constituents are generated annually (see p.3), posing an increased likelihood of large-scale contamination should mismanagement occur, and making increased amounts of hazardous constituents available for environmental release. Therefore, the Agency would be justified in not listing these waste streams only if it were assured that hazardous waste constituents would not migrate and persist. Such assurance does not appear possible.

All of these compounds are capable of migration. They are all extremely soluble (solubility ranging from 20,000 ppm (methylene chloride) to 100% solubility for pyridene).[34] Methylene chloride may also migrate by volatilizing (vapor pressure 350 mm Hg, quite volatile).[34]

The waste constituents, once released from the waste matrix, are expected to be mobile and persistent. Methomyl would undergo some degradation in the soil, but it is substantially more stable than most carbanate insecticides. The reported half life of methomyl is 50 days.[8] This, coupled with the high solubility of this compound in water[9][34] and its tendency to move readily through the soil with infiltrating water[10], would likely result in its entering groundwater with little attenuation in concentration. Once in the groundwater environment, it would be

---

*/The Agency is not using the proposed Water Quality Criteria as a regulatory benchmark, but is referring to them here to illustrate methylene chloride can create a potential hazard substantial hazard if it migrates from the waste at a rate far less than its water solubility limit.

expected to be persistent and mobile (App. B). Hence, it could move to wells providing drinking water or to points of discharge of groundwater into surface water, resulting in exposure of humans and aquatic ecosystems to this compound (App. B).

Methylene is also very soluble in water [11][34], and would be expected to move readily through the soil profile into and through groundwater, based on the demonstrated mobility of closely related halomethanes such as chloroform in subsurface environments. [12,13,14] Methylene chloride has been found in groundwater in Massachusetts, probably as the result of leakage of nearby chemical waste lagoons, strongly suggesting potential mobility and persistence.[14] Methylene chloride is also stable in air (34), and so could persist after volatilizing.

Pyridine sorbs to clay soils, but desorbs in acidic pH conditions.[34] Mobility, thus could be high in non-clay soils, on where soils are acidic. It also biodegrades moderately quickly (34), but would be exptected to persist in the abiotic conditions of most aquifers.

The pyridine in this waste might also enter groundwater under these conditions as indicated by a recorded case of the movement of this and related compounds from a chemical waste lagoon through an unsaturated soil into groundwater and thence to nearby domestic wells.[15]

_____ Treatment ponds could be improperly designed or managed (i.e., located in areas with highly permeable soils, lacking proper leachate control systems, and where site runoff or lagoon washout is not controlled).*

*Methylene chloride may also volatilize from a sludge, so that uncovered disposal sites may create a hazard via an air exposure pathway.

(5)

*

Disposal by incineration, if mismanaged, can result in substantial hazard to human health via an air inhalation pathway. If incineration facilities are operated in such a way that combustion is incomplete (i.e., improper conditions of temperature, mixing and/or residence time), the release into the air of hazardous vapors containing undestroyed waste constituents and/or their toxic degradation products could present a significant opportunity for exposure of humans to hazardous constituents.

In any case, it should be noted that in making a determination as to the hazardousness of this waste, the Agency is not limited to

*

consideration of existing waste management methods, since absent regulation there is no guarantee a particular method will be adopted. Thus, less satisfactory management of this waste could be adopted, resulting in even greater potential for constituent release.

Thus, waste constituents appear capable of migration, mobility and persistence. Mismanagement of the wastes is also possible. Under these circumstances, and in light of the hazards associated with waste constituents, the Agency believes that substantial hazard could follow waste mismanagement.

B. Health and Ecological Effects

1. Methomyl

Health Effects - Methomyl is an inhibitor of the nerve transmitter (cholinesterase), and is extremely toxic in rats [oral LD_{50} = 20 mg/kg].(25) The acute inhalation toxicity of this chemical is also extremely high [rats LD_{50} = 0.30 - 0.45 mg/L), depending on formulation. Methomyl is mutagenic (26) and a potential metabolite nitrosomethomyl is extremely mutagenic(27) and carcinogenic.(28) In animals, methomyl reduced growth and hemoglobin levels.(29)

Additional information and specific references on adverse effects of Methomyl can be found in Appendix A.

Regulations - The Office of Water and Waste Management is in the process of conducting preregulatory assessment of methomyl under the Safe Drinking Water Act. The Office of Toxic Substances has promulgated regulations for methomyl under Section 3 of the Federal Insecticide, Fungicide and Rodenticide Act.

2. Methylene Chloride

Health Effects - Methylene chloride (dichloromethane) has been shown to be mutagenic.[16,17] Inhalation of this chemical in an occupational setting has reportedley caused gynecologic problems in women[18], and been toxic to fetuses and embryos of rats and mice.[19,20] Methylene chloride is very toxic [oral rat LD_{50} = 167 mg/kg][21] with acute sublethal exposures resulting in central nervous system disfunction and reduced oxygen-binding in red blood cells.[22]

There is evidence in animal studies that methylene chloride is carcinogenic.[23] Additional information and specific references on adverse effects of methylene chloride can be found in Appendix A.

Ecological Effects - For methylene chloride, the criterion values for protection of freshwater aquatic life protection is 4 mg/l and for salt water aquatic life is 1.9 mg/l.[24] Sensitivity of lower aquatic life forms (e.g., algae was less than that of animal life).[24]

Regulatory Recognition of Hazard - Methylene chloride is designated as a priority pollutant under section 307(a) of the CWA. OSHA regulations designate a TWA of 500 ppm for an 8-hour period of exposure.

Industrial Recognition of Hazard - Sax's Dangerous Properties of Industrial Materials lists methylene chloride as being moderately toxic via oral and inhalation routes.

3. Pyridene

Health Effects - Pyridene is toxic in rats[30] and humans[31],

causing central nervous system depression, skin and respiratory tract irritation in small doses.[32] Small doses administered chronically to animals also interfere with platelet production and cause damage to the bone marrow, liver and kidneys.[33]

Additional information and specific references on adverse effects of pyridene can be found in Appendix A.

Regulatory Recognition of Hazard - Pyridine has an OSHA standard air TWA of 5 ppm (SCL-P). DOT requires a label warning that the chemical is a flammable liquid.

Industrial Recognition of Hazard - Sax, Dangerous Properties of Industrial Materials, lists pyridines as having a moderate toxic hazard rating via oral, dermal and inhalation routes.

IV. References

1. 1977 Directory of Chemical Producers, Stanford Research Institute, Menlo Park, California.

2. Proprietary information submitted to EPA by duPont and Eagle River Chemical Corporation in response to "308" letters.

3. Farm Chemicals Handbook, 1977, Meister Publishing Company, Willoughby, Ohio.

4. Sittig, Pesticides Process Encyclopedia Noyes Data Corporation. Park Ridge, new Jersey, U.S.A., 1977.

5. Proprietary plant report; E.I. duPont de Nemours and Co., Houston, Texas, EPA Pesticide BAT Review; U.S. EPA IERL-RTP, 1979.

6. Proprietary information submitted to EPA by Shell Chemical Company, 1978, in response to "308" letter.

7. Warner et al. Identification of Toxic Impurities in Technical Grades of Pesticides Designated as Substitute Chemicals, EPA-600/1-78-031, May 1978.

8. Gubler, K., V. Flueck, and H. Brechbaehler. 1970. In: Insecticides Proceedings of the Second International IUPAC Congress of Pesticides Chemistry, Vol. 1, A. Tahari, ed. Gordon and Breach Science Publisher, New York.

9. Lawless, E.W., T.L. Ferguson, and A.F. Meivers. 1975. Guidelines for the Disposal of Small Quantities of Unused Pesticides. EPA-670/2-75-057. U.S. EPA, Washington, D.C.

10. Fung, K.H. and G.L. Briver. 1977. Leaching of Methomyl from Some Australian Tobacco Soils. Tob. Sci. 21:120-121.

11. Verschueren, Karl. 1977. Handbook of Environmental Data of Organic Chemicals. Van Nostrand Reinholt Co., N.Y.

12. Water Quality Issues in Massachusetts: Chemical Contamination Special Legislative Commission on Water Supply. September, 1979.

13. Wilson, J.T. and C.G. Enfield. 1979. Transport of Organic Pollutants Through Unsaturated Soil. Presented American Geophysical Union, Fall Meeting. December 3-7. San Francisco, CA.

14. Roberts, P.V.P.L. McCarty, M. Rinhardt, and J. Schriner. 1978. Organic Contaminant Behavior During Ground Water Recharge. Presented at 51st Annual Conference of the Water Pollution Control Federation. October 1-6, Anaheim, CA.

15. Burttschell, R.H., A.A. Rosen, and F.M. Middleton. 1961. Proceedings of 1961 Symposium on Ground Water Contamination. Technical Report W61-5. R.A. Taft Sanitory Engineering Ctr. U.S. DHEW.

16. Simmon, V. F., et al. Mutagenic Activity of Chemicals Identified in Drinking Water. (1977) (S. Scott, et al., eds) In Progress in Genetic Toxicology.

17. Jongen, W. M. F., et al. Mutagenic Effect of Dichloromethane on Salmonella typhimurium. Mutat. Res. 56:245 (1978).

18. Vozovaya (1974) as cited by ECAO Hazard Profile (1980).

19. Schwetz, B. A., et al. The Effect of Maternally Inhaled Trichloroethylene, Perchloroethylene, Methyl Chloroform, and Methylene Chloride on Embryonic and Fetal Development in Mice and Rats. Toxicol. Appl. Pharmacol. 23:84 (1975).

20. Nat'l. Inst. Occup. Safety and Health. (1976) Criteria for A Recommended Standard: Occupational Exposure to Methylene Chloride. HEW Pub. No. 76-138. U.S. Dept. HEW, Cincinnati, Ohio.

21. DOW Chemcial U.S.A. Material Safety Data Sheet. (Dow Chemical U.S.A., Midland, MI 48640). Jan., 1976.

22. Nat'l Acad. Sci. (1978) Non-Fluorinated Halomethanes in The Environment. Washington, D.C.

23. Theiss, J.C., et al. Test for Carcinogencity of Organic Contaminants of United States Drinking Waters by Pulmonary Tumor Response in Strain A Mice. Cancer Res. 37:2717 (1977).

24. U.S. EPA. 1979. Halomethanes. Ambient Water Quality Criteria. PB 296797. Criteria and Standards Division, Office of Water Planning and Standards, Washington, D.C.

25. Toxic Substances List, 1974.

26. Guerzoni, M., et al. Riv. Sci. Technol., Alimenti. Nutri. Um. 6:161 (1976).

27. Lijinsky, W. and Schmael, D. Ecotoxicol. Environ. Saf. 2:413 (1978).

28. Lijinsky, W. and Elespury, R. K. IARC Scientific Pub. No. 14 (1976).

29. Kaplan, A. and Sherman, H. Tox. Appl. Pharmacol. 40:1 (1977).

30. BIFAX Industrial Bio-Test Laboratories, Inc. Data Sheets. (1810 Frontage Rd., Northbrook, Ill.), 1970.

31. Gleason, M.N., et al. Clinical Toxicology of Commercial Products. Acute Poisoning. (1969) 3rd ed., p. 69.

32. Merck Index.

33. AGIGH (1976) TLV Documentation.

34. Dawson, English, Petty, 1980, "Physical Chemical Properties of Hazardous Waste Constituents."

Explosives

LISTING BACKGROUND DOCUMENT

EXPLOSIVE INDUSTRY

Wastewater Treatment Sludges from the Manufacture and Processing of Explosives (R)

Spent Carbon from the Treatment of Wastewater Containing Explosives (R)

Wastewater Treatment Sludges from the Manufacture, Formulation and Loading of Lead-Based Initiating Compounds (T)

Pink/Red Waste from TNT Operations (R)

I. SUMMARY OF BASIS FOR LISTING

Explosives manufacturing produces wastewaters which are often sent to treatment facilities; the resulting wastewater, spent carbon, and/or wastewater treatment sludges resulting from the production of explosives have been found to contain explosive components which can pose an explosive hazard; one of the listed wastes contains the toxic heavy metal lead, and therefore, poses a toxicity hazard. The Administrator has determined that the explosives industry generates solid wastes which may pose a substantial present or potential hazard to human health or the environment when improperly transported, treated, stored, disposed of or otherwise managed. Under Subtitle C of RCRA. This conclusion is based on the following considerations:

1. Wastewater treatment sludges from the manufacturing and processing of explosives contain significant concentrations of explosive compounds which could pose an explosion hazard.

If improperly managed, this waste could thus present a substantial hazard to human health and the environment. Therefore, this waste meets the reactivity characteristic (§261.23).

2. Spent carbon columns from the treatment of wastewater containing explosives are saturated with explosive compounds (i.e., RDX, TNT, etc.). This waste, if improperly managed, could pose a substantial health and environmental hazard due to the explosive potential of the constituents in this waste. Therefore, this waste meets the reactivity characteristic (§261.23).

3. Wastewater treatment sludges from the manufacture, formulation, and loading of lead based initiating compounds contain substantial concentrations of the toxic heavy metal lead. The lead is in a relatively soluble form, and could migrate from the disposal site into groundwater. Therefore, if this waste is improperly managed and disposed, it could pose a substantial hazard to human health and the environment.

4. Pink/red water from TNT operations contains high concentrations of the explosive compound TNT. If improperly managed, this waste could thus present an explosive hazard, resulting in a substantial hazard to human health and the environment. Therefore, this waste meets the reactivity characteristic (§261.23).

II. OVERALL DESCRIPTION OF INDUSTRY

The explosives industry is comprised of those facilities engaged in the manufacture and load, assemble, and pack (LAP) of high explosives, blasting agents, propellants, and initiating compounds. High explosives and blasting agents are substances which undergo violent, rapid decomposition upon detonation by heat, friction, impact or shock. Initiating compounds, on the other hand, are used to initiate or detonate large quantities of less sensitive propellants or explosives.

Explosives are manufactured in both the commercial and

military sectors. Those companies (approximately 40) that commercially manufacture explosives are situated geographically in 104 facilities* located in 30 states throughout the country. The states with the greatest number of facilities are California, Utah, Missouri, and Pennsylvania. The military sector of the explosives industry is segregated into two groups: Government Owned and Contractor Operated (GOCO) plants and Government Owned and Government Operated plants (GOGO). The number of military plants in these two segments is estimated to be between 23 and 35. The states with major GOCO installations are Tennessee, Wisconsin, Virginia, and Illinois.

Approximate production ranges of individual explosives products are grouped below:

Production	Production Range (average daily production while operating in lb/day)
Manufacture of Explosives	1,000 to over 40,000
Manufacture of Propellants	200 to over 30,000
Manufacture of Initiating Compounds	under 1 to over 300

According to the U.S. Bureau of Mines[3], total consumption of explosives and blasting agents in 1978 was approximately 1.8 million metric tons. This figure only represents domestic sales by commercial producers. Production of explosives by

*The Bureau of Alcohol, Tobacco and Firearms lists 621 explosive manufacturers, including licensees and permittees for manufacture of explosives, distributors, users and mix and blend operators (LAP).

the military sector is not currently available.

In terms of growth, total commercial consumption of explosives and blasting agents has increased each year over the 1973-1978 period. Consumption has risen from approximately 1.3 million metric tons in 1973 to 1.8 million metric tons in 1978, representing an increase of 38 percent.

Out of the total 1978 consumption figure, consumption of "permissibles"* and "other high explosives" were approximately 19,000 metric tons and 81,000 metric tons respectively. Over the 1973-1978 period, consumption of permissibles has fluctuated from year to year; in 1978 consumption was approximately 7 percent less than in 1973. However, consumption of permissibles is expected to increase in the future due to increased coal mining activity to satisfy energy demands. Over the same five year period, consumption of "other high explosives" has declined each year; in 1978 consumption was approximately 32 percent below 1973 levels. This downward trend is largely attributable to the increase use of water gels (permissibles in a slurry form).

A. Manufacturing Process**

For the purpose of discussing specific manufacturing processes, explosives can be subcategorized into the following three groups: explosives manufacturing (for example, TNT and

*High explosives approved by the U.S. Bureau of Mines for the Safety and Health Administration for use in underground coal mines.

**This document describes only a few processes in the explosives industry. For a more detailed description, see Reference 22.

RDX), explosives processing (for example, dynamite and nitrocellulose-base propellants) and initiating compounds (for example, lead azide).

Explosives Manufacturing

Most explosive compounds are manufactured in a nitration reaction. The raw material varies, but always includes a nitrating acid, usually nitric acid or a mixture of nitric and sulfuric acids or nitric and acetic acids with various organic compounds (i.e., toluene, cellulose, glycerin, etc.). The major explosives produced are nitroglycerine (NG), nitroglycerine ethylene glycol dinitrate (NG/EGDN), pentaerythritol tetranitrate (PETN), nitrocellulose (NC), trinitrotoluene (TNT), cyclotrimethylene trinitramine (RDX), and cyclotetramethylene tetranitramine (HMX) (see Table 1). Figures 1 and 2 represent typical production diagrams for NG and RDX, respectively.

Explosives Processing (Dynamite and Propellants)

Two types of explosive processes will be discussed below as examples; dynamite and nitrocellulose-base propellants.

Dynamite - Dynamite formulations are usually composed of several dry ingredients in varying proportions and nitroglycerin (see Tables 2 and 3). In the formulation of dynamite, all ingredients except for nitroglycerin and/or ethylene glycol are premixed in batch dry blenders in buildings called "dope houses". The dope and the nitroglycerine and ethylene glycol are then batch blended in the mix house. The mix is transported to packaging

houses where they are loaded into waxed cardboard boxes or plastic tubes.[16]

Nitrocellulose-Based Propellants

Nitrocellulose-based propellants can be divided into single, double, and multi-based propellants. These propellants are made by colloiding and molding processes not unlike those used in the plastics industry. Single base propellants are compositions consisting mostly of nitrocellulose with minor amounts of plasticizers, stabilizers, burning rate catalysts, etc. Double base implies nitrocellulose plus a liquid nitrate ester, usually nitroglycerin, with stabilizers, catalysts, etc.; and multi-base implies a combination of several nitrate materials such as nitrocellulose, nitroglycerin, nitroguanidine triethyleneglycol dinitrate, with stabilizers and the like.[26]

Initating Compounds

Initiating compounds are manufactured by nitrating the starting materials (see Table 4) and precipitating the explosive. The three general steps are: (1) reacting the starting ingredients and precipitating the product in a kettle; (2) filtration; and (3) washing the product to remove impurities. Typical initiating compounds include tetracene, trinitroresorcinol (TNR), lead azide, lead styphnate, lead monomitroresorcinate (LMR), tetry and nitromannite. Figures 4 and 5 are typical flow diagrams for the production of initiating compounds, illustrating typical lead azide and lead mononitrorescorcinate production schematics respectively.

B. Waste Generation and General Description

Five solid wastes generated in the explosives industry have been identified and are described below. The production and waste treatment methods which generate these wastes are not usually found in any single facility.

Wastewater Treatment Sludges from the Manufacturing and Processing of Explosives*

Sludges are generated when wash waters pass through settling or catch basins or screens to remove particulate explosive residues. Some, but not all of the concentrated sludges are returned to the process. For clarity, explosive manufacturing and explosive processing will be discussed separately.

Explosive Manufacturing

As illustrated in Figures 1 and 2, during the manufacturing of explosive compounds, wastewaters are generated during the filtration/washing and the cleaning of the production equipment and facilities. Such wastewaters consist of particles of the explosive compound suspended in the wastewater along with solvents and cleaning agents. The particles of explosives are removed by gravity separation in catch basins or settling tanks. The resulting sludges contain significant concentrations of the explosive compound (i.e., nitroglycerine, TNT, RDX/HMX, etc.). While some of these sludges may be recycled back to the process, they are generally too

*Catch basin materials in RDX/HMX production was proposed as a hazardous waste on December 18, 1978 (43 FR 58959). This waste stream will not be listed in the final regulations since it is already incorporated in this listed waste stream.

contaminated with extraneous material to be reused. These sludges constitute the first listed waste stream and are marked I in Figures 1 and 2.*

Explosive Processing (e.g., blasting agents and ordinance)

During the processing of explosive compounds into commercial and military explosive agents and propellants, wastewaters containing explosive compounds are produced during several operations. Among these operations are the following:

- Cleaning of blending, packaging and handling equipment and storage facilities;
- Wet milling of propellant castings;
- Operation of air pollution control devices which employ wet scrubbers to control emissions and dust inside production buildings;
- Loading, assembling and packaging of ordinance.

Treatment of these wastewaters also produces a wastewater treatment sludge.(14)

Spent Carbon from the Treatment of Explosives Containing Wastewaters

Because of the potential hazard that might result from the discharge of wastewater contaminated with explosives, a number of military installations employ carbon treatment

*The other waste which is generated (as shown in Figures 1 and 2) consists of spent acid solutions resulting from the nitration step. Acidic wastes are usually recovered for reuse following acid reconcentration or reprocessing. Presently, the Agency does not have any data to justify listing this waste. However, if thes spent acids are hazardous as defined in Subpart C of Part 261, the generator would be responsible for managing these wastes under the Subtitle C regulatory control system.

of these wastewaters, which result from the loading, assembling, and packaging operations. This treatment is designed to remove organic contaminants (including those that are explosive) from the wastewater after the initial settling (see Wastewater Treatment Sludges from the Manufacturing and Processing of Explosives).

During carbon treatment, the aqueous waste is passed through chambers or columns containing activated carbon. The explosives and other organic contaminants are then abosrbed into the carbon. After the carbon becomes saturated, it is removed from the chamber or column; fresh carbon is then added and the spent absorbant discarded. At this point, the carbon contains high concentrations of explosive compounds.

Wastewater Treatment Sludges from the Manufacture, Formulation and Loading of Lead-Based Initiating Compounds

During the various stages in the manufacture and formulation of lead-based initiating compounds and their fabrication into finished products, wastewater contaminated with the initiating compounds and their feedstock is produced. These wastewaters are treated in a catch basin and the resulting sludges treated with either sodium hydroxide or heat to remove any residual explosive material. However, while this process removes any possible reactivity hazard, the sludge still contains substantial quantities of leachable lead.

Pink/Red Water from TNT Operations

During the production and formulation of TNT and TNT-containing formulations and products, an alkaline, red-colored aqueous waste is generated. This waste stream is composed of TNT purification filtrates, air pollution control scrubber effluents, washwater from cleaning of equipment and facilities, and washwater from product washdown operations (e.g., cleaning of loaded shells prior to packaging). The pink or red coloration of the waste stream results from contamination of the water with traces of TNT (solubility of TNT in water is 1 mg/liter). Red water is more concentrated, and thus more contaminated than the pink water.

C. Quantities of Waste Generation

It is estimated that the total amount of hazardous waste generated by all commercial and GOCO facilities is approximately 21,500 tons (19,350 metric tons dry basis) per day.[5] Approximately eight percent of the waste is from commercial sources and 92 percent is from military and GOCO sources (Table 5).

IV. CURRENT DISPOSAL PRACTICES

Current disposal practices for the five listed wastes may be summarized as follows:

- Wastewater treatment sludges from the manufacturing and processing of explosives.

In explosives manufacturing, the wastewater treatment sludges removed from the manufacturing of explosives are typically disposed of by open burning. Some plants, however, make use of percolation/evaporation ponds for

final disposal of compounds like NG, where the liquid leaches into the ground. Another technique employed by some plants is the discharge of wastewater to earthen sumps where, twice a year, the sumps are allowed to dry up and the sediments decontaminated for residual NG and DNG (dinitroglycerin); decontamination usually involves placing the explosives on the bottom of the sump and detonating the explosives.

- Spent carbon from the treatment of wastewater containing explosives

At present, the spent carbon are typically disposed of through open burning or incineration.

- Wastewater treatment sludges from the manufacture, formulation and loading of lead-based initiating compounds.

The wastewater treatment sludges are treated by boiling and/or the addition of a caustic solution, usually sodium hydroxide and aluminum, to decompose any residual explosive compounds. After treatment, the sludges are sent to a lagoon. The sludges from the lagoons are removed every few years and disposed of in a landfill.(4) In some cases, however, the sludges from the sumps and storage tanks will be sent directly to a landfill after treatment.

- Pink/red water from TNT operations *

*The Agency is aware that under full production, AAP's have used the rotary kiln to incinerate pink and red water. However, presently the Agency does not have adequate information on the residual ash to warrant a listing.

Disposal practices that have been used include the placing of pink/red water in evaporation ponds.*

V. DISCUSSION OF BASIS FOR LISTING

A. Hazardous Properties of the Wastes

Solid waste materials generated by the explosives industry contain a number of explosive components which, if improperly managed, could pose a substantial hazard to human health or the environment. Data presented in Tables 7-10 support the listing of these waste streams.

1. Wastewaters generated from the manufacturing and processing of explosives have been found to contain significant concentrations of explosive compounds such as nitroglycerine, nitrocellulose, TNT, RDX, HMX, and other nitrated compounds (Table 7). These explosives are highly sensitive to impact, heat, and friction. Most of these compounds are relatively insoluble in water (see Table 6); thus they are expected to settle-out of the wastewater and be present in the wastewater treatment sludges. The presence of these explosives in the sludges pose a substantial explosive

*The disposal of pink/red water in evaporation ponds generates a bottom sludge which is typically removed and open burned.[22] These sludges are included in the first listed waste stream (i.e., "Wastewater Treatment Sludges from the Manufacture and Processing of Explosives." The industry practice of open burning these wastes is employed because it is by far the safest method of handling these highly reactive wastes. This cautious disposal practice by the industry substantiates further the hazards posed by these wastes if they are not properly disposed of and managed.

hazard to human health and the envrionment; therefore, this waste meets the reactivity characteristic (§261.23).

2. The spent carbon, when wasted, are saturated with high concentrations of explosive compounds (i.e., TNT and RDX) (Table 8). These compounds are highly reactive/ explosive, and thus, the presence of these explosives in the spent carbon would thus pose a substantial hazard to both human health and the environment; therefore, this waste would meet the reactivity characteristic (261.23).

3. Wastewater treatment sludges from the manufacture, formulation, and loading of lead based initiating compounds have been shown to contain significant concentrations of lead (Table 9). This waste, if improperly managed, could pose a substantial hazard to human health and the environment. Typical industry disposal of this waste is in a landfill, which, if subjected to an acidic environment, will certainly enhance the solubility of lead and other heavy metals, since their solubility is pH dependent (i.e., solubility increases as the pH decreases).[27]

The hazard associated with the leaching of lead from improperly designed and operated landfills is the migration of this contaminant into ground and surface waters. Thus, if solids are allowed to be disposed of in areas with permeable soils, the solubilized lead could migrate from the site to an aquifer. Surface waters may also become contaminated if run-off from the landfill is not controlled by appropriate diversion systems.

Compounding this problem, and an important consideration for the future, is the fact that should the lead escape from the disposal site, it will not degrade with the passage of time, but will provide a potential source of long-term contamination.

4. Finally, red and pink water from TNT operations have been shown to contain significant concentrations of TNT, which is an explosive (Table 10). These compounds are also highly reactive/explosive, and thus, the presence of TNT in the pink/red water would also pose a substantial hazard to both human health and the environment; therefore, this waste would meet the reactivity characteristic (§261.23)

B. Health and Environmental Effects

Lead is a toxic compound that could threaten the health of both humans and other organisms. The hazards associated with lead include neurological damage, renal damage and adverse reproductive effects. In addition, lead is carcinogenic to laboratory animals, and relatively toxic to freshwater organisms. It also bioaccumulates in many species. Additional information on lead can be found in Appendix A.

Hazards associated with exposure to lead has been recognized by other regulatory programs. For example, Congress designated lead as a priority pollutant under §307(a) of the Clean Water Act and an interim drinking water standard of 0.05 ppm has also been promulgated by EPA. Under §6 of the Occupational Safety and Health Act of 1970, a final standard

for occupational exposure to lead has been established.[23,24] Also, a national ambient air quality standard for lead has been announced by EPA pursuant to the Clean Air Act.[24] In addition, final or proposed regulation of the states of California, Maine, Maryland, Massachusetts, Minnesota, Missouri, New Mexico, Oklahoma and Oregon define lead containing compounds as hazardous wastes or components thereof.[25]

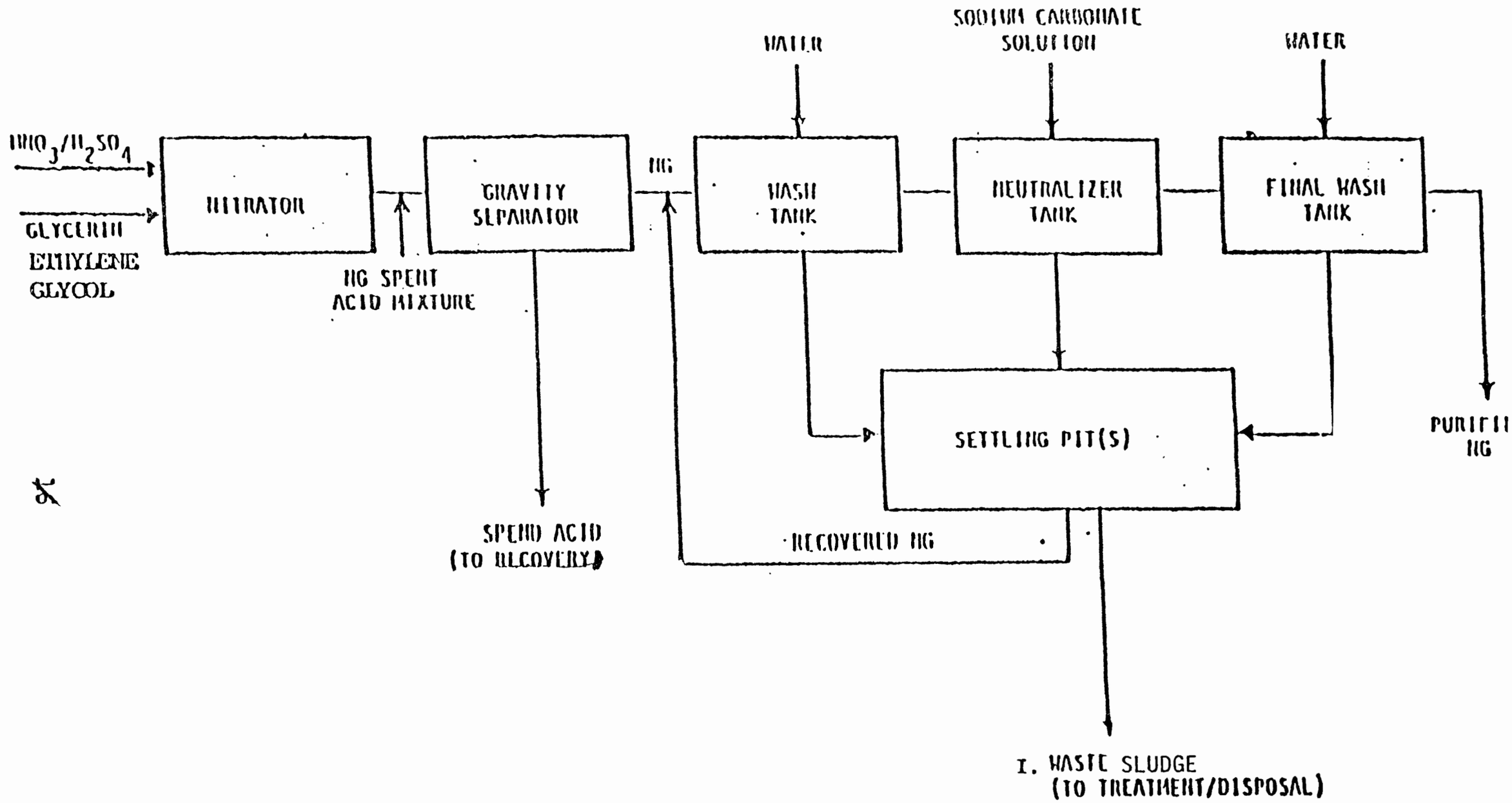

Figure 1. Schematic Flow Diagram for NG Production

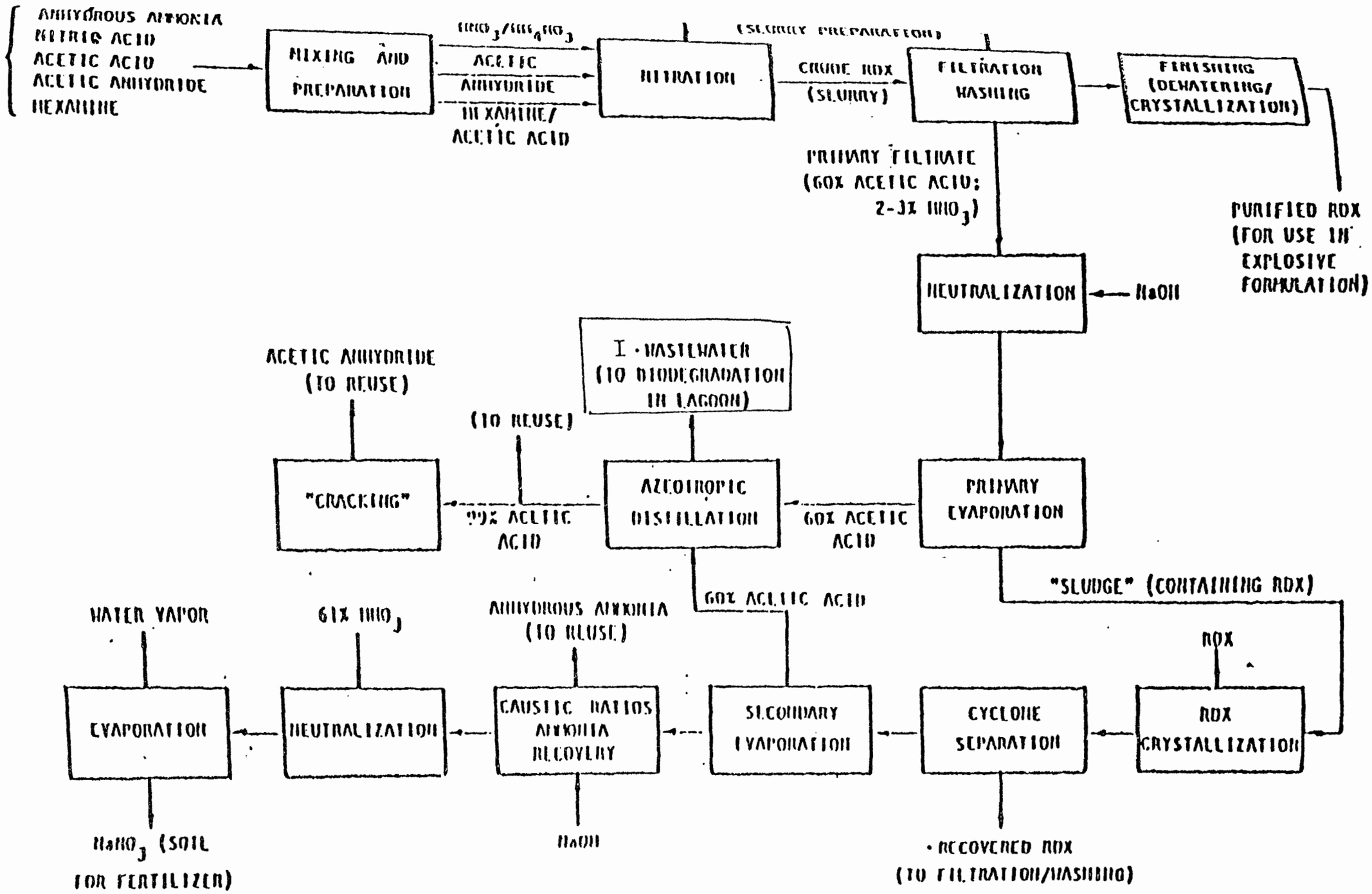

Figure 2 Schematic Flow Diagram for RDX Production.
Source (5); Figure 5-32, pg. 5-123.

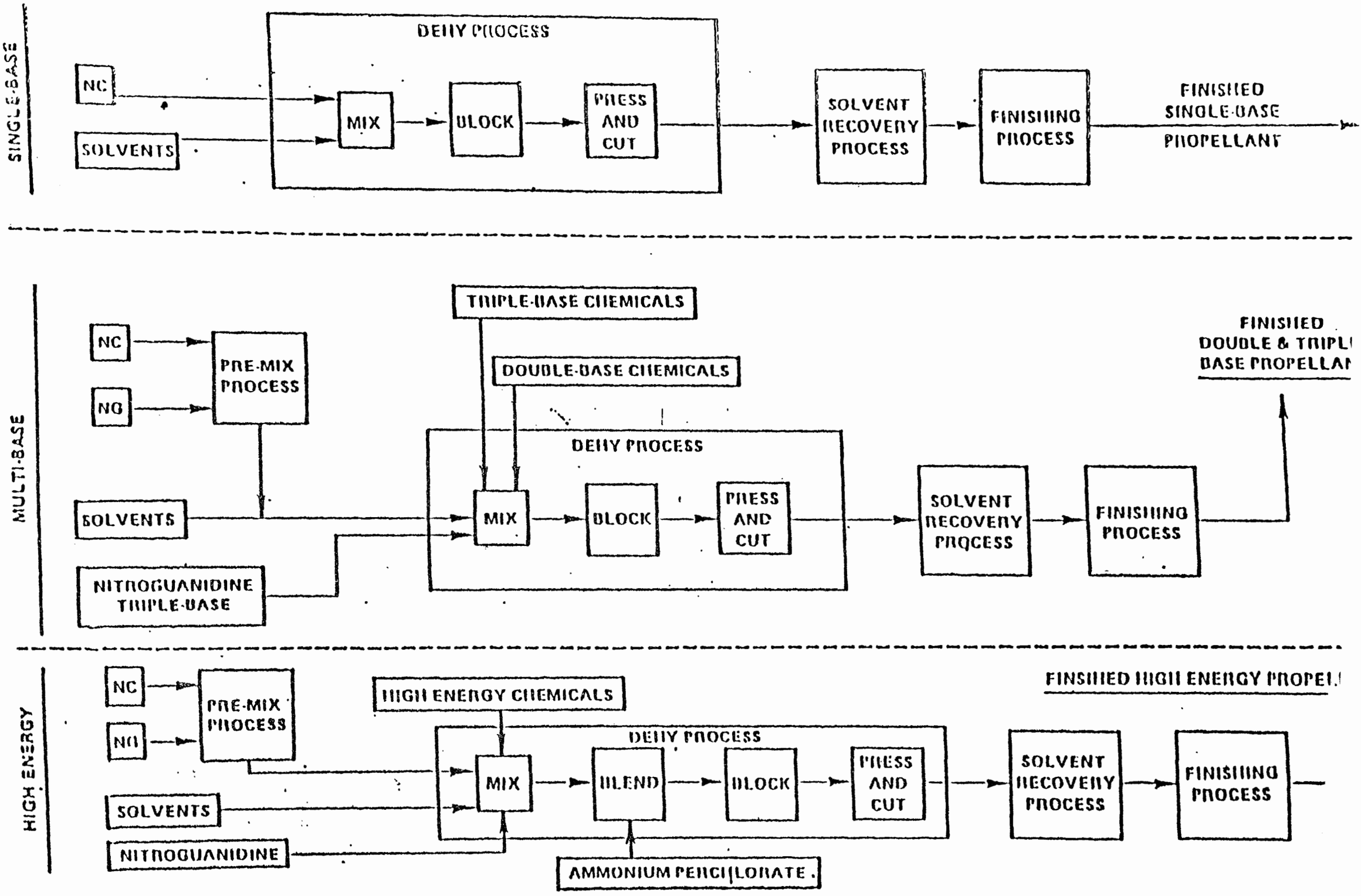

Figure 3. Solvent Propellant Production Schematic

Source: (1) Figure IV-6, pg. 50.

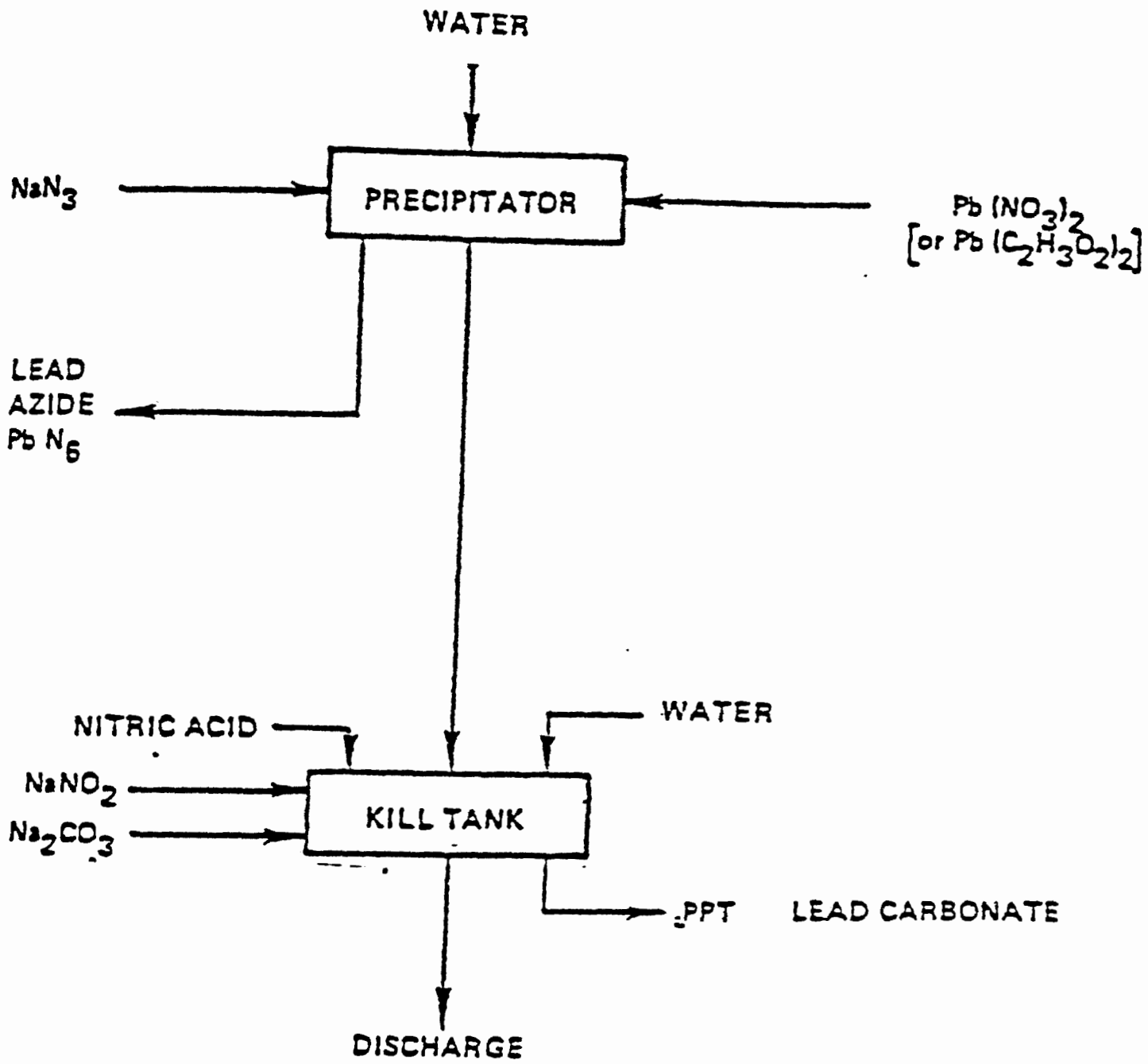

Figure 4. Typical Lead Azide Production Schematic.

Source: (2); Figure IV-8, pg. 53.

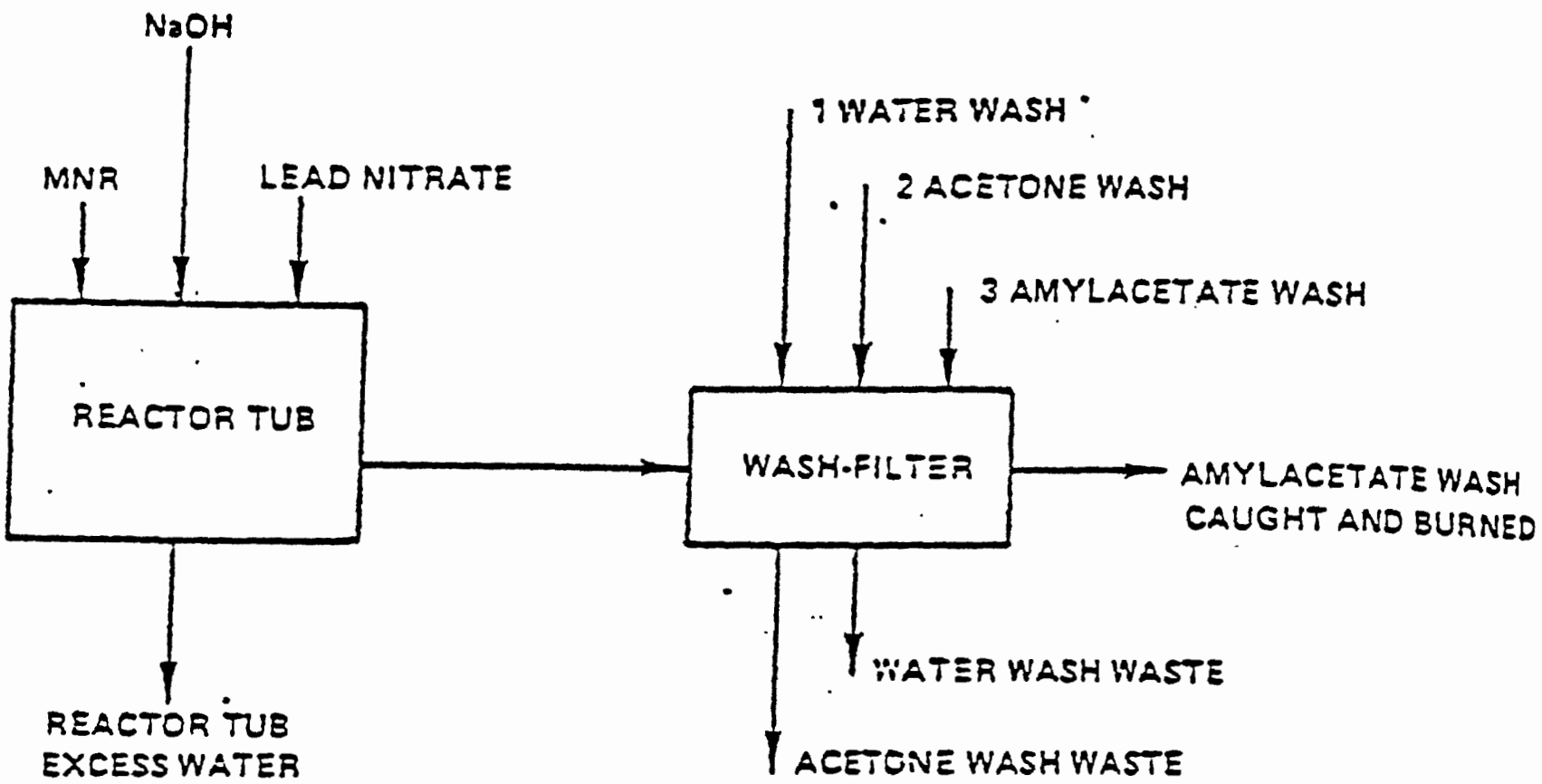

Figure 5. Typical Lead Mononitroresorcinate Production Schematic

Source: (2); Figure IV-10, pg. 57.

VII. TABLES

TABLE 1. COMMON RAW MATERIALS IN THE MANUFACTURE OF EXPLOSIVE COMPOUNDS

Compound	Raw Material(s)	Nitrating Acid	Additives
NG	glycerine	nitric acid and sulfuric acid	ethyl acetate
NG/EGDN	glycerine ethylene glycol	nitric acid and sulfuric acid	ethyl acetate
PETN	pentaerythritol	nitric acid	acetone
NC	cellulose	nitric acid and sulfuric acid	dibutyl phthalate phenylamine
RDX/HMX	hexamine	nitric acid and acetic acid	acetic anhydride ammonium nitrate cyclohexanone acetone
TNT	toluene	nitric acid and sulfuric acid	sodium sulfite

Nitroglycerin
Barium sulfate
Ammonium nitrate
Ammonium chloride
Sodium nitrate
Sodium chloride
Calcium carbonate
Calcium stearate
Sulfur
Nitrocellulose
Phenolic resin or glass beads
Bagasse
Sawdust and wood flour
Coal
Corn meal and corn starch
Inorganic salts
Grain and seed hulls and flours

Source: (4) page II-2.

TABLE 3. TYPICAL COMPOSITION OF DYNAMITE

Component	Percent, wt.
ammonium nitrate	50-55
nitroglycerine	15-18
sodium nitrate	0-17
other ~~trace~~ ingredients	10-35

Source: (11) Table 7, pg.30.

TABLE 4. RAW MATERIALS FOR INITIATING COMPOUNDS

Compound	Starting Materials
Tetracene	Aminoguanidine bicarbonate, sulfuric acid, sodium nitrate
TNR	Resorcinol, sulfuric acid, nitric acid
Lead azide	Sodium azide, lead nitrate or lead acetate nitric acid, sodium nitrate
Lead styphnate	TNR, magnesium oxide, lead nitrate
Nitromannite	Mannitol, sulfuric acid, nitric acid
LMR	Mononitroresorcinate, sodium hydroxide, lead nitrate
Tetryl	Nitric acid, sulfuric acid, dimethylaniline

TABLE 5: - EXPLOSIVES[a]

Industrial Hazardous Waste Quantities by Disposal Method						
Industry Segment	Waste Type	Total Hazardous Waste Tonnes/Year, 1977 (Dry Basis)	Disposal Methods Tonnes/Year, 1977 (Dry Basis)			
			Open Burned[b]	Landfilled	Sold	Other[c]
Private Explosives Industry:	Fixed high explosive waste	~460	>430	Negligible	<5	<26
	Blasting agents	~1,200	>1,100	Negligible	<12	<74
	Subtotals	~1,700 (~5,500-Wet Basis)	>1,500	Negligible	<17	<100
Government Owned, Contractor Operated (GOCO) Explosives Industry:	Explosive wastes	4,900	4,000	--	140	--
	Explosive contaminated inert wastes	14,700	13,700	1,000	--	--
	Other hazardous wastes[d]	240	90	140	20	--
	Subtotals	~19,000[e]	18,600	1,140	160	--
Explosives Industry Grand Totals		~21,500 (~25,400-Wet Basis)	20,100	1,140	~180	<100

[a]Reference 5
[b]Predominantly onsite, >90 percent
[c]Includes chemical detoxification and subsequent disposal; usually landfill, deep well disposal, spray irrigation, lagooning, ect.
[d]Includes spent activated carbon from processing aqueous hazardous wastes (open burned), red water from TNT purification (evaporated and sold), organic solvents from propellant manufacture, and wastewaters containing dissolved and suspended RDX/HMX
[e]Dry Basis = Wet Basis

Source: (1) Table 6-9, page 35.

TABLE 6

SOLUBILITY FACTORS FOR EXPLOSIVE COMPOUNDS

Compound	Solution	Solubility	Temperature
NG	water	0.14 g/100g	25°C
	water	0.24 g/100g	60°C
EGDN	water	0.68 g/100g	20°C
	acetone	very soluble	25°C
	ethyl ether	very soluble	
PETN	water	insoluble	
RDX	water	insoluble	
Lead azide	water	0.02 g/100g	18°C
	water	0.09 g/100g	70°C
Nitromannite	water	insoluble	
	ethanol	2.9 g/100g	13°C
	ether	4 g/100g	9°C
Lead styphnate	water	0.04 g/100g	

TABLE 7.

1. Wastewater treatment sludges from the manufacture and processing of explosives (R)

Process	Waste (Concentration)
Nitration of cellulose (Note: nitrocellulose is used in a number of industries)[19]	Sludge (25% water and 75% nitrocellulose) at 60 ton/yr at one plant
Nitrocellulose (NC) Production[5]	NC fines lost in overflow will be picked up in settle basin or other waste water sludge and is estimated at 1 metric ton (2200 lbs) per day per line or about 0.072% of NC output.
Nitroglycerin (NG) production[5]	NG lost to wastewater at 0.006 kg per Kg NG produced
Nitroglycerin production[2]	NG discharges in wastewater: as high as 1000 mg/l
TNT production[2]	100 mg/l of TNT to wastewater
Nitrocellulose production[2]	NC fines can produce levels of solids from 1000 to 10,000 mg/l
Batch Nitroglycerin Production[7]	Wastewater (315 to 12,700 ppm)
Combined wastewater of Radford AAP continuous NG Nitration and Spent Acid[7]	Nitroglycerin in wastewater (800 to 1,800 ppm)
RDX/HMX production[7]	Catch basins remove 33 percent of RDX and 62 percent of HMX from

TABLE 8.

3. Spent carbon from the treatment of wastewater containing explosives (R)

Process	Waste (Concentration)
LAP Melt loading of 105mm Cartridge[5]	Composition B* washings to Carbon Columns at a rate of 3.64 kg per 10,000 loaded rounds
LAP 40mm Cartridge[5]	Composition B to Carbon Columns at a rate of 0.45 kg per 10,000 loaded rounds

*Composition B--60% RDX. 39% TNT, 1% Wax

TABLE 9.

4. Wastewater treatment sludges from manufacture, formulation and loading of lead based initiating compounds (T)

Process	Waste (Concentration)
Initiating Compounds[19]	Aqueous waste containing 0.3% Pb @ at one plant that produced 300 M gal per year
Initiating compounds[19]	Precipitate 100%. Pb CO_3, one plant produced 1 ton per year.
Initiating Compounds[19]	Aqueous Waste (Pb 1.2 ppm) one plant producing 12.5 M gal/yr
Production of lead azide and lead styphnate[2]	200 mg/l in wastewater which contributes approximately 2 lbs a day of Pb

TABLE 10.

5. Pink/red water from TNT operations (R)

Process	Waste (Concentration)
TNT Production[5] (batch process)	Red water solids are produced at a rate of (0.2398 kg per Kg TNT produced)
TNT Production[5] (continuous process)	Red water produced at a rate of)0.50 kg per kg TNT) produced which contains 6% TNT isomers and alpha- TNT
LAP[2]	Pink water with about 4.5% TNT (2,4,6-TNT) and by products (isomers)
TNT Production[6]	Red water (0.34 kg per kg produced TNT)
Evaporator Condensate[7] (A source of pink water)	Pink water (as high as 150 mg/l of TNT)

Note: Despite the relatively low TNT concentration of evaporator condensate, the mass discharged may be substantial. For example, at full TNT production the condensate discharged for Joliet AAP is projected at 325 gals per minute. A TNT concentration of 4 mg/l, this represents a daily-discharged of 15.6 pounds of TNT.[7]

VI. References

1. Van Noordwyk, H., L. Schalit, W. Wyss, H. Atkins. Quantification fo Municipal Disposal Methods for Industrially Generated Hazardous Wastes. USEPA-600/2-79-135, Municipal Environmental Research Laboratory, Cincinnati, Ohio, August 1979.

2. U.S. Environmental Protection Agency. Development Document for Interim Final Effluent Limitations, Guidelines and Proposed New Source Performance Standards. Effluent Guidelines Division, Office of Water and Hazardous Materials, USEPA 440/1-76-060, Washington, D.C., March 1976.

3. Bureau of Mines, U.S. Department of the Interioor. Mineral Industry Surveys. Explosives Annual. 1978.

4. Patterson, James, Norman I. Shapira, John Brown, William Duckert, and Jack Polson. State-of-the Art: Military Explosives and Propellants Production Industry. Volume II, Waste Characterization. EPA-600/2-76-213b, August 1976.

5. TRW Systems Group. Assessment of Industrial Hazardous Waste Practices, Organic Chemicals, Pesticides, and Explosives Industries. PB 251-307, April 1975.

6. Hudak, Charles E., and Terry B. Parsons. Industrial Process Profiles for Environmental Use. Chapter 12, The Explosives Industry. PB 291-641, February 1977.

7. Patterson, James, J. Brown, W. Duckert, J. Polson, and N.I. Shapira. State-of-the-Art: Military Explosives and Propellants Production Industry. Volume III, Wastewater Treatment. EPA-600/2-76-213c, October 1976.

8. Process Research, Inc. Alternatives for Hazardous Waste Management in the Organic Chemical, Pesticides, and Explosives Industry. EPA Contract No. 68-01-4127, September 2, 1977.

9. U.S. Department of Health, Education, and Welfare. Registry of Toxic Effects of Chemical Substances, June 1975.

10. U.S. Environmental Protection Agency. Disposal of Hazardous Wastes. Office of Solid Waste Management Programs, 1974.

11. Patterson, J.W., and R.A. Minear. State-of-the-Art for the Inorganic Chemicals Industry Commercial Explosives. EPA-600/2-74-009b, March 1975.

12. Ottinger, R.S. J.L. Blumentahl, D.F. DalPorto, G.I. Gruber, M.J. Santy, and C.C. Shih. Recommended Methods of Reduction, Neutralization, Recovery, or Disposal of Hazardous Waste. Volume VIII. EPA-670/2-73-053g, U.S. EPA, Washington, D.C. August 1973.

13. Patterson, James, Norman I. Shapira, John Brown, William Duckert, and Jack Polson. State-of-the-Art: Military Explosives and Propellant Production Industry. Volume I, The Military Explosives and Propellants Industry. EPA-600/2-76-213a, October 1976.

14. Hydroscience, Inc. Draft Development Document for Proposed Effluent Limitations Guidelines, New Source Performance Standards and pretreatment Standards for the Explosives Manufacturing Point Source Category, April 1979.

15. Griffin, T.B., and J.H. Knelson. Environmental Quality and Safety, Supplement Volume II. Academic Press, New York, 1975.

16. U.S. Environmental Protection Agency. The Health and Environmental Impacts of Lead and an Assessment of the Need for Limitations. Office of Toxic Substances, EPA-560/2-79-001, 1979.

17. Sax, Irving, Dangerous Properties of Industrial Materials. Third Edition. Van Nostrand Reinhold Company, New York, 1968.

18. U.S. Environmental Protection Agency. The Prevalence of Subsurface Migration of Hazardous Chemical Substances at Selected Industrial Waste Land Disposal Sites. EPA-530 SW-634, October 1977.

19. State of New Jersey. Unpublished Data, Waste Characterizati Data from the State file of "Industrial Waste Surveys" to Claire Welty of OSW. 8/31/79 and 9/4/79.

20. Sax, Irving. Dangerous Properties of Industrial Materials. Fifth Edition. Van Nostrand Reinhold Company, New York. 1979.

21. Searle, C.E. (editor) Chemical Carcinogens ACS Monograph 173. Washington, D.C. 1976.

22. JRB Associates, Inc., Evaluation of Treatment, Storage and Disposal Techniques for Ignitable, Volatile and Reactive Wastes. U.S. EPA, OSW, Contract Number 68-01-5160. Draft. January 17, 1980.

23. U.S. Department of Interior, Bureau of Mines, Mineral Commodity Summaries, 1979.

24. U.S. Department of Health, Education and Welfare, National Institute for Occupational Safety and Health. Registry of Toxic Effects of Chemical Substances. 1977.

25. U.S. EPA States Regulation Files, January, 1980.

26. U.S. EPA, State-of-the-Art: Military Explosives and Propellants Production Industry, Volume 1 - The Military Explosives and Propellants Industry, Industrial Environmental Laboratory, PB 265-3885 c.1, October, 1976.

27. Pourbaix, Marcel. Atlas of Electrochemical Equilibria in Aqueous Solutions, London, Pergamon Press, 1966.

Petroleum Refining

LISTING BACKGROUND DOCUMENT

PETROLEUM REFINING

API Separator Sludge (T)

Dissolved Air Flotation (DAF) Float (T)

Slop Oil Emulsion Solids (T)

Heat Exchanger Bundle Cleaning Sludge (T)

Tank Botton (Leaded) (T)

Summary of Basis for Listing

The listed wastes discussed in this document are sludges which arise either from the treatment of wastewater generated during petroleum refining operations (i.e., API separator sludge, dissolved air flotation (DAF) float and slop oil emulsion solids) or from the clean-up of equipment/storage tanks used in the refinery (i.e., heat exchanger bundle cleaning sludge and tank bottoms (leaded)). The Administrator has determined that these sludges are solid wastes which may pose a substantial present or potential hazard to human health or the environment when improperly transported, treated, stored, disposed of, or otherwise managed, and therefore should be subject to management under Subtitle C of RCRA. This conclusion is based on the following considerations:

1. These wastes contain significant concentrations of the toxic heavy metals, lead and chromium.

*These wastes also contain concentrations of certain other heavy metals listed in Appendix VIII of Part 261. However, in the Administrator's view, the concentrations of these waste constituents are insufficient to warrant regulatory concern.

In some waste streams the concentrations of lead and chromium exceed 1,000 mg/kg (dry weight). In addition to being toxic, lead has been shown to be potentially carcinogenic and bioaccumulative.

2. Large quantities (a combined total of approximately 66,610 metric tens (dry weight)) of these wastes are generated annually.

3. Chromium and lead have been shown to leach from the waste API separator sludge and DAF float in significant concentrations when subjected to a water-washing step which simulates leaching activity. Furthermore, if the last three listed wastes are disposed of in an acidic environment, the solubility of the lead and chromium waste constituents will certainly be enhanced, since these toxic heavy metals' solubilities are pH dependent (i.e., solubility increases as the pH decreases). Therefore, these metals could potentially migrate from the waste into the environment. Additionally, if these wastes are incinerated without proper air pollution control equipment, the possibility exists that lead will be released into the environment and create an air pollution problem.

4. Current disposal methods such as landfilling, land-farming, lagooning and incineration, if not properly designed and operated, can lead to the contamination of surface water and groundwater either by the overflowing of wastes or the leaching of harmful constituents from the disposal sites into the environment thereby constituting a potential substantial hazard to human health and the environment.

Profile of the Industry

Industry Structure

The petroleum refining industry is perhaps one of the most complex and technically sophisticated in the United States. There are some 250 to 300 refineries in the United States, ranging in size from about 400,000 BPD* to only a few hundred BPD. These refineries vary from a fully integrated, high-complexity plant capable of producing a complete range

*BPD = Barrels per day

of petroleum products and some petrochemicals, to very simple plants capable of producing only a very small number of products. Some refineries are modern and of recent construction, while others contain at least some operating process units constructed 40 or more years ago. The crude slates for refineries vary widely. The product mixes, and to some extent the product properties, also vary from refinery to refinery. Because of this, each refinery is characterized by a unique capacity, processing configuration, and product distribution. A survey of operating refineries in the United States between 1962 and 1972 is presented in Table 1 and the geographic distribution of these plants are shown in Figure 1.

Based on the Bureau of Mines figures for 1974, total U.S. refining capacity for 1974 was 14,486,000 BPD. As presented in Figure 2, District III* has by far the greatest capacity (6,086,000 BPD). The four other districts, arranged in decreasing order of capacity, are District II (3,950,000 BPD), District V (2,289,000 BPD), District I (1,643,000 BPD) and Distric IV (518,000 BPD). (Figure 2 indicates which states are included in each region.) In the period between 1960 and 1974, Districts II, III, and V experienced the greatest growth.

A typical breakdown of refinery capacity is shown in Table 2 and indicates that a majority (55%) of the individual plants are in the size range of 10 - 100,000 BPD

* For purposes of collecting statistics on the refining industry, the U.S. have been divided into several refining regions called Petroleum Administration for Defense (PAD) districts.

SURVEY OF OPERATING REFINERIES IN THE UNITED STATES - 1962-1972

				Charge Capacity (MMB/SD)								Production Capacity (MMB/SD)				
		Operating Refining Capacity[1]				Catalytic Cracking										
Date	Number Plants	(MMB/CD)	(MMB/SD)	Vacuum Distillation	Thermal Operation	Fresh Feed	Recycle	Catalytic Reforming	Catalytic Hydro-cracking	Catalytic Hydro-refining	Catalytic Hydro-treating	Alkyla-tion	Catalytic Polymeriza-tion*	Lube	Asphalt	Coke (MT/SD)
1/1/62	299	10.01	10.59	3.67	1.81	3.75	1.47	2.02	-	-	2.37	0.46	0.14	0.21	0.49	18.90
1/1/63	293	9.92	10.46	3.58	1.75	3.89	1.55	1.99	-	-	2.54	0.49	0.13	0.20	0.49	19.20
1/1/64	288	10.18	10.72	3.75	1.72	3.99	1.62	2.05	-	-	2.75	0.50	0.13	0.20	0.51	20.94
1/1/65	275	10.25	10.76	3.76	1.64	3.99	1.57	2.06	-	-	2.93	0.53	0.13	0.21	0.54	21.14
1/1/66	265	10.25	10.75	3.76	1.69	3.96	1.53	2.09	-	-	3.10	0.55	0.12	0.21	0.51	21.03
1/1/67	261	10.45	10.95	3.89	1.64	3.95	1.65	2.19	-	-	3.35	0.60	0.11	0.21	0.54	25.00
1/1/68	269	11.14	11.66	4.08	1.66	4.18	1.60	2.38	0.41	-	3.66	0.65	0.10	0.21	0.53	28.43
1/1/69	263	11.57	12.08	4.12	1.60	4.25	1.55	2.54	0.50	0.55	3.27	0.67	+0.25	0.20	0.57	29.43
1/1/70	262	12.15	12.65	4.55	1.64	4.37	1.49	2.78	0.60	0.54	3.51	0.75	0.29	0.21	0.58	35.49
1/1/71	253	12.68	13.28	4.74	1.56	4.51	1.46	2.89	0.73	0.54	3.81	0.78	0.31	0.22	0.60	38.77
1/1/72	247	13.09	13.71	4.85	1.53	4.57	1.26	3.17	0.84	0.63	4.26	0.82	0.29	0.22	0.62	41.47
Incremental Change																
1962-1972		3.08	3.12	1.18	(0.28)	0.82	(0.21)	1.15	0.43	0.08	1.89	0.36	-	0.01	0.13	22.57
% Crude		100.0	101.3	37.8	(9.0)	26.3	(6.7)	36.9	13.8	2.6	60.6	11.5	-	0.3	4.2	-
NPC Questionnaire & Expansion Data (MMB/CD)																
1973-1978		1.8	-	0.50	(0.18)	0.20	0.0	0.67	0.11	0.67	0.99	0.13	0.14	0.18	0.09	6.4
% Crude		100.0	-	28.0	(1.0)	11.0	0.0	37.0	6.0	37.0	55.0	7.0	8.0	1.0	5.0	-

[1] MMB - million barrels
CD - calendar day
SD - stream day

*Aromatic and isomerization reported beginning 1/1/69.

Source: Oil and Gas Journal, Annual Refining Reports (January 1, 1962 through January 1, 1972); NPC Refining Survey Questionnaire (1973 through 1978).

GEOGRAPHIC DISTRIBUTION OF REFINERIES

SOURCE: Reference 5

FIGURE 2

PETROLEUM ADMINISTRATION FOR DEFENSE (PAD) DISTRICTS

SOURCE: Reference 5

TABLE 2

SURVEY OF U.S. REFINING INDUSTRY
BY CAPACITY AND NUMBER OF PLANTS

PLANT SIZE, BPD:	10,000	10-100,000	Over 100,000
No. of plants	74	141	44
Total Refining Capacity, 1,000 BPD	348	6,032	8,465
% of Plants	28	55	17
% of Capacity	2.3	40.7	57.0

Source: The Oil and Gas Journal, Annual Refining Survey (1975).

while a majority of total capacity (57%) lies in those facilities which are greater than 100,000 BPD.

Future Trends

The number of refineries in the United States has decreased in the last few decades (see Table 1), while the average size of a refinery has increased. Few new refineries have been built in the past five years; however, changes have been made in existing refineries to reflect changing technology and product demand, largely through expansion and revamping of units of existing refineries. Although there are several new facilities in the planning stages, many such projects have been either cancelled or greatly delayed primarily because of the uncertainty caused by unresolved energy and environmental issues.

Growth in petroleum demand within the next 10 years is expected to be lower than historical growth rates, thus reducing projected waste generation rates for the industry.*

Processing Operations

A petroleum refinery is a complex combination of interdependent operations engaged in the separation of crude oil by molecular cracking, molecular rebuilding and solvent refinishing, to produce a varied list of intermediate and finished products, including light hydrocarbons, gasoline,

*Projected decrease in growth is due to a number of factors: (1) improved fuel economy for automotive engines (2) the trend among consumers to purchase smaller cars (3) slow down in jet fuel (4) rapid increase in the construction costs of petroleum refineries and (5) scarcity of capital (Reference 5).

diesel and jet fuels, light distillate fuel as well as heavy residual fuel oil. During the processing of the crude oil, a number of waste streams are generated either from the clean-up of equipment/storage tanks used in the refining process or from the treatment of wastewater generated during petroleum refining operations. The remainder of this document will discuss these particular waste streams and provide reasons for identifying these wastes as hazardous. (A detailed description of the petroleum refining process is not included in this document. However, to assist the reader in understanding some of the basic processing operations carried out in a petroleum refinery, a brief description of some of the individual operations is included as Attachment I.)

Waste Generation and Management

1. Waste Streams

The five waste streams listed as hazardous are:

- o API Separator Sludge
- o Dissolved Air Flotation (DAF) Float
- o Slop Oil Emulsion Solids
- o Heat Exchanger Bundle Cleaning Sludge
- o Tank Bottoms (Leaded)

Lead and chromium are the constituents of concern in these waste streams. Lead in the waste streams comes predominantly from the use of tetraethyl lead in the blending of leaded products. Chromium in the waste stream comes predominantly

from cooling tower blowdown that uses a chromium base corrosion inhibitor.* Concentration ranges for lead and chromium in representative samples of each waste are presented in Table 3.

API Separator Sludge - The API Separator provides for primary refinery wastewater treatment. The separators are usually connected to the oily water plant sewer. As a result, the API separator bottoms contain a mixture of all sewered waste, including tank bottoms, boiler blow-down, desalter wastes, and also traces of all chemical elements which enter the refinery process.

Oil that is present in the sludge will most likely be present in the form of heavy tars since the surface oil is skimmed periodically from the API separator. Oil content of the sludge is approximately 23% by weight while water and solids constitute approximately 53% and 24%, respectively. Most of the solids content is silt and sand, but a significant amount of heavy metals are also present in the sludge.

This waste stream is listed because it contains significant concentrations of the two heavy metals, chromium and lead. (Table 3 lists the concentration ranges of the constituents of concern in each waste stream.)

*The Agency recognizes that refineries not implementing these systems will have lower concentrations levels of these toxic metals. The delisting provisions of §261.39 are available to generators with fundamentally different waste streams to justify delisting of their wastes.

DAF Float - Some refineries utilize dissolved air flotation following primary separation in the API Separator to remove additional oil and solids. The process brings finely divided oil and solid particles to the surface where they are skimmed for disposal.

Water typically constitutes 82% by weight of this waste stream, while oil and solids constitute approximately 12.5% and 5.5% respectively. The solids are generally fine silts which did not have sufficient residence time in primary separators to settle, but the waste stream also contains the heavy metals chromium and lead, for which it is listed.

Slop Oil Emulsion Solids - The skimmings from the API separator generally consist of a three-phase mixture of oil, water and a third emulsified layer. The oil is returned to crude storage, the water discharged to the wastewater treatment system, while the emulsion (oil, water and solids) becomes a process waste stream. A typical combination of the waste stream by weight is 40% water, 43% oil and 12% solids. Among the solids are the heavy metals chromium and lead, for which the waste is listed.

Heat Exchanger Bundle Cleaning Sludge - Heat exchanger bundles are cleaned during plant shutdown to remove deposits of scale and sludge. Depending upon the characteristics of the deposits, the outside of the tube bundles may be washed, brushed, or sandblasted, while the tube insides can be wiped, brushed, or rodded out. Sludge resulting from the cleaning

TABLE 3

RANGE* IN CONCENTRATION** FOR CONSTITUENTS OF CONCERN

	<----------SOURCE---------->				
Contaminant	API Sludge	DAF	Slop Oil	Bundle Sludge	Tank Bottoms
No. of Samples	12	5	9	2	2
Chromium	.10-6,790	28-260	1-1,750	310-311	-
Lead	.25-1,290	2.3-1,250	.25-580	-	158-1,420

*Range values represent high and low concentrations for samples of each waste stream

**Concentration in mg/kg dry weight, including inert solids but excluding oil

SOURCE: Reference 1

process has approximately 53% water, 11% oil and 36% solids.

These solids are composed largely of silt precipitated from the water. The metals present are mostly corrosion products or scale deposits from the exchange bundle tubes. Chromium is present in the waste in substantial concentrations, and the waste is listed due to the presence of this constituent.

Tank Bottoms (Leaded) - The petroleum products (or fractions) after being separated in the distillation column have to be cooled before they are sent out or used for making other by-products. This is done in product storage tanks. As cooling occurs, the water separates from the hydrocarbon phase and is continually drained from the tanks to the refinery water treatment system. Solids formed as products of corrosion and rust in the tanks contain toxic heavy metals, and are periodically removed. This waste is being listed because it contains lead.

In summary, the contaminants in these wastes which caused EPA to identify these wastes as hazardous are as follows:

API Separator Sludge - chromium and lead

DAF Float - chromium and lead

Slop Oil Emulsion Solids - chromium and lead

Heat Exchanger Bundle Cleaning Sludge - chromium

Tank Bottoms (leaded) - lead

2. Waste Generation Ratio and Composition

There are a wide variety of factors which can affect the

quantity and quality of individual waste streams. Factors that affect quality include crude oil characteristics, composition of process wastewater, occurence of spills and leaks, composition of cooling water blowdown, use of corrosion inhibitors and the use of tetraethyl lead for specific products and modifications. Factors that affect both the quantity and quality of the individual waste stream include the refinery size and age, the segregation of refinery oil drains, and the actual quantity of process wastewater (Reference 2).

The constituents of concern in the individual waste streams are shown in Table 3. As this data illustrates, each waste stream varies with regard to lead and chromium concentrations, but lead and chromium are found generally in very high concentrations with some levels exceeding 1000 mg/kg dry weight.*

The estimated quantities of individual waste streams range from 600 - 33,000 metric tons per year (dry weight) (including inert solids but excluding oil). The combined total estimated quantity is 66,610 metric tons per year (dry

*The Agency is aware that these wastes generally contain very high concentrations of zinc. Zinc is one of the secondary drinking water standard parameters, with an MCL of 5 mg/l. At this time, however, the Agency does not believe that exposure to concentrations of zinc, which may leach from the waste, will result in a human health hazard, and therefore is not presently designating zinc as a constituent of concern in these waste.

weight)(including inert solids but excluding oil) based upon capacity of 14,200,000 BPCD*.

The relative quantities of waste for the individual waste components for each waste stream are shown in Table 4 and indicate that the API separator, Slop oil and DAF Float are the major waste generating streams in terms of quantity. Additionally, the data indicates that chromium and lead are present in substantial quantities in these wastes.

A second source of data, the American Petroleum Institute (API), took an extensive survey at the quantities of each waste component present in two of the waste streams from the Petroleum Process which concern the Agency.

As shown in Table 5, the API data on the API sludge and the DAF float generally supports the data found in Table 3. (It is important to recognize that the API data reflect a much larger sampling effort relative to that encompassed in the EPA survey.)

Current Disposal Practice - There are currently 4 principal methods for disposing of petroleum refinery solid wastes.

*BPD - Barrels per Calendar Day

TABLE 4

TOTAL QUANTITIES OF EACH WASTE COMPONENT

Metric Tons/Yr (Dry Weight)*,**

	API SLUDGE	DAF FLOAT	SLOP OIL	HEAT EXCHANGER SOLIDS	TANK BOTTOMS	TOTAL
Chromium	17.6	8.4	17.7	.4	--	44.2
Lead	1.2	.5	.06	--	1.1	2.9

SOURCE: Reference 1

*Excludes inert solids and oil

**Even though the quantity of heavy metals from any one waste generated at any particular petroleum refinery may be small, these wastes are normally disposed of together; therefore, the total contribution and impact of these heavy metals at any individual refinery would be substantial.

TABLE 5

RESULTS OF API SURVEY

	TOTAL WEIGHT METRIC TONS/YR		CONCENTRATION Mg/Kg	
	API	DAF	API*	DAF**
Chromium	8.6	5.3	0-10,800	0-3000
Lead	2.4	.23	0-6200	0-540

*Sample size ranges from 63-68

**Sample size ranges from 13-15

SOURCE: Reference 3

These processes include land treatment, landfilling, lagooning and incineration, and may be conducted either on-site or off-site, depending upon the particulars of a given operation.

The results from both the EPA and API studies are presented in Table 6 to provide comparisons regarding the disposal methods currently employed for refinery wastes. Land treatment and landfilling appear to be the most widely employed disposal processes with up to 75 percent of the refineries relying upon these processes for solid waste disposal.

Hazards Posed by Waste

As indicated earlier (Table 3), the five waste streams for the petroleum refining industry contain significant concentrations of the toxic heavy metals lead and chromium, with some levels exceeding 1,000 mg/kg (dry weight). Additionally, information submitted by the API for two of the waste streams (API separator sludge and DAF float) in which a water-washing step was conducted to simulate leaching (see Table 7), indicates that lead and chromium will leach from the waste in significant concentrations (between 10 and 100 x the National Interim Primary Drinking Water Standard) even when these metals are subjected to mild environmental conditions. In many cases, off-site waste disposal is implemented and these sites may be characterized by acidic environments (for instance, if they contain domestic refuse or other acidic wastes) in which case

TABLE 6

DISPOSAL METHODS FOR REFINERY WASTES[a]

Disposal Method	EPA Survey[b]		API Survey[c]	
	On-Site	Off-Site	On-Site	Off-Site
Landfill	5	14	47	36
Lagoon	3	2	15	4
Incineration	1	0	3	0
Land Treatment[d]	10	0	27	3

[a]Reported in terms of number of refineries.

[b]Nineteen refineries reported.

[c]Seventy-five refineries reported.

[d]Percent refineries using land treatment on-site plus off-site, Jacobs 10 of 19 equal 53 percent, API 30 of 75 equals 40 percent.

SOURCE: Reference 3.

TABLE 7

MEAN WASTE EXTRACT CONCENTRATIONS (WATER EXTRACTNANT) (mg/l)

Contaminant	API* Sludge	DAF** Float
Chromium (total)	1.9	3.3
Lead	2.3	2.1

*Sample size: 60-63
**Sample size: 12-15

SOURCE: Reference 3.

even more of the hazardous constituents would be released for environmental migration.

Although leaching data for the other three waste streams is not presently available, the Agency believes that the contaminants found in the waste would also tend to migrate from the waste based on the solubility of the contaminants. An additional factor supporting this belief is the fact that chromium and lead have been shown to migrate in significant concentrations from the API separator sludge and DAF float, and since the three remaining waste streams are of roughly similar composition and are generated as part of the same production process, migration patterns of these similar waste streams can be readily anticipated. Further, lead oxide, the form in which lead appears in these wastes, is soluble in moderately acidic environments (7). The solubility of chromium oxide is pH dependent and, like lead oxide, will increase as the pH decreases (8). Thus, disposal of these wastes in acidic environments is reasonably likely to result in the solubilization of dangerous concentrations of heavy metals.

Once released from the matrix of the waste, lead and chromium can migrate from the disposal site to ground and surface waters utilized as drinking water sources. Present practices associated with landfilling, land treatment or impounding the waste may be inadequate to prevent such an occurrence. While the Agency is presently unaware of all

management practices employed for these wastes, since there are a great number of generating and management sites and because wastes that are disposed of off-site out of the generator's personal supervision are particularly susceptible to mismanagement, there is a strong likelihood that some of these wastes are not properly managed in actual practice. One example of inadequate management would be improper selection of disposal sites in areas with permeable soils, permitting contaminant-bearing leachate from the waste to migrate to groundwater. This is especially significant with respect to lagoon-disposed wastes because a large quantity of liquid is available to percolate through the solids and soil beneath the fill.

An overflow problem might also be encountered if the liquid portion of the waste has been allowed to reach too high a level in a lagoon. Under these circumstances, a heavy rainfall could cause flooding which might reach surface waters in the vicinity.

In addition to difficulties caused by improper site selection, unsecure landfills are likely to have insufficient leachate control practices. There may be no leachate collection and treatment system to diminish leachate percolation through the wastes and soil underneath the site to groundwater, and there may be no surface run-off diversion system to prevent contaminants from being carried from the disposal site to

nearby ground and surface waters, thereby increasing the likelihood of drinking water contamination. Further, once lead and chromium have escaped from the disposal site, they will persist in the environment (in some form) for virtually indefinite periods, since they are elemental metals.

Additionally, if these wastes are incinerated without proper air pollution control equipment, the possibility exists that lead (a volatile heavy metal*) will be released into the environment and create an air pollution problem.

A further possibility of substantial hazard arises during transportation of these wastes to off-site disposal facilities. This increases the likelihood of their being mismanaged, and may result either in their not being properly handled during transport or in their not reaching their destination at all, thus making them available to do harm elsewhere. A transport manifest system combined with designated standards for the management of these wastes will thus greatly reduce their availability to do harm to human beings and the environment.

The Agency has determined to list these wastes as hazardous wastes on the basis of lead and chromium constituents, even though these constituents are also measurable by the characteristic of extraction procedure toxicity. Although,

*An incinerator operating to destroy organic materials operates in the range of 1000° C - 1200° C. This would cause lead to evaporate out of the equipment as fast as water would evaporate at 11° C. The temperature at which vapor pressure equals 10 mm Hg for water is 11° C and for lead is 1162° C (11).

concentrations of these constituents in an EPA extract from waste streams from individual sites might be less than 100 times the National Interim Primary Drinking Water Standards, the Agency, nevertheless, believes that there are factors in addition to metal concentrations in leachate which justify the T listing. Some of these factors already have been identified, namely the significant concentrations of chromium and lead in the five waste streams, the non-degradability of these substances, and the possibility of improper management of the wastes in actual practice.

The quantity of these wastes generated (a combined total of approximately 66,610 metric tons dry weight) is an additional supporting factor. As previously indicated, the wastes from petroleum refining industry contain significant concentrations and quantities of chromium and lead. Large amounts of these metals from the five waste streams are thus available for potential environmental release. The large quantities of these contaminants pose the danger of polluting large areas of ground or surface waters. Contamination could also occur for long periods of time, since large amounts of pollutants are available for environmental loading. Attenuative capacity of the environment surrounding the disposal facility could also be reduced or used up due to the large quantities of pollutant available. All of these considerations increase the possiblility of exposure to the harmful constituents in the wastes, and in the Agency's view, support a T listing.

Health Effects of Waste Constituents of Concern

Toxic properties of chromium and lead have been well documented. Chromium is toxic to man and lower forms of aquatic life. Lead is also poisonous in all forms. It is one of the most hazardous of the toxic metals because it accumulates in many organisms, and its deleterous effects are numerous and severe. Lead may enter the human system through inhalation, ingestion or skin contact. Improper management of these sludges may lead to ingestion of contaminated drinking water. Additional information on adverse health effects of chromium and lead can be found in Appendix A.

The hazards associated with exposure to lead and chromium have been recognized by other regulatory programs. Lead and chromium are listed as priority pollutants in accordance with §307 of the Clean Water Act of 1977. Under Section 6 of the Occupational Safety and Health Act of 1970, final standards for Occupational Exposure have been established and promulgated in 29 CFR 1910.1000 for lead and chromium. Also, a national ambient air quality standard for lead has been announced by EPA pursuant to the Clean Air Act (9). In addition, final or proposed regulations of the States of California, Maine, Massachusettes, Minnesota, Missouri, New Mexico, Oklahoma and Oregon define chromium and lead containing compounds as hazardous wastes or components thereof (10).

References

1. Jacobs Engineering Company. Assessment of Hazardous Waste Practices in the Petroleum Refining Industry. Environmental Protection Publication PB-259-097. National Technical Information Service. June 1976.

2. Jacobs Engineering Company. Alternatives for Hazardous Waste Management in the Petroleum Refining Industry. OSW Contract Number 68-01-4167 unpublished data. July 1977.

3. Engineering-Science Inc. The 1976 API Refinery Solid Waste Survey, prepared for the American Petroleum Institute. April, 1978 - 4 parts.

4. Radian Corporation. Environmental Problem Definition for Petroleum Refineries, Synthetic Natural Gas Plants and Liquified Natural Gas Plants. EPA, 68-02-1319. November, 1975.

5. A.D. Little, Inc. Environmental Considerations of Selected Energy Conserving Manufacturing Process Options. Vol. IV Petroleum Refining Industry. EPA 600/7-76/034-d. IERL, December, 1976.

6. Development Document for Effluent Limitations Guidelines and Standards for the Petroleum Industry. EPA 440/1-79/014-b. December, 1979.

7. The Merck Index. 8th Edition. 1968.

8. Pourbaix, Marcel. Atlas of Electrochemical Equilibria in Aqueous Solutions, London, Pergamon Press, 1966.

9. U.S. Department of Interior, Bureau of Mines. Mineral Commodity Summaries, 1979.

10. U.S. EPA State Regulations Files; January 1980.

11. Handbook of Chemistry and Physics, 56th ed. Cleveland: CRC Press, 1975.

Wastes from Petroleum Refining Process - Response to Comments

1. A number of commenters stated that the proposed listing "SIC 2911 API separator sludge (T,O)" should not apply to all wastes from API separators but only to waste generated from petroleum refineries*. The commenters argued that API separators are used in numerous industries and processes (i.e, the food industry, soap and detergent industry, etc.) which generate sludges of widely differing characteristics. These separators, however, do not necessarily generate a hazardous waste (i.e., the term does not automatically suggest that the sludge from any use of such a piece of equipment would be a hazardous waste). Therefore, the commenters want the listing to be either clarified to indicate that the API separator sludge is meant to be specific to separators used in the petroleum refining industry; or otherwise, want the process deleted from the hazardous waste list in Section 250.14.

- The Agency agrees with the commenters. The listing has therefore been clarified to indicate that the API separator sludge is meant to be specific to separators used in the petroleum refining industry.

*A note appeared before the listed waste in §250.14 which specified that the SIC code used in the listing was for ease of reference only. Thus, the SIC classification of the industry generating the waste would have no effect on the listing of that process waste as hazardous.

2. One commenter suggested that additional wastes from the petroleum refining industry be added to the hazardous waste list. These wastes included: (1) petroleum refining sulfur removal, (2) petroleum refining wastewater treatment sludges, (3) petroleum refining boiler cleaning, (4) petroleum refining alkylation* and (5) petroleum refining-coke from asphalt cracking. Data was submitted along with the suggested listings.

- After evaluating all the available data on the additional listed wastes, the Agency has decided not to add these wastes at the present time due to the lack of supporting data. However, the Agency will reconsider these listings at some later time once sufficient data becomes available.

3. One commenter objected to the proposed listing "SIC 2911 Petroleum refining lube oil filtration clays" due to the lack of supporting data.

- The Agency, in re-evaluating the available data, has decided to defer the listing "SIC 2911 Petroleum refining lube oil filtration clays" until additional data is collected by the Agency on which to make a decision.

*This waste was listed in the December proposal (43 FR 58959).

Attachment I

The refinery process can be categorized into the following individual operations which are displayed schematically in Figure A-1.

- o Separation
- o Treating
- o Conversion
  - o cracking
  - o combination
  - o rearrangement
- o Blending
- o Auxiliary Process
- o Storage

Separation

The individual process steps and operation in this area include:

o Topping Unit - This unit separates the crude in an atmospheric stage. The process streams from this unit normally include fuel gas, naphtha, middle distillates, and distillated fuel oil. The naphtha may be split into light and heavy fractions and the fuel oil into light, middle, and heavy distillate components.

o Vacuum Towers - Vacuum towers are utilized for separation of the heavier fractions from the entire crude stream. For a comparable crude input, these units are capable

SCHEMATIC FLOW DIAGRAM OF PETROLEUM REFINERY

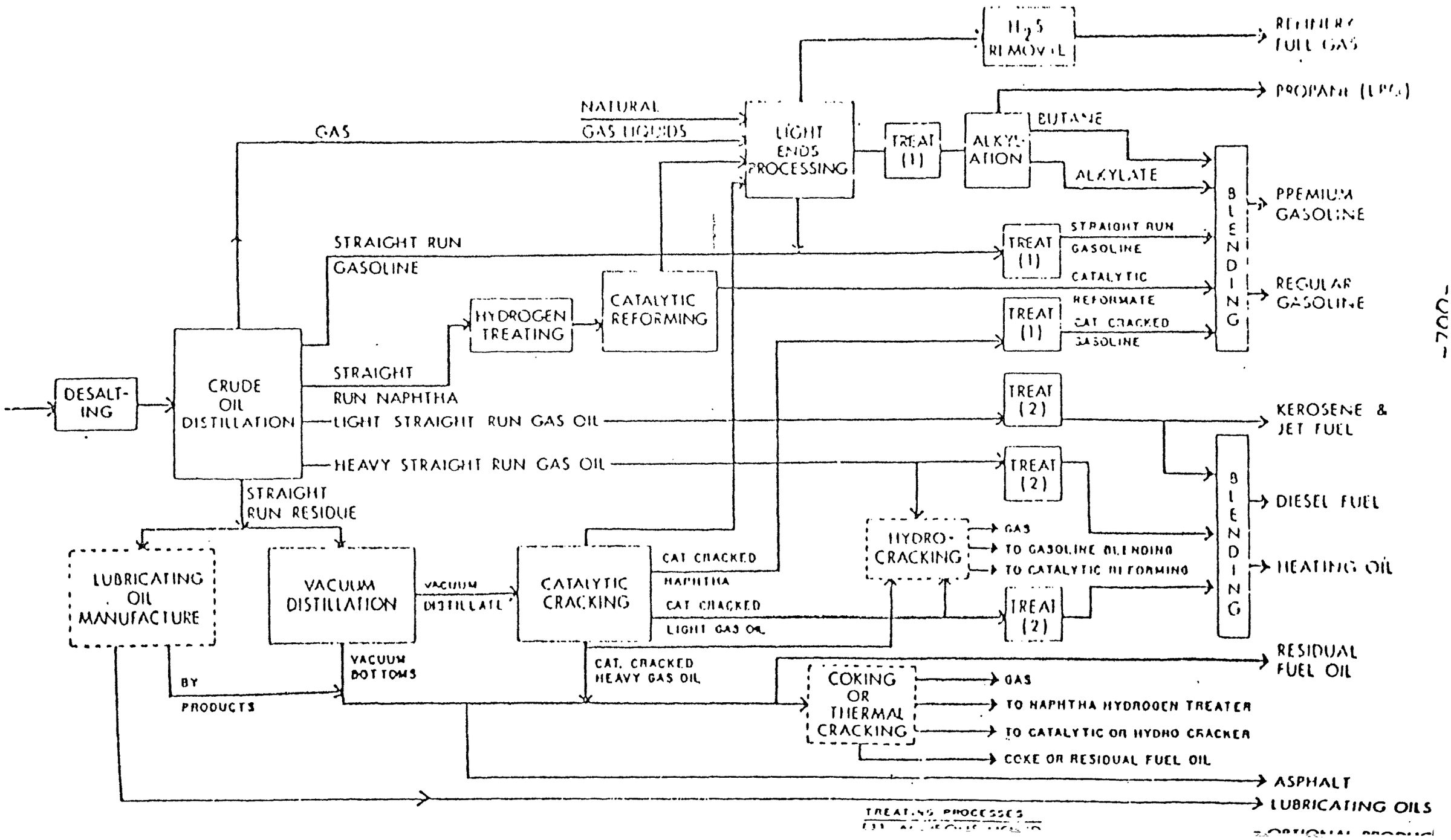

of producing a broader spectrum of process streams than a topping unit. For example, these units may either recover additional gas oil from the reduced crude while producing a heavy vacuum residual or may separate the reduced crude into special lube oil cuts with an accompanying residual stream. One of two stages may be utilized, depending upon the individual end-product requirement.

o Light Ends Recovery - This operation is sometimes referred to as vapor recovery and involves the separation of refinery gases from the crude distillation unit and other units into individual component streams. The separation phase is accomplished by absorption and/or distillation, depending upon the desired purity of the product stream.

Treating

o Gas Treating - The major component of the various species separated in the crude distillation unit or produced in the various processing units is hydrogen sulfide. Acid gases, such as H_2S, normally are removed from the light ends fraction by absorption with an aqueous regenerative solvent. There is a variety of treating processes available with the most common refinery operations based upon amine-based solvents.

o Hydrotreating - Hydrotreating involves the catalytic conversion of organic nitrogen, sulfur, and oxygen compounds into hydrocarbons and the more readily removable sulfides, ammonia, and water. Various process streams normally are

treated separately because of various fuel specifications and the wide range of catalysts and reactor conditions required to hydrotreat the various petroleum fractions.

Conversion

Conversion processes typically involve cracking, combination, and rearrangement.

o Cracking

Thermal Cracking - This is a relatively simplistic process which involves the heating of hydrocarbon fractions in the absence of catalysts. A modification to this traditional process, known as vis-breaking, is used to minimize coke formation. The moderate heating to 880°F is employed to reduce the feed viscosity and, therefore, reduce the quantity of blending stock required to upgrade the feed to fuel oil specifications. Delayed coking uses severe heating conditions (1800°F-2000°F) to crack feedstock to coke gas, distillates, and coke. Fluid coking is a recent innovation which converts the feed stream to higher valued products and produces less coke.

Hydrocracking - This process involves the cracking of feedstocks in the presence of a high hydrogen partial pressure. This process normally is employed on a high sulfur, straight-run gas or on a gas-oil effluent from another cracking process.

Catalytic Cracking - Catalytic cracking involves the application of catalytic reactions to reduce heavy oils maxi-

mizing production of light C_4 hydrocarbons and C_5 and C_6 gasoline compounds. This process is primarily employed to maximum gasoline production.

o Combination - These processes involve the combination of two light hydrocarbons through polymerization or alklation to produce a gasoline-range hydrocarbon. The polymerization process combines two or more gaseous olefins into a liquid product, while the alkylation process joins an isoparaffin and olefin. The feedstock origin is either a catalytic or hydrocracker and the catalysts include phosphoric, sulfuric, or hydrofluoric acid.

o Rearrangement - This process involves the application of catalytic reforming and isomerization to rearrange the molecular structure of a feedstock to produce a high quality stream for gasoline blending.

Catalytic reformers create high octane naphthas (rich in benzene, toluene, and xylene) from a desulfurized, straight-run, or cracked naphtha. Hydrogen also may be produced as part of the reforming operation and other end-products, including non-aromatics.

Isomerization units are used to increase the octane ratings of pentane and hexane fractions to produce a gasoline-blending stock having an octane number of 80-85. The reaction is conducted at elevated temperatures (> 300°F) and pressure (400 psig) over a chlorinated-platinum-aluminum-oxide catalyst.

Blending

The typical in-line blending operations most commonly involve the final processing of gasoline prior to storage. A variety of gasoline components, such as cracked gasoline, reformate, isomerate, alkylate, and butane, are combined with selective additives in the necessary proportions to meet marketing specifications.

Auxiliary Operations

o Crude Desalting - This process involves the separation of inorganic salts and brines from an incoming crude to prevent process fouling, corrosion, and catalyst poisoning. The desalting process can be conducted either electrically or chemically with the former being the more prevalent. In the electric process, the raw crude is heated, emulsified with water, and routed through a high-voltage vessel where the electric field demulsifies the oil and water. In the chemical version of this process, coalescing agents are applied to demulsify the two-phase aqueous-organic system.

o Hydrogen Generation - Large quantities of hydrogen are consumed in numerous refinery operations, including hydrotreating, hydrocracking, and isomerization. The proper maintenance of a hydrogen balance within the typical refinery requires that the hydrogen available from the catalytic reformers be supplemented by either stream-hydrocarbon reforming or partial oxidation. The selection of either

process depends upon the characteristics of the raw feedstock material.

o Sulfur Recovery - This process involves the application of specific processes, such as the Claus process, to convert the hydrogen sulfide content of acid gas to elemental sulfur. In this process, the hydrogen sulfide is combusted in an oxygen-deficient atmosphere to produce sulfur, sulfur dioxide, and water. Additional sulfur recovery is obtained in a series of catalytic reactors through reaction of hydrogen sulfide and sulfur dioxide. The tail gas from the Claus unit may be treated further through a variety of processes.

o Power Generation - The major factor affecting power generation in refining operations is the requirement for steam and the overall facility steam balance. Facility requirements can range from a simple back-up boiler for operations where there are significant amounts of by-product steam to other situations where continuous steam generation is necessry.

Storage Technologies

o No Storage - Raw material is not stored, but is pumped directly from an adjacent process area or petroleum refining facility where it is produced. This procedure is employed when the production in two process areas in integrated to the degree that simultaneous operations occur and no intermediate storage is necessary. Material transfer would occur by

pumping through steel or other piping from one process area directly to the other.

- Tank Storage

Fixed Roof - These cylindrical steel tanks have permanently attached conical steel roofs. The rigid construction of these tanks necessitates that the roof be installed with pressure-vacuum valves set at a few inches of water to contain minor vapor volume expansion. Greater losses of vapor resulting from tank filling should be controlled with an attached vapor recovery unit.

Floating Roof - Unlike fixed roof tanks, these tanks are equipped with a sliding roof that floats on the surface of the product and eliminates the vapor space between product and roof. A sliding seal attached to the roof seals the annular space between the roof and vessel wall from evaporation.

Internal Floating Cover - To remedy the problems of snow and rain accumulation encountered with floating roofs, this design utilizes both a fixed outer roof and an internal floating cover. Again, the floating cover is equipped with sliding seals to prevent annular space evaporation.

Variable Vapor Space - These tanks may appear in two basic designs: lifter roof and diaphragm. The lifter roof type utilizes a telescopic roof, free to travel up or down as the vapor space expands or contracts. The diaphragm design has an internal flexible diaphragm to accomodate vapor volume changes.

Pressure - These tanks are especially useful for storing highly volatile materials. These tanks come in a wide variety of shapes and are designed to eliminate vapor emissions by storing the product under pressure. These tanks may be designed for pressures up to 200 psi.

It has been noted that fixed roof, floating roof, and internal floating cover tanks are the most common varieties in use for storage of organic materials. These tanks may range in size from 20,000 to 500,000 bbl. and average 70,000 bbl.

Leather Tanning and Finishing

LISTING BACKGROUND DOCUMENT

LEATHER TANNING AND FINISHING INDUSTRY

I. LISTING OF HAZARDOUS WASTE STREAMS

1. Chrome (blue) trimmings generated by the following subcategories of the leather tanning and finishing industry: hair pulp/chrome tan/retan/wet finish; hair save/chrome tan/retan/wet finish; retan/wet finish; no beamhouse; through-the-blue; and shearlings. (T)

2. Chrome (blue) shavings generated by the following subcategories of the leather tanning and finishing industry: hair pulp/chrome tan/retan/wet finish; hair save/chrome tan/retan/wet finish; retan/wet finish; no beamhouse; through-the-blue; and shearlings. (T)

3. Buffing dust generated by the following subcategories of the leather tanning and finishing industry: hair pulp/chrome tan/retan/wet finish; hair save/chrome tan/retan/wet finish; retan/wet finish; no beamhouse; and through-the-blue. (T)

4. Sewer screenings generated by the following subcategories of the leather tanning and finishing industry: hair pulp/chrome tan/retan/wet finish; hair save/chrome tan/retan/wet finish; retan/wet finish; no beamhouse; through-the-blue; and shearlings. (T)

5. Wastewater treatment sludges generated by the following subcategories of the leather tanning and finishing industry: hair pulp/chrome tan/retan/wet finish; hair save/chrome tan/retan/wet finish; retan/wet finish; no beamhouse; through-the-blue; and shearlings. (T)

6. Wastewater treatment sludges generated by the following subcategories of the leather tanning and finishing industry: hair pulp/chrome tan/retan/wet finish; hair save/chrome tan/retan/wet finish; and through-the-blue. (T, R)*

7. Wastewater treatment sludges from the following subcategory of the leather tanning and finishing industry: hair save/non-chrome tan/retan/wet finish. (R)**

II. SUMMARY OF BASIS FOR LISTING

The first three waste streams listed above (trimmings, shavings and dusts) are a direct result of processing operations conducted within

---

* Reactive (R) listing results from the inclusion of tanneries that unhair; this process generates reactive solutions containing sulfides.

**Vegetable tanneries generate sludges which are considered reactive. Data on the metal content of these sludges is not available at this time. Therefore, these sludges are listed only as reactive.

tanneries. The four remaining waste streams (screenings and sludges) are a result of tannery wastewater treatment facility operations which have to comply with proposed categorical wastewater pretreatment standards for existing sources (PSES) which discharge to publicly-owned treatment works (POTW's), or proposed effluent limitations based upon best practicable technology (BPT) and best available technology (BAT) for plants which discharge to surface waters (44 FR 38746, July 2, 1979).

The Administrator has determined that the above listed wastes are solid wastes which pose a substantial present or potential hazard to human health or the environment when improperly transported, treated, stored, disposed of or otherwise managed, and therefore should be subject to appropriate management requirements under Subtitle C of RCRA. This conclusion is based on the following considerations:

1. These first six waste streams contain elevated concentrations and quantities of the heavy metals chromium and lead;

2. Wastewater sludges (product of the last two listed wastes) from chrome tanneries which employ unhairing operations also contain high concentrations of sulfides and sulfates which can react to form dangerously toxic hydrogen sulfide gas when subjected to an acidic environment, a condition typical to landfills;

3. Approximately 190 leather tanneries currently generate 38,500 dry metric tons (dry weight) of hazardous wastes;

4. Approximately 90 percent of the hazardous wastes listed above are disposed in landfills. If improperly managed, the potential exists for these metals to migrate from the waste in a landfill environment and to contaminate surface and groundwater supplies; this has been demonstrated when these wastes were subjected to the proposed extraction procedure and found to meet the final extraction procedure toxicity characteristic.

III. DISCUSSION

A. Industry Profile

There are approximately 190 leather tanneries which are responsible for generating the wastes of concern. Production at these facilities ranges from less than 300 to greater than 2,000 equivalent hides (1 equivalent hide = 40 ft^2) per day. Approximately 93 percent of these plants utilize chrome or chrome-tanned hides or skins in their operations. The leather tanning and finishing plants identified are located in 34 states. Approximately 30 percent of the total are located in two states: New York and Massachusetts. In general, the greatest concentration of tanneries are found in the New England area and the Middle Atlantic States with approximately 85 percent of all tanneries located east of the Mississippi River[1,2,3].

B. Manufacturing Processes

Cattlehides constitute 81 percent (by weight) of the raw material utilized by tanneries in the United States. Sheepskins and pigskins comprise 15 percent of raw material, while goatskins, calfskins, and other hide and skin types represent the remaining 4 percent of the raw material (1,2,3). The three primary processing operations involved in producing leather from cattlehides are depicted in Figure 1 and described as follows:

1. Beamhouse Operations. Beamhouse operations typically begin by trimming the perimeter areas of the hide. The hides are then washed and soaked in water to clean the hides and restore their moisture. Attached hair is removed by either a

Figure 1

PRODUCT AND SOLID WASTE FLOW FOR FULL LINE
LEATHER TANNING AND FINISHING PLANTS

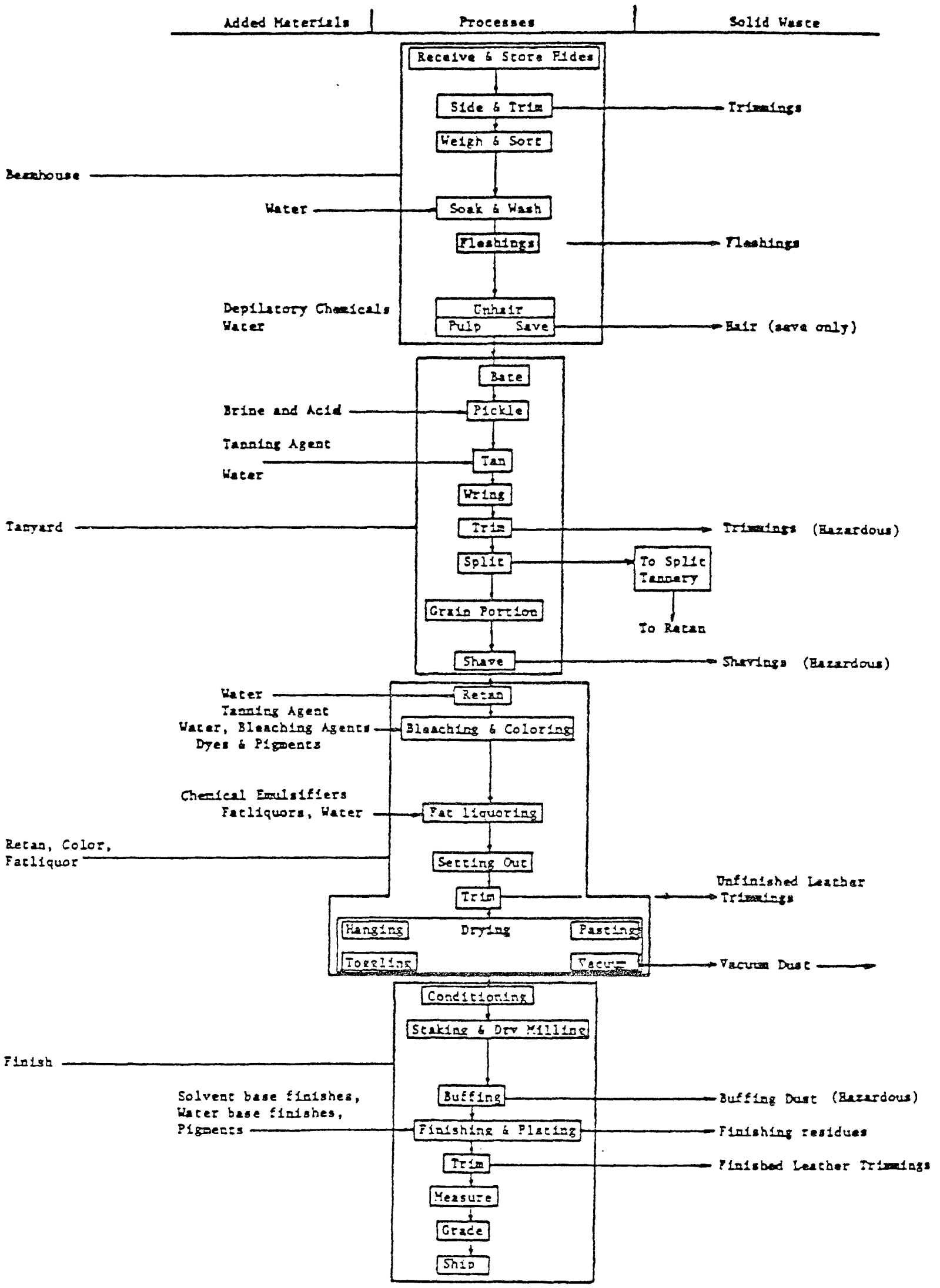

chemical dissolving process or a combination of chemical and mechanical means in an alkaline medium.

2. Tanyard Processes. Tanyard processes involve the chemical fixation in an acid medium of organic (primarily vegetable tanning) or inorganic (primarily trivalent chromium) materials to the protein structure of the hide to prevent its deterioration. Chromium tanning is the more prevalent tanning method because it results in a product which is preferred for the majority of leather uses and it requires less process time to generate a tanned product.

3. Retanning and Finishing. Retanning imparts specific characteristics to the leather which it lacks following the initial tanning step. The more commmon retanning agents are chromium, vegetable extracts, and syntans. Additional wet finishing steps include coloring by a variety of dyestuffs, and fatliquoring using primarily sulfonated oils to restore lubrication to the leather fibers. Finishing processes include a number of operations which dry, condition, smooth, and apply surface finishes to the leather according to its end use. Various finishes (primarily water-base, as well as solvent-base) provide abrasion and stain resistance, and color enhancement to the final product.

The manufacture of leather from sheepskin is similar to cattlehide tanning except beamhouse operations are typically absent. In addition, sheepskins require degreasing prior to tanning.

Shearlings (sheepskins with wool retained) require essentially the same sequence of processing steps as sheepskins but differences in individual steps are necessary.

The sequence of pigskin processing steps is essentially the same as that used for cattlehide tanning; while most skins undergo external removal of most of the hair at the slaughterhouse, additional unhairing is necessary to remove hair stubble and follicles. Degreasing is also practiced prior to the tanning of pigskins. Solvents and/or detergents are employed ot degrease the untanned skins.

C. Waste Generation

Approximately 38,500 metric tons (dry weight) of hazardous waste is currently generated by the leather tanning and finishing industry. Wastewater sludges represent the largest portion of the total at 47 percent. The breakdown of the remaining hazardous wastes is as follows: chrome trimmings and shavings, 45 percent; sewer screenings, 4.5 percent; and buffing dust, 3.5 percent. The projected hazardous waste quantities which will be generated when BPT, BAT, and pretreatment technologies are fully implemented are 43,400 and 58,000 metric tons (dry weight), respectively. The incremental difference between BAT and BPT quantities is attributed primarily to the implementation of pretreatment technology by indirect dischargers (1,2,3).

Facilities which utilize unhairing processes, chrome tanning processes, and subject chrome tanned hides to further processing are the primary generators of hazardous waste within the leather tanning and finishing industry.

The seven hazardous wastes listed above occur at various points within either the tanning process or wastewater treatment facilities. Figure 1 is a generic process flow diagram which relates the input materials and the solid wastes generated by the subprocesses of a complete ("full line") leather tanning and finishing plant. The first three listed wastes, namely the trimmings, shavings and buffing dust, are a product of the tanning processes as shown in Figure 1. Figure 2 shows the various waste sources and streams resulting from in-plant controls, preliminary wastewater treatment and end-of-pipe treatment. The general waste control and treatment scheme depicted in Figure 2 is a generic control technology diagram of the wastewater treatment methods that serve as the basis for proposed pretreatment standards of PSES and BAT effluent limitations[3]. The listed waste streams present in this system are screenings and sludges. It is noteworthy that all of the production and waste treatment methods which are responsible for the waste streams are not always used by a single facility. Hazardous waste streams are described below.

1. Chrome (Blue) Trimmings. Blue trimmings are generated prior to retanning and finishing when chrome tanned hides are hand trimmed to remove irregular pieces of hide which could disrupt the process machinery and which are not desired in the final product. Blue trimmings contain elevated concentrations of chromium (2,200 to 21,000 mg/kg - wet weight)[1] and are approximately 60 percent water by weight.

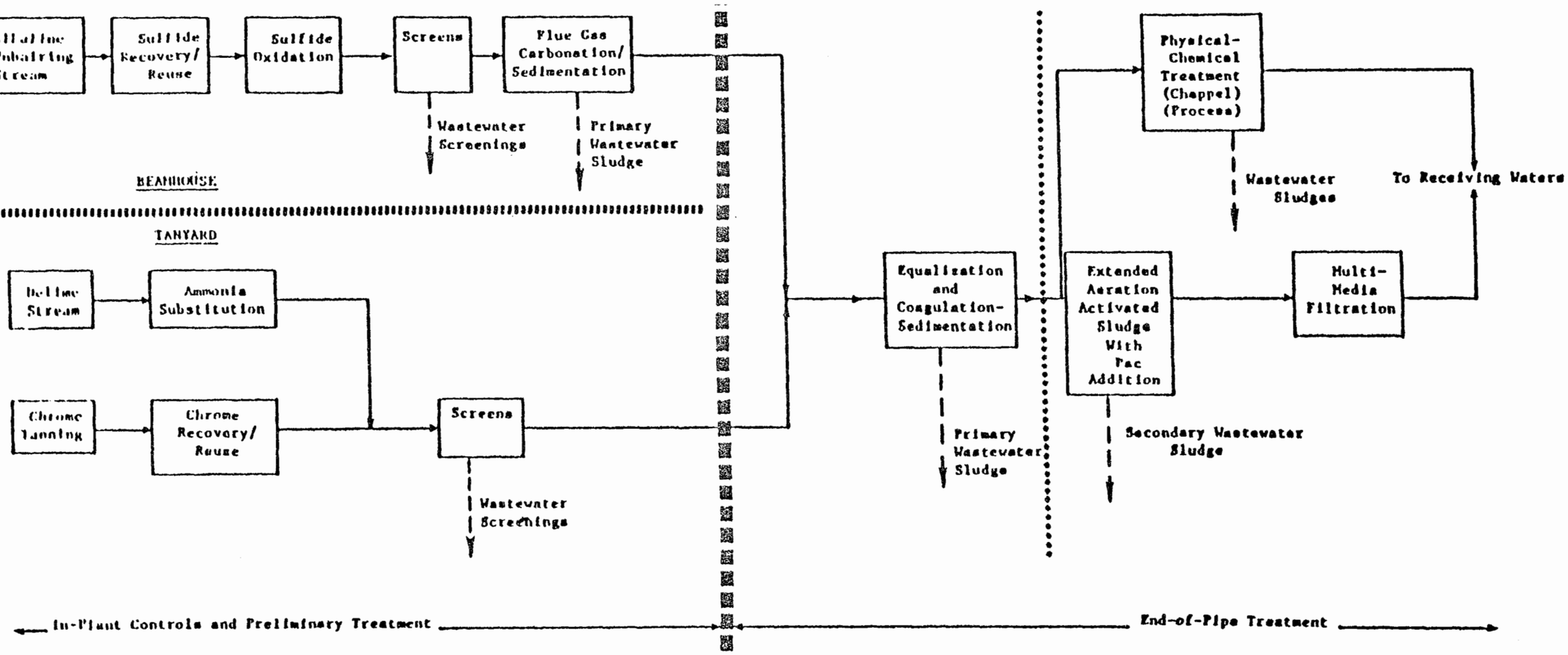

FIGURE 2

SOLID WASTE SOURCES GENERATED FROM

BAT WASTE CONTROLS, AND END-OF-PIPE TREATMENT

FOR A FULL LINE CHROME CATTLEHIDE TANNERY

2. Chrome (Blue) Shavings. Shaving adjusts the thickness of a split tanned hide or skin to generate a uniform product. This operation is accomplished mechanically and generates very small fibrous pieces of tanned hide which contain elevated concentrations of chromium (4,000 mg/kg - wet weight)[1]. Chrome shavings also contain approximately 60 percent water by weight.

3. Buffing Dust. Buffing dust is generated by mechanically sanding the leather to smooth or correct irregularities in the grain surface. Buffing dust is usually collected in a dry form utilizing cyclone collectors and baghouses, although some dust may enter the process wastewater stream. Buffing dust contains significant concentrations of chromium and lead (as high as 22,000 and 924 mg/kg - wet weight, respectively)[1]. Lead originates from lead-based pigments in the finishing operation and possibly as impurities in process chemicals. Because of the fine particle size and large surface area of the dusts, these elements are more susceptable to leaching.

4. Sewer Screenings. Coarse and fine screens remove hair particles, wool, fleshings, trimmings (raw, chrome, unfinished) and other large particulates. The chemical content of this waste is a function of the screen(s) location at the specific tannery. Significant levels of chromium and lead (as high as 14,000 and 110 mg/kg - wet weight, respectively)[1] have been found in this waste, which ranges from 10 to 50 percent solids.

5. Wastewater Sludges. Sludges generated from the treatment of process wastewaters are typically slurries of from 2 to 3 percent solids. In some instances, these sludges are dewatered to achieve from 12 to 50 percent solids prior to ultimate disposal. The three principle types of dewatering equipment are centrifuge, vacuum filter, and pressure filter such as plate and frame or belt press. Sludge drying beds are also used where on-site land is available. Heavy metals and/or sulfides have been found in these sludges.

As described above, wastewater sludges are classified as being either toxic wastes, reactive wastes, or toxic and reactive wastes. Sludges generated by tanneries which utilize the chrome tanning process and tanneries which utilize only retan-wet finishing processes have been found to be toxic (T) because of heavy metal (i.e., chromium and lead) content.

Sludges generated by tanneries which utilize the chrome tanning process and which also unhair using concentrated depilatory (sulfide containing) solutions are considered toxic and reactive because they contain, in addition to toxic chromium and lead, sulfides which, under acidic conditions, may react to release poisonous hydrogen sulfide gas. Vegetable tanneries which use depilatory solutions also generate sludges which are also reactive.

In general, cattlehides are received with the hair attached to the hide. Prior to tanning, the hair is removed. Hair removal is usually accomplished by dissolving the material using depilatory (unhairing) chemicals. Chemicals used are commonly lime and sodium sulfide or sodium sulfhydrate. Concentrated depilatory chemical solutions dis-

solve the hair within a few hours. The hair may be saved by using less concentrated chemical solutions followed by mechanical removal.

D. Waste Management

Based on a study completed prior to the adoption of the Resource Conservation and Recovery Act of 1976, approximately 25 percent of the hazardous waste generated by leather tanneries and finishers is disposed of in the open[1]. Waste dumped in the open may or may not be burned. This type of facility is relatively uncontrolled, uncovered, and little if any attempt is made to protect the environment. Approximately 60 percent of the hazardous waste is disposed of in landfills[3], with about 10 percent of the landfilled material being disposed in sanitary landfills[1].

Certified hazardous waste disposal facilities accept only 6 percent of the hazardous waste generated by tanneries.* Seven percent of the wastes are disposed in lagoons, trenches, pits, and ponds, and the remaining 2 percent is spread on the land as a soil conditioner or amendment[1].

At least three POTWs, which receive a large portion of their wastewaters from tanneries, are known to utilize incineration or a similar high temperature and pressure oxidation process to manage alkaline chromium bearing wastewater treatment sludges. It is known that the processes can either partially or completely oxidize chromium from the trivalent form to the hexavelent form[3]. Recovery of hexavalant chromium from these oxidized residues is technically feasible.

*The facilities defined in the report as "certified hazardous waste disposal facilities" do not necessarily meet the §3004 requirements such that they may or may not be permitted as hazardous waste disposal facilities without some modification.

IV. HAZARDS POSED BY THE WASTE

A. Concentrations and Quantities of Hazardous Constituents in the Waste Streams

Samples of wastes which are listed as hazardous were digested and analyzed to determine the total content of the two heavy metals present in each sample[1]. The hazardous constituents found to be present in the waste streams are listed below:

Waste Stream	No. of Samples	Hazardous Constituents	Mean Concentration (Wet Weight mg/kg)
Chrome (blue) trimmings	10	Cr	7,600
Chrome (blue) shavings	1	Cr	4,000
Buffing dust	12	Cr	5,700
		Pb	150
Sewer screenings	17	Cr	2,200
		Pb	30
Wastewater treatment residues (sludges)	27	Cr	3,700
		Pb	60

Additionally, the results of analyses of 16 sludge samples obtained from two tanneries and four POTWs (which have tanneries as the major flow contributors) are listed below(4):

CONCENTRATIONS OF CHROMIUM AND LEAD IN WASTEWATER SLUDGE SAMPLES
MEAN CONCENTRATION (mg/kg - DRY WEIGHT BASIS)

Element	T-1	T-2	POTW-1	POTW-2	POTW-3	POTW-4
Chromium	13,800	5,200	2,750	5,650	6,050	9,350
Lead	160	110	70	100	46	51

Estimates of the total quantities of these heavy metals generated in tannery wastes have been computed and are shown below:

HAZARDOUS CONSTITUENT (METRIC TONS/YEAR) (1)

Year	Chromium	Lead
1977	851	10.1
1983	1,106	12.5

Tanneries with unhairing operations also generate wastewater treatment sludges which are reactive due to their sulfide content. The waste material (sludge) removed from this process wastewater by treatment contains relatively high concentrations of sulfide and, if subjected to an acidic environment, may generate highly toxic concentrations of hydrogen sulfide gas. Concentrations of sulfide in the raw wastewater of tanneries belonging to subcategories hair pulp/chrome tan/retan/wet finish; hair save/chrome tan/retan/wet finish; hair save/non-chrome tan/retan/wet finish; and through-the-blue had mean concentration of 64, 20, 68 and 118 mg/l, respectively. Sulfide concentrations up to 680 mg/l have been reported for subcategory through-the-blue[3]. This waste thus exhibits the criteria of reactivity (see §261.33(a),(1),(v)).

Samples of wastewater treatment sludges were obtained from a POTW, with over 90 percent contribution from a tannery with unhairing operations, and analyzed to determine the constituents which can contribute to the generation of hazardous gases under reactive conditions in a disposal site. Analytical results are listed below:

	Constituent (mg/l) (12)		
Sample	Sulfide	Sulfate	Sulfite
Combined sludge	730	465	21
Secondary sludge	47	995	trace

B. Propensity for the Constituents to Migrate from the Wastes

Samples of process wastes and wastewater treatment sludges were collected by EPA during the period of December, 1979 through February, 1980 and, using the acetic acid extraction procedure (EP), the extracts were analyzed for the toxic heavy metals chromium and lead. Analytical results for sample sets from five plants are listed below.

Waste Stream	Hazardous Constituent	Number of Samples	Range and Mean of Concentrations Found in Extracts (mg/l)	
			Range	Mean
Chrome Trimmings	Cr	9	3.6 - 190	46.3
	Pb	3	0.53 - 1.17	0.78
Chrome Shavings	Cr	5	2.15 - 152	36.8
Buffing Dust	Cr	4	2.96 - 28.7	12.1
	Pb	1	3.7	--
Screenings	Cr	2	14.8 - 23.0	18.9
Wastewater Treatment Sludges	Cr	10	1.15 - 1,740	190

These data indicate that highly elevated concentrations of chromium, as well as elevated concentrations of lead, can be leached from these wastes. These constituents are orders of magnitude above the National Interum Primary Drinking Water Standard, and thus strongly indicate a potential to migrate in harmful concentrations. In fact, in most cases, extract levels would fail the toxicity characteristic and require irrevocable inclusion in the Subtitle C management system.

The Tanners' Council of America also conducted leaching tests of various chromium containing solid wastes. These tests which used distilled water as the leaching solution indicated that 200 to 400 mg of trivalent chromium is released from 1 kg of trimmings and shavings in periods ranging from 24 to 72 hours[1]. Other research has shown that chromium is relatively unaffected by most organic acids, but is solubilized slowly by acetic acid[5]. Acetic acid is a major product of anaerobic digestion processes within refuse containing landfills, comprising an estimated 30 to 60 percent of the total organic acid produced[11]. These two studies suggest that chromium could be leached out of the waste material in harmful concentrations following realistically occuring types of land disposal.

C. Possible Pathways of Exposure of Improperly Managed Waste

As previously mentioned, use of both distilled water and acetic acid extraction test data indicates that lead and chromium may leach from these waste in harmful concentrations unless the wastes are properly managed. As a result, these wastes may leach harmful concentrations of the metal constituents even under relatively mild environmental

conditions (i.e., monodisposal). If these wastes are exposed to strongly acidic disposal environments, for example disposal environments subject to acid rainfall, these acid concentrations in leachate would be higher since these metals are more soluble in acid than in distilled water. Strongly acidic conditions are also created if these wastes are co-disposed with other concentrated acid wastes or slurries resulting from the process.

Incineration or similar high termperature and pressure heat treatment and destructive oxidation technologies are known to oxidize chromium from the trivalent form to the hexavalent form[3]. Uncontrolled disposal of these sludges can lead to serious and prolonged contamination of groundwater and surface water. An alternate to disposal of these sludges is recovery of the hexavalent chromium for subsequent reduction and reuse in the tanning process. Recovery and reuse is technically feasible and is under study within the industry.

The Agency thus believes that these toxic metals may pose a threat of serious contamination to groundwater unless proper waste management is assured. These wastes do not appear to be properly managed at the present time. Present industry practice of disposing of these wastes in the open (25%) or in inadequate landfills (60%), lagoons, trenches, pits, ponds, or by landspreading is not environmentally sound. These disposal sites are relatively uncontrolled and unsupervised.

The Agency is also concerned that the lagooned wastes could

contaminate surface waters if not managed to prevent flooding or total washout.

Another pathway of concern is through airborne exposure to lead and chromium particles escaping from buffing dust. These particles could escape when the waste is piled in the open, or placed in insecure landfills.

As previously mentioned, when forms of sulfur such as sulfide and sulfate are subjected to an acid environment, they may generate highly toxic concentrations of hydrogen sulfide gas. Hydrogen sulfide gas is an irritant to the eyes and lungs in lower concentrations of exposure, and is highly toxic with inhalation in higher concentrations.

Additionally, should lead and chromium escape from the disposal site, they will persist in the environment for virtually indefinite periods, since they are elemental metals.

D. The Large Quantities of these Generated Wastes are a Further Factor Supporting a T Listing of These Wastes

The Agency has determined to list six of the waste streams from the leather tanning and finishing industry as a T hazardous waste on the basis of lead and chromium constituents, although these constituents are also measurable by the E toxicity characteristic. Moreover, in some cases, concentrations of these constituents in an EP extract from waste streams from individual sites might be less than 100 times interim primary drinking water standards although the Agency's own extraction data suggests that extract concentrations may exceed the 100x benchmark for some generators. Nevertheless, the Agency believes

that there are factors in addition to metal concentrations in leachate which justify the T listing. Some of these factors already have been identified, namely the high concentrations of lead and chromium in actual waste streams, the non-degradability of these substances, indications (including damage incidents described below) of lack of proper management of the wastes in actual practice, and the reactivity hazard for certain wastes.

The quantity of these wastes generated is an additional supporting factor. As previously indicated, the leather tanning and finishing industry waste streams are generated in very substantial quantities, and contain high concentrations of lead and chromium. (See pp. 13 and 14 above.) Large amounts of each of these metals are thus available for potential environmental release. The large quantities of these contaminants pose the danger of polluting large areas of ground and surface wastes. Contamination could also occur for long periods of time, since large amounts of pollutants are available for environmental loading. Attenuative capacity of the environment surrounding the disposal facility could also be reduced or used up due to the large quantities of pollutants available. All of these considerations increase the possibility of exposure to the harmful constituents in the wastes, and in the Agency's view, support a T listing.

E. Damage Incidents

Contamination of groundwater has been reported at two sites in Maine as a result of the uncontrolled land disposal of tannery solid wastes.

At one site, monitoring wells at two separate disposal locations were found to contain elevated chromium concentrations. A land disposal site located adjacent to a tannery had been used for several years for the disposal of beamhouse sludge, trimmings, shavings and spent tanning agent. Chromium concentrations of 0.25 and 0.084 mg/l were reported in a well approximately 700 ft from the disposal area. Wastewater treatment sludge, also containing chromium, which was disposed at a municipal landfill, has contaminated a monitoring well located 200 ft from the disposal site. Concentrations of chromium as high as 0.83 mg/l have been reported in this well(6).

At a second open land disposal site in Maine, large quantities of sludge have been received since 1973 from a primary treatment facility at a tannery. Testing of adjacent groundwater was done in 1974 after complaints from nearby property owners. Results showed traces of chromium were present in the groundwater while surface water of the adjacent property has been contaminated to an unknown extent(7).

In the Johnstown-Gloversville area of New York, plumes of contaminated groundwater have been identified adjacent to each of two landfill sites receiving wastes from a large number of tanneries in the area. While chromium has not yet been found in the groundwater, the sites have been closed due to contamination of city wells near one site and stream contamination from runoff at the other site(8).

V. HAZARD ASSOCIATED WITH LEAD, CHROMIUM, AND HYDROGEN SULFIDE

A. Hazards Associated with Lead and Chromium

The lead and chromium that may migrate from the wastes to the environment as a result of improper disposal practices are heavy metals

that persist in the environment in some form and, therefore, may contaminate drinking water sources for long periods of time. Chromium is toxic to man and lower forms of acquatic life. Lead is poisonous in all forms. It is one of the most hazardous of the toxic heavy metals because it accumulates in many organisms, and its deleterious effects are numerous and severe. Lead may enter the human system through inhalation, ingestion or skin contact. Improper management of these wastes may lead to ingestion of contaminated drinking water. Aquatic toxicity has been observed at sub-ppb levels. Additional information on the adverse health effects of chromium and lead can be found in Appendix A.

The hazards associated with lead and chromium have been recognized by other regulatory programs. Lead and chromium are listed as priority pollutants in accordance with §307 of the Clean Water Act of 1977. National Interim Primary Drinking Water Standards have been established for both parameters. Under §6 of the Occupational Safety and Health Act of 1970, a final standard for occupational exposure to lead and chromium has been established and promulgated in 19 CFR 1910.1000[8,9]. Also, a national ambient air quality standard for lead has been announced by EPA pursuant to the Clean Air Act[8]. In addition, final or proposed regulations of the states of California, Maine, Massachusetts, Minnesota, Missouri, New Mexico, Oklahoma and Oregon define chromium and lead containing compounds as hazardous wastes or components thereof[9].

B. Hazards Associated with Hydrogen Sulfide Gas

As a result of the presence of sulfide, two wastewater treatment sludges are being listed as reactive. When sulfide and sulfate are subjected to an acid environment they can react and generate hydrogen sulfide gas. Thus, present industry disposal practice, particularly in lagoons and landfills, are insufficient to prevent such an occurence. For this reason, the hazards associated with contacting hydrogen sulfide gas are presented below.

Hydrogen sulfide gas is extremely irritating to the eyes and mucus membranes and highly toxic via inhalation. Low concentration of hydrogen sulfide, in the range of 20-150 ppm, causes irritation of the eyes, while slightly higher concentrations may cause irritation of the upper respiratory tract, and if exposure is prolonged, pulmonary edema may result. With higher concentration the action of the gas on the nervous system becomes more prominent. A thirty minute exposure to 500 ppm results in headaches, dizziness, excitement, staggering, gait, diarrhea, and dysurta, followed sometimes by bronchitis or bronchopneumonia. Hydrogen sulphide asphyxiant action is due to paralysis of respiratory center.

Repeated exposures to low concentrations will result in conjunctivitis, photophobia, corneal bulge, tearing, pain and blurring vision. Exposure to high concentrations results in immediate death[10].

REFERENCES

1. Assessment of Industrial Hazardous Waste Practices - Leather Tanning and Finishing Industry. U.S. EPA, Office of Solid Waste, SCS Engineers, Inc. EPA Contract Number 68-01-3261, November 1976.
2. Economic Impact Analysis of Proposed Effluent Limitations Guidelines, New Source Performance Standards and Pretreatment Standards for the Leather Tanning and Finishing Industry, U.S. Environmental Protection Agency, Report No. 440/2-79-019, July 1979.
3. Development Document for (Proposed) Effluent Limitations Guidelines and Standards for the Leather and Finishing Point Source Category, U.S. Environmental Protection Agency, Report No. 440/1-79/016, July 1979.
4. Correspondence from Clarence L. Haile, Program Manager, Survey and Assessment, Midwest Research Institute, to Donald Anderson, Project Officer, Effluent Guidelines Division, U.S. Environmental Protection Agency. EPA Contract No. 68-01-3861, Task 7, MRI Project No. 4436-L(7), "Analytical Data for Tannery/POTW Samples". October 10, 1979.
5. Chromium, National Academy of Sciences, Washington, D.C. 1974.
6. Telephone conversation between Arthur Day (Maine, Department of Environmental Protection) and Peter Maher (Edward C. Jordan Co., Inc., Portland, Maine) on January 25, 1980.
7. Unpublished data, open file, U.S. EPA, 1979.
8. Telephone conversation between Bud Colden (New York State Dept. of Environmental Conservation, Warrensburg, NY) and Donald F. Anderson (EPA, Effluent Guidelines Div., Washington, D.C.) on March 5, 1980.

9. U.S. EPA Regulations Files, January, 1980.

10. Sax, H. Irving. Dangerous Properties of Industrial Materials. Van Norstand Reinbold Co., New York, 1979.

11. Background Document 261.24, Extraction Procedure Characteristic.

12. Correspondence from David B. Erty, E. C. Jordan Co., to Donald F. Anderson, Effluent Guidelines Div., EPA, "Hartland, Maine POTW Sludge Analysis. Leather Tanning and Finishing Industry," March 10, 1980.

Comments - Leather Tanning and Finishing Industry

- A number of commenters argued that the background document issued on January 8, 1979 which was used by EPA to support the four waste streams listed from the leather tanning and finishing industry was based on inadequate data (i.e., the only data presented in the background document was taken from a report prepared by SCS Engineers, Inc. entitled, "Assessment of Industrial Hazardous Waste Practices: Leather Tanning and Finishing Industry" to which the Tanner's Council of America has previously objected).

  Since the end of the comment period (March 16, 1979), the Agency has collected additional data (i.e., extraction data, damage cases, etc.) which support the listing and clarification of the waste streams from the leather tanning and finishing industry; therefore, the background document has been expanded to make a more compelling case. Comments will be accepted on this additional data.

- Several commenters argued that the Interim Primary Drinking Water Standard for chromium which is used in §250.13(d) of the proposed regulation to identify "toxic wastes" should distinguish between trivalent chromium and hexavalent chromium.* These commenters indicated that in a study conducted by the Oak Ridge National Laboratory (Reviews of the Environmental Effects of Pollutants III Chromium), trivalent chromium was not found to be an environmental hazard. Additionally, these commenters indicated that when EPA promulgated

*Chromium was but one of fourteen constituents used in §250.13(d) (extraction procedure) in defining a toxic waste.

the Interim Standard for chromium in 1975, it responded as follows to comments that suggested that the Interim Standard should be applied only to hexavalent chromium:

> "The limit for chromium is based on the known toxicity of the hexavalent form. Since this form is the one most likely to be found in drinking water, and since the specified analytical detection method (atomic absorption spectrophotometry) does not distinguish between the valence states, the MCL is for total chromium. If part of the chromium present is in a lower valence state, the MCL provides the additional margin for safety."

These same commenters pointed out that in Appendix II to §3004 of the proposed rules (43 FR 59019), hexavalent chromium was cited as the parameter used in the EPA Interim Primary Drinking Water Standards. Thus, these commenters suggested that the definition of toxic wastes in §250.13(d) should apply only to wastes which contain hexavalent chromium.

The Agency does not disagree with the commenters with respect to the toxicity and environmental hazards posed by trivalent chromium. However, the Agency has evidence which indicates that trivalent chromium will oxidize to hexavalent chromium under certain conditions (such as destructive oxidation of alkaline sludges noted in the background document) which could then pose a serious hazard both to human health or the environment (see the EP toxicity characteristic

background document for a more detailed discussion). With respect to Appendix II to the §3004 regulations, the Agency has corrected this inconsistency in the final regulations.

A number of commenters argued that the chromium found in the waste sludge was in such an insoluble form that it would not migrate out of the waste to present an environmental problem. Monitoring data was provided by several commenters to support their argument.

The Agency disagrees with the commenters contention. The monitoring data provided in the comment letters already indicates that groundwater contamination has occured. For example, at the segregated landfill in Michigan, which one commenter included as an example in his comments, the concentration of total chromium found in the groundwater at just 50 feet from the site was 0.10, 0.14, 0.17 and 0.20 mg/l, all above the drinking water standard and indicating groundwater contamination (the drinking water standard for total chromium is 0.05 mg/l). At further distances from the site the level of chromium was lower (<0.04 mg/l), however, the Agency's concern is that the chromium will move as a slug (i.e., no dilution) and eventually contaminate groundwater at greater distances from the landfill. Additionally, as demonstrated in the background document, two disposal sites in the Johnstown-Gloversville area in New York, known to have accepted large quantities of tannery wastes have been closed due to contamination of city wells near one site and stream contamination from run-off at the other. Therefore, the Agency believes that there is sufficient probability that the contaminants in the tannery

the Interim Standard for chromium in 1975, it responded as follows to comments that suggested that the Interim Standard should be applied only to hexavalent chromium:

> "The limit for chromium is based on the known toxicity of the hexavalent form. Since this form is the one most likely to be found in drinking water, and since the specified analytical detection method (atomic absorption spectrophotometry) does not distinguish between the valence states, the MCL is for total chromium. If part of the chromium present is in a lower valence state, the MCL provides the additional margin for safety."

These same commenters pointed out that in Appendix II to §3004 of the proposed rules (43 FR 59019), hexavalent chromium was cited as the parameter used in the EPA Interim Primary Drinking Water Standards. Thus, these commenters suggested that the definition of toxic wastes in §250.13(d) should apply only to wastes which contain hexavalent chromium.

The Agency does not disagree with the commenters with respect to the toxicity and environmental hazards posed by trivalent chromium. However, the Agency has evidence which indicates that trivalent chromium will oxidize to hexavalent chromium under certain conditions (such as destructive oxidation of alkaline sludges noted in the background document) which could then pose a serious hazard both to human health or the environment (see the EP toxicity characteristic

background document for a more detailed discussion). With respect to Appendix II to the §3004 regulations, the Agency has corrected this inconsistency in the final regulations.

- A number of commenters argued that the chromium found in the waste sludge was in such an insoluble form that it would not migrate out of the waste to present an environmental problem. Monitoring data was provided by several commenters to support their argument.

The Agency disagrees with the commenters contention. The monitoring data provided in the comment letters already indicates that groundwater contamination has occured. For example, at the segregated landfill in Michigan, which one commenter included as an example in his comments, the concentration of total chromium found in the groundwater at just 50 feet from the site was 0.10, 0.14, 0.17 and 0.20 mg/l, all above the drinking water standard and indicating groundwater contamination (the drinking water standard for total chromium is 0.05 mg/l). At further distances from the site the level of chromium was lower (<0.04 mg/l), however, the Agency's concern is that the chromium will move as a slug (i.e., no dilution) and eventually contaminate groundwater at greater distances from the landfill. Additionally, as demonstrated in the background document, two disposal sites in the Johnstown-Gloversville area in New York, known to have accepted large quantities of tannery wastes have been closed due to contamination of city wells near one site and stream contamination from run-off at the other. Therefore, the Agency believes that there is sufficient probability that the contaminants in the tannery

waste, especially chromium, will migrate out and escape into the environment so as to present a potential hazard to human health or the environment.

Several commenters objected to the Agency's listing of the four tannery waste streams for lead. These commenters argued that the background document magnified the industries use of lead. These commenters pointed out that tanneries do not use lead compounds in the wet work processes including the beamhouse, the tanning department, and the retan/color/lubrication processes; small quantities of insoluble pigments containing lead are used in the finishing department of certain tanners. The commenters went on to say that the use of lead in the leather tanning and finishing industry has declined in recent years due to restrictions on the use of these pigments, due to leather style changes and due to industry volume decline resulting from the import/export situation in the hide, leather and leather products industry.

As presented in the Leather Tanning and Finishing Industry Listing Background Document, lead has been found present in the buffing dust, sewer screenings, and two listed wastewater treatment sludges (sludges listed separately because some contain sulfides and are therefore listed as reactive). The designated subcategories that produce these waste streams are as follows: hair pulp/chrome tan/retan/wet finish; hair save/chrome-tan/retan/wet finish; retan/wet finish; no beamhouse; through-the-blue; and shearlings (only sewer screenings and wastewater sludges include this subcatagory).

Clearly, the subcategory "hair save/ non-chrome tan/ retan/wet finish" is not included as one of the processes used by an industry that produces these lead contaminated wastes. It is noteworthy, in response to a particular claim made in an industry comment, that the subcategory "no beamhouse" is properly included because facilities using this process would generate lead-contaminated wastes.

From the data presenting the concentrations of lead and chromium in the four wastestreams, the Agency is aware that lead appears in concentrations considerably less than that of chromiuim. But, a consideration of the data from the acetic extraction procedure (EP) performed by the Agency in December 1979 through April 1980, will reveal the leachability of the inorganic compounds (namely, lead and chromium) found in the wastestreams. Lead, as well as chromium, was found to leach from the waste in noteworthy concentrations (i.e., 75 times the NIPDWS for lead). Therefore, harmful concentrations of these heavy metals may leach from the waste unless these wastes are properly managed. As a result, if these wastes are exposed to more acidic disposal environments, for example disposal sites where other strongly acid industrial wastes are disposed, or environments subject to acid rainfall, these metals' concentrations in leachate would be higher, since these metals are more soluble in acid than distilled water. The quantity of waste lead generated annually, and the indications of actual waste mismanagement by the industry

further support listing on this basis. Therefore, lead constitutes a potential health hazard as a constituent which is present in these improperly managed wastes, and the Agency believes, should be managed as such.

Iron and Steel Industry

COKING

Ammonia Still Lime Sludge (T)

I. Summary of Basis for Listing

Ammonia still lime sludge is generated when by-products are recovered from coke oven gases. The Administrator has determined that ammonia still lime sludge may pose a present or potential hazard to human health or the environment when improperly transported, treated, stored, disposed of or otherwise managed, and therefore should be subject to appropriate management requirements under Subtitle C of RCRA. This conclusion is based on the following considerations:

1. These sludges contain the hazardous constituents cyanide, naphthalene, phenolic compounds, and arsenic which adhere to the lime flocs and solids in significant concentrations.

2. Cyanide and phenol leached in significant concentrations from an ammonia still lime sludge waste sample which was tested by a distilled water extraction procedure. Although no leachate data is currently available for naphthalene and arsenic, the Agency strongly believes that based on constituent solubilities, the high concentration of these constituents in the wastes, and the physical nature of the waste, these two constituents are likely to leach from the wastes in harmful concentrations when the wastes are improperly managed.

3. It is estimated that a very large quantity, 963,000 tons (1), of ammonia still lime sludge (5% solids by weight) is currently generated annually, and that this quantity will gradually increase to 1.45 million tons (5% solids by weight) per year as the remaining coke plants add fixed ammonia removal capability to comply with BPT limitations (1). There is thus the likelihood of large-scale contamination of the environment if these wastes are not managed properly.

4. Coke plant operators generally dispose of these sludges on-site in unlined sludge lagoons or in unsecured landfill operations. These management methods may be in-

adequate to impede leachate migration*.

II. Industry Profile and Process Description

The stripping of ammonia during the by-product cokemaking process is currently practiced at 39 facilities, distributed across 17 different states, with about half of the operating plants located in Pennslyvania, Ohio and Alabama (1). These plants are currently producing 45,000,000 tons of coke per year (1). (Coke, the residue from the destructive distillation of coal, serves both as a fuel and as a reducing agent in the making of iron and steel.) Of the 39 plants which practice ammonia recovery, 31 use lime, generating, in the process, an ammonia still lime sludge.**

During the recovery of chemical by-products from the cokemaking process, excess ammonia liquor is passed through stills to strip the NH_3 from solution for recovery as ammonium sulfate, phosphate or hydroxide. About half of the ammonia originally present (5,000 mg/l) strips readily, but the remaining fraction can only be recovered by elevating the pH

---

*Although no data on the corrosivity of ammonia still lime sludge are currently available, the Agency believes that these sludges may have a pH greater than 12.5 and may, therefore, be corrosive. Under §§261.22 and 262.11, generators of this waste stream are responsible for testing their waste in order to determine whether their waste is corrosive.

**Eight plants currently use sodium hydroxide as their alkali and produce about 1/5 of the sludge volumes common to lime systems (1). These eight plants tend to be smaller in capacity, with lesser volumes of process wastewater to treat. The Agency believes that this sludge will be similar in composition to the ammonia still lime sludge, and plans on collecting additional data to determine whether this waste should also be listed.

of the waste liquor to 10-12 through the addition of lime, and passing additional steam through the solution. This stripping transfers some of the contaminants to the gas stream, but enough remains behind for the lime sludges to contain high levels of hazardous constituents (i.e., cyanide, naphthalene, phenol and arsenic; see page 6, following).

II. Waste Generation and Management

Ammonia still lime sludge is generated in the recovery of ammonia, by the addition of lime, from coke manufacturing operations. Currently it is estimated that 963,000 tons of ammonia still lime sludges (5% solids by weight) are generated annually, and this amount will gradually increase to about 1.45 million tons per year as the remaining coke plants add fixed ammonia removal capabilities to comply with BPT limitations (1). Based on process wastewater analytical data at 9 coke-making plants, an estimated industry total of 1,468 tons (dry weight) of cyanide, naphthalene, phenolic compounds, and arsenic result each year from ammonia still lime sludges (1).

Cyanide, naphthalene, phenol and other organic constituents are formed as a result of the destructive distillation of coal and are present in the ammonia liquor. Arsenic, on the other hand, is present along with other naturally occuring metallic contaminants in the coal and is also present in the ammonia liquor. (Although other metals are present in the waste, only arsenic is deemed present in sufficient concen-

trations to present a problem (1).)

Review of the chemical mechanisms, pH and operating temperatures at which the ammonia stripping process is conducted indicates that cyanide, naphthalene, phenol and arsenic tend to remain relatively chemically unreactive in the ammonia still stripping process. As a result, the presence of these four pollutants in the ammonia still lime sludge is predictable.

Sludges are typically settled out in sedimentation basins, from which settled material is periodically removed for disposal (1). Figure 1 presents a process schematic of the ammonia still recovery process.

Current Disposal Practices

Of the 39 ammonia recovery operations, approximately 30 plants presently dispose of the ammonia still lime sludges in on-site unlined sludge ponds.[1] Lined lagoons or carefully controlled landfills have not been routinely used by the industry to dispose of these sludges (1).

Hazardous Properties of the Waste

Using data collected by EPA at coking operations from the process wastewater samples taken before and after the addition of lime[1], an accounting of the differences in pollutant mass before and after the lime addition reveals that 13,640 ppm of cyanide, 4,770 ppm naphthalene, 680 ppm of phenols*, and 1,086

*The mass of phenolic compounds present in the sludge is estimated and has been adjusted for partial volatilization of the phenol in the stripper.

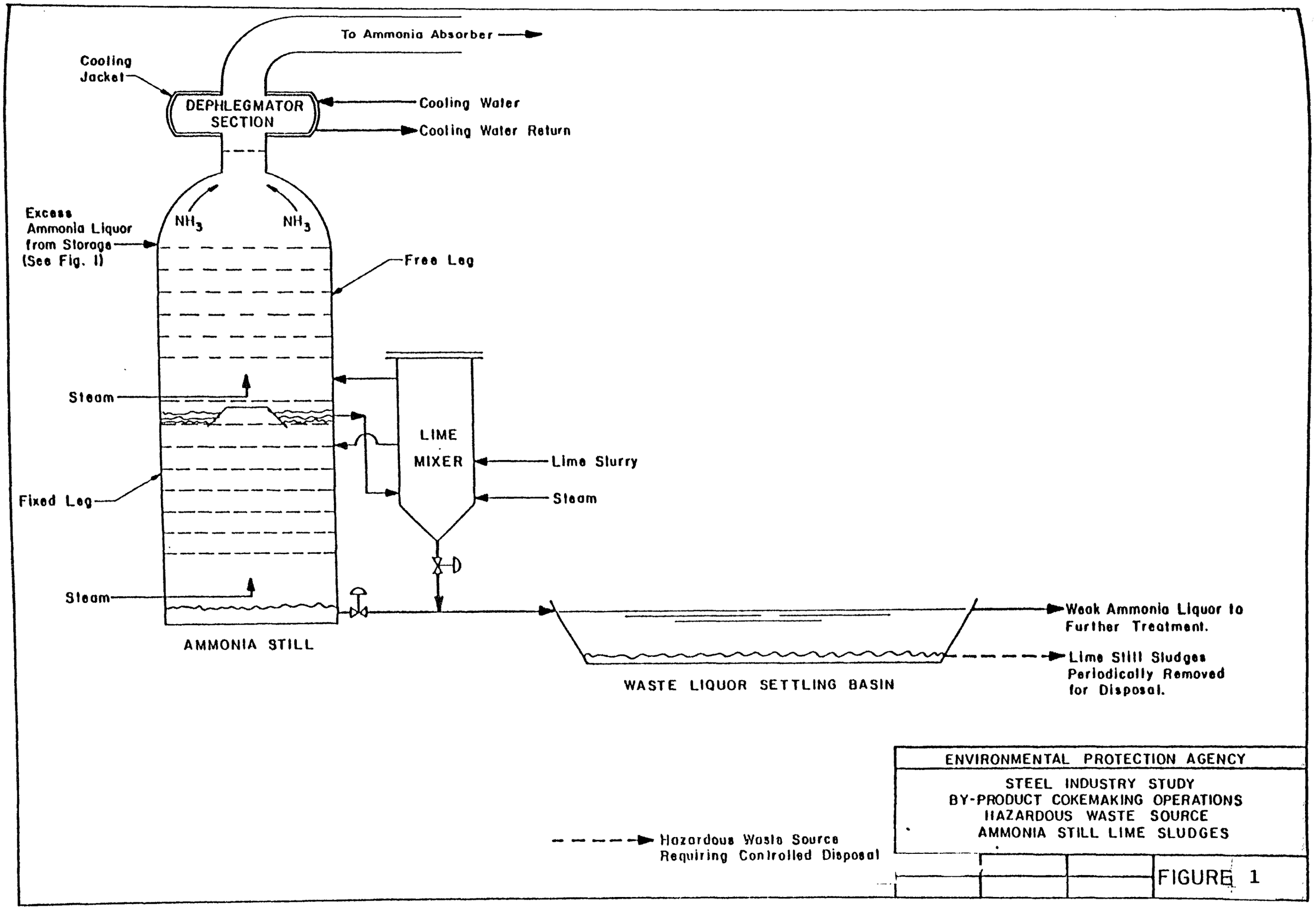
To Ammonia Absorber
Cooling Jacket
DEPHLEGMATOR SECTION
Cooling Water
Cooling Water Return
Excess Ammonia Liquor from Storage (See Fig. 1)
NH_3
NH_3
Free Leg
Steam
LIME MIXER
Lime Slurry
Steam
Fixed Leg
Steam
AMMONIA STILL
WASTE LIQUOR SETTLING BASIN
Weak Ammonia Liquor to Further Treatment.
Lime Still Sludges Periodically Removed for Disposal.
Hazardous Waste Source Requiring Controlled Disposal
ENVIRONMENTAL PROTECTION AGENCY
STEEL INDUSTRY STUDY
BY-PRODUCT COKEMAKING OPERATIONS
HAZARDOUS WASTE SOURCE
AMMONIA STILL LIME SLUDGES
FIGURE 1

ppm of arsenic are present in the ammonia still lime sludge.*

A separate study of ammonia still lime sludge indicated phenol and cyanide concentrations ranging from 670 ppm to 1910 ppm for phenol and 343 ppm to 1940 ppm for cyanide (2).

Leaching tests (distilled water) were also performed on this waste sample. Results of these test revealed leachate concentrations of 198 ppm for cyanide and 20 ppm for phenol (2).

The concentration of cyanide in the leachate is far in excess of concentrations in water considered harmful to human health and the environment. For example, the U.S. Public Health Service's recommended standard for cyanide in drinking water is 0.2 mg/l. The proposed EPA Water Quality Criteria limits the level of cyanide at 0.2 mg/l and phenol at 1 ppm for domestic water supply.**

Although no leachate data is currently available for naphthalene and arsenic, the Agency strongly believes that these constituents will leach in harmful concentrations from these wastes if not properly managed. Some compounds of arsenic are quite soluble. Arsenic trioxide has a solubility of 12,000 mg/l at 0°C, and arsenic pentoxide has a solubility of 2,300 g/l at 20°C (Appendix A). The solubility, the high concentrations

*These concentration figures are not contained in reference 1 but are calculated using data contained in that reference.
**The Agency is not using these standards as quantitative benchmarks, but is citing them to give some indication that very low concentrations of these contaminants may give rise to a substantial hazard.

of arsenic in the ammonia still lime sludge and arsenic's extreme toxicity make it likely that it will leach from the wastes in harmful concentrations (i.e., a small quantity of arsenic is sufficient to present a problem to human health and the environment) if the wastes are not properly managed. Naphthalene is water soluble, with solubility ranging from 30,000 μg/l to 40,000 μg/l. The solubility of naphthalene in water and its presence in such high concentrations in the waste make it likely that it will leach from the wastes in harmful concentrations if the wastes are not properly managed.

In addition, cyanide, phenol, naphthalene and arsenic tend to remain chemically unreactive in the ammonia still lime sludge. Since lime is a relatively porous substance, constituents in the lime sludge will themselves therefore tend to be released when the waste sludge is exposed to a leaching medium.

As previously discussed, a very large quantity of ammonia still lime sludge is produced annually, and is thus available for large scale contamination of the environment. Such large quantities of waste likewise present the danger of continued migration of and exposure to waste constituents. These wastes consequently present a serious hazard to human beings if not properly managed.

Current practices of disposing of these wastes in fact appear inadequate. Disposal of ammonia still lime sludge in unlined sludge lagoons or unsecured landfills (see p. 4 above)

makes it likely that the hazardous constituents in the wastes will leach out and migrate into the environment, possibly contaminating drinking water sources.

An overflow problem might also be encountered if the liquid portion of the waste has been allowed to reach too high a level in the lagoon; a heavy rainfall could cause flooding which might result in the contamination of surface waters in the vicinity. Given the large quantities of this waste produced, other types of mismanagement are likely to result and to cause damage to the environment.

As demonstrated above, the waste constituents appear capable of migrating from the waste in harmful concentrations. The waste constituents are also persistent, and thus have an increased likelihood of reaching an environmental receptor. Arsenic, as an element will persist indefinitely in some form. Cyanides also tend to persist after migration (see background document "Spent or Waste Cyanide Solutions and Sludges" for further information supporting this conclusion). Cyanide and phenols have been implicated in actual damage incidents as well, again confirming the ability of these waste constituents to be mobile, persist, and cause substantial harm. For example,

> A firm in Houston, Texas, as early as 1968, was made aware that its practices of discharging such hazardous wastes as cyanide, phenols, sulfides, and ammonia into the Houston Ship Channel was creating a severe environmental hazard. The toxic wastes in question were derived from the cleaning of blast furnaces from coke plants. According to expert testimony, levels as low as 0.05 mg/l of cyanide effluent are lethal to shrimp and small fish. The court ordered the firm to cease discharging these wastes into the ship channel. (EPA open files)

In 1971 a newly drilled industrial well in an artesian aquifer in Garfield, New Jersey, contained water with an unacceptably high concentration of phenolic materials. The pollutants originated from nearby industrial waste lagoons. (Draft Environmental Impact Statement, January, 1979).

Fifteen thousand drums of toxic and corrosive metal industrial wastes were dumped on farmland in Illinois in 1972. As a result, large numbers of cattle died from cyanide poisoning and nearby surface water was contaminated by runoff. (House Report Number 94-1491, 94th Congress, 2nd Session, page 19).

Health and Ecological Effects

Cyanide

Congress listed cyanide as a priority pollutant under §307(a) of the Clean Water Act.

The toxicity of cyanide has been well documented. Cyanide in its most toxic form can be fatal to humans in a few minutes at a concentration of 300 ppm. Cyanide is also lethal to freshwater fish at concentrations as low as about 50 mg/l and has been shown to adversely affect invertebrates and fish at concentrations of about 10 mg/l.

The hazards associated with exposure to cyanide have also been recognized by other regulatory programs. The U.S. Public Health Service established a drinking water standard of 0.2 mg/l as an acceptable level for water supplies. The Occupational Safety and Health Administration (OSHA) has established a permissible exposure limit for KCN and NaCN at 5 mg/m^3 as an eight-hour time-weighted average.

Finally, final or proposed regulations of the states of California, Maine, Maryland, Massacusetts, Minnesota, Missouri,

New Mexico, Oklahoma, and Oregon define cyanide containing compounds as hazardous wastes or components thereof. Additional information and specific references on the adverse health effects of cyanide can be found in Appendix A.

Phenol

Congress designated phenol a priority pollutant under §307(a) of the Clean Water Act. Phenol is readily absorbed by all routes. It is rapidly distributed to mammalian tissues. This is illustrated by the fact that acutely toxic doses of phenol can produce symptoms within minutes of administration regardless of the route of entry. Repeated exposures to phenol at high concentrations have resulted in chronic liver damage in humans.(3) Chronic poisoning, following prolonged exposures to low concentrations of the vapor or mist, results in digestive disturbances (vomiting, difficulty in swollowing, excessive salivtion, diarrehea), nervous disorders (headache, fainting, dizziness, mental disturbances), and skin eruptions.(4) Chronic poisoning may terminate fatally in some cases where there has been extensive damage to the kidneys or liver.

Phenol biodegrades at a moderate rate in surface water and soil, but moves readily. Even with persistence of only a few days, the rapid spreading of phenol could cause widespread damage of the ecosystem and contamination of potable water supplies.

OSHA has set a TLV for phenol at 5 ppm.

Phenol is listed in Sax's Dangerous Properties of Industrial Materials as a dangerous disaster hazard because

when heated it emits toxic fumes. Additional information and specific references on the adverse effects of phenol can be found in Appendix A.

Arsenic

Congress has designated arsenic as a priority pollutant under Section 307(a) of the Clean Water Act.

Arsenic is extremely toxic in humans and animals. Death in humans has occurred following ingestion of very small amounts (5mg/kg) of this chemical. Several epidemiological studies have associated cancers with occupational expoure to arsenic, including those of the lung, lymphatics and blood. Certain cases involving a high prevalence of skin cancer have been associated with arsenic in drinking water, while liver cancer has developed in several cases following ingestion of arsenic. Results from the administration of arsenic in drinking water or by injection in animals supports the carcinogenic potential of arsenic.

Occupational exposure to arsenic has resulted in chromosomal damage, while several different arsenic compounds have demonstrated positive mutagenic effects in laboratory studies.

The teratogenicity of arsenic and arsenic compounds is well established and includes defects of the skull, brain, gonads, eyes, ribs and genito-urinary system.

The effects of chronic arsenic exposure include skin diseases progressing to gangrene, liver damage, neurological

disturbances, red blood cell production, and cardiovascular disease.

OSHA has set a standard air TWA of 500 mg/m^3 for arsenic. DOT requires a "poision" warning label.

The Office of Toxic Substances under FIFRA has issued a pre-RPAR for arsenic. The Carcinogen Assessment Group has evaluated arsenic and has determined that it exhibits substantial evidence of carcinogenicity. The Office of Drinking Water has regulated arsenic under the Safe Drinking Water Act due to its toxicity and the Office of Air Quality Planning and Standards has begun a pre-regulatory assessment of arsenic based on its suspected carcinogenic effects. The Office of Water Planning and Standards under Section 304(a) of the Clean Water Act has begun development of a regulation based on health effects other than on oncogenicity and environmental effects. Finally, the Office of Toxic Substances has completed Phase I assessment of arsenic under TSCA. Additional information and specific references on the adverse effects of arsenic can be found in Appendix A.

Naphthalene

Naphthalene is designated a priority pollutant under Section 307(a) of the CWA.

Systemic reaction to acute exposure to naphthalene includes nausea, headache, diaphoresis, hematuria, fever, anemia, liver damage, convulsions and coma. Industrial exposure to naphthalene appears to cause increased incidence of cataracts. Also, hemolytic anemia with associated

jaundice and occassionally renal disease from precipitated hemoglobin has been described in newborn infants, children, and adults after exposure to naphthalene by ingestion, inhalation, or possibly by skin contact.

OSHA's standard for exposure to vapor for a time-weighted industrial exposure is 50 mg/m^3.

Sax[10] warns that naphthalene is an experimental neoplastic substance via the subcutaneous route; that is, it causes formation of non-metastasizing abnormal or new growth(s). Additional information and specific references on the adverse effects of naphthalene can be found in Appendix A.

References

1. Draft Development Document for Proposed Effluent Limitations Guidelines and Standards for the Iron and Steel Manufacturing Point Source Category; By-Product Cokemaking Subcategory. Volume II, October 1979.

2. Calspan Corporation. Assessment of Industrial Hazardous Waste Practices in the Metal Smelting and Refining Industry. Appendices. April 1977. Contract Number 68-01-2604, Volume III, pages 97-144. App. 12, 37.

3. Merliss, R.R. Phenol Moras., Mus. Jour., Occup. Med., 14:55. 1972.

4. Sax, N. Irving, Dangerous Properties of Industrial Materials, Fifth edition, Van Nostrand Reinhold Co., 1979

LISTING BACKGROUND DOCUMENT

ELECTRIC FURNACE PRODUCTION OF STEEL

Emission control dusts/sludges from the electric furnace production of steel*(T)

Summary of Basis for Listing

Emission control dusts/sludges from the production of steel in electric furnaces are generated when particulate matter in the gases given off by electric furnaces during the production process is removed by air pollution control equipment. Dry collection methods generate a dust; wet collection methods generate a sludge. The Administrator has determined that these dusts/sludges are solid wastes which may pose a present or potential hazard to human health and the environment when improperly transported, treated, stored, disposed of or otherwise managed and therefore should be subject to appropriate management requirements under Subtitle C of RCRA. This conclusion is based on the following considerations:

(1) The emission control dusts/sludges contain significant concentrations of the toxic heavy metals chromium, lead, and cadmium.

(2) Lead, chromium and cadmium have been shown to leach in harmful concentrations from waste samples subjected to both a distilled water extraction procedure and the extraction procedure described in §250.13(d) of the proposed Subtitle C regulations.

*The listing description has been changed in response to a comment submitted by the American Iron and Steel Institute that the previous listing was incorrect. The electric furnace process is used for steelmaking only, not iron and steelmaking, as was previously listed.

(3) A large quantity of these wastes (a combined total of approximately 337,000 metric tons) is generated annually and is available for disposal. There is thus a likelihood of large scale contamination of the environment if these wastes are mismanaged.

(4) The wastes typically are disposed of by being dumped in the open, either on-site or off-site, thus posing a realistic possibility of migration of lead, cadmium, and chromium to underground drinking water sources. These metals persist virtually indefinitely, presenting the serious threat of long-term contamination.

(5) Off-site disposal of these wastes will increase the risk of mismanagement during transport.

I. Profile of the Industry

The electric furnace (arc) process is one of the three principal methods of producing steel in the United States. In 1974, the iron and steel industry had the capacity to produce approximately 27,000,000 metric tons/year of steel via the electric furnace process (1).

Plants are located in 31 different states, with 70% of the estimated capacity located in Ohio, Pennsylvania, Illinois, Texas, Michigan and Indiana (1). A typical integrated electric furnace steel plant has an electric furnace capacity of about 500,000 metric tons/yr (1). Capacities at different plants range from about 50,000 to 2,000,000 metric tons/yr (2).

II. Manufacturing Process

The raw materials for the electric arc steelmaking process include cold iron and steel scrap and fluxes, such as limestone and/or fluorspar. The raw materials are charged into a refractory-lined cylindrical furnace and melted by

passing an electric current (arcing) through the scrap steel by means of three triangularly spaced carbon electrodes inserted through the furnace roof. As the process proceeds, the electrodes are consumed at a rate of about 5 to 8 kg/kkg of steel, with the emission of CO and CO_2 gases. The hot gases entrain finely divided particulate, 70% of which (by weight) is below 5 microns in size, the majority of this being less than 0.5 microns. The particulate fume or dust consists primarily of iron oxides, silica and lime, with significant concentrations of the toxic metals lead, chromium and cadmium (1).

III. Waste Generation

The particulate produced during the electric furnace steelmaking process is removed from the furnace off-gases by means of baghouse filters, electrostatic precipitators, or high-energy Venturi scrubbers. The baghouse filters and electrostatic precipitators, which are used by 93% of electric arc steelmaking furnaces, produce an emission control (dry) dust for disposal at a rate of 12.8 kg of dust per metric ton of steel produced. Scrubbers, used by the remaining 7% of the steelmaking industry, produce slurries or sludges for disposal at a rate of about 8.7 kg (dry solids basis) per metric ton of steel produced.

Based on an electric furnace steelmaking capacity of 27,000,000 metric tons/yr (see p. 2 above), and assuming that the electric furnaces that use dry air pollution control

equipment represent 93% of that capacity, the industry-wide estimated quantities of emission control dusts and sludges produced at full operating capacity are 321,000 metric tons/yr, and 16,000 metric tons/yr (dry solids basis), respectively.

The Agency has information indicating that these wastes are typically dumped in the open at on-site or off-site disposal facilities (1,2). The emission control sludges, however, are also amenable to other forms of disposal, such as disposal in lagoons or surface impoundments. The large quantities of these wastes generated annually, combined with the fact that other emission control dusts/sludges generators handle their wastes in this manner, make this type of management situation plausible. (See, for example, Secondary Lead Hazardous Waste Listing Background Document).

IV. Hazardous Properties of the Wastes

1. Migrating Potential of Waste Constituents

An analysis of the electric furnace dust supplied by U.S. Steel Corporation is given in Table 1 (3). As the data indicate, two of the toxic heavy metal of concern, lead and chromium, are present in significant concentrations. Lead, for example, which has a usual range of lead-in-soil concentrations of 2 to 200 ppm (4), is present in this waste sample at a concentration of 1,400 ppm.*

*The absence of cadmium from the waste sample described in Table 1 may be attributable to the fact that 29% of the constituents (by weight) of the waste sample are not accounted for, or the fact that the composition of electric furnace dust can vary considerably depending on the type and quantity of cold scrap used to charge the furnace. Cadmium is a demonstrated waste constituent as evidenced by its presence in significant concentrations in the leachate tests on electric furnace dusts shown in Table 2 below.

Another analysis of waste samples from both electric furnace dusts and sludges also shows lead and chromium to be present in the wastes in significant amounts. The analysis of the emission control dust waste sample revealed chromium to be present at 1380 ppm and lead to be present at 24,220 ppm. The analysis of the emission control sludge revealed chromium to be present in the waste at 2,690 ppm and lead at 7,900 ppm (1).

The presence of such high concentrations of lead and chromium in this waste stream, in and of itself, raises regulatory concerns. Furthermore, the Agency has data (see table 2, p. 8) from the proposed EPA Extraction Procedures (Samples 1-4) and an industry-conducted water extraction (Sample 5) which show that lead, chromium and cadmium may leach from electric furnace dusts in significant concentrations. All of the waste extracts--either by the EPA EP which uses acetic acid as its leaching solution, or by the industry test which uses distilled water--contain contaminants in concentrations which are either equal to or, for the most part, exceed EPA's National Interim Primary Drinking Water Standards, in some instances by several orders of magnitude. The distilled water extraction shown in Sample 5 of Table 2 indicates that these wastes may leach harmful concentrations of lead, cadmium, and chromium even under relatively mild conditions.

Table 1

Composition of an Electric Furnace Dust*

Parameter	Weight % (not intended to total 100%)
Fe (total)	35.34
MnO	8.29
SiO_2	5.61
Al_2O_3	0.62
CaO	12.01
Cr_2O_3	2.69
CuO	0.12
Ni	0.59
Pb	0.14
Zn	0.39
F	5.09
Total	70.89

Source: Reference 3

*Although the data in Table 1 is presented for the electric furnace dusts collected by baghouse filters or electric precipitators and not for the sludges produced by Venturi scrubbers, the solids composition of the sludges produced by scrubbers can be assumed to be virtually the same as that of the electric furnace dusts since both wet and dry air pollution systems entrain the same heavy metal particulate.

This conclusion is further supported by different solubility tests done on electric furnace emission control dust waste samples, also using water as the leaching medium (1). In this test, lead was again found to leach at dangerous concentrations like 150 ppm. Another water solubility test done on an electric furnace sludge waste sample likewise showed chromium and lead to leach from the sludge in significant concentrations of 94 ppm and 2.0 ppm, respectively (1).

If these wastes are exposed to more acidic environments (landfills or disposal environments subject to acid rainfall) these metals' concentrations in leachate would likely be higher, since lead, cadmium, and chromium (and their oxides) are more soluble in acid than in distilled water (5,6,7).

Many of the states in which the majority of these wastes are generated, including Ohio, Pennsylvania, Illinois and Indiana, are known to experience acid rainfall (8).

A further indication of the migratory potential of the waste constituents is the physical form of the waste itself. These waste dusts/sludges are of a fine particulate composition, thereby exposing a large surface area to any percolating medium, and increasing the probability for leaching of hazardous constituents from the waste to groundwater.

2. Substantial Hazard from Waste Mismanagement

In light of the demonstrated migratory potential of harmful concentrations of the waste constituents, improper management of these wastes could easily result in the

Table 2.

Contaminant	National Interim Primary Drinking Water Standard	Leach Test Results (mg/l) on Electric Furnace Emission Du: Sample 1*	Sample 2*	Sample 3*	Sample 4*	Sample 5**	Sam 6***
Cd	0.01	0.05	2.84	3.85	4.8-13.4	3.5	-
Cr	0.05	<0.1	0.48	-	0.05	1,248.0	120
Pb	0.05	0.5	0.06	36.7	<0.2	0.3	

*EP extraction data submitted by an American Iron and Steel Institute letter to John P. Lehman from Earle F. Young, Jr., dated May 15, 1979.

**Waste Characterization Data for the State of Pennsylvania, Department of Environmental Resources. The data for Sample 5 was supplied by Allegheny Ludlum Steel Corporation from a water extraction procedure. The apparent discrepancy between the result obtained for chromium in Sample 5 and those obtained for chromium in Samples 1-4 may be attributable to the particular type and quantity of scrap metal used in the steelmaking processes which produced these waste samples.

***Source: Reference 3 water extraction.

release of contaminants. For instance, selection of disposal sites in areas with permeable soils can permit contaminant-bearing leachate from the waste to migrate to surface water and/or groundwater. The possibility of groundwater contamination is especially significant with respect to disposal of these wastes in surface impoundments, since a large quantity of liquid is available to percolate through the solids and soil beneath the fill.

An overflow problem might also be encountered if these wastes are ponded and the liquid portion of the waste has been allowed to reach too high a level in the lagoon; a heavy rainfall could cause flooding which might result in the contamination of soils and surface waters in the vicinity.

In addition to difficulties caused by improper site selection, unsecure landfills in which dusts and dredged solids could be disposed of are likely to have insufficient leachate control practices. There may be no leachate collection and treatment system to diminish leachate percolation through the wastes and soil underneath the site to groundwater and there may not be a surface run-off diversion system to prevent contaminants from being carried from the disposal site to nearby surface waters.

In addition to ground and surface water contamination, airborne exposure to lead, chromium, or cadmium particulate escaping from mismanaged emission control dusts is another pathway of concern. These minute particles could be dispersed

by wind if waste dusts are piled in the open, placed in insecure landfills or improperly handled during transportation. As a result, the health of persons who inhale the airborne particulates would be jeopardized.

Transportation of these wastes to off-site disposal facilities increases the likelihood of their causing harm to human beings and the environment. The mismanagement of these wastes during transportation may thus result in an additional hazard. Furthermore, absent of proper management safeguards, the wastes might not reach the designated destination at all, thus making them available to do harm elsewhere.

The lead, chromium and cadmium that may migrate from the waste to the environment as a result of such improper disposal practices are elemental heavy metals that persist indefinitely in the environment in some form. Therefore, contaminants migrating from these wastes may pollute the environment for long periods of time.

3. Justification for T Listing

The Agency has determined to list emission control dusts/sludges from the electric furnace production of steel as a T hazardous waste on the basis of lead, chromium and cadmium constituents, although these constituents are also measurable by the E toxicity characteristic. Although concentrations of these constituents in an EP extract from waste streams from particular sites may not always be greater than 100 times the National Interim Primary Drinking Water Standards,

the Agency believes that there are factors in addition to metal concentrations in leachate which justify the T listing. Some of these factors have already been identified, namely the high concentrations of cadmium, chromium and lead in the actual waste and in distilled water leachate samples, the non-degradability of these substances, and the strong possibility of the lack of proper management of the wastes in actual practices.

The quantity of these wastes generated is an additional supporting factor. As indicated above, electric furnace emission control dusts/sludges are generated in very substantial quantities, and contain high concentrations of the heavy toxic metals lead, chromium and cadmium. Large amounts of each of these metals are available for environmental release. The large quantities of these contaminants pose the danger of polluting large areas of ground or surface waters. Contamination could also occur for long periods of time, since large amounts of pollutants are available for environmental loading. Attenuative capacity of the environment surrounding the disposal facility could also be reduced or used up due to the large quantities of pollutant available. All of these considerations increase the possibility of exposure to the harmful constituents in the wastes, and in the Agency's view, support a T listing.

V. <u>Hazards Associated with Lead, Chromium, and Cadmium</u>

Lead is poisonous in all forms. It is one of the most

hazardous of the toxic metals because it accumulates in many organisms, and its deleterious effects are numerous and severe. Lead may enter the human system through inhalation, ingestion or skin contact. Chromium is toxic to man and lower forms of aquatic life. Cadmium is also a cumulative poison, essentially irreversible in effect. Excessive intake leads to kidney damage, and inhalation of dusts also damages the lungs. Additional information on the adverse health effects of lead, chromium, and cadmium can be found in Appendix A.

The hazards associated with exposure to lead, chromium, and cadmium have been recognized by other regulatory programs. Lead, chromium and cadmium are listed as priority pollutants in accordance with §307(a) of the Clean Water Act of 1977. Under §6 of the Occupational Safety and Health Act of 1970, a final standard for occupational exposure to lead has been established and a draft technical standard for chromium has been developed (9, 10). Also, a national ambient air quality standard for lead has been announced by EPA pursuant to the Clean Air Act (9). In addition, final or proposed regulations of the State of California, Maine, Massachusetts, Minnesota, Missouri, New Mexico, Oklahoma and Oregon define chromium and lead containing compounds as hazardous wastes or components thereof (11).

EPA has proposed regulations that will limit the amount of cadmium in municipal sludge which can be landspread on cropland (12). The Occupational Safety and Health Administration (OSHA) has issued an advance notice of proposed rulemaking

for cadmium air exposure based on a recommendation by the National Institute for Occupational Safety (13). EPA has also prohibited the ocean dumping of cadmium and cadmium compounds except when present as trace contaminants (14). EPA has also promulgated pretreatment standards for electroplaters which specifically limit discharges of cadmium to Public Owned Treatment Works (15).

References

1. Calspan Report, "Assessment of Industrial Hazardous Waste Practices in the Metal Smelting and Refining Industry, "Volume III, April 1977.

2. Development Document for Proposed Effluent Limitations Guidelines and Standards for the Iron and Steel Manufacturing Point Source Category, Vol. V., EPA 440/1-79/024a, October 1979.

3. Waste Characterization Data form the State of Pennsylvania Department of Environmental Resources; letter from P.Y. Masciantonio to T. Orlando, dated September 8, 1975.

4. U.S. Environmental Protection Agency, Quality Criteria for Water, Washington, D.C., 1976.

5. Handbook of Chemistry and Physics, 52nd Edition. Cleveland, The Chemical Rubber Company, 1971-72.

6. The Merck Index. 8th Edition. 1968.

7. Pourbaix, Marcel. Atlas of Electrochemical Equlibria in Aqueous Solutions, London, Pergamon Press, 1966.

8. MITRE Corporation, "An Integrated Five-Year Research Plan (FY 79-83) for EPA's Atmospheric Acid Deposition Program". (Draft)

9. U.S. Department of Interior, Bureau of Mines. Mineral Commodity Summaries, 1979.

10. U.S. Department of Health, Education and Welfare, National Institute for Occupational Safety and Health. Registry of Toxic Effects of Chemical Substances. 1977.

11. U.S. EPA States Regulations Files, January 1980.

12. 44 FR 53449

13. 42 FR 5434

14. 38 FR 28610

15. Federal Register Vol. 44 No. 175 Friday, September 7, 1979 (40 CFR Part 413).

LISTING BACKGROUND DOCUMENT

Steel Finishing

Spent Pickle Liquor (C) (T)

Sludge from Lime Treatment of Spent Pickle Liquor (T)

I. Summary of Basis for Listing:

Spent pickle liquor and the sludge resulting from lime treatment of spent pickle liquor are generated, respectively, in the pickling of iron and steel to remove surface scale, and in the lime neutralization of spent pickling liquors. The Administrator has determined that both the spent pickle liquor and the sludge from the lime treatment of spent pickle liquor are solid wastes which may pose a present or potential hazard to human health and the environment when improperly transported, treated, stored, disposed of, or otherwise managed, and, therefore, should be subject to appropriate management requirements under Subtitle C of RCRA. This conclusion is based on the following considerations:

1. Spent pickle liquor is corrosive (has been shown to have pH less than 2), and contains significant concentrations of the toxic heavy metals lead and chromium.

2. The toxic heavy metals in spent pickle liquor are present in highly mobile form, since it is an acidic solution. Therefore, these hazardous constituents are readily available to migrate from the waste in harmful concentrations, causing harm to the environment.

3. The sludge resulting from the lime treatment of the spent pickle liquors has been shown to contain significant concentrations of the heavy toxic metals lead and chromium.

4. These toxic metals have been shown to leach in significant concentrations from a sample of the lime treatment sludge subjected to an extraction procedure. Thus, the possibility of groundwater contamination via leaching exists if these waste materials are improperly disposed.

5. Current waste management practices, which consist primarily of land disposal either in unlined landfills or unlined lagoons, may well be inadequate to prevent the migration of lead and chromium to underground drinking sources.

6. A very large quantity (approximately 1.4 billion gallons of spent pickle liquor or, if all spent pickle liquor is treated, 5 million metric tons of lime treatment sludge (at 5% solids)) is generated annually. There thus is greater likelihood of large-scale contamination of the environment if these wastes are not managed properly.

7. Damage incidents have been reported that are attributable to the improper disposal of untreated spent pickle liquor and the sludges resulting from the lime treatment of the spent pickle liquors.

II. Industry Profile and Process Description

Pickling operations are very widespread across the United States. Spent pickle liquor is generated at 240 plants located in 34 states. Approximately 70% of these plants are situated in Pennsylvania, Ohio, Illinois, Indiana and Michigan. Pickling capacity within the iron and steel industry, according to the type of acid used, is shown in Table 1 below.(1)

The pickling operation involves the immersion of oxidized steel in a heated solution of concentrated acid or acids (the pickling agent) to remove surface oxidation or to impart specific surface characteristics. At integrated steel plants, acid pickle liquors are used in cold rolling mills and galvanizing mills

Table 1

Pickling Agent	Number of Plants*	Annual Capacity, tons of steel/yr
HCl	43	30,000,000
H_2SO_4	149	28,000,000
Mixed acid (e.g. $HF-HNO_3$)	152	6,000,000

Depending on the type of steel being processed, or the type of surface quality desired, different types of acids may be used. After a certain concentration of metallic ions build up in the pickling bath, the solution is considered spent or exhausted and must be replaced.

III. Waste Generation and Management

Approximately 1.4 billion gallons of spent pickle liquor are generated annually: 500 million gallons of spent sulfuric acid, 800 million gallons of spent hydrochloric acid, and 74 million gallons of a combination (mixed) of pickling acids.** When treated with lime, spent pickle liquors form a spent pickle liquor lime treatment sludge, the second waste of concern in this document.

*If the same plant uses two or three pickling agents, it is listed once for each agent used.

**Estimates based on waste generation data contained in Reference 1.

Approximately 40% of the mills utilizing the sulfuric acid pickling process discharge these and other pickling wastes after treatment to a receiving body of water. Another 45% of these mills have the spent pickle liquor hauled off-site by private contractors, presumably for subsequent treatment. The remaining 15% of the sulfuric acid pickling mills either utilize deep well disposal, engage in acid recovery, or discharge the treated waste to Publicly Owned Treatment Works (POTWs) along with other pickling wastes which have undergone varying degrees of treatment. Disposal practices of combination acid pickling mills and hydrochloric acid pickling mills are known to be similar to those used by sulfuric acid pickling mills.(1)

Lime treatment neutralization of spent pickle liquors, shown in diagram 1, results in the formation of a mixed metal hydroxide sludge. On-site lime neutralization by mills involves the addition of lime, either in the hydroxide or the carbonate form, to the pickling wastes (spent pickle liquor, wastewaters, etc.) in a mixing tank followed by sedimentation or filtration.(1)

The total quantity of wet sludge (5% solids) generated annually from the treatment of spent pickle liquors has been estimated at approximately 5 million metric tons per year.*

*Estimates based on waste generation data contained in Reference 1.

This quantity includes sludges from combined treatment of all spent pickle liquors together with other aqueous waste streams from the pickling operations. This sludge is usually disposed of in unlined land disposal facilities.(1) Outside contract disposal services generally neutralize spent pickle liquors in unlined lagoons.(2)

IV. Hazardous Properties of the Wastes

1. Spent Pickle Liquor

The pickling process requires highly acidic solutions; hence, spent pickle liquors are highly corrosive, with a pH of less than 2 (see Table 2). Therefore, this waste would meet the corrosivity characteristic (§261.22) and is thus defined as hazardous. In addition, Agency data indicate that significant levels of the toxic heavy metals lead and chromium, in a highly mobile form, are found in the spent pickle liquor (see Table 2 below).

Table 2

Typical Concentratons of Lead and Chromium in Spent Pickle Liquors(mg/l)

Parameter	H_2SO_4 Bath	HCL Bath	Mixed Acid Bath
pH	1.0-2.0	1.0-4.5	1.3-1.5
Cr	26-269	2-37	3300-4250
Pb	ND*-2	2-1550	1-4

*ND=Nondetectable

Source: Reference 1

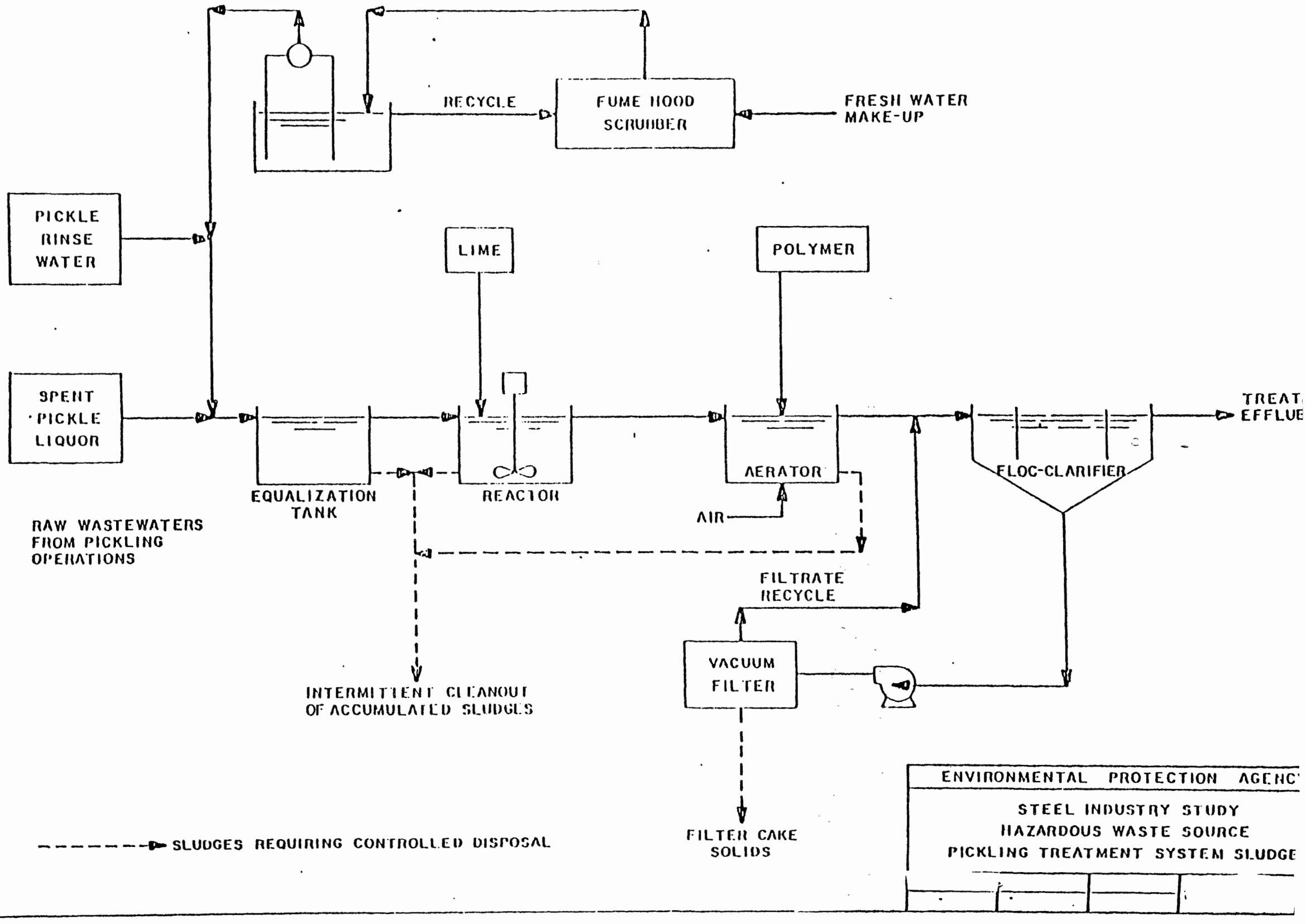
RECYCLE
FUME HOOD SCRUBBER
FRESH WATER MAKE-UP
PICKLE RINSE WATER
LIME
POLYMER
SPENT PICKLE LIQUOR
EQUALIZATION TANK
REACTOR
AERATOR
AIR
FLOC-CLARIFIER
TREAT
EFFLUE
RAW WASTEWATERS FROM PICKLING OPERATIONS
FILTRATE RECYCLE
VACUUM FILTER
INTERMITTENT CLEANOUT OF ACCUMULATED SLUDGES
FILTER CAKE SOLIDS
SLUDGES REQUIRING CONTROLLED DISPOSAL
ENVIRONMENTAL PROTECTION AGENC
STEEL INDUSTRY STUDY
HAZARDOUS WASTE SOURCE
PICKLING TREATMENT SYSTEM SLUDGE

Based on the higher concentration levels listed in Table 2 for chromium and lead (4250 and 1550, respectively), if only .12% of the chromium and .33% of the lead leach from the spent pickle liquor, this amount would exceed the permissible concentrations in the EP extract.* Since the spent pickle liquor is a highly acidic solution, these toxic heavy metals are readily available to migrate into the environment, as they are more soluble in acidic environments.(6) Thus, disposal of this waste in landfills or lagoons, if improperly managed, is likely to lead to the migration of harmful constituents into the environment and pose a substantial hazard via a groundwater exposure pathway.

2. Sludge from Lime Treatment of Spent Pickle Liquor

Calculations based on data collected by EPA at 45 plants(1) - taking into account the difference in pollutant mass before and after treatment of the spent pickle liquor - estimate that, on the average, 22,400 ppm of chromium and 11,380 ppm of lead are present in the lime treatment sludge.** Furthermore, lead and chromium have been shown to leach from the sludge resulting from lime treatment of spent pickle liquor in significant concentrations when subjected to an

*The concentrations of lead and chromium in these wastes can vary, depending upon the composition of the raw materials used to manufacture the steel and the particular type of steel pickled.

**The sludge, since it is a more concentrated waste form (i.e., the ratio of liquid to solids in the sludge is less than the liquid/solid ratio in the spent pickle liquor) will have a higher concentration of the contaminants of concern than the spent pickle liquor. The above calculations are not contained in reference 1, but are based on data contained in reference 1.

extraction procedure.[5] Results of an analysis of the leachate (pH and test conditions unspecified) from a neutralized pickling liquor sludge are shown in Table 3 below. These data clearly indicate that lead and chromium may leach from the waste in harmful concentrations unless properly managed since they are many times greater than the National Interim Primary Drinking Water Standards for these substances.

Table 3
Analysis of Leachate from a Neutralized Spent Pickle Liquor Sludge

Metal	Leachate Concentration (ppm)
Cr	429.0
Pb	8.2

Source: Reference 5

3. Possible Types of Improper Management and Available Pathways of Exposure

As shown above, disposal of spent pickling liquors and the sludge resulting from lime treatment of spent pickling liquors on land creates the potential for leaching of the

toxic heavy metals chromium and lead to groundwater, a common source of drinking water. In addition, improper storage and/or disposal of spent pickling liquor poses potential hazards stemming from the high acidity of the wastes. In particular, if not segregated in a landfill, spent pickle liquors can extract and solubilize toxic contaminants (especially heavy metals) from other wastes disposed in the landfill. If not stored in special containers, pickle liquors can, over time, corrode the containers, resulting in leakage and potential acid burns to individuals who may come in contact with the waste.

Transportation of about 45% of the spent pickle liquors generated to off-site disposal facilities before neutralization (see p.4, above) increases the likelihood of their causing harm to people and the environment. Improper containment of these wastes may result in their doing harm to individuals or to the environment during transportation to their designated destination. Moreover, mismanagement of these wastes during transportation may result in their not reaching their designated destination at all, thus making them available to do harm elsewhere.

Solubility of lead and chromium present in lime treatment sludges is pH dependent (e.g. solubility increases as pH decreases).[6] Thus, co-disposal of the

sludges with waste acids, for instance, is likely to result in increased solubilization of these heavy metals. Disposal in a surface impoundment or landfill with an acidic environment will certainly enhance the solubility of lead and chromium hydroxide. The result of the leachate test shown in Table 3[5] strongly suggests that lead and chromium may be released from lime treated sludges as well.

Once released from the matrix of the waste, lead and chromium can migrate from the disposal site to ground and surface waters used as or constituting potential drinking water sources. Present practices associated with landfilling or impounding the waste may be inadequate to prevent such an occurence. For instance, selection of disposal sites in areas with permeable soils can permit contaminant-bearing leachate from the waste to migrate to groundwater.

An over-flow problem might also be encountered if the liquid portion of the waste has been allowed to reach too high a level in the lagoon. Thus, a heavy rainfall could cause flooding which might reach surface waters in the vicinity.

In addition to difficulties caused by improper site selection, unsecure landfills in which wastes may be disposed of are likely to have insufficient leachate

control practices. Available information, in fact, indicates that liners are not presently used in the landfilling or lagooning of these wastes.(1) There may be no leachate collection and treatment system to diminish leachate percolation through the wastes and soil underneath the site to groundwater and there may be no surface run-off diversion system to prevent contaminants from being carried from the disposal site to nearby surface waters.

An additional regulatory concern is the huge quantities of these wastes generated annually. Spent pickle liquor and the sludge resulting from lime treatment of the spent pickle liquor are generated in very large quantities. The large quantities of these wastes and the contaminants they contain pose a serious danger of polluting large areas of ground or surface waters. Contamination could also occur for long periods of time since large amounts of pollutants are available for environmental loading. Attenuative capacity of the environment surrounding the disposal facility could also be reduced or used up due to the large quantities of pollutants available.

V. <u>Hazards Associated with Lead and Chromium</u>

The lead and chromium that may migrate from the wastes to the envirnoment as a result of such improper disposal

practices are heavy metals that persist in the environment in some form and, therefore, may contaminate drinking water sources for long periods of time. Chromium is toxic to man and lower forms of acquatic life. Lead is poisonous in all forms. It is one of the most hazardous of the toxic heavy metals because it accumulates in many organisms, and its deleterous effects are numerous and severe. Lead may enter the human system through inhalation, ingestion or skin contact. Improper management of these wastes may lead to ingestion of contaminated drinking water. Aquatic toxicity has been observed at sub-ppb levels. Additional infromation on the adverse health effects of chromium and lead can be fround in Apprendix A.

The hazards associated with lead and chromium have been recognized by other regulatory programs. Lead and chromium are listed as priority pollutants in accordance with §307(a) of the Clean Water Act of 1977. National Interim Primary Drinking Water Standards have been established for both parameters. Under §6 of the Occupational Safety and Health Act of 1970, a final standard for occupational exposure to lead and chromium has been established and promulgated in 19 CFR 1910.1000.[8,9] Also, a national ambient air quality standard for lead has been announced by EPA pursuant to the Clean Air Act. [8] In addition, final or proposed regulations of the states of California, Maine, Massachusetts, Minnesota, Missouri, New Mexico, Oklahoma and Oregon define chromium and lead containing compounds as hazardous wastes or components thereof.[10]

VI. Damage Incidents*

These damage incidents are attributable to the improper disposal of spent pickle liquor and sludges from the lime treatment of spent pickle liquors. They are just a few examples of the damage which may result if these wastes are mismanaged.

- In 1970, neutralized spent pickling liquors dumped in an abandoned strip mine by a waste disposal firm leached into the surrounding soil and, eventually, into streams in Monroe County, Ohio. Fish were killed as a result in nearby Wilson's Pond. In 1971, Wilson's Pond overflowed into Little Beaver Creek, causing a major kill of some 77,000 fish. The disposal firm was ordered to construct facilities to contain and treat wastes which were being discharged into a nearby stream. Extensive pollution of groundwater persists, however, and there is a threat to the water supply of several homes and a school.

- In Washington County, Pennsylvania, leachate from a landfill has entered the groundwater and has contaminated

*Draft Environmental Impact Statement for Subtitle C, Resource Conservation and Recovery Act of 1976, Appendices.

a farmer's well and spring a half mile away. The landfill accepts sludges containing heavy metals and poorly neutralized pickle liquor from steel mills.

° In April, 1975. an employee in York County, Pennsylvania, siphoned wastes from a company's settling pond into a storm drain emptying into a fishing creek. The acidity of the drained wastes caused a fish kill in the creek. The waste and sludge in the ponds were spent pickle liquors which had allegedly been neutralized. The sludge is to be hauled to a landfill and the lagoons are to be lined.

References

1. Draft Development Document for the Proposed Effluent Limitations Guidelines and Standards for the Iron And Steel Manufacturing Point Source Category; Sulfuric Acid Pickling Subcategory, Hydrochloric Acid Pickling Subcategory. Volute VIII, November, 1979.

2. Calspan Corporation, Assesment of Industrial Hazardous Waste Practices in the Metal Smelting and Refining Industry. Appendices. April, 1977. Contract Number 68-01-3604, Volume III, pages 6-69. App. 12, 37.

3. Waste Characterization Data, from the State of Illinois EPA, as selected from State files by US EPA/OSW on 3/14/79 and 3/15/79.

4. Waste Characterization from the State of Pennsylvania Department of Environmental Resources, Division of Solid Waste Management, March 20, 1978, as selected from State files by US EPA/OSW, on 1/4/79 and 1/5/79.

5. Waste Characterization Data from the State of Illinois EPA, as selected from State files by US EPA/PSW on 3/14/79 and 3/15/79.

6. Pourbaix, Marcel. Atlas of Electrochemical Equilibria in Aqueous Solutions, London, Pergamon Press, 1966.

7. Appendix J--Hazardous Waste Incidents, Draft Environmental Impact Statement for Subtitle C, RCRA, January 1979, as synopsized from Office of Solid Waste, Hazardous Waste Management Division; Hazardous Waste Incidents, unpublished open file data, 1978.

8. U.S. Department of the interior, Bureau of Mines. Mineral Commodity Summaries, 1979.

9. U.S. Department of Health, Education and Welfare, National Institute for Occupational Safety and Health. Registry of Toxic Effect of Chemical Substances. 1977.

10. U.S. EPA States Regulations Files, January, 1980.

11. MITRE Corporation, "An Integrated Five-Year Research Plan (FY 79-80) for EPA's Atmospheric Acid Deposition Program". (Draft)

Non-Ferrous Smelting and Refining Industry

PRIMARY COPPER SMELTING AND REFINING

Acid plant blowdown slurry/sludge resulting from the thickening of blowdown slurry (T)

Summary of Basis for Listing

Acid plant blowdown slurry/sludge, resulting from the thickening of the blowdown slurry, is a waste stream from the treatment of the acid plant blowdown slurry at facilities where primary copper is smelted in a reverberatory furnace. The Administrator has determined that these sludges are solid wastes which pose a substantial present or potential hazard to human health or the environment when improperly transported, treated, stored, disposed of or otherwise managed and, therefore, should be subject to appropriate management requirements under Subtitle C of RCRA. This conclusion is based on the following considerations:

1) Acid plant blowdown slurry contains high concentrations of the toxic heavy metals lead and cadmium.*

2) A large quantity of these wastes is generated annually (approximately 286,000 MT (dry weight) was produced in 1977) and this quantity is expected to increase to 360,360 MT by 1983.

3) A solubility study has shown that lead and cadmium can be leached from these sludges by even a mild (distilled water) leaching media. Therefore, even under the mild conditions, the possibility of groundwater contami-

*For concentrations of other listed toxic heavy metals that do not warrant waste listing, see Attachment 1.

nation via leaching will exist if these waste materials are improperly disposed.

4) Current waste management practices consist of storage or disposal in unlined lagoons. These waste management practices may not be adequate to prevent a hazard to human health and the environment.

Discussion

A. Profile for the Industry

A 1977 review (1) indicated that there were 15 primary copper smelters in the United States operated by eight companies. A more recent source (2) identifies seventeen primary smelters operated by nine companies. Table 1 lists the seventeen plants and their production capacities. Almost all of the smelting capacity is concentrated in the southwestern United States, primarily Arizona and New Mexico. An average smelter can be assumed to have a capacity of 100,000 metric tons per year (1). Total national production of copper is increasing, based on a comparison of total capacities cited by References 1 and 2.

B. Manufacturing Process

Processing of copper includes mining, concentrating of ores, smelting and refining. The smelting process involves two basic steps (3). First, the copper concentrate is melted in a reverberatory furnace to yield matte, which is essentially a mixture of copper and iron sulfides. The matte is then fed to converters in which air oxidation converts the copper sulfate to impure copper and the iron sulfide to an iron

oxide/silicate slag that can be separated from the copper. The product resulting from the reverberatory furnace converter smelting is blister copper. Depending on the intended final use, the blister copper is purified by fire refining and electrolytic refining. A flow diagram for the primary copper smelting process is shown in Figure 1.

The source of the listed waste stream is also indicated in Figure 1. (Note that the reverberatory furnace slag is not included in the listing since data submitted during the comment period indicated that the contaminants in the slag tend not to migrate out of the waste.) Lead and cadmium, the metals that constitute the basis for listing, are always in the waste since they are always present in the basic raw material, namely copper ore.

C. Waste Generation and Management

As indicated in Figure 1, the listed waste addressed in this document arises from the acid plant which constitutes the principal controller for removal of sulfur dioxide from furnace and converter off-gases (3). The converter off-gases typically contain 5% or more of sulfur dioxide (3). According to the Calspan report (1), the acid plant for an average 100,000 metric ton/year smelter generates a blowdown slurry at a rate of about 2,270 cubic meters/day. After thickening, the bulk of the solid content of slurry is recycled to the

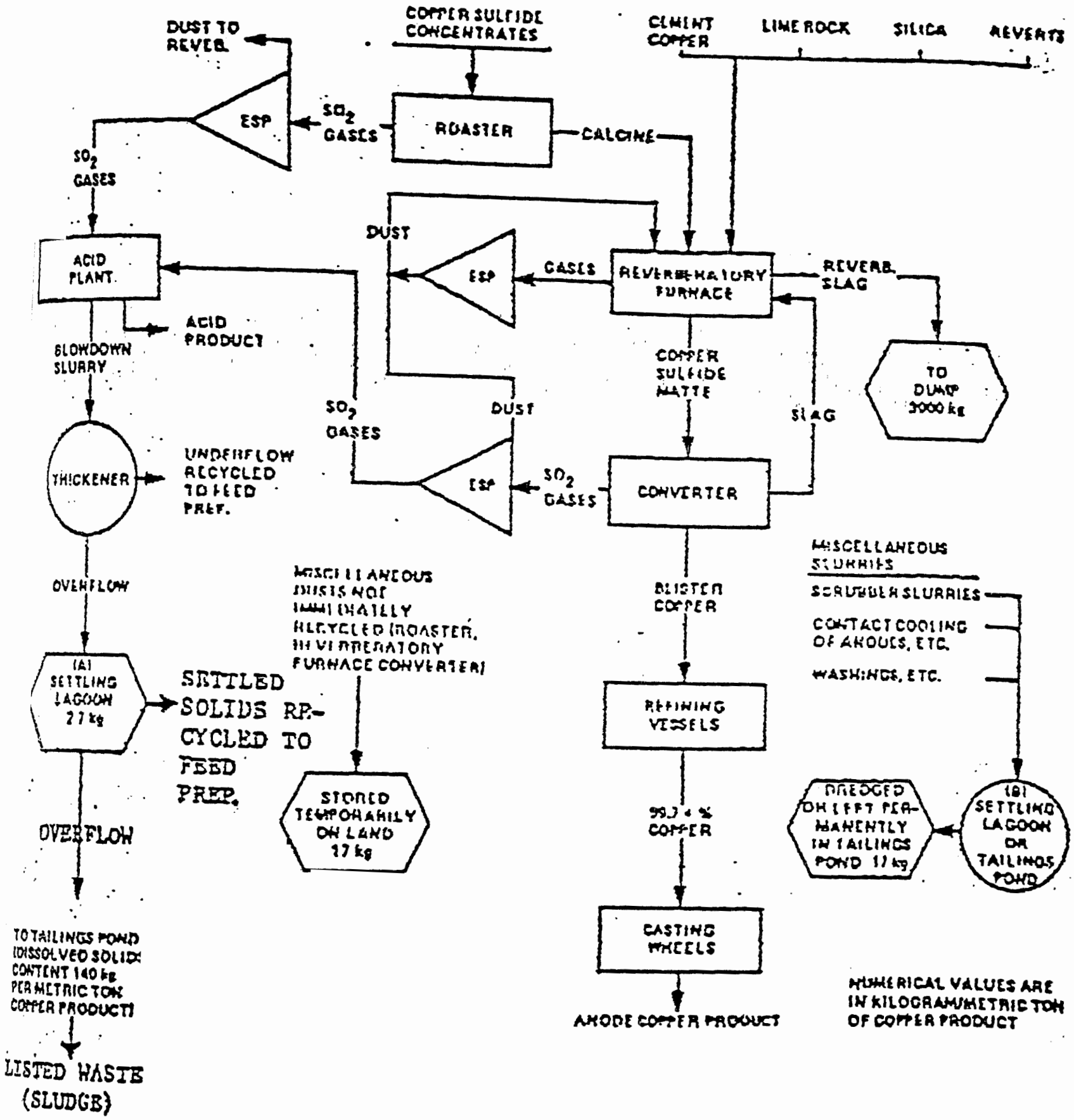

Figure 1 PRIMARY COPPER SMELTING AND FIRE REFINING

Source: Reference 1

reverberatory furnace.* The overflow from the thickener - about 2,200 cubic meters per day, containing 0.77 metric tons of suspended solids and 40 metric tons of dissolved solids - is sent to a lagoon for settling. The suspended solid content is eventually recovered and recycled to the smelter.* The 40 metric tons/day of dissolved solids remain in the aqueous lagoon effluent which is discharged to the main tailings pond.

Available documentation (1) indicates that this sludge is allowed to accumulate, along with the tailings waste, in the tailings pond. There is no evidence that this sludge/tailings mixture is dredged out for further treatment or disposal. Available documentation also indicates that these tailings ponds are unlined. These unlined tailings ponds are, therefore, the point of disposal for the 40 MT/day of material from the acid plant blowdown slurry that is <u>not</u> recycled. In comparison, 46 MT/day of thickener underflow solids and 0.8 MT/day of the overflow suspended

*At this time, applicable requirements of Parts 262 through 265 apply insofar as the accumulation, storage and transportation of hazardous wastes that are used, reused, recycled, or reclaimed. The Agency believes that this regulatory coverage is appropriate for the subject wastes. The slurry/sludge is hazardous insofar as they are being accumulated and stored in surface impoundments and insofar as they may be stored in piles prior to recycling. This waste may not pose a substantial hazard during the recycling and, even though listed as a hazardous waste, this aspect of their management is not now being regulated.

Table 1

GEOGRAPHICAL DISTRIBUTION AND CAPACITIES OF PRIMARY COPPER SMELTERS

Company	Location	Smelting Capacity (MT*/yr)
Anaconda	Anaconda, MT	198,000
ASARCO	Hayden, AZ	180,000
	El Paso, TX	115,000
	Tacoma, WA	100,000
Cities Service	Copper Hill, TN	22,000
Copper Range	White Pine, MI	90,000
Hecla Mining	Casa Grande, AZ	31,000**
Inspiration	Miami, AZ	150,000
Kennecott	Garfield, Utah	280,000
	Hurley, NM	80,000
	Hayden, AZ	80,000
	Mc Gill, NV	50,000
Magma	San Manuel, AZ	200,000
Phelps Dodge	Morenci, AZ	177,000
	Hidalgo, NM	140,000
	Douglas, AZ	127,000
	Ajo, AZ	70,000

* MT - metric tons
** Smelting is done by a leach process, but the plant has an acid plant associated with the roaster.

solids are eventually recycled during treatment of the acid plant blowdown slurry.

Table 2 summarizes the total quantities of acid plant blowdown slurries (and miscellaneous other small volume slurries) that are generated. A total of 286,000 metric tons (dry weight) of waste sludge from primary copper smelters was generated in 1977. It is estimated (1) that this quantity will increase by about 26% to 360,360 metric tons by 1983. The total quantity of waste sludge disposed of (not recycled) by primary copper smelters in 1977 was 128,400 metric tons (dry weight).

D. Hazards Posed by the Waste

1. Concentrations of Lead and Cadmium in the Waste Stream

The listed waste has been analyzed (1) and found to contain toxic heavy metals. The concentrations found are summarized in Table 3.

Sludges also have been subjected to leaching tests and have been shown (1) to leach lead and cadmium in significant concentrations. The leaching tests in the Calspan Study (1) was performed on one sample by agitating one part waste with two parts distilled water (initial pH 5.5) for 72 hours. The mixture was then filtered and analyzed. Table 4 presents the concentrations found in the leachate from the sludge sample. As shown by the test results in Table 4, cadmium appears in concentrations 17,000 times the EPA National Interim Primary Water Standard, and lead

TABLE 2

ESTIMATED TOTAL WASTE SLUDGES FROM PRIMARY COPPER SMELTERS IN 1977* (METRIC TONS - DRY WEIGHT)

State	Total Blowdown Slurry	Total Disposed
Tennessee	2,300	1,000
Michigan	17,500	7,900
Texas	14,800	6,700
New Mexico	24,800	11,200
Montana	28,500	13,000
Utah	34,300	15,000
Arizona	143,600	64,600
Nevada	6,100	2,700
Washington	14,100	6,300
Total	286,000	128,400

*A number of copper smelters which were in existence in 1974 are no longer in operation, thus, the wastes produced by these smelters are not included in this table.

Source: Reference 1, Table 7d

TABLE 3

CONCENTRATIONS OF HEAVY METALS IN WASTE SLUDGES FROM PRIMARY COPPER SMELTERS (PPM)

Metal	Sludges
Cadmium	520
Lead	8000

Source: Reference 1

appears in concentrations 150 times the National Primary Interim Standard.

The distilled water leaching procedure used in the Calspan tests (1) thus indicates that lead and cadmium will leach from the waste even when subjected to mild environmental conditions. A more aggressive leaching agent may lead to more substantial release of the toxic metals. Disposal/storage in a surface impoundment or landfill with an acidic environment will certainly enhance the solubility of lead and other heavy metals, since their solubility is pH dependent (i.e., solubility increases as the pH decreases (4)).

The information on the solubility of the compounds coupled with the fact that solubilization can occur more readily due to the fine particulate composition of the sludges suggests that the heavy metals present in the listed waste may be released from the acid plant blowdown under improper storage/disposal conditions.

Once released from the matrix of the waste, toxic heavy metals can migrate from the disposal/storage site to ground and surface waters utilized as drinking water sources. Present practices associated with impounding the waste may be inadequate to prevent such an occurence. For instance, selection of disposal sites in areas with permeable soils can permit contaminant-bearing leachate

Table 4

CONCENTRATIONS OF HEAVY METALS IN FILTERED DISTILLED WATER LEACHATE, PPM

	Sludges
Cadmium	8.4
Lead	7.8

Source: Reference 1

from the waste to migrate to groundwater. This is especially significant with respect to ponded wastes because a large quantity of liquid is available to percolate through the solids and soil beneath the fill.

In addition to difficulties caused by improper site selection, the lagoon/tailing ponds are likely to have insufficient leachate and surface run-off control practices. Therefore, there may be no leachate collection and treatment system to diminish leachate percolation through the wastes and soil underneath the site to groundwater. Further, there may be no surface run-off diversion system to prevent contaminants from being carried from the disposal site to nearby surface waters.

An overflow problem would thus be encountered if the liquid portion of the waste has been allowed to reach too high a level in the lagoon/tailing pond; a heavy rainfall could cause flooding which might reach surface waters in the vicinity.

Should lead and cadmium migrate from this waste, they would persist in the environment (in some form) virtually indefinitely and, therefore, may contaminate drinking water sources for long periods of time. Furthermore, cadmium is bioaccumulated at all tropic levels. Lead can be bioaccumulated and passed along

the food chain, but not biomagnified. The liklihood of human exposure is thus increased.

The large quantities of this waste stream generated (a total of approximately 286,000 MT (dry weight) in 1977) is an additional factor supporting a listing of this solid waste as hazardous. As previously indicated, the waste from primary copper smelting is generated in substantial quantities and contains significant concentrations (See Table 3) of cadmium and lead. Large amounts of these metals from the waste sludge are thus available for potential environmental release. The large quantities of these contaminants pose the danger of polluting large areas of ground or surface waters. Contamination could also occur for long periods of time, since large amounts of pollutants are available for environmental loading. Attenuative capacity of the environment surrounding the disposal facility could also be reduced or used up due to the large quantities of pollutants available. All of these considerations increase the possiblity or exposure to harmful constituents and, in the Agency's view, support a T listing.

2. <u>Hazards Associated with Lead and Cadmium</u>

As presented below, The actual toxicity of these harmful constituents is well documented.

A 1977 review (6) summarizes much of the available data on the toxicity of lead and cadmium. Capsule descriptions of adverse health and environmental effects based on Reference 6 are summarized below; more detail on the adverse effects of lead, and cadmium can be found in Appendix A.

Lead is poisonous in all forms. It is one of the most hazardous of the toxic metals because it accumulates in many organisms, and its deleterous effects are numerous and severe. Lead may enter the human system through inhalation, ingestion or skin contact. Lead is a cumulative poison in humans, leading to damage in kidneys, liver, gonads, nervous system and blood vessels. Lead compounds also have been reported to cause oncogenic and teratogenic effects in animals. Toxicity to aquatic organisms occurs at ppb concentrations.

Cadmium shows both acute and chronic toxic effects in humans. The LD_{50} (oral, rat) is 72 mg/kg of CdO. Cadmium and its compounds have been reported to produce oncogenic and teratogenic effects. Aquatic toxicity has been observed at sub-ppb levels.

The hazards associated with exposure to lead, and cadmium have been recognized by other regulatory programs. Lead and cadmium are listed as priority pollutants in accordance with §307 of the Clean Water Act of 1977. Under

§6 of the Occupational Safety and Health Act of 1970, a final standard for occupational exposure to lead has been established (7,8). Also, a national ambient air quality standard for lead has been announced by EPA pursuant to the Clean Air Act (8). In addition, final or proposed regulation of the State of California, Maine, Maryland, Massachusetts, Minnesota, Missouri, New Mexico, Oklahoma and Oregon define cadmium or lead containing compounds as hazardous wastes or components thereof (9).

Attachment 1

These wastes contain measurable concentrations of certain other constituents listed in Appendix VIII of Part 261, including arsenic, chromium, mercury and selenium. The concentrations of these constituents in both the waste and distilled water leachate samples are, however, deemed insufficient to warrent listing the wastes on basis of these additional constituents, as demonstrated by the following tables:

CONCENTRATIONS OF HEAVY METALS IN WASTE SLUDGES FROM PRIMARY COPPER SMELTERS (PPM)

Metals	Sludges
Chromium	50
Mercury	0.8
Selenium	30

Source: Reference 1.

REFERENCES

1. Calspan Corporation, "Assessment of Industrial Hazardous Waste Practices in the Metal Smelting and Refining Industry," Volume 2. Calspan Report Number ND-5520-M-1, April, 1977.

2. U.S. Department of the Interior, Bureau of Mines, "Copper - Mineral Commodity Profiles" September, 1979.

3. P. D. Dougall, "Copper" in M. Grayson and D. Eckoth, eds. Kirk-Othmer Encyclopedia of Chemical Technology. 3rd. ed. Volume 6, John Wiley and Sons, New York, 1979.

4. Pourbaix, Marcel. Atlas of Electrochemical Equilibria in Aqueous Solutions, London, Pergamon Press, 1966.

5. The Merck Index. 8th Edition. 1978.

6. Cleland & Kingsbury. "Multimedia Environmental Goals Volume 2." EPA Report Number 600/7-77-136B, November, 1977.

7. U.S. Department of Interior, Bureau of Mines, Mineral Commodity Summaries, 1979.

8. U.S. Department of Health, Education and Welfare, National Institute for Occupational Safety and Health. Registry of Toxic Effects of Chemical Substances. 1977.

9. U.S. EPA States Regulations Files, January, 1980.

LISTING BACKGROUND DOCUMENT

PRIMARY LEAD SMELTING

Surface impoundment solids contained in and dredged from surface impoundments at primary lead smelting facilities.(T)

Summary of Basis for Listing

The smelting of primary lead produces a number of wastewaters and slurries, including acid plant blowdown, slag granulation water, and plant washwater. These wastewaters and slurries are sent to treatment and storage impoundments to settle out the solids. The solids may be left in the lagoons, or they may be periodically dredged and disposed of elsewhere.

The Administrator has determined that the solids contained in and dredged from surface impoundments used to treat or store wastewaters and slurries from primary lead smelting may pose a present or potential hazard to human health or the environment when improperly managed and therefore should be subject to appropriate management requirements under Subtitle C of RCRA. This conclusion is based on the following considerations:

1. The waste contains significant concentrations of the toxic heavy metals, lead and cadmium.

2. Significant concentrations of lead and cadmium have been shown to leach from samples of the waste which were subjected to an extraction procedure designed to predict the release of contaminants to the environment. If the wastes are not properly managed, leachate could migrate from the waste disposal site and contaminate underlying drinking water sources. Further, lead and cadmium do not degrade, so that contamination, and the opportunity for contaminant contact with living receptors, will be long-term.

3. Estimates indicate that large quantities of the waste are generated each year (more than 49,100 tons in 1978) and that the typical waste management practices may be inadequate to prevent substantial environmental harm caused by lead and cadmium migration.

Manufacturing Process and Sources of Hazardous Wastes (1)

The primary lead facilities that generate the hazardous wastes that concern EPA are four integrated lead smelter/refineries. These facilities are located in Missouri and Idaho. Production capacity ranges from 110,000 to 225,000 tons per year. Total primary lead production (from the four integrated smelter/refineries, two smelters and one refinery) was 611,650 tons in 1977. Forecasts indicate that domestic demand will increase to 1,030,000 - 2,340,000 tons in the year 2000.

All domestic smelters and refineries produce lead by pyrometallurgical smelting and refining processes. The major process steps are the same at all the smelters, with the exception that those that treat non-Missouri ore concentrates use auxiliary operations to recover valuable metals or remove undesirable impurities. The following is a step-by-step description of the manufacturing process as presented in Figure 1. This description includes the major process steps for all primary lead smelting and refining plants.

During the smelting process, concentrates produced by the beneficiation of various lead bearing ores are converted to an impure lead bullion suitable for refining. The ore concentrate is the major feedstock material. Other raw materials that may be added during the process include iron, silica, limestone flux, coke, soda, ash, pyrite, zinc, caustic, and particulates and sludges collected in pollution control devices. The ore concentrate and the pollution control dusts and sludges are the primary sources of lead and cadmium found in the settled solids from the surface impoundments.

The first of the processes in smelting is sintering, an operation which agglomerates the fine particles, converts metallic sulfides to oxides, drives off volatile metals, and eliminates most of the sulphur as sulphur dioxide. Off-gases from sintering may contain sulphur dioxides in concentrations that

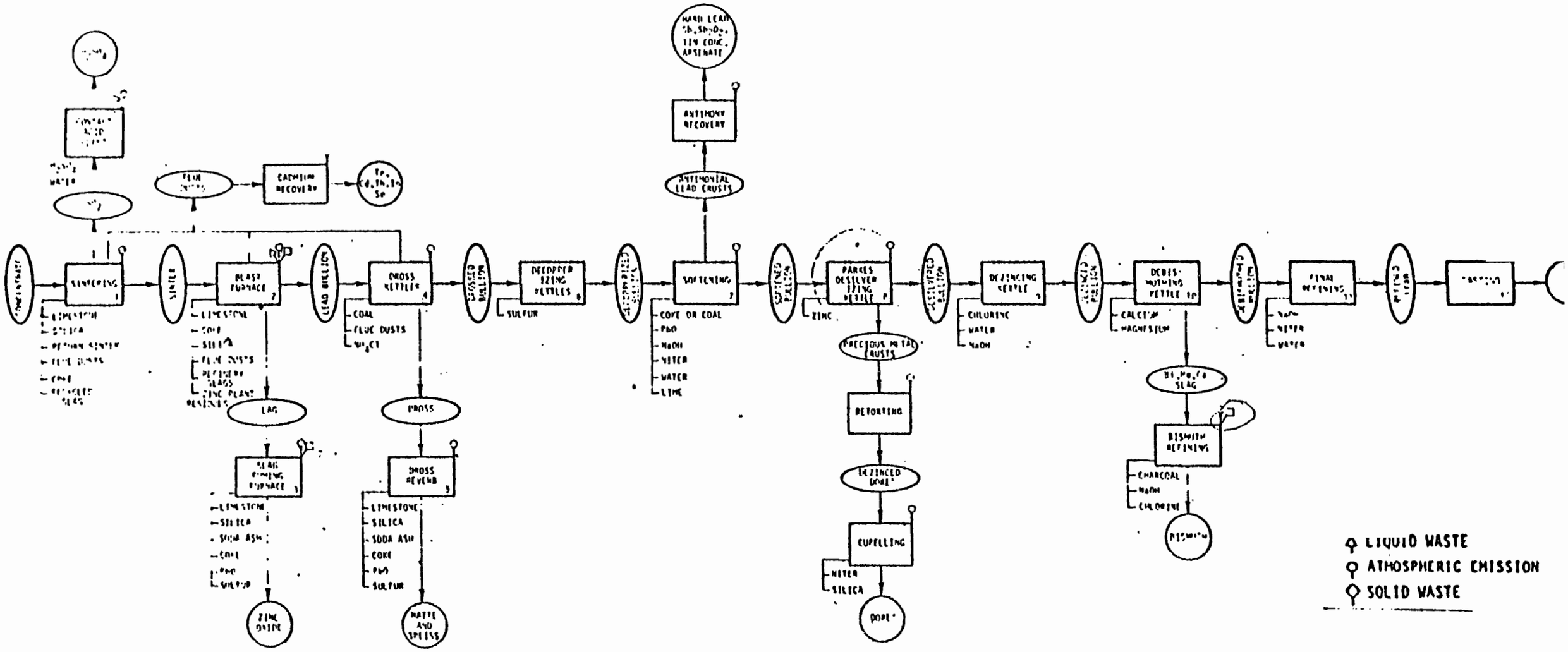

Figure 1. Flow chart depicts primary lead smelting and refining.(umbers correspond to process numbers in text and also correspond to step process in this document. The first three steps produce the hazardous miscellaneous slurries of concern.)

are practical for recovery. Of particular concern, though, are the lead and cadmium entrained in those off-gases. Four plants have sinter machines designed to produce an off-gas containing enough sulphur dioxide to permit recovery of sulphur as sulphuric acid. The sulphur recovery operation generates a stream of weak acid called acid plant "blowdown". The acid plant blowdown stream contains lead and cadmium. Neutralization of the blowdown with lime usually generates a slurry destined for an on-site surface impoundment. This waste stream, resulting from the sulphur recovery operation, requires proper management.

In the second step in primary lead smelting and refining, sinter is charged to the blast furnace and smelted to crude lead bullion that can be further refined. During this reduction process, the components of the sinter are separated into four distinct layers, bullion, speiss, matte and slag. The two layers of concern are the bullion layer and the slag layer which result from the interaction of fluxes and metal impurities. The crude lead bullion is charged to drossing (the fourth step in this process.) The blast furnace slag may be disposed of or sent to a zinc fuming furnace (an interim step) for recovery of lead and zinc, rather than opting for direct disposal. The zinc fuming process, in turn, also generates a slag. Blast furnace slag and zinc fuming slag disposal practices are similar. The waste is either

sent directly to a slag pile or granulated in a water jet before being transported to the slag pile. The granulation process cools newly generated, hot slag with a water spray. Slag granulation water is often transported to surface impoundments for settling.

The blast furnace bullion undergoes "drossing" (Step 4) to remove common metallic impurities. Dross separated from the lead bullion must be further treated in a reverberatory drossing furnace (Step 5) to recover metal values. Rough-drossed lead bullion, still containing copper, is decopperized (Step 6) before further refining. One of three usual processes is then used to remove metals that cause lead to harden. This process is called softening (Step 7). Softened lead bullion contains precious metals, gold, and silver, which are recovered for their economic value through the Parkes desilverizing process (Step 8). To remove the excess zinc added during desilverization, a dezincing process (Step 10) which removes the bismuth, which is in excess of the 0.15 percent specification for desilvered and dezinced lead bullion. Lead bullion from dezincing or debismuthing is combined with flux to remove remaining impurities before casting (Step 11) and, finally, the refined lead bullion is cast into ingots for sale (Step 12).

The listed hazardous wastes generated by primary lead

smelting plants are settled solids from surface impoundments. The impoundments are used to collect solids from miscellaneous slurries, such as acid plant blowdown, slag granulation water and plant washings. Plant washing is a housekeeping process; plant washdown normally contains a substantial amount of lead and other process material.

Data indicate that in 1978 four integrated smelter/refineries that process lead ore concentrates combined to produce more than 49,100 tons of impoundment solids considered hazardous. The data also indicate that the bulk of this waste is generated and managed at three plant locations.

The waste contains high concentrations of lead and cadmium. The presence of such high concentrations of toxic metals in a waste stream in and of itself raises regulatory concerns. Furthermore, distilled water extraction test data indicate that these dangerous condstituents may leach from the waste in harmful concentrations unless the wastes are properly managed.

Waste Generation and Management (1)

As previously mentioned, the miscellaneous slurries generated by primary lead smeltering plants are settled in

surface impoundments. Typically a minimal effort is expended for impoundment site selection. Site selection is based primarily on convenience. Site preparation usually consists of simply scooping out earth to form impoundments. EPA is unaware of any sealants or liners being employed beneath disposal areas. Leachate or groundwater monitoring is not adequately utilized, or not utilized at all.

Four facilities have surface impoundments. Currently, some of the impoundments are dredged of their accumulated solids on an "as needed" basis. Dredging is done with common equipment at frequencies from once per year to once every 3 years or longer. The dredged material is either dumped beside the impoundment or trucked to an on-site dump. Some of this material may be recycled to sintering if it contains enough metals.*

Hazardous Properties of the Waste (3)

EPA has sampled process wastewater before and after treatment in an effort to quantify the amounts of lead and cadmium likely to be in the waste. The settled solids are assumed to contain the pollutants removed from the process wastewater. The data are summarized as follows:

*See "Response to Comments" at the end of this document for a discussion on the coverage of those materials recycled back to the process.

Plant A

Flow = 1,300,000 gpd (gallons per day)

Metal	Influent Concentration	Effluent Concentration	Difference	lbs/day in solids
Cd	0.89 ppm	0.044 ppm	0.846 ppm	9.172
Pb	17 ppm	0.925 ppm	16.075 ppm	174.3

Plant B

Flow = 280,000 gpd

Metal	Influent Concentration	Effluent Concentration	Difference	lbs/day in solids
Cd	15 ppm	0.43 ppm	14.57 ppm	34
Pb	50 ppm	0.39 ppm	49.61 ppm	115.85

Based on continuous year round plant operation, these data show that approximately 3300 lbs/yr of cadmium accumulate in an impoundment in Plant A and approximately 12,400 lbs/yr accumulate in Plant B. Lead in the impoundment solids from Plant A accumulates at a rate of almost 64,000 lbs/ yr., and at a rate of almost 42,300 lbs/yr at Plant B. Should only one percent of each metal leach from the settled solids from Plant B, the result would be 124 lbs/yr of cadmium

and 423 lbs/yr of lead potentially available to the environment from that one plant.

The above evidence indicating that significant amounts of lead and cadmium are present in the settled solids is supported by actual waste analyses which reveal that the waste does in fact contain high concentrations of these toxic heavy metals. The Calspan Corporation tested samples of the impoundment dredgings at two plants and found the following concentrations of lead and cadmium:(2)

Hazardous Constituents of Impoundment Dredgings (ppm)

	Cd	Pb
Plant I	700	115,000
Plant II	640	140,000

Calspan Corporation also subjected a sample of the waste believed to be representative of the lagoon dredgings to a water extraction to determine whether the toxic heavy metals could leach from the waste. Approximately 50 grams of a sample was placed in a 200 milliliter jar and two parts by weight of water were added. The bottle was gently agitated on a rotary tumbler for 72 hours. The extract was then filtered through a 0.45 micron micropore filter and the filtrate was analyzed for heavy metals. This waste leached

11 ppm of cadmium (1,100 times the amount permitted by the National Interim Primary Drinking Standard) and 4.5 ppm of lead (90 times the amount permitted by the National Primary Drinking Standard). Therefore, cadmium and lead are likely to be leached from the waste in harmful concentrations even when they are placed in a monodisposal site subject to mild environmental conditions. If these wastes are placed in acidic environments such as disposal sites subject to acid rainfall or co-disposal with acids, the concentrations will probably be higher, since lead and cadmium compounds are generally more soluble in acid than in distilled water.

The hazard associated with leaching of hazardous constituents from the impoundments during the interim storage period is the migration of those constituents to ground and surface waters. The miscellaneous slurries are probably composed of particulates of various sizes, ranging from dust particles to fine slag from slag granulation water. The potential of hazardous constituents to be released from the matrix is influenced by the physical form of the waste. For instance, wastes composed of fine particles provide greater surface area on which a solubilizing medium can act and therefore the probability is increased that hazardous constituents will leach from the waste. Contaminant-bearing leachate can then migrate to ground and surface water.

Thus, improper disposal of surface impoundment solids may result in contamination of ground and surface waters by lead and cadmium. Aquatic species might be affected, and, where ground and surface waters are sources of drinking water, ingestion of the contaminants by humans could occur. For this reason, proper waste management is essential and of major concern to EPA.(2)

Present management practices appear to be inadequate to prevent contamination of ground and surface waters used as drinking water sources. Presently, if solids are allowed to settle in unlined and unsealed impoundments in areas with permeable soils, the solubilized lead and cadmium in the liquid phase could migrate from the site to an aquifer. Groundwater contamination might also occur if the dredged solids are dumped on permeable soils since no provision presently appears to be made to prevent percolation of rainfall through the waste or to collect resulting leachate. Surface waters may become contaminated if run-off from dumping sites and overflow from impoundments are not controlled by appropriate diversion systems.(2)

Compounding this problem, and an important consideration for the future, is the fact that should lead or cadmium escape from the disposal site, they will not degrade with

the passage of time, but will provide a potential source of longterm contamination.

Further, as indicated previously, the cadmium and particularly the lead found in the impoundments are generated in very substantial quantities. Large amounts of each of these metals are thus available for potential environmental release. The large quantities of these contaminants pose the danger of polluting large areas of ground and surface waters. Contamination could also occur for long periods of time, since large amounts of pollutants are available for environmental loading. The attenuation capacity of the environment surrounding the disposal facility could also be reduced or exhausted by such large quantities of of pollutants. All of these considerations increase the possibility of exposure to harmful constituents in the wastes, and in the Agency's view, demand recognition.

Adverse Health Effects Associated with Lead and Cadmium

Lead and cadmium are toxic heavy metals that threaten both human health and that of other organisms. The hazards of human exposure to lead include neurological damage, renal damage and adverse reproductive effects. In addition, lead is carcinogenic to laboratory animals, and relatively toxic

to freshwater organisms. It also bioaccumulates in many species. Additional information on lead can be found in Appendix A. Cadmium (see Appendix A for more information) also can cause toxic effects in many species. It is bioaccumulated at all trophic levels and has been shown to be mutagenic and teratogenic in laboratory animals.

Hazards associated with exposure to lead and cadmium have been recognized by other regulatory programs. For example, Congress designated lead and cadmium as priority pollutants under §307 of the Clean Water Act. The Occupational Health and Safety Administration has a final exposure standard for lead and a draft standard has been developed for cadmium under §6 of the Occupational Safety and Health Act of 1970. The states of Maine, Vermont, New Mexico, Missouri, Massachusetts, Minnesota, Oklahoma, Oregon, and California either regulate or are considering regulation of lead and cadmium as hazardous waste. The implications of these regulations or considerations thereof are obvious: unregulated lead and cadmium management is a real and recognized hazard.

References

1. USEPA, IERL/ORD and Office of Solid Waste. Assessment of Solid Waste Management Problems and Practices in Nonferrouse Smelters. Prepared by PEDCo Environmental Inc., Contract No. 68-03-2577. November 1979.

2. USEPA, Office of Solid Waste. Assessmet of Hazardous Waste Practices in the Metal Smelting and Refining Industry. Prepared by Calspan Corporation. Contract No. 68-01-2604. April, 1977.

3. USEPA, Office of Water Planning and Standards, Effluent Guidelines Division. Draft Development Document for Effulent Limitations Guidelines and Standards for the Nonferrous Metals Manufacturing Point Source Category. September, 1979.

Response to Comments

1. One commenter indicated that the listed waste (surface impoundment solids contained in and dredged from surface impoundments at primary lead smelting facilities) was recycled at his facility and, therefore, should not be listed as a hazardous waste.

The Agency has concluded that it does have jurisdiction under Subtitle C of RCRA to regulate wastewater treatment sludges and other waste materials that are used, reused, recycled or reclaimed. Furthermore, it has reasoned that such materials do not become less hazardous to human health or the environment because they are intended to be used, reused, recycled or reclaimed in lieu of being discarded. Although the materials recycled and reclaimed may not pose a hazard, the accumulation, storage and transport of a hazardous waste prior to use, reuse, recycle or reclamation will present the same hazard as they would prior to being discarded. In addition, the act of use, reuse, recycling or reclamation, in many cases, poses a hazard equivalent to that encountered if the waste were discarded. Thus, the Agency believes it has a strong environmental rationale for regulating hazardous wastes that are used, reused, recycled or reclaimed.

For the particular waste at issue, the Agency recognizes that it is a wastewater treatment sludge and for most or all of its existence prior to being recycled, it is deposited in a surface impoundment where the potential for leaching of the hazardous constituents is real and significant. Consequently, the waste must be considered a hazardous waste in this environment; to avoid listing it as a hazardous waste would be unjustified. Likewise, if the waste is piled and stored on the land, prior to recycling, the potential of leaching of its hazardous constituents into the environment would still prevail and avoiding its regulations would be unjustified.

The key question, therefore, is not whether or not it is a hazardous waste and should be listed as a hazardous waste, but whether or not or to what degree it should be regulated during recycling; that is, should the recycling process and facility be considered a hazardous waste management operation and facility required to obtain interim status and eventually a permit and required to meet the standards set forth in Parts 264 and 265 of the regulations. At this time, the Agency has deferred regulation of such facilities because it recognizes that the full set of Subtitle C management requirements may not be necessary. As and when it concludes that regulation of these facilities is necessary, it will terminate this

deferral and impose either the requirement of Parts 264 and 265 (as well as 122) or special tailored requirements under Part 266.

At this time, applicable requirement of Parts 262 through 265 and 122 will apply insofar as the accumulation, storage and transportation of hazardous wastes that are used, reused, recycled or reclaimed. The Agency believes this regulatory coverage and the above described deferral of regulated coverage is appropriate to the subject wastes. These sludges are hazardous insofar as they are being accumulated and stored in surface impoundments and insofar as they may be stored in piles prior to recycling. Therefore, these sludges should be listed as hazardous waste. These sludges may not pose a substantial hazard during their recycling and, even though listed as hazardous waste, this aspect of their management is not now being regulated.

LISTING BACKGROUND DOCUMENT

PRIMARY ZINC SMELTING AND REFINING

Sludge from treatment of process wastewater and/or acid plant blowdown (T)

Electrolytic anode slimes/sludges (T)

Cadmium plant leach residue (iron oxide) (T)

Summary of Basis for Listing

The primary zinc industry is comprised of 7 plants that employ one of two major zinc manufacturing processes--electrolytic or pyrometallurgical processing. The five electrolytic and two pyrometallurgical plants recover zinc metal from ore concentrates. Cadmium and lead contaminants found in the raw materials are carried through numerous processes and are subsequently found in high concentrations in the wastewater treatment sludge generated by the treatment of process wastewater and/or acid plant blowdown, in the electrolytic anode slimes/sludges and in cadmium plant leach residue (iron oxide).

The Administrator has determined that these wastes are solid wastes which may pose a substantial present or potential hazard to human health or the environment when improperly transported, treated, stored, disposed of or otherwise managed, and therefore should be subject to appropriate management requirements under Subtitle C of RCRA. This conclusion is based on the following considerations:

1) The wastes contain significant concentrations of the toxic heavy metals cadmium and lead.

2) Cadmium and lead have been shown to leach from samples of these wastes in significant concentrations

when the samples were subjected to a distilled water extraction procedure.

3) Electrolytic anode slimes/sludges and cadmium plant leach residue are generated at a rate of 2,600 tons/year, and 200/tons year, respectively. Sludge from the treatment of process wastewater and/or acid plant blowdown is generated at a rate greater than 11,000 tons/year. Such large quantities of wastes containing high concentrations of hazardous constituents increases probability of damage to human health and the environment under improper disposal conditions.

4) These wastes are currently stockpiled on site and/or hauled off-site to landfills in a manner that could allow the cadmium and lead in the wastes to leach to groundwater.

Industry Profile and Manufacturing Process

Five plants produce zinc by the electrolytic process, and two plants produce zinc by pyrometallurgical techniques (3). Locations of the plants, capacities and products are given in Table 1.

Electrolytic plants (not including the one new plant in Tennessee) account for approximately 9 percent of the total solid waste generated although they represent about 49 percent of the industry's production of slab zinc. The two pyrometallurgical plants account for 91 percent of the solid waste, although they represent only 51 percent of the production of zinc (3).

Electrolytic Process

At four of the electrolytic zinc plants, actual production rates range from 41,800 tons to 82,100 tons of slab zinc per year. These four plants account for approximately 268,300 tons of the total annual primary zinc production, or about 49 percent of the industry total. The fifth plant has come

LOCATIONS, CAPACITIES AND PRODUCTS OF PRIMARY ZINC SMELTERS AND REFINERS (3)

Company and Location	Process Description	Capacity (tons/year)	Product
Amax, Inc. East St. Louis, Ill.	Electrolytic	82,000	Slab zinc, cadmium, zinc sulfate, and sulfuric acid
Asarco, Inc. Corpus Christi, Tex.	Electrolytic	108,000	Slab zinc, zinc alloys, zinc sulfate, cadmium, and sulfuric aci
The Bunker Hill Co. Silver King, Idaho	Electrolytic	108,000	Slab zinc, zinc alloys, cadmium, and sulfuric acid
National Zinc Co. Bartlesville, Okla	Electrolytic	55,000	Zinc dust, zinc slab, zinc alloys, cadmium, cobalt cake, copper/lead/nickel cake, and lead silve residue
New Jersey Zinc Co. Palmerton, Pa.	Pyrometallurgical	113,500	Slab zinc, zinc alloys, zinc dust and pellets, zinc oxide, ferroalloy, and sulfuric acid
St. Joe Minerals Corp. Monica, Pa.	Pyrometallurgical	250,200	Slab zinc, zinc alloys, zinc oxide cadmium, ferrosilicon, mercury, and sulfuric acid
Jersey Miniere Co. Clarksville, Tenn.	Electrolytic	90,000	Slab zinc, cadmium, sulfuric acid

on-line recently, and production figures are not yet available (3). Electrolytic processing basically involves dissolving the zinc in a sulfate solution followed by electrolytic deposition of zinc (3). Process flow (see Figure 1) at the plants is very similar, with some variation[3].

The sources of solid waste generated by the electrolytic process are: (1) treatment of preleach residue (this operation occurs at only one plant), (2) the collection and treatment of acid plant blowdown and miscellaneous slurries, (3) the cleaning of the electrolysis cells (anode slimes/sludges), and (4) the filtration of the leach solution.

The preleach process is used by one electrolytic plant with an annual production of 62,300 tons. Preleaching removes excess magnesium from the incoming zinc concentrates. Magnesium is not electrolyzed but accumulates in the system; therefore the zinc concentrates having high magnesium levels must be preleached before further processing. The preleach step involves the reaction of sulfuric acid and a bleed stream from the acid plant (i.e., acid plant blowdown--a weak acid stream) with a portion (up to 100%) of the incoming concentrates to solubilize the magnesium. The insoluble concentrate containing zinc is separated and continues through the process. The solubilized material containing magnesium and the acidic preleach solution enter a lined surface impoundment, from which it is pumped to a wastewater treatment plant (WWTP). The sludge that settles in the impoundment is periodically removed and placed in the WWTP. This sludge, together with the sludge produced from

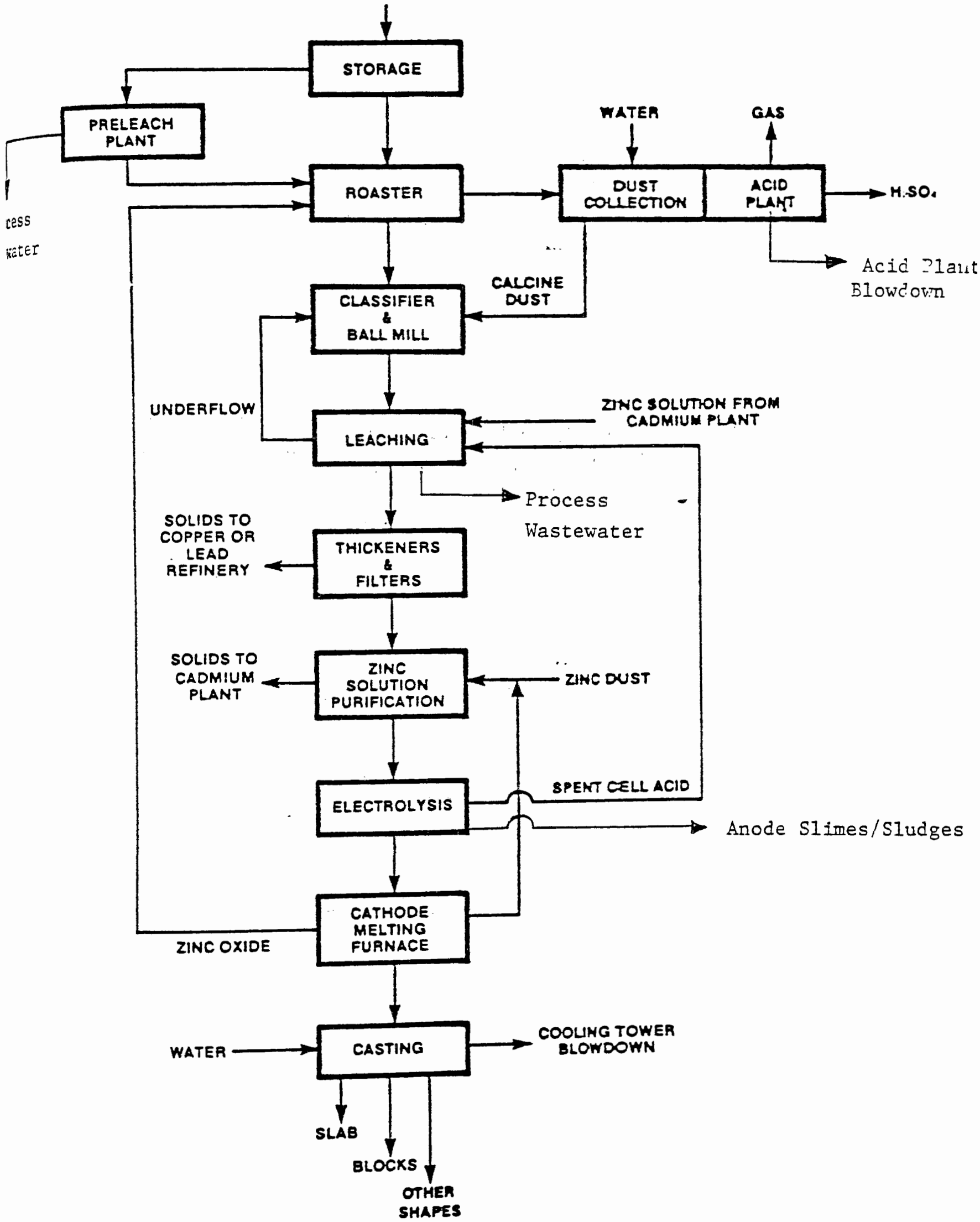

FIGURE 1. ELECTROLYTIC ZINC PRODUCTION PROCESS

the neutralization and precipitation reactions in the WWTP, is continuously removed and hauled to an off-site landfill operated by a private contractor. At the plant that uses preleaching, the WWTP sludge also contains solids from acid plant blowdown, anode slimes (electrolytic cell cleanings), and miscellaneous slurries. The available information indicates that 9,400 tons of WWTP sludge is generated annually by this plant (3).

All zinc concentrates received at zinc plants are roasted to drive off sulfur and convert the zinc sulfide in the concentrate to an impure zinc oxide called calcine (3). The conversion to calcine in the roaster produces a roaster off-gas stream containing enough sulfur dioxide to permit sulfur recovery as sulfuric acid. All electrolytic plants treat the roaster offgas in sulfuric acid plants to produce a salable sulfuric acid. The acid production results in a weak acid waste stream from the scrubbing columns that clean the off-gas. This waste is referred to as a bleed stream or acid plant blowdown. The acid plant blowdown is neutralized and thickened, and the solids are allowed to settle in ponds (3). Whether or not the solids are being stored for recycling, the solids do constitute a solid waste as defined by §261.2*. Treatment of

*The Agency has concluded that it does have jurisdiction under Subtitle C of RCRA to regulate wastewater treatment sludges and other waste materials that are used, reused, recycled or reclaimed. Furthermore, it has reasoned that such materials do not become less hazardous to human health or the environment because they are intended to be used, reused, recycled or reclaimed in lieu of being discarded. Therefore, at this time, applicable requirements of Parts 262 through 265 and 122 will apply insofar as the accumulation, storage and transportation of hazardous wastes that are used, reused, recycled or reclaimed.

the acid plant blowdown generates an estimated 1,400 tons of sludge per year, (3) which has been designated as hazardous.

All electrolytic plants also generate a waste of anode slimes or sludges from cleaning of the electrolytic cells. Anode slimes/sludges consist of gangue material that is passed through earlier process steps but is not plated out, or electrolyzed, in the electrolysis step. It is estimated that anode slimes/sludges make up 2,600 tons of the annual solid waste produced (3). This waste is also designated as hazardous.*

Pyrometallurgical Process

There are two pyrometallurigical zinc plants with a combined annual production rate of about 261,000 tons of zinc metal (3). These plants account for approximately 51 percent of the total production of zinc metal by the primary zinc industry, but 91 percent of the total soldi waste produced by the industry. Although the two plants use the same basic processes (see Figure 2), they differ greatly in the quantities of solid waste generated and in the ultimate disposal or control of the waste (3).

Pyrometallurgical processing entails the following steps: sintering, retorting, refining and casting. Sintering develops the desired characteristics for pyrometallurgical smelting of the calcine by processing the calcine in a sinter machine where the

*All electrolytic plants also generate a leach residue from filtration of the leach slurry, which is not currently listed as hazardous and will not be further discussed in this background document.

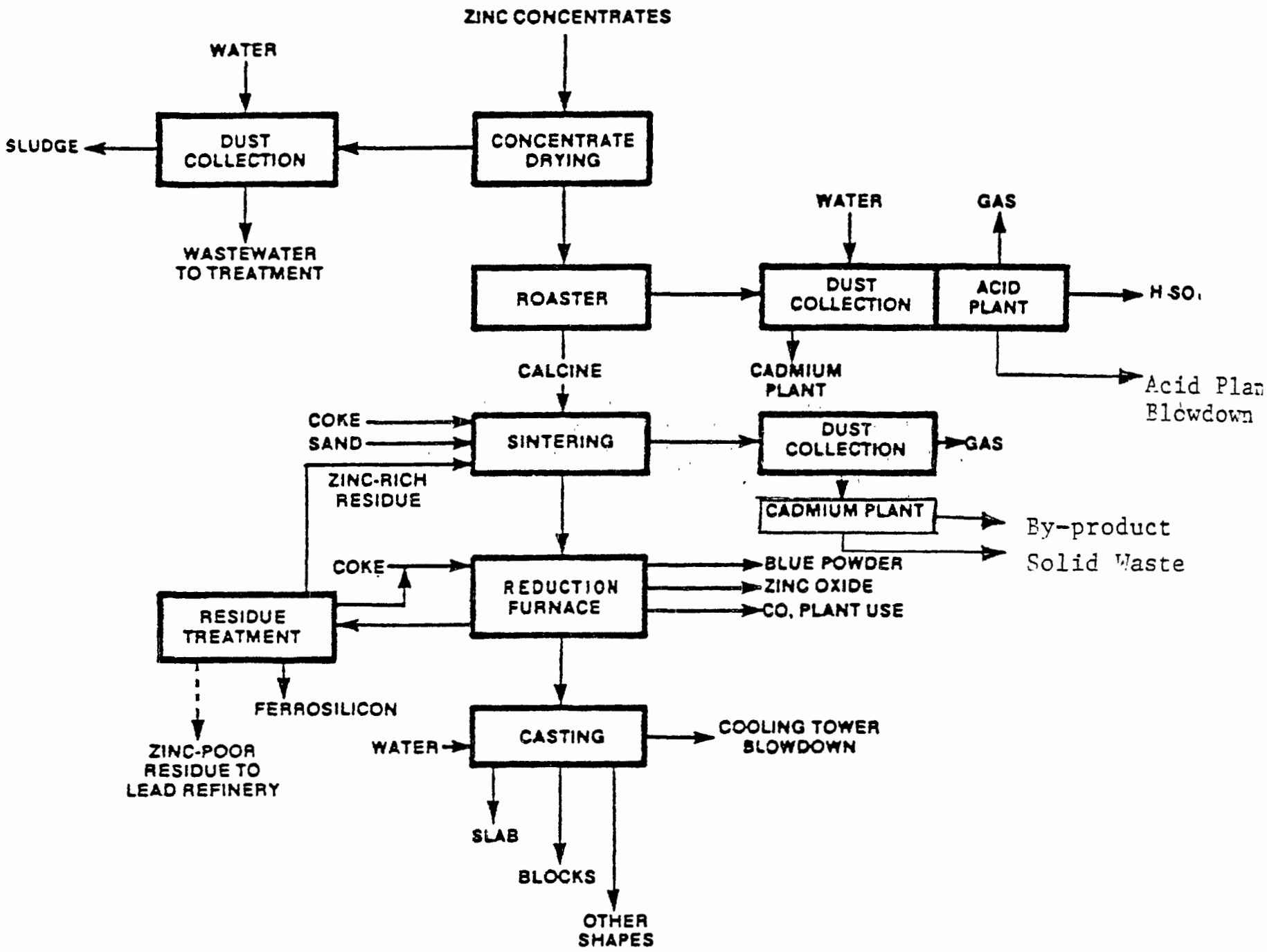

FIGURE 2. PYROMETALLURGICAL

ZINC PRODUCTION PROCESS

calcine burns autothermally and is fused into hard, permeable sinter. Retorting consists of reducing the calcine in the sinter with carbon in a retort to produce zinc metal. Preheated feed of sinter and coal or coke is fed into the top of the retort; the temperature reaches 1300°C-1400°C inside. Because of the zinc's low boiling point (906°C), it is volatilized as soon as it is formed. In this way the zinc is purified by separating it from the gangue material in the calcine. Zinc from the retort smelting may need further purification for some commercial uses. The zinc is purified by distillation in a graphic retort. Molten zinc from the graphic retort is either case pure into bars or blocks or is alloyed with other metals and case.

The sources of solid waste generated by the pyrometallurgical process which are hazardous are: (1) collection and treatment of acid plant blowdown, and (2) leaching of high-cadmium dusts in the cadmium plant (3).*

Both pyrometallurgical plants treat roaster off-gas in their sulfuric acid plants to control sulfur dioxide emissions. The process is the same as the one described above for electrolytic plants. The acid plants produce a salable sulfuric acid and a bleed stream (acid plant blowdown) that must be neutralized. One plant neutralizes the blowdown with lime, which leads to the generation of an estimated 10,000 tons per year of settled

*Two other wastes generated by this process (i.e., residue from the production of zinc oxide in Waelz Kins (one plant only) and furnace residue from the operation of retort and oxidizing furnaces) are not currently listed as hazardous and will not be further discussed in this background document.

sludge, half of which is recycled to the process. The sludge contains significant concentrations of cadmium and lead and is designated as hazardous.

The other pyrometallurgical plant uses the acid plant blowdown to cool and humidify the roaster off-gas in a humidifying scrubber. Acid plant blowdown from the scrubber is thickened and then cooled before being recycled to the scrubber. A bleed stream from the thickener bottoms is sent to the cadmium plant for cadmium recovery. This acid plant process generates no wastes.

Both of the pyrometallurgical plants operate cadmium plants to process dusts with high cadmium content that are collected from the sinter machine off-gas. Processing in the cadmium precipitation to produce a cadmium sponge. The leaching steps produce two residues. One contains relatively large quantities of lead, silver, and gold, and is sold as a by-product. The other residue constitutes a solid waste that contains cadmium and lead and is generated at a rate of 200 tons per year.(3) The latter residue has been classified as hazardous.

Waste Generation and Management (3)

At both the electrolytic and pyrometallurgical facilities off-gases from the roaster are treated in sulfuric acid plants to control sulfur dioxide emissions. This process generates acid plant blowdown which may be mixed with the process wastewater prior to treatment by lime precipitation.

The resulting sludge contains significant levels of lead and cadmium and is designated as hazardous.

Electrolytic refining generates a waste of anode slimes/sludges from cleaning the electrolytic cells. These slimes/sludges consist of gangue material that has passed through the earlier process steps but was not plated out in the electrolysis step. This waste also contains significant amounts of lead and cadmium and is designated as hazardous.

Pyrometallurgical plants process high cadmium dusts collected from the sinter baghouse to recover cadmium. Processing involves acid leaching which produces two residues. One contains significant amounts of lead, silver and gold; this residue is sold as a by-product. The other residue is a solid waste designated as hazardous because of its lead and cadmium content.

Current solid waste control practices are fairly uniform throughout the zinc industry. Of the total solid waste generated, about 90 percent is controlled through on-site stockpiling, 7 percent is removed by private and municipal organizations and individuals for various uses (such as winter road sand), and the remaining 3 percent is hauled and landfilled by private contractors.

Control Practices at Electrolytic Plants (3)

Electrolytic zinc plants produce solid waste consisting of anode "slimes/sludges", neutralized acid plant blowdown, surface impoundment dredgings, wastewater treatment sludge, and goethite residue.

Two of the electrolytic plants use wastewater treatment plants (WWTP) to treat plant wastewater and various process sludges. At both of these plants the WWTP sludge is removed and hauled to off-site landfills. One of the two plants removes this sludge continuously as it is filtered (dewatered). There is no on-site storage or disposal at this plant. This particular sludge contains solids from anode sludge, neutralization of acid plant blowdown, impoundment dredgings, and sludge generated from the treatment of a preleach slurry. The other plant using a WWTP piles WWTP sludge on-site temporarily for drying prior to removal and transportation to an off-site landfill. This particular sludge contains solids from the neutralization of acid plant blowdown and solids precipitated from plant runoff and washdown. At this plant, anode sludge is not treated in the WWTP but is stockpiled on site. The WWTP sludge from these two plants amounts to about 31 percent of the solid waste generated at electrolytic plants. All of this sludge is hauled to off-site landfills, either immediately or after temporary on-site storage. Because the WWTP at each of these plants treats acid plant blowdown, the WWTP sludges generated containing cadmium and lead, are considered hazardous.

Two of the remaining three electrolytic plants stockpile dredgings from surface impoundments on-site. One of these plants generates two additional solid wastes that none of the other plants generate. These two wastes, goethite and a sulfur residue, are also stockpiled on-site.

Three of the four electrolytic zinc plants operating through 1978 used lined surface impoundments. Two of these plants use synthetic liners; the other uses a clay liner. The fourth plant has an unlined surface impoundment. Monitoring wells are used by at least one plant.(3)*

It is assumed(3) that the fifth plant, one which has recently come on-line and will have a WWTP, will generate a sludge which will be removed to an off-site landfill. It is also assumed(3) that this plant will use a lined surface impoundment which treats the anode sludge, acid plant blowdown, impoundment dredgings, and plant wastewater in the WWTP. These assumptions, based on plant similarities indicated in the available literature(3), were necessary to estimate quantities of solid waste generation at this new facility. In order to avoid underestimation, the new plant is also assumed to generate a solid waste (such as goethite residue) that is stockpiled on-site.

Control Practices at Pyrometallurgical Plants

The two pyrometallurgical zinc plants produce acid plant blowdown, furnace (retort, oxide, and Waelz kiln) residue, scrap furnace brick, and a cadmium plant residue. One of these plants has a relatively small solid waste stockpile. The other pyrometallurgical plant has an extremely large stockpile of solid waste. This plant alone generates about 89 percent of the solid waste produced by all primary zinc

*The groundwater monitoring system at this one plant may not be sufficient to adequately monitor leaching from the surface impoundment.

plants(3). Solid waste stockpile sites are selected primarily for convenience. No site preparation is conducted other than clearing and grubbing.

Both plants have surface impoundments. The impoundment at one plant is lined with synthetic material; the impoundment at the other is not lined. At one plant, the impoundment collects acid plant blowdown and plant water. At the other plant, acid plant blowdown is not slurried to the impoundment, but is instead sent to the cadmium plant for further processing. Dredgings from both impoundments are controlled on-site. One plant recycles all dredgings to the process; the other recycles about half of the dredgings and stockpiles the remainder. One of the plants also stockpiles cadmium plant residues on-site.

These plants do not use surface water control by collection and diversion ditching to its fullest potential.[3] Neither do the plants currently use barriers to prevent seepage from solid waste stockpiles, or wells to monitor or collect any seepage or leachate(3).

Hazardous Properties of the Wastes

The Administrator has classified the process wastewater and/or acid plant blowdown treatment sludge, electrolytic anode slimes/ sludges, and the cadmium plant leach residue (iron oxide) as hazardous because of the high levels of toxic cadmium and lead found in the wastes. In EPA's "Assessment of Hazardous Waste Practices in the Metal Smelting and Refining Industry," Calspan Corporation tested samples of the wastes

and performed extraction tests on the wastes using distilled water as the extraction medium (1). The results are as follows:

	Waste Analysis (ppm)		Extract Analysis (ppm)	
	Cd	Pb	Cd	Pb
Sludge from acid plant blowdown (Electrolytic Plant)	<10 <10 550	98 1750 18,100		2.1 1.0
Sludge from acid plant blowdown (Pyrometallurgical Plant)	2000 640	4350 4280	<0.01	1.3
Anode slimes/ sludges	12 1400	170,000 89,000	12	2.0
Cadmium Plant Residue	280	215,000	<0.01	9.0

Calculations of sludge contents from lime-and-settle wastewater treatment also indicate that significant amounts and concentrations of lead and cadmium are present in these wastes (2).

Plant	Contaminants	Percent in Sludge
#1	Cadmium	4.0%
	Lead	2.5%
#2	Cadmium	2.6%
	Lead	1.7%

Cadmium and lead are always expected to be in the sludges after treatment because 1) the treatment processes are designed to remove such elements from the wastewater to meet

effluent standards, and 2) cadmium and lead will not be lost (e.g., volatilized) in the treatment process.

Based on the data presented above, the waste is classified as hazardous because it contains significant concentrations of cadmium and lead which are toxic and because the extraction tests performed on these wastes indicate that the cadmium and lead may be in a soluble form and could be released to the environment in harmful concentrations. The fact that water extractions of the wastes have shown that the wastes could leach potentially hazardous concentrations of toxic metals indicates that under the mildest environmental conditions (e.g., neutral pH rainfall) at a mono-disposal site, the wastes may leach contaminants to the groundwater in concentrations which would be harmful to human health and the environment. Where conditions tend to be acidic, the release of these heavy metals over the lifetime of a landfill is expected to be even higher than indicated by the water extraction data, since cadmium and lead solubilities increase with a decrease in pH (4).[/]

On-site stockpiling is most likely not an environmentally acceptable means of disposing of a waste which contains

---

[/] The Agency has determined to list wastes from primary zinc smelting and refining as a "T" hazardous waste, on the basis of lead and cadmium constituents, although these constituents are also measureable by the EP toxicity characteristic. The Agency believes that there are factors in addition to metal concentrations in leachate which justify the "T" listing. Some of these factors are to the high concentrations of lead and cadmium in actual wastes streams, the non-degradability of these substances and indications of lack of proper management of the wastes in actual practice.

significant concentrations of toxic heavy metals that have been shown to migrate from the waste. Surface water can become contaminated with contaminants from these wastes via runoff from rainfall. Similar hazards exist if these waste are disposed of in improperly managed landfills or surface impoundments; leaching, run-off, or overflow may result in contamination of surface and groundwaters.

The cadmium and lead that may migrate from the waste to the environment as a result of improper disposal practices are heavy metals that persist in the environment and therefore may contaminate drinking water sources for extremely long periods of time. Cadmium is toxic to practically all systems and functions of the human and animal organism(5). Acute poisoning may result from the inhalation of cadmium dusts and fumes (usually cadmium oxide) and from ingestion of cadmium salts(6). Lead is poisonous in all forms; it is one of the most hazardous of the toxic metals because it accumulates in many organisms and the deleterious effects are numerous and severe. Lead may enter the human system through inhalation, ingestion or skin contact. Ingestion of contaminated drinking water is a possible means of exposure to humans as a result of improper management of these wastes. Additional information on the adverse health effects of cadmium and lead can be found in Appendix A.

The hazards associated with exposure to cadmium and lead have been recognized by other regulatory programs. Lead and

cadmium are listed as Priority Pollutants in accordance with §307(a) of the Clean Water Act of 1977. Under §6 of the Occupational Safety and Health Act of 1970, a final standard for occupational exposure to lead has been established (7). Also, a national ambient air quality standard for lead has been announced by EPA pursuant to the Clean Air Act (7).

In addition, final or proposed regulations of the State of California, Maine, Massachusetts, Minnesota, Missouri, New Mexico, Oklahoma and Oregon define cadmium and lead-containing compounds as hazardous wastes or components thereof (8). EPA has proposed regulations that will limit the amount of cadmium in municipal sludge which can be landspread on crop land (9). The Occupational Safety and Health Administration (OSHA) has issued an advance notice of proposed rulemaking for cadmium air exposure based on a recommendation by the National Institute for Occupational Safety and Health (NIOSH) (10). EPA has prohibited ocean dumping of cadmium and cadmium compounds except as trace contaminants (11). EPA has also promulgated pretreatment standards for electroplaters which specifically limit discharges of cadmium to Public Owned Treatment Works (12).

References

1. U.S. EPA, Office of Solid Waste. Assessment of Hazardous Waste Practices in the Metal Smelting and Refining Industry. Calspan Corporation, EPA Contract Number 68-01-2604, April 1977, Volumes II and IV.

2. U.S. EPA, Effluent Guidelines Division, Draft Development Document for Effluent Limitation Guidelines and New Source Performance Standards for the Major Nonferrous Metals Segment of the Nonferrous Manufacturing Point Source Category. Washington, D.C. September, 1979.

3. U.S. EPA, Office of Solid Waste. Assessment of Solid Waste Management Problems and Practices in Nonferrous Smelters. PEDCo Environmental Inc. Washington, D.C. November, 1979.

4. Pourbaix, Marcel. Atlas of Electrochemical Equilibria in Aqueous Solutions, London, Pergamon Press, 1966.

5. Wladbott, G.L. Health Effects of Environmental Pollutants. St. Louis, C.V. Mosby Company, 1973.

6. Gleason, M., R.E. Gosselin, H.C. Hodge, B.P. Smith. Clinical Toxicology of Commercial Products. Baltimore, The Willaims and Wiltkins Co., 1969. 3rd Edition.

7. U.S. Department of Interior, Bureau of Mines. Mineral Commodity Summaries, 1979.

8. U.S. EPA State Regulations File, January 1980.

9. 44 FR 53449.

10. 44 FR 5434.

11. 38 FR 28610.

12. 40 CFR, Part 413.

Response to Comments to Proposed Regulations

Comments were received from three companies pertaining to the listing of wastes from the primary zinc industry. The comments address the following general points:

1. Listed wastes are recycled and not discarded.
2. Listed wastes are being stored on-site but will eventually be recycled.

The Agency has concluded that it does have jurisdiction under Subtitle C of RCRA to regulate wastewater treatment sludges and other waste materials that are used, reused, recycled or reclaimed. Furthermore, it has reasoned that such materials do not become less hazardous to human health or the environment because they are intended to be used, reused, recycled or reclaimed in lieu of being discarded. Although the materials recycled and reclaimed may not pose a hazard, the accumulation, storage and transport of a hazardous waste prior to use, reuse, recycle or reclamation will present the same hazard as they would prior to being discarded. In addition, the act of use, reuse, recycling or reclamation, in many cases, poses a hazard equivalent to that encountered if the waste were discarded. Thus, the Agency believes it has a strong environmental rationale for regulating hazardous wastes that are used, reused, recycled or reclaimed.

For the particular wastes at issue, the Agency recognizes that these wastes for most or all of its existance prior to being recycled is deposited in a surface impoundment when the

potential for leaching of the hazardous constituents is real and significant. Consequently, the waste must be considered a hazardous waste in this environment; to avoid listing it as a hazardous waste would be unjustified. Likewise, if the waste is piled and stored on the land, prior to recycling, the potential of leaching of its hazardous constituents with in to the environment would still prevail and avoiding its regulation would be unjustified.

The key question, therefore, is not whether or not it is a hazardous waste and should be listed as a hazardous waste, but whether or not to what degree it should be regulated during recycling; that is should the recycling process and facility be considered a hazardous waste management operation and facility required to obtain interim status and eventually a permit and required to meet the standards set forth in Parts 264 and 265 of the regulations. At this time, the Agency has deferred regulation of such facilities because it recognizes that the full set of Subtitle C management requirements may not be necessary. As and when it concludes that regulation of these facilities in necessary, it will terminate this deferral and impose either the requirements of Parts 264 and 265 (as well as 122) or special tailored requirements under Part 266.

At this time, applicable requirements of Parts 262 through 265 and 122 will apply insofar as the accumulation, storage and transportation of hazardous wastes that are used,

reused, recycled or reclaimed. The Agency believes this regulatory coverage and the above described deferral of regulated coverage in appropriate to the subject wastes. These sludges are hazardous insofar as they are being accumulated and stored in surface inpoundments and insofar as they may be stored in piles prior to recycling. Therefore, these sludges should be listed as hazardous waste. These sludges may not pose a substantial hazard during their recycling and, even though listed as hazardous waste, this aspect of their management is not now being regulated.

LISTING BACKGROUND DOCUMENT

SECONDARY LEAD SMELTING

Emission control dust/sludge from secondary lead smelting (T)

Waste leaching solution from acid leaching of emission control dust from secondary lead smelting (T)

I. Summary of Basis for Listing

The emission control dust/sludge from reverberatory furnace smelting of secondary lead products is generated when lead, cadmium, and chromium contaminants found in the source materials are entrained in the furnace fumes during the smelting process and subsequently collected by air pollution control equipment. Dry collection methods generate a dust as a solid residue; wet collection methods generate a sludge as a solid residue. The sludge is usually land disposed as a waste. The dust is usually recycled for further lead smelting; before recycling, however, the dust may be leached with acid for zinc recovery, and the resulting waste acid leaching solution containing cadmium, chromium and lead is land disposed. The Administrator has determined that these dusts/sludges and the waste acid leaching solutions from acid leaching of these dusts/sludges are solid wastes which may pose a substantial present or potential hazard to human health or the environment when improperly transported, treated, stored, disposed of or otherwise managed, and therefore should be subject to appropriate management requirements under Subtitle C of RCRA. This conclusion is based on the following considerations:

1) The emission control dusts/sludges contain significant

concentrations of the toxic heavy metals lead, cadmium and chromium.

2) Waste leaching solutions from acid leaching of the emission control dusts/sludges likewise contain significant concentrations of lead, cadmium, and chromium, since the acid leaching medium solubilizes these heavy metals.

3) The hazardous constituents of these waste streams may migrate from the waste in harmful concentrations, since distilled water extraction procedures performed on samples of the emission control dust and sludge leached significant concentrations of cadmium and lead from the sludge and significant concentrations of lead, cadmium, and chromium from the dust.

4) The emission control sludge and the waste leaching solutions are typically disposed of in unlined lagoons, thus posing a realistic possibility of migration of lead, cadmium and chromium to underground drinking water sources. Further, these elemental metals persist in the environment, thereby posing a real danger of long-term contamination.

5) Very large quantities of these emission control dust/sludges are generated annually (7,151,600 metric tons of sludge and 127,158,700 metric tons of dust in 1977) and are available for disposal as solid waste. There is thus greater likelihood of large scale contamination of the environment if these wastes are not managed properly.

I. Industry Profile and Manufacturing Process

Eighty-two plants located in 27 states manufacture secondary lead products. The major production centers are located in the Great Lake States, in Texas and in Louisiana (1,5). Plant locations by state are shown in Table 1.

Plant capacities range from 25,000 to 40,000 metric tons of lead per year (1, 5). The total quantity of lead produced by the secondary lead industry was 769,000 metric tons in 1978 and the estimate for 1979 is 760,000 metric tons (4).

Table 1 (1)

Distribution of Secondary Lead Smelters by State

State	No. of Plants
Alabama	2
California	8
Colorado	2
Delaware	1
Florida	3
Georgia	3
Illinois	7
Indiana	4
Kentucky	1
Louisiana	2
Maryland	1
Massachusettes	2
Michigan	4
Minnesota	1
Mississippi	1
Missouri	2
Nebraska	2
New Jersey	3
New York	4
North Carolina	2
Ohio	6
Pennsylvania	7
Texas	9
Tennessee	2
Virginia	1
Washington	1
Wisconsin	1

Four products are manufactured in the secondary lead industry: refined lead, lead oxide, antimonal lead and lead alloy. Individual plants may produce any or all of the products. As shown in Figure 1, the source materials will vary for each. Discarded batteries comprise the major source material. Other source materials are lead residues, lead slags and scrap iron.

II. Generation and Management of Listed Waste Streams

1. Emission Control Dust/Sludge

Emission control dust/sludge is generated from the manufacture of refined lead, lead oxide, and lead alloy in reverberatory furnaces. In the production process, "soft lead" (low antimony lead) is smelted in a reverberatory furnace from lead residues, scrap lead, and in the case of lead alloy, recycled secondary lead emission control dust is a source material. The soft lead is then further processed to either refined lead or lead oxide. In the scrubbing of reverberatory furnace emissions, cadmium, chromium and lead entrained in the fumes are collected by either wet scrubbing or by baghouse, resulting in a sludge or dust that may be discarded. The Agency attributes the presence of lead, cadmium and chromium in the waste stream to their presence in the source materials. (See p. 10 below confirming the presence of these heavy metals in the waste stream in significant concentrations.)

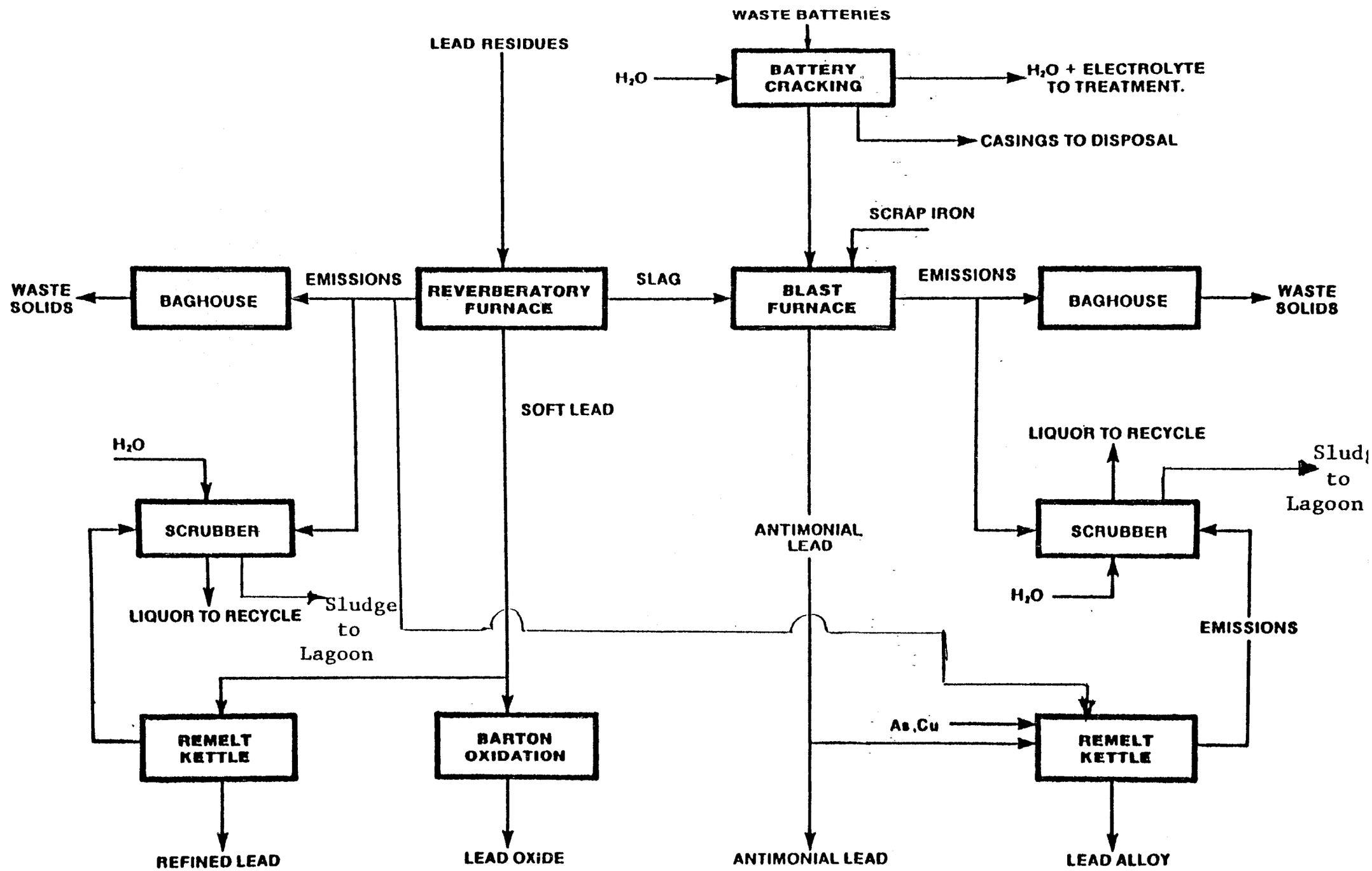

FIGURE 1. SECONDARY LEAD/ANTIMONY SMELTING PROCESS

Three plants in the industry use wet scrubbing which generates a sludge. The sludge is typically disposed in unlined lagoons (1,5).

Dry collection methods (i.e., baghouses) are used by all other plants, generating a dust as a solid residue. This dust is available for disposal or for recycling.

2. Waste Leaching Solution

Emission control dusts are often recycled for use as input material for lead alloy ("white metal") production. The recycling process, however, generates a separate waste stream which is listed along with emission control dust/sludge. Before the dust is recycled to the remelt kettle for lead alloy production, it is leached with dilute sulfuric acid to remove zinc. The waste leaching solution contains chromium, cadmium, and lead leached from the emission control dust.

With regard to the management of the waste leaching solution, EPA is presently aware that a plant in New Jersey receives secondary lead emission dusts for recycling. The dusts are leached, and the waste acid solution is disposed of on-site in unlined lagoons (3). EPA presently lacks information on other waste leaching solution generating locations and management practices.

The Agency wishes to make clear that it is not regulating those wastes which are recycled directly to the process as a hazardous waste. However, if the dusts are stored prior to

recycling, they are defined as solid wastes and are subject to Subtitle C jurisdiction.*

3. Secondary Lead Smelting Industry Waste Generation Levels and Trends

Generation of emission control dust/sludges from reverberatory furnaces is already very substantial, and is expected to increase in the future. Table 2 shows the historic sludge/dust generation from wet and dry scrubbing of reverberatory furnaces (5). Historic quantities are given for 1967 and 1977 as well as minimum and maximum generation projections predictions for 1980, 1984, and 1987. The total dust/sludge generation for 1977 (dry weight basis) was 127,158,700 metric tons. While not all of these materials are disposed (due to dust recycling), it is nevertheless clear that substantial quantities of wastes are generated annually.**

These quantities can be expected to increase--particularly dust generation. First, New Source Performance Standards

*At this time, requirements of Parts 262 through 265 and 122 will apply to the accumulation, storage, and transportation of hazardous wastes that are used, reused, recycled or reclaimed. The Agency believes this regulatory coverage is appropriate to the subject waste. These dusts/sludges are defined as hazardous only if they are being accumulated and stored in piles prior to recycling. These dusts may not pose a substantial hazard during their recycling and, even though listed as a hazardous waste, this aspect of their management is not now being regulated.

**The Agency presently lacks data to estimate the percentage of secondary lead smelting emission control dust which is recycled, although a major percentage of dusts generated may be recycled. In light of the large quantities of dust generated, the Agency believes large amounts of these dusts are managed as wastes, and not recycled.

SECONDARY LEAD INDUSTRY - (dry weight basis) (5)

State	SCC Code	Process	Total Sludge/Dust Generation (10^3 metric tons/year)							
			Historic		Minimum Scenario			Maximum Scenario		
			1967	1977	1980	1984	1987	1980	1984	1987
		Wet Controls								
Illinois	3-04-004-02	Reverberatory furnace	4505.5	6490.8	6924.3	7718.4	8314.0	7755.2	8644.6	9311.7
Kansas	3-04-004-02	Reverberatory furnace	27.5	39.6	42.2	47.0	50.6	47.3	52.6	56.7
Pennsylvania	3-04-004-02	Reverberatory furnace	431.2	621.2	662.7	738.7	795.7	742.2	827.3	891.2
		Total sludge from wet controls	4964.2	7151.6	7629.2	8504.1	9160.3	8544.7	9524.5	10259.6
		Dry Controls								
Alabama	3-04-004-02	Reverberatory furnace	660.0	950.8	1014.3	1130.6	1217.8	1136.0	1266.3	1363.9
Arizona	3-04-004-02	Reverberatory furnace	8.3	11.9	12.7	14.2	15.3	14.2	15.9	17.1
California	3-04-004-02	Reverberatory furnace	360.5	519.3	554.0	617.5	665.1	620.5	691.6	744.9
Indiana	3-04-004-02	Reverberatory furnace	1849.6	2664.6	2842.6	3168.6	3413.1	3183.7	3548.8	3882.7
Lousisiana	3-04-004-02	Reverberatory furnace	2481.2	3574.5	3813.2	4250.5	4578.5	4270.8	4760.5	5127.9
Minnesota	3-04-004-02	Reverberatory furnace	1327.3	1912.1	2039.8	2273.7	2449.2	2284.6	2546.5	2743.1
Mississippi	3-04-004-03	Reverberatory furnace	541.6	780.2	832.3	927.8	999.4	932.2	1039.1	1119.3
Missouri	3-04-004-03	Reverberatory furnace	2173.5	3131.2	3340.3	3723.4	4010.7	3741.1	4170.2	4492.0
Nebraska	3-04-004-02	Reverberatory furnace	7380.8	10633.1	11343.3	12644.2	13619.9	12704.5	14161.5	15254.3
N. Jersey	3-04-004-02	Reverberatory furnace	1856.2	2674.1	2852.7	3179.9	3425.3	3195.0	3561.5	3836.3
Ohio	3-04-004-02	Reverberatory furnace	550.0	792.3	845.2	942.1	1014.8	946.6	1055.2	1136.6
Tennessee	3-04-004-02	Reverberatory furnace	5403.0	778.4	830.4	925.6	997.0	930.0	1036.7	1116.6
Texas	3-04-004-02	Reverberatory furnace	62043.2	89382.4	95352.4	106288.1	114489.9	106794.7	119042.7	128228.7
Virginia	3-04-004-02	Reverberatory furnace	1187.9	1711.4	1825.7	2035.1	2192.1	2044.8	2279.3	2455.2
Washington	3-04-004-02	Reverberatory furnace	340.7	490.8	523.6	583.7	628.7	586.4	653.7	704.1
		Total dust from dry controls	88163.8	120007.1	128022.5	142705.	53716.8	143385.1	159829.5	172162.7
		Total sludge/dust from wet/dry controls	93128.	127158.7	135651.7	151209.1	145319.8	151929.8	169354.	274758.7

will limit particulate emissions from new reverberatory furnaces, resulting in increased collection of particulate wastes. Since baghouses are the most cost-effective means of meeting NSPS, it is expected that dry collection of emissions will continue to be used in the industry and lead to increased generation of emission control dusts (5).

Production of secondary lead is also increasing, again with the likely result of increasing emission control dust/sludge generation. Secondary lead production in fact increased by 200% between 1969 and 1979 (5). Projected dust/sludge generation levels (estimated on a minimum/maximum basis) are 145,319,800 - 274,475,700 metric tons (dry weight) by 1987 (Table 2).*

III. Hazardous Properties of the Wastes

1. Concentrations of Lead, Cadmium and Chromium in the Waste Streams.

Agency data indicates that significant levels of the toxic metals lead, cadmium and chromium are found in the emission control dust/sludge. As indicated in Table 3, lead may comprise as much as 5 - 10% of the entire waste stream. Chromium and lead concentrations are also high (although nowhere near so elevated):

*The Agency does not presently have data showing quantities of waste leaching solution generated. Increased rate of emission control dust recycling may, however, lead to increased generation of waste leaching solution.

Table 3

	Waste Analysis (ppm)		
	Cd	Pb	Cr
Emission Control Sludge From Soft Lead Smelting	340	53,000	30
Emission Control Dust From Lead Alloy Smelting	900	120,000	150

The Agency does not have heavy metal concentration data for the waste leaching solution. Concentrations of these heavy metals in the waste leaching solution, however, can be expected to be significant since the acid leaching medium will solubilize heavy metals fairly aggressively -- indeed, it is intended to perform this function. Some concrete idea of concentrations in the waste leaching solution can be gained from comparision of a distilled water extract of emission control dust presented in Table 4 below. Since lead, cadmium, and chromium are more soluble in acid than in distilled water (7,8), the concentrations of these constituents in the dilute sulfuric acid leaching solution can be expected to be at least as great as, and more likely higher than concentrations in the distilled water extract.

2. Propensity of Lead, Cadmium, and Chromium to Migrate From the Wastes in Dangerous Concentrations and Possible Pathways of Exposure of Improperly Managed Wastes.

The presence of such high concentrations of toxic metals in a waste stream may pose a serious threat to human health and the environment should these toxic metals be released. Furthermore, distilled water extraction test data indicate that these toxic constituents may leach from the waste in harmful concentrations unless the wastes are properly managed. Thus, a distilled water extract from samples of the secondary lead emission control dust and emission control sludge presented in Table 3 indicates that lead, cadmium, and (in the case of the emission dust) chromium may solubilize from the waste in concentrations several orders of magnitude greater than Interim Primary Drinking Water Standards. See Table 4 (1).

Table 4

	Distilled Water Extract Analysis (ppm)		
	Cd	Pb	Cr
Emission Control Sludge From Soft Lead Smelting	5	2.5	.05
Emission Control Dust From Lead Alloy Smelting	230	24.0	12.0
Interim Primary Drinking Water Standard	.01	.05	.05

While the Agency has not performed any analyses of the waste acid leaching solution, as noted above, the Agency believes lead, chromium and cadmium concentrations in waste acid leaching solution will probably be higher than in the distilled water extract of the emission control dust. Furthermore, since the waste leaching solution may be disposed of in liquid form, i.e., with harmful constituents already solubilized and available for migration into the environment, there is a corresponding danger of exposure to harmful concentrations of these metals if the waste is improperly managed.

Thus, these wastes may leach harmful concentrations of lead, cadmium, and chromium even under relatively mild environmental conditions. If these wastes are exposed to more acidic disposal environments, for example disposal environments subject to acid rainfall, these metals would most likely be solubilized to a greater degree than in the distilled water since lead, cadmium and chromium (and their oxides) are more soluble in acid than in distilled water (6,7,8). (See Table 1 indicating that a number of secondary lead plants are located in states known to experience acid rainfall including New Jersey, Ohio, Illinois, and Indiana.)

A further indication of the migratory potential of the waste constituents is the physical form of the waste itself. These waste dust/sludges are of a fine particulate composition, thereby exposing a large surface area to any percolating medium,

and increasing the probability for leaching of hazardous constituents from the waste to groundwater. Waste acid leaching solution, as noted above, is disposed of in liquid form with harmful constituents directly available for migration.

The Agency thus believes that emission control sludge/dust, and waste acid leaching solution may pose a threat of serious contamination to groundwater unless proper waste management is assured. These wastes do not appear to be properly managed at the present time. Thus, present industry practices of disposing of these wastes in unlined lagoons (see pp. 5 and 7 above) may well not be environmentally sound. For example, location of disposal sites in areas with permeable soils could permit contaminant-bearing leachate from the waste to migrate to the groundwater in harmful concentrations. This is a particular concern for lagoon-disposed wastes because a large quantity of liquid is available to percolate through the solids and soil beneath the fill, increasing heavy metal solubilization and migration.

The Agency is also concerned that the lagooned wastes could contaminate surface waters if not managed to prevent flooding or total washout. While the Agency is not aware whether disposal lagoons presently have diking or other control mechanisms to prevent washout, it is certainly possible, given the number of sites, that in some cases, present flood-control measures are inadequate. Nor can proper flood management (or leachate control, for that matter) be assured without regulation.

Another pathway of concern is through airborne exposure to lead, chromium, or cadmium particulates escaping from emission control dust. These particulates could escape if waste dusts are piled in the open, or placed in uncontrolled landfills. Although the Agency is not aware whether waste dusts are managed in this manner, this type of improper management situation appears plausible in light of the large quantities of emission control dust generated annually.

Should lead, cadmium, or chromium escape from the disposal site, they will persist in the environment and therefore may contaminate drinking water sources for extremely long periods of time. Cadmium is bioaccumulated at all trophic levels (9, 10). Lead can be bioaccumulated and passed along the food chain but not biomagnified. (Although bioaccumulation of chromium occurs, the process does not play a major role in determining the fate of chromium.)

3. The Large Quantities of Waste Dust/Sludge Generated Are A Further Factor Supporting a "T" Listing of These Wastes

The Agency has determined to list secondary lead emission control sludge/dust as a "T" hazardous waste, on the basis of lead, chromium, and cadmium constituents, although these constituents are also measurable by the EP toxicity characteristic. Moreover, concentrations of these constituents in an EP extract from waste streams from individual sites might be less than 100 times interim primary drinking water

standards (although the Agency's own extraction data suggests that extract concentrations may exceed the 100 x benchmark for some generators). Nevertheless, the Agency believes that there are factors in addition to metal concentrations in leachate which justify the "T" listing. Some of these factors already have been identified, namely the high concentrations of cadmium and chromium, and especially lead in actual waste streams, the non-degradability of these substances, and indications of lack of proper management of the wastes in actual practice.

The quantity of these wastes generated is an additional supporting factor.

As indicated above, secondary lead emission control sludge/dust is generated in very substantial quantities, and contains very high lead concentrations, as well as elevated concentrations of cadmium and chromium. (See p. 10 above.) Large amounts of each of these metals are thus available for potential environmental release. The large quantities of these contaminants pose the danger of polluting large areas of ground or surface waters. Contamination could also occur for long periods of time, since large amounts of pollutants are available for environmental loading. All of these considerations increase the possibility of exposure to the harmful constituents in the wastes, and in the Agency's view, support a "T" listing.

IV. Hazards Associated With Lead, Chromium and Cadmium

Lead is poisonous in all forms, and is one of the most hazardous of the toxic metals because it accumulates in many

organisms. Its deleterious effects are numerous and severe. Lead may enter the human system through inhalation, ingestion or skin contact.

Chromium is toxic and poses a hazard if contaminated drinking water is ingested by humans. It is also toxic to lower forms of aquatic life. Cadmium is toxic to practically all systems and functions of human and animal organism (9). Acute poisoning may result from the inhalation of cadmium dusts and fumes (usually cadmium oxide) and from ingestion of cadmium salts (10). Additional information on the adverse health effects of cadmium, chromium, and lead can be found in Appendix A.

Lead, cadmium, and chromium historically have been regarded as toxic. Thus, EPA has established maximum concentration limits for lead, cadmium and chromium in effluent limitations guidelines adopted pursuant to Section 304 of the Clean Water Act, and under National Interim Primary Drinking Water Standards adopted pursuant to the Safe Drinking Water Act. Lead also is regulated under the New Source Performance Standards of the Clean Air Act.

The Occupational Safety and Health Administration (OSHA) has set a work place standard for exposure to lead.

In addition, several states that are currently operating hazardous waste management programs specifically regulate cadmium, chromium, and lead containing compounds as hazardous

wastes or components thereof. These states include Maryland, Minnesota, New Mexico, Oklahoma and California (final regulations), and Maine, Massachusetts, Vermont, and Louisiana (proposed regulation).

References

1. U.S. EPA, Office of Solid Waste. Assessment of Hazardous Waste Practices in the Metal Smelting and Refining Industry. Calspan Corporation. EPA Contract Number 68-01-2604, April 1977, Volumes II and IV.

2. U.S. EPA, Effluent Guidelines Division, Draft Development Document for Effluent Limitation Guidelines and New Source Performance Standards for the Major Nonferrous Metals Segment of the Nonferrous Manufacturing Point Source Category. Washington, D.C. September, 1979.

3. U.S. EPA, Office of Solid Waste. Assessment of Solid Waste Management Problems and Practices in Nonferrous Smelters. PEDCo Environmental, Inc. EPA Contract Number 68-03-2577. November, 1979.

4. U.S. Deparment of Interior, Bureau of Mines. Mineral Commodity Summaries, 1980. December, 1979.

5. U.S. EPA, Office of Solid Waste. Background Document for Comprehensive Sludge Study Relevant to Section 8002 (9) of the Resource Conservation and Recovery Act of 1976 (P.L. 94-580). SCS Engineers. EPA Contract Number 68-01-3945. December, 1978. Volume 2, App. E.

6. Handbook of Chemistry and Physics, 52nd Edition. Cleveland, The Chemical Rubber Company, 1971-72.

7. The Merck Index. 8th Edition, 1968.

8. Pourbaix, Marcel. Atlas of Electrochemical Equilibria in Aqueous Solutions, London, Pergamon Press, 1966.

9. Waldbott, G.L. Health Effects of Environmental Pollutants. St. Louis, C.V. Mosby Company, 1973.

10. Gleason, M., R.E. Gosselin, H.C. Hodge, B.P. Smith. Clinical Toxicology of Commercial Products. Baltimore, The Williams and Wilkins Co., 1969. 3rd Edition.