United States
Environmental Protection
Agency

Industrial Environmental Research
Laboratory
Cincinnati OH 45268

EPA-600/2-79-009
January 1979

Research and Development

EPA

Overview of the Environmental Control Measures and Problems in the Food Processing Industries

RESEARCH REPORTING SERIES

Research reports of the Office of Research and Development, U.S. Environmental Protection Agency, have been grouped into nine series. These nine broad categories were established to facilitate further development and application of environmental technology. Elimination of traditional grouping was consciously planned to foster technology transfer and a maximum interface in related fields. The nine series are:

1. Environmental Health Effects Research
2. Environmental Protection Technology
3. Ecological Research
4. Environmental Monitoring
5. Socioeconomic Environmental Studies
6. Scientific and Technical Assessment Reports (STAR)
7. Interagency Energy-Environment Research and Development
8. "Special" Reports
9. Miscellaneous Reports

This report has been assigned to the ENVIRONMENTAL PROTECTION TECHNOLOGY series. This series describes research performed to develop and demonstrate instrumentation, equipment, and methodology to repair or prevent environmental degradation from point and non-point sources of pollution. This work provides the new or improved technology required for the control and treatment of pollution sources to meet environmental quality standards.

This document is available to the public through the National Technical Information Service, Springfield, Virginia 22161

EPA-600/2-79-009
January 1979

OVERVIEW OF THE ENVIRONMENTAL CONTROL MEASURES AND PROBLEMS IN THE FOOD PROCESSING INDUSTRIES

by

J. L. Jones
M. C. T. Kuo
P. E. Kyle
S. B. Radding
K. T. Semrau
L. P. Somogyi
SRI International
Menlo Park, California 94025

Grant No. R804642-01

Project Officer

Kenneth Dostal
Food and Wood Products Branch
Industrial Environmental Research Laboratory
Cincinnati, Ohio 45268

INDUSTRIAL ENVIRONMENTAL RESEARCH LABORATORY
OFFICE OF RESEARCH AND DEVELOPMENT
U.S. ENVIRONMENTAL PROTECTION AGENCY
CINCINNATI, OHIO 45268

DISCLAIMER

This report has been reviewed by the Industrial Environmental Research Laboratory, U.S. Environmental Protection Agency, and approved for publication. Approval does not signify that the contents necesarily reflect the views and policies of the U.S. Environmental Protection Agency, nor does mention of trade names or commercial products constitute endorsement or recommendation for use.

FOREWORD

When energy and material resources are extracted, processed, converted, and used, the related pollutional impacts on our environment and even on our health often require that new and increasingly more efficient pollution control methods be used. The Industrial Environmental Research Laboratory-Cincinnati (IERL-Ci) assists in developing and demonstrating new and improved methodologies that will meet these needs both efficiently and economically.

The report assesses the pollution sources and control measures utilized by the food processing industries, the water pollution control, air pollution control and solid waste management practices of 19 specific segments of the food processing industry. An attempt was made to identify potential toxic substances emission problems.

David G. Stephan
Director
Industrial Environmental Research Laboratory
Cincinnati

PREFACE

This report has been prepared by SRI International for the Food and Wood Products Branch of the Industrial Environmental Research Laboratory in Cincinnati, Ohio, under EPA Grant No. R804642-01-2. This document is not intended to be a definitive work on food processing technology or environmental control in the food industries. It is rather to serve as an informational document for EPA staff members responsible for planning research and development programs for the food industries, for regulatory policy planning and review, and for enforcement activities. It has been assumed that many users of this document will have had no prior experience with or exposure to the food processing industries. An effort has therefore been made to present data in summary form on the industry size and structure, degree of integration, financial structure, as well as to present technical data on production processes and environmental control processes or methods. A unit operations approach has been used in presenting the descriptive matter on production processes.

The groups at SRI responsible for the preparation of this document include:

- Food and Agrosciences Department (L.P. Somogyi)
- Food and Agricultural Industries Department (P.E. Kyle)
- Chemical Engineering Laboratory (J.L. Jones, M.C.T. Kuo, S.B. Radding, and K.T. Semrau).

The body of the report and Appendices A-H were prepared by the staff members of the Chemical Engineering Laboratory. Staff members from the Food and Agrosciences Department and the Food and Agricultural Industries Department prepared the statistical information, industry descriptions, and discussion of processes in Appendices 1-18.

ABSTRACT

In conducting the assessment of the pollution sources and control measures utilized by the food processing industries (those industries listed under SIC 20), the water pollution control, air pollution control and solid waste management practices of 19 specific food processing industries were reviewed. The 19 industries analyzed represent in excess of 75% of the total value of shipments by the food processing industries. One specific objective of the assessment was to identify any potential toxic substances emission problems. The method of approach used in conducting the study was to prepare process descriptions on a unit operations basis for each industry and to identify the sources of emissions and effluents from each major step in the process. These process descriptions along with a general industry description are contained in 18 unpublished appendices available from the EPA Food and Wood Products Branch in Cincinnati, Ohio. The published volume of the report and its eight published appendices discuss the major sources of water pollution, air pollution, and solid wastes from the food processing industries. The appendices address specific topics such as SO_x emissions, polynuclear aromatic hydrocarbons, phenolic compounds, and water reuse (including pesticides).

This report was submitted in fulfillment of Grant No. R 804642-01-2 by SRI International under the sponsorship of the U.S. Environmental Protection Agency. This report covers the period 1 June 1977 to 23 April 1978 and was completed as of 28 April 1978.

CONTENTS

Foreword iii

Preface iv

Abstract v

List of Illustrations ix

List of Tables x

1. Introduction 1
   - Classification of the Agricultural and Food Processing Industries 2
   - Summary Profile of Priority Industries Considered . . . 4
   - Common Unit Operations 8
2. Summary and Conclusions 9
3. Air Pollution Problems 11
   - Combustion of Fuels 11
   - Process Sources of Air Pollutants 14
   - Odor Emissions and Control 20
   - References 32
4. Solid Wastes and Residues 36
   - Relative Magnitude of the Problem 36
   - Solid Waste Distribution in the Food Industries 39
   - Ranking of the Solid Waste Problems 42
   - Canned and Preserved Fruits and Vegetables Industry . . 43
   - Meat Packing Industry 44
   - Dairy Industry 47
   - Miscellaneous Food Processing 48
   - References 51
5. Water Pollution Problems 52
   - Relative Magnitude of the Problem 52
   - Wastewater Distribution in the Food Processing Industries 56
   - Ranking of Raw Wastewater Loads 58
   - Waterborne Toxic Pollutants 58
   - Water Reuse and Recycling 58
   - Canned, Frozen, and Preserved Fruits and Vegetables Industry 60
   - Seafood Processing Industry 65
   - Sugar Processing Industry 69
   - Meat Industries 72

6. Pesticides 76
References 82

Appendices*

A. Sulfur Oxides Emmissions 83
B. Polynuclear Aromatic Hydrocarbons 90
C. Chlorinated Hydrocarbons 96
D. Pesticide Emission from Roasting Operations 100
E. Sources of Phenolic Compounds in Citrus Processing Wastewaters 105
F. Pesticide Levels in Wastewaters from Sweet Potato Processing Operations 108
G. R&D Work on Wastewater Reuse for a Cannery 110
H. R&D Work on Treatment and Reuse of Poultry Processing Wastewater 116

1. Meat Packing Industry
2. Meat Processing Industry
3. Poultry Dressing Industry
4. Egg Breaking and Processing Industry
5. Canned and Preserved Seafood Industry
6. Industrial Fishery Products Industry
7. Industrial Rendering Industry
8. Overview of Fresh, Canned, Frozen, and Dehydrated Fruit and Vegetable Industry
9. Canned, Frozen, and Dehydrated Fruit Processing Industry
10. Canned, Frozen, and Dehydrated Vegetable Processing Industry
11. Specialty Food Processing Industry
12. Cane Sugar Industry
13. Beet Sugar Industry
14. Dairy Industry
15. Wheat, Duram, Dry Corn, Oat, and Rye Milling Industry
16. Wet Corn Milling Industry
17. Rice Milling Industry
18. Edible Fats and Oils Industry

---

*Lettered appendicies are contained in this volume. Numbered appendices are available from EPA Industrial Environmental Research Laboratory, Food and Wood Products Branch, 5555 Ridge Avenue, Cincinnati, Ohio 45268

FIGURES

Number		Page
1	Distribution of Waste for Disposal Among 21 SIC Code Groups	37
A-1	Flow Sheet and Material Balance for Apple Sulfiting and Drying	87
A-2	Flow Sheet and Material Balance for Apricot Sulfuring and Drying	89
D-1	Flow Sheet and Material Balance for Peanut Roasting	100
G-1	Schematic Flow Diagram of Wastewater Treatment System for Snokist Growers	111
H-1	Wastewater Treatment and Water Reclaiming Facilities for Sterling Processing Corporation	117

TABLES

Number		Page
1	Contribution of Industries Under Study to the Total Food Industry	5
2	Number of Establishments and Employees and Shipment Value for Each Industry	6
3	Energy Use Patterns by Type of Energy for the Major User Industries in 1973	13
4	Major Process Sources of Particulates in the Food Processing Industries	16
5	Particulate Emission Factors	17
6	Comparison of Particulate Emissions from Grain Milling and Other Large Industrial Sources of Particulates	18
7	Principal Sources of Nuisance Odors in the Food Processing Industry	21
8	Comparison of Solid Waste Estimates for Manufacturing Industries	38
9	Quantitative Estimates of Solid Waste Production for California, 1969	39
10	Estimated Quantities of Solid Wastes from Food Industry in the United States, 1965	40
11	Estimated Quantities of Solid Wastes from Food Industry in California, 1967	40
12	Summary of Significant Proces-Related Solid Wastes Problems	41
13	Examples of Good Utilization Technology for By-Products or Solid Wastes from Food Industries	42
14	Examples of Technology that May Gain in Popularity in the Future	43
15	Disposal Methods for Canned, Frozen, and Preserved Food Wastes in the United States, 1973	43
16	Industry Solid Residuals by Product and Month	45
17	Industry Solid Residues by Product and Disposal Method	46
18	Industrial Discharges by Industry Group	53

TABLES (Continued)

Number		Page
19	Estimated Volume, BOD_5, and Suspended Solids for Industrial Wastewaters, Before Treatment, 1964	54
20	Ranking of Industrial Water Pollution Problems by Industry, 1964	55
21	Estimated Quantities of Wastewater Volume and Loads from Food Industries in the United States, 1964	56
22	Estimated Quantities of Wastewater Volume and Raw Loads from Major Food Industries in the United States, 1974 . .	57
23	Summary of Significant Wastewater Problems	59
24	Sources and Estimated Volumes of Wastewaters from Processing Steps in Canning of Fruits	60
25	Ranking of Major Commodities by Significance of Raw Waste Food	61
26	Importance Parameters and Weighting Factors for Ranking Commodities	62
27	Comparison of EPA and NCWQ Contractor's Raw Waste Values	63
28	Results of Importance Matrix Analysis	64
29	Percentage of Production by Method of Wastewater Management for Various Plant Categories.	66
30	Unit Waste Loads for Subcategories of Canned and Preserved Seafood Industry	67
31	Estimated Quantities of Raw Materials Processed in Canned and Preserved Seafood Industry in 1968	68
32	Estimated Wastewater Loads from Seafood Processing Industry	68
33	Annual Wastewater Discharge of Sugar Processing Industry	69
34	Representative Character and Volume of Raw Cane Sugar Manufacturing Wastes	70
35	Representative Character and Volume of Beet Sugar Manufacturing Wastes	71
36	Red Meats and Poultry Processing Waste Loads	73
37	Estimated Wastewater Load and Volume for Meat Industry in 1967	73
38	Maximum Allowable Concentration of Selected Insecticides in Raw Citrus and Apple	77

TABLES (Continued)

Number		Page
39	Quantity of Wastewater and Solid Wastes from Selected Food Industries	77
40	Maximum Potential Concentration for Selected Insecticides in Wastewaters from Food Industries	79
41	Half-Lives for Selected Organophosphorous Insecticides	80
42	Maximum Potential Concentration for Selected Insecticides in Solid Wastes from Food Industries	80
A-1	Estimated Hourly Emissions of SO_2 from Sulfuring of Apples and Apricots	86
A-2	Comparison of SO_2 Sources	89
B-1	Hazardous Pollutant Sources	94
D-1	Type and Tolerance Level of Pesticides Applied to Peanuts	101
D-2	Comparison of Pesticide Emission from Peanut Roasting with Occupational Standard	103
E-1	Levels of Phenolic-Type Compounds in Samples Taken at Various Points in Citrus Packinghouses in the Ridge and Indian River Districts	105
E-2	Levels of Free and Conjugated Phenolics as Determined by the 4-Aminoantipyrine Method in Four Common Beverages	106
F-1	DDT Concentration in Treated and Untreated Sweet Potato Wash Water	109
G-1	Pesticide Concentrations in Reused and Tap Water at Snokist Growers' Fruit Processing Plant	113
G-2	Volatile Halogenated Organics--Snokist Growers' Wastewater Reuse Project	114
G-3	Trace Metal Analyses for Reused and Tap Water at Snokist Grower's Fruit Processing Plant	115
H-1	Effectiveness of Wastewater Lagoon System	118
H-2	Effectiveness of Advanced Treatment System	119
H-3	Chemical-Physical Quality of Reclaimed Water	120

SECTION 1

INTRODUCTION

In conducting this preliminary multimedia environmental assessment of the food processing industries, SRI International first conducted an exhaustive literature review. The primary goal of this review was to determine what toxic pollutants (as identified in the Settlement Agreement in the United States District Court for the District of Columbia, dated June 7, 1976) may be emitted from food processing plants and the medium and quantities in which they are emitted. This literature review produced very little information on toxic pollutant sources and no quantitative data on the magnitude of known releases of pesticides. This result was not entirely unexpected by SRI or EPA staff members.

In the main body of the report, we have presented data on industry size, compared environmental problems of the food processing industries relative to other nonfood industries as well as to each other, and identified and quantified, where possible, known or potential problems that have not received attention to date under EPA research and development programs. Those industries that were assigned high and moderate priorities in terms of water pollution, air pollution, solid waste problems, and known or potential toxic waste sources are described in detail in the body of the report and Appendices A through H. In Appendices 1 through 18 each industry is discussed by sector on a commodity or product basis, and individual unit operations in each industry are described.

Each section of the main body of this report deals with a specific type of pollution problem. For water pollution, for example, the magnitude of water pollution problems in the food industries is first compared to that of other nonfood industries. Then water pollution problems are ranked within the food industries. The food industries with major water pollution problems are discussed in detail in the main body of the report, and the wastewater characteristics from major commodities and unit operations are further reviewed in the numbered appendices (1 through 18).*

---

*Available upon request from Environmental Protection Agency, Industrial Environmental Research Laboratory, Food and Wood Products Branch, 5555 Ridge Ave., Cincinnati, Ohio 45268.

CLASSIFICATION OF THE AGRICULTURAL AND FOOD PROCESSING INDUSTRIES

The Department of Commerce has classified the agricultural production and food processing industries into four Standard Industrial Codes (SIC), as listed below.

- SIC Major Group 01: Agricultural Crop Production Industry

  This industry includes establishments (e.g., farms, orchards, greenhouses, nurseries) primarily engaged in the production of crops or plants, vines and trees (excluding forestry operations). It also includes sod farms, mushroom cellars, cranberry bogs, and the production of bulbs, flower seeds, and vegetable seeds. The major crops included in this industry are:

  - Cotton
  - Fruit and Tree Nuts
  - Grains
  - Soybeans
  - Specialty Crops
  - Sugar Crops
  - Tobacco
  - Vegetables and Melons.

- SIC Major Group 02: Agricultural Livestock Production Industry

  This industry includes establishments (e.g., farms, ranches feedlots) engaged in keeping, grazing, or feeding livestock for the sale of livestock or livestock products (including serums) or for livestock increase. Livestock includes cattle, hogs, sheep, goats, poultry of all kinds, and animal specialties such as horses, rabbits, bees, fish, or fur-bearing animals bred in captivity.

- SIC Major Group 07: Agricultural Services Industry

  This industry includes establishments primarily engaged in performing soil preparation services, crop services, veterinary services, other animal services (such as breeding, boarding, grooming), farm labor and management services, and landscape and horticultural services for others on a fee or contract basis.

- SIC Major Group 20: Food and Kindred Products Industry

  This major group includes establishments manufacturing or processing foods and beverages for human consumption, and certain related products, such as manufactured ice, chewing gum, vegetable and animal fats and oils, and prepared feeds for animals and fowl.

The major groups of products in this industry are:

- Bakery Products
- Beverages
- Canned and Preserved Fruits and Vegetables
- Dairy Products
- Fats and Oils
- Grain Mill Products
- Meat Products
- Sugar and Confectionery Products
- Miscellaneous Food Preparations.

This report includes only industries listed under SIC 20. Within SIC 20, the industries may be subdivided into two major groupings as shown below:

- <u>Intermediate Processing</u>

  Vegetable oil processing industry
  Industrial rendering industry
  Sugar industry (cane and beet)
  Flour milling industry
  Rice milling industry
  Malt processing industry
  Wet corn milling industry
  Meat packing industry

- <u>Final Goods Processing</u>

  Animal feed industry
  Meat processing industry
  Poultry processing industry
  Seafood industry
  Dairy products industry
  Beverage industry (malted beverage, wine, liquor, soft drinks)
  Canned and preserved fruits and vegetables industry

Baking industry
Cereal breakfast food industry
Food preparation products industry
Macaroni and spaghetti industry
Roasted coffee industry
Confections industry
Chocolate and cocoa industry.

The industries classified as intermediate processors primarily process farm products into items that may require further processing before final use. There are exceptions, such as refined sugar products and flour. Direct sales from this stage of the process to the consumer, however, are quite small in terms of total production within this classification.

The final goods classification includes firms that produce products that are primarily ready for human consumption.

SUMMARY PROFILE OF PRIORITY INDUSTRIES CONSIDERED

Industries that fall within the scope of the EPA study for "Preliminary Multi-Media Assessment of Pollution Problems in the Food Industries form a major part of the food system in the United States. As measured by the Census of Manufacturers, these industries represent approximately 95.2% of total establishments, 98.1% of total employees, and 98.4% of total shipment value. The industries constituting the priority list for the assessment include:

- Meat Packing
- Meat Processing
- Poultry Dressing
- Egg Breaking
- Vegetable Oil Processing and Edible Fats and Oils
- Industrial Rendering
- Grain Milling (including Flour, Rice, Wet Corn)
- Livestock Food
- Seafoods
- Canned and Preserved Fruits and Vegetables

- Malted Beverages
- Roasted Coffee
- Sugar (Cane and Beet)
- Dairy.

These industries represent approximately 58.2% of total establishments, 63.7% of total employees, and 76.9% of total shipment value. Table 1 shows the contribution of the industries under study to the total food industry. The industries on the priority list were chosen because they are known to represent a very high percentage of the air pollution, water pollution, and solid waste problems.

TABLE 1. CONTRIBUTION OF INDUSTRIES UNDER STUDY TO THE TOTAL FOOD INDUSTRY

	No. of establishments	Average Total Number of employees per year (thousands)	Shipment value ($ millions)
Industries within scope of study	27,100	1,539.1	$ 113,180.5
Priority industries within scope of study	16,689	999.7	88,437.6
Total, all SIC 20 industries	28,192	1,569.9	114,983.5

Source: Census of Manufacturers, 1972.

Detailed information on the number of establishments, average total number of employees per year, and shipment value for each industry is given in Table 2.

The dairy industry possesses the largest number of total estabishments in the industry (4,590, 16.3% of the total). The baking industry has the greatest average number of employees (235.5 thousand, 15% of the total), and the meat packing industry has the greatest shipment value ($23,024.0 million, 20.0% of the total).

TABLE 2. NUMBER OF ESTABLISHMENTS AND EMPLOYEES AND SHIPMENT VALUE FOR EACH INDUSTRY

	SIC No.	Establishments Number	Establishments % of Total	Avg. total no. of Employees per year Number (000s)	Avg. total no. of Employees per year % of Total	Shipment value $ Millions	Shipment value % of Total
Priority industries in the study							
1. Meat packing	2011	2,475	8.8	157.6	10.1	23,024.0	20.0
2. Meat processing	2013	1,311	4.7	58.1	3.7	4,632.4	4.0
3. Poultry dressing	2016	522	2.3	77.6	5.9	3,254.1	3.3
4. Poultry and egg processing	2017	130		14.6		588.1	
5. Canned and cured seafoods	2091	308	2.9	14.8	2.5	719.3	1.5
Fresh and frozen packaged fish	2092	518		24.7		1,061.6	
6. Canned fruits, vegetables, preserved jams and jellies	2033	1,038		89.8		4,043.8	
Dried/dehydrated fruits, vegetables, and soup mixes	2034	178		12.4		607.3	
Frozen fruits, fruit juices, and vegetables	2037	209	9.1	42.9	14.9	1,852.4	10.0
Frozen specialities	2038	435		38.3		1,935.5	
Canned specialties	2032	203		29.1		1,876.6	
Pickled fruits/vegetables	2035	495		20.8		1,166.7	
7. Cottonseed oil mills	2074	115		5.5		458.7	
Soybean oil mills	2075	94	1.2	9.1	1.8	3,357.2	5.3
Other oil mills	2076	31		1.1		252.2	
Shortening and cooking oils	2079	109		12.9		2,068.1	
8. Prepared feeds, nec	2048	2,120	8.3	44.0	3.7	5,037.1	5.6
Dog, cat, other pet foods	2047	221		14.3		1,401.9	
9. & 10. Animal and marine fats and oils	2077	511	1.8	11.5	0.7	764.6	0.7
11. Malted beverages	2082	167	0.6	51.5	3.3	4,054.4	3.5
12. Roasted coffee	2095	213	0.8	12.9	0.9	2,328.7	2.1
13. Cane sugar refining	2062	33	0.1	10.9	0.7	1,742.7	1.5
14. Beet sugar	2063	61	0.2	11.5	0.7	880.2	0.8
15. Flour and other grain mill products	2041	457	1.6	16.1	1.0	2,380.0	2.1
16. Rice milling	2044	57	0.2	4.0	0.3	680.6	0.6
17. Wet corn milling	2046	41	0.1	12.1	0.8	832.3	0.7

(continued)

TABLE 2 (CONTINUED)

	No.	Establishments Number	Establishments % of Total	Avg. total no. of Employees per year Number (000s)	Avg. total no. of Employees per year % of Total	Shipment value $ Millions	Shipment value % of Total
Priority industries in the study							
18. Cereal breakfast foods	2043	47	0.1	12.9	0.9	1,125.5	1.0
19. Creamery butter	2021	231		4.0		808.3	
Cheese--natural and processed	2022	872		25.2		3,195.0	14.2
Condensed and Evaporated milk	2023	283	16.3	12.3	11.8	1,667.8	
Ice cream and frozen desserts	2024	697		21.1		1,244.7	
Fluid milk	2026	2,507		126.1		9,395.8	
Subtotal		16,689	58.2	999.7	63.7	88,437.6	76.9
Other industries in the study							
20. Flavoring extracts	2087	400	1.4	10.1	0.6	1,472.0	1.3
21. Distilled liquor	2085	121	0.4	18.4	1.2	1,797.9	1.6
22. Chocolate and cocoa	2066	48	0.2	10.0	0.6	735.5	0.6
23. Wines	2084	213	0.8	9.4	0.6	865.0	0.7
24. Bread, cake, etc.	2051	3,323	12.9	194.4	15.0	6,152.6	6.9
Cookies, crackers	2052	315		41.1		1,763.5	
25. Macaroni and spaghetti	2098	194	0.7	7.3	0.5	349.6	0.3
26. Confectionary	2065	1,011	3.6	60.7	3.9	2,472.5	2.1
27. Food preparations	2099	2,099	7.5	66.2	4.2	3,647.9	3.2
28. Soft drinks	2086	2,687	9.5	121.8	7.8	5,486.4	4.8
Subtotal		10,411	37.0	539.4	34.4	24,742.9	21.5
Industries not discussed in detail							
Blended and prepared flour	2045	137	0.5	7.9	0.5	704.6	0.6
Malt	2083	40	0.1	1.7	0.1	226.3	0.2
Raw cane sugar	2061	78	0.3	7.5	0.5	427.1	0.4
Chewing gum	2067	19	0.1	6.9	0.4	328.6	0.3
Manufactured ice	2097	818	2.9	6.8	0.4	116.4	0.1
Subtotal		1,092	3.9	30.8	1.9	1,803.0	1.6
Total		28,192	100.0	1,569.9	100.0	114,983.5	100.0

nec = not elsewhere classified.

Source: SRI International.

COMMON UNIT OPERATIONS

The food processing industries are extraordinarily diverse and include the following common unit operations:

- Material handling. Conveying, elevating, pumping, packing, and shipping.
- Separating. Centrifuging, draining, evacuating, filtering, percolating, fitting, pressing, skimming, sorting, and trimming. (Drying, screening, sifting, and washing fall into this category.)
- Heat exchanging. Chilling, freezing, and refrigerating; heating, cooking, broiling, roasting, baking, smoking, and so forth.
- Mixing. Agitating, beating, blending, diffusing, dispersing, emulsifying, homogenizing, kneading, stirring, whipping, working, and so forth.
- Peeling and Size Reduction. Peeling, breaking, chipping, chopping, crushing, cutting, grinding, milling, maturating, pulverizing, refining (as by punching, rolling, and so forth), shredding, slicing, and spraying.
- Forming. Casting, extruding, flaking, molding, pelletizing, rolling, shaping, stamping, and die casting.
- Coating. Dipping, enrobing, glazing, icing, panning, and so forth.
- Decorating. Embossing, imprinting, sugaring, topping, and so forth.
- Controlling. Controlling air humidity, temperature, pressure, and velocity; inspecting, measuring, tempering, weighing, and so forth.
- Packaging. Capping, closing, filling, labeling, packing, wrapping, and so forth.
- Storing. Piling, stacking, warehousing, and so forth.

SECTION 2

SUMMARY AND CONCLUSIONS

In conducting the assessment of the pollution sources and control measures utilized by the food processing industries (those industries listed under SIC 20), the water pollution control, air pollution control and solid waste management practices of 19 specific food processing industries were reviewed in detail. These 19 industries represent in excess of 75% of the total value of shipments by the food processing industries. One specific objective of the assessment was to identify any potential toxic substances emission problems. The method of approach used in conducting the study was to prepare process descriptions on a unit operations basis for each industry and to identify the sources of emissions from each major step in the process. These process descriptions along with a general industry description are contained in 19 unpublished appendices available from the EPA Food and Wood Products Branch in Cincinnati, Ohio. This published report volume with appendices contains the reviews of the major sources of water pollution, air pollution, and solid wastes from the food processing industries. The appendices address specific topics such as SO_x emissions, polynuclear aromatic hydrocarbons(PAH), phenolic compounds, and water reuse (including pesticides).

From this analysis it has been shown that the food processing industries:

- Are not in total a major source of emissions of SO_x, NO_x, particulates, hydrocarbons, or PAH, relative to other major industries. However, individual food processing plants sometimes present fairly severe local problems from emissions of particulates, and are fairly frequent major sources of odors.

- Generally have technology available (although perhaps not applied) to control the emissions of air pollutants. However, process modifications or developments could often be applied to reduce the costs of air pollution control.
- Are major sources of industrial solid wastes or residues.
- In numerous cases are utilizing the solid wastes or residues as a supplementary fuel, as an animal feed, or returning the materials to agricultural land.
- Are major industrial sources of water pollutants as indicated by the conventional parameters of BOD_5 and suspended solids.
- Are minor industrial sources of toxic substances (as specified in the June 1976 settlement agreement in the United States District Court for the District of Columbia) but are faced with problems associated with pesticide residues.
- Have generally been able to treat their wastewaters using biological treatment processes on-site (lagoons, trickling filters or activated sludge systems) in municipal treatment systems, or on land.
- Have unique problems in attempting to implement water reuse and recycle systems because of the nature of the raw materials (often contain pesticide residues on the product surfaces) and the high water quality required to satisfy health standards.
- Are investigating the potential problems associated with pesticide residues (often in cooperation with the EPA or other government agencies). However, not a great deal has been published to date on the specific problems associated with recycle or reuse of solid wastes or water containing pesticide residues.

SECTION 3

AIR POLLUTION PROBLEMS

The gross emissions of particulate matter (e.g., SO_2, NO_x and total hydrocarbons) by the food processing industries are relatively minor when compared with those of other large energy-intensive industries that process materials mechanically or thermally. Nevertheless, air pollution from food processing operations can present substantial--and occasionally acute--local problems. Many of these problems, such as odors, are in the category of nuisances, but a few, such as allergenic effects of grain dust, may present direct hazards to health.

Probably the most pervasive air pollution problem associated with the food industries is the emission of odors. Although certain parts of the food industry are notorious as sources of nuisance odors, most of the industry may emit odors of one kind or another under some circumstances.[2-1,-2] Even food odors that are regarded as pleasant when associated with preparation of a meal may become objectionable when emitted continuously and in large volume. For example, the odor of freshly brewed coffee is regarded by most persons as pleasing, but the same odorous materials may be obnoxious or even nauseating when emitted in large quantities by a commercial coffee roaster.[2-3] Several processes in the food industry produce odors that are particularly obnoxious even in small quantities. Some of these processes, such as inedibles rendering, are widespread in location and well known. Others are well known as odor problems only in a few localities. Onion and garlic drying produces odors that are detectable as much as 30 miles from the source, however, the processing plants are few in number and are currently located only in a few places in California.

COMBUSTION OF FUELS

The food industries rank last among the top six energy-consuming industries listed below.[2-4] They also have the lowest energy consumption per dollar of product value added in processing.

	Total Fuel Use (10^{12} kcal)	Kcal/$ of Value Added in Processing
Primary Metals	1310	40,000
Chemical Industry	1160	35,000
Petroleum Industry	766	140,000
Paper Industry	645	50,000
Stone-Clay-Glass-Concrete	365	40,000
Food Industries	323	10,000

Data on the 1973 energy use patterns by energy source are given in Table 3 for the major energy-consuming food processing industries.[2-5] For the industry group as a whole, less than 10% of the total energy consumed was obtained from burning coal, and less than 7% was obtained from residual oil. Natural gas supplied 48% of the total energy, and purchased electricity supplied 28%. The "clean" sources of energy, natural gas and electricity, are much favored in the food industry when they are available. Only wet cornmilling, beet sugar processing, and soybean oil mills derived substantial fractions (15% or more) of their total energy requirements from coal, and that use pattern may have reflected the geographical location of the particular plants using the coal.

As indicated in Table 3 and the tabulation below, by far the greatest portion of the fuel consumed is used to raise steam for process heating, with much smaller amounts being used to generate electric power and for firing of processes.

Purchased or self-generated electric power	30%
Steam for process heating	65%
Direct firing for process use	5%
	100%

The problems of emissions from industrial boilers and their control are no different in the food industries than in other industries, and therefore, they need not be addressed in this analysis. To the extent that residual oil and coal may be substituted for natural gas, boiler furnace emissions may be substantially increased in the future.

TABLE 3. ENERGY USE PATTERNS BY TYPE OF ENERGY FOR THE MAJOR USER INDUSTRIES IN 1973
(Percent)

SIC No.	Industry	Propane	Middle distillates	Residual fuel oils	Other petroleum products*	Coal	Natural gas	Other fuels†	Purchased electricity	Total
2011	Meat packing	2.5	4.7	6.6	0.2	8.6	46.1	0.0	31.4	100.0
2013	Sausage and processed meat	1.5	8.8	4.3	0.2	0.7	46.7	0.0	38.2	100.0
2026	Fluid milk	1.8	8.6	4.6	2.1	2.9	33.2	0.0	46.6	100.0
2033	Canned fruits and vegetables	2.9	2.4	9.3	Z	3.4	65.9	0.0	16.5	100.0
2037	Frozen fruits and vegetables	1.0	1.3	3.0	Z	3.7	40.8	0.0	50.2	100.0
2042	Prepared animal feeds	3.2	3.5	2.5	1.0	0.4	51.6	0.0	38.0	100.0
2046	Wet corn milling	0.1	5.3	2.0	Z	35.5	43.0	0.0	14.1	100.0
2062	Cane sugar refining	Z	0.6	32.3	Z	0.0	66.4	0.0	0.6	100.0
2063	Beet sugar processing	Z	0.1	5.0	Z	24.9	64.8	4.0	1.3	100.0
2082	Malt beverage	0.7	5.3	11.5	Z	7.0	38.3	0.0	37.2	100.0
2094	Animal and marine fats and oils	0.8	6.5	9.3	0.7	0.6	65.2	0.0	16.6	100.0
2097	Manufactured ice	0.0	3.5	0.0	Z	0.0	11.5	0.0	85.0	100.0
2051	Bread and related products	0.7	16.2	2.1	18.8	Z	34.1	0.0	28.3	100.0
2092	Soybean oil mills	Z	4.0	5.0	Z	16.3	46.8	0.0	27.8	100.0
	Total (weighted averages)	1.3	5.1	6.6	1.9	9.4	47.5	0.4	27.9	100.0

Note: Totals may not add to 100 due to rounding.

*Lubricants and Gasoline.

†Coke.

Source: Reference 2-5.

In some food processing industries, associated wasted products may be usable as boiler fuel. The most notable instance is the use of bagasse as fuel in the cane sugar industry. The potential ash and cinder emissions from bagasse-fired boilers are high enough to require appropriate dust collection equipment.

Direct firing of process vessels is practiced primarily for the roasting or drying of various commodities. In such cases, the combustion products come into direct contact with the materials being processed, and the effluent gases may carry contaminants derived from both the fuel burned and the process material. Where the material being processed is intended for human consumption, at least, a "clean" fuel must be used in direct firing, and the fuel most often used is natural gas. In such cases, the contaminants in the gas stream are derived almost entirely from the process material. In any process involving direct firing, the gaseous and particulate effluents are specific to the process and material involved.

PROCESS SOURCE OF AIR POLLUTANTS

The "noncombustion" air pollution problems that may arise from processing in the food industry are associated with the following types of processes:

Process	Pollution Problem
Mechanical Handling (size reduction, conveying)	Particulates Odors from volatiles
Thermal Processing (roasting, blanching, concentrating, drying, frying and other cooking operations)	Particulates Odors
Preserving and Flavoring (sulfuring, smoking)	Particulates SO_x Odors PAH (toxic)
Extracting and Refining	Hydrocarbons Odors Chlorinated organics
Peeling	Chlorinated organics

Some major process sources of particulate emissions in the food processing industries are summarized in Table 4. Particulate emission factors for these sources are presented, where available, in Table 5. For comparison, the emissions from grain milling operations are shown in Table 6 along with the emissions from Portland cement manufacturing plants and coal-fired power plants.

Particulate control problems in the food industry result mainly from solids handling, solids size reduction, drying, roasting and cooking. Some of the particulates are dusts, but others (particularly those from thermal processing operations) are produced by condensation of vapors and may be in the low-micrometer or submicrometer particle-size range. Particulate collection for numerous sources, such as fish meal driers, deep fat frying, smokehouses, and coffee roasters have been discussed by Danielson.[2-6] With proper equipment selection and installation, all the problems can be adequately handled. Problems with particulate control in the grain milling industry, malting and liquor industry, and the citrus industry are also amenable to solution using currently available particulate collection devices.

The grain milling industry is one of the largest, if not the largest, source of actual or potential dust emissions in the food processing industries. This is particularly true if the category is taken to include the premanufacturing phases of grain handling: grain cleaning and drying, storage and handling at elevators, and custom grinding of feed. These phases are technically not part of the food processing industry as defined in this report (SIC 20, Food and Kindred Products), but fall into the major groups SIC 07, Agricultural Services: SIC 42, Motor Freight Transportation and Warehousing; and SIC 51, Wholesale Trade--Nondurable Goods.

The problem of SO_2 emissions from the sulfuring of fruit is discussed in Appendix A. Our conclusion is that the sulfuring of fruit is not a significant source of SO_2 emissions, relative to other point sources. However, the release of the SO_2 at or near ground level may produce problems near installations.

The potential toxic problems identified fall into four classifications:

(1) Polynuclear aromatic hydrocarbons (PAH) from smokehouses.

(2) Chlorinated organics from extraction and peeling operations.

TABLE 4. MAJOR PROCESS SOURCES OF PARTICULATES IN THE FOOD PROCESSING INDUSTRIES

Industry	Transport	Size reduction	Cleaning and classifying	Roasting	Drying	Cooking	Examples
Meat processing						X	Smoke houses
Vegetable oil processing	X						
Grain milling (dry processes)	X	X	X				Flour mills
Grain milling (wet corn processing)	X	X	X		X		
Livestock food					X		Alfalfa dehydrating and grinding (baghouses)
Livestock fishmeal ind.					X		Fish meal dryers
Malted beverage	X				X		Grain handling, spent grains drying
Distilled liquor							Grain handling, spent grains drying
Roasted coffee			X	X	X		Coffee roasting, stoner and cooler, instant coffee spray dryer
Sugar cane							Bagasse-fired boilers
Canned and preserved fruits and vegetables					X		Citrus peel dryers

Source: SRI International.

TABLE 5. PARTICULATE EMISSION FACTORS*

Industry	Emission factor
Meat processing (smokehouses)	0.3 lb/ton Uncontrolled (D) 0.1 lb/ton Controlled (D)
Vegetable oil processing (soy beans)	7 lb/ton (B)
Grain milling	
Rice	0.69 ~ 5.7 lb/ton†
Wheat flour	3.4 ~ 4.2 lb/ton†
Wet corn	2.2 lb/ton†
Livestock food (meal) (alfalfa dehydration)	60 lb/ton Uncontrolled (E) 3 lb/ton Controlled (E)
Livestock fishmeal	0.1 lb/ton Driers (C)
Malted beverage (spent grains)	8 lb/ton Handling and drying (E)
Distilled liquor (spent grains)	8 lb/ton Handling and drying (E)
Roasted coffee	7.6 lb/ton Direct-fired (B) 4.2 lb/ton Indirect-fired (B)
Sugar cane (bagasse)	22 lb/ton bagasse fiber (D)

*The accuracy of the emission factors is ranked as "A," "B", "C", "D", or "E". "A" is considered excellent, "B" above average, "C" average, "D" below average, and "E" poor.

†SRI-estimated values.

Sources: EPA Compilation of Emission Factors, Second Edition, AP-42; SRI International.

Note: To convert pounds to kilograms, divide by 2.2.

TABLE 6. COMPARISON OF PARTICULATE EMISSIONS FROM GRAIN MILLING AND OTHER LARGE INDUSTRIAL SOURCES OF PARTICULATES

Type of plant	Emission factor	Typical plant size	Particulate emission rate (lb/hr)
Rice milling	0.69 ~ 5.7 lb/ton*	600 cwt/hr	21 ~ 171
Wheat flour milling	3.4 ~ 4.2 lb/ton*	200 cwt/hr	34 ~ 42
Wet corn milling	2.2 lb/ton*	1400 cwt/hr	154
Power plant‡ (coal-fired)	0.1 lb/10^6 Btu†	500 MW	315
Portland cement	0.3 lb/ton of feed	70 tons of feed/hr	21

*SRI-estimated values.

†Federal New Sources Performance Standards.

‡Assume power plant capacity factor of 0.7.

Source: EPA; SRI International.

(3) Pesticides and other possible toxic compounds emitted from roasting or drying operations.

(4) Allergenic materials in grain dust.

Problems 1, 2, and 3 above are discussed in Appendices B, C, and D, respectively.

Estimates of the maximum potential emission of PAH from smokehouses, presented in Appendix B, show that the gross emissions from these industrial sources are extremely small relative to other point sources. Although smokehouses could be the source of airborne particulates and sludges contaminated with PAH, it would be difficult to quantify the actual impact of such discharges. Localized effects from such discharges could be more important.

In Appendix C, all major known and proposed uses for chlorinated solvents in the food industry have been identified. Less than 3% of the total industrial consumption in 1974 of trichloroethylene (TCE) was for food processing and this percentage likely has dropped as methylene chloride has been introduced as a substitute. The food industry is a very minor source of the other previously mentioned toxic pollutants, but their localized effects might be important. Such compounds may be released from plants in both the gas phase and the liquid phase. Air stripping in biological treatment systems is likely to remove the compounds from water rapidly.[2-7,-8]

Estimating the quantities of pesticides emitted from food processing operations requires determining which pesticides are actually used and in what quantity they are present on the commodity as it reaches the processing plant. Little detailed information on either subject appears to be available. Some rough estimates of possible pesticides emissions from peanut roasting (Appendix D) were made in an effort to assess whether such emissions might actually be significant. The indicated pesticide concentrations in the roaster waste gas exceed slightly or moderately the allowable occupational standards for worker exposure, but the resulting concentrations in ambient air after dispersion and dilution of the stack gas would be much lower. It is questionable whether the indicated emissions would be significant even if they proved to be real.

Dusts from grain handling and milling are generally in the nuisance category, but they are also known to produce allergic reactions in sensitive individuals. Emissions of such dusts to the atmosphere may affect sensitive individuals in the general population as well as workers in the grain mills. In a study at the University of Minnesota, Cowan et al[2-9] concluded that there was a possible association between air pollutants from the grain industry nearby and the incidence of acute allergenic asthma among university students. Weill et al[2-10] demonstrated an association between local episodic asthma in New Orleans and allergenic air pollutants emitted from grain elevators in the area.

Although rice hulls contain a significant amount of silica and the soil picked up with the grain during harvesting may contain some free silica, the chance that dust from these sources might present a silica inhalation hazard is so remote as to be negligible. To be dangerous, the material must be crystalline-free silica (not silicates or other such compounds) and must be in the respirable particle-size range (i.e., $\leq$ about 2 μm). The actual quantities of material of this description are likely to be very small. The free silica in rice hulls is amorphous (noncrystalline), and hence not dangerous.

In cotton growing the plants are commonly sprayed with a defoliant before harvesting. Defoliation of the cotton plants makes machine picking of the cotton easier. The defoliants used have generally been organic arsenic compounds. Consequently, the trash (e.g., leaves, stems) collected along with the seed cotton is contaminated with arsenic residues. The outer tips of the cotton fibers will also carry some residual arsenic, but the seeds should be generally well protected from contact with the defoliant. At the cotton gin, the trash is separated from the cotton and is normally burned. During combustion of the trash, at least part of the arsenic enters the offgases and is emitted to the atmosphere.[2-11]

If the arsenic-bearing material did reach the cotton seed, it would present primarily a potential hazard in a food product. Apparently, the existence of any actual hazard has not been reported. The emissions from trash burning are not within the category of food processing industries. Cotton ginning (SIC 0724) falls under Agricultural Services.

ODOR EMISSION AND CONTROL

Odor emissions may occur at almost any stage of food processing, but the most serious ones usually are associated with the thermal processing steps such as cooking, roasting, drying, and evaporative concentration. The waste gases from these operations will usually contain particulate matter and perhaps condensable vapors as well as the malodorous substances. Such particulates and condensable materials complicate the problem of collecting or destroying the malodors. The condensable materials themselves may be malodorous to some degree.

For some particularly malodorous operations (e.g., slaughtering, rendering), the exhaust air from building ventilation may be so contaminated as to be a major source of odor.[2-6] Wastewater treatment ponds are another frequent source of odors, even from processing of materials that are not otherwise particularly objectionable.[2-12,-13] Anaerobic digestion of wastes is a frequent source of hydrogen sulfide emissions,[2-14,-15] although such problems can frequently be alleviated or eliminated by proper design of the treatment system. Aerobic treatment of wastewater may also produce odors.[2-12,-16] Some hydrogen sulfide can be formed and emitted, particularly under conditions of system overload.[2-17] In addition, various organic compounds (some of them malodorous) can be stripped out of solution by the air stream used in aeration.[2-7,-8,-17]

Table 7 lists food industries and processes that are major sources of nuisance odors. These are sources that are well known or cited with some frequency in the literature. The list is not exhaustive; as noted previously, most of the food industries can be sources of odors under

TABLE 7. PRINCIPAL SOURCES OF NUISANCE ODORS IN THE FOOD PROCESSING INDUSTRY

SIC No.	Short Title	Products	Operations
2011	Meat packing plants	Fresh and processed meat; lard; edible tallow and stearin; blood meal	Slaughtering; edible-fats rendering; blood drying; waste treatment; meat smoking; building ventilation
2013	Prepared meats	Processed meats; lard; edible tallow and stearin	Edible-fats rendering; meat smoking; building ventilation
2016	Poultry dressing plants	Dressed and packed poultry and rabbits	Slaughtering; waste treatment; building ventilation
2017	Poultry processing	Processed poultry products	Cooking; smoking; building ventilation; waste treatment
2034	Dehydrated fruits, vegetables	Dried onions and garlic	Drying; building ventilation
2037	Frozen fruits and vegetables	Dried citrus pulp	Pulp drying
2046	Wet corn milling	Gluten meal; gluten feed; germ meal	Fiber drying; gluten drying; germ drying
2047	Dog, cat, and other pet food	Horse meat and other products	Slaughtering of nonfood animals; building ventilation
2048	Prepared feeds, nec	Feather meal; bone meal	Digestion; drying
2051	Bread, cake and related products	Doughnuts	Deep fat frying
2063	Beet sugar	Dried beet pulp	Drying; waste treatment
2066	Chocolate and cocoa products	Cacao beans	Roasting
2077	Animal and marine fats and oils	Animal oils; fish oil; animal meal; fish meal; inedible animal stearin; fish solubles	Digestion; cooking; rendering; evaporation; drying; air-blowing grease or tallow; building ventilation
2082	Malt beverages	Brewers' grain	Drying
2085	Distilled liquor	Distillers dried grain and solubles	Evaporation; drying
2087	Flavoring extracts and syrups, nec	Flavoring extracts, pastes, powders, and syrups	Evaporation; drying
2091	Canned and cured seafoods	Fish: cured, dried, pickled, salted, and smoked	Cooking; drying; smoking; building ventilation
2092	Fresh and frozen packaged fish	Fish: fresh, frozen; prepared and frozen	Cooking; building ventilation
2095	Roasted coffee	Roasted coffee	Roasting
2099	Food preparations, nec	Potato chips; corn chips; French-fried potatoes	Deep fat frying

Source: SRI International.

some conditions. However, many such odor sources can be controlled with modest efforts. The sources in Table 7 are generally those from which the odor emissions are particularly large and/or obnoxious, and for which control entails substantial efforts and engineering skills.

Malodorous Materials

Malodors in the food industry are seldom due to single chemical agents. More commonly, they result from mixtures of chemical compounds that have been only generally identified. Most of the known components are sulfur or nitrogen compounds resulting from decomposition of plant or animal matter. The indefinite nature of the materials makes it difficult to devise odor controls based on highly specific chemical reactions or physical properties such as solubilities.

The malodors result from substances in the gaseous or vapor forms. However, some of the malodorous materials are substances of relatively low volatilities, and may be present in a gas or air stream primarily in the particulate form, that is, as solid particles or liquid droplets. As the gas or air stream carrying the particulate material is diluted by mixture with air (as, for example, following discharge of the gas stream to the atmosphere), the particulate material gradually vaporizes and thus tends to maintain the concentration of malodorous vapor.[2-18] Such particulates, or aerosols, are likely to have been formed by condensation from the vapor state in the source process, and hence tend to be of fine particle size (that is, in the low-micrometer or submicrometer range). Control of such a material may present an entirely different problem than does control of a gas or vapor.

Odor Measurement and Source Inventories

Although specific malodorous materials may be determined by chemical analyses, odor itself is a physiological response of individuals, and the only currently available instrument for measuring odors is the human nose. [2-18] The perceived intensity of an odor diminishes with reduction of the concentration of the malodorous material in the air.[2-18,-19,-20] Below a certain threshold concentration level, the odor is no longer perceived. However, individuals exhibit a wide range of sensitivity to odors, and the sensitivity of even a single individual may vary at different times and under different circumstances. Consequently, the odor threshold value for even a pure chemical compound is at best the average experienced by some group of persons assembled as a test panel.[2-19,-21]

Where odorous materials exist in a mixture they may be synergistic or antagonistic.[2-19] The perceived odor of the mixture may be intensified

or changed in character or the odor of one component may mask the odors of the others. If the odorous materials have widely different threshold levels, the dominant odor may change as the odorized air is diluted.

The perceived odor intensity of a material is proportional to the logarithm of its concentration.[2-19,-22] However, the proportionality factor between the odor intensity and the concentration is a function of the particular material. Therefore, determining the threshold value (the concentration corresponding to zero odor intensity) does not provide information on how the odor intensity may vary with concentration at levels above the threshold.

Because of the logarithmic relationship between intensity and concentration, reducing the odor intensity by a factor of 2 requires reducing the concentration by a factor of 10. Consequently, eliminating an odor or reducing it to a barely perceptible level will frequently call for extremely high efficiencies in removal of the odorous material.

Quantitative measurements of odor are made by a dilution-to-threshold technique.[2-19,-23,-24,-25,-26,-27] The strength of the odor is rated by the number of volumes of odor-free air required to dilute one volume of the odorous air to the threshold level. The "odor unit" is defined as the amount of odor necessary to contaminate 1 ft^3 of odor-free air to the threshold (or barely perceptible) level.[2-25] The concentration of the odor in a gas sample is then defined (in odor units/ft^3) by the number of cubic feet of odor-free air required to dilute 1 ft^3 of the sample to the threshold. The total emission in odor units is the product of the odor concentration and the flow rate of the gas discharged to the atmosphere.[2-19,-26] However, this quantititive method for determination of odor emission is still dependent on the reactions of the persons that make up the panel judging the threshold level.

In theory, this quantitative technique provides a basis for determining the amount of dilution required to bring the emitted odor under threshold concentration, or the degree to which the odor must be removed from the gas steam to deodorize it.[2-18,-20] On the other hand, it provides no basis for estimating the quality of the odor, its objectionability or acceptability, or the odor intensity of the sample at concentrations above the threshold.[2-18,-20] Thus, emission of different types from different sources cannot be compared solely on the basis of the total number of odor units per unit time.

In addition, experience with determination and use of quantitative odor measurements has been variable and contradictory.[2-18,-20,-28,-29] Measurements from different sources are probably of uncertain consistency.

The technique is not accepted universally in all odor-producing industries. For example, the odor problems of the Kraft pulping industry are most commonly described in terms of the mass emissions of reduced sulfur compounds. Only limited data are available on odor units for different industry sources. There are, in fact, no objective means by which the odor problems of different industries can be compared. Notwithstanding the measured quantities of odor, public reactions are heavily dependent on subjective factors that are not measurable.

Process Consideration in Odor Control

General methods are available for controlling essentially any malodorous emissions from food processing. The major problem in control is (as in most other cases of air pollution) primarily economics rather than technology. The control techniques must certainly be adapted to the particular application. From an economic standpoint, the major concern is the volume of waste gas that must be treated rather than the quantity or even the precise type of contaminant present in the gas. The volume of gas determines the size and capital cost of the gas-treating system and largely determines the energy costs and other operating costs. The volume of waste gas is, in turn, determined primarily by the nature of the source process and by the quality of the engineering devoted to the process and emission control systems.

Many odor control and air pollution control problems in the food industries result from the continued existence of old and obsolete processing plants. Many such plants operate on a batch basis, which usually complicates the control system. Also, they were often built with no consideration for future air pollution control, and hence with no provisions for capturing escaping gases and vapors without undue dilution of the gas streams by infiltrating air. New, modern plants can usually be designed so that the volumes of waste gas are minimized, reducing the cost of emission control and perhaps offering opportunities for heat recovery.

Cooking and/or partial evaporation of food products is still commonly performed in open vessels, so that steam and volatiles, including aromas, escape directly to the atmosphere and mix with large volumes of air (e.g., preparation of ketchup, tomato puree). If, however, the cooking operation is conducted in a closed vessel, the vent stream will consist only of a relatively small volume of steam and noncondensable gases, which will be relatively easy to treat. If the off-gas stream is vented through a condenser, the residual gas stream requiring treatment will consist primarily of the small volume of noncondensables.

Food-drying operations usually present inherently greater control problems than cooking or evaporation. Although certain products can be dried by indirect heat transfer methods, most food products and byproducts must be dried by direct contact with heated air or gas, which thereby becomes contaminated with odorous materials. The minimum volume of gas required is set by the maximum initial gas temperature that is permissible and by the quantity of moisture that must be removed from the food product. However, the actual quantity of gas used depends also on the design of the drier, the amount of air infiltration, and a number of other design and operating factors. Good engineering design of the drier system is essential to reduce the volume of gas (and, hence, the cost of waste gas treatment) to a minimum practical level.

Drying and roasting operations probably represent the most difficult and expensive odor control problems in the food industry. Not only are the gas flows generally higher than for other operations, but also the nature of the operation promotes volatilization of the odorous materials into the gas stream.

Another difficult problem is related to "fugitive" emissions, that is, those escaping to the atmosphere by leakage from equipment or arising from storage piles or waste ponds.[2-6] Feed, product, and waste materials tend to decompose and thereby emit malodors. Only scrupulous sanitation and control or protection of such materials will prevent development and emission of odors.

Odor Control Methods

Gas streams containing malodors may be treated either by removing the malodorous material from the gas or by converting the malodors to other materials that are not odorous.[2-22,-32] In some cases, the two methods are combined.

The malodorous materials in the food industries are almost all organic compounds. Hydrogen sulfide, though not an organic compound, is at least combustible. Sulfur dioxide is used directly in fruit sulfuring and drying, and is formed by the combustion of other sulfur compounds such as hydrogen sulfide. However, the threshold concentration level for detection of the sulfur dioxide odor is much higher than for the other materials and the odor itself is less obnoxious.

Removal of odors from gases by scrubbing with water alone is usually ineffectual because the materials are not sufficiently soluble in water to be removed with adequate efficiency. Water scrubbing may be useful, nevertheless, if the gas is at elevated temperatures and contains a high

vapor concentration of a material of relatively low volatility.[2-6,-32] The cooling and scrubbing of the gas may result in condensation and removal of much of the low-volatile material; the scrubber in this case serves primarily as a direct-contact condenser. However, any highly volatile, water-insoluble compounds will be essentially unaffected.

Absorption of odorous compounds by aqueous solutions may be effective if the odor reacts readily with the solution; for example, hydrogen sulfide can be absorbed with high efficiency in solutions of sodium hydroxide or sodium carbonate. Other organic sulfides and mercaptans are usually not acidic enough to react strongly with the basic solutions. Other types of malodors may result from nitrogen compounds (sometimes amines) produced by the decomposition of animal or vegetable proteins. The nitrogen compounds may be more or less basic, indicating that a solution of sulfuric acid might be used as an absorption medium. However, the nitrogen compounds may not be sufficiently basic for the reactions to be effective.

Adsorption by active carbon is usually much more effective in odor control than is absorption, because the adsorption equilibria are generally more favorable and are not dependent on the water solubility of the material being adsorbed.[2-33] However, adsorption is unfavorably affected by elevated temperatures and high water vapor content of the gas stream. The usual method for regenerating the carbon for reuse is to treat it with steam to desorb the adsorbed material. Consequently, adsorption by active carbon is best adapted to treatment of gas streams that are at, or only slightly above, ambient temperatures and that are not saturated with water vapor.

The difficulty of desorbing adsorbed materials from carbon increases with increasing adsorbate boiling point. Hence, high-molecular-weight compounds may be particularly difficult to remove, and may require extended treatment with superheated steam, heating of the carbon under vacuum, and other such extreme measures. Vapors of high-boiling organic compounds that may be condensable at ambient temperatures may make the carbon unusable. If such vapors are present in a hot gas stream, they should be removed to the maximum degree possible by cooling and scrubbing before the gas is admitted to a carbon bed for removal of the more volatile materials.

The chemical conversion of malodorous organic compounds to nonodorous materials is most effectively accomplished by combustion.[2-22,-32] The carbon and hydrogen contents of the compound are converted to carbon dioxide and water. Any sulfur present in the malodorous compounds is converted to sulfur dioxide, and any combined nitrogen is converted to

elemental nitrogen or to nitrogen oxides. However, the resulting sulfur and nitrogen oxides are normally at concentrations too low to exceed specific allowable emission levels, much less to constitute odor problems in themselves.

The efficiency of vapor incineration is determined by the combination of the temperature, the hold time at temperature, and the degree of turbulent mixing of the gases in the incinerator. Many air pollution codes specify that malodorous gases (such as those from rendering plants) should be incinerated for at least 0.5 sec at a temperature of at least 650°C.[2-23] The ease of oxidation of different compounds varies, and for some relatively refractory high-molecular-weight materials a temperature of at least 760°C may be required for high efficiency oxidation. At lower temperatures, some of the material may be only partly oxidized, and the partially oxidized material may be as obnoxious as the original material.

The use of oxidation catalysts in vapor incinerators is intended to initiate oxidation of the contaminants at relatively low temperatures (e.g., 315-425°C) and thus reduce the amount of fuel that must be burned to raise the incinerator to operating temperatures.[2-33] However, the more refractory high-molecular-weight materials are sometimes not readily combusted at the lower temperatures even in the presence of a catalyst. In such a case, a catalyst may be of relatively little or no benefit in relation to its added capital cost.

Vapor incineration is probably the most effective method of odor control for the widest range of types and conditions of malodorous materials. However, the cost of fuel required also tends to make incineration relatively costly unless effective heat recovery can be integrated into the system.[2-32,-34] Designing an incinerator for effective odor control is relatively easy: the major problem is providing for maximum heat recovery. Integrating the heat recovery with the associated process system can be most readily accomplished in the design of a new plant; it may be difficult to incorporate in an existing plant without extensive system modifications. The simplest method of recovering the heat is to preheat the waste gas going to the incinerator. However, there will frequently be additional recoverable heat that will be lost unless it can be used in the process itself.

Because of the cost of thermal oxidation by incineration, there is a continuing effort to use chemical oxidation combined with scrubbing[2-6,-31,-32,-35,-36,-37] which can be cheaper unless large quantities of an expensive chemical oxidizing agent are required. However, the oxidation reactions are specific to the malodorous compounds and to the

chemical oxidizing agents, and the reactions do not proceed as far as in thermal oxidation. Hence, chemical oxidation is neither as effective nor as widely applicable as thermal oxidation.

The most common oxidizing agents used are sodium hypochlorite, potassium permanganate, hydrogen peroxide, ozone, and chlorine. The first three agents are used in solution, and can be effective only after the malodorous material is absorbed into the solution; consequently, they may be effective only if the malodor is fairly soluble. A sparingly soluble material can only be removed with long gas-liquid contact times. Also, the oxidation products must be either readily soluble and thus retained in solution, or else be nonodorous so that they will not be offensive if they reenter the gas stream. For best efficiency, the gas should be prescrubbed with water for cooling and removal of condensable and readily water-soluble materials. In this way, the relatively expensive oxidizing agents will be consumed only in reaction with the more volatile and refractory malodorous compounds. Potassium permanganate is to some degree undesirable because of the precipitation of the reduction product, manganese dioxide, which may have to be removed from the scrubbing water before it can be discharged to a sewer. Hydrogen peroxide is favorable in that its reduction product is water. An excess of hypochlorite may have to be treated before water is discharged to a sewer. However, sodium hypochlorite is much favored because it is reasonably cheap as well as effective.

For water-insoluble malodors, it may be practical to add a gaseous oxidizing agent (ozone or chlorine) to the gas stream to produce a gas-phase reaction, and then scrub the gas to remove the excess reactant and any water-soluble reaction products.[2-38,-39,-40] A sodium hydroxide scrubbing solution is convenient for removing excess chlorine. Excess ozone is more difficult to deal with since it is not highly soluble in water.

Applications of Odor Control

All the odor control methods discussed above have been used in some part of the food industries. The rendering and fish meal industries have received the most attention and have been most extensively covered in the literature.[2-6,-36,-41, to -47] All the basic control techniques have been applied to odors from rendering, at least on an experimental basis. Frequently, there has been no entirely unbiased report on the effectiveness of a given method as actually applied. Since there are multiple sources of odor in rendering plants and varying degrees of effectiveness in capturing the contaminated air or gas for subsequent treatment, it is not generally clear whether the performance limitations are set by

the efficiency of the odor control technique itself or by the efficiency of preliminary captation of the malodorous air and gas. The same is true for most other odor sources in the food industries.

Incineration is particularly favorable for treating relatively small gas streams carrying high concentrations of malodorous materials, particularly where the gas streams are already at somewhat elevated temperatures and contain water-insoluble or high-molecular-weight compounds. If the gas stream is dilute, incineration is still effective but it generally becomes more difficult to use all the available heat in the waste gas.

Adsorption by activated carbon is effective, but the air or gas stream must be carefully pretreated to reduce the temperature to near-ambient levels and to remove solids or high-boiling vapors that would clog the bed of carbon particles or saturate the carbon with materials that would not be readily desorbed. The spent carbon must be regenerated after a cycle of operation. If the system is operated on a gas stream with high concentrations of contaminant, provisions must be made to regenerate the carbon in place. If the contaminant concentration is sufficiently low, it may be feasible to send the carbon out to a custom regeneration service at intervals of a month or more. Active carbon is probably best suited for treating ventilation air from some process equipment and from buildings.

The performance of various scrubbing systems is less predictable than that of the other control techniques. Probably only case-by-case performance tests are capable of determining what scrubbing system, if any, will control a given odor source. In some instances, multistage scrubbers, with different absorbents or reactants in each stage, have reportedly been used successfully to collect different types of malodorous materials.[2-43] This approach requires a fairly complicated scrubber system, but scrubbing has been favored (primarily for economic reasons) for treating relatively large volumes of gas or ventilation air containing moderate concentrations of odors. In other instances, scrubbing with chemical oxidizing agents has been used even for treating smaller gas streams containing high concentrations of odor.

Although achieving control of an odor emission in the food processing industry obviously requires careful selection and design of the control system, the technology for control is certainly available. The inadequacy of many control systems in the past is related primarily to inadequate design and engineering and to a reluctance to undertake the effort and cost required to install an effective system. As discussed above, the difficulty and expense of applying controls is frequently related to the problems of fitting a control system to an old and obsolete process system.

For rendering plants and fish reduction plants, effective control actually starts with use of modern, fully enclosed process systems.[2-6] Control systems have been devised also for other prominent odor sources such as coffee roasters.[2-3,-48] smokehouses,[2-6] deep fat frying,[2-6] and spent-grain drying.[2-38]

Onion and garlic drying plants, although few in number, have presented severe odor problems. In recent years, substantial reductions have been achieved in the odor emissions from some of these plants, although control is not complete. However, essentially no information has been published on the methods adopted for control.

Onions and garlic are dried on continuous through-flow, moving-belt conveyor driers.[2-49] The onions or garlic are deposited on the belt, and heated air is drawn through the porous mass, so that the vegetables are dried to the desired level by the time the belt reaches the end of its travel. The air is heated by direct firing of natural gas. The air may flow either upward or downward through the mesh or perforated belt and bed of vegetables; the direction of flow is usually reversed in consecutive sections of the drier, and part of the air may be recirculated for maximum utilization of heat. The maximum rate of moisture removal, and the maximum rate of odor release occur in the first section of the drier where the moist vegetables have been freshly deposited on the belt.

The temperature of the air used in drying must be limited to avoid damage to the products.[2-49] The air temperature used in the first stage is reported to be about 82°C. In later stages the temperature is reduced to about 54°C or less. Because of the limitation of air temperature, the unit capacity of the air for moisture uptake is also limited. Hence, relatively large volumes of air must be used and exhausted in the drying process. As is usual in such cases, the volume of exhaust air is the principal economic problem in odor control. The rising cost of natural gas encourages maximum use of air recirculation to maximize heat recovery. Nevertheless, the volumes of exhaust air will unavoidably remain relatively large.

Almost the only pertinent literature reference[2-33] mentions the treatment of 472×10^5 cu. cm/sec of exhaust air from an onion drier by beds of activated carbon. However, activated carbon might be better used to treat the lightly contaminated ventilation air from the buildings. Incineration might be used to treat the heavily contaminated exhaust from the first section of the drier, particularly if the vapor incinerator could be integrated with heat recovery in the drier itself. The more lightly contaminated exhaust from subsequent sections of the drier might be scrubbed with sodium hypochlorite solution. The organic sulfide compounds that reportedly are the main constituents of onion and garlic

odors are probably fairly subject to oxidation in hypochlorite solutions, but may not be very soluble in water.

Treatment of the drier exhaust gases with ozone has been proposed. However, a substantial excess of ozone probably would be required, as in other similar efforts at odor control by ozone. Hence, the excess of ozone left in the air would have to be destroyed, as noted above.

At least one company has used scrubbers on the gases from its onion driers, after a previous attempt to use activated carbon. The exhaust gas temperature proved too high for effective use of the carbon, but the scrubbers have evidently been quite effective.

At least one published report[2-50] describes an instance in which the emissions from ketchup and chili sauce processing kettles (falling under SIC 2033) had to be abated. The vinegar and spice odors produced strong complaints from a neighboring residential community. The offgas (superheated steam plus the objectionable vapors) was scrubbed with cold water, condensing about one-quarter of the steam. The removal of the odor and acetic acid was reportedly nearly complete although the exit water stream was near the boiling point. A surface condenser system achieving complete condensation of the steam would probably afford higher control efficiency as well as an opportunity for heat recovery.

Wastewater treatment plants operating on wastes from food processing plants have frequently been sources of nuisance odors.[2-12,-13,-16] At the Sacramento (California) main wastewater treatment plant,[2-12] odors are periodically increased by the inflow of fruit cannery waste. Trickling filters were provided with dome covers and the air flows from them were treated in hypochlorite scrubbers. The hypochlorite scrubbers removed most of the hydrogen sulfide, but did not remove other odors (apparently including skatole, dimethylamine, pyridine, and methylmercaptan) previously masked by the hydrogen sulfide. Activated carbon adsorbers were added to the system to remove these other malodors as well as some chlorine odors from the scrubbers.

At other similar wastewater treatment plants, scrubbing of offgases with potassium permanganate solution is reported to have been effective in destroying odors.[2-16]

Anaerobic lagoons treating meat packing wastes have been a frequent source of hydrogen sulfide nuisance odors. Proposals have been made to provide lagoons with flexible membrane covers and positive gas removal systems.[2-14] The offgases might be incinerated or otherwise treated to destroy the hydrogen sulfide.

REFERENCES

2-1 Rafson, H. J., "Odor Emission Control for the Flavor and Perfume Industry," presented to Flavor Chemists Society, March 3, 1977.

2-2 Rafson, H. J., "Odor Emission Control for the Food Industry," Food Technol. 31 (6): 32-35 (June 1977).

2-3 Anon., "Roast Odors Trapped at GF/Montreal," Food Eng. 45 (10): 123-124 (October 1973).

2-4 Reding, J. T., and B. P. Shepherd, "Energy Consumption--Fuel Utilization and Conservation in Industry," EPA-650/2-75-032d, Environmental Protection Agency, Washington, D.C., August 1975.

2-5 Development Planning and Research Associates, Inc., "Industrial Energy Study of Selected Food Industries," Federal Energy Administration, Contract No. 14-01-0001-1652. Washington, D.C. July 1974. NTIS: PB-237-316.

2-6 Danielson, J. A., Air Pollution Engineering Manual, 2nd Ed., Environmental Protection Agency Publication AP-40, Research Triangle Park, N.C. (May 1973).

2-7 Thibodeaux, L. J., "A Test Method for Component Stripping of Waste Water," EPA-660/2-74-044, U.S. Environmental Protection Agency, Washington, D.C., May 1974.

2-8 Thibodeaux, L. J., and D. G. Parker, "Desorption Limits of Selected Industrial Gases and Liquids from Aerated Basins," paper presented at the National AIChE meeting in Tulsa, Oklahoma (March 1974).

2-9 Cowan, D. W., et al., "Bronchial Asthma Associated with Air Pollutants from the Grain Industry," J. Air Poll. Control Assoc. 13 (11): 546-552 (November 1963).

2-10 Weill, H., et al., "Allergenic Air Pollutants in New Orleans," J. Air Poll. Control Assoc. 15 (10): 467-471 (October 1965).

2-11 Public Health Service, Control and Disposal of Cotton-Ginning Wastes, Public Health Service Publication 999-AP31, Cincinnati, Ohio, 1967.

2-12 Herr, E., and R. L. Poltorak, "Program Goal--No Plant Odors," Water and Sewage Works 121 (10): 56-58 (October 1974).

2-13 Stone, H. W., and J. V. Ziemba, "Libby, McNeill Solves an Odor Problem," Food Eng. 45 (12): 99-100 (December 1973).

2-14 Chittenden, J. A., L. E. Orsi, J. L. Witherow, and W. J. Wells, Jr., "Control of Odors from an Anaerobic Lagoon Treating Meat Packing Wastes." In: Proceedings 8th National Symposium on Food Processing Wastes, EPA-600/2-77-184, Environmental Protection Agency, Cincinnati, Ohio, August 1977, pp. 38-61.

2-15 Willoughby, E., and J. Curnick, "Controls Odors at Low Cost," Food Eng. 44 (10): 107-108 (October 1972).

2-16 Boscak, V., N. Ostojic, and D. Gruenwald, "Odor Problems? Don't Just Hold Your Nose," Water & Wastes Eng. 12 (5): 62-63, 67, 82 (May 1975).

2-17 Engelbrecht, R. S., A. F. Gaudy, Jr., and J. M. Cederstrand, "Diffused Air Stripping of Volatile Waste Components of Petrochemical Wastes," JWPCF 33 (2): 127-135 (February 1961).

2-18 Turk, A., "Industrial Odor Control and Its Problems," Chem. Eng. 76 (24): 70-78 (November 3, 1969).

2-19 Byrd, J. F., and A. H. Phelps, Jr., "Odor and Its Measurement," in Air Pollution, Vol. II, A. C. Stern, ed., 2nd Ed. (Academic Press, New York, 1968).

2-20 Turk, A., "Industrial Odor Control," Chem. Eng. 77 (9): 199-206 (April 27, 1970).

2-21 Benforado, D. M., W. J. Rotella, and D. L. Horton, "Development of an Odor Panel for Evaluation of Odor Control Equipment," J. Air Poll. Control Assoc. 19 (2): 101-105 (February 1969).

2-22 Yocom, J. E., and R. A. Duffee, "Controlling Industrial Odors," Chem. Eng. 77 (13): 160-168 (June 15, 1970).

2-23 American Soc. for Testing and Materials, "ASTM Standard Method for Measurement of Odor in Atmospheres," D1391-57, 1916 Race Street, Philadelphia, Penn.

2-24 Dravnieks, A., "Measuring Industrial Odors," Chem. Eng. 81 (22): 91-95 (October 21, 1974).

2-25 Fox, E. A., and V. E. Gex, "Procedure for Measuring Odor Concentration in Air and Gases," J. Air Poll. Control Assoc. 7 (1): 60-61 (May 1957).

2-26 Mills, J. L., R. T. Walsh, K. D. Luedtke, and L. K. Smith, "Quantitative Odor Measurement," J. Air Poll. Control Assoc. 13 (10): 467-475 (October 1963).

2-27 Schuetzle, D., T. J. Prater, and S. R. Ruddell, "Sampling and Analysis of Emission from Stationary Sources. I. Odor and Total Hydrocarbons, J. Air Poll. Control Assoc. 25 (9): 925-932 (September 1975).

2-28 Byrd, J. F., H. A. Mills, C. H. Schellhase, and H. E. Stokes, "Solving a Major Odor Problem in a Chemical Process," J. Air Poll. Control Assoc. 14 (12): 509-516 (December 1964).

2-29 Turk, A., "Odor Source Inventories," Pollut. Eng. 4 (8): 22-24 (August 1972).

2-30 Walther, J. E., and H. R. Amberg, "Odor Control in the Kraft Pulp Industry," Chem. Eng. Progr. 66 (3): 73-80 (March 1970).

2-31 Turk, A., R. C. Haring, and R. W. OKey, "Odor Control Technology," Environ. Sci. Technol. 6 (7): 602-607 (July 1972).

2-32 Beltran, M., "Engineering/Economic Aspects of Odor Control," Chem. Eng. Progr. 70 (5): 57-64 (May 1974).

2-33 Grandjacques, B., "Carbon Adsorption Can Provide Air Pollution Control with Savings," Pollut. Eng. 9 (8): 28-21 (August 1977).

2-34 Herr, G. A., "Odor Destruction: A Case History," Chem. Eng., Progr. 70 (5): 65-69 (May 1974).

2-35 Anderson, C. E., "Chemical Control of Odors," Pollut. Eng. 4 (8): 20-21 (August 1972).

2-36 Miller, T. L., "Controlling Rendering Plant Odors," Proc. APCA Specialty Conference on Control Technology for Agricultural Air Pollutants, March 18-19, 1974, pp. 81-103.

2-37 Posselt, H. S., and A. H. Reidies, "Odor Abatement with Potassium Permanganate Solutions," I & EC Prod. Res. Develop. 4 (1): 48-50 (March 1965).

2-38 First, M. W., "Control of Odors and Aerosols from Spent Grain Dryers," Proc. APCA Specialty Conference on Control Technology for Agricultural Air Pollutants, March 18-19, 1974, pp. 133-146.

2-39 Quane, D. E. "Reducing Air Pollution at Pharmaceutical Plants," Chem. Eng. Progr. 70 (5): 51-56 (May 1974).

2-40 Riggin, C. W., Jr., "Eliminates Fermentation Odor," Food Eng. 44 (9): 145 (September 1972).

2-41 Bethea, R. M., B. N. Murthy, and D. F. Cary, "Odor Controls for Rendering Plants," Environ. Sci. Technol. 7 (6): 504-510 (June 1973).

2-42 Doty, D. M., R. H. Snow, and H. G. Reilich, "Investigation of Odor Control in the Rendering Industry," EPA-R2-72-088, Environmental Protection Agency, Washington, D.C., October 1972, 152 pp.

2-43 Osag, R. R., and G. B. Crane, "Control of Odors from Inedibles-Rendering Plants," EPA-450/1-74-006, Environmental Protection Agency, Research Triangle Park, N.C., July 1974.

2-44 Snow, R. H., J. E. Huff, and W. Boehme, "Odor Control by Scrubbing in the Rendering Industry," EPA-600/2-76-009, Environmental Protection Agency, Research Triangle Park, N.C. January 1976.

2-45 Strauss, W., "The Development of a Condenser for Odor Control from Dry Rendering Plants," J. Air Poll. Control Assoc. 14 (10): 424-426 (October 1964).

2-46 Teller, A. J., "Odor Abatement in the Rendering and Allied Industries," J. Air Poll. Control Assoc. 13 (4): 148-149, 166 (April 1963).

2-47 Weber, R. L., and W. S. Stinson, "Recently Developed Odor Control System Eliminates 99% of Odors, Saves $300,000 in Equipment Cost," Food Processing 38 (10): 40-41 (September 1977).

2-48 Partee, F., Air Pollution in the Coffee Roasting Industry (Public Health Service Publication 999-AP-9, Cincinnati, Ohio, Rev. 1966).

2-49 Luh, B. S., and J. G. Woodroof, Commerical Vegetable Processing (Avi Publishing Co., Westport, Conn., 1975).

2-50 Anon., "Controlling Processing Odors in Ketchup Operation," Food Production/Management, April 1974.

SECTION 4

SOLID WASTES AND RESIDUES

RELATIVE MAGNITUDE OF THE PROBLEM

This discussion of solid wastes and residues is restricted to the materials that are predominantly organic in nature, such as food scraps, shells or hulls, and wastewater treatment sludges. The distinction between the terms "solid waste" and "residue" may be made precise by definition. Residues are defined here as solid by-products that have some positive value or represent no cost for disposal. These materials that represent a disposal cost are defined as solid wastes. These definitions, however, do not allow simple classification. For many types of materials, local market conditions are quite variable and the material may fall into both categories depending on the specific site, the season of the year or the state of the economy. Hereafter in this report we will use "solid wastes" for all such materials.

Solid waste quantities in the food industry are quite significant. Food industry wastes range from 0.1 to 0.2 lb (0.045 to 0.09 kg)/capita/day and, as shown in Figure 1, represent one of the most significant sources (on a tonnage basis) of industrial solid wastes. The seasonal nature of many sectors of the food industries also compounds the problem. (By comparison, residential and commercial solid waste production averages about 3.5 lb(1.59 kg)/capita/day and industrial sources average about 3.0 lb (1.36 kg)/capita/day.)

Table 8 shows two separate estimates of solid waste quantities in the total United States for manufacturing industries--one by Combustion Engineering (the same source as Figure 1) and the other by the California Department of Public Health. Both estimates indicate that solid wastes from food industries represent a major portion of industrial solid wastes, but the two studies report a considerable difference in absolute waste magnitude. This demonstrates the difficulty in attempting to estimate solid waste quantities for the whole nation.

California is one of the states with highly organized waste-control programs. Table 9 shows quantitative estimates of California industrial solid waste production[3-1] made in 1969. The table shows that solid waste generated from food industries was expected to increase from 1967 to 2000. Solid wastes from food industries are a major concern, not only

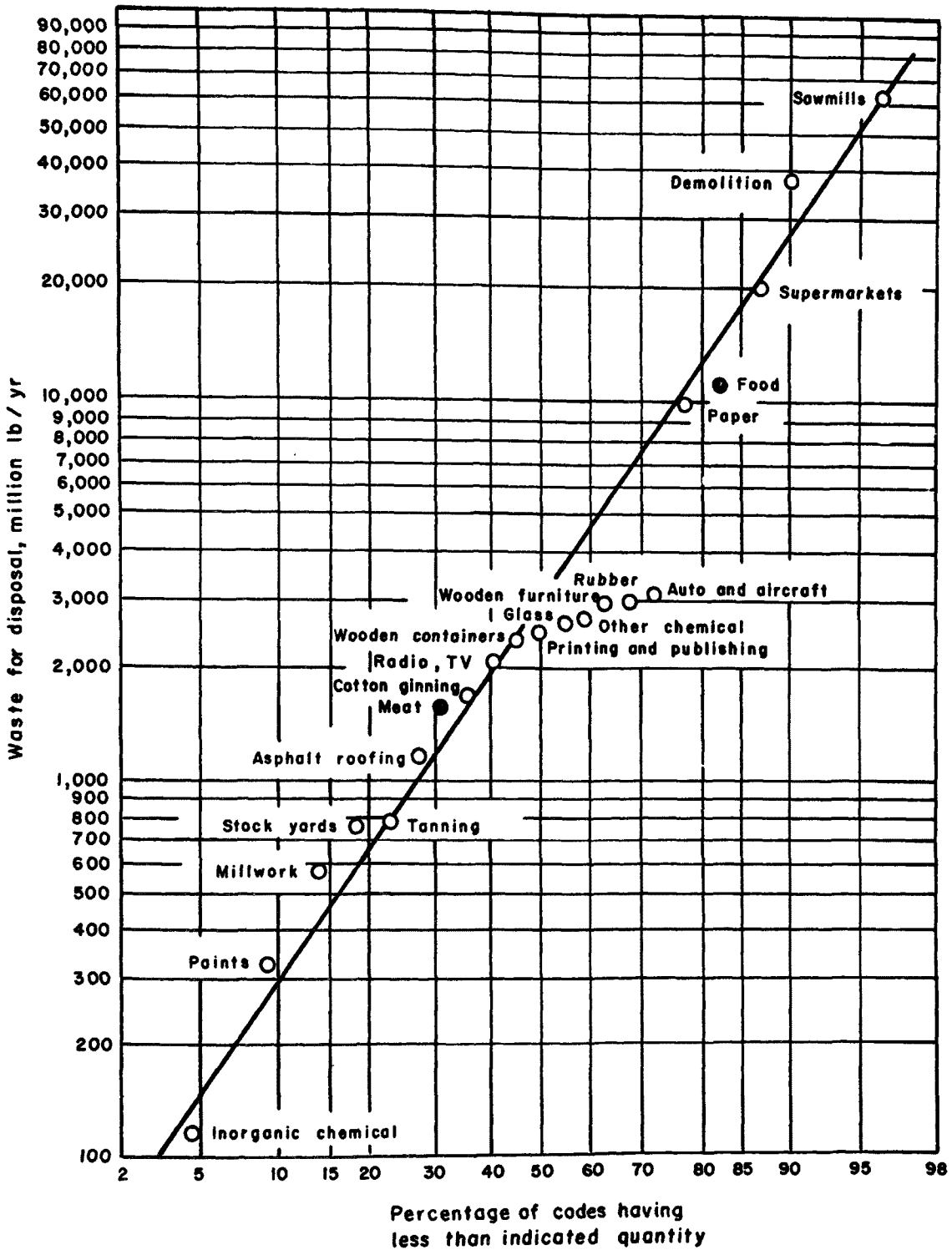

*Standard Industrial Classification.

Source: *Technical-Economic Study of Solid Waste Disposal Needs and Practices Industrial Inventory (Volume II)*, U.S. Department of Health, Education, and Welfare, 1969, p. 7.

Figure 1. Distribution of waste for disposal among 21 SIC code groups.

TABLE 8. COMPARISON OF SOLID WASTE ESTIMATES FOR MANUFACTURING INDUSTRIES

SIC No.	Industry	Waste in Millions of Pounds per Year[Δ] (Total U.S.) Combustion Engineering Study[*]	California Study[†]
19	Ordnance and accessories	711	NA
20	Food and kindred products (excludes meat packing)	14,260 (or, 7.1×10^6 ton)	43,880 (or, 21.9×10^6 ton)
21	Tobacco manufacture	813	-
22	Textile mill products	2,158	340
23	Apparel and textile products	719	650
24	Lumber and wood products	76,107	137,660
25	Furniture and fixtures	3,877	430
26	Paper and allied products	10,189	2,550
27	Printing and publishing	15,221	1,030
28	Chemicals and allied products	6,048	5,050
29	Petroleum and coal products	1,148	5,800
30	Rubber and plastics products	4,927	2,690
31	Leather and leather products	6,325	-
32	Stone, clay and glass products	4,915	2,830
33	Primary metal industries	3,503	9,800
34	Fabricated metal products	7,660	3,300
35	Machinery, except electrical		8,400
36	Electrical equipment and supplies	3,047	4,640
37	Transportation equipment	3,479	3,080
38	Instruments and related products	1,665	-
39	Miscellaneous manufacturing	1,696	-

[*] Technical-Economic Study of Solid Waste Disposal Needs and Practices, Volume II, Industrial Inventory, Combustion Engineering, Inc., for the U.S. Department of Health, Education and Welfare, Public Health Service, Clearinghouse for Federal Scientific and Technical Information, Pub. 1886, Report SW-7c, Pub. PB-187-712, 1969.

[†] California Solid Waste Planning Study, California Department of Public Health, 1969.

[Δ] Divide pounds/year by 2.2 to obtain kilograms/year.

Source: Reference 3-6.

TABLE 9. QUANTITATIVE ESTIMATES OF SOLID WASTE PRODUCTION FOR CALIFORNIA, 1969

Type of industrial waste	Annual quantity (millions of tons) 1967	1985	2000
Food processing	2.1	3.7	6.3
Lumber industry	8.0	2.7	1.0
Chemical and petroleum refining	0.5	0.5	0.8
Manufacturing	3.1	4.8	7.0
Total	13.7	11.7	15.1

Source: Reference 3-1.

because of the large quantities produced, but also because of the potential for environmental pollution. Because of the organic and perishable nature of food-industry solid wastes, the wastes can cause fly and rodent problems, odor problems, and water pollution problems from leachate if waste disposal sites are not well managed.

SOLID WASTE DISTRIBUTION IN THE FOOD INDUSTRIES

Solid wastes from food processing can be divided into three major categories: (1) canned, frozen, and preserved fruits and vegetables, (2) meat processing, and (3) miscellaneous food processing. Table 10 presents 1965-estimated quantities of solid waste from food industries in the United States. Solid waste from the canned, frozen, and preserved fruits and vegetables industry is the major source, representing about 75% of the total. Meat processing and miscellaneous food processing (including dairy products, grain mill products, bakery products, sugar and confection products, fats and oils, beverages, seafood, roasted coffee, etc.) generate about 15% and 12%, respectively, of the total solid wastes in the food industries. Table 11 presents 1967-estimated quantities of solid waste from food industries in California, which represent between 20% and 25% of the total solid wastes from the U.S. food industries. In this table, solid wastes from food processing are divided into five categories: (1) fresh-pack fruits and vegetables, (2) canned, frozen, and preserved fruits and vegetables, (3) meat processing, and (4) dairy industry, and miscellaneous food processing. Fresh-pack fruits and vegetables are not included in Standard Classification Code 20 series; this kind of waste

is commonly classified as agricultural wastes instead of industrial wastes. Again, Table 11 indicates that solid waste from canned, frozen, and preserved vegetables is the major source in the food industries with this category representing about two-thirds of the industrial total (excluding fresh-pack).

TABLE 10. ESTIMATED QUANTITIES OF SOLID WASTES FROM FOOD INDUSTRY IN THE UNITED STATES, 1965

Type of Waste	Amount (tons)
Canned, frozen, and preserved fruits and vegetables	6,120,000
Meat processing	1,200,000
Miscellaneous food processing	1,010,000
Total	8,330,000

Source: Reference 3-7.

TABLE 11. ESTIMATED QUANTITIES OF SOLID WASTES FROM FOOD INDUSTRY IN CALIFORNIA, 1967

Type of Waste		Amount (tons)
Fresh-pack fruits and vegetables		409,500
Canned, frozen, and preserved fruits and vegetables		1,117,500
Canned fruits and vegetables	750,000	
Frozen fruits and vegetables	170,000	
Other preserved fruits and vegetables	197,500	
Meat processing		100,000
Dairy industry		69,000
Miscellaneous food processing		431,000
Total		2,127,000

Source: Reference 3-8.

TABLE 12. SUMMARY OF SIGNIFICANT PROCESS-RELATED SOLID WASTES PROBLEMS

Industry	Food Scraps	Filter or Coagulation Aids	Others	Assessment Category
Vegetable oil processing, edible fats and oils	Hull, extracted flakes (X-3) linter	Filter aid (X-3)		M
Inedible fats and oils	Hull, extracted flakes (X-3)	Filter aid (X-3)		M
Livestock food (blending) (fish meal)				M
Meat packing	Rejects (X-2)		Paunch Manure	H
Seafood	Rejects, shell, bone (X-2)			M
Canned and preserved fruits and vegetables	Peels, rejects (X-1) cores, seeds, pits			H
Malted beverages	Spent grains (X-2)	Filter aid (X-3)		M
Roasted coffee	Coffee grounds (X-3)			M
Sugar (cane) (beet)	Bagasse (X-4) Pulp (X-4)	Coagulation and Filter aids (X-3)		L
Grain milling (flour) (rice) (corn)	Hull (X-3)			M
Flavoring extracts and syrups	Rejects (X-2)			M
Dairy products	Whey (X-2)			H
Distilled liquor	Distiller's grain (X-4)	Filter aid (X-3)		L
Chocolate and cocoa				M
Wine	Stems and Pomace (X-2)	Filter aids (X-3)		M
Baking				L
Cereal breakfast foods				L
Macaroni and spaghetti				M
Confections				L
Soft drinks				L

H = high priority, M = moderate priority, L = low priority.

Source: SRI International.

RANKING OF THE SOLID WASTE PROBLEMS

In Table 12, the industries have been placed into three assessment categories based on the magnitude of known solid wastes problems. Category H industries represent those on which the highest priority should be placed for the assessment. Category H industries are judged to include canned, frozen, and preserved fruits and vegetables, meat packing, and dairy industry. These three industries will be discussed in more detail later. Categories M and L represent a moderate and low priority respectively. Food industries placed in Category M include those with moderate solid waste production such as grain milling, malt beverages, and seafood processing. Food industries placed in Category L include those with low solid waste production such as soft drinks and confections and those with good waste utilization programs such as sugar and distilled liquor. Table 13 shows current examples of good utilization technology, and Table 14 shows examples of technology that may gain in popularity in the future.

TABLE 13. EXAMPLES OF GOOD UTILIZATION TECHNOLOGY FOR BY-PRODUCTS OR SOLID WASTES FROM FOOD INDUSTRIES

Industry	Solid Waste	Utilization
Sugar (cane)	Bagasse	Supplementary fuel, raw material for insulating and building board, paper pulp
Sugar (beet)	Pulp	Cattle feed
Distilled liquor	Distiller's grain	Cattle feed
Edible fats and oils	Soybean extracted flakes	Cattle feed
Dairy industry	Whey	Animal feed, sugar production, alcohol production, protein supplement

Source: SRI International.

TABLE 14. EXAMPLES OF TECHNOLOGY THAT MAY GAIN IN POPULARITY IN THE FUTURE

Industry	Solid waste	Utilization
Edible oils	Cotton { cakes, hull }	Cattle feed
Grain milling	Rice hull Corn stalk	Pyrolysis Supplementary fuel
Fruits and vegetables	Scraps	Anaerobic digestion

Source: SRI International.

CANNED AND PRESERVED FRUITS AND VEGETABLES INDUSTRY

The solid wastes generated by canned, frozen, and preserved fruits and vegetables industries (CPFV) come from the unit operations of washing, size grading, trimming, cutting, sorting, pitting, and peeling processes. The solid wastes include leaves, stems, peels, pits, and miscellaneous rejects.

Table 15 shows a distribution of disposal methods for canned, frozen and preserved food wastes for 1973 in the United States.[3-2] While most solid waste is used for animal feed, significant quantities are being disposed on land or in landfills. Possible contamination of solid wastes by pesticides is discussed in Section 6.

TABLE 15. DISPOSAL METHODS FOR CANNED, FROZEN, AND PRESERVED FOOD WASTES IN THE UNITED STATES, 1973

Method	Tons/year	Percent
Landfill	830,000	9.0
Spread on fields	830,000	9.0
Animal food	7,080,000	76.0
Incineration	18,000	0.2
Wastewater (suspended solids)	320,000	3.4
Other	220,000	2.4
Total	9,300,000	100.0

Source: Reference 3-2.

Tables 16 and 17 are summaries of the solid waste quantities by month and year, and by disposal method for individual commodities within CPFV industry. Of the approximately 30 commodities listed, 5 commodities represent almost 75% of the total:

	Waste (10^3 tons/yr)	Animal Feed (10^3 tons/yr)
Citrus	3080	3000
Corn	1620	1530
White potato	1170	1040
Tomato	520	120
Pineapple	400	360
Totals	6790	6050

Except for the tomato category, approximately 90% or more of the wastes from these commodities are used as animal feed products or additives.

The commodities that represent over 50% of the tonnage of the CPFV solid wastes used in landfill include tomatoes, peaches, and white potatoes. The commodities that represent approximately 60% of the tonnage of CPFV industry solid wastes spread on land include tomatoes, corn, citrus, peaches, apples, beets, and cabbage.

Anaerobic methane fermentation may be suitable for food wastes from caustic-solution peeling operations. Caustic solution can effect swelling and/or solubilization of lignin and can increase the anaerobic biodegradability of food wastes. Both anaerobic digestion and pyrolysis deserve more consideration as disposal methods for food wastes.

MEAT PACKING INDUSTRY

The largest quantity of meat processing wastes is the paunch material from slaughtered cattle. The most common method of disposing of paunch material is spreading it on fields, which often results in numerous fly and odor problems. In the future other options may be considered. Anaerobic methane fermentation of paunch material along with other wastes offers a promising solution to the paunch manure problem and deserves more research.

TABLE 16. INDUSTRY SOLID RESIDUES BY PRODUCT AND MONTH*

Product	Jan	Feb	Mar	Apr	May	Jun	Jul	Aug	Sep	Oct	Nov	Dec	Total	Total Raw Tons
Asparagus			4	14	14	9	2	x					42	120
Lima bean						x	x	5	8	5	x	x	19	120
Snap bean				2	2	7	37	41	35	9	1		130	630
Beet	2			2	1	1	9	16	18	22	14	3	90	270
Broccoli, sprouts, cauliflower	7	6	7	7	6	7	5	13	13	16	16	10	110	260
Cabbage	4	4	4	3	2	1		8	14	16	14	7	76	230
Carrot	6	3	4	5	4	5	9	10	23	33	26	12	140	280
Corn						8	70	620	590	280	48		1620	2,480
Greens, spinach	2	2	8	7	3	1		x	2	2	3	2	33	240
Mushroom	3	3	3	3	3	3	2	2	2	3	3	3	32	67
Pea				1	5	25	28	11	1	x	x	x	74	580
White potato	99	90	92	86	90	62	69	100	110	130	130	120	1170	3,570
Pumpkin/squash							1	12	10	22	10		55	220
Tomato	7	7	6	6	10	70	140	150	110	6	6		520	6,970
Vegetable, misc.	11	12	12	11	17	19	30	38	36	38	32	16	270	1,220
Apple	28	21	15	5	4			2	33	53	64	56	290	1,050
Apricot	x	x	x	x		6	7						16	120
Berry	x	x	x	x	x	3	3	4	2	x			14	200
Cherry					x	1	13	11					26	190
Citrus	330	330	330	330	330	330	210	100	100	160	210	330	3080	7,800
Fruit, misc.	x	x	x	x	1	3	4	8	9	8	2	1	36	150
Olive	1	1	x		x	x	x		2	3	3	x	11	85
Peach						23	84	99	83	3			290	1,100
Pear							14	33	39	25	6		120	410
Pineapple	25	25	30	50	55	55	55	55	30	25			400	900
Plum, prune	1	1	1	x		1	x	x	1	1	x	x	7	27
Dry bean	1	1	1	1	x	x	x	x	x	1	1	1	7	230
Pickle	x	x	x	x	x	8	9	8	8	6	x	x	41	560
Specialty	26	26	26	26	25	24	23	24	24	25	25	26	300	2,500
Clam, scallop	1	1	1	1	1	1	1	1	1	1	1	1	13	90
Oyster	3	3	2	2	x					2	2	3	18	20
Crab	2	2	2	2	1	2	1	2	2	2	2	2	22	30
Shrimp	5	7	7	6	8	5	5	5	5	5	5	5	66	120
Salmon	x	x	x	x	x	8	12	10	8	2	x		40	124
Sardine	x	x	1	1	x	1	1	1	1	x	x	x	6	26
Tuna, misc. seafood	7	7	7	7	8	8	9	10	10	9	9	7	99	520
TOTAL	570	550	560	580	590	700	860	1400	1330	920	640	600	9310	33,500
Nonfood items	39	38	40	43	43	55	69	76	78	73	49	43	650	

*All figures x 1000 tons; rounded (after adding); x = 500 tons or less

Source: Reference 3-3.

TABLE 17. INDUSTRY SOLID RESIDUES BY PRODUCT AND DISPOSAL METHOD*

Product	Total Raw Tons	Fill	Spread	Burn	Total as Solid	Water	Pond	Sewer	Irriga-tion	Total in Liquid	Feed	Other	Total By-Product	Total Residuals	Not Accounted For
Asparagus	120	8	16		24					0	19		19	42	3
Lima bean	120	1	8		10					0	10		10	19	(-3)
Snap bean	630	35	32		67		x	3		3	64		64	130	0
Beet	270	18	46		65			6		6	18		18	90	21
Broccoli, sprouts, cauliflower	260	12	9		21			1		1	91		91	110	x
Cabbage	230	19	44		64		6			6	6		6	76	(-1)
Carrot	280	6	30	x	36			2		2	100	x	100	140	10
Corn	2,480	3	86	x	89			2	1	3	1530		1530	1620	42
Greens, spinach	240	5	3		8		x	x		x	24		24	33	4
Mushroom	67	4	28		32	x				x			0	32	(-2)
Pea	580	3	22	x	24					0	49	x	49	74	4
White potato	3,570	57	28		85	42	2	4		48	1040		1040	1170	170
Pumpkin/squash	220	8	13		22		x	9		9	24	2	25	55	97
Tomato	6,970	250	130	x	380	21	7	x	1	30	120		120	520	150
Vegetable, misc.	1,220	38	71	4	110		1	52		52	110		110	270	x
Apple	1,050	35	54		90	x	x		x	x	110	87	200	290	30
Apricot	120	4	2		6	x				x	7	2	9	16	5
Berry	200	4	5	1	10	2	x	x		2	1		1	14	2
Cherry	190	15	5	x	20				1	1	4	x	4	26	1
Citrus	7,800	4	76		80				1	1	3000	3	3000	3080	310
Fruits, misc.	150	13	13		25			x		x	8	2	10	36	3
Olive	85		1	x	2		x			x		10	10	11	x
Peach	1,100	130	56		180	13	x	1	x	14	50	44	94	290	(-19)
Pear	410	40	32		72	10		x		10	36		36	120	14
Pineapple	900	30			30	5		5		10	360		360	400	0
Plum, prune	27	4	2		6	1				1	x		0	7	1
Dry bean	230	3	2	x	6			x		x	2		2	7	(-1)
Pickle	560	37	3		40			1		1			0	41	(-15)
Specialty	2,500	37	3	8	48		7	18	x	24	210	17	230	300	0
Clam, scallop	90	8	4		12	x				x			0	13	65
Oyster	20				6	2				2		16	16	18	x
Crab	30	5	1			16				16			0	22	1
Shrimp	120		4	3	7	29		12		41	16	x	17	66	20
Salmon	120				0	35				35	4	2	6	40	3
Sardine	26				0					0		6	6	6	x
Tuna, misc. seafood	520				0	x				x	69	30	99	99	91
TOTAL	33,500	830	830	18	1680	180	24	120	5	320	7080 metal	220 other	7300	9310	1010
Nonfood items		300	17	97	410	x	32			32	130	67	200	650	--

*All figures x 1000 tons; rounded (after adding); x = 500 tons or less.

Source: Reference 3-3.

DAIRY INDUSTRY

Dairy whey is a by-product from the manufacture of cheese that has potential as a chemical feedstock. It contains 72% to 75% lactose, which is a reducing dissaccharide composed of two hexose units, glucose and galactose.

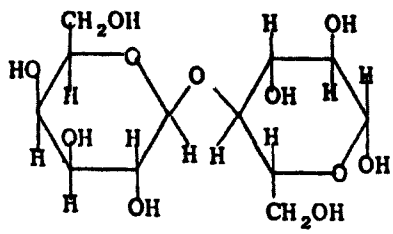

(glucose) (galactose)

β-lactose

The balance of whey is proteins, minerals, and water. An analysis of dried whey is shown below:

	Dried Whey
Lactose	67.7%
Protein (N x 6.25)	12.0
Minerals	10.0
Fats	1.0
Moisture	4.5
Fiber	None

Whey has evolved from waste product status to a self-supporting industry with markets in the food, feed, and pharmaceutical industries. It is currently estimated that about 2 billion pounds of whey solids are being generated annually,[3-9] only two-thirds of which are being recovered and used in commercial products.

MISCELLANEOUS FOOD PROCESSING

Filter Aids and Adsorbents

Of the nonfood scrap-type solid wastes, activated carbon and diatomaceous earth are two of the largest process solid waste products from the food industries. In 1972, activated carbon consumption for sugar decolorization was approximately 22.7 million kilograms (25,000 tons) whereas fats and oils, and other foods and beverages consumed 3.2 million kilograms (3,500 tons), as shown below.

	10^6 Kg/Yr	Tons/Yr
Corn sugar	16	18,000
Cane sugar	4.5	5,000
Beet sugar	1.8	2,000
Fats and oils (Remove odor or color and colloidal impurities; Refining of juices, gelatin, pectin, and vinegar)	2.27	2,500
Alcoholic beverages (wine, whiskey, vodka, others)	0.91	1,000

Powdered activated carbon accounts for 75-80% of the total consumption, and since powdered activated carbon is rarely regenerated because of inadequacies in current technology, practically all of the powdered carbon consumed ends up as a solid waste stream. Granular carbon accounts for 20-25% of the total consumption. Some of the granular carbon consumed is discarded as a solid waste without regeneration and some of the granular carbon consumed represents makeup to replace oxidation losses in systems where thermal regeneration of spent carbon is practiced. If it is assumed that 50% of the granular carbon consumption represents makeup for regeneration systems, then from 25,000 to 26,000 ton/year of activated carbon is disposed of as solid waste.

Diatomaceous earth is widely used as a filter aid in food industries such as sugar, fats and oils, malted beverages, wine, and distilled liquor. The Bureau of Mines[3-4] reported that the total consumption of

diatomaceous earth in 1973 for filter use in food industries, pharmaceutical industry, and municipal water processing was 262 x 10^3 tons. According to Cummins,[3-5] in order of tonnage consumed, filter aids are used primarily for sugar refining, food products, pharmaceutical uses, and water treatment. It is estimated that the usage of diatomaceous earth in food industries in 1973 was between 131 x 10^3 and 262 x 10^3 tons. Waste filter aids probably represent about 7% of the total solid waste for food industry.

Sludge from Biological Treatment of Food Processing Wastewater

Biological treatment of food processing wastewaters results in quantities of biological sludge. The handling of excess sludge is both a technical difficulty and an economic burden. Biological sludge often is hauled away for land disposal. Several recent studies have been concerned with the use of dried sludge as an ingredient in a poultry or cattle feed. This procedure may represent a cost-effective and environmentally acceptable means for handling sludge. The following are two examples of such studies.

Snokist Growers, located at Yakima, Washington, operates a cannery that processes pears, apples and other fruits on a seasonal basis. The cannery can process approximately 270 metric tons of pears per day and about 90 metric tons of apples per day during the processing season. The wastewater treatment system at the plant is an activated sludge process and produces quantities of excess biological solids. The present disposal cost by dewatering and land disposal is approximately $0.07/kg dry solids; disposal of the average 300,000 kg of excess biological solids produced per season is a substantial expense for the processor. In addition, land disposal of sludge may present environmental problems.

During the 1974 processing season, Snokist Growers conducted a project to study sludge dewatering and use by incorporation into a cattle feed ration.[3-4] The inclusion of dewatered biological sludge in a cattle feed ratio did not appear to impair the metabolizability or digestibility of the ration at approximately 5 percent or less biological sludge on a dry matter basis. Carcass quality of the cattle fed on rations containing biological sludge up to a level of 9 percent on a dry matter basis was at least equivalent to that of controls, and possibly improved when the level was 2 to 5 percent of the ration solids. Moreover, the inclusion of dried sludge in cattle feed is more economically advantageous than the present land disposal method.

In the Florida citrus industry, activated sludge process is widely used for wastewater treatment. The handling and disposal of excess activated sludge results in one of the largest operating expenses in the activated sludge process. The Winter Garden Citrus Products Cooperative, under Grant S-801432 sponsored by the EPA, has evaluated the potential of utilizing waste activated sludge as a poultry feed supplement.[3-5] The study showed that the inclusion of up to 7.5 percent sludge in properly formulated diets did not significantly affect poultry performance or meat or egg quality. Moreover, the value of the recovered sludge significantly reduced the total cost of sludge handling. Additional work is currently underway on the concept.

REFERENCES

3-1 California State Department of Public Health, "A Program Plan for Solid Waste Management in California," January 1970.

3-2 Cornelius, James, "Production and Disposal of Industrial Solid Wastes in California," California Vector Views, 16, (5): 35 (May 1969).

3-3 Katsuyama, A. M., Olson, N. A., Quirk, R. L., and Mercer, W. A., "Solid Waste Management in the Food Processing Industry," PB-219 019, NTIS, 1973.

3-4 Esvelt, L. A., Hart, H. H., and Heinemann, W. W., "Cannery Waste Biological Sludge Disposal as Cattle Feed," JWPCF, 48 (12): 2778 (December 1976).

3-5 Jones, R. H., White, J. T., and Damron, B. L., "Waste Citrus Activated Sludge as a Poultry Feed Ingredient," EPA Grant No. 66012-75-001, February 1975.

3-6 EPA Report No. 670/2-73-14, "A Study of Hazardous Effects and Disposal Methods," Volume I (1973).

3-7 Combustion Engineering, Inc., "Technical-Economic Study of Solid Waste Disposal Needs and Practices," Vol II, Industrial Inventory, Report for U.S. Department of Health, Education and Welfare, 1969,.

3-8 Cornelius, J., "Production and Disposal of Industrial Solid Wastes in California," California Vector Views, 10, 5 (May 1969).

3-9 "Fermentation Process Turns Whey Into Valuable Protein," Chemical Engineering, 36-38 (March 17, 1975); "Enzymes May Milk Dairy Wastes," Chemical Week, 37-38 (November 14, 1977); "Dutch Make Alcohol From Whey," Chemical Engineering, 60 (November 7, 1977).

SECTION 5

WATER POLLUTION PROBLEMS

This section compares the water pollution problems in the food industries with those of other nonfood industries. Water pollution problems are ranked within the food industries and those food industries with major water pollution problems are described. The wastewater characteristics and volume from major commodities and unit operations are further reviewed in Appendices A - H.

RELATIVE MAGNITUDE OF THE PROBLEM

Several important points to consider when evaluating the relative impact of the food processing industries on water pollution in the United States are that almost all of the waterborne wastes from the industry are highly biodegradable, and that a high percentage of the food processing plants discharge their wastewater to municipal treatment systems or to onland treatment systems. Even though a large portion of the wastewaters from these food industries are not discharged directly to bodies of water, these industries do represent a significant group of point source dischargers. In the National Water Quality Inventory: 1974 Report to the Congress (EPA-440/9-74-001), it was shown that food industries represent approximately 10% of the "major" and 10% of the "minor" industrial point source discharges to surface waters (see Table 18). In terms of the number of "major" point source discharges, the food industries rank fourth as a category behind chemical and allied products, paper and allied products, and electric and gas utilities. On the average, the BOD_5* and suspended solids concentrations in wastewaters from food processing plants are considerably greater (by a factor of 10) than those of domestic sewage. This fact is very significant because of the large number of food processing plants that discharge to municipal treatment plants in moderate or small size communities. Even in some large cities like St. Louis, MO, Milwaukee, WI (brewers), Sacramento, CA, and San Jose, CA (fruit and vegetable processors), food industries contribute a very substantial portion of the BOD load in wastewater treatment plants. The average wastewater flow from all food processing industries in the United States is about 60.6 liters/capita/day as compared to per capita municipal loads of about 454.2 liters/capita/day. BOD_5 and suspended solids loads from the food processing industry wastewaters are equivalent

---

*Biochemical oxygen demand measured over a 5-day period.

TABLE 18. INDUSTRIAL DISCHARGES BY INDUSTRY GROUP

Industry	Number of surface water dischargers		
	Major	Minor	Total
Agriculture – crops	2	32	34
Agriculture – livestock	4	26	30
Agriculture – other	19	347	366
Metal mining	45	396	441
Coal mining	44	1,154	1,198
Oil and gas mining	28	1,226	1,254
Nonmetallic mineral mining	62	1,034	1,096
Meat products*	54	299	353
Dairy products *	11	349	360
Preserved fruits and vegetables*	50	330	380
Grain mill and bakery products*	16	118	134
Sugar and confectionary products*	78	61	139
Seafood products*	39	598	638
Miscellaneous food and beverages*	57	377	434
Textiles	151	458	608
Lumber and wood products	31	477	508
Paper and allied products	407	255	662
Printing and publishing	0	50	50
Chemicals and allied products	522	821	1,343
Petroleum and coal products	136	279	415
Rubber and miscellaneous plastics	15	380	395
Leather and leather products	29	26	55
Stone, clay, and glass products	71	1,041	1,112
Iron and steel	142	281	423
Nonferrous	66	247	313
Miscellaneous primary metal products	4	41	45
Fabricated metal products	149	742	891
Electric and nonelectric machinery	39	675	714
Transportation equipment	49	277	326
Other manufacturing	6	192	198
Railroad transportation	9	355	364
Other land transportation	0	132	132
Water transportation	0	102	102
Air transportation	3	30	33
Miscellaneous transportation	3	46	49
Communication	0	9	9
Electric and gas utilities	392	2,397	2,789
Water and sanitary services	22	1,504	1,526
Wholesale and retail trade	4	1,166	1,170
Finance, insurance, and real estate	0	309	309
Other services	1	1,069	1,070
Government	24	616	640
Nonclassifiable	17	1,344	1,361
Totals	2,801	21,668	24,469
Food Industries Totals	305	2,132	2,438

*Food Industries.

Source: Reference 4-1.

to about 0.05 kg/capita/day and 0.7 kg/capita/day, respectively, as compared to 0.08 kg/capita/day and 0.09 kg/capita/day for untreated domestic sewage

Table 19 shows estimated of wastewater volume, BOD_5, and suspended solids loads for all major water-using manufacturing industries, and

TABLE 19. ESTIMATED VOLUME, BOD_5, AND SUSPENDED SOLIDS FOR INDUSTRIAL WASTEWATERS, BEFORE TREATMENT, 1964

Industry	Waste-water volume (10^9 gal)[a]	Process water intake (10^9 gal)[a]	BOD_5 (10^6 lb)[b]	Suspended solids (10^6 lb)[b]
Food and kindred products	690	260	4,300	6,600
Textile mill products	140	110	890	N. E.
Paper and allied products	1,900	1,300	5,900	3,000
Chemical and allied products	3,700	560	9,700	1,900
Petroleum and coal	1,300	88	500	460
Rubber and plastics	160	19	40	50
Primary metals	4,300	1,000	480	4,700
Blast furnaces and steel mills	3,600	870	160	4,300
All other	740	130	320	430
Machinery	150	23	60	50
Electrical machinery	91	28	70	20
Transportation equipment	240	58	120	N. E.
All other manufacturing	450	190	390	930
All manufacturing*	13,100[Δ]	3,700	22,000	18,000
For comparison:				
Sewered Population of US	5,300[+]		7,300[±]	8,800[δ]

*Columns may not add, due to rounding.
[+]120,000,000 persons x 120 gal x 365 days.
[±]120,000,000 persons x 1/6 lb x 365 days.
[δ]120,000,000 persons x 0.2 lb x 365 days.
[Δ]Includes cooling water.

a) 1 gallon equals 3.785 liter.
b) 1 pound equals 0.454 kilograms.

Source: Reference 4-2.

Table 20 shows the 1964 rankings of industries based on total wastewater volume, BOD_5 load, and suspended solids load, respectively. Table 20 indicates that although food industries produce a medium ranked volume of wastewater among the manufacturing industries, they produce high loads of raw BOD_5 and suspended solids.

TABLE 20. RANKING OF INDUSTRIAL WATER POLLUTION PROBLEMS BY INDUSTRY, 1964

Industry	Based on total wastewater volume	Based on BOD_5 loads (before treatment)	Based on suspended solids loads (before treatment)
Metal and metal products	1	6	2
Chemical and allied products	2	1	4
Power production	N.A.	N.A.	N.A.
Paper and allied products	3	2	3
Petroleum and coal	4	5	6
Food and kindred products	5	3	1
Machinery and transportation equip.	6	8	7
Stone, clay, and glass products	8	–	–
Textile mill products	10	4	–
Lumber and wood products	11	–	–
Rubber and plastic products	9	9	8
Miscellaneous industrial sources	7	7	5
Joint industrial-municipal wastes	–	–	–
Feed lots	–	–	–
Other (cost benefits, residuals)	–	–	–

N.A. = not available. Source: Reference 4-3.

WASTEWATER DISTRIBUTION IN THE FOOD PROCESSING INDUSTRIES

Table 21 presents estimated wastewaters volumes and contaminant loads for 1964 for the U.S. food industries, which are divided into five major categories. In 1964, sugar refining had the highest wastewater load with both wastewater volume and BOD_5 load equal to one-third of the total for all the food industries. Suspended solids loadings from sugar refining represented two-thirds of the total industry load. Wastewaters from canned, preserved, and frozen fruits and vegetables, meat products, and dairy products were also very significant.

TABLE 21. ESTIMATED QUANTITIES OF WASTEWATER VOLUME AND LOADS FROM FOOD INDUSTRIES IN THE UNITED STATES, 1964

Industry	Wastewater volume (10^9 liters)	BOD_5 (10^6 kg)	Suspended solids (10^6 kg)
Meat products	375	291	291
Dairy products	220	182	105
Canned, preserved, and frozen food	329	545	273
Sugar refining	833	636	2,273
Miscellaneous	833	305	50
	2,590	1,959	2,992

Source: Reference 4-2.

Table 22 presents estimated volume and loads of wastewater for 1974 in U.S. food industries. Comparison of Tables 21 and 22 shows the following:

(1) Estimated wastewater volumes and BOD_5 loads from the sugar refining industry decreased significantly from 1964 to 1974. This is due to great improvements in in-plant practices, process-water reuse, sugar recovery.

However, the sugar refining industry is still the major source of suspended solids load in the food industries.

(2) The CPFV industry produces the largest volume of wastewater in food industries.

(3) The meat industry and the malt beverage industry produce the major portion of the food industries' BOD_5 load.

TABLE 22. ESTIMATED QUANTITIES OF WASTEWATER VOLUME AND RAW LOADS FROM MAJOR FOOD INDUSTRIES IN THE UNITED STATES, 1974

Category	Industry	Wastewater volume (10^9 liters)	BOD_5 (10^6 kg)	Suspended solids (10^6 kg)
H	Meat	307	331	NA
	Dairy	212	182	91
	CPFV	492	91	68
	Sugar	341	68	455
	Malt beverage	151	205	82
	Seafood	49	45	43
M	Grain milling (wet corn)	0.04	47	24
	Malt industry	19	12	2.27
	Flavoring, extracts, syrups	NA	11	0.91
	Distilled liquor	6.74	4.68	4.68
L	Soft drink	18	4.05	-
	Coffee	1.89	1.8	0.45

Notes: N.A = not available.
H = High priority, M = moderate priority, L = low priority.
Source: Reference 4-4.

RANKING OF RAW WASTEWATER LOADS

In Table 23, the industries have been placed into three categories based on the magnitude of known raw wastewater loads, using the data on wastewater volume, BOD_5, and suspended solids from Table 22. Category H (high priority) industries include CPFV, meat, dairy, sugar, malt beverage and seafood. Four of these industries will be discussed in more detail in the following sections. Categories M and L represent moderate and low priority industries, respectively.

WATERBORNE TOXIC POLLUTANTS

The possible waterborne toxic pollutants in the food industry may include pesticides that are removed from the surface of commodities during washing operations, solvents used for extraction (see Appendix C on chlorinated hydrocarbons), PAH contained in wastewaters from washing of smokehouses (see Appendix B on PAH), disinfecting chemicals and fungicides applied to commodities or used in the washing of vessels and other equipment, and naturally occurring phenolic compounds present in specific commodities (See Appendix E on Citrus Processing). The most pervasive waterborne sources of toxics in the food industry are the washing operations (and perhaps certain other wastewaters such as blanching water and flume water). Certain commodities are stored after harvesting to allow actual processing to proceed over a period of several months or until the next harvest. Pesticides are required for the storage of certain commodities. An example of this problem was reported for sweet potato processing and is discussed in Appendix F.

WATER REUSE AND RECYCLING

Cascading water use or countercurrent water use systems (where an operation requiring relatively low quality water uses wastewater from another operation) or recycling systems (where water is treated and returned to the same operation) can greatly reduce the intake water requirements for a food processing plant. To date the issue of water reuse or recycling in food processing has often been handled on a case-by-case basis. The U.S. Food and Drug Administration (FDA) and the U.S. Department of Agriculture (USDA) have responsibility for setting manufacturing standards for specific food processing operations. The FDA specifies that "any water that contacts foods or food-contact surfaces shall be safe and of adequate sanitary quality." This apparently flexible standard applies to non-meat and non-poultry processing operations and will allow the implementation of water reuse or recycle systems. In such cases the last washing of the product is usually done with potable water. USDA is responsible for meat and poultry processing operations and specifies that "potable water" be supplied to the plants by these processors, and water reuse is considered on a case by case basis.

TABLE 23. SUMMARY OF SIGNIFICANT WASTEWATER PROBLEMS

Industry	Assessment	Wastewater Volume	BOD_5 Load	Suspended Solids Load
Meat packing	H	X-1	X-1	X-1
Seafood	H	X-2	X-2	X-2
Canned and preserved fruits and vegetables	H	X-1	X-1	X-1
Malted beverages	H	X-1	X-1	X-1
Roasted coffee	L	X-3	X-3	X-3
Sugar (cane) (beet)	H	X-1	X-1	X-1
Grain milling (flour)	L	X-3	X-3	X-3
(rice)	L	X-3	X-3	X-3
(corn)	M	X-3	X-1	X-1
Flavoring extracts and syrups	M	N.A.	X-2	X-3
Dairy products	H	X-1	X-1	X-1
Distilled liquor	M	X-2	X-2	X-2

N.A. = not available.
H = high priority, M = moderate priority, L = low priority.
X-1 = major; X-2 = significant; X-3 = minor.
Source: SRI International.

Research and development work on wastewater reuse for a cannery and a poultry processing plant has been done by both Snokist Growers and the Maryland State Department of Health, and is discussed in more detail in Appendices G and H, respectivelv.

CANNED, FROZEN, AND PRESERVED FRUITS AND VEGETABLES INDUSTRY (CPFV)

The CPFV industry is an excellent example of a complex industry that is a major source of water pollutants. The industry basically extends the shelf life of raw commodities through the use of various preservation methods such as canning, freezing, dehydrating, and brining. It is difficult to give a general description of the wastewater problems of the CPFV industry because there is a great diversity in geographical location, size of plant, and number of products processed (See Appendices 8, 9, 10 on CPFV.) Whereas other industries such as the organic chemicals industry may have a wider range of products and a comparable number of plants, the CPFV industry is unique in the seasonal variation of the waste loads and the need to meet high sanitation standards in compliance with state and federal laws.

The wastewater pollutants generated by the CPFV industry result predominantly from the unit operations of transport, peeling, washing, and blanching. Table 24 shows the sources and estimated average volumes of wastewaters from processing steps in the canning of fruits. The volumes

TABLE 24. SOURCES AND ESTIMATED VOLUMES OF WASTEWATERS FROM PROCESSING STEPS IN CANNING OF FRUITS
(Highly variable by commodity)

Operation	Waste Flow (liters) per hour	Waste Flow (liters) per ton	Percent of total flow
Peeling	4,542	48	2
Spray washing	41,635	385	17
Sorting, slicing, etc.	11,355	120	5
Exhausting of cans	4,542	48	2
Processing	2,271	24	1
Cooling of cans	90,840	945	37
Plant cleanup	79,485	840	33
Box washing	7,149	70	3
Total	241,819	2,480	100

Source: Reference 4-5.

given are those that result if only fresh water is used in all operations and no attempt is made to reuse water. The volumes may be greatly reduced by recycling; for example, can cooling is now accomplished at some plants using recirculated cooling water systems.

Table 25 shows a 1975 SRI classification of the major commodities in terms of total raw wastewater flow, raw BOD_5, and suspended solids loads, based on EPA data. (This table was developed to aid in evaluating past EPA research and development funding priorities.)

TABLE 25. RANKING OF MAJOR COMMODITIES BY SIGNIFICANCE OF RAW WASTE LOAD

Classification	Commodity
Highest Priority 12-15	Citrus, frozen and dehydrated potatoes, tomatoes, corn, pineapple, peaches, peas
High Priority 9-11	Green beans, pickles, pears, prunes
Medium Priority 6-8	Apples, spinach, beets, carrots, broccoli, apricots, canned dry beans, cauliflower, sweet potatoes, canned white potatoes
Low Priority 4-5	Grapes, cherries, mushrooms, asparagus, lima beans, olives
Lowest Priority 3	Sauerkraut, blueberries and caneberries, pimentos, plums, onions.

Source: Reference 4-6.

In a study supported by the National Commission on Water Quality (NCWQ), Environmental Associates ranked the various commodities using the parameters and weighting factors shown in Table 26; these were selected on the basis of environmental and economic impacts. (The parameters in Table 26 were selected from a list of parameters that included "significance of toxic pollutants discharged.")

TABLE 26. IMPORTANCE PARAMETERS AND WEIGHTING FACTORS FOR RANKING COMMODITIES

Importance parameter	Weighting factor*
Total organic load	0-4
Number of point sources	0-4
Total hydraulic load	0-3
Number of surface water dischargers	0-2
Number of single activity plants	0-2
Intermedia problems	0-1
Climatic factors	0-1
Season length	0-1
Style variations	0-1
Activity sophistication	0-1

*Higher values indicate greatest environmental or economic impact.

Source: Reference 4-7.

Table 27 clearly shows that one may expect wide variations on unit wastewater quantities and strength from plant to plant.

The CPFV industry was subdivided into the following three groups in the NCWQ study, using the weighting process previously described:

Group A - Those activites not considered worthy of further study because of insignificant pollutional impacts

Group B - Those activites that could be adequately assessed by refining and updating data currently available from EPA

Group C - Those activities involving either: (1) major pollutant discharges, or (2) outstanding examples illustrating important economic, technological, and/or environmental issues, and therefore, warranting analysis in greater detail than can be achieved with the existing EPA data.

Table 28 is a summary of the results of this categorization task. (SRI's ranking for those commodities considered in the SRI project are

TABLE 27. COMPARISON OF EPA AND NCWQ CONTRACTOR'S RAW WASTE VALUES

	EPA Data			NCWQ Data		
Commodity	Flow ratio (gal/ton)	BOD_5 ratio (lb/ton)	TSS* ratio (lb/ton)	Flow ratio (lb/ton)	BOD_5 ratio (lb/ton)	TSS* ratio (lb/ton)
Apple juice	690	4.1	0.6	660	4.02	0.555
Apple products	1290	12.8	1.6	1660	20.0	1.49
Brined cherries	3690	68.1	3.28	4790	42.1	4.19
Citrus products	2425	6.4	2.6	385	3.56	0.827
Carrots	2940	28.9	15.6	2770	29.0	17.6
Grapes pressing	410	4.03	0.749	304	2.91	0.724
Frozen potatoes	2710	45.8	38.8	2430	37.8	29.8
Onions	4830	57.3	17.1	10900	41.4	22.2
Squash	2890	29.5	13.1	2360	24.2	10.7
Blackberries and caneberries	1710	6.52	1.41	2760	10.8	2.72
Green beans	3280	5.91	4.44	3410	6.30	5.14
Cherries	3130	30.6	1.84	3200	26.5	1.7
Corn	1790	27.3	9.12	1610	25.5	8.38
Peaches	3000	29.5	8.27	2990	31.0	8.61
Plums	1010	9.52	0.893	984	8.79	0.666
Pears	3470	52.8	12.7	3200	52.3	10.8
Strawberries	3420	13.6	4.06	3870	15.7	4.93
Tomatoes	2210	9.3	12.3	2450	9.58	12.3
Dehydrated potatoes	2100	22.1	17.2	2040	21.5	15.4
Grape juice canning	1410	13.9	2.60	1570	10.0	2.84

*Total suspended solids.

Source: Reference 4-7.

Note: Convert gal/ton to liters/ton multiply by 3.785; convert lb/ton to kilograms/ton multiply by 0.4545.

TABLE 28. RESULTS OF IMPORTANCE MATRIX ANALYSIS*

Commodity	Group	Commodity	Group
Rhubarb	A	Apricots	B (M)
Artichokes	A	Carrots	B (M)
Okra	A	Frozen corn	B
Caneberries	A (L)+	Jam, jelly	B
Pimientos	A (L)	Prunes	B (H)
Grapes	A (L)	Olives	B (L)
Soup mixes	A	Tomatoes (peeled)	B
Brussels sprouts	A	Dry fruit	B
Fruit cocktail	A	Dehydrated potatoes	B (H)
Strawberries	A	Dressings, sauces	B
Asparagus	A (L)	Beets	B (M)
Broccoli	A (M)	Canned potatoes (white)	B (M)
Greens	A	Pears	B (H)
Sweet cherries	A (L)	Pineapples	B (H)
Cranberries	A	Apple products	C (M)
Cauliflower	A (M)	Canned soup	C
Mushrooms	A (L)	Dry beans	C (M)
Spinach	A (M)	Green beans	C (H)
Plums	A (L)	Sweet potatoes	C (M)
Blueberries	A (L)	Misc. canned specialties	C
Baby food	B	Canned corn	C (H)
Dried vegetables	B	Tart cherries	C
Brined cherries	B	Peas	C (H)
Lima beans	B (L)	Peaches	C (H)
Squash	B	Pickles	C (H)
Onions	B (L)	Frozen potatoes	C (H)
Nationality foods	B	Tomato (concentrate)	C (H)
Sauerkraut	B (L)	Citrus products	C (H)
Apple juice	B (M)		

*The commodities are defined more completely in Appendices 1-18.

+SRI Rankings are based solely on raw wastewater loads and volume of flow:
(H) high priority, (M) moderate priority, (L) low priority.

Source: Reference 4-7.

also indicated.) Because many plants in the CPFV process more than one commodity and may produce numerous types of products from individual commodities, the NCWQ report subcategorized the industry as shown in Table 29.

From the data in Table 29, it is clear that the industry has no general rules for wastewater treatment. Single-commodity plants (many very large) such as corn processors, citrus processors, pickle producers, potato processors, and sauerkraut producers are more likely to have on-site treatment with subsequent discharge to a stream than are the other categories. Tomato processors and apple processors are two notable exceptions, with wastes from more than 70% of the tomato products production capacity going to municipal treatment systems and wastes from more than 90% of apple products production capacity going to municipal or on-land systems. One important difference between large corn and potato processing plants and tomato processing plants is the length of the processing period or "campaign." Citrus and potato processing operations may run for 9 months of the year while tomato processing operations run for only 2 to 3 months. (The shorter the season the less likely a company will be to invest large sums of money for pollution control equipment that will sit idle for 75% of the year.) Table 29 shows that more than two-thirds of the CPFV industry's wastewater is treated in municipal treatment systems or by on-land treatment

It was previously mentioned that water reuse and recycling can significantly reduce the volume of wastewater in the CPFV industry. However, extensive water reuse or recycling in any food industry does raise questions concerning public health. Public health issues may arise if water that has been used to transport wastes (equipment washing) or wash commodities is to be used in areas where product contact may occur. While cascading water reuse from a process demanding high water quality to a process demanding lower water quality may be acceptable, complete reuse by recycling to all areas of the plant may be limited because of pesticide buildup or the potential for pathogenic organism transport. The current research now under way on water reuse in the CPFV industry is described in Appendix G.

SEAFOOD PROCESSING INDUSTRY

The canned and preserved seafood industry is classified into the following categories: farm-raised cat fish, conventional blue crab, mechanized blue crab, Alaskan crab, dungeness and tanner crab, shrimp, tuna, salmon, sardine, oyster, clam, etc.

TABLE 29. PERCENTAGE OF PRODUCTION BY METHOD OF WASTEWATER MANAGEMENT FOR VARIOUS PLANT CATEGORIES

Plant Category	Body of water after treatment on-site	Municipal system	On-land irrigation;+ evaporation or percolation lagoons
Apples (43)*	6%	26%	68%
Dry beans (19)	8	29	63
Misc. berries (67)	11	70	19
Brined products (73)	1	26	73
Citrus (82)	69	7	24
Corn (51)	40	8	52
Dehydrated fruits and vegetables (35)	--	75	25
Peeled fruit (43)	7	93	
Pitted fruit (59)	15	7	77
Peeled, pitted or juiced fruit (23)	67	30	3
Fruit juice (43)	11	77	12
Fruit and blanched vegetables (55)	1	90	9
Pickles (78)	35	26	39
Frozen or dehydrated potatoes (55)	42	24	34
Sauerkraut (23)	60	40	
Tomatoes (219)	6	78	16
Blanched vegetables (329)	37	16	49
Miscellaneous (141)	10	50	40
Peeled vegetables and tomatoes (43)	3	69	28

*Estimated number of plants falling into this plant category; total = 1486.
+Some systems with runoff.

Source: Reference 4-8.

Until recently, little information was available on water use and wastewater characteristics. Examples of unit wastewater loads for some subcategories of seafood processing are shown in Table 30. Data in Table 30 indicate that a tremendous variability exists in the unit water volume and in the BOD_5 and suspended solids loads generated.

TABLE 30. UNIT WASTE LOADS FOR SUBCATEGORIES OF CANNED AND PRESERVED SEAFOOD INDUSTRY

Commodity	Water use (liter/ton)	BOD_5 (kg/ton)	Suspended solids (kg/ton)
Crab*	12,452	7.5	3.0
Shrimp+	74,565	83	85
Clam± (mechanically shucked)	17,714	17	5.5
Oyster± (steam process)	88,948	55	141
Tuna+	16,654	12	9.1
Salmon±	16,654	51	19
Sardine±	7,873	8.2	5

*Assume that half is from conventional blue crab; the other half is from mechanized blue crab, Alaskan crab, dungeness, and tanner crab.

+From EPA-Proposed Effluent Limitations Guidelines, 1972.

±Source: Reference 4-9.

Table 31 shows the 1968 estimated quantities of raw materials processed in the canned and preserved seafood industry. Combining information from Tables 30 and 31 gives the estimates of wastewater loads

from subcategories of seafood processing shown in Table 32. Clearly, shrimp and tuna are two commodities with major water pollution problems.

TABLE 31. ESTIMATED QUANTITIES OF RAW MATERIALS PROCESSED IN CANNED AND PRESERVED SEAFOOD INDUSTRY IN 1968

Commodity	Raw quantity processed (10^3 tons)
Crab	30
Shrimp	120
Clam	90
Oyster	20
Tuna	520
Salmon	120
Sardine	26

Source: Reference 4-10.

TABLE 32. ESTIMATED WASTEWATER LOADS FROM SEAFOOD PROCESSING INDUSTRY

Commodity	Wastewater volume (10^6 liters)	BOD_5 (10^6 kg)	Suspended solids (10^6 kg)
Crab	374	0.225	0.091
Shrimp	8,933	10	10.3
Clam	1,593	1.51	0.491
Oyster	1,779	1.11	2.82
Tuna	8,668	6.14	4.73
Salmon	2,017	0.609	2.24
Sardine	204	0.214	0.132

Source: SRI International.

Treatment of wastewaters from seafood processing has been almost nonexistent, because the processing plants are typically located on the seacoast, many in remote areas. Since the passage of PL92-500, increasing concern about the condition of the environment has stimulated activity in the application of existing waste treatment technologies to the seafood industry. The tuna processing industry has done considerable work on by-product recovery, and some other segments screen their wastes for recovery of solids for use in meal and feeds. Further research is needed on in-plant water use as well as end-of-pipe treatment.

SUGAR PROCESSING INDUSTRY

The sugar processing industry encompasses operations that convert raw sugar cane to raw sugar, raw sugar to refined sugar, and raw sugar beets to refined sugar. Table 33 shows the annual discharge of wastewater volume, BOD_5, and suspended solids from the sugar processing industry in 1974.

TABLE 33. ANNUAL WASTEWATER DISCHARGE OF SUGAR PROCESSING INDUSTRY, 1974

	Total sugar Processing Industry	Beet sugar	Cane sugar refining	Raw cane sugar
Wastewater volume (10^9 liters)	341	132	18.9	189
BOD_5 (10^6 kg)	68.2	4.55	2.28	61.4
Suspended solids (10^6 kg)	455	4.55	2.28	448

Source: Reference 4-4.

As shown, raw cane sugar represents the major source of water pollution in the sugar processing industry (with 56% of the wastewater volume 90% of the BOD_5 load, and 98.5% of the suspended solids). Beet sugar generates a significant portion of wastewater volume, but a less significant portion of BOD_5 and suspended solids loads. The water pollution problem from cane sugar refining is small in the sugar processing industry. The water pollution problems from raw cane sugar and beet sugar are discussed below.

The wastewater generated from raw cane sugar industries comes from such operations as cane washing, floor washing, and condensing. Table 34 shows the sources, estimated volume, and BOD_5 load of wastewaters from processing steps in the cane sugar industry. The wastewater generated by beet sugar industries comes from flume water, pulp screen water, pulp press water, condenser, pulp silo drainage, and Steffen waste. In pulp silo the extracted pulp ferments and produces a desirable type of wet livestock feed. In the Steffen process, finely ground calcium oxide is added under low temperature conditions to a dilute molasses solution to precipitate a calcium saccharate. The Steffen wastes constitute one of the most serious disposal problems in the sugar beet industry. (See Table 35).

TABLE 34. REPRESENTATIVE CHARACTER AND VOLUME OF RAW CANE SUGAR MANUFACTURING WASTES
(2,400 tons of cane daily capacity)

Kind of Waste	Flow rate (gpm)	BOD_5 average (mg/liter)	Total daily BOD load (kg)
Cane wash water	1,000	680	3,708
Floor washings and boiler blowdown	100	378	206
Excess condensate	50	10	2.73
Condenser water*	5,000	69	1,881
Totals	6,150	–	5,797.73
Average, per ton of daily capacity	–	–	5.31

*Assumes once-through operation.

Source: Reference 4-11.

The wastewater from the Steffen process is extremely high in BOD. Several plants had to partly discontinue the Steffen operations because of the waste disposal problem.

About 65% of the sugar processing industry uses lagoon treatment for wastewater. About 30% of the industry uses the land disposal system, and only 5% of the industry discharges to municipal sewage treatment plants.

Lagoon systems are effective in removing all the floating and suspended solids. Although BOD reduction on a percentage basis is good, the final effluent BOD is often too high to allow compliance with stream standards. Effluent of low BOD can be attained only by maintaining long retention periods, which requires large land areas. There is much interest in developing systems that require less land area.

TABLE 35. REPRESENTATIVE CHARACTER AND VOLUME OF BEET SUGAR MANUFACTURING WASTES

Waste	Flow (liter/ton of beets)	BOD_5 (mg/liter)	Suspended solids (mg/liter)	BOD_5 (kg/ton of beets (sliced)
Flume water	9,841	210	800-4,300	2.1
Pulp screen water				
Side-dump celltype diffuser	5,375	500	620	2.7
Continuous diffuser*	1,514	910	1,020	1.4
Pulp press water	681	1,710	420	1.2
Pulp silo drainage	795	7,000	270	5.6
Lime cake slurry	341	8,600	120,000	3.0
Lime cake lagoon effluent	284	1,420	450	0.40
Barometric condenser water	7,570	40	–	0.30
Steffen waste	9,992+	10,500	100-700	105

*Water - transported pulp in lieu of mechanical conveyor.

+Per ton of molasses processed on a 50% sucrose basis.

Source: Reference 4-11.

The sugar industry has been able to reduce effectively the wastewater volume and BOD load by improvements and advancements in the following areas:

(1) In-plant practices and equipment design

(2) Reuse of press water

(3) Enhanced recovery of sugar

(4) Reuse of flume water.

Suspended solids loads in wastewaters from sugar industries are the highest among the food industries. More research is needed for improving harvesting equipment to reduce amounts of soil, leaves, and stems, since these materials require the use of excessive volumes of water to clean the product. Improvements are also needed in the equipment used for dry separation of the unwanted material from the sugar-bearing material.

MEAT INDUSTRIES (Red Meat and Poultry)

Red meats and poultry processing both require facilities for receiving; killing; removal of hide, hair, or feathers; eviscerating and trimming; cooling; and packing. Further processing of the meat is more extensive with swine and beef than with poultry.

The quantity and characteristics of the wastewater from this industry are influenced by plant size, species slaughtered, amount of on-site processing, extent of wastewater segregation, and recycling and reuse. The reported ranges in water use, BOD, and suspended solids for wastewaters from red meat packing and processing are quite large, as shown below.[4-14]

Flow, liter/head	575-685
BOD, mg/liter	320-5440
BOD, kg/1000 kg live weight	1.9-27.6
Suspended solids, mg/liter	240-7220
Suspended solids, kg/1000 kg live weight	1.2-53.8
Total volatile solids, kg/1000 kg live weight	3.1-56.4

Typical values for wastewater loads in kilograms per 1000 kilograms of live weight killed are given in Table 36. As shown, the wastewater loads from poultry dressing (kilograms per 1000 kilograms of live weight killed) are similar to those of red meat packing and processing.

Table 37 shows the estimated water pollution potential from the meat packing industry in 1967. Of the total raw waste load, red meat packing and poultry dressing account for 80% and 15%, respectively. Of the total wastewater volume, red meat packing and poultry dressing account for 64% and 30%, respectively.

---

*Source: Reference 4-12.

TABLE 36. RED MEATS AND POULTRY PROCESSING WASTE LOADS

Waste Load Parameter	Poultry (kg/1000 kg LWK*)	Red meat (kg/1000 kg LWK*)
BOD_5	10.0	12.1
Suspended solids	7.8	8.7
Grease	1.7	6.0
Total Kjeldahl nitrogen	1.2	1.0
Phosphorus	0.4	0.2
Flow (liters)	3,785	1,806

*LWK - live weight killed.

Source: Reference 4-4.

TABLE 37. ESTIMATED WASTEWATER LOAD AND VOLUME FOR MEAT INDUSTRY IN 1967

				Raw wastewaters	
SIC No.	Industry	Material consumed (10^6 kg)		Load (10^6 BOD)	Flow (10^6 liters)
2011	Meat packing	22,591	LWK*	595	196,820
2013	Meat processing	1,682	meat	21	17,790
2015	Poultry dressing	5,091	LWK*	112	92,733
				728	307,343

*LWK = live weight killed.

Source: Reference 4-4.

Meat industry wastewaters contain carbon, nitrogen, and phosphorus in proportions such that aerobic or anaerobic biological treatment is readily accomplished without the addition of nutrients. The treatment of wastewater may be handled in a municipal sewage treatment plant. In many communities, the only pretreatments required prior to discharge of wastewater to the public sewer are treatment by screening to remove manure solids and gravity separation or air flotation to reduce grease to 400 mg/liter. Between 50% and 70% of the total discharges from the meat processing industry are to municipal sewer systems.

During the 1950s and early 1960s, the meat industry abandoned many old packing plants in larger cities and built new slaughter or packing plants in small communities near the source of animal production. Increased mechanization in processing meat products has tended to reduce wastewater flow per unit of production. Location of new plants in small communities has in many cases required the installation of secondary treatment facilities on site, such as trickling filters, activated sludge, anaerobic digestors, and anaerobic contact processes.

REFERENCES

4-1 Office of Water Planning and Standards, National Water Quality Inventory, EPA-440/9-74-001, Volume 1, Washington, D.C., 1974.

4-2 U.S. Department of the Interior, The Cost of Clean Water, Volume II, FWPCA, U.S. Government Printing Office, Washington, D.C., 1968.

4-3 U.S. Department of the Interior, The Cost of Clean Water, Volume III, FWPCA, U.S. Government Printing Office, Washington, D.C., 1968.

4-4 EPA Unpublished Research Planning Documents, 1974.

4-5 Mercer, W. A., "Canned Foods," in Industrial Wastewater Control, Gurnham, C. F., ed., (Academic Press, New York, 1965).

4-6 Jones, J. L., and T. R. Parks, "Evaluation of Current and Proposed Industrial Water Pollution Control Research Development and Demonstration (RD&D) Program Under the Canned and Preserved Fruits and Vegetables (CPFV) Categories," SRI International Report, EPA Grant No. R-803239-01-0, 1975.

4-7 Environmental Associates, Inc., "Capabilities and Costs of Water Pollution Abatement Technology for Canned Fruits and Vegetables," PB-244-801, NTIS, June 1975.

4-8 Environmental Associates, Inc., "Capabilities and Cost of Technology (Study area III), Canned and Preserved Fruits and Vegetables Industry," February 1975.

4-9 "Development Document for Effluent Limitations Guidelines and Source Performance Standards for the Fish Meal, Salmon, Bottom Fish, Clam, Oyster, Sardine, Scallop, Herring, and Abalone Segment of the Canned and Preserved Fish and Seafood Processing Industry Point Source Category," EPA PB256-240, September 1975.

4-10 Solid Waste Management in the Food Processing Industry, PB-219 019 NTIS, 1973.

4-11 Jensen, L. T., "Sugar", in Industrial Wastewater Control, Gurnham, C.F., ed. (Academic Press, New York, 1965).

4-12 Johnson, A. S., "Meat," in Industrial Wastewater Control, Gurnham, C. F., ed. (Academic Press, New York, 1965).

SECTION 6

PESTICIDES

Pesticides are widely used in agriculture and may be present in wastewater streams, gas streams, or solid wastes (food scraps or sludges) from food processing plants. To predict the fate of pesticides in the various media, a mechanistic understanding of solubilization; volatilization; adsorption; and chemical, thermal, or biological degradation of pesticides is needed. A predictive model such as this is far beyond the scope of this study. For this study it will only be possible to estimate the maximum potential concentrations of pesticides in the wastewaters, gases, and solid wastes from several selected commodity categories.

There are a wide variety of pesticides for agricultural use. According to their purpose, pesticides can be categorized into insecticides, herbicides, and fungicides. For this study of the maximum potential concentrations of pesticides, only insecticides have been considered.

Two commodities, citrus and apple, are considered in this analysis, and concentrations of pesticides in wastewater and solids are estimated. (See Appendix D for a discussion of pesticide releases to the atmosphere from thermal processing.) Three typical chlorinated hydrocarbons (chlordane, lindane, and toxaphene) and three organophosphorous compounds (EPN, malathion, and parathion) have been selected for estimating the maximum potential releases. Table 38 shows the maximum allowable concentrations of these pesticides in raw citrus and apple.[5-1] These maximum allowable concentrations will be used to estimate the maximum concentrations in wastewater and solid wastes.

Table 39 presents the wastewater and solid waste quantities from citrus and apple processing industries. The information in Tables 38 and 39 can be used to estimate the maximum potential concentration of pesticides. To estimate the maximum concentration of pesticides in wastewater, it is assumed that all the pesticides in the raw crop are transferred to the wastewater. The following is an example of an estimate of the concentration of chlordane in wastewater from the citrus industry:

From Table 38: Maximum allowable concentration of chlordane in raw citrus = 0.3 ppm

From Table 39: $\frac{\text{liters of wastewater}}{\text{ton of raw citrus processed}} = \frac{9084 \text{ liters wastewater}}{\text{ton of citrus}}$

TABLE 38. MAXIMUM ALLOWABLE CONCENTRATION OF SELECTED INSECTICIDES IN RAW CITRUS AND APPLE

Insecticide	Concentration (ppm) Citrus	Apple
Chlorinated hydrocarbons		
Chlordane	0.3	0.3
Lindane	--	1
Toxaphene	7	7
Organophosphorous		
EPN	3	3
Malathion	8	8
Parathion	1	1

Source: Reference 5-1.

TABLE 39. QUANTITY OF WASTEWATER AND SOLID WASTES FROM SELECTED FOOD INDUSTRIES

Food industry	Wastewater (liters wastewater/ ton of raw crop)	Solid wastes (ton of residues/ ton of raw crop)
Citrus	9,084 *	0.395†
Apple	2,650 *	0.276‡

*From Reference 5-2.

†From Reference 5-3, 3,080 tons of residuals is generated from 7,800 tons of raw citrus processed. Therefore,

$$\frac{3{,}080 \text{ tons of residuals}}{7{,}800 \text{ tons of raw citrus}} = 0.395 \text{ ton of residuals/ton of citrus.}$$

‡From Reference 5-3, 290 tons of residuals is generated from 1,050 tons of raw apple processed. Therefore,

$$\frac{290 \text{ tons of residuals}}{1{,}050 \text{ tons of raw apple}} = 0.276 \text{ ton of residuals/ton of apple.}$$

Therefore,

the maximum potential concentration of chlordane in wastewater from citrus industry

$$= \left(\frac{0.3\ \mu g\ \text{chlordane}}{g\ \text{of citrus}}\right)\left(\frac{2000\ lb}{ton}\right)\left(\frac{454\ g}{1\ lb}\right)\left(\frac{\text{ton of citrus}}{2400\ \text{gal wastewater}}\right) \times$$

$$\left(\frac{1\ \text{gal}}{3.785\ \text{liters}}\right) = 30\ \mu g\ \text{chlordane/liter of waster, or}$$

30 ppb.

To estimate the maximum concentration of pesticides in solid wastes, it is assumed that all the pesticides in the raw crop are present in the solid wastes (i.e., food scrap). The following is an example of an estimate of the concentration of chlordane in solid wastes from the citrus industry:

From Table 33:

Maximum allowable concentration of chlordane in raw citrus = 0.3 ppm.

From Table 34:

$$\frac{\text{ton of residuals}}{\text{ton of raw crop}} = \frac{0.395\ \text{ton of residuals}}{\text{ton of raw crop}}$$

Therefore,

the maximum potential concentration of chlordane in solid wastes from citrus industry

$$= \frac{0.3\ \mu g\ \text{chlordane}}{g\ \text{of citrus}} \times \frac{\text{ton of citrus}}{0.395\ \text{ton of citrus residuals}}$$

=0.76 ppm.

Table 40 presents the maximum potential concentration for selected insecticides in wastewaters from citrus and apple industries. The maximum potential concentrations are much higher than EPA-proposed water quality criteria for pesticides. However, the predictions in Table 40 did not take into account the degradation of pesticides. Generally, organophosphorous compounds are more degradable than chlorinated hydrocarbons.

TABLE 40. MAXIMUM POTENTIAL CONCENTRATION FOR SELECTED INSECTICIDES IN WASTEWATERS FROM FOOD INDUSTRIES*
(ppb)

Insecticides	Food Industries Citrus	Food Industries Apple	EPA† Proposed Criteria
Chlorinated Hydrocarbons			
Chlordane	30	103	0.04
Lindane	--	343	0.02
Toxaphene	700	2,399	0.01
Organophosphorous			
EPN	300	1,028	0.06
Malathion	800	2,742	0.008
Parathion	100	343	0.001

*Assuming that all the pesticides on the crops enter the wastewater.

†From Reference 5-4.

Source: SRI International; EPA.

Table 41 gives the half-lives of three organophosphorous insecticides. As shown, the half-lives of EPN, malathion, and parathion are all less than 3 days. It is believed that the concentrations of organophosphorous insecticides will be below the EPA criteria if the time between pesticide application and harvesting is long enough for degradation. Caution should be used on chlorinated hydrocarbons since they are highly persistent (long-lived) and mobile.

TABLE 41. HALF-LIVES FOR SELECTED ORGANOPHOSPHOROUS INSECTICIDES

Insecticide	Half-life (days)
EPN	3 (Apples)
Malathion	3 (Apples)
	3 (Citrus)
Parathion	2 (Apples)

Source: Based on U.S. government data.

Table 42 presents the maximum potential concentration for selected insecticides in solid wastes from citrus and apple industries. If the solid wastes are used for animal feed, the pesticides will enter into the food chain:

solid wastes (containing pesticides) → cattle → human

TABLE 42. MAXIMUM POTENTIAL CONCENTRATION FOR SELECTED INSECTICIDES IN SOLID WASTES FROM FOOD INDUSTRIES*

Insecticides	Concentration (ppm) Citrus	Apple
Chlorinated Hydrocarbons		
Chlordane	0.76	1.1
Lindane	--	3.6
Toxaphene	18	25
Organophosphorous		
EPN	7.6	11
Malathion	20	29
Parathion	2.5	3.6

*Assume that all the pesticides on the crops remain in the solid wastes (i.e., food scraps).

Source: Based on U.S. government data.

Judging by the maximum concentrations of insecticides in solid wastes shown in Table 42, caution should be exercised in using solid wastes for animal feed, especially for those containing chlorinated hydrocarbons. It should be emphasized that Tables 40 and 42 may overestimate the maximum concentrations of pesticides in wastewaters and solid wastes because of the assumptions made in the estimation.

L. L. Wilson, et al., noted in feeding experiments with apple wastes that the fat of waste-fed cattle contained significantly more total DDT residue than did fat of cattle not fed waste. However, they concluded that low-to-moderate levels of apple waste may be used in cattle finishing rations.[5-5]

REFERENCES

5-1 Code of Federal Regulations, Title 40, Protection of Environment, part 180, U.S. Government Printing Office, Washington, D.C. 1976.

5-2 EPA, "Proposed Industrial Point Source Technology Achievement Plan to Meet the Requirement of PL 92-500." Unpublished EPA Planning Document, 1974.

5-3 Katsuyama, A. M., N. A. Olson, R. L. Quirk, and W. A. Mercer, "Solid Waste Management in the Food Processing Industry," PB-219019, NTIS, 1973.

5-4 EPA, "Comparison of NTAC, NAS, and proposed EPA Numerical Criteria for Water Quality", 1974.

5-5 Wilson, L. L., et al., "Accumulation of Certain Pesticides in Adipose Tissues and Performance of Angus, Hereford, and Holstein Steers Fed Apple Processing Wastes," Pennsylvania State University, Agricultural Experiment Station Publication No. 3668, 1970.

Appendix A

SULFUR OXIDES (SO_x) EMISSIONS

BACKGROUND

Fruit drying is an important source of SO_x emissions in the food industry. About 90% of the dried fruit output is produced in California. Some dried apples are also produced in the states of Washington and Oregon, and some fruit drying is practiced in Arizona, Idaho, New York, and Virginia.

Fruits can be artificially dried by several methods, such as kiln, cabinet, tunnel and continuous belt, or conveyor drying. For certain specialty products (such as snacks, military rations, dry mixes), vacuum drying and freeze drying are also used. Sulfur dioxide is emitted during the sulfuring operation, which may precede or occur simultaneously with the drying and/or dehydrating.

APPLE DRYING

Apples are dried either immediately after harvesting or after being stored in cold and/or controlled atmosphere until a convenient processing time. Only artificial driers are used by the commercial apple drying industry. Kiln or tunnel dryers are commonly used to produce dried apples. Dehydrated (low moisture) apples are processed in forced air dryers such as the continuous belt dryer, using kiln-dried fruit as raw material. Some apples are vacuum-dried for snack or other specialty product applications.

The process involves sizing, peeling, coring, and slicing the fruit to pieces 0.95-1.27 centimeters in thickness. The fruit is dipped into sodium bisulfite solution and then dried in a kiln or tunnel dryer to approximately 16 to 26% moisture. During drying, the fruit slices are exposed to the fumes of burning sulfur. Drying in the kiln requires 14 to 18 hours.

If the product is processed to a low-moisture state (under 5% moisture), the dried slices are cut to the desired size (0.64 centimeters and 0.95 centimeters dice, etc.) Frequently the fruit pieces are "instantized" by compression and/or perforation and dried to the final moisture content

in a continuous belt air dryer or in a vacuum dryer. An estimated 50% of the sulfur dioxide applied in the kiln drying process is lost during the secondary drying due to volatilization.

APRICOT AND FREESTONE PEACH DRYING

Apricots and freestone peaches are usually sun dried. Apricots for drying are hand-picked at maturity, placed into lug boxes, and transported to a cutting shed. The fruit is halved, the pit is removed, and the fruit is placed cup up on a flat, precleaned wooden tray. The filled trays are exposed to sulfur dioxide fumes (burning elemental sulfur) for about 12 hours. This prevents browning of the fruit during the drying process. After sulfuring, the trays are transferred to a field where they are placed on the ground, exposing the fruit to full sun. Apricots are allowed to dry in this manner for 1 day, after which time the individual trays are transferred to a shady area and stacked 0.9-1.22 meters high and allowed to dry in the "stack" for approximately 1 additional week.

Similarly, the freestone peaches, after sulfuring, are placed in full sun for 2 to 3 days or longer, depending on the weather conditions, at which time they are transferred to shady "stack" storage, dried for several additional weeks, removed from the trays, transferred to boxes or bins, and delivered to the packing plant.

Dehydrated (low moisture) apricots and peaches are processed from sun-dried (evaporated) fruit to a limited extent.

PEAR DRYING

Pears that are to be dried are hand-picked when ripe and transported to cutting sheds where they are cored and halved by hand. They are then placed cup up on wooden racks and stored overnight in sulfur houses, where they are exposed to burning sulfur to prevent browning. The pear halves are removed from the sulfur house and dried in the sun for 4 to 8 days and then transferred to stacked storage for an additional 2 to 3 weeks.

Once dried, the fruit is delivered to the packing plant, where it is processed usually to fill orders. The dried fruit from the field may sometimes be stored as long as several years before being repacked. Typically, the fruit is graded for size and appearance, hand-inspected to remove undesirable pieces (e.g., those with off color, slabs, insect damage) and then sent through a recleaning operation. This is normally a high-speed, reel-type cleaner fitted with brushes, which both softens and loosens any dirt, wood, or insect particles that may have become

attached to the fruit during the field drying process. Partial rehydration occurs, and hence the fruit must be resulfured and redried prior to adding preservatives (yeast and mold inhibitors) and final packing.

QUANTIFICATION OF THE SO_x PROBLEM

In 1972 the reported production of dried and dehydrated fruits was 661 billion kilograms. Sulfured products were included in the "apples" category and "other fruits" category, representing 11.9 and 24.2 million kilograms, respectively. Table A-1 presents estimates for hourly SO_2 emissions from sulfuring of apricots and apples respectively. The bases for the estimation of the emission factors used in Table A-1 are presented in Figures A-1 and A-2.

In Table A-2 the calculated emissions from sulfuring of apples and apricots are compared to four major industrial SO_2 sources.

Because of the small number of fruit sulfuring plants and the seasonal nature of the emissions, sulfuring of fruit is not a significant source of SO_2 relative to other point sources. These sulfuring plants may, however, create very localized air quality problems because of the ground level release of SO_2.

TABLE A-1. ESTIMATED HOURLY EMISSIONS OF SO_2 FROM SULFURING OF APPLES AND APRICOTS

Calculated emission factors

Apples	11 kg SO_2/ton of apple processed 60 kg SO_2/ton of dried apple product
Apricots	7 kg SO_2/ton of apricot processed 52 kg SO_2/ton of dried apricot

Apples

17,000 tons dried product/yr (maximum)
13,000 tons dried product produced in 1972
~ 10 plants

4 months of operation (75% of production)

$$\left(\frac{17{,}000 \text{ tons } (0.75)}{4 \text{ months}}\right)\left(\frac{1 \text{ month}}{4.2 \text{ weeks}}\right)\left(\frac{1 \text{ week}}{6 \text{ days}}\right)\left(\frac{1 \text{ day}}{16 \text{ hrs}}\right) = 7.9 \text{ tons dried apples/hr}$$

$$\left(\frac{7.9 \text{ tons dried apples}}{\text{hr}}\right)\left(\frac{60 \text{ kg } SO_2}{\text{ton dried apples}}\right)\Big/ 10 \text{ plants} = \frac{47.4 \text{ kg } SO_2/\text{hr}}{\text{plant}}$$

Apricots

6000 tons dried product/yr
~ 10 plants

2 weeks of operation, 6 days/week, 2 shifts/day

$$\left(\frac{6000 \text{ tons}}{2 \text{ weeks}}\right)\left(\frac{1 \text{ week}}{6 \text{ days}}\right)\left(\frac{1 \text{ day}}{16 \text{ hrs}}\right) = 31.25 \text{ tons/hr}$$

$$\frac{(31.25 \text{ tons dried product/hr})(52.3 \text{ kg } SO_2/\text{ton dried product})}{10 \text{ plants}} = \frac{163 \text{ kg } SO_2/\text{hr}}{\text{plant}}$$

Source: SRI International.

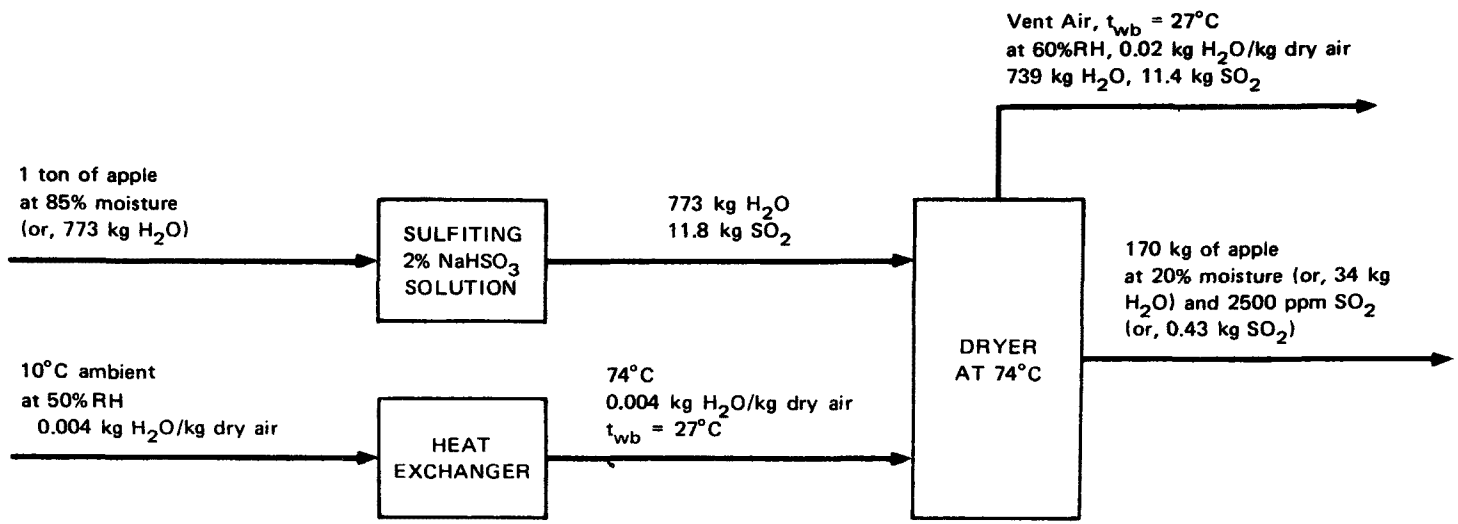

Solid Balance

909 kg x 0.15 = X kg x 0.80

X = 170 kg

where X is the weight of product

SO_2 Balance

SO_2 into dryer	909 x 0.85 x 0.02 x 0.77	= 11.8 kg
$-SO_2$ in product	170 x 2500 x 10^{-6}	= 0.43 kg
SO_2 vent		11.4 kg

H_2O Balance

H_2O into dryer	909 x 0.85	= 773 kg
$-H_2O$ in product	170 x 0.2	= 34 kg
H_2O evaporated		739 kg

SOURCE: SRI International.

Figure A-1. Flow sheet and material balance for apple sulfiting and drying.

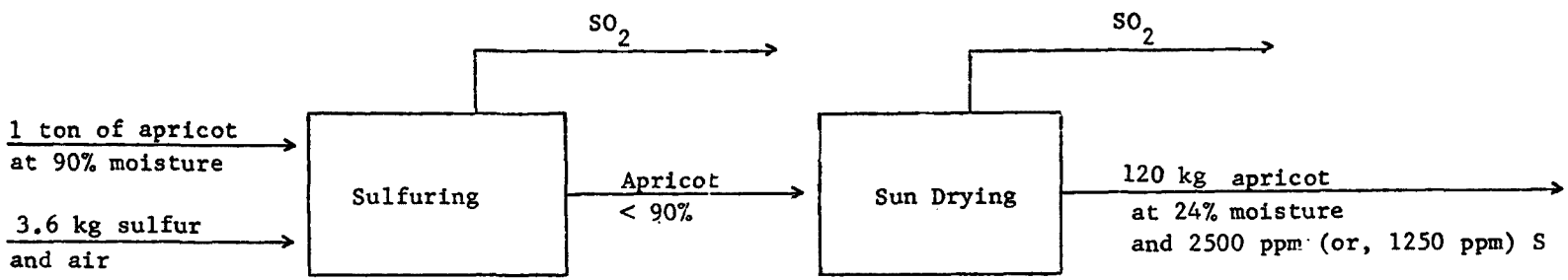

Solid Balance

909 kg x 0.10 = X kg x 0.76

X = 120 kg

where X is the weight of product

Sulfur Balance

Case I: 2500 ppm S in product

SO_2 input	8 x 2	= 7.3 kg
- SO_2 in product	263 x 2500 x 10^{-6} x 2	= 0.59 kg
SO_2 vent		6.71 kg

Case II: 1250 ppm S in product

SO_2 input	8 x 2	= 7.3 kg
- SO_2 in product	263 x 1250 x 10^{-6} x 2	= 0.32 kg
SO_2 vent		6.98 kg

SOURCE: SRI International.

Figure A-2. Flow sheet and material balance for apricot sulfuring and drying.

TABLE A-2. COMPARISON OF SO_2 SOURCES

Type of plant	Plant capacity	kg SO_2/hr
Power plant*	500 MW	1718
Oil refinery†	100,000 bbl/day	511 ~ 1174
Sulfuric acid plant‡	500 ton/day	38
Copper smelter§	300 ton/day	2614
Sulfuring of apple	1275 ton/4 months	580
Sulfuring of apricot	600 ton/2 weeks	180

*Meeting New Source Performance Standards of 0.55 kg $SO_2/10^6$ Btu for a power plant capacity factor of 0.7.

†Range of reported values; low value for S.F. Bay Area; high value from EPA emission factors.

‡Meeting NSPS of 1.8 kg $SO_2/10^6$ Btu H_2SO_2

§Assuming 2.30 ton SO_2/ton copper, and 90% removal of SO_2.

Sources: EPA; SRI International.

Appendix B

POLYNUCLEAR AROMATIC HYDROCARBONS (PAH)

BACKGROUND INFORMATION ON PAH

Polynuclear aromatic hydrocarbons are widely distributed in the environment.[B-1] They are found in living animal and plant tissue, sediments, soils, air, and surface waters. Most PAH probably arise as pyrolysis products formed during combustion or heating of fossil fuels and of most natural products. The compounds may be natural products of animal and vegetable metabolisms, and are probably released from exposed fossil fuel deposits by erosion. PAH are essentially not soluble in water and have low vapor pressures, so that the major environmental transport mode is as particulate in air or water. However, comparison of PAH levels in plant and animal tissue suggests that concentration effects are not large despite large partition coefficients reflecting high solubility in fatty tissues. Present methods of analysis for estimating airborne concentrations of PAH may seriously underestimate the concentrations of some relatively volatile PAH such as pyrene, anthracene, and benzo(a)anthracene.

In water and soil, PAH occur almost completely in the adsorbed state on minerals or organic particulate. In the air, some PAH may be found in the vapor phase although most must be adsorbed on particulate matter.

Only a few studies have been conducted to assess the biological effects of PAH, other than those that relate to carcinogenicity, mutagenicity, or teratogenicity. These studies indicate that these compounds can be acutely toxic to different organisms throughout the phylogenetic scale and can produce a variety of sublethal effects. These effects, however, do not appear related in terms of degree or type to the number of rings, number of ring substituents, or their position, or the arrangement of the rings within the molecule.

Athough many PAH compounds have been tested for carcinogenicity, little information is available on the acute and subacute toxicity of these compounds. Most studies concerned with effects of PAH compounds on enzyme systems and other biochemical factors have attempted to elucidate the mechanism of carcinogenic action.

PAH are formed under high-temperature pyrolysis of organic matter. The amount of benzo(a)pyrene (BaP) formed, for example, depends on how reducing the combustion atmosphere is. With increasing air-to-fuel ratios, BaP decreases in concentration. PAH formation also seems to be associated with higher plants that contain more complex phenolic compounds (e.g., lignin), but other types of organics can also produce PAH.[B-6] Pyrolysis of lignins and terpines during forest fires has been identified as a likely source of PAH in relatively high yields.

Listed below are typical values for concentration of PAH on particulate matter from open burning that could be comparable to values for a smokehouse.

	Mg/kg of particulate matter		
PAH	Municipal	Commercial	Open
Benz(a)anthracene	0.09-0.26	5-210	25-560
Benzo(a)pyrene	0.02-3.3	58-180	11-1100

PROBABLE SOURCES OF PAH IN THE FOOD INDUSTRIES

Of the more than 1300 meat processors in the United States, the vast majority use smoking for flavoring. In 1970, 3 million tons of meat products and approximately 17,000 tons of fish were smoked.

Within the past few years, technology has made possible the manufacture of an artificial liquid smoke flavoring product containing chemical components simulating the color, aroma, and flavor characteristics of smoke. When used in meat or poultry products, their names are modified with the term "Artificial Smoke Flavor Added."

In addition to the synthesized liquid, a natural liquid smoke product is also produced. It is prepared by burning wood and trapping and condensing the smoke into a liquid. The liquid is then filtered to remove many of the undesirable components, such as tars and solid particles. Meat and poultry products containing such a substance are required to be labeled with the terms "Smoke Flavored" or "Smoke Flavoring Added."

According to Mr. L. G. Broidy of the Western Regional Office MID, perhaps as much as 50% of the smoke processed meat is prepared with natural liquid smoke, and this proportion is increasing rapidly.[B-2]

The application of liquid smoke has at least two advantages: (1) sanitation of the smoking facilities, due to the absence of many tars from the liquid smoke; (2) environmental considerations, since there is less evacuation of pollutants into the atmosphere from liquid smoke than with the natural wood burning process. This latter advantage has gained particular attention in municipalities having strict ordinances on air pollution.[B-3]

Although PAH have not been identified as emissions from smokehouses, literature mentions the relatively high PAH content of smoked fish and meats.[B-4] The source of these PAH in the meat is probably the smoke, because the temperature of the meat itself would not be high enough to form these compounds.

The smoking of meat gives the finished product a characteristic and desirable flavor, some protection against oxidation, and an inhibiting effect on bacterial growth. Smoke is most commonly generated from hardwood sawdust or small-size wood chips outside the oven and is carried to the oven and introduced through duct work. A small stream of water is used to quench the burned hardwood sawdust before dumping the sawdust to waste. The most common operation is to overflow the water from this quenching section and to waste the water into the sewer. One plant slurried the char from the smoke generator, piped it to a static screen for separation of the char from the water, and then wasted the water.

In total quantity, the waste load and wastewater generated in this cleanup is not particularly significant. However, there is a noticeable coloration of the wastewater during cleanup and, depending on the extent of the use of caustic, an increase in the pH of the wastewater.

QUANTIFICATION OF THE PAH PROBLEM IN THE FOOD INDUSTRIES

Smokehouse Exhaust Products

Smokehouse exhaust products include organic gases, liquids, and solids, all of which must be considered air contaminants. Many of the gaseous compounds are irritating to the eyes and reasonably odorous. A large portion of the particulates is in the submicrometer size range where light scattering is maximum. These air contaminants are attributable to smoke, that is, to smoke generated from hardwood, rather than from the cooked product itself.[B-5]

Exhaust gases from both atmospheric and recirculating smokehouses can be periodically expected to exceed 40% opacity, the maximum allowable under many local air pollution control regulations. With the possible exception of public nuisance, smokehouse exhaust gases are not likely to exceed other local air quality standards.[B-5]

Hooding and Ventilation Requirements

Atmospheric smokehouses are designed with exhaust volumes of about 2.74 cubic meters per square meter of floor area. Somewhat higher volumes are used with atmospheric houses of two or more stories.[B-5]

Recirculation smokehouses have a considerably wider range of exhaust rates. During smoking and cooking cycles, volumes of 0.914 to 3.66 cubic meter per square meter of floor area are exhausted.[B-5]

The highest reported values for particulate matter in smokehouse exhaust are about 0.535 grams per normal cubic meter, with the emission factors varying from 0.136 to 0.068 kg/ton of meat for the uncontrolled and controlled cases, respectively.[B-5,6]

If one assumes a PAH concentration of 1000 ppm on the particulate matter and 3×10^6 tons of meat smoked per year (assuming no controls), then the maximum PAH release to the atmosphere would be as follows:

$$\left(\frac{3.0 \times 10^6 \text{ tons meat}}{\text{yr}}\right)\left(\frac{0.136 \text{ kg particulate}}{\text{ton}}\right)\left(\frac{455 \text{ kg PAH}}{455 \times 10^3 \text{ kg particulate}}\right) =$$

$$\frac{0.455 \text{ kg PAH}}{\text{yr}}$$

Approximately 9.09 kilograms of wood is burned per ton of meat smoked.[B-6] By assuming a char production of 0.227 kg/kg wood and a concentration of PAH of 1000 ppm on the char, the possible quantity of PAH that is washed out of the smokehouses can be estimated:

$$\left(\frac{3.0 \times 10^6 \text{ tons meat}}{\text{yr}}\right)\left(\frac{9.09 \text{ kg wood}}{\text{ton meat}}\right)\left(\frac{0.227 \text{ kg char}}{\text{kg wood}}\right)\left(\frac{455 \text{ kg PAH}}{455 \times 10^3 \text{ kg char}}\right) =$$

$$\frac{13{,}600 \text{ kg PAH}}{\text{yr}}$$

As shown in Table B-1, the total estimated amount of PAH emissions (listed as POM for polycyclic organic matter) is 4.8 million tons. The estimated releases from smokehouses are insignificant compared to other sources.

TABLE B-1. HAZARDOUS POLLUTANT SOURCES

	Amount of POM*	
Source	Tons/year	%
Iron and steel		
Metallurgical coke	43,380	0.90
Asphalt industry		
Paving material preparation	2,800	0.06
Roofing material preparation	23,230	0.48
Petroleum refining	2,170	0.05
Incineration		
Industrial	2,228	0.05
Domestic	730	0.02
Auto body	14,602	0.30
Conical burner	212,211	4.42
Open burning	526,843	10.98
Agricultural burning	2,161,142	45.05
Natural fires, forest	1,433,712	29.89
Natural fires, urban	6,060	0.13
Municipal	682	0.01
Coal refuse	193,500	4.03
Power plant boilers		
Pulverized coal	8,980	0.19
Stoker coal	1,032	0.02
Cyclone coal	310	0.01
All oil	7,675	0.16
All gas	6,151	0.13
Industrial boilers		
Pulverized coal	1,896	0.04
Stoker coal	6,635	0.14
Cyclone coal	948	0.02
All oil	10,001	0.21
All gas	20,220	0.42
Residential/commercial		
Coal	66,796	1.39
Oil	33,105	0.69
Gas	10,065	0.21
Total	4,797,104	100.00

*POM is polycyclic organic matter.

Source: Reference B-7.

REFERENCES

B-1 Radding, S. B., et al., The Environmental Fate of Selected Polynuclear Aromatic Hydrocarbons, EPA 560/2-75-009, February 1976.

B-2 Personal communication, Mr. L. G. Broidy of the Western Regional Office MID, USDA (September 1976).

B-3 Federal Register, 41, 85 (April 30, 1976).

B-4 Development Document for Proposed Effluent Limitations Guidelines and New Source Performance Standards for the Processor Segment of the Meat Products Point Source Category, EPA 440/1-74/031 August 1974.

B-5 Air Pollution Engineering Manual, John A. Danielson, ed., U.S. Dept. of Health, Education and Welfare 1967.

B-6 Borneff, J., F. Solonka, H. Kunte, and A. Maximos, Experimental Studies on the Formation of Polycyclic Aromatic Hydrocarbons in Plants, Environmental Research 2: 22-29 (1968).

B-7 Goldberg, A. J., A. Survey of Emissions and Controls for Hazardous and Other Pollutants, EPA, PB223568, February 1973.

Appendix C

CHLORINATED HYDROCARBONS

BACKGROUND

Chlorinated hydrocarbons have been used for hops extraction, extraction of caffeine from coffee, extraction of cocoa butter, extraction of soya beans, and in the peeling of some fruits and vegetables. No data are available on the actual past usage of trichloroethylene (TCE), but it has been estimated that about 10% of the 1974 production of 157 million kilograms went to miscellaneous or nonmetal cleaning uses. The majority (two-thirds) of this miscellaneous use was probably in the production of polyvinl chloride where TCE is used as a chain terminator. Other non-food industry uses are as a solvent for textile cleaning and dyeing and as a raw material for fungicide production.[C-1] Available data show that the probable consumption of TCE by the food industries was well below 4.55 million kilograms in 1974. Coffee processing probably represented the largest single use.

COFFEE PROCESSING

Because of the "memorandum of alert" issued by the National Cancer Institute in April 1975 concerning potential carcinogenic hazards of TCE, all coffee extraction in the United States is now carried out with methylene chloride and this solvent will probably be substituted for almost all other chlorinated hydrocarbon uses in the food processing industries.

The estimated volume of discharge in 1975 of TCE from extraction of coffee from one plant was estimated at an average concentration of less than 150 mg/liter in an average raw wastewater flow of 100,000 gal/day (378.5 m^3/day), or about 55 kg/day.

A representative of Hills Bros. Coffee[C-3] reported that producers of decaffeinated coffee are now considering an aqueous extraction process. The reason is that many people consider the current substitute for TCE, methylene chloride, also to be highly suspect as a chemical carcinogen. In the new process, "saturated water" is prepared by extracting the green coffee beans. This saturated solution can be recycled and will remove

essentially only caffeine. The process is used in Germany and may be adopted here.

General Foods and Nestle are currently the two largest decaffeinated coffee producers. Most small coffee companies usually contract out the decaffeination production because of the high investment cost for the production units.

HOPS EXTRACTION

From contacts with representatives of Dow Chemical[C-4] and the Joseph Schlitz Brewing Co.,[C-5] it was learned that Pabst and Schlitz have definitely discontinued the use of hop extracts. It is also believed that all other brewers have discontinued this practice.[C-5] The impetus for this move was an FDA ruling requiring that labels give information that the beer contains hop extracts (and any other material used for the extraction that may remain).

OIL SEED EXTRACTION

Dow Chemical Company is now working on a process to use methylene chloride for oil seed processing. At present, the industry (without exception, according to Dow) uses hexane. The estimated loss of hexane is approximately 1 gallon per ton of seed processes, and there is apparently no real incentive to change the process solvent. Dow does not anticipate any rapid changes in the future by this industry in use of chlorinated solvents.

FRUITS AND VEGETABLES PEELING

Although a great deal of research and development work has been done on using chlorinated solvents for peeling, no processes have reached the commercial stages. The main problem with the process for commodities such as tomatoes has been migration of the solvent into the interior through the stem. According to representatives of the National Canners Association Laboratory in Berkeley, no plants are currently using chlorinated solvents for peeling, nor do they intend to do so.[C-6]

MISCELLANEOUS USES

Trichloroethylene was used as a solvent for extraction of annatto food coloring from botanical material. This food coloring is widely used

in the dairy industry. It is not known if methylene chloride is now used for this extraction.

Methylene chloride is a component of inks used for marking fruits and vegetables.

Neither of these uses should represent a significant source of chlorinated solvents relative to other industrial sources.

REFERENCES

C-1 SRI International Chemical Economics Handbook.

C-2 Camisa, A. G., "Analysis and Characteristics of Trichloroethylene Wastes," JWPCF 47 (5): 1021-31 (1975).

Appendix D

PESTICIDE EMISSIONS FROM ROASTING OPERATIONS

PEANUT ROASTING

Peanuts are roasted for making peanut butter and salted peanuts. In the roasting process, the moisture content of peanuts is reduced from a normal of about 5 to 0.5%.[D-1] The peanuts are heated to 160°C and held at this temperature for 40 to 60 minutes. Hot air is blown through the roaster to carry moisture away. At 160°C, pesticides in the peanuts may be vaporized and emitted with the hot air or thermally decomposed.

To assess the pesticide problem produced by peanut roasting, the types and quantities of pesticides applied to the peanuts in the field must be evaluated. Table D-1 lists the types of pesticides used and their tolerance level. The tolerance level is considered as the upper limit when the maximum quantity of pesticide is applied to the peanut field.

The maximum emission of pesticides from the roasting process can be estimated from the material balance for a roasting unit. Figure D-1 shows the process flow diagram and calculations. Sevin and parathion have been selected as representative of two common pesticides. In Table D-2, the calculated pesticide emissions from peanut roasting are compared with the occupational hazard level for ambient air in the work place.

In the roaster offgas, the calculated concentrations of parathion and sevin both exceed the levels permitted in air by the OSHA occupational standards. However, these concentrations will be much reduced by dilution with air as the offgas is discharged to the atmosphere. If the offgas should be incinerated to destroy odors and other volatiles, the pesticides should also be destroyed. The pesticides might also be partly removed by scrubbing the gas with either water or a chemical solution.

COFFEE ROASTING

Unlike peanuts, coffee is imported from South American and the concentration of pesticide in coffee may thus be low. According to Sevitz (1976), most coffee plants are equipped with afterburners for odor control. Pesticides are believed to be decomposed to water and carbon dioxide in afterburners.

TABLE D-1. TYPE AND TOLERANCE LEVEL OF PESTICIDES APPLIED TO PEANUTS

Type of pesticide	Pesticide ranking* (% application)	Tolerance† level (ppm)
Insecticide		
Sevin	15%	5
Methomyl	12	0.1
Toxaphene	7	7
Disyston	6	0.75
Azodrin	6	--
Thimet	6	0.05
Furadan	5	0.1
Dasanit	2	0.05
Parathion	2	1.0
Diazinon	2	0.75
Mocap	1	0.02
Herbicide		
Balan	26	0.05
Vernam	22	0.1
Lasso	11	0.05
Treflan	10	0.05
Butyrac	8	0.02
Dinoseb	8	0.1
Naptalam	4	0.1
Fungicide		
Benlate	40	0.2
Chlorothalonil	30	0.3
DBCP	4	0.5
Terraclor	2	1.0
Mancozeb	1	
Du-Ter	1	0.05

*Pesticide Ranking, percent of total acreage treated with pesticide type (insecticide, herbicide, etc.).

†From EPA Compendium of Registered Products. Tolerance from pesticides is defined as the minute trace permitted to be present in or on raw agricultural commodities (from Miller Pesticide Residue Amendment to Federal Food, Drug, and Cosmetic Act, 1954).

Source: EPA; SRI International.

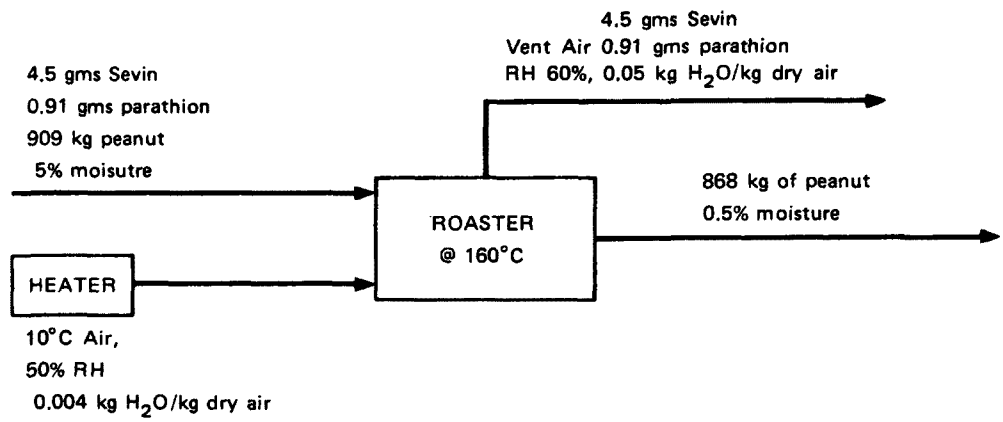

H_2O Balance

H_2O into roaster	909 x 0.05 =	45 kg
-H_2O in product	868 x 0.005 =	4.36 kg
H_2O evaporated		40.6 kg

Solid Balance

909 kg x 0.95 = x kg x 0.995

x = 868 kg

where x is the weight of roasted peanut.

Air Required

$$\frac{40.6 \text{ kg } H_2O}{(0.05 - 0.004) \text{ kg } H_2O/\text{kg dry air}} = 893 \text{ kg dry air} = 6.93 \times 10^2 m^3$$

Parathion concentration

$$\frac{0.002 \text{ lb}}{2.45 \times 10^4 \text{ scf}} = \frac{0.002 \times 454 \times 10^3 \text{ mg}}{2.45 \times 10^4 \times 0.028 \text{ m}^3}$$

$$= 1.32 \text{ mg/m}^3$$

Sevin Concentration

$$\frac{0.01 \text{ lb sevin}}{2.45 \times 10^4 \text{ scf}} = \frac{0.01 \times 454 \times 10^3 \text{ mg}}{2.45 \times 10^4 \times 0.028 \text{ m}^3}$$

$$= 6.62 \text{ mg/m}_3$$

SOURCE: SRI International.

Figure D-1 Flow sheet and material balance for peanut roasting.

TABLE D-2. COMPARISON OF PESTICIDE EMISSION FROM PEANUT ROASTING WITH OCCUPATIONAL STANDARD

Pesticides	Emission (mg/m^3)	Occupational standard (mg/m^3)[D-2]
Sevin	6.62	5
Parathion	1.32	0.1

Source: OSHA; SRI International.

REFERENCES

D-1 Woodroof, Jasper G., Peanuts: Production, Processing, Products, Avi Publishing Co., Westport, Connecticut, 1966.

D-2 "Occupational Safety and Health Standards, Subpart Z - Toxic and Hazardous Substances," Occupational Safety and Health Reporter, The Bureau of National Affairs, Inc., 1976.

Appendix E

SOURCES OF PHENOLIC COMPOUNDS IN CITRUS PROCESSING WASTEWATERS

Ismail and Wardowski[E-1] have reported on sources of phenolic-type compounds from citrus fruit processing operations. They found that plants using sodium o-phenylphenate (SOPP) in their detergent formulations exhibited high levels of phenolics, as shown in Table E-1. The main source of the phenolics was the fungicide SOPP, but a dye Citrus Red No. 2 and the fruit itself were major sources.

Phenolics are among the most widely distributed, naturally occurring compounds in fruits and vegetables. They are present at high levels in coffee, tea, orange juice, and apple juice. (See Table E-2.)

Table E-1. LEVELS OF PHENOLIC-TYPE COMPOUNDS IN SAMPLES TAKEN AT VARIOUS POINTS IN CITRUS PACKINGHOUSES IN THE RIDGE AND INDIAN RIVER DISTRICTS

Sample	Phenolic Content (ppm SOPP-equivalent)
Plain water rinse	6.28
Plain water rinse	12.38
Nonphenolic detergent rinse	32.47
Color-Add solution	6.28
Final rinse after SOPP application	51.80
Final rinse after SOPP application	98.47
Final rinse after SOPP application	106.71
Final rinse after SOPP application	214.18
Final rinse after SOPP application	1192.50
Final packinghouse effluent	105.24
Final packinghouse effluent	135.35

Table E-2. LEVELS OF FREE AND CONJUGATED PHENOLICS AS DETERMINED BY THE 4-AMINOANTIPYRINE METHOD IN FOUR COMMON BEVERAGES

Beverage	Phenolic Content (ppm SOPP-equivalent) Free	Conjugated
Orange juice	170.2	364.8
Apple juice	109.7	586.6
Tea	936.1	289.2
Coffee	1885.2	1891.3

Cold press oil (peel oils) from the extraction of oranges is one of three products from oranges, the other two being orange juice and peel. The peel oils contain natural fungicidal or bacteriostatic agents and have been known to cause problems with the operation of activated sludge systems.[E-2, E-3]

REFERENCES

E-1 Ismail, M. A., and W. F. Wardowski, "Phenolic Contaminants in Florida Citrus Packinghouse Effluents: Sources and Regulations," Florida State Horticulture Proceedings, Vol. 86, 1973 (published 1974).

E-2 Winter Garden Citrus Products Cooperative, Complete Mix Activated Sludge Treatment of Citrus Process Wastes, EPA 12060 EZY, August 1971.

E-3 Coca Cola Company Foods Division, Treatment of Citrus Processing Wastes, EPA 12060, October 1970.

Appendix F

PESTICIDE LEVELS IN WASTEWATERS FROM SWEET POTATO PROCESSING OPERATIONS

Sweet potato weavils have long been a serious pest in sweet potato storage areas in southwestern Louisiana. Before DDT was banned, about 1 ounce of 10% DDT dust was applied to each crate of potatoes to deter weavils. On a whole potato basis, this averages to about 100 ppm. Sweet potatoes were washed after storage, which reduced the DDT residue to 1 ppm or less. Impson, Epps, and Smilie[F-1] have studied sweet potato processing operations but their data are insufficient to allow quantification of the problem on the basis of production rate. Table F-1 shows the concentration of DDT in a 5000 gallon per hour wastewater stream before and after treatment. Note that DDT removed from the water will be present in the sludge and hence must be considered in the selection of method for solid waste disposal.

F-1. Impson, J. W., E. A Epps, Jr., and J. L. Smilie, "Removal of DDT from Sweet Potato Washwater," Bulletin of Environmental Contamination and Toxicology, 13 (1), 37 (1975).

TABLE F-1. DDT CONCENTRATIONS IN TREATED AND UNTREATED SWEET POTATO WASH WATER

Run	Treatment	DDT in Untreated Wash Water (ppb) Entrance, Pit #1	Exit, Pit #2	Percent removal after treatment
1	Check, no treatment	2,027	211	90%
2	Check, no treatment	300	226	25
3	10 lb lime/hour (1)	1,071	305	74
4	3 lb lime/1000 gal	12,495	630	95
5	6 lb lime/1000 gal	3,800	179	96
6	6 lb lime/1000 gal	6,108	192	97
7	12 lb lime/1000 gal	18,021	225	99
8	12 lb lime/1000 gal+ ferrous sulfate	18,609	481	97
9	6 lb lime/1000 gal, baffles & filter	7,734	185	98
10	6 lb lime/1000 gal, filter	13,796	78	99
11	6 lb lime/1000 gal, filter	4,045	35	99

Source: Reference F-1.

Appendix G

R&D WORK ON WASTEWATER REUSE FOR A CANNERY

INTRODUCTION

Reuse and recycling of wastewater in canning operations has the potential for greatly decreasing the volume of wastewater from the industry. Cascading reuse operations from high to low water quality uses or recycling in one operation (such as fluming or washing) have already been demonstrated. Questions concerning the public health aspects of reuse and recycle do arise, however, because of possible food contamination from recycled water containing pesticide residues, heavy metals, or pathogenic organisms. The EPA awarded Grant No. S803280 in August 1974 to Snokist Growers of Yakima, Washington, to conduct a 3-year project to test reuse of treated wastewater within a fruit processing operation.

BACKGROUND

Snokist Growers was initially awarded a grant to conduct testing of an aerobic wastewater treatment system beginning in August 1967. During the project it was demonstrated that activated sludge or contact stabilization treatments can provide greater than 90% removal of soluble organics and suspended solids from the effluent. The main commodities processed at this facility include apples, pears, peaches, plums, and some tomatoes for juice. [For more information see "Aerobic Treatment of Fruit Processing Wastes," Water Pollution Control Research Series 12060FAD(10/69).]

TREATMENT PLANT OPERATION

In the aeration tank of the activated sludge system (with a 3-day detention time), more than 99% of the soluble organic component of the wastewater (BOD) is removed and converted to suspended biological matter that is removed by settling in the final clarifier. Clarified effluent is split and a portion of it is given further treatment before it is reused in the cannery. The reusable portion is pumped through two pressure filters, and then chlorinated as shown in Figure G-1.

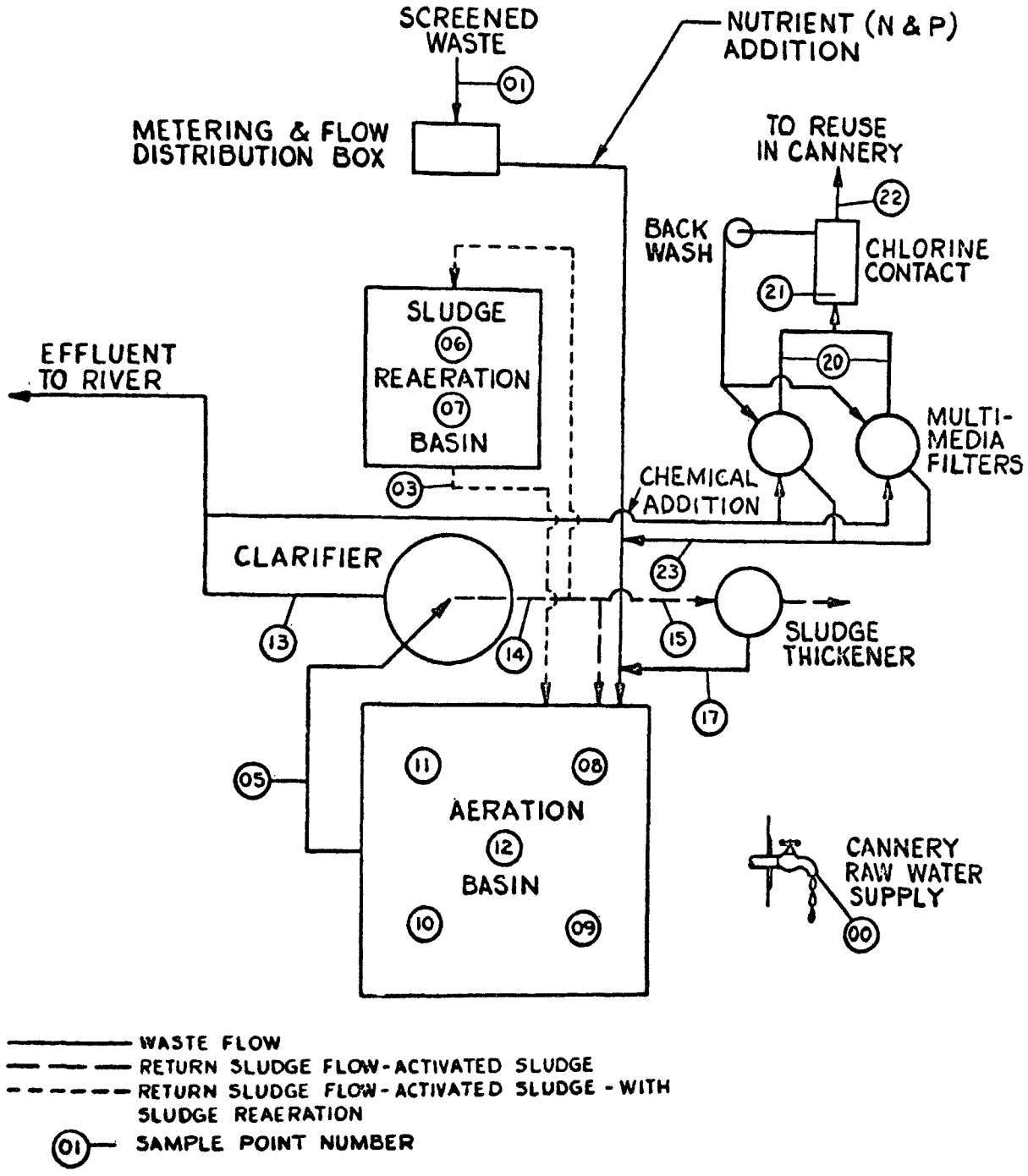

SOURCE: Detailed work plan for EPA Grant No. 2-803280, "Reuse of Treated Fruit Processing Wastewater Within a Cannery."

Figure G-1. Schematic flow diagram of wastewater treatment system for snokist growers.

The total plant wastewater flow averages less than 2 million gallons per day during the main canning season.

The reused water has been applied to equipment cleaning, boiler feed, and direct contact container cooling. Chemical and bacteriological tests to date indicate that the reused water appeared to be suitable for these uses.

WATER REUSE TESTING PROGRAM

The product water was analyzed for trace contaminants and the results were compared with those for the plant tap water supply. Table G-1 shows the results of pesticide analysis. Table G-2 shows the results of volatile halogenated organics analysis, and Table G-3 presents the results of trace metal analysis. The preliminary results indicate that the amounts of pesticides, halogenated organics, or trace metals in the wastewater are not significant relative to the plant water supply quantities. The multi-media filter to remove turbidity and suspended solids has not been as effective as expected. The alkalinity of the reused water is greater than that of tap water, probably due to caustic peeling. Hardness of the reused water appears to be slightly less than that of tap water. Chlorides and sulfates are both higher in the reused water than in the tap water. Monitoring of the bacteriological quality of reused water showed that fecal coliform organisms were suitably reduced during chlorination. However, the total coliform organism removal was not as consistent as that for fecal coliform organisms.

TABLE G-1. PESTICIDE CONCENTRATIONS IN REUSED AND TAP WATER AT SNOKIST GROWERS' FRUIT PROCESSING PLANT (μg/liter)

Description	Aldrin	BHC	Chlordane	p,p'-DDD	p,p'-D	o,p'-DDT	p,p'-DDT	Dieldrin	Endrin	Toxaphene	Heptachlor	Heptachlor Epoxide	Lindane	PCBs	Organo-phos. pesticides as parathion
Reused water	<0.001	<0.008	<0.005	<0.001	<0.001	<0.001	<0.003	<0.001	<0.003	<0.060	<0.001	<0.001	<0.016	<0.015	<0.010
Tap water	<0.001	<0.001	<0.005	<0.001	<0.001	<0.001	<0.003	<0.001	<0.003	<0.060	<0.001	<0.001	<0.001	<0.015	<0.010
Reused water	<0.001	<0.001	<0.005	<0.001	<0.001	<0.001	<0.003	<0.001	<0.003	<0.060	<0.001	<0.001	<0.001	<0.015	<0.010
Tap water	<0.001	<0.001	<0.005	<0.001	<0.001	<0.001	<0.003	<0.001	<0.003	<0.060	<0.001	<0.001	<0.001	<0.015	<0.010
Reused water	<0.001	<0.001	<0.005	<0.001	<0.001	<0.001	<0.003	<0.001	<0.003	<0.060	<0.001	<0.001	<0.001	<0.015	<0.010
Tap water	<0.001	<0.001	<0.005	<0.001	<0.001	<0.001	<0.003	<0.001	<0.003	<0.060	<0.001	<0.001	<0.001	<0.015	<0.010

Source: EPA Region X Laboratory, Seattle.

TABLE G-2. VOLATILE HALOGENATED ORGANICS--
SNOKIST GROWERS' WASTEWATER REUSE PROJECT
(ppb)

Date	Description	Volatile Chlorinated Organics as Chloroform
11-4-75	Reused Water	1000.K*
11-4-75	Tap Water	1000.K
11-17-75	Reused Water	3.K
11-18-75	Tap Water	20. (Confirmed by GC/MS)
12-16-75	Tap Water	3.K
12-16-75	Reused Water	3.K

* K indicates less than
The technique was improved by the second and third sampling for increased sensitivity.

Source: From EPA Region X Laboratory, Seattle, Washington.

TABLE G-3. TRACE METAL ANALYSES FOR REUSED AND TAP WATER AT SNOKIST GROWERS FRUIT PROCESSING PLANT
(ppm)

Metal	Reused water	Reused water	Reused water	Waste-water	Clarifier Effluent	Reused water	Tap water
Pb	<0.05	<0.05	<0.05	<0.05	<0.05	<0.05	<0.05
As	<0.05	<0.05	<0.05	Not done	Not done	Not done	Not done
Zn	0.50	0.50	0.02	Not done	Not done	0.15	Not done
Sn	Not done	Not done	Not done	<3.0	<3.0	<3.0	<3.0
Cu	<0.05	<0.05	<0.05	<0.05	<0.05	<0.05	<0.05
Cd	<0.03	<0.03	<0.03	<0.03	<0.03	<0.03	<0.03
Hg	<0.0002	<0.0002	0.0003	0.0004	0.0008	0.0009	0.001
Ca	6.0	7.0	6.0	11.6	11.0	11.0	12.5
Mg	<0.5	<0.5	<1.0	1.8	1.3	1.3	1.8
Fe	<0.1	<0.1	<0.1	0.9	<0.2	<0.2	<0.2
Na	60	60	60	17	24	22	15
K	17	16	15	16	7.0	7.0	3.0
Mn	<0.05	<0.05	<0.05	<0.05	<0.05	<0.05	<0.05
Al	<0.10	<0.10	<0.10	0.50	<0.2	2.2	<0.2

Source: EPA.

Appendix H

R&D WORK ON TREATMENT AND REUSE OF POULTRY PROCESSING WASTEWATER

INTRODUCTION

Sterling Processing Corporation, a company engaged in the slaughtering, eviscerating, and processing of poultry, is located in Oakland, MD. The community water supply serving the town of Oakland is of inadequate capacity to provide water to the poultry plant, and groundwater resources in the area are limited and of unsatisfactory quality. Production at the Sterling plant has been limited by the availability of potable water, with frequent interruptions to operations resulting from water shorages.

The Maryland State Department of Health was awarded EPA Grant No. 12060-FYG to study treatment and reuse of poultry processing wastewater at Sterling Processing Company from 1970 to 1973. The primary objective of the project was to demonstrate the technical and economical feasibility of reclaiming poultry processing wastewater for reuse where potable grade water was required.

TREATMENT PLANT OPERATION

Figure H-1 is a schematic flow diagram of wastewater treatment at Sterling Processing Corporation. Wastewater from the poultry eviscerating plant was screened and treated in two mechanically aerated lagoons in series. The secondary lagoon effluent was chlorinated. A portion of the effluent received further treatment before it was reused in the eviscerating plant, whereas the rest was discharged to the river.

To reclaim a portion of lagoon effluent, an advanced treatment system was used. The lagoon effluent was first microstrained for solid removal, and the microstrained effluent was then treated by coagulation and sedimentation for the removal of colloidal solids. Finally, the water was chlorinated and filtered prior to combining with well water.

WATER REUSE TESTING PROGRAM

Table H-1 compares the water quality in raw wastewater and lagoon

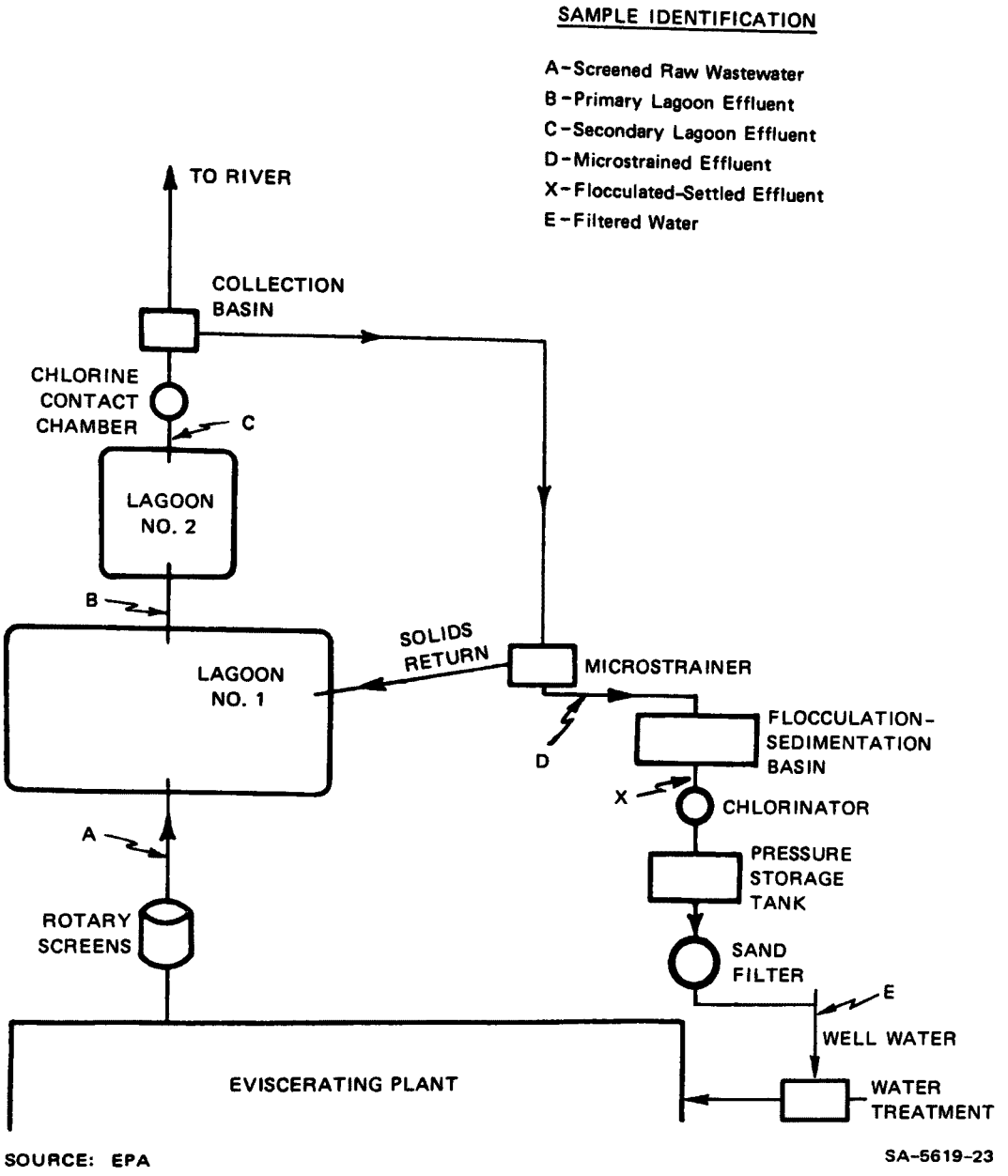

Figure H-1. Wastewater treatment and water reclaiming facilities for sterling processing corporation.

effluents. Table H-2 indicates the effectiveness of each step in an advanced treatment system in removing contaminants.

Results of chemical and physical examinations of reclaimed water are shown in Table H-3.

During the study period, 352 bacteriological samples of filtered water from the advanced water treatment system were collected and examined for coliform, fecal streptococci, and total plate counts. A chlorine application rate of 9.09 kg/day (8 mg/liter) prior to filtering resulted in consistent bacteriological counts < 3 coliform/100 ml; < 1 fecal streptococci/100 ml; and a standard plate count of < 100/ml. The chlorination rate of 27-36 kg/day, necessary to reach "breakpoint", provides additional assurance of bacteriological safety of the water.

TABLE H-1. EFFECTIVENESS OF WASTEWATER LAGOON SYSTEM*

(mg/liter)

	Raw Wastewater			Primary Lagoon Effluent			Secondary Lagoon Effluent		
	N	$\bar{X}$	$\bar{O}$	N	$\bar{X}$	$\bar{O}$	N	$\bar{X}$	$\bar{O}$
BOD_5	148	543	229	79	251	176	210	39	40
COD	7	863	183	8	235	83	8	91	20
Suspended Solids	119	831	464	67	392	342	214	117	100
Grease	47	403	239	10	95	90	78	18	17

*N = Number of Samples; $\bar{X}$ = Mean Value; $\bar{O}$ = Standard Deviation.

Source: EPA.

TABLE H-2. EFFECTIVENSS OF ADVANCED TREATMENT SYSTEM*

	Lagoon Effluent		Microstrainer Effluent-70μ		Settled Water		Filtered Water (Sand)	
	N	M	N	M	N	M	N	M
BOD_5	36	24	25	10	25	6	40	0.5
COD	4	91	4	79	4	49	4	4.1
Suspended solids	37	149	25	96	25	38	32	5.1
Grease	18	13	8	6	5	4	16	3.6

*N = Number; M = Median Value

Source: EPA .

TABLE H-3. CHEMICAL-PHYSICAL QUALITY OF RECLAIMED WATER*

(mg/liter)

	Drinking Water Standard-1962	N	$\bar{X}$	$\bar{O}$
Turbidity (JTU)	5	54	3.5	1
Color	15	90	5	7
Pesticides		16	0	
pH		207	6.6	1.4
Alkalinity		101	104	57
Hardness		22	131	24
Dissolved solids	500	158	335	129
Chloride	250	162	117	53
Cyanide	0.2	8	0	
Fluoride	1	23	0.21	0.13
Nitrate (NO_3)	45	89	31	8
Phosphate		47	10	2
Sulfate	250	23	13	5
Aluminum		17	0.03	0.04
Arsenic	0.05	26	0.01	0.01
Cadmium	0.01	8	<0.01	0
Calcium		26	46	12
Chromium^{6+}	0.05	8	<0.01	0
Copper	1.0	26	0.06	0.01
Iron	0.3	27	0.27	0.19
Lead	0.05	8	0.01	0.01
Manganese	0.05	10	0.02	0.02
Mercury	0.005	8	0.003	0.003
Potassium		20	10.7	9.5
Selenium	0.01	8	<0.01	0
Silver	0.05	8	<0.01	0
Sodium	270	19	21	15

*N - Number of Samples; $\bar{X}$ = Mean Value; $\bar{O}$ = Standard Deviation

Source: EPA.

TECHNICAL REPORT DATA
(Please read Instructions on the reverse before completing)

1. REPORT NO. EPA-600/2-79-009	2.	3. RECIPIENT'S ACCESSION NO.
4. TITLE AND SUBTITLE Overview of the Environmental Control Measures and Problems in the Food Processing Industries		5. REPORT DATE January 1979 issuing date
		6. PERFORMING ORGANIZATION CODE
7. AUTHOR(S) J.L. Jones, M.C.T. Kuo, P.E. Kyle, S.B. Radding, K.T. Semrau, L.P. Somogyi		8. PERFORMING ORGANIZATION REPORT NO.
9. PERFORMING ORGANIZATION NAME AND ADDRESS SRI International 333 Ravenswood Ave. Menlo Park, CA 94025		10. PROGRAM ELEMENT NO. 1BB610 1AB604
		11. CONTRACT/GRANT NO. R804642-01-2
12. SPONSORING AGENCY NAME AND ADDRESS Industrial Environmental Research Lab. - Cinn, OH Office of Research and Development U. S. Environmental Protection Agency Cincinnati, Ohio 45268		13. TYPE OF REPORT AND PERIOD COVERED Final
		14. SPONSORING AGENCY CODE EPA/600/12

15. SUPPLEMENTARY NOTES

16. ABSTRACT

In conducting the assessment of the pollution sources and control measures utilized by the food processing industries (those industries listed under SIC 20), the water pollution control, air pollution control and solid waste management practices of 19 specific food processing industries were reviewed. The 19 industries analyzed represent in excess of 75% of the total value of shipments by the food processing industries. One specific objective of the assessment was to identify any potential toxic substances emission problems. The method of approach used in conducting the study was to prepare process descriptions on a unit operations basis for each industry and to identify the sources of emissions and effluents from each major step in the process. These process descriptions along with a general industry description are contained in 18 unpublished appendices available from the EPA Food and Wood Products Branch in Cincinnati, Ohio. The published volume of the report and its eight published appendices discuss the major sources of water pollution, air pollution, and solid wastes from the food processing industries. The appendices address specific topics such as SO_x emissions, polynuclear aromatic hydrocarbons, phenolic compounds, and water reuse (including pesticides).

17. KEY WORDS AND DOCUMENT ANALYSIS

a. DESCRIPTORS	b. IDENTIFIERS/OPEN ENDED TERMS	c. COSATI Field/Group
Air pollution Food Processing Waste water	Solid wastes Water utilization Waste characterization	13B

18. DISTRIBUTION STATEMENT RELEASE TO PUBLIC	19. SECURITY CLASS (This Report) Unclassified	21. NO. OF PAGES 133
	20. SECURITY CLASS (This page) Unclassified	22. PRICE

EPA Form 2220-1 (9-73)

☆ U. S. GOVERNMENT PRINTING OFFICE: 1979 — 657-060/1575