United States
Environmental Protection
Agency

Industrial Environmental Research
Laboratory
Cincinnati OH 45268

EPA-600/2-79-207
December 1979

Research and Development

EPA

Volatile Component Recovery from Sulfite Evaporator Condensate

RESEARCH REPORTING SERIES

Research reports of the Office of Research and Development, U.S. Environmental Protection Agency, have been grouped into nine series. These nine broad categories were established to facilitate further development and application of environmental technology. Elimination of traditional grouping was consciously planned to foster technology transfer and a maximum interface in related fields. The nine series are:

1. Environmental Health Effects Research
2. Environmental Protection Technology
3. Ecological Research
4. Environmental Monitoring
5. Socioeconomic Environmental Studies
6. Scientific and Technical Assessment Reports (STAR)
7. Interagency Energy-Environment Research and Development
8. "Special" Reports
9. Miscellaneous Reports

This report has been assigned to the ENVIRONMENTAL PROTECTION TECHNOLOGY series. This series describes research performed to develop and demonstrate instrumentation, equipment, and methodology to repair or prevent environmental degradation from point and non-point sources of pollution. This work provides the new or improved technology required for the control and treatment of pollution sources to meet environmental quality standards.

This document is available to the public through the National Technical Information Service, Springfield, Virginia 22161.

EPA-600/2-79-207
December 1979

VOLATILE COMPONENT RECOVERY FROM SULFITE EVAPORATOR CONDENSATE

by

Walter A. Sherman
William A. Dryer
John D. Michna
Flambeau Paper Co.
Park Falls, WI 54552

Grant No. S803302-01-0

Project Officers

Donald L. Wilson and Ralph H. Scott
Industrial Pollution Control Division
Industrial Environmental Research Laboratory
Cincinnati, Ohio 45268

INDUSTRIAL ENVIRONMENTAL RESEARCH LABORATORY
OFFICE OF RESEARCH AND DEVELOPMENT
U.S. ENVIRONMENTAL PROTECTION AGENCY
CINCINNATI, OHIO 45268

DISCLAIMER

This report has been reviewed by the Industrial Environmental Research Laboratory, Cincinnati, OH, U.S. Environmental Protection Agency, and approved for publication. Approval does not signify that the contents necessarily reflect the views and policies of the U.S. Environmental Protection Agency, nor does mention of trade names or commercial products constitute endorsement or recommendation for use.

FOREWORD

When energy and material resources are extracted, processed, converted and used, the related pollutional impacts on our environment and even on our health often require that new and increasingly more efficient pollution control methods be used. The Industrial Environmental Research Laboratory - Cincinnati (IERL-CI) assists in developing and demonstrating new and improved methodologies that will meet these needs both efficiently and economically.

This report "VOLATILE COMPONENT RECOVERY FROM SULFITE EVAPORATOR CONDENSATE" is intended to show how volatile chemicals can be stripped from or adsorbed from Sulfite Evaporator Condensate and be purified so that they can be sold as raw materials for other processes. This process should allow a company to remove certain chemicals from its waste stream and reduce the BOD load to its effluent treatment plant. The sale of the recovered chemicals should be able to pay for the operating cost of the plant. For further information, please contact the Food and Wood Products Branch of the Industrial Environmental Research Laboratory, Cincinnati, Ohio.

David G. Stephan
Director
Industrial Environmental Research Laboratory
Cincinnati

ABSTRACT

This study is on the operation of a demonstration unit to remove sulfur dioxide, methanol, furfural and acetic acid from evaporator condensate produced from a calcium base acid sulfite cook. This unit consisted of a steam stripper, vent tank for SO_2 recovery, activated carbon adsorption columns and fractional distillation columns.

The steam stripper and the fractional distillation units used to purify the stripped material operated very successfully with little maintenance. During an extended test run, this stripping process removed 84.1% of the SO_2, 100% of the furfural, and 95.5% of the methanol. The steam rate required for stripping was 2.8% or 27.7#'s of steam/1000#'s of condensate stripped. The SO_2 is separated, cooled and returned to the sulfite acid making system. Furfural is recovered at 90% purity which can be sold as crude but Flambeau purifies it to a 99.5%. Methanol is recovered with less than 1% water and is suitable for burning or some industrial uses.

The stripping steam is also used to heat the first effect of the multi-effect evaporator.

Activated carbon adsorption and ethyl alcohol regeneration of the carbon removes acetic acid from the condensate and recovers it as ethyl acetate, which upon concentration by fractional distillation is brought to 99.5% purity. This part of the process is still in the development stage.

This report was submitted in fulfillment of grant #S-803 302-01-0 by the Flambeau Paper Co. under the partial sponsorship of the U.S. Environmental Protection Agency. This report covers the period from June 1976 to June 1978, and the work was completed as of June 1978.

CONTENTS

Foreword iii

Abstract iv

Figures vi

Tables vii

Abbreviations and Symbols viii

Acknowledgment ix

1. Introduction 1

2. Conclusions 5

3. Recommendations 7

4. Operation and Results 8

5. Economic Evaluation 32

6. Analytical Procedures 35

References 36

Appendices . . . . . .

A. Steam Stripping Tables 37

B. Heat and Material Balances Around Fractionators. 46

C. Abstracts from Pertinent Patents 57

D. Equipment Sepcifications 59

Glossary 62

FIGURES

Number		Page
1	Original Design Operation Flowsheet	9
2	Modified Operation Flowsheet	10
3	Carbon Loading Curves	12
4	Carbon Column Regeneration	18
5	Regeneration Curve 9/10/77	19
6	Regeneration Curve 10/18/77	21
7	Mini-Fractionator	24
8	Purification of Crude Furfural	28

TABLES

Number		Page
1	Predicted Recovery from Flambeau Condensate	2
2	Steam Stripping	14
3	Operating Data, 10-Day Trial	32
1A	Feed to Steam Stripper	38
2A	% Removal by Steam Stripper	39
1B	Heat and Material Balance for Steam Stripping . . .	41
2B	Heat and Material Baldnce For #1 Fractionator . . .	43
3B	Heat and Material Balance for #2 Fractionator . . .	44
4B	Heat and Material Balance for #3 Fractionator Feed Tank	45
5B	Heat and Material Balance for #3 Fractionator . . .	47
6B	Heat and Material Balance for #7 Fractionator . . .	48
7B	Heat and Material Balance for #7 Fractionator 92 to 98% Furfural Purity	50
8B	Heat and Material Balance for #7 Fractionator .98 to 99.6% Furfural Purity	51
9B	Heat and Material Balance for #4 Feed Tank	52
10B	Heat and Material Balance for #5 Fractionator . .	53
11B	Heat and Material Balance for EtAc Separator and #6 Fractionator	55
12B	Heat and Material Balance for #10 Fractionator . .	56

LIST OF ABBREVIATIONS AND SYMBOLS

ABBREVIATIONS

atm.....Atmosphere
BOD.....5 day Biochemical Oxygen Demand
Btms....bottoms
COD ....Chemical Oxygen Demand
cond....condenser
disch...discharge
educt...eductors
evap....evaporator
ex......exchanger
fig.....figure
ft .....feet
fr......fractionator
fract...fractionator
fufr....furfural
gal.....gallons
gpm.....gallons/minute
hex.....heat exchanger
in......inches
I.P.C...Institute of Paper Chemistry, Appleton, Wisconsin
kg.....kilograms
kg/s ..kilograms/sec
kJ.....kilojoule
kPa....kilopascal
lb.....pound
m.....meter
m^3.....cubic meter
m^3/s ..cubic meter/second
min....minute
mos....months
No.....number
ovrhd..overhead
reg....regeneration
regen..regeneration
s......second or steam
sec ...second
sep ...separator
stg ...storage
strip..stripper
T......tank
T.P....Treatment Plant

SYMBOLS

C.......Centigrade
EtAc....Ethyl Acetate
EtOH ...Ethanol (ethyl alcohol)
F.......Farenheit
HAc.....Acetic Acid
H_2O.....Water
MeAc...Methyl Acetate
MeOH...Methanol (methyl alcohol)
SO_2....Sulfur Dioxide
#......number or pound
#/hr...pound per hour
#/day..pound per day

ACKNOWLEDGMENT

The Flambeau Paper Co. wishes to acknowledge the Environmental Protection Agency Grant No. S-803302-01-0 of $500,000 to aid in installing and starting the Demonstration Plant for "VOLATILE COMPONENTS RECOVER FROM SULFITE EVAPORATOR CONDENSATE".

Mr. Kenneth W. Baierl, Sr. was responsible for developing much of the technology and invented new cost saving techniques. Previous work had been done by Mr. Baierl at Scott Paper Company at Everett, Washington and the Institute of Paper Chemistry in Appleton, Wisconsin on this recovery process.

Marathon Engineering, Inc. of Menasha, Wisconsin detailed the engineering and C. R. Meyer & Sons, Co. of Oshkosh, Wisconsin built the demonstration plant.

William A. Dryer, Director of Research and Development and John D. Michna developed new techniques and contributed to the success of chemical recovery.

SECTION 1

INTRODUCTION

If a pulp mill recovers a high percentage of spent sulfite liquor with modern pulp washing equipment, then the BOD obtained from the evaporation of this spent liquor will be a large portion of the total BOD discharged from the mill. Several researchers have analyzed condensates and encouraged study of methods for separating the recoverable materials.

Sulfite evaporator condensate and sulfite digester blow gas both contain SO_2, methanol, furfural, and acetic acid. SO_2 can be recycled to the acid plant; methanol, furfural, and acetic acid are all commercial chemicals with established prices and markets. Previous work in recovery of these chemicals had been done by the Pulp Manufacturers' Research League, the Institute of Paper Chemistry (IPC), and by Mr. Kenneth W. Baierl, Sr., of Scott Paper Company. When Scott discontinued work in this area, Mr. Baierl offered his services to the IPC. IPC developed a joint research project, IPC Project 3100, which was cosupported by the U.S. Environmental Protection Agency (EPA), the Wisconsin Department of Natural Resoureces, and ten pulp mill organizations. The resulting report by K.W. Baierl, et al., was entitled "Treatment of Sulfite Evaporator Condensates for Recovery of Volatile Components."[1] The report reviewed a year's operation of a pilot plant at a Consolidated Papers Corporation sulfite mill in Appleton, Wisconsin, and included material, heat and BOD balances.

The research demonstrated that the process could recover the four chemicals of interest in reusable and salable form. The researchers predicted from their work that the process would reduce BOD in the condensate by 90 percent on clean condensate and by 60 percent on contaminated condensate.

Samples of evaporator condensates were submitted by sulfite mills supporting the project. The test results indicated the amounts of each chemical available in the condensate, as well as the levels of COD and BOD. Flambeau decided to support further pilot work in the summer of 1973 to determine if the process would be worth a full-scale pilot study.

In 1974 a larger-scale pilot study was performed to develop

design data for a mill-scale demonstration of the recovery system and to more accurately determine the expected chemical yields. These further pilot studies provided design data and showed a larger chemical recovery potential than was calculated in 1974. Predicted recoveries are shown in Table 1.

TABLE 1 - PREDICTED RECOVERY FROM FLAMBEAU CONDENSATE

Chemicals to be Recovered	1973 lbs/day	1973 kg/day	1974 lbs/day	1974 kg/day
Sulfur Dioxide	2,448	1,110.4	2,448	1,110.4
Methanol	1,320	598.7	2,856	1,295.5
Furfural	672	304.8	1,560	707.6
Acetic Acid (in 1973) (As Ethyl Acetate in 1974)	6,216	2,819.6	19,984	9,064.7

Basis: 44% Hardwood, 56% softwood in Flambeau sulfite pulping furnish.

An increase in the percentage of hardwood in the furnish was planned because condensate from hardwood sulfite liquor evaporation contains more of the desired organic chemicals than softwood, and because chemical recovery would thus appear even more attractive.

Final design incorporated certain novel ideas including those in U.S. Patent No. 4,002,525, filed by Kenneth W. Baierl, Sr., and assigned to Flambeau Paper Company. This patent is called "Chemical Recovery from Waste Liquors Utilizing Indirect Heat Exchangers in Multi-Stage Evaporation Plus Contact Steam Stripping."[2] The proposed process makes steam stripping of condensates economically attractive by substantially reducing steam requirements and by improving stripping efficiency. Later developments during the design work resulted in new concepts, such as "Chemical Concentration by Adsorption,"[3] covered under U.S. Patent No. 4,016,180. This patent was also filed by Kenneth W. Baierl, Sr., and assigned to Flambeau Paper Company.

Still further developments included a new concept in furfural purification described in U.S. Patent No. 4,071,398, entitled "Chemical Concentration by Sequential Activated Carbon Adsorption and Fractionation."[4] This was invented by Kenneth W. Baierl, Sr., and assigned to Flambeau Paper Company. This

patent makes it possible to concentrate and remove the crude 90 percent furfural "oil" for further purification to 99.5 percent and to recycle the dilute water solution of furfural for further concentration.

On April 12, 1974, Flambeau applied to the EPA for a demonstration grant of $500,000. The EPA authorized Grant No. S-803302-01-0 under the name, "Treatment of Evaporator Condensate for Recovery of Volatile Components" on June 25, 1974. Ralph H. Scott, Chief, Paper and Forest Industries, was Project Officer for the EPA. The Project Manager for Flambeau was Walter A. Sherman, Vice President and Assistant General Manager.

The "EPA Determination of Rights"[5] to the inventions patented has released the patents to Flambeau Paper Company. The EPA "deems it to be very much in the public interest to encourage development, demonstration, and marketing of said reported inventions as a means, if successful of conservation of materials, waste load reduction and energy use reduction." This release was granted on the basis that Flambeau would encourage the use of these processes by others, for either the recovery of chemicals or for the reduction of steam and fuel. Flambeau Paper Company has actively encouraged other pulp mills and industries to install the Chemical Recovery Plant, but no such installations have occurred.

The Flambeau evaporator condensate contains about 0.05 percent sulfur dioxide, 0.05 percent methanol, 0.7 percent acetic acid and 0.05 percent furfural. This stream, which is only about 10 percent of the total flow to the effluent treatment plant contributes over 50 percent of the total BOD_5. Sulphur dioxide, methanol, and furfural can be removed by steam stripping. Acetic acid can be adsorbed on activated carbon.

The Flambeau steam stripping system uses the steam required to operate the evaporators for the stripping process. This steam and volatile materials are then condensed in the first evaporator effect. The noncondensibles are sent to our acid plan where the sulfur dioxide is used to produce more cooking acid. The first fractionator separates the water from the methanol and crude furfural. The second fractionator separates the methanol from the crude furfural. Although crude furfural can be sold as is, Flambeau uses another fractionator and distills the crude furfural into a 99.5% pure production for which the demand is greater.

The acetic acid is removed from the carbon using a nonthermal regeneration process. The activated carbon is used as a catalyst, and hot ethanol reacts with the acetic acid to produce ethyl acetate which is then vaporized out of the carbon.

Should any furfural enter the carbon tower, it is removed by using a hot ethanol extraction. Four fractionators are used to recover any unused ethanol and to purify the ethyl acetate. This process is semi-automated and can be operated by two men on each shift.

SECTION 2

CONCLUSIONS

This demonstration project can be divided into two parts - steam stripping and carbon adsorption - both with chemical recovery.

STEAM STRIPPING

Steam stripping has been a demonstrated success. Removals of 100 percent of the furfural, 98.8 percent of the methanol, 84.1 percent of the sulfur dioxide, and 40.2 percent of the BOD sent to the stripper were achieved. A steam rate in the stripper was 2.8 percent based on the weight of the condensate. An additional 0.378 kg/s (3000 lbs/hr) of steam was necessary to operate the fractionators to produce methanol with less than 1 percent water, and to produce a 99.5 percent furfural product.

The steam stripper, vent tank, and the first and second fractionators required for this process require little maintenance or supervision. If the fractionators were placed in the evaporator area, they could be handled by the evaporator operator. The production of the 99.5 percent furfural, which is accomplished once or twice a week by vacuum distillation, requires about 20 manhours of additional labor. This fractionator must be cleaned about three times a year, requiring 30 manhours per clean-up.

The cost of the steam stripper, vent tank, and the #1,2, & 7 fractionators were $878,140 in 1976 dollars. The operating cost of this unit is $774 per day while the value of the chemicals recovered averages $735 per day. The capital cost and net operating cost may be justified at least in part by the decrease in the cost of other effluent treatment facilities.

CARBON ADSORPTION

Operating problems arose in the carbon adsorption phase of this project. The capital cost for the carbon towers, the 4 fractionators, and the necessary tankage was $1,659,838. The amount of acetic acid converted to ethyl acetate and the recovery of ethyl acetate in a salable form determines the net operating cost of this project. While steam stripping can be operated without carbon adsorption, carbon adsorption can not

be operated without steam stripping. Therefore, operating cost for both steam stripping and carbon adsorption must be calculated together. During the 10 day trial period, we produced $481 per day of salable chemicals at an operating cost of $1008 per day. Had we been able to convert all of the acetic acid into ethyl acetate, we would produce $5519 per day of salable chemicals at an operating cost of $3134 per day, and at the same time the BOD load to the treatment plant would have been reduced by 7710 kg/day (17,000 lbs.).

Although ethyl acetate can be produced in commercial quantities with the existing equipment, the life of the carbon catalyst is a critical question. Conclusions regarding this aspect of the project include the following:

1. Dirty condensate should not be processed, as some 60 percent of the spent liquor in this feed is adsorbed by the carbon.

2. Steam stripping was deemed necessary as a preliminary step to carbon adsorption.

3. Furfural and sulfur dioxide should not enter the acetic acid adsorption tower, as they will block acetic acid adsorption sites and shorten carbon life.

4. The steam used in regeneration must not contain chemicals which might poison the carbon. One such chemical is octadecylamine, a filming amine used to prevent corrosion in steam handling equipment.

5. Channeling in the carbon towers must be recognized.

6. For chemical regeneration, the carbon tower must be relatively small in diameter to provide a suitable vapor velocity with a minimum amount of regenerant.

7. If the adsorption of acetic acid can be accomplished without the loss of carbon life, the return realized from the sale of ethyl acetate would pay for the operating cost of the plant.

SECTION 3

RECOMMENDATIONS

The steam stripping phase of this project with its chemical recovery has performed well and should be put into commercial operation.

The carbon adsorption phase of this project will require further work to prove all of the causes for the loss of carbon life. This work should be conducted using new carbon. Only clean condensate which has been steam stripped prior to carbon adsorption should be used. Care should be taken to avoid introduction of furfural, sulfur dioxide, filming amine, or any other chemical compound preferentially adsorbed on the carbon active sites.

SECTION 4

OPERATION AND RESULTS

During this project two major configurations of the recovery system were used. That shown in Figure 2 was developed to solve some of the problems which showed up in the initial Figure 1 design where steam stripping was done after carbon adsorption to recover any ethanol left in the carbon after regeneration.

CONDENSATE SEPARATION

Vent Tank

The condensate streams are separated at the evaporators. Condensate from the surface condenser is used to wash the evaporator. It was found that the condensate from the operating effects of the evaporator contain only about 0.002% sulfur dioxide by weight. Since the vent tank could not reduce the sulfur dioxide content below this level, this condensate is not sent to the vent tank.

The condensate from the 3 condensers which are part of the vacuum system for our evaporators, is collected and sent to the vent tank. (Figure 1) This condensate contains between 0.5 to 1.0% sulfur dioxide. It was found early in our work that if we were to remove the sulfur dioxide, this condensate would have to be heated to at least 90°C (194°F). To do this a steam sparger was installed in the bottom of this tank. The vapors from this tank are condensed in the vent condenser. Sulfur dioxide does not condense when the water and recovered chemicals are condensed and the SO_2 is sent to the acid plant for the production of calcium base cooking acid. The water and chemicals are returned to the vent tank from the vent condenser.

During the month of December 1977, records were kept of the amount of sulfur dioxide being removed by the vent tank. It averaged 94.4% with a maximum of 99.8% and a minimum of 74.6%. While this method of sulfur dioxide removal is essential, the variation in the results dictated that a more positive method of sulfur dioxide removal, such as steam stripping, must be employed to insure that only a trace amount of SO_2 would enter the adsorption towers.

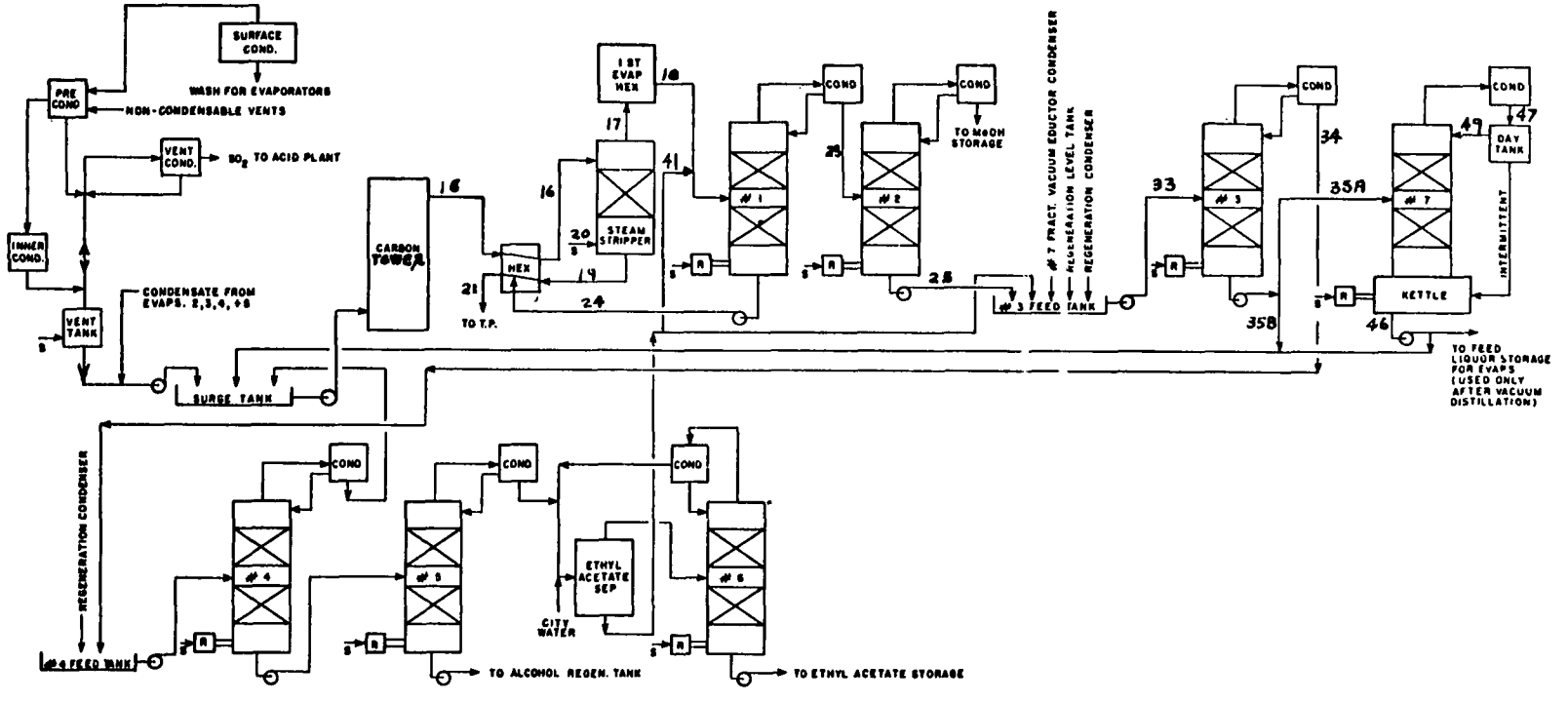

FIGURE 1
ORIGINAL DESIGN OPERATION FLOWSHEET

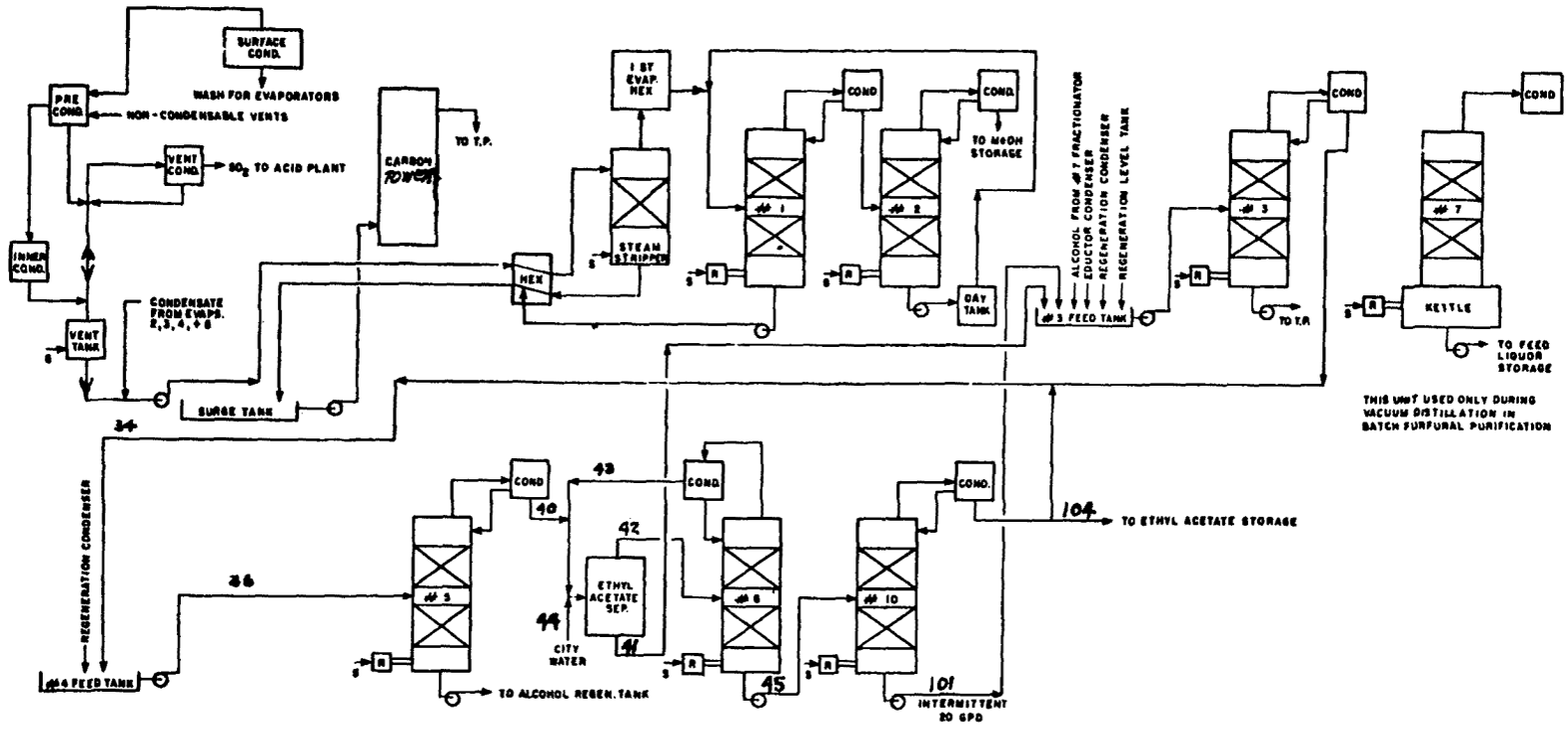

FIGURE 2
MODIFIED OPERATION FLOWSHEET

Surge Tank

The condensate from the vent tank and from the last four effects of the evaporators are combined and sent to the surge tank. This tank serves two purposes. It allows the carbon adsorption tower to be fed at a constant rate. It also provides storage to hold the condensate which has to be drained from the tower prior to regeneration and to fill the tower once the regeneration is complete.

All the condensate is strained to remove suspended solids before going to the surge tank. These strainers became quite a problem. When the columns were first started they became plugged with carbon fines during the first step in regeneration. Also when the vent tank was not working properly, they plugged with sulfur compounds. Poly-propylene bag strainers were finally secured for these strainers which reduced the amount of time needed for cleaning. Steam stripping prior to carbon adsorption finally cured the problem.

CARBON ADSORPTION, STEAM STRIPPING #1 AND #2 FRACTIONATORS

Carbon Adsorption

These four units work as a group during the carbon adsorption cycle. The surge tank condensate, which contains about 0.002% sulfur dioxide, 0.05% methanol, 0.7% acetic acid, 0.05% furfural, and 0.01% ethanol, is fed to one of the two carbon adsorption towers. At the start, all of the chemicals are adsorbed on the carbon (Figure 2). Once the adsorption sites are full, acetic acid and furfural easily replace the methanol and ethanol which break through first and are sent to the steam stripper for recovery. Acetic acid is next to break through. Carbon adsorption is considered complete at some point between where the actic acid first breaks through and where the acetic acid concentration leaving the tower equals the concentration being fed to the tower.

Figure 3 shows that the chemical composition of the condensate going to the carbon column is never constant. It will depend on the type of wood cooked, which evaporator is in wash, the condition of the evaporator with regard to air leakage, and the length of time since the last clean up. These four sets of curves show that the acetic acid concentration vary up to 12% during any one carbon loading.

These curves also show that the amount of chemicals which can be adsorbed on the carbon varies. The higher the concentration of the chemicals going to the adsorption tower, the greater the amount of chemicals the tower will adsorb. The

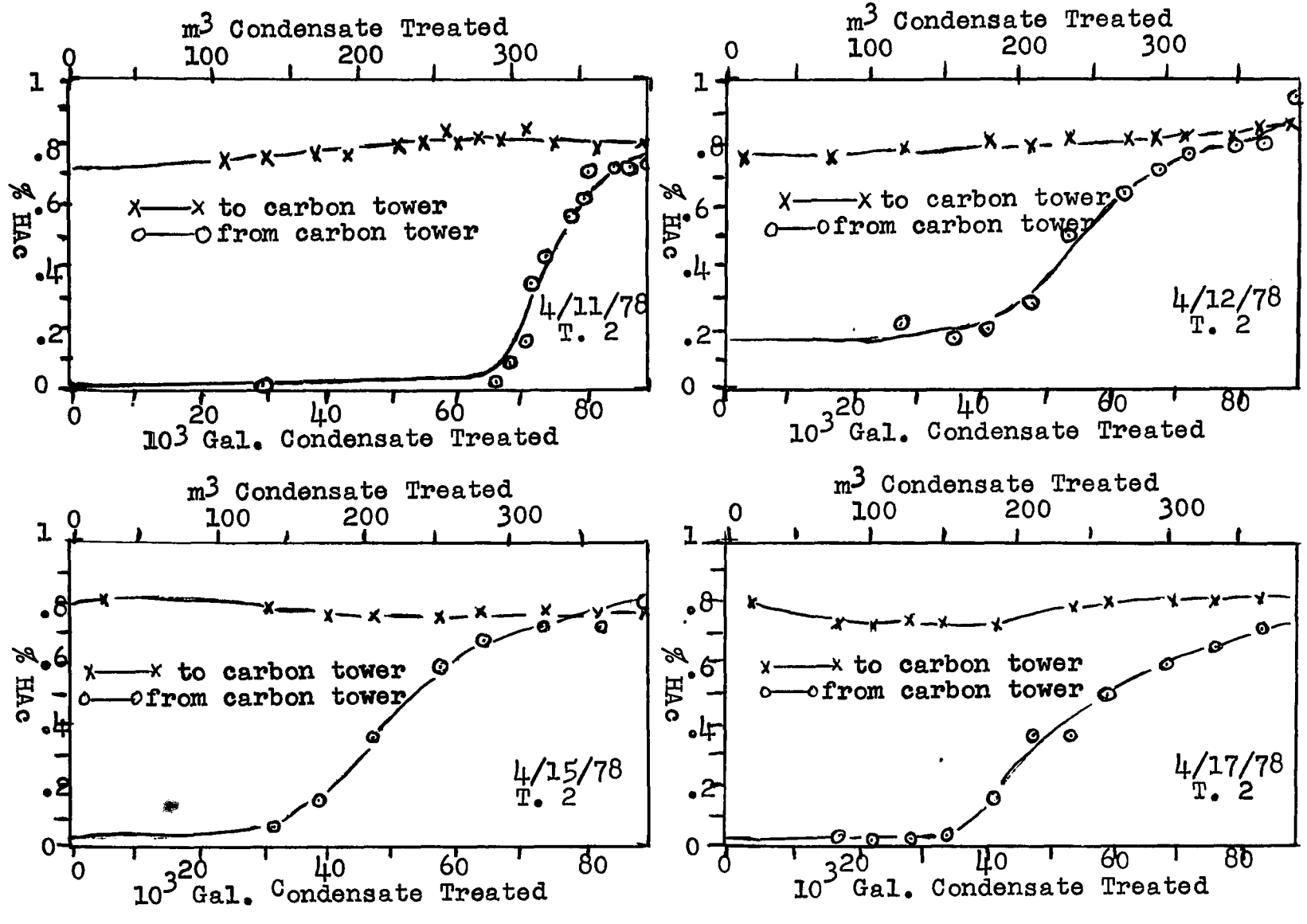

Figure 3. Carbon Loading Curves.

condition of the carbon plays an important role. If the adsorption sights are blinded by spent liquor, sulfur dioxide, furfural which is not removed during a regeneration, or in our case contaminated steam used for purging the tower, then adsorption will be reduced. Likewise, if there should be channeling in the tower either during the adsorption phase or the regeneration phase, the adsorption capacity of the carbon tower will be reduced. The type of carbon used and whether it is new or thermally regenerated may also affect adsorption. When the plant was started with new carbon, we were able to adsorb the chemicals from about 378 m^3 (100,000 gal.) of condensate before the acetic acid would break through. Toward the end of the project, the acetic acid break through was occurring between 151 m^3 to 227 m^3 (40,000 to 60,000 gal.) of condensate. If we were to operate on a continuous basis, it would have been necessary for us to treat about 340 m^3 (90,000 gal.) of condensate before break through under ideal conditions or 492 m^3 (130,000 gal.) under normal operating conditions. We were not able to consistently maintain either of these goals. Figure 3 illustrates the importance of a thorough regeneration prior to an adsorption. On April 11th, almost 286 cubic meters (65,000 gal.) of condensate was treated before break through. On April 15th, using the same carbon, only 132 cubic meters (30,000 gal.) of condensate was treated before break through. This shows that prior to the April 15th adsorption, many of the carbon adsorption sights were not available to adsorb acetic acid because of a poor regeneration.

During the final three months of operations, octadcylamine was removed from the steam. Sight glasses were set up both at the evaporators and the recovery plant to monitor condensate going to the carbon column. If the condensate was not colorless it was sent directly to the effluent treatment plant. The condensate was stripped before going to the carbon towers. These steps have increased the amount of liquid which could be treated prior to regeneration, but only the replacement of the carbon by new or thermally regenerated carbon will provide full adsorption capacity.

Steam Stripping

Except for the last three months, the treated condensate leaving the carbon towers was sent to the steam stripper for enrighment. Steam on the way to the multiple effect evaporator was used as the stripping steam. &U.S. Patent #4002525) (Figure 1). This allowed the use of 33% stripping steam in the stripper. Of this stripping steam used, 96.4% was recovered for operating the evaporators. As this steam passed through the stripper, it removed all of the alcohols, acetates, and any furfural which remained in the treated condensate. The stripped condensate was then sent to the effluent treatment plant.

During December 1977, samples taken on the feed to and on the effluent from the steam stripper showed:

TABLE 2 STEAM STRIPPING

	To Steam Stripper kg/24 Hr.	#/24 Hr.	% Removed by Steam Stripper
BOD	7,721	17,021	40.2
MeAc	10	22	100
MeOH	631	1,392	98.8
EtOH	327	720	100
HAc	4,445	9,800	42.4
Furf.	417	920	100
SO_2	16	36	84.1

The steam stripper effectively removes all of the methyl acetate, methanol, ethanol, and furfural from the condensate. The use of the vent tank prior to steam stripping cuts the SO_2 to less than 3 kg (6#) per 24 hours. These results then show that this is an effective method of keeping unwanted chemicals off carbon adsorption sites.

Originally plans were made to use this purified condensate back into the pulping system. The presence of carbon fines in the condensate, which would contaminate the pulp, prevented this. The rubbing of the carbon together during regeneration produces fines, and periodically these fines showed up in the stripped condensate.

#1 Fractionator

The vapors from the steam stripper were condensed in the first evaporator effect. This condensate was then sent to the chemical recovery plant and became feed for the #1 fractionator.

The #1 fractionator separates most of the water and acetic acid from the alcohols, furfural and sulfur dioxide (Figure 1). Originally it was planned that this fractionator should remove all of the water. To do this required too much steam. When this fractionator is operating properly, the bottoms contain 0.26% acetic acid with the other chemicals being undetectable. These bottoms are sent through a heat exchanger to help heat the feed to the steam stripper and then to our effluent treatment plant. The overhead from this fractionator contains 27% methanol, 0.65% furfural, 21% ethyl acetate, 21% ethanol, and 2.6% sulfur dioxide. This is used for the feed to #2 fractionator.

All of the fractionators had common problems during start-up. All of the vent condensers from each fractionator discharged into a common header. As each fractionator breathed, vapors from one fractionator would be pushed into or sucked out of the common vent line. This in turn would upset the boiling point of the liquid at the top of another fractionator and cause a violent reaction blowing liquid into as many as three additional fractionators. Then all the fractionators would blow their overhead to the atmosphere. Temporary separate vent lines and finally permanent separate vent lines were installed to each fractionator.

Another problem common to all of these fractionators was that each fractionator was operated by three control loops. The pressure drop through the packing controlled the steam. The temperature near the top of the column controlled the valve which regulated the take off from the overhead of the column. The level in the reboiler controlled the take off from the bottom of the fractionator.

The problem with this type of control was that if too much product was removed from the top of the fractionator, the pressure drop through the column would be reduced and this would call for more steam to be applied to the reboiler. Water vapor develops very little pressure drop through the packing. Alcohol and other more volatile chemical vapors develop a much higher pressure drop. This additional steam would increase the boil-up rate. This in turn would increase the liquid level in the condenser and finally a point would be reached where the liquid would cover the discharge line to the vent condenser. Now pressure would build up in the column and force liquid through the vent condenser into the atmosphere.

The tap at the bottom of the column for sensing the pressure was located directly across from the discharge of the reboiler. This location forced liquid into the pressure tap and gave a false high pressure reading which would close the steam valve and cause the fractionator to drop without the operator being aware of the problem.

During the shutdown from October 1 to October 23, 1976, the following changes were made to correct these problems.

1. The deisgn of the condensers provided for the overhead to be drawn off the bottom of the condenser and the reflux came from the overflow pipe at the side of the condenser. The thermal well was placed below the reflux line and unless product was being drawn off, the temperature at the thermal well did not change. These thermal wells were moved into the reflux line to insure continous temperature reporting for the operators in the control room.

2. Air purges were installed on all of the pressure and level sensors in the fractionators to eliminate false pressure reports due to liquid in the lines.

3. High temperature cutoff controls were installed on the #1, #2, #3, and #5 fractionators to prevent takeoff of overhead once the temperature at the top of the fractionator reached a set point, this insured us of a minimum pressure drop through the packing and prevented the reboiler's steam valve from opening wide open.

The primary cause of the October 1st shutdown was the disruption of the packing in #1 fractionator. The combination of an organic sulfur compound which built up in the packing, coupled with the violent steam surges during the time that the vent lines were tied together, caused the top three rings of packing to unroll. These were sent back to the company for repair and rewinding. To prevent this from happening again, a regular program of boiling this fractionator out with caustic was instituted to remove this organic sulfur build-up. Hold down bars were installed on the top of this fractionator to keep the packing from rising. Steam stripping prior to carbon adsorption appeared to eliminate the organic sulfur buildup in the packing.

#2 Fractionator

This fractionator was designed to separate the ethanol from the methanol coming from the overhead of #1 fractionator (Figure 1). Because of the water and furfural in the feed to this fractionator, a line was installed to send the bottoms of this fractionator to #3 feed tank rather than to the regeneration tank. The bottoms from this fractionator contained about 45.2% ethanol and 1.4% furfural with the remainder water. The overhead from this fractionator contained about 51.9% methanol, 4.9% sulfur dioxide, 40.7% ethyl acetate, and 2.5% methyl acetate. Because of the sulfur dioxide, this product had limited commercial value except as fuel.

Because of the low water content in the feed and the slow feed rate, this fractionator presented no operational problem.

Once it was decided to steam strip prior to carbon adsorption, only furfural, methanol, acetic acid, and water went to #1 fractionator (Figure 2). This fractionator separated the methanol and furfural from the acetic acid and water. No. 2 fractionator then could separate the methanol from the furfural and water. The furfural water mixture at the bottom of #2 fractionator contained over 30% furfural and no alcohol. Once these bottoms were cooled, this permitted us to by-pass #3 and 7 fractionators and go directly to the furfural day tank.

Carbon Regeneration

During the carbon adsorption phase, the condensate flows upwards through the tower. Furfural collects near the bottom of the tower and the acetic acid is distributed throughout the tower. Once acetic acid breaks through the carbon and the condensate flow is sent to the second tower, the loaded tower is ready for regeneration (Figure 4).

Most of the regenerations were accomplished in the following manner. The tower was drained back to the surge tank while adding either vaporized or liquid ethanol to the top of the tower. The ethanol displaces some of the water which had adhered to the carbon and also comes into intimate contact with the acetic acid adsorbed on the carbon. As soon as the condensate is drained from the tower and heat is applied to the carbon in the form of ethanol vapor, the following reaction takes place and ethyl acetate is formed.

$$EtOH + HAc \longrightarrow EtAc + H_2O$$

Some of the ethanol condenses and refluxes at the bottom of the tower. This hot liquid ethanol dissolves and removes the furfural from the bottom of the tower. After 22.7 m^3 (6,000 gal.) of ethanol has been used, the addition of ethanol vapor to the column is stopped and steam is added in an upward flow. This drives off the ethyl acetate and ethanol mixed with varying amounts of water from the top of the tower. These vapors are condensed in the regeneration condenser. This liquid is stored in one of two tanks for further processing.

The #3 storage tank receives all of the liquid removed from the bottom of the carbon tower during regeneration. It also receives any liquid from the regeneration condenser which contains more than 12% water. This tank is also used to collect the bottoms from the #2 fractionator, the underflow from #5 separator, any alcohol removed from #7 fractionator, the condensate from the eductors on #7 fractionator and the bottoms from #10 fractionator (Figure 1).

If the condensed liquid from the regeneration condenser contains less than 12% water, it is sent to the #4 fractionator feed tank.

During the course of regeneration, the products obtained from both the bottom and the top of the tower vary greatly with time. The nearly vertical lines on Figures 5 and 6 show the times when high volumes of chemicals are extracted. The nearly horizontal lines show that very little chemical is extracted. Figure 5 shows a regeneration during which most of the ethyl acetate and furfural were removed from the carbon.

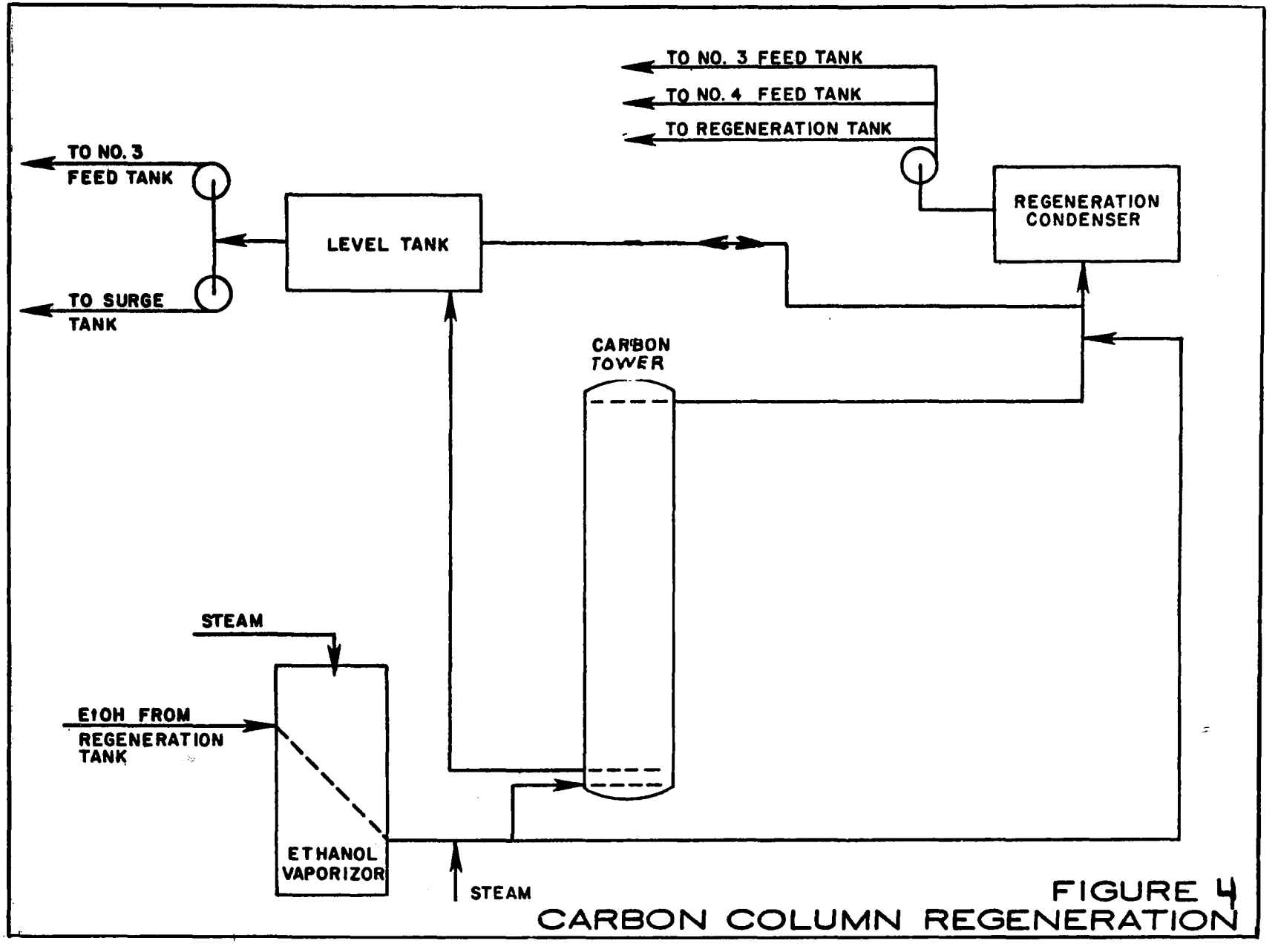

FIGURE 4
CARBON COLUMN REGENERATION

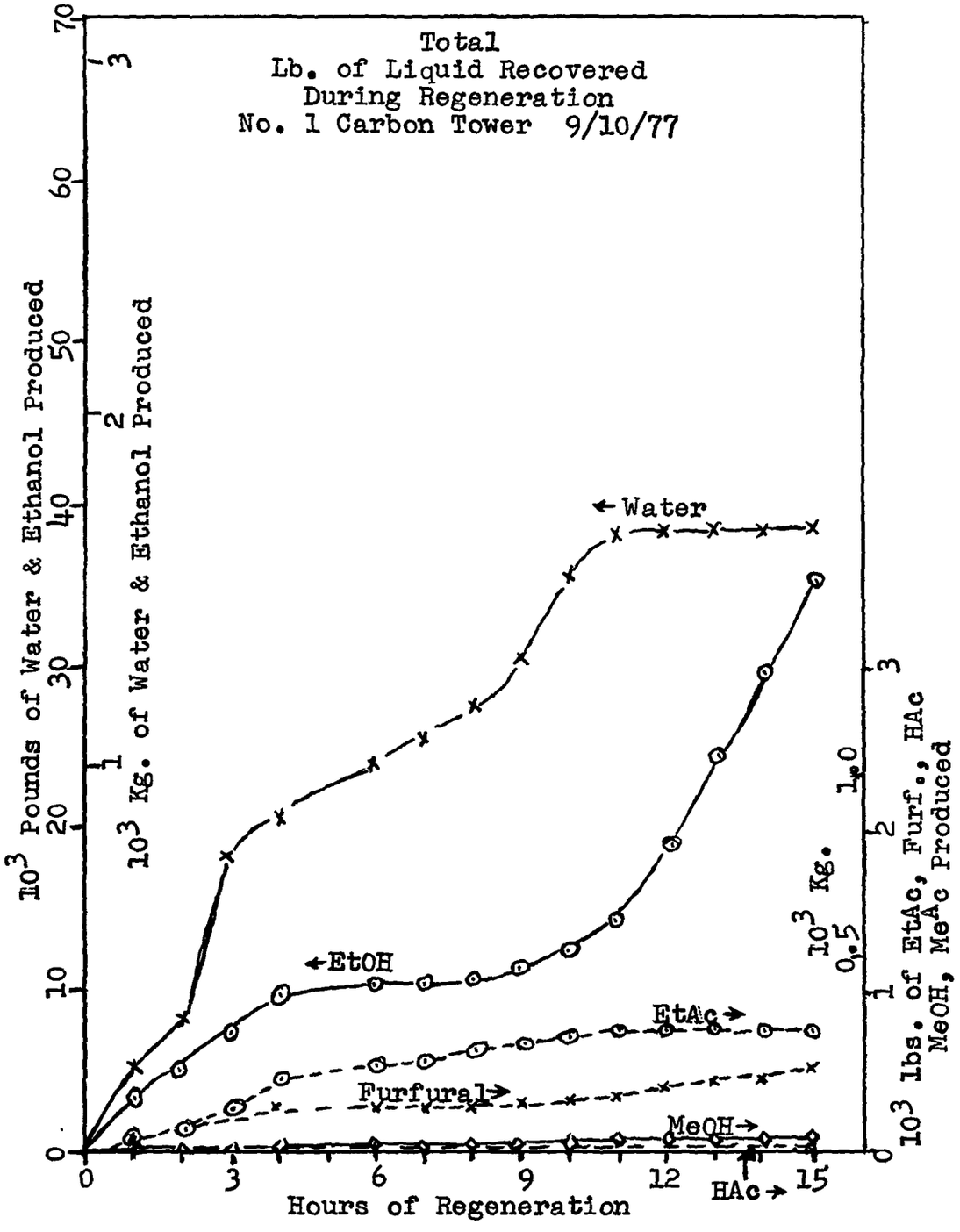

Figure 5 Regeneration Curve 9/10/77

The steep slope of the ethanol line and the nearly horizontal water line shows that the regeneration was stopped before all of the ethanol was purged. Figure 6 shows a regeneration during which most of the ethyl acetate, furfural, and acetic acid was removed from the carbon. The steep slope of the water curve and the nearly horizontal slope of the ethanol curve shows that the regeneration should have been stopped sooner. By extending this regeneration, extra liquid which was mostly water had to be processed by our No. 3 fractionator. This in turn forced us to delay the start of the next regeneration until the excess liquid was processed.

These towers were designed with timers and automatic instruments so that the regeneration could be programmed. In practice this did not work. The draining of the tower created the first problem. A vent line had to be installed between the level tank and the regeneration condenser to keep the level tank from air binding. The valve in this line could not be opened before the liquid level in the carbon tower was below the bottom of the regeneration condenser or this condenser would flood. If this valve was not opened soon enough, then the vacuum in the top of the tower would keep the liquid from being pumped to the surge tank.

The level sensing switches at the top of the carbon towers, which signaled the control room when the tower was full, proved to be inadequate. The balls on the original float switches collapsed under alternate pressure and vacuum. One of the spare vents at the top of each tower were used to install new probe type switches.

The pressure switches which controlled the steam and the ethanol vapor to the tower were not sensitive enough to prevent the blowing of rupture disks in the lines going to the tower when steam or ethanol vapor started flowing into the tower.

From November 1, 1976 through January 12, 1977, the Recovery Plant was shut down for lack of steam. This was the year of the severe natural gas shortage. The federal government prohibited the use of natural gas for electric power generation and this rule was applied to gas turbine generators. The local utility had such a generator with a waste heat boiler which supplied 9.45 kg/s (75,000#/hr.) steam to the Flambeau Paper Co. With this supply cut off, our company suffered a steam shortage which could not be corrected until a package boiler was leased and brought on line on January 12, 1977. During this time, the recovery plant was shut down. Only steam for heating the building and for tracing the liquid lines was used. The carbon towers were drained and steam was bled through them to prevent them from freezing. Oxidation of the sulfur dioxide trapped

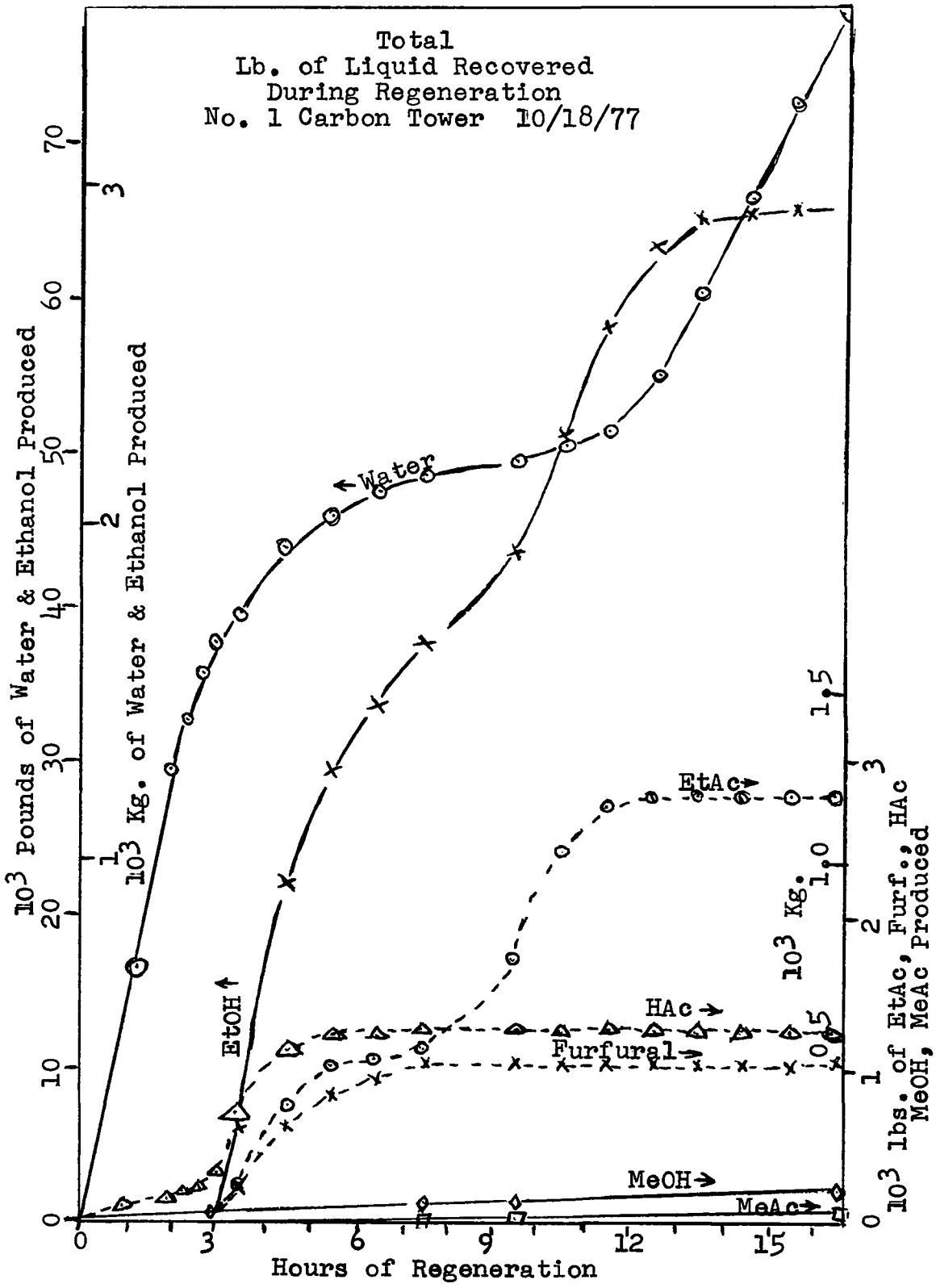

Figure 6. Regeneration Curve 10/18/77

in the carbon formed sulfuric acid which corroded the bottom strainers. When these strainers leaked, carbon filled the feed tanks and plugged up the fractionation columns. The system had to be shut down, the carbon removed from the towers, and the strainers at the bottom of these towers replaced and the towers refilled with carbon. It also necessitated the cleaning of the feed tanks and of #3 and #5 fractionators.

During June of 1977, one of the carbon towers was struck by lightning. The lightning on its way to the ground melted two of the bottom strainers at the base of the tower. As soon as it was discovered that granular carbon was escaping from the bottom of the tower, the tower was shut down and the carbon removed. This time the carbon was sent back for thermal regeneration. To prevent strainer problems in the future, the strainers were replaced with perforated pipes. Graded gravel and sand were placed around and over these pipes to form a base for the carbon. This tower was then filled with new carbon. When the thermally regenerated carbon was available, the other tower was emptied and the bottom strainers were protected with graded gravel and sand before being refilled with the thermally regenerated carbon. These changes solved the internal strainer problem.

Carbon life still remained a problem. To correct this, a major process modification was started in March of 1978. Condensate was stripped prior to carbon adsorption (Figure 2). This removed sulfur dioxide, methanol and furfural from the feed.

Spent sulfite liquor was prevented from reaching the carbon. Sight glasses were installed in the lines leading to the surge tank both at the evaporators and at the recovery plant. As soon as it was discovered, either operator could divert contaminated condensate directly to the effluent treatment system.

These changes prevented further deterioration of the carbon during the next 40 regenerations. It also reduced the amount of alcohol required to leach the furfural and spent liquor from the carbon. The elimination of methanol prevented the formation of methyl acetate and the elimination of sulfur dioxide reduced the organo-sulfur problems we were having in fractionators No. 5,6, and 10.

During the last 10 days that the plant operated, it produced at a consistant rate without an upset. An average of 0.37m (83.5 gal. or 964 lbs.) of ethyl acetate, 226.8 kg (500 lbs.) of 99% furfural and 0.41 m^3 (94 gal.) of methanol were produced each day. A regeneration was completed in twelve hours for the first time.

Since we did not have to remove furfural or spent sulfite liquor from the carbon, the amount of alcohol used during the regeneration was reduced. It is now felt that if a mini-fractionator (Figure 7) were installed between the level tank and the regeneration condenser, some of the alcohol which now goes to the No. 3 feed tank would be fractionated and go to the No. 4 feed tank. This would reduce the concentration of alcohol in the No. 3 fractionator feed, increase the through-put of this fractionator and put us one step closer to our goal of a continous process.

FRACTIONATORS #3 AND #7

The products of regeneration are separated and purified through a series of fractionation steps using five fractionators.

Fractionator #3

Fractionators #3 and #7 are used for removing water and furfural from the regeneration products (Figure 1). The #7 fractionator serves a dual purpose, atmospheric fractionation and vacuum distillation.

The #3 fractionator is fed from the #3 feed tank at a rate between 0.00252 to 0.00757 m^3/s (4 to 12 gpm) depending on the amount of alcohol and acetates contained in the feed. Furfural and water leave with the bottoms. The ethanol, ethyl acetate and methanol are rectified and leave from the top of the column. The furfural and water from the bottom of the column are sent directly to the #7 fractionator as feed. The ethanol, ethyl acetate, methanol and a trace of water are removed from the top of the column and sent to the #4 feed tank for further purification.

The operation of #3 fractionator is very critical. An alcohol layer must be kept just above the furfural layer in the fractionator to force the furfural to the bottom of the column. This is accomplished by limiting the amount of alcohol drawn off the top of the fractionator. If the draw off from the top of this fractionator is too slow, alcohol will work its way into the stripping section of the column, and some alcohol will be discharged to the #7 fractionator. This alcohol will finally end up in the day tank of #7 fractionator and prevent the separation of the 90% furfural crude.

If the draw off from the top of the fractionator is too fast, the furfural will move up the column into the rectification section and be discharged from the top of the column. It will then end up with the recovered ethanol from the bottom of #5

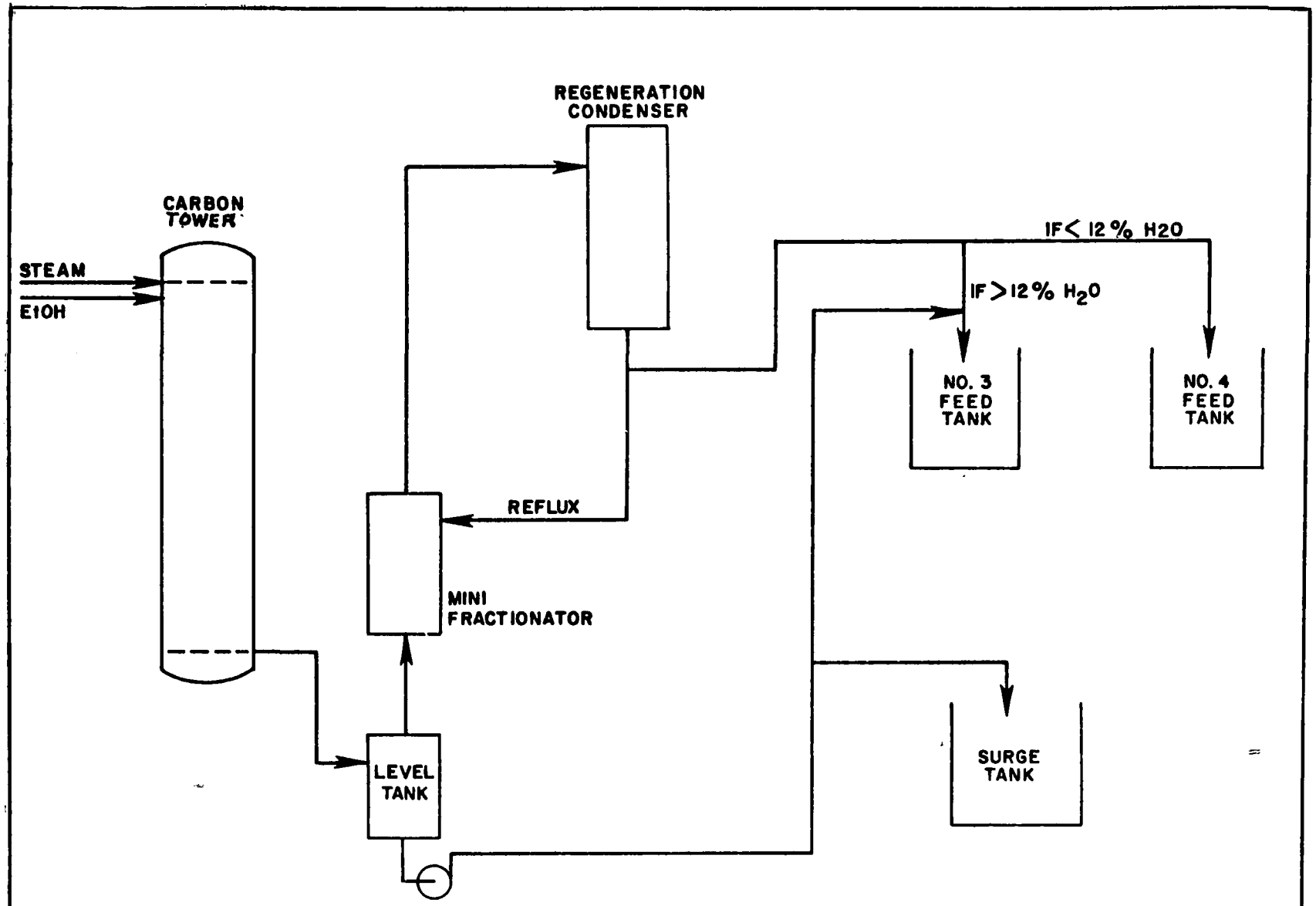

FIGURE 7
MINI-FRACTIONATOR

fractionator and become distributed through the activated carbon during the next regeneration. Furfural takes up acetic acid adsorption sites on the carbon, and if the furfural is near the top of the tower, it is very difficult to remove.

The design of #3 fractionator failed to allow enough theoretical plates in the stripping section of this column to allow the separation of the alcohol from the furfural and water. During the October 1976 shutdown, 1.82 m (6 ft.) of packing was moved from the rectification section to the stripping section of this column by interchanging the 2nd and 3rd sections of this fractionator. This allowed us to operate, but it made the column difficult to handle due to the loss of theoretical plates in the rectification section.

The heat exchanger originally installed between the bottom of #3 fractionator and the feed plate of #7 fractionator was removed due to fouling. The polymerized material from the bottom of #3 fractionator plugged the tubes in this heat exchanger.

The safety outlet valves in #3 and #4 feed tanks had to be replaced because they did not contain 100% stainless steel parts. Wisconsin law required that both the inlet and the discharge pipes from all tanks containing volatile materials must be at the bottom of the tank. This caused short circuiting and improper mixing of the chemicals in #3 and #4 feed tanks. This situation was partially corrected by installing recirculation lines in each of these tanks.

It required 8 to 12 hours to get a satisfactory separation in the #3 fractionator when it is just starting up. Lines were installed to allow off quality products from both the bottom and the top of this fractionator to be recycled back to the #3 feed tank so that during startup this fractionator would not have to be run on total reflux. This allowed for a faster buildup of chemicals in the system and this fractionator could then be brought on line in less than 3 hours.

It was found that the chemical recovery plant did not have a reliable source of cooling water for the condensers. A larger cooling water pump with a pressure reducing valve was installed to correct this problem.

Steam stripping prior to carbon adsorption eliminated furfural from this fractionator (Figure 2). This simplified the operation of this fractionator and allowed the bottoms to be discharged directly to our effluent treatment plant.

Fractionator #7

The #7 fractionator separates the furfural from the water.

Furfural at a concentration of 22% with water forms an azeotrope and boils at about 98°C (208°F) and is removed from the top of the column. This is cooled and sent to the day tank where 90% furfural settles to the bottom and 12% furfural layers on the top. This 12% furfural solution is then returned to the fractionator as reflux. By applying between 0.038 to 0.088 kg/s (300 to 700#/hr.) of steam, the furfural is stripped from the liquid descending the column. About 0.5% furfural and 1.5% acetic acid together with the spent liquor and the polymerized material are discharged in the bottoms. These bottoms are returned to the surge tank so that they would be treated by the carbon towers to recover the furfural and acetic acid before being discharged.

It is necessary to keep air from coming in contact with furfural. Air and furfural heated will polymerize. To prevent plugging of the tubes in the reboiler, a trap was placed before the pump and a strainer was placed in line after the pump to collect this polymerized material. This solved the tube fouling problem.

Another problem with the #7 fractionator was that this polymerized material would plug the packing. Experimentation showed us how to clean this packing easily using chemicals. When the method was perfected, we were able to disassemble, clean the packing and reassemble the column during an 8 hour day.

Steam stripping, prior to carbon adsorption, eliminated the need for using our No. 7 fractionator to concentrate the furfural to 90%. The bottoms from No. 2 fractionator went directly to the furfural day tank where it separated into two layers, one containing 90% furfural and the other 12% furfural. The 12% furfural layer would leave from the top of the day tank and be returned to the No. 1 fractionator for reprocessing (Figure 2). This change, not only saved steam, but also reduced the plant's maintenance problems. It allowed work on No. 7 fractionator without a complete plant shut down. No. 1 and No. 2 fractionators work very well this way and remove 99% of the methanol and furfural fed to them.

FURFURAL PURIFICATION

No. 7 Fractionator Vacuum Distillation

The #7 fractionator was built to operate under either atmospheric or vacuum conditions. This dual use of the same fractionator is covered by U.S. Patent #4071398. A 22% furfural water azeotrope boils at 98°C and will separate on cooling into two layers, one containing 90% furfural, the other 12% furfural.

Vacuum distillation of the 90% furfural produces 99.5% furfural.

When sufficient 90% furfural has been collected from the operating of the #7 fractionator under atmospheric conditions, this fractionator is taken off line and the bottoms of the #3 fractionator are returned to the surge tank where it again goes through the carbon tower and furfural is readsorbed on the carbon. The #7 fractionator is drained and pumped back to the surge tank and the kettle at the bottom of this fractionator is filled with 90% furfural from the furfural day tank (Figure 8). As heat is applied to the liquid in the kettle, a vacuum is drawn on the column to prevent the temperature from exceeding 100°C. Should the furfural go over this temperature, it will start to decompose.

Initially the 22% furfural water azeotrope boils off the 90% furfural in the kettle. As the per cent of water in the kettle decreases, more and more furfural is boiled off with the water and the temperature in the kettle rises. These vapors are condensed and stored in the day tank where they separate back into layers of 90% furfural and 12% furfural. This is saved and used for the next vacuum distillation.

The composition of the overhead from the top of this fractionator is continually sampled and tested. When the water content in the overhead drops to less than 0.5%, the liquid from the condenser is stored in drums as the final product. Distillation is continued until there is only about $0.22m^3$ (50 gal.) of material left in the kettle. At this time the steam is shut off and the contents of the kettle, with its impurities are returned to the spent sulfite liquor feed tanks ahead of the evaporators for reprocessing. Feed from the bottom of the #3 fractionator is again sent to #7 fractionator and the #7 fractionator is again put on atmospheric distillation and the collection of furfural is resumed.

FRACTIONATORS #4, #5, #6, AND #10

These fractionators are used to produce pure ethyl acetate and to recover unreacted ethanol (Figure 2). There is little or no sale for contaminated ethyl acetate. Unreacted ethanol must be recovered and returned to the regeneration tank for reuse.

Discontinued #4 Fractionator

The #4 fractionator was originally designed to remove the methanol from the ethyl acetate-ethanol-water solution. The methanol was supposed to leave from the top of the fractionator while the ethanol, ethyl acetate, and water were to leave from the bottom of this fractionator. The ethyl acetate and the methanol did not separate. Even if we allowed 3 parts of ethyl

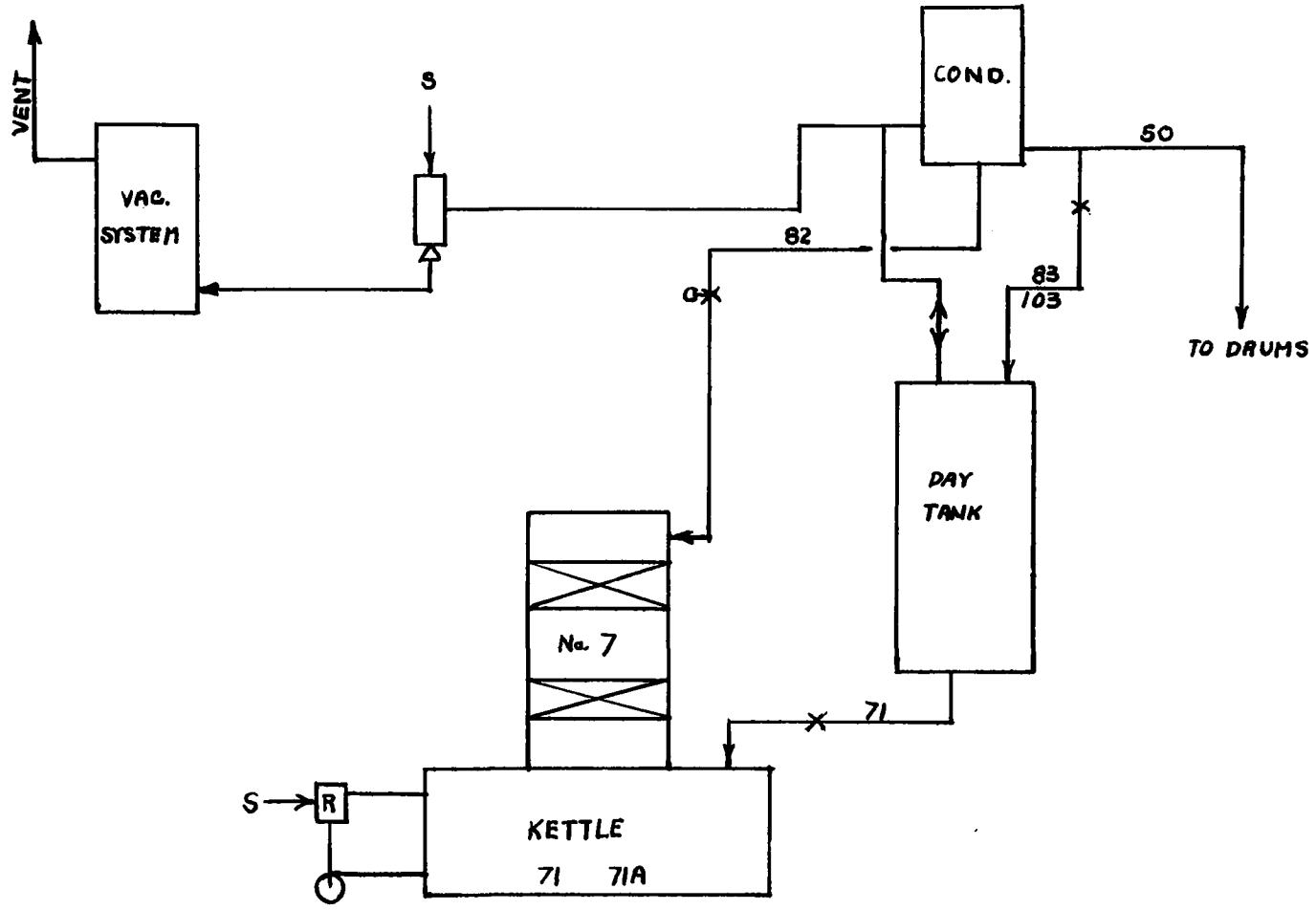

FIGURE 8
PURIFICATION OF CRUDE FURFURAL

acetate to escape with 1 part of methanol, there was still methanol being discharged from the bottom of the column.

Also, there was no logical place to go with the material removed from the top of the fractionator. If it was sent back to #3 feed tank, the methanol in the system would build up. If it was sent to the surge tank or to #1 or to #2 fractionators, the ethyl acetate would contaminate the methanol product. Therefore, the piping was changed and this fractionator was eliminated.

Fractionator #5

The #5 fractionator was designed to separate the ethyl acetate from the ethanol and water. The feed to this fractionator comes from the discharge from the top of #3 fractionator and at certain times from the regeneration condenser. It is important to keep this feed at less than 12% water. If there is too much water in the feed, it will dilute the ethanol at the bottom of the fractionator and thus dilute the ethanol going to the regeneration tank.

The maximum feed rate was never established because the #3 fractionator limited the rate of feed to this fractionator. The usual feed rate to this column was between 0.000126 to 0.000252 m^3/s (2 to 4 gpm). The ethyl acetate-ethanol-water azeotrope together with the methanol and any sulfur dioxide worked its way through the rectification section of this fractionator and was sent to the ethyl acetate separator. The remaining ethanol and water dropped through the stripping section, was cooled, and then sent to the regeneration tank to be used for the next chemical regeneration.

This fractionator worked very well once separation was obtained. For this reason, we try to never shut this fractionator down.

Ethyl Acetate Separator

The condensed liquid from the top of #5 and from the top of #6 fractionator are combined and water is added to this at the rate of 0.0000126 m^3/s (0.2 gpm). Then it is cooled and sent to the ethyl acetate separator where the ethyl acetate separates from the wash water. The washing of the ethyl acetate with water removes the ethanol and methanol and purifies the product. The ethyl acetate from the top of the separator becomes the feed for the #6 fractionator while the bottoms are recycled.

At first the liquid from the bottom of the separator was returned to the #3 feed tank. With the #4 fractionator removed

from the system there was no way for the methanol to escape. A new line was installed so that these bottoms could be sent to the feed of the #1 fractionator. It was hoped that with the large amount of water in #1 fractionator that the ethyl acetate would break down and revert back to acetic acid and ethanol. This did not happen and the methanol was further contaminated. In order to salvage some of this ethyl acetate, the bottoms of the ethyl acetate separator were sent to the #3 feed tank so long as the methanol concentration was no greater than 8%. Once the methanol concentration rose above 8%, the bottoms had to be sent to the #1 fractionator feed.

Steam stripping, prior to carbon adsorption, eliminated the need for our #4 fractionator. We no longer had to contend with sulfur dioxide and methanol in the feed to our #5 fractionator. This in turn eliminated the sulfur dioxide and methanol from the ethyl acetate separator. It had been found that if the sulfur dioxide content in this separator became too high, the two phases in the separator would invert and water would enter #6 fractionator. Once this happened, it would take several days before we could eliminate the water from that fractionator and start producing 99+% ethyl acetate again. The elimination of methanol from these streams allowed us to return the water phase from the bottom of this unit to the #3 feed tank. This in turn eliminated the ethyl acetate from the #1 and 2 fractionators and the methanol product.

#6 Fractionator

The #6 fractionator was designed as the final step in the purification of ethyl acetate. The small amount of water and ethanol in the feed to #6 fractionator formed an azeotrope with ethyl acetate which lowered the boiling point to below that of pure ethyl acetate. This allowed the water and ethanol to be removed from the top of this column. This overhead was then returned to the ethyl acetate separator. Pure ethyl acetate from the bottom of this column was to be stored in the ethyl acetate storage tank.

#10 Fractionator

During this process, yellowish organic sulfur compounds formed and remained with the ethyl acetate. To remove the yellow color, the No. 4 fractionator was used after the No. 6 fractionator and renamed No. 10 (Figure 2).

This column produced colorless 99.5% ethyl acetate at the top and the yellow color which collected at the bottom was pumped back to the no. 3 feed tank about once every 24 hours. It is estimated that 0.057 m^3 (15 gal.) of ethyl acetate was recycled each time the bottoms of the No. 10 fractionator was

pumped out. It has been noted that since we started steam stripping prior to carbon adsorption, that the color in the ethyl acetate is gradually disappearing. If this trend continues, it could mean that this fractionator might not be needed for this purpose.

Material Balances

Material balances showing the operation of the steam stripper and the fractionators can be found in Appendix A. These tables show average values only. The concentration of the various streams are continually changing through the regeneration cycle.

SECTION 5

ECONOMIC EVALUATION

Being a first generation plant, engineering, consulting and construction costs were high. Many items included in the original design, were later found unnecessary. Engineering and consulting services for this project were $591,324. Construction costs were $2,537,978.

Near the end of the project, a 10 day trial was conducted. Caustic cleaned carbon was the only carbon available to us for this trial. Laboratory tests showed that it would adsorb only 9.7% as much acetic acid as would new Witco Carbon, and only 13.5% as much acetic acid as thermally regenerated carbon.

TABLE 3. OPERATING DATA, 10-DAY TRIAL

Stream/ Compound	Gal./ Day	m^3/ Day	Lbs./ Day	kg/ Day	% Theoretical Recovery 1974
Imput	230,000	870.642			
Output, Salable					
Sulfur Dioxide			1,770	804.5	72.3
Methanol	94	0.34	620	281.18	21.7
Furfural			500	226.76	32.1
Ethyl Acetate	126	0.45	964	929.02	4.8

The economic analysis of this run was based on the following process. One kg (2.205 lb.) of ethyl acetate requires 0.52 kg (1.147 lb.) of ethyl alcohol and 0.68 kg (1.50 lb.) of acetic acid. Ethyl alcohol costs about $0.375/kg ($0.17/lb.), and the price for ethyl acetate delivered is $0.507/kg ($.23/lb.) minus $0.088/kg ($0.04/lb.) for transportation and commission, giving a net price of $0.419/kg ($0.19/lb.). Only fuel value can be give to the methanol, as what was produced was contaminated with sulfur dioxide and could not be sold. The sale prices of the products produced each day were:

429.02 kg Ethyl Acetate x $0.419/kg	$179.76/Day
226.76 kg Furfural x $1.19/kg	270.00/Day
281.18 kg Methanol x $0.044/kg	12.51/Day
804.50 kg Sulfur Dioxide x $0.023/kg	18.50/Day
TOTAL SALE PRICE	$480.77/Day

Operation Cost of the plant was:

Steam	$576.00/Day
Labor	300.00/Day
Maintenance	48.00/Day
Ethanol	84.00/Day
TOTAL COST OF OPERATION	$1,008.00/Day

This operation removed 2.544 kg/day (5,610 lbs./day) of BOD_5. The net operating cost was $527.23/day or 9.4¢/lb. of BOD removed.

Further modifications of the process shown in Figure 2 include addition of the Mini-Fractionator shown in Figure 4. The Mini-Fractionator is designed to fractionate the regeneration products so that more product with less than 12 percent water is produced, reducing the bottlenecking effect of Fractionator No. 3. If 100 percent removal of methanol, acetic acid, and furfural could be obtained with new carbon, then the following economic balance would apply:

Methanol at a concentration of 0.071%	618.16 kg/Day
Acetic acid at a concentration of 0.894	7,783.54 kg/day
Ethyl Acetate (7.783.54 x 1.467)	11,418.45 kg/Day
Furfural at a concentration of 0.067%	583.33 kg/day
Ethyl acetate (11,418.45 x $0.419)	$ 4,784.33/Day
Furfural (583.33 x $1.19)	694.16/Day
Methanol for fuel (618.16 x $0.066)	40.80/Day
TOTAL SALE PRICE	5,519.29/Day*

Operating cost for this plant would be:

Steam	576.00/Day
Labor	300.00/Day
Maintenance	48.00/Day
Ethanol	2,210.00/Day
TOTAL COST OF OPERATION	$ 3,134.00/Day

This would allow the plant to net $2,385.29 per day while reducing the BOD_5 load to the treatment plant by 7709.75 kg (18,000 lb.) per day.

*Income from the sale of SO_2 is not included since some of the SO_2 would be used in water to wash the scale out of the evaporator so that none of the organic chemicals would bypass the recovery equipment.

SECTION 6

ANALYTICAL PROCEDURES

The Hewlett Packard 5830A gas chromatograph was fitted with dual thermal conductivity detectors fitted with two 12 foot by 1/8 inch diameter stainless steel columns which were used to determine the percent by weight of methyl acetate, methanol, ethanol, ethyl acetate, acetic acid, and furfural in the samples. These columns were packed with 5% carbowax 20M on 30/60 mesh Chromosorb T. Samples were tested using the following program: The initial temperature of 80°C was held for 5 minutes. Then the temperature increased at the rate of 30°C per minute until 180°C was reached. This temperature was held for 5 minutes to complete the test. The injection temperature was 190°C, the detector temperature was 230°C, the attenuation was 9, the helium carrier flow was 11 ml/min. and the injection size was 0.3 microliter. Using this method, 3 samples per hour could be tested.

The gas chromatograph was standardized using different concentrations of the pure chemicals and the factors were incorporated into the computer program of the gas chromatograph so that the results were directly printed out by the chromatograph. The operator had to inject the sample and edit the proper times when the chemicals came out into the computer. If he was uncertain about the chemical composition of a peak, he would spike the sample with a known amount of the suspected chemical and rerun the sample. If the suspected peak increased in size, then he knew that he had the right chemical.

Sulfur dioxide was determined by titration with standard potassium iodate to a blue starch end point.

In special cases, where it was known that only acetic acid was present, the concentration was determined by titration with a standard sodium hydroxide solution. This was done because acetic acid had the tendency to hang up in the column of the gas chromatograph and several successive samples had to be tested to insure a correct reading. This method also relieved the load on the gas chromatograph and allowed it to be used for testing other samples.

REFERENCES

1. Baierl, Kenneth W., et al, "Treatment of Sulfite Evaporator Condensate for Recovery of Volatile Components," prepared for the U.S. Environmental Protection Agency, Office of Research and Development, EPA Grant No. S801207, November 1973. EPA-660/2-73-030

2. Baierl, Kenneth W., U.S. Patent No. 4,002,525, Chemical Recovery from Waste Liquors Utilizing Indirect Heat Exchangers in Multi-Stage Evaporation Plus Contact Steam Stripping," assigned to Flambeau Paper Company, January 11, 1977.

3. Baierl, Kenneth W., U.S. Patent No. 4,016,180, "Chemical Concentration by Adsorption," assigned to Flambeau Paper Company April 5, 1977.

4. Baierl, Kenneth W., U.S. Patent No. 4,071,398,"Chemical Concentration by Sequential Activated Carbon Adsorption and Fractionation," assigned to Flambeau Paper Company, January 31, 1978.

5. U.S. Environmental Protection Agency, "Determination of Rights: Grantee-Reported Inventions," EPA Grant No. S803,301-01-02, Flambeau Paper Company, November 4, 1977.

APPENDIX A

STEAM STRIPPING TABLES

These tables show the average feed to and the percent removal by the steam stripper for BOD_5 and certain chemicals during the month of December 1977.

TABLE 1A. FEED TO STEAM STRIPPER

SENT TO STEAM STRIPPER IN 24 HOURS

DATE Dec. 1977	BOD		MeAc		MeOH		EtOH		HAc		Furf.		SO_2	
	kg	#	kg	#	kg	#	kg	#	kg	#	kg	#	kg	#
9	7709	16996	0	0	723	1594	0	0	4470	9855	701	1546	34	76
10	6587	14543	0	0	415	915	181	398	4657	10268	420	926	9	19
12	6221	13715	0	0	730	1610	1433	3160	4529	9984	497	1096	15	33
13	10316	22743	0	0	525	1158	318	700	4666	10287	335	739	11	25
14	6930	15277	0	0	741	1633	220	484	5168	11394	410	904	5	10
16	7908	17436	0	0	595	1311	0	0	4050	8929	393	866	11	25
17	7995	17626	49	108	642	1415	446	983	4590	10129	337	743	28	62
19	7575	16700	0	0	585	1510	0	0	4186	9229	528	1163	14	30
20	6277	13838	0	0	398	1097	300	661	4185	9226	181	399	9	20
21	8453	18635	0	0	885	1950	0	0	4063	8957	591	1304	11	25
22	7948	19728	63	139	510	1125	694	1530	4330	9547	195	430	32	71
AVE.	7721	17021	10	22	631	1392	327	720	4445	9800	417	920	16	36

TABLE 2A. % REMOVAL BY STEAM STRIPPER

	% REMOVAL BY STEAM STRIPPER						
DATE	BOD	MeAc	MeOH	EtOH	HAc	Furf.	SO_2
Dec. 1977 9	41.7	100	85.2	100	23.1	100	100
10	47.2	100	100	100	35.3	100	50
12	30.3	100	100	100	31.3	100	71.4
13	55.1	100	100	100	20.8	100	80.0
14	35.0	100	100	100	32.0	100	50.0
16	49.8	100	100	100	44.7	100	80.0
17	42.0	100	100	100	66.9	100	84.6
19	38.7	100	100	100	55.1	100	83.7
20	25.4	100	100	100	42.8	100	75.0
21	49.6	100	100	100	72.0	100	80.0
22	40.8	100	100	100	51.5	100	92.9
AVE.	40.2	100	98.8	100	42.4	100	84.1

APPENDIX B.

HEAT AND MATERIAL BALANCES AROUND THE FRACTIONATORS

The following tables show heat and material balances around the major pieces of operating equipment and storage tanks used in this process. Each stream is cross reference by block flow-sheet No. to figures 1, 2, and 5 of this report.

TABLE 1B HEAT AND MATERIAL BALANCE FOR STEAM STRIPPER

BLOCK FLOWSHEET NO.		19		24		21	
See Fig. 1		Btms fm. stripper		btms fm.#1 frac.		Disch. to T.P.	
		DESIGN	OPER.	DESIGN	OPER.	DESIGN	OPER.
FLOW RATE	kg/s	12.4	7.12	2.96	2.08	15.4	9.2
	#/hr	98,702	56,500	23,500	16,496	122,202	72,996
COMPONENTS							
METHANOL	kg/s						
	#/hr						
FURFURAL	kg/s						
	#/hr						
ACETIC	kg/s		0.0113		0.008		0.0161
ACID	#/hr		90		38		128
SULFUR	kg/s						
DIOXIDE	#/hr						
ETHANOL	kg/s						
	#/hr						
ETHYL	kg/s						
ACETATE	#/hr						
METHYL	kg/s						
ACETATE	#/hr						
WATER	kg/s	12.4	7.11	2.96	2.07	15.4	9.18
	#/hr	98,702	56,410	23,500	16,458	122,202	72,868
PROPERTIES							
TEMP.	°C	129	129	100	100	69.4	69.4
	°F	265	265	212	212	157	157
PRESS	kPa	268.9	268.9	586	138	227	227
	psig	39	39	85	0.2	33	33
SPECIFIC GRAVITY		0.935		0.958		0.977	
SPECIFIC HEAT		1.010		1.007		1.004	
VISCOSITY cps		0.17		0.26		0.42	
HEAT QUANTITIES							
	kJ/kg	544		418		291	
	btu/#	234		180		125	

Continued

TABLE 1B (CONTINUED)

BLOCK FLOWSHEET NO.		20		15		16		17	
(See Fig. 1)		Steam		Feed to heat exc.		Feed fm. heat ex.		overhead fm. stp	
		DESIGN	OPER.	DESIGN	OPER.	DESIGN	OPER.	DESIGN	OPER.
FLOW RATE	kg/s	3.15	2.27	12.3	6.93	12.3	6.93	2.98	2.08
	#/hr	25,000	18,000	97,323	55,000	97,323	55,000	23,621	16,500
COMPONENTS									
METHANOL	kg/s			0.015	0.005	0.015	0.005	0.015	0.005
	#/hr			120	38	120	38	120	38
FURFURAL	kg/s				0.0001		0.0001		0.0001
	#/hr				1		1		1
ACETIC	kg/s				0.018		0.018		0.005
ACID	#/hr				139		139		38
SULFUR	kg/s				0.0005		0.0005		0.0005
DIOXIDE	#/hr				4		4		4
ETHANOL	kg/s			0.030	0.005	0.030	0.005	0.030	0.004
	#/hr			240	43	240	43	240	28
ETHYL	kg/s								
ACETATE	#/hr								20
METHYL	kg/s				0.0001		0.0001		0.0001
ACETATE	#/h4				1		1		1
WATER	kg/s	3.15	2.27	12.25	6.90	12.25	6.90	2.96	2.06
	#/hr	25,000	18,000	97,203	54,774	97,203	54,774	23,501	16,370
PROPERTIES									
TEMP.	°C	134	134	54	54	121	121	121	127
	°F	274	274	130	130	250	250	250	260
PRESS	kPa	207	207	269	269	159	172	159	193
	psig	30	30	39	39	23	25	23	28
SPECIFIC GRAVITY		0.092	0.092	0.986		0.942		0.072	
SPECIFIC HEAT		0.46	0.46	1.000		1.010		0.460	
VISCOSITY cps		0.0135	0.0135	0.55		0.20		0.013	
HEAT QUANTITIES									
	kJ/kg	2726		228		507		2708	
	btu/#	1172		98		218		1164	

TABLE 2B HEAT AND MATERIAL BALANCE FOR #1 FRACTIONATOR

BLOCK FLOWSHEET NO.		18		41		24		23	
See Fig. 1		Feed fm. strpr.		Feed fm. #5 sep.		Bottoms #1 frac.		Ovrhd. #1 Frac.	
		DESIGN	OPER.	DESIGN	OPER.	DESIGN	OPER.	DESIGN	OPER.
FLOW RATE	kg/s	2.98	2.08	0.085	0.019	2.96	2.08	0.015	0.019
	#/hr	23,621	16,500	677	150	23,500	16,496	121	154
COMPONENTS									
METHANOL	kg/s	0.015	0.005	0.0005	0.0005			0.015	0.0053
	#/hr	120	38	4	4			120	42
FURFURAL	kg/s		0.0001						0.0001
	#/hr		1						1
ACETIC	kg/s		0.0048				0.0048		
ACID	#/hr		38				38		
SULFUR	kg/s		0.0005						0.0005
DIOXIDE	#/h4		4						4
ETHANOL	kg/s	0.030	0.0035	0.013	0.0006			0.030	0.0042
	#/hr	240	28	100	5			240	33
ETHYL	kg/s		0.0025	0.0089	0.0016				0.0042
ACETATE	#/hr		20	71	13				33
METHYL	kg/s		0.0001		0.0001				0.0003
ACETATE	#/hr		1		1				2
WATER	kg/s	2.962	2.063	0.063	0.016	2.961	2.074	0.0001	0.0049
	#/hr	23,501	16,370	502	127	23,500	16,458	1	39
PROPERTIES									
TEMP.	°C	116	25	40	25	100	100	44	25
	°F	240	77	104	77	212	212	111	77
PRESS	kPa	69	0	7		586	1	7	0
	psig	10	0	1		85	0.2	1.0	0
SPECIFIC GRAVITY		0.948		0.958		0.958		0.760	
SPECIFIC HEAT		1.011		0.894		1.007		0.62	
VISCOSITY cps		0.20		0.688		0.26		0.45	
HEAT QUANTITIES									
	kJ/kg	484		149		419		114	
	btu/#	208		64		180		49	

TABLE 3B HEAT AND MATERIAL BALANCE FOR #2 FRACTIONATOR

BLOCK FLOWSHEET NO.		23		25		26	
See Fig. 1		Feed to #2 Frac.		Btms.fm.#2 frac.		Ovrhd.fm.#2 Frac.	
		DESIGN	OPER.	DESIGN	OPER.	DESIGN	OPER.
FLOW RATE	kg/s	0.015	0.019	0.0001	0.0092	0.015	0.0102
	#/hr	121	154	1	73	120	81
COMPONENTS							
METHANOL	kg/s	0.015	0.0053			0.015	0.0053
	#/hr	120	42			120	42
FURFURAL	kg/s		0.001		0.001		
	#/hr		1		1		
ACETIC	kg/s						
ACID	#/hr						
SULFUR	kg/s		0.0005				0.0005
DIOXIDE	#/hr		4				4
ETHANOL	kg/s	0.030	0.0042	0.030	0.0042		
	#/hr	240	33	240	33		
ETHYL	kg/s		0.0042				0.0042
ACETATE	#/hr		33				33
METHYL	kg/s		0.0003				0.0003
ACETATE	#/hr		2				2
WATER	kg/s	0.0001	0.0049	0.0001	0.0049		
	#/hr	1	39	1	39		
PROPERTIES							
TEMP.	°C	44	25	100	81	44	60
	°F	111	77	212	178	111	140
PRESS	kPa	7	0	152	2	7	0
	psig	1.0	0	22	0.3	1.0	0
SPECIFIC GRAVITY		0.760		0.958		0.760	
SPECIFIC HEAT		0.62		1.007		0.62	
VISCOSITY cps		0.45		0.26		0.45	
HEAT QUANTITIES							
	kJ/kg	114		419		114	
	btu/#	49		180		49	

TABLE 4B HEAT AND MATERIAL BALANCE FOR #3 FRACTIONATOR FEED TANK

BLOCK FLOWSHEET NO.		25		31 Intermittent		32 Intermittent		41	
See Fig. 1		Btm. #2 Fract.		FmReg.Level Tank		Fm.Regen. Cond.		Btm.#5 Separator	
		DESIGN	OPER.	DESIGN	OPER.	DESIGN	OPER.	DESIGN	OPER.
FLOW RATE	kg/s	0.0001	0.0092	0.563	0.040	0.272	0.455	0.085	0.019
	#/hr	1	73	4470	314	2158	3613	677	150
COMPONENTS									
METHANOL	kg/s			0.0005			0.0008	0.0005	0.0005
	#/hr			4			6	4	4
FURFURAL	kg/s		0.0001	0.0087	0.0006		0.0063		
	#/hr		1	69	5		50		
ACETIC	kg/s				0.0004		0.0039		
ACID	#/hr				3		31		
SULFUR	kg/s								
DIOXIDE	#/hr								
ETHANOL	kg/s		0.0042	0.073	0.0101	0.147	0.116	0.0125	0.0006
	#/hr		33	583	80	1168	92	100	5
ETHYL	kg/s				0.0005	0.109	0.0053	0.0089	0.0016
ACETATE	#/hr				4	862	42	71	13
METHYL	kg/s						0.0001		0.0001
ACETATE	#/hr						1		1
WATER	kg/s	0.0001	0.0049	0.472	0.028	0.016	0.322	0.063	0.016
	#/hr	1	39	3748	222	128	2558	502	127
PROPERTIES									
TEMP.	°C	100	81	60	102	38	40	40	25
	°F	212	178	140	215	100	104	104	77
PRESS	kPa	152	2	117		76		7	
	psig	22	0.3	17		11		1	
SPECIFIC GRAVITY		0.958		0.983		0.846		0.958	
SPECIFIC HEAT		1.007		1.006		0.610		0.894	
VISCOSITY cps		0.26		0.49		0.744		0.688	
HEAT QUANTITIES									
	KJ/kg	419		251		95		149	
	btu/#	180		108		41		64	

TABLE 4B (CONTINUED)

BLOCK FLOWSHEET NO. See Fig. 1		75 Intermittent Fm. Educt. Cond.		102 Intermittent EtOH Fm.#7 Frac.		101 Intermittent Fm.Bot. #10 Frac		33 Fm. #3 Feed T.	
		DESIGN	OPER.	DESIGN	OPER	DESIGN	OPER.	DESIGN	OPER.
FLOW RATE	kg/s	0.0079						0.648	0.504
	#/hr	63						5139	4000
COMPONENTS									
METHANOL	kg/s							0.0005	0.0008
	#/hr							4	6
FURFURAL	kg/s	0.0024						0.0087	0.0071
	#/hr	19						69	56
ACETIC	kg/s		Not Enough Data	Not Enough Data	Not Enough Data	Not Enough Data	Not Enough Data		0.0043
ACID	#/hr								34
SULFUR	kg/s								
DIOXIDE	#/hr								
ETHANOL	kg/s							0.068	0.131
	#/hr							683	1038
ETHYL	kg/s							0.0084	0.0058
ACETATE	#/hr							67	46
METHYL	kg/s								0.0001
ACETATE	#/hr								1
WATER	kg/s	0.0055						0.535	0.355
	#/hr	44						4247	2819
PROPERTIES									
TEMP.	°C	21					81	60	
	°F	70					178	140	
PRESS	kPa	152					3	179	
	psig	22					0.4	26	
SPECIFIC GRAVITY		1.05						0.983	
SPECIFIC HEAT		0.825						1.006	
VISCOSITY cps		0.47						0.49	
HEAT QUANTITIES									
	kJ/kg	72						251	
	btu/#	31						108	

TABLE 5B HEAT AND MATERIAL BALANCE FOR #3 FRACTIONATOR

BLOCK FLOWSHEET NO.		33		35A *		35B *		34	
See Fig. 1		Fm.#3Frac.Stg.T.		Btms#3to#7Fract.		Btms. to Surge T		Ovrhd to#4 StgT.	
		DESIGN	OPER.	DESIGN	OPER.	DESIGN	OPER.	DESIGN	OPER.
FLOW RATE	kg/s	0.648	0.504	0.548	0.288	0.548	0.065	0.099	0.151
	#/hr	5139	4000	4350	2286	4350	514	789	1200
COMPONENTS									
METHANOL	kg/s	0.0005	0.0008					0.0005	0.0008
	#/hr	4	6					4	6
FURFURAL	kg/s	0.0087	0.0071	0.0087	0.0057	0.0087	0.0014		
	#/hr	69	56	69	45	69	11		
ACETIC	kg/s		0.0043		0.0035		0.0008		
ACID	#/hr		34		28		6		
SULFUR	kg/s								
DIOXIDE	#/hr								
ETHANOL	kg/s	0.086	0.131		0.0004			0.086	0.130
	#/hr	683	1038		3			685	1035
ETHYL	kg/s	0.0084	0.0058					0.0084	0.0058
ACETATE	#/hr	67	46					67	46
METHYL	kg/s		0.0001						0.0001
ACETATE	#/hr		1						1
WATER	kg/s	0.535	0.355	0.531	0.278	0.531	0.063	0.0044	0.0141
	#/hr	4247	2819	4212	2210	4212	497	35	112
PROPERTIES									
TEMP.	°C	60	54	102	100	102	100	49	39
	°F	140	130	215	212	215	212	120	102
PRESS	kPa	179		172		172		7	0
	psig	26		25		25		1	0
SPECIFIC GRAVITY		0.983		0.956		0.956		0.808	
SPECIFIC HEAT		1.006		1.008		1.008		0.730	
VISCOSITY		0.49		0.25		0.25		0.760	
HEAT QUANTITIES									
	kJ/kg	251		428		428		149	
	btu/#	108		184		184		64	

*18% of the time bottoms go to surge tank.

TABLE 6B HEAT AND MATERIAL BALANCE FOR #7 FRACTIONATOR

BLOCK FLOWSHEET NO.		35A		47		49		71	
See Fig. 1		#7 Frac. Feed		Ovrhd.fm.#7 frac.		Reflux fm.day tk		90% Crude furf.	
		DESIGN	OPER.	DESIGN	OPER.	DESIGN	OPER.	DESIGN	OPER.
FLOW RATE	kg/s	0.548	0.288	0.058	0.019	0.049	0.014	0.0045	0.0045
	#/hr	4.350	2.286	458	151	385	115	36	36
COMPONENTS									
METHANOL	kg/s								
	#/hr								
FURFURAL	kg/s	0.0087	0.0057	0.0130	0.0052	0.0043	0.0010	0.0042	0.0042
	#/hr	69	45	103	41	34	8	33	33
ACETIC	kg/s		0.0035						
ACID	#/hr		28						
SULFUR	kg/s								
DIOXIDE	#/hr								
ETHANOL	kg/s		0.0004		0.0018		0.0016		0.0001
	#/hr		3		14		13		1
ETHYL ACE	kg/s								
ACETATE	#/hr								
METHYL	kg/s								
ACETATE	#/hr								
WATER	kg/s	0.531	0.278	0.045	0.012	0.044	0.0118	0.0004	0.0003
	#/hr	4212	2210	355	96	351	94	3	2
PROPERTIES									
TEMP.	°C	102	100	40	39	40	39	21	21
	°F	215	212	104	102	104	102	70	70
PRESS	kPa	172		7		7			-
	psig	25		1		1			
SPECIFIC GRAVITY		0.956		1.036		1.014			
SPECIFIC HEAT		1.008		0.867		0.948			
VISCOSITY	cps	0.25							
HEAT QUANTITIES									
	kJ/kg	428		147		158			
	btu/#	184		63		68			

TABLE 6B (CONTINUED)

BLOCK FLOWSHEET NO.		46	
See Fig. 1		Btms.fm.#7 Frac.	
		DESIGN	OPER.
FLOW RATE	kg/s	0.539	0.283
	#/hr	4281	2250
COMPONENTS			
METHANOL	kg/s		
	#/hr		
FURFURAL	kg/s		0.0015
	#/hr		12
ACETIC	kg/s		0.0035
ACID	#/hr		28
SULFUR	kg/s		
DIOXIDE	#/hr		
ETHANOL	kg/s		0.0003
	#/hr		2
ETHYL	kg/s		
ACETATE	#/hr		
METHYL	kg/s		
ACETATE	#/hr		
WATER	kg/s	0.531	0.278
	#/hr	4216	2208
PROPERTIES			
TEMP.	°C	100	100
	°F	212	212
PRESS	kPa	124	1
	psig	18	0.2
SPECIFIC GRAVITY		0.852	
SPECIFIC HEAT		1.008	
VISCOSITY cps		0.262	
HEAT QUANTITIES			
	kJ/kg	421	
	btu/#	181	

TABLE 7B
HEAT AND MATERIAL BALANCE FOR #7 FRACT. 92 TO 98% FURFURAL PURITY

BLOCK FLOWSHEET NO.		71		82		83	
See Fig. 5		Crude Furfural		Reflux		To Day Tank	
		DESIGN	OPER.	DESIGN	OPER.	DESIGN	OPER
FLOW RATE	kg/s	.0045	.0045				
	#/hr	36	36				
COMPONENTS							
METHANOL	kg/s	0.0042	0.0042				
	#/hr	33	33	90-98%	90-98%		
FURFURAL	kg/s						
	#/hr						
ACETIC	kg/s						
ACID	#/hr						
SULFUR	kg/s						
DIOXIDE	#/hr						
ETHANOL	kg/s		.0001				
	#/hr		1				
ETHYL	kg/s						
ACETATE	#/hr						
METHYL	kg/s						
ACETATE	#/hr						
WATER	kg/s	.0004	.0003				
	#/hr	3	2				
PROPERTIES							
TEMP.	°C	21	21				
	°F	70	70				
PRESS	kPa						
	psig						
SPECIFIC GRAVITY							
SPECIFIC HEAT							
VISCOSITY cps							
HEAT QUANTITIES							
	kJ/kg						
	btu/#						

TABLE 9B HEAT AND MATERIAL BALANCE FOR #4 FEED TANK

BLOCK FLOWSHEET NO.		34		104		36	
See Fig. 2		Ovhd.fm.#3 Frac.		Ovhd.fm.#10Frac.		To #5 Frac. Feed	
		DESIGN	OPER.	DESIGN	OPER.	DESIGN	OPER.
FLOW RATE	kg/s	0.099	0.151	0.108	0.0038	0.371	0.151
	#/hr	789	1200	858	30	2947	1200
COMPONENTS							
METHANOL	kg/s	0.0005	0.0008			0.0005	0.0008
	#/hr	4	6			4	6
FURFURAL	kg/s						
	#/hr						
ACETIC	kg/s						
ACID	#/hr						
SULFUR	kg/s						
DIOXIDE	#/hr						
ETHANOL	kg/s	0.086	0.130			0.233	0.130
	#/hr	683	1035			1851	1035
ETHYL	kg/s	0.0084	0.0058	0.108	0.0038	0.117	0.0058
ACETATE	#/hr	67	46	858	30	929	46
METHYL	kg/s		0.0001				0.0001
ACETATE	#/hr		1				1
WATER	kg/s	0.0044	0.014			0.021	0.014
	#/hr	35	112			163	112
PROPERTIES							
TEMP.	°C	49	39	77	77	38	21
	°F	120	102	170	170	100	70
PRESS	kPa	7	0	117	0	152	
	psig	1	0	17	0	22	
SPECIFIC GRAVITY		0.0808		0.900		0.836	
SPECIFIC HEAT		0.730		0.474		0.599	
VISCOSITY cps		0.760		0.272		0.719	
HEAT QUANTITIES							
	kJ/kg	149		151		95	
	btu/#	64		65		41	

TABLE 10B HEAT AND MATERIAL BALANCE FOR #5 FRACTIONATOR

BLOCK FLOWSHEET NO.		36		39		40	
See Fig. 2		#5 Frac. Feed		3tms.fm.#5 Frac.		Ovhd.fm.#5 Frac.	
		DESIGN	OPER.	DESIGN	OPER.	DESIGN	OPER.
FLOW RATE	kg/s	0.371	0.151	0.230	0.143	0.141	0.0078
	#/hr	2947	1200	1825	1138	1122	62
COMPONENTS							
METHANOL	kg/s	0.0005	0.0008			0.0005	0.0005
	#/hr	4	6			4	4
FURFURAL	kg/s						
	#/hr						
ACETIC	kg/s						
ACID	#/hr						
SULFUR	kg/s						
DIOXIDE	#/hr						
ETHANOL	kg/s	0.233	0.130	0.221	0.129	0.0126	0.0006
	#/hr	1851	1035	1751	1025	100	5
ETHYL	kg/s	0.117	0.0058		0.0004	0.117	0.0054
ACETATE	#/hr	929	46		3	929	43
METHYL	kg/s		0.0001				0.0001
ACETATE	#/hr		1				1
WATER	kg/s	0.021	0.014	0.0093	0.014	0.0112	0.0011
		163	112	74	110	89	9
PROPERTIES							
TEMP.	°C	38	21	78	79	54	61
	°F	100	70	173	175	130	141
PRESS	kPa	152		152	3	7	0
	psig	22		22	0.4	1	0
SPECIFIC GRAVITY		0.836		0.766		0.899	
SPECIFIC HEAT		0.599		0.846		0.532	
VISCOSITY cps		0.719		0.482		0.382	
HEAT QUANTITIES							
	kJ/kg	95		277		121	
	btu/#	41		119		52	

TABLE 10B (CONTINUED)

BLOCK FLOWSHEET NO.		41		42		45		43	
See Fig. 2		Btms. fm. separ.		Feed to #6 frac.		Btms. fm.#6Frac.		Ovhd.fm.#6 Frac.	
		DESIGN	OPER.	DESIGN	OPER.	DESIGN	OPER.	DESIGN	OPER.
FLOW RATE	kg/s	0.085	0.019	0.449	0.015	0.108	0.0038	0.341	0.0110
	#/hr	677	150	3565	117	858	30	2707	87
COMPONENTS									
METHANOL	kg/s	0.0005	0.0005		0.0001				0.001
	#/hr	4	4		1				1
FURFURAL	kg/s								
	#/hr								
ACETIC	kg/s								
ACID	#/hr								
SULFUR	kg/s								
DIOXIDE	#/hr	--							
ETHANOL	kg/s	0.0126	0.0006	0.0089	0.0004			0.0089	0.0004
	#/hr	100	5	71	3			71	3
ETHYL	kg/s	0.0089	0.0016	0.418	0.014	0.018	0.0038	0.310	0.0098
ACETATE	#/hr	71	13	3315	108	858	30		78
METHYL	kg/s		0.001		0.001				0.0001
ACETATE	#/hr		1		1				1
WATER	kg/s	0.063	0.016	0.023	0.0005			0.023	0.0005
	#/hr	502	127	179	4			179	4
PROPERTIES									
TEMP.	°C	40	25	40	21	77	77	40	24
	°F	104	77	104	70	170	170	104	75
PRESS	kPa	7		7		117	1	7	0
	psig	1		1		17	0.2	1	0
SPECIFIC GRAVITY		0.958		0.903		0.900		0.904	0.503
SPECIFIC HEAT		0.894		0.494		0.474		0.503	
VISCOSITY		0.688		0.405		0.272		0.413	
HEAT QUANTITIES									
	KJ/kg	149		84		151		84	
	btu/#	64		36		65		36	

Table 11B HEAT AND MATERIAL BALANCE FOR EtAc SEPARATOR & NO. 6 FRACTIONATOR

BLOCK FLOWSHEET NO.		40		44		43		42	
See Fig. 2		Ovhd.fm. #5 Frac.		Water		Ovhd.fm.#6 Frac.		Ovhd. fm. Separ.	
		DESIGN	OPER.	DESIGN	OPER.	DESIGN	OPER.	DESIGN	OPER.
FLOW RATE	kg/s	0.141		0.052	0.015	0.341	0.0110	0.449	0.015
	#/hr	1122	62	413	117	2707	87	3565	117
COMPONENTS									
METHANOL	kg/s	0.0005	0.0005				0.0001		0.0001
	#/hr	4	4				1		1
FURFURAL	kg/s								
	#/hr								
ACETIC	kg/s								
ACID	#/hr								
SULFUR	kg/s								
DIOXIDE	#/hr								
ETHANOL	kg/s	0.0126	0.0006			0.0089	0.0004	0.0089	0.0004
	#/hr	100	5			71	3	71	3
ETHYL	kg/s	0.117	0.0054			0.310	0.0098	0.422	0.014
ACETATE	#/hr	929	43			2457	78	3315	108
METHYL	kg/s		0.0001				0.0001		0.0001
ACETATE	#/hr		1				1		1
WATER	kg/s	0.0112	0.0011	0.052	0.015	0.023	0.0005	0.023	0.0005
	#/hr	89	9	413	117	179	4	179	4
PROPERTIES									
TEMP	°C	72	61	82	21	40	24	40	21
	°F	130	141	180	70	104	75	104	70
PRESS	kPa	7	0	7		7	0	7	
	psig	1	0	1		1	0	1	
SPECIFIC GRAVITY		0.899		0.999		0.904		0.903	
SPECIFIC HEAT		0.532		1.000		0.503		0.494	
VISCOSITY cps		0.382		1.100		0.413		0.405	
HEAT QUANTITIES									
	kJ/kg	121		344		84		84	
	btu/#	52		148		36		36	

TABLE 12B HEAT AND MATERIAL BALANCE FOR #10 FRACTIONATOR

BLOCK FLOWSHEET NO.		45		101		104	
See Fig. 2		Feed to #10Frac.		Btm.fm.#10 Frac.		EtAc Prod.	
		DESIGN	OPER.	DESIGN	OPER.	DESIGN	OPER.
FLOW RATE	kg/s	0.108	0.0038			0.108	0.0038
	#/hr	858	30			858	30
COMPONENTS							
METHANOL	kg/s						
	#/hr						
FURFURAL	kg/s						
	#/hr						
ACETIC	kg/s						
ACID	#/hr						
SULFUR	kg/s						
DIOXIDE	#/hr						
ETHANOL	kg/s						
	#/hr						
ETHYL	kg/s	0.108	0.0038			0.108	0.0038
ACETATE	#/hr	858	30			858	30
METHYL	kg/s						
ACETATE	#/hr						
WATER	kg/s						
	#/hr						
PROPERTIES							
TEMP.	°C	77	77			77	77
	°F	170	170			170	170
PRESS	KPa	117	1			117	1
	psig	17	0.2			17	0.2
SPECIFIC GRAVITY		0.900				0.900	
SPECIFIC HEAT		0.474				0.474	
VISCOSITY cps		0.272				0.272	
HEAT QUANTITIES							
	kJ/kg	151				151	
	btu/#	65				65	

Not Enough Data

Not Enough Data

TABLE 8B

HEAT AND MATERIAL BALANCE FOR #7 FRACT. 98 TO 99.6% FURF. PURITY

BLOCK FLOWSHEET NO.		71A		103		50	
See Fig. 5		Kettle		To Day Tank		Product	
		DESIGN	OPER.	DESIGN	OPER.	DESIGN	OPER
FLOW RATE	kg/s						0.0037
	#/hr						29
COMPONENTS							
METHANOL	kg/s						
	#/hr						
FURFURAL	kg/s						0.0037
	#/hr	98%	98%	98%+	98%+		29
ACETIC	kg/s						
ACID	#/hr						
SULFUR	kg/s						
DIOXIDE	#/hr						
ETHANOL	kg/s						
	#/hr						
ETHYL	kg/s						
ACETATE	#/hr						
METHYL	kg/s						
ACETATE	#/hr						
WATER	kg/s						
	#/hr						
PROPERTIES							
TEMP.	°C						40
	°F						104
PRESS	kPa						
	psig						
SPECIFIC GRAVITY							
SPECIFIC HEAT							
VISCOSITY cps							
HEAT QUANTITIES							

APPENDIX C

ABSTRACTS FROM PERTINENT PATENTS

UNITED STATES PATENT 4,002,525 Baierl January 11, 1977

Chemical Recovery From Waste Liquors Utilizing Indirect Heat Exchangers in Multi-Stage Evaporation Plus Contact Steam Stripping.

A method of treating waste liquors such as those derived from the sulfite or Kraft pulp making process is disclosed which provides recovered by-products of high purity while moreover decreasing the total amount of process steam required. The method comprises steam stripping the evaporator condensate feed to remove volatile chemical by-products therefrom, and thereafter directing the stripping steam for reuse in concentrating additional volumes of feed in the evaporator. In this manner, the only steam lost during the stripping operation is that used for increasing the sensible heat of the evaporator condensate feed within the steam stripping column. The condensed steam and volatile by-products resulting from evaporator heating operation are then preferable directed to a fractionation column or columns in order to separate and recover the valuable by-products for reuse or sale. In situations where the condensate feed contains volatile noncondensible gases which are valuable for reuse, the evaporator condensate feed may be preheated and contacted with evaporator vent gases. The latter are partially condensed to allow the noncondensible gases to be recovered and reused.

UNITED STATES PATENT 4,016,180 Baierl April 5, 1977

Chemical Concentration by Adsorption

A low cost, two-stage adsorption-desorption method of concentrating dilute supplies of chemicals is provided which uses a minimum of energy in the form of process steam and yields highly concentrated supplies of end products which are suitable for reuse or sale. The methods hereof are particularly adapted for concentrating waste condensates derived from pulp-making operations such as the Kraft or Sulfite processes, but in general is also applicable for treating all types

of dilute organic or inorganic adsorbable chemicals. The invention involves first adsorbing a chemical fraction from a dilute stream thereof onto activated carbon, followed by regenerating the adsorbed chemicals and concentrating the same by fractional distillation, whereupon the partially concentrated chemicals are again adsorbed, regenerated, subjected to a second fractional distillation concentration step, and recovered. In preferred alternate procedures, aqueous sulfite waste condensates containing minor amounts of acetic acid, methanol, furfural and sulfur dioxide are treated by the methods hereof to yield concentrated quantities of acetic acid, ethyl acetate or furfural.

UNITED STATES PATENT 4,071,398 Baierl January 31, 1978

Chemical Concentration by Sequential Activated Carbon Adsorption and Fractionation.

A continuous, low cost method of concentrating dilute streams containing fractions of adsorbable chemicals is disclosed which minimizes heat consumption and provides highly concentrated supplies of valuable chemicals which are suitable for reuse or sale without substantial further processing. The methods hereof are particularly adapted for concentrating waste condensates derived from pulp-making operations such as the Kraft or sulfite processes, but in general are also applicable for treating a wide variety of dilute organic or inorganic adsorbable chemicals. The invention involves initially adsorbing and concentrating a chemical fraction from the dilute stream followed by desorption and recycling of the adsorbed materials to further concentrate the same, whereupon the desorbed chemicals are directed to a second concentration zone and concentrated therein; at this point the partially concentrated stream is diverted back to the adsorption zone for further adsorption and concentration simultaneously with the dilute stream initially passing there through while concentration continues in the second zone to yield a final product having a concentration on the order of 90% by weight or better. In preferred forms only a single fractionating column is employed in the second concentration stage which minimizes capital costs and reduces steam consumption, while recycling back to the adsorption zone permits continuous operation of one fractionation column doing the work of two or more columns. Thus, dual use of the single fractionator column in both intermediate and final concentration steps allows continuous operations with equipment heretofore used only in batch-type operations.

APPENDIX D

EQUIPMENT SPECIFICATIONS

The equipment used in the chemical recovery system were sized as follows.

The vent tank is 1.2 m (4 ft.) in diameter and is 2.0 m (6 ft. 8 in.) high. There is no packing in this unit. The precondenser is 0.6 m (2 ft.) in diameter and 5 m (16½ ft.) high. It has 2,696,254 kJ/s (9,200,000 BTU/hr) capacity. The vent condenser is 0.34 m (14 in.) in diameter and 3.2 m (10½ ft) high and has 1.172,000 kJ/s (5,000,000 BTU/hr) capacity.

The steam stripper is 1.7 m (5½ ft.) in diameter and 5.2 m (17 ft.) high. It contains 0.91 m (3 ft.) of packing with 7 theoretical plates. The pressure drop through the packing is 5.17 Pa/m packing (0.75 inches of water/foot of packing). The heat exchanger which heats the condensate to the steam stripper is rated at 3.956,460 KJ/s (13,500,000 BTU/hr).

Each carbon tower is 2.7 m (9 ft.) in diameter and 18.3 m (60 ft.) high. It contains 36,000 kg (40 tons) of carbon and will hold 77.6 m^3 (20,500 gal.) of liquid. The surge tank is 3.7 m (12 ft.) in diameter and 9.4 m (31 ft.) high. It will hold 99.2 m^3 (26,200 gal.) of condensate.

Number 1 fractionator is 0.91 m (3 ft.) in diameter and 7.1 m (23 ft. 2 in.) high. The stripping section has 2.7 m (9 ft.) of packing or 7 theoretical plates. It has a pressure drop of 7.18 Pa/m (0.88 inches of water per foot) of packing. The rectification section has 1.8 m (6 ft.) of packing or 7 theoretical plates. It has a pressure drop of 7.84 Pa/m (0.96 inches of water per foot) of packing. The condenser for this column is 0.56 m (22 in.) in diameter with 8.8 m (8 ft.) of tubing. It is rated at 1,361,901 kJ/s (4,647,000 BTU/hr.). The reboiler for this fractionator is rated at 1.145,615 kJ/s (3,909,000 BTU/hr).

Number 2 fractionator is 0.51 m (20 in.) in diameter and 8.8 m (29 ft.) in height. The stripping section has 4.5 m (15 ft.) of packing or 24 theoretical plates. The pressure drop through the packing is 20.41 Pa/m (2.5 inches of water per foot) of packing. The rectification section has 2.1 m

(7 ft.) of packing or 14 theoretical plates. It has a pressure drop of 23.59 Pa/m (2.89 inches of water per foot) of packing. The condenser for this column is .273 m (10-3/4 in.) in diameter and has tubes 1.8 m (6 ft.) long. It is rated at 198,116 kJ/s (676,000 BTU/hr.). The reboiler is rated at 200,460 kJ/s (684,000 BTU/hr.).

Number 3 fractionator is 0.61 m (2 ft.) in diameter and 9.3 m (30½ ft.) high. The stripping section contains 3.0 m (10 ft.) of packing or 17½ theoretical plates. The pressure drop through the packing is 3.51 Pa/m (0.43 inches of water per foot) of packing. The rectification section contains 2.4 m (8 ft.) of packing or 13 theoretical plates. The pressure drop through this packing is 8.90 Pa/m (1.09 inches of water per ft.) of packing. The condenser for this column is .35 m (14 in.) in diameter and the tubes are 2.4 m (8 ft.) long. It has a rated capacity of 477,120 kJ/s (1,628,000 BTU/hr.). The reboiler is rated at 494,997 KJ/s (1,689,000 BTU/hr.). The feed tank for this unit is 3.4 m (11 ft.) in diameter and 5.5 m (18 ft.) high. It will hold 48 m (12,800 gal.) of feed.

Number 7 fractionator is .30 m (1 ft.) in diameter and 4.16 m (13 ft. 8 in.) high. The stripping section has 1.8 m (6 ft.) of packing or 10 theoretical plates. The pressure drop through this packing is 5.71 Pa/m (0.7 in. of water per foot) of packing. The rectification section has 1.2 m (4 ft.) of packing or 9 theoretical plates. It has a pressure drop of 1.63 Pa/m (0.2 in. of water per foot) of packing. The condenser for this column is .22 m (8-5.8 in.) in diameter and has tubes 1.2 m (4 ft.) long. It is rated at 143,312 KJ/s (408,000 BTU/hr.). The reboiler is rated at 143,312 kJ/s (489,000 BTU/hr.). The furfural day tank is 1.1 m (3½ ft.) in diameter and 1.8 m (6 ft.) high. It will hold 1.65 m^3 (436 gallons).

Number 5 fractionator is .61 m (2 ft.) in diameter and 7.21 m (23 ft. 8 in.) high. The stripping section has 2.29 m (7½ ft.) of packing or 12 theoretical plates. The pressure drop through this packing is 5.71 Pa/m (0.7 in. of water per foot) of packing. The rectification section has 2.7 m (9 ft.) of packing or 16 theoretical plates. The pressure drop through this packing is 7.18 Pa/m (0.88 in. of water per foot) of packing. The condenser for this column is .323 m (12-3/4 in.) in diameter and has tubes of 2.44 m (8 ft.) long. It has a rated capacity of 317,982 kJ/s (1,085,000 BTU/hr.). The reboiler for this column has a rated capacity of 326,774 kJ/s (1,115,000 BTU/hr.

The #5 separator is .61 m (2 ft.) in diameter and 1.98 m (6½ ft.) tall. It has no packing.

Number 6 fractionator is .91 m (3 ft.) in diameter and 5.5 m (18 ft.) high. The stripping section has 2.4 m (8 ft.) of packing or 8 theoretical plates. The pressure drop through this packing is 8.74 Pa/m (1.07 in. of water per foot) of packing. The rectification section has .91 m (3 ft.) of packing or 2 theoretical plates. The pressure drop through this packing is 5.71 Pa/m (0.7 in. of water per foot) of packing. The condenser for this column is .41 m (16 in) in diameter with tubes 2.4 m (8 ft.) long. It is rated at 617,793 kJ/s (2,108,000 BTU/hr.). The reboiler for this column is rated at 545,112 kJ/s (1,860,000 BTU/hr.).

Number 10 fractionator is .30 m (1 ft.) in diameter and 7.6 m (25 ft.) high. The stripping section has 2.1 m (7 ft.) of packing or 13 theoretical plates. The rectification section has 2.1 m (7 ft.) of packing or 16 theoretical plates. The condenser for this column is .168 m (6-5/8 in.) in diameter with 2.4 m (8 ft.) tubes. This condenser is rated at 79,129 kJ/s (270,000 BTU/hr.). The reboiler is rated at 118,107 kJ/s (403,000 BTU/hr.).

GLOSSARY

bottoms: The discharge from the bottom of a fractionator or steam stripper.

overhead: The discharge from the top of a fractionator or steam stripper.

rectification section: The section above the feed plate of a fractionator.

stripper: A steam stripping unit.

stripping section: The section below the feed plate in a fractionator.

TECHNICAL REPORT DATA
(Please read Instructions on the reverse before completing)

1. REPORT NO. EPA-600/2-79-207	2.	3. RECIPIENT'S ACCESSION NO.
4. TITLE AND SUBTITLE VOLATILE COMPONENT RECOVERY FROM SULFITE EVAPORATOR CONDENSATE		5. REPORT DATE December 1979 issuing date 6. PERFORMING ORGANIZATION CODE
7. AUTHOR(S) Walter A. Sherman, William A. Dryer, and John D. Michna		8. PERFORMING ORGANIZATION REPORT NO.
9. PERFORMING ORGANIZATION NAME AND ADDRESS Flambeau Paper Co. 200 First Avenue North Park Falls, Wisconsin 54552		10. PROGRAM ELEMENT NO. 1BB610;01-05 11. CONTRACT/GRANT NO. S-803302-01-0
12. SPONSORING AGENCY NAME AND ADDRESS Industrial Environmental Research Laboratory Office of Research and Development U.S. Environmental Protection Agency Cincinnati, Ohio 45268		13. TYPE OF REPORT AND PERIOD COVERED Final; 7/22/74 - 5/14/78 14. SPONSORING AGENCY CODE EPA/600/12

15. SUPPLEMENTARY NOTES

16. ABSTRACT

This study is on the operation and modification of a demonstration unit to remove sulfur dioxide, methanol, furfural and acetic acid from its sulfite evaporator condensate. This unit consisted of a steam stripper, vent tank SO_2 recovery, activated carbon adsorption columns and fractional distillation columns.

The steam stripping and fractional distillation of the stripped material parts operate very successfully with little maintenance being required. In an extended test run, the stripping process removed 84.1% of the SO_2, 100% of the furfural, and 95.5% of the methanol from the condensate at a steam rate of 2.8% or 27.7 lbs. of steam/1000 lbs. of condensate stripped. The SO_2 is separated, cooled, and returned to the sulfite cooking acid make up system. Furfural is recovered at 90% purity which can be sold as crude, but Flambeau purifies it to 99.5%. Methanol is recovered with less than 1% water and is suitable for burning or some industrial uses. The stripping steam is also used to heat the first effect of the multi-effect evaporator.

Activated carbon adsorption and ethyl alcohol regeneration of the carbon removes acetic acid from the condensate and recovers it as ethyl acetate, which upon concentration by fractional distillation is 99.5+% pure. This part of the process is still in the development stage.

17. KEY WORDS AND DOCUMENT ANALYSIS

a. DESCRIPTORS	b. IDENTIFIERS/OPEN ENDED TERMS	c. COSATI Field/Group
Evaporators, Condensation, Activated Carbon Adsorption, Sulfite pulping, Spent sulfite liquors, Paper industry, Biochemical oxygen demand	Steam stripping Fractional distillation	13B

18. DISTRIBUTION STATEMENT RELEASE TO PUBLIC	19. SECURITY CLASS (This Report) UNCLASSIFIED	21. NO. OF PAGES 73
	20. SECURITY CLASS (This page) UNCLASSIFIED	22. PRICE

EPA Form 2220-1 (Rev. 4-77) PREVIOUS EDITION IS OBSOLETE

☆ U.S. GOVERNMENT PRINTING OFFICE 1980-657-146/5523