United States
Environmental Protection
Agency

Robert S. Kerr Environmental Research
Laboratory
Ada OK 74820

EPA-600/2-80-064
April 1980

Research and Development

Solvent Extraction of Wastewaters from Acetic-Acid Manufacture

RESEARCH REPORTING SERIES

Research reports of the Office of Research and Development, U.S. Environmental Protection Agency, have been grouped into nine series. These nine broad categories were established to facilitate further development and application of environmental technology. Elimination of traditional grouping was consciously planned to foster technology transfer and a maximum interface in related fields. The nine series are:

1. Environmental Health Effects Research
2. Environmental Protection Technology
3. Ecological Research
4. Environmental Monitoring
5. Socioeconomic Environmental Studies
6. Scientific and Technical Assessment Reports (STAR)
7. Interagency Energy-Environment Research and Development
8. "Special" Reports
9. Miscellaneous Reports

This report has been assigned to the ENVIRONMENTAL PROTECTION TECHNOLOGY series. This series describes research performed to develop and demonstrate instrumentation, equipment, and methodology to repair or prevent environmental degradation from point and non-point sources of pollution. This work provides the new or improved technology required for the control and treatment of pollution sources to meet environmental quality standards.

This document is available to the public through the National Technical Information Service, Springfield, Virginia 22161.

EPA-600/2-80-064
April 1980

SOLVENT EXTRACTION OF WASTEWATERS FROM ACETIC-ACID MANUFACTURE

by

N. Lawrence Ricker & C. Judson King
Department of Chemical Engineering
University of California
Berkeley, California 94720

EPA Grant No. R803773

Project Officer

John Matthews
Source Management Branch
Robert S. Kerr Environmental Research Laboratory
Ada, Oklahoma 74820

ROBERT S. KERR ENVIRONMENTAL RESEARCH LABORATORY
OFFICE OF RESEARCH AND DEVELOPMENT
U. S. ENVIRONMENTAL PROTECTION AGENCY
ADA, OKLAHOMA 74820

DISCLAIMER

This report has been reviewed by the Robert S. Kerr Environmental Research Laboratory, U.S. Environmental Protection Agency, and approved for publication. Approval does not signify that the contents necessarily reflect the views and policies of the U.S. Environmental Protection Agency, nor does mention of trade names or commercial products constitute endorsement or recommendation for use.

FOREWORD

The Environmental Protection Agency was established to coordinate administration of the major Federal programs designed to protect the quality of our environment.

An important part of the Agency's effort involves the search for information about environmental problems, management techniques and new technologies through which optimum use of the nation's land and water resources can be assured and the threat pollution poses to the welfare of the American people can be minimized.

EPA's Office of Research and Development conducts this search through a nationwide network of research facilities.

As one of these facilities, the Robert S. Kerr Environmental Research Laboratory is responsible for the management of programs to: (a) investigate the nature, transport, fate and management of pollutants in ground water; (b) develop and demonstrate methods for treating wastewaters with soil and other natural systems; (c) develop and demonstrate pollution control technologies for irrigation return flows; (d) develop and demonstrate pollution control technologies for animal production wastes; (e) develop and demonstrate technologies to prevent, control, or abate pollution from the petroleum refining and petrochemical industries; and (f) develop and demonstrate technologies to manage pollution resulting from combinations of industrial wastewaters or industrial/municipal wastewaters.

Industrial process wastewater streams frequently contain appreciable concentrations of raw materials, side reaction, compounds, and process products. Those compounds which are marketable represent an attractive area for recovery/recycle/reuse research since their separation from a waste stream reduces the waste treatment loading concurrently with offering a means of capital investment recovery on separation equipment. Solvent extraction technology has not been applied to waste stream cleanup as vigorously as it has to manufacturing operations. This report contains the findings of study applying solvent extraction technology in the removal of product losses from acetic acid manufacturing wastewater streams. A cost estimate prepared from bench scale data indicates a possible 244% per year return on investment before taxes; this is an attractive alternative to wastewater treatment costs.

William C. Galegar

W. C. Galegar
Director
Robert S. Kerr Environmental Research Laboratory

ABSTRACT

Wastewater samples were obtained from two major processes for the manufacture of acetic acid. The chemical oxygen demand (COD) of these wastewaters varied from about 1000 parts per million (ppm) to over 410,000 ppm. The acetic acid was generally the major organic chemical in the samples; its concentration varied from about 30 ppm to nearly 18 weight percent (wt.%).

Solvent extraction was evaluated as a potential treatment method for such wastewaters. Several possible goals for an extraction process were considered: the recovery of chemical values, a large COD reduction, i.e., for pollution abatement or as a pretreatment for a biological oxidation system, and/or the removal of toxic or refractory chemicals. For the wastewater samples studied, extraction appeared to be too expensive to be practical unless recovery of a marketable chemical were possible. Acetic acid was the only chemical in the wastewater having a market potential.

Many organic chemicals were screened for use as extractants for acetic acid. Long-chain, tertiary alkyl amines, dissolved in organic diluents, appeared to be the most promising extractants, except for certain wastewaters containing chlorinated acetaldehydes. Amine extractants were studied extensively in small-scale experiments to determine phase equilibria, extractant regenerability, mass-transfer characteristics, and emulsification tendencies. The choice of the organic diluent had a large effect on behavior of the extractant; C_9 ketones were found to be attractive.

A cost estimate was prepared for an extraction process to recover acetic acid from a 22,700 kilogram/hour (kg/h) (100 gals/minute (GPM)) wastewater containing 5 wt. % acid. Estimated direct-fixed-capital was $1,030,000, with an annual operating cost of $253,000/year ($5.90/1000 gal), resulting in a return on investment before taxes (ROIBT) of 244% per year. The ROIBT for a 1 wt. % acetic acid wastewater was only about 30%; however, this might be increased by further optimization of the amine/diluent combination.

This report was submitted in fulfillment of Grant No. R803773 by the University of California under the sponsorship of the U.S. Environmental Protection Agency and covers a period from 6-1-75 to 9-30-78, and work was completed as of 9-30-78.

CONTENTS

Foreword iii
Abstract iv
Figures. vii
Tables viii
Acknowledgment x

1. Introduction. 1
   General classifications of Western treatment processes. 1
   Steam-stripping processes. 2
   Solvent-extraction processes 5
   Comparison of steam-stripping and solvent-extraction processes 7
   General characteristics of wastewaters from acetic-acid manufacture. 11
2. Conclusions and Recommendations 13
3. Quantitative Analysis of Wastewaters from the Manufacture of Acetic Acid. 15
   Methods of wastewater analysis 17
   Wastewater composition 27
4. General Process-design Strategy 28
   Extraction for profit. 28
   Extraction for removal of hazardous chemicals. . 33
   Extraction for waste COD reduction 34
   Summary of treatment strategy--goals for the extraction process 34
5. Solvents for Extraction of Acetic Acid and Chlorinated Acetaldehydes 35
   Desirable solvent properties 35
   Weakly-interacting acetic-acid extractants . . . 36
   Organophosphorus extractants 37
   Amine extractants. 39
   Liquid-liquid equilibria for amine extractants . 41
   Effect of diluent type, amine concentration and acid concentration of K_D 50
   Extraction equilibria for Alamine 336 in ketone diluents. 52
   Prediction of the acetic acid distribution coefficient for an amine extractant. 57
   Extractants for chlorinated acetaldehydes. . . . 60
   Solvent-regeneration studies 63
   Heat stability of amine extractants 65

CONTENTS (continued)

6. Experimental Extraction Results. 68
RDC extraction runs 68
Countercurrent separatory funnel system 68
7. Extraction Processes for Acetic Acid Recovery. . . . 109
Solvent volatility considerations 109
Solvent K_D and selectivity. 112
Solvents selected for detailed process-design study. 113
Cost estimates. 114
Selection of a diluent for the Alamine 336 extractant. 127
Optimization of the Alamine 336/DIBK extraction system 128
Alternatives for regeneration of amine extractant. 129
Loss of solvent--cost and prevention. 131
Solvent purification--removal of non-volatile solutes 135
Summary of recommended extraction process for recovery of acetic acid 136
8. Treatment of Wacker-process Wastewaters. 141
Reactivity of Chlorinated Acetaldehydes 141
Process-design considerations for Wacker wastewaters 142
Pre-treatment to remove chlorinated acetaldehydes 143
Dual-solvent extraction 144
Recommendations for treatment of Wacker-process wastewaters 146
9. Summary of Findings. 148

References 152

FIGURES

Number		Page
1	Recovery of butyl acetate from water by steam-stripping	4
2	Schematic of phenosolvan process	6
3	Volatile-solvent extraction process	9
4	Dual-solvent extraction process	10
5	Extraction of acetic acid by di-tridecyl amine in various diluents	47
6	Extraction of acetic acid by Alamine 336 in various diluents	53
7	Extraction equilibria for 50 vol % Alamine 336 ketone diluents	54
8	Extraction equilibria for 50 vol. % Alamine 336 in DIBK, and in 3 parts DIBK/2 parts polar additive	56
9	Extraction of acetic acid from wastewater H by Alamine 336 in DIBK	58
10	Water-content of organic phase for extraction of wastewater H by Alamine 336/DIBK	59
11	Extraction of acetic acid with a lower-boiling solvent	110
12	Extraction of acetic acid with a higher-boiling solvent	111
13	ROIBT for acetic acid recovery vs. concentration of acid in wastewater feed	124
14	Chemical regeneration of amine extractant by caustic-wash process	130
15	Flowsheet of recommended acetic-acid recovery process	138
16	Conceptual design of dual-solvent extraction process for wacker-process wastewaters	145

TABLES

Number		Page
1	Sources of Wastewater Samples	16
2	Composition of Wastewater Sample A.	19
3	Composition of Wastewater Sample B.	20
4	Composition of Wastewater Sample C.	21
5	Composition of Wastewater Sample D.	22
6	Composition of Wastewater Sample E.	23
7	Composition of Wastewater Sample F.	24
8	Composition of Wastewater Sample G.	25
9	Composition of Wastewater Sample H.	26
10	Chemical Value of Wastewater Constituents	29
11	Estimated ROIBT for Recovery of Acetic Acid from Samples E-H	32
12	Amines Investigated in This Work.	42
13	Results for Extraction of Acetic Acid by Tertiary Amines Supplied by Ashland Chemical Company.	43
14	Representative Results for Extraction of Acetic Acid by Alamine 336.	44
15	Extraction of Acetic Acid by Asymmetric Tertiary Amines	45
16	Extraction of Acetic Acid by Several Secondary Amines	46
17	Extraction of Chlorinated Acetaldehydes by Several Common Solvents.	61
18	Conditions and Results for Mini-plant Extraction Run 1.	69
19	Run 2.	70
20	Run 3.	72
21	Run 4.	74
22	Run 5.	76
23	Run 6.	77
24	Run 7.	79
25	Run 8.	81
26	Run 9.	83
27	Run 10	84
28	Run 11	87
29	Run 12	90
30	Run 13	93
31	Run 14	96
32	Run 15	99

TABLES (continued)

Number		Page
33	Conditions and Results for Mini-plant Extraction Run 16	101
34	Run 17	103
35	Run 18	105
36	Run 19	107
37	Key Solvent Properties Used in Design Study	117
38	Estimated Cost of Extraction of Acetic Acid by Ethyl Acetate	119
39	Estimated Cost for Extraction of Acetic Acid by Cyclohexanone	120
40	Estimated Cost for Extraction of Acetic Acid by 40% TOPO in 2-hrpysnone	121
41	Estimated Cost for Extraction of Acetic Acid by 50% Alamine 336 in DIBK	122
42	Cost Estimate for DIBK/Alamine 336 Purification--Batch System	137

ACKNOWLEDGMENT

This report was prepared by the two authors. However, many others contributed in important ways to this project. Gilbert W. Sanchez and Edward E. Pittman were research assistants with the project and completed M.S. theses closely related to it. Much of their work is represented in this report. Professor John M. Prausnitz served as co-investigator and provided insight into the thermodynamics of solvent selection and performance. Professors F. Jensen, C. Heatcock and J. Hildebrand of the University of California, Department of Chemistry also advised on solvent possibilities. Nam-Sum Wang provided considerable help as a laboratory assistant. Professor F. Nakashio of Kyushu University, Japan, conducted several studies associated with this project during a sabbatical leave at Berkeley. Reiko Kubota and Marie Devlin handled the typing of the report efficiently.

Messrs. Jack Hale, Frank Mayhue, John Matthews and Leon Myers of the Robert S. Kerr Environmental Research Laboratory, U.S. Environmental Progection Agency, provided effective liaison and participated in several useful discussions.

SECTION 1

INTRODUCTION

It is now widely recognized that water pollution is a serious industrial problem. Solvent extraction, a well-established unit operation in the chemical industry, is becoming increasingly important as a treatment method for certain types of industrial wastewaters, primarily those containing organic chemicals.

This report describes research on the use of solvent extraction for the removal and recovery of organic chemicals from wastewaters. Although the results of the study have considerable generality, the specific problem considered is the development of an extraction process to treat acetic-acid-manufacturing wastewaters.

GENERAL CLASSIFICATIONS OF WASTEWATER TREATMENT PROCESSES

Wastewater treatment processes can be divided into two general classes, depending on what is eventually done with the pollutant(s). Non-recovery processes, such as biological oxidation, destroy the pollutant during treatment. Biological oxidation is the major technique for treatment of industrial wastewaters. It is an especially good method for dilute wastes that contain a wide range of organic contaminants. However, it is less effective for more concentrated industrial wastes, or for a waste stream containing a pollutant that is either slowly or non-biodegradable, or toxic to the bacteria in the process.

Thermally-regenerated, activated-carbon adsorption is another example of a non-recovery method suitable for dilute wastewaters. Incineration is sometimes used for more concentrated wastewaters, and in some areas of the United States wastewaters not amenable to other treatment methods are injected into deep wells in stable geological formation.

Recovery methods, on the other hand, recover one or more wastewater constituents. The recovered chemical value then helps to offset the cost of treatment, or in some cases, can even provide a net profit.

Since the recovery methods are typically more complex and require a higher capital investment, a wastewater must usually contain significant, marketable chemical value to justify recovery. However, a recovery method might also be chosen when non-recovery methods are unsuitable for a particular wastewater. For example, a wastewater might contain a highly toxic or refractory chemical, such as crotonaldehyde, that could be removed most economically by a recovery method.

Many well-established separation techniques are used industrially as recovery methods for wastewater treatment. Activated carbon adsorption with a recovery-type carbon-regeneration method, ion exchange, bubble flotation, steam stripping, and solvent extraction are typical examples (Nathan, 1978; Fox 1973; Cooper, 1966). For a given treatment problem, the physical and chemical characteristics of the pollutant and its concentration level in the wastewater determine the most appropriate recovery method. Activated-carbon adsorption and ion exchange are used primarily in fixed-bed processes for dilute wastewaters. These processes are usually too expensive to use for concentrated wastewaters because the high bed loadings involved in such cases would require either very large beds (high capital investment) or frequent regeneration (high operating costs).

On the other hand, stripping and extraction tend to be relatively insensitive to pollutant concentration. In extraction, for example, the solvent circulation rate, which has a large influence on equipment size and operating costs, depends mainly on the equilibrium distribution coefficient (K_D) of the principal pollutants at equilibrium, with K_D being defined as the weight fraction of pollutant in the solvent phase divided by that in the aqueous phase. Since K_D is usually not a strong function of pollutant concentration, at the concentrations usually found in wastewaters, the process cost per volume of wastewater is roughly constant.

STEAM-STRIPPING PROCESSES

Steam-stripping is probably the most widely used recovery process for organic pollutants, and as such is often the base case in a comparison of process alternatives for a particular industrial waste-treatment problem. Although solvent extraction treatment is the main concern of this work, some understanding of steam-stripping is important, both for proper perspective and because steam-stripping is occasionally used as one of the steps in solvent-extraction treatment.

Steam-stripping exploits the liquid-phase non-idealities

found in aqueous solutions of organic chemicals. A typical process schematic appears in Figure 1. This example process recovers butyl acetate, a common industrial solvent, which has a pure-component boiling point of 126.5°C at atmospheric pressure. In dilute aqueous solution, however, butyl acetate is actually more volatile than water (the relative volatility is about 390); hence, butyl acetate is the overhead product from the stripper. Energy consumption is, of course, far lower than would be the case if water were the overhead product. The water/butyl acetate system also exhibits a heterogeneous azeotrope; even though considerable water goes overhead with the butyl acetate, upon condensation the overhead forms two liquid phases, and simple phase-separation results in a 99 wt. % butyl acetate product.

The wide appeal of steam-stripping is mainly due to its simplicity and low capital investment relative to other recovery methods. Design is straightforward and usually does not require much experimental development. The major design uncertainty is often the stage efficiency (or its equivalent in a packed-tower design), which can be very low, on the order of 20% for systems involving pollutants with volatilities much different from that of water. Of course, if the relative volatility is large, the stage requirements are very small, and the stage efficiency does not affect the economics greatly.

As with any distillation-type process, steam-stripping is a high energy-user; this is probably its major disadvantage. Energy is needed to raise the feed water to the saturation temperature at the column pressure and then to vaporize the pollutant (and often a considerable amount of water) to form the overhead product. Feed-bottoms and condensate heat-exchange can reduce energy costs at the expense of increased complexity and capital investment.

An alternative is to operate the stripping column under vacuum. Vacuum operations can reduce energy consumption and yet avoid extra heat-exchange equipment (Rasquin, et al., 1978). The resulting lower operating temperature reduces the energy needed to raise the feed to the saturation point and often allows the use of waste steam, rather than more expensive high-pressure steam. Moreover, the lower temperature usually increases the relative volatility of the pollutant, which makes the separation easier, and it tends to reduce the scaling and corrosion problems that can occur with some wastewaters. The cost of the vacuum system will offset these advantages to some extent.

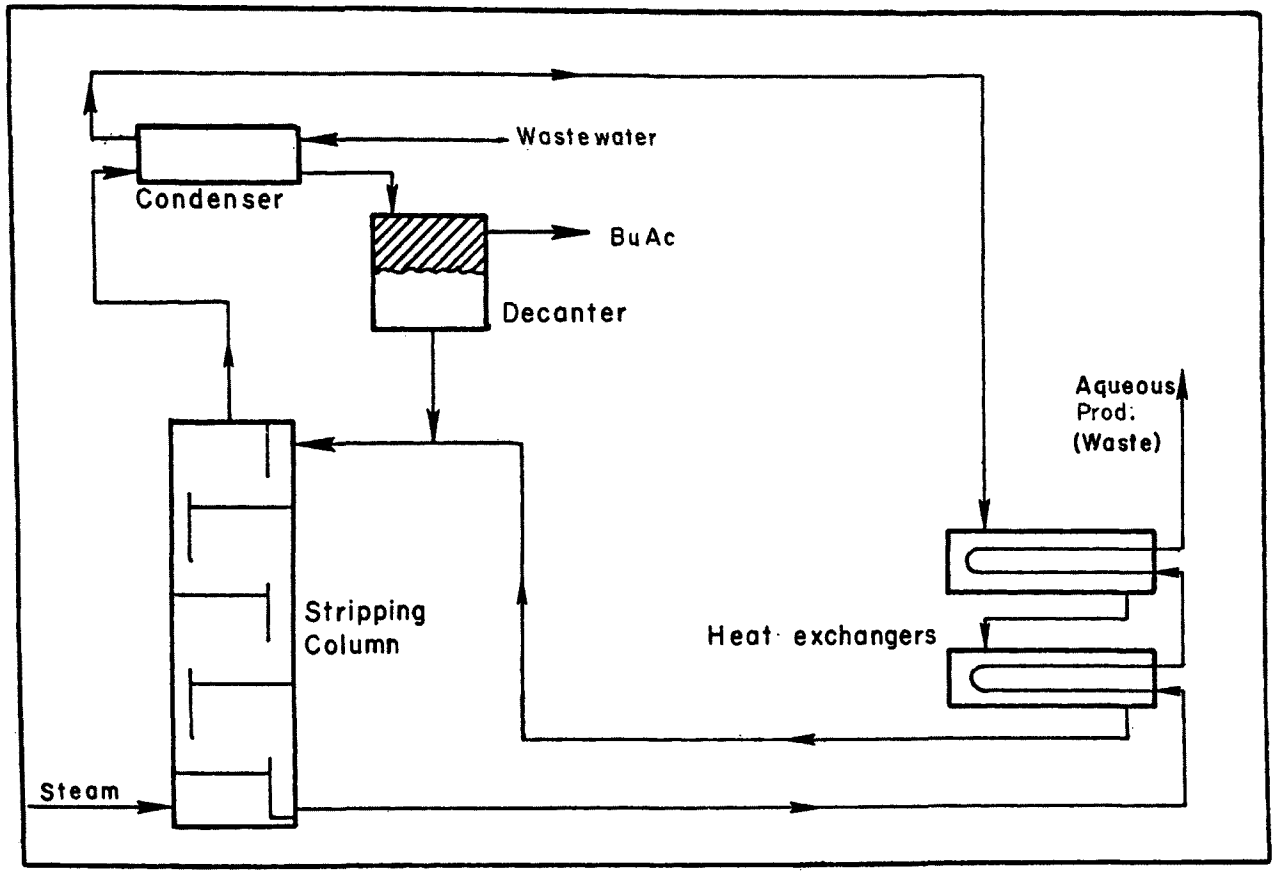

Figure 1. Recovery of butyl acetate from water by steam stripping.

Vacuum operation is especially attractive when the concentration of the pollutant to be recovered is low, which is usually the case for wastewaters. Then the vapor loading is small, and the column diameter is not much larger than would be the case for atmospheric pressure operation.

SOLVENT-EXTRACTION PROCESSES

As a recovery method for wastewater treatment, solvent-extraction is not as widely used as steam-stripping, but extraction does have important industrial applications. One of the best known of these is the "Phenolsolvan" process which was developed in Germany to treat coke-oven condensate wastewaters, containing high concentrations of phenolics (Wurm, 1968). The Phenosolvan process is worthy of some discussion since it is typical of solvent-extraction processes for wastewater treatment. It includes the usual three major processing steps: extraction (and subsequent phase separation); solvent recovery from the wastewater; and solvent regeneration (Figure 2). In the extraction step, a solvent with an affinity for the pollutant(s) to be recovered contacts the wastewater in an extraction device. The Phenolsolvan process uses di-isopropyl ether (DIPE) as the solvent, and the extractor is a mixer-settler cascade.

There are many types of continuous-extraction devices (Treybal, 1963). "Stagewise" contactors, such as the mixer-settler, attempt to provide a single equilibrium stage within each unit. These units can be connected in a counter-current cascade if the separation requires more than one stage. A mixer-settler consists of a mixing chamber, usually agitated, followed by a phase-separation device. Mixer-settlers are reliable, flexible and efficient, in that they often approach the operation of an ideal, equilibrium stage. Their main disadvantage is in separations requiring many equilibrium stages, when complexity, floor space, and capital investment requirements can be prohibitive. "Differential" contactors are usually columns in which the solvent and water phases flow counter-currently by gravity. The columns may be packed, spray, sieve-tray, rotating disc contactor (RDC) or pulsed. The most efficient differential extractors are agitated in some manner to enhance inter-phase mass transfer. These are advantageous for separations requiring the equivalent of a large number of equilibrium stages.

Solvents for wastewater treatment often have an appreciable water solubility (5,900 ppm for DIPE), and economics and pollution-control considerations usually dictate some form of solvent recovery. The Phenolsolvan process solvent-recovery system uses a recirculating, inert

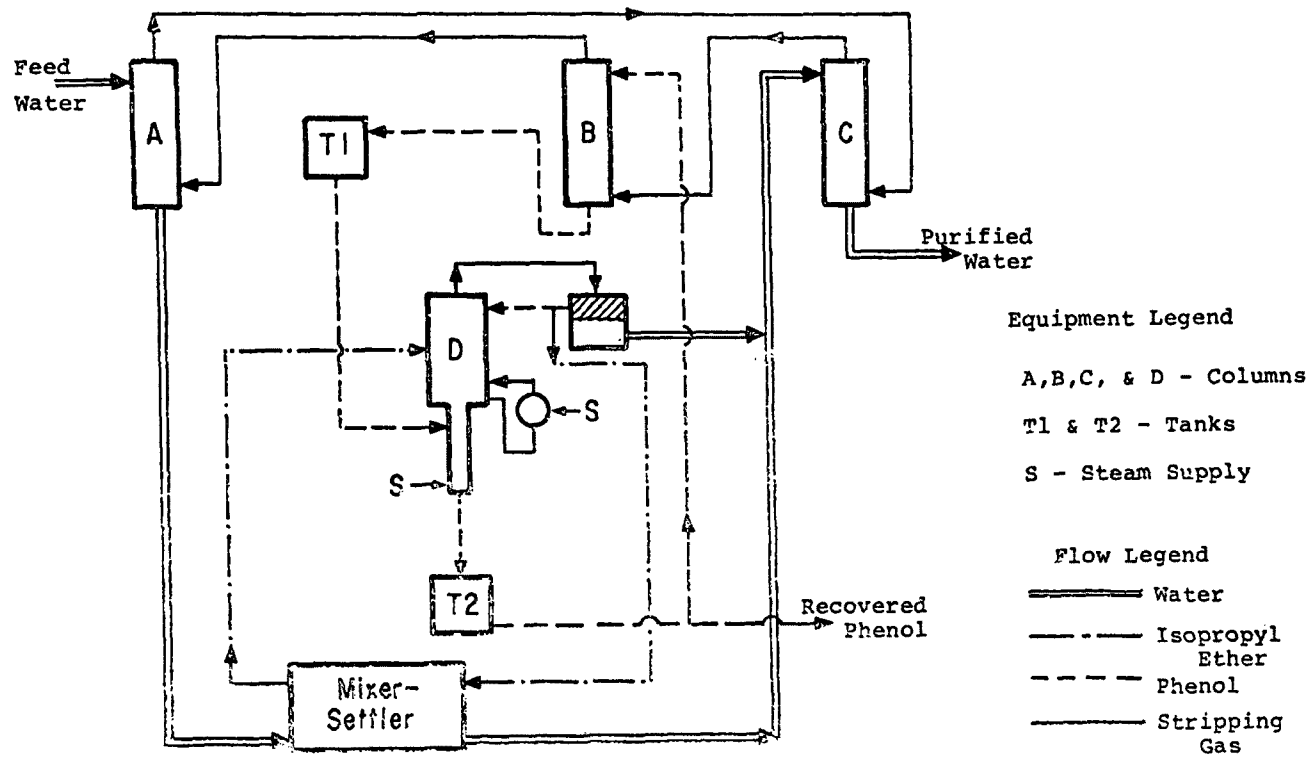

Figure 2. Schematic of phenosolvan process.

gas in a series of stripping and absorption columns (labelled A, B, and C in Figure 2). Steam-stripping is an alternative solvent-recovery method; another is a separate extraction with a water-insoluble solvent to recover the primary solvents (Earhart, et al., 1977).

For solvent regeneration, the Phenolsolvan process uses distillation (column D). Regenerated DIPE is the overhead product and recovered phenolics are the bottom product. Distillation is the most common regeneration method, although other methods are possible, e.g., back-extraction of phenolics with concentrated aqueous sodium hydroxide (NaOH) solution.

It is interesting to note that less energy would be consumed in the regeneration step if a high-boiling solvent were used and the pollutants were the overhead product. The Phenolsolvan process uses DIPE rather than a high-boiling solvent because coke-oven condensates contain emulsified, non-volatile organics and tar-like substances that would tend to build up in a high-boiling solvent and would eventually degrade solvent performance. This is a common problem in wastewater treatment and encourages the use of volatile solvents.

COMPARISON OF STEAM-STRIPPING AND SOLVENT-EXTRACTION PROCESSES

The Phenolsolvan process is illustrative of both the drawbacks and advantages of solvent extraction as a wastewater treatment method. The major drawback is complexity. The extraction step is only a small part of a typical extraction process. A good deal of the capital investment and nearly all of the energy requirements are in the regeneration step. This inherent complexity makes extraction relatively difficult to design and operate, and it results in a capital-intensive process.

Moreover, the fundamental phenomena involved in extraction are not really well understood, at least when compared with distillation, and extraction processes usually require pilot-plant development. A critical step in this development is the selection and testing of a solvent. Solvent selection must usually be done individually for each waste-treatment problem, i.e., there is no "universal solvent", and the best solvent for a given problem is determined by the pollutant(s). Solvents are often expensive, and the process must be carefully designed to avoid any appreciable loss of solvent.

These factors tend to complicate the use of extraction

for wastewater treatment. One notable attempt to design a simpler, generalized extraction process that could be used in a wide range of wastewater treatment problems is the work of Earhart, et al. (1977). These investigations show that a volatile C-4 hydrocarbon such as isobutane or isobutylene can be a good extractant for many non-polar and slightly polar organic pollutants, and that the use of this solvent eliminates the need for solvent recovery from the wastewater (Figure 3).

However, this "volatile-solvent extraction" (VSE) process is not suitable for polar pollutants like phenol. For this type of problem, Earhart, et al. suggest a "dual-solvent extraction" process in which a polar solvent, such as DIPE, extracts the polar pollutant from the water, and then VSE recovers the polar solvent from the water (Figure 4). While VSE may indeed be a good solvent-recovery method, the dual-solvent process does not reduce process complexity, and the choice of a polar solvent is still a problem, in general.

Steam stripping, on the other hand, is simpler, and a single conceptual design applies to most wastewater-treatment problems. Consequently, extraction is not competitive with stripping unless the separation factor for the pollutant-water separation is poor for stripping and/or very favorable for extraction. For many organic pollutants, the separation factor for stripping, i.e., the pollutant-water relative volatility, is high; and while the corresponding K_D value is likely to be high as well, it is usually not high enough to justify the complexity and larger capital investment of an extraction process.

Earhart, et al. (1976) present a detailed economic analysis for the recovery of several representative organic pollutants from water by extraction and by steam-stripping at atmospheric pressure. For butyl-acetate recovery, for example, they estimate a treatment cost of \$0.16/cubic meter (m^3) (\$0.61/1000 gal) wastewater with a capital investment of \$41,700 for stripping and \$0.19/m^3 (\$0.71/1000 gal) and \$78,600 capital for extraction. The operating costs are comparable, but the capital investment for extraction is nearly double that for stripping. A vacuum-steam-stripping process would probably be even cheaper than the atmospheric-pressure stripper. In any case, some kind of stripping process would almost certainly be selected for recovery of butyl acetate, and these relative costs are typical of the results for many organic pollutants. While it is dangerous to generalize, it seems likely that stripping will continue to be the dominant recovery method for organic pollutants.

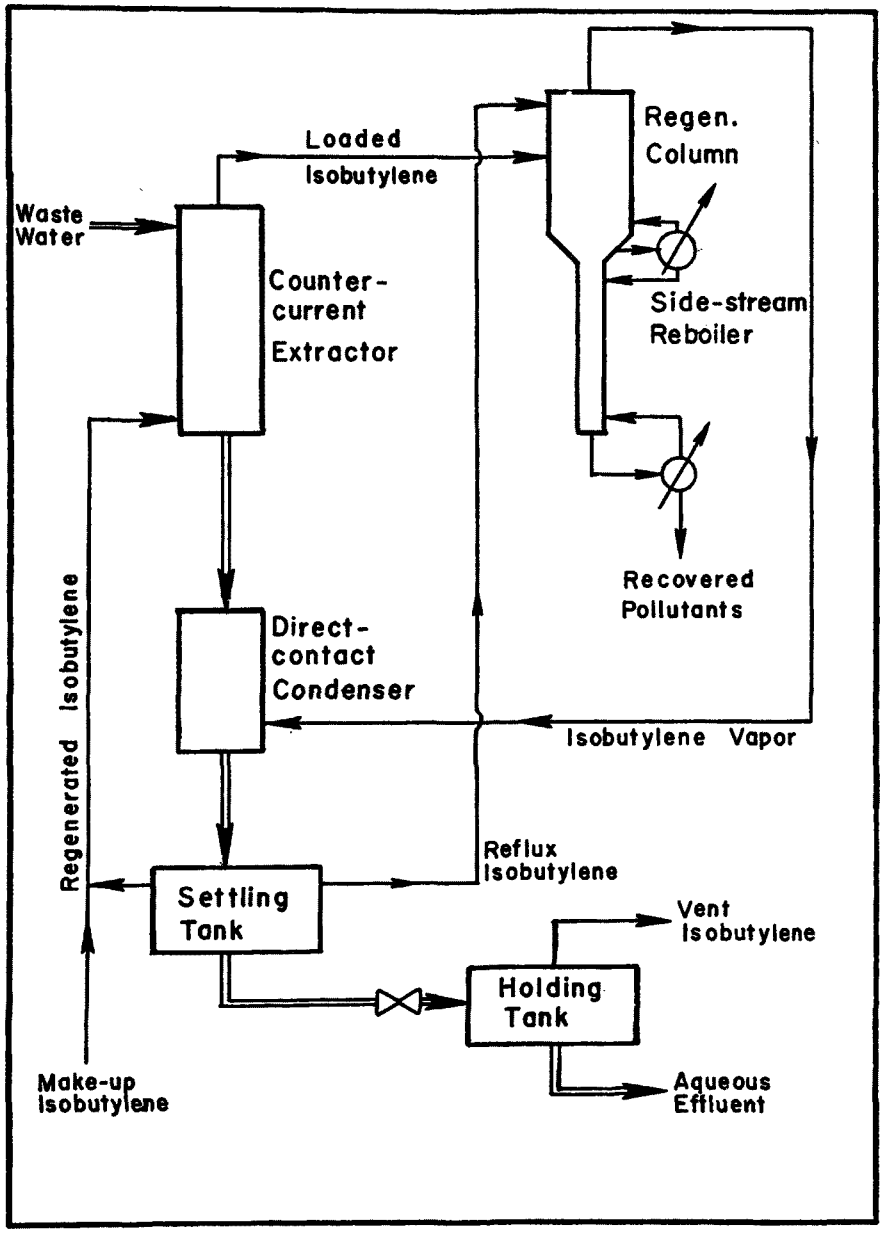

Figure 3. Volatile-solvent extraction process.

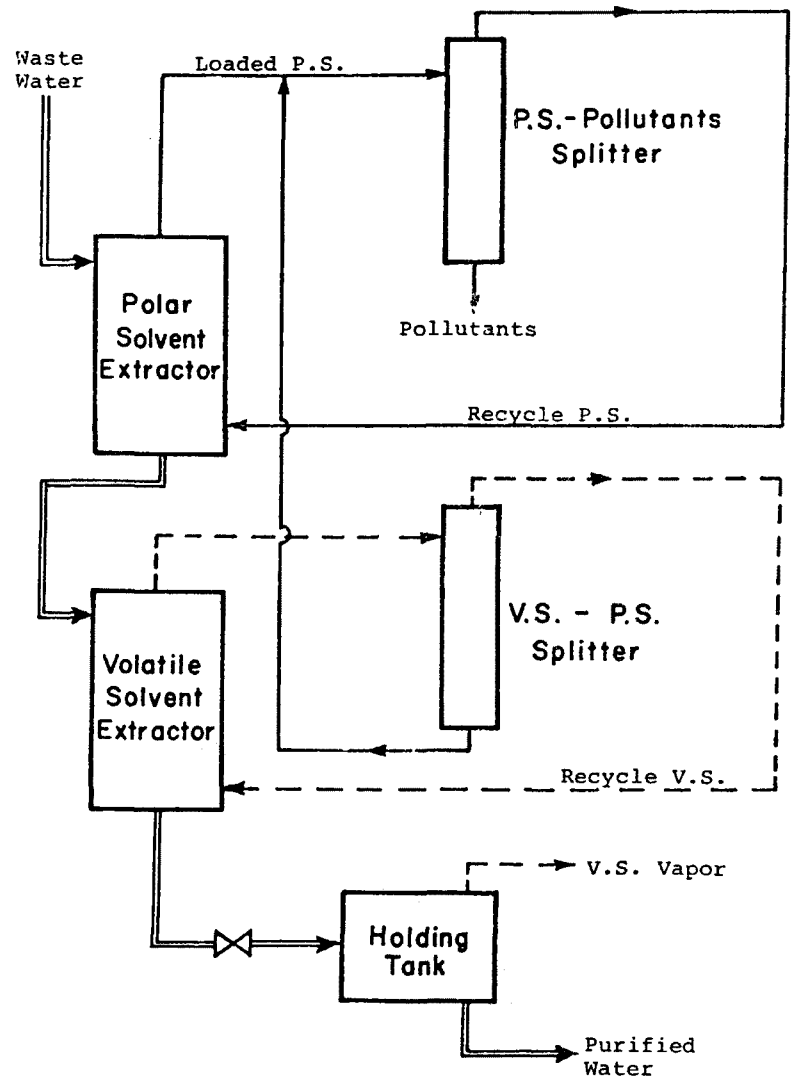

Figure 4. Dual-solvent extraction process.

However, there is a significant number of organic pollutants for which stripping is not attractive. Phenol, for example, forms a homogeneous azeotrope with water at only 9.2 wt. % phenol, so a simple stripping process cannot recover pure phenol from a dilute, i.e., below 9.2 wt. %, wastewater. The Phenolsolvan process, on the other hand, is viable because its extraction step circumvents the azeotrope, and the added phenol-DIPE and DIPE-water separations are not difficult.

Other potentially attractive applications for extraction exist when a pollutant (in aqueous solution or as dispersed droplets) is less volatile than water, or when the separation factor for stripping is close to 1.0. Energy and capital requirements for stripping are prohibitively large in such cases, and if a good extractant can be found, extraction should be favored.

GENERAL CHARACTERISTICS OF WASTEWATERS FROM ACETIC-ACID MANUFACTURE

The wastewaters studied in this work were from the manufacture of acetic acid by two different processes. One of these is the liquid-phase oxidation of n-butane, which accounted for 50% of U.S. production in 1974 (Lowry and Aguilo, 1974). The other is a two-step process--the oxidation of ethylene to acetaldehyde (Wacker process), followed by the oxidation of acetaldehyde to acetic acid--that accounted for another 35% of U.S. acetic-acid production. The carbon monoxide/methanol process has a smaller percentage of the market but appears to be the process of the future; however, wastewater samples were not available.

Samples representative of each process wastewater, including both steps of the ethylene-oxidation route, were obtained and analyzed by gas chromatography. The results showed that these wastewaters contain at least five organic chemicals for which recovery by extraction should be favored over stripping. One is acetic acid, which appears in concentrations of less than 1000 ppm to over 5 wt. %, depending on the water source. At concentrations of approximately 1 wt. % and greater, the chemical value of the acetic acid is high enough to encourage recovery of the acid. Since acetic acid is less volatile than water and the acid-water relative volatility is close to 1.0, acetic-acid recovery by a simple distillation-type process is very costly, especially at concentrations below 2 wt. % (Eaglesfield, et al., 1953; Brown, 1963). Fixed-bed, anion exchange has been suggested for dilute solutions but has several drawbacks.
In industry, the separation is now usually

accomplished by extraction or by extractive distillation (Brown, 1963). However, industrial extraction processes have been designed mainly for recovery from high-concentration aqueous solution, i.e., greater than 5 wt. % acetic acid. A major goal of the present work has been the development of a process that is economical at the lower concentrations found in wastewaters.

Other chemicals of interest are mono-, di-, and trichloroacetaldehyde (chloral) and crotonaldehyde. These are present in the Wacker-process wastewaters at concentrations up to about 8,000 ppm. The market for these chemicals is probably not large enough to justify recovery. However, chlorinated organics are potential carcinogens and are difficult to degrade biologically (Nathan, 1978), and crotonaldehyde is a notorious poison to biological oxidation. There is an incentive to develop alternative treatment processes, such as extraction, to remove such chemicals from water.

The chlorinated acetaldehydes form stable hydrates in aqueous solution (Miller, 1969) so they are difficult to recover by stripping. Extraction is more promising. Earhart, et al. (1977), for example, report K_D values of 50-120 for extraction of chloral by 2-ethylhexanol. Crotonaldehyde can be removed by stripping, but it could also be co-extracted with the chlorinated acetaldehydes with little, if any, additional cost. Thus, another major goal of the present work has been to develop an extraction process to remove chlorinated acetaldehydes and chloral from the Wacker-process wastewaters.

SECTION 2

CONCLUSIONS AND RECOMMENDATIONS

Several wastewater streams from acetic-acid manufacturing plants contain sufficient acetic acid to make recovery attractive. The principal role of solvent extraction appears to be for recovery, rather than for broad-brush reduction of COD and biochemical oxygen demand (BOD), or for removal of toxic components.

Projected costs for recovery of acetic acid by extraction are about $\$4/m^3$ of water for use of ethyl acetate as solvent and $\$2.50/m^3$ for use of cyclohexanone as solvent. Organic bases are attractive alternatives to these physically interacting solvents. The projected cost for a solvent composed of 40% trioctyl phosphine oxide (TOPO) in 2-heptanone is about $\$2.80/m^3$ of water, while that for 50% Alamine 336 (C_8-C_{10} tertiary amine) in diisobutyl ketone (DIBK) is about $\$2.00/m^3$ of water.

The organic bases provide higher equilibrium distribution coefficients (K_D) than the physically interacting solvents, with K_D being a maximum at some intermediate composition of the organic base extractant in a diluent. The K_D values are highly sensitive to the diluent employed in the amine systems. Alcohols provide the best K_D values, but were found to react with extracted acid through esterification during regeneration by distillation. Ketones were therefore selected. A C_9 ketone appears to offer the best compromise between high K_D and a volatility sufficiently below that of acetic acid during solvent regeneration.

Tertiary amine solvent systems should also be attractive for acetic acid/water separations at higher feed concentrations.

Secondary amine systems give higher values of K_D than the tertiary amines, but there is solvent loss from amide formation during regeneration. The tertiary amines cannot form amides. Primary amines are too miscible with water to be effective.

Wacker process effluent waters contain chlorinated acetaldehydes, which are corrosive, toxic and generally difficult to handle. It appears that these chlorinated acetaldehydes react irreversibly with amine solvents, making extraction with amines unsuitable for these waters unless the chlorinated acetaldehydes are somehow removed first. Such waters are often disposed of by deep-well injection or even incineration, at present.

Important questions for further exploration include (1) the longevity of amine solvents under sustained usage, (2) the reactivity of TOPO with chlorinated aldehydes, (3) ways of overcoming entrainment problems with amine solvents and/or TOPO, (4) the need for continual purge and possible reprocessing of a fraction of the solvent system to prevent build-up of heavy tars, and (5) the use of additives to increase K_D in the Alamine 336/DIBK system at low acetic acid concentrations.

SECTION 3

QUANTITATIVE ANALYSIS OF WASTEWATERS FROM THE MANUFACTURE OF ACETIC ACID

Several large acetic-acid manufacturers provided a total of eight, 55-gal (0.21-m^3) wastewater samples. The process source of each wastewater sample, designated A to H, is given in Table 1. The samples represent wastewaters from two major processes for the manufacture of acetic acid. The samples are from six different plants; samples B and G are from different parts of the same plant, and samples D and H are from different parts of another plant.

In the initial stages of the project, the samples were stored in a room maintained at about 4°C to reduce the likelihood of degradation. Small portions of the samples were also kept at ambient temperature in glass containers. Repeated analysis over a period of several months showed that the ambient-temperature samples were as stable as the 4°C samples. However, the ester content decreased significantly in both the chilled and the ambient samples (Wardell, 1976). The mechanism is apparently a slow hydrolysis to the corresponding alcohol and carboxylic acid

$$\text{ester} + \text{water} \rightarrow \text{carboxylic acid} + \text{alcohol}$$

occurring over a period of about one month. This is an equilibrium reaction; equilibrium constants are given by Groggins (1958) and are on the order of 4.0 for n-acetates. Hydrolysis of the esters is thermodynamically favored when the ester is dilute and when the alcohol and/or acid concentrations are small. The esters are completely hydrolyzed in certain samples (A,B) and partially hydrolyzed in the more concentrated samples (D,H).

The ester contents of the wastewaters were small, and esters are relatively easy to extract; the observed changes in concentration do not alter the essential characteristics of the wastewaters. The concentration of acetic acid, which was usually the primary solute in each sample, did not appear to change once the esters had hydrolyzed completely. Reported compositions are the final stable values.

TABLE 1. SOURCES OF WASTEWATER SAMPLES

Sample designation	Process	Plant code number
A	butane-oxidation	1
B	butane-oxidation	2
C	acetaldehyde-oxidation	3
D	acetaldehyde-oxidation	4
E	ethylene-oxidation (Wacker)	5
F	ethylene-oxidation (Wacker)	6
G	butane-oxidation	2
H	acetaldehyde-oxidation	4

Note: Ethylene-oxidation followed by acetaldehyde-oxidation is a two-step method for manufacture of acetic acid.

METHODS OF WASTEWATER ANALYSIS

Three methods were used for wastewater analysis: gas chromatography (GC), acid-base titration, and COD measurements. The analytical techniques are summarized here; detailed discussions have been previously reported. (Wardell, 1976; Michaels, 1977; Wardell and King, 1978; Pittman, 1979).

The GC analyses employed a Varian Model 600-D flame-ionization chromatograph equipped with 3.175 millimeter outer diameter (mm OD), stainless steel columns. Poropak Q, QS, and T column packings were used for wastewater analysis since these greatly reduce the peak tailing that often occurs in GC analysis of aqueous samples.

The wastewater samples were first analyzed qualitatively to determine the identities of the wastewater components. Their relative retention times on chromatographic columns of differing polarity (Poropak Q vs Poropak T), indicated the class (carboxylic acid, alcohol, ketone) of each compound in the sample (Wardell, 1976). The retention times also indicated the position of the compound within the homologous series for its class. To confirm the identity of a peak in the chromatogram, a small amount of the pure, suspect compound was added to the sample. If this resulted in an increase in the size of the appropriate peak, confirmation was assumed.

This is not a completely fool-proof identification method, since different compounds can have the same retention times on a given chromatographic column. However, the chances of two compounds having the same retention times on both the Q and T columns are very small, especially for the low-molecular-weight compounds found in these wastewaters. One sample (G) was analyzed by GC and then by GC-mass spectrophotometry, performed by Dr. A. Newton of the Lawrence Berkeley Laboratory. The mass spectrometer is accepted as a positive identification method, and it confirmed the identifications hypothesized in the original GC analysis. It also identified acetonitrile, which had previously been an unknown peak in the chromatogram for sample G.

The GC was also the primary method used for quantitative analysis, as described by Wardell (1976) and Michaels (1977). A two-meter, Poropak Q column operating at approximately 150°C provided adequate peak-resolution in most cases. Samples were injected manually into a heated injector port. The sample size was typically 3-5microliters (μL) for dilute samples, e.g., sample C, and 0.5 μL for the more concentrated samples.

Several standard analytical methods for the determination of solute concentrations by GC were tested throughout the course of this work. The internal-standard method seemed to give the best results. The sample to be injected is first spiked with a measured amount of a standard compound, which is chosen such that it does not interfere with any of the solute peaks. Methyl ethyl ketone (MEK) or 2-pentanol were usually used as internal standards. The sample is injected, and the solute peak areas, measured by mechanical integration, are compared to the area of the standard peak. The weight fraction of each solute can then be calculated directly from these relative peak areas and known relative response factors for the flame ionization (FI) detector (Bonelli and McNair, 1968). This method does not require accurate injection volumes, as does the external-standard method.

Samples were usually injected at least three times in succession. Reproducibility was typically ±3%, except for solutes present at less than about 100 ppm and for the one-carbon oxygenated organics (formic acid, formaldehyde, methanol) which respond poorly to the FI detection system. The estimated accuracy of the GC measurements is indicated for each sample in Tables 2-9.

COD measurements were performed by oxidation of organic and inorganic solutes with potassium dichromate in a 50% (by volume) sulfuric acid solution (EPA, 1971). At least two COD measurements were made for each wastewater sample. Reproducibility within 10% was considered to be acceptable.

A theoretical oxygen demand (TOD) was calculated from the GC analysis as the amount of oxygen required to oxidize the identified solutes completely to carbon dioxide, water, chlorine and nitrogen dioxide. TOD and COD values were then compared. Reasonable agreement was taken to indicate that the GC analysis had correctly quantified all major pollutants. The COD method does not oxidize some organic solutes completely, so the ratio of COD to TOD was expected to be less than 1.0 in most cases. The results are shown in Tables 2-9.

Potentiometric titrations were used to determined the total acid equivalent of each sample. The titrant was a strong base, NaOH or potassium hydroxide (KOH), and the titration curve was determined with a Corning Model 12 pH meter equipped with standard pH and reference electrodes. Curves contained a single, sharp inflection at about pH 5-8. No strong mineral acids were detected. The inflection was assumed to be due to the combined quantities of carboxylic acids in the

TABLE 2. COMPOSITION OF WASTEWATER SAMPLE A*

Compound	Concentration (ppm)	Est. uncertainty (ppm)	TOD (ppm)
Carboxylic Acids			
formic	920	40	320
acetic	805	25	860
propionic	75	5	115
Alcohols			
methanol	90	5	135
ethanol	560	15	1165
i-propanol	180	5	430
n-propanol	100	5	240
2-butanol	310	10	805
1-butanol	30	4	80
Ketones			
acetone	25	4	55
methyl ethyl ketone	320	10	780
Aldehydes			
i-butyraldehyde	55	4	130
Unidentified	50	-	125
Total	3520		5240

Measured COD: 5780 ppm

COD/TOD: 1.10

* Source: butane-oxidation, plant number 1

TABLE 3. COMPOSITION OF WASTEWATER SAMPLE B*

Compound	Concentration (ppm)	Est. uncertainty (ppm)	TOD (ppm)
Carboxylic Acids			
formic	1340	50	465
acetic	385	10	410
Alcohols			
methanol	1600	20	2395
ethanol	350	10	730
Ketones			
acetone	125	5	275
methyl ethyl ketone	490	15	1195
Aldehydes			
formaldehyde	2700	300	2875
Unidentified	220	-	550
Total	7390		8895

Measured COD: 8800

COD/TOD: 0.99

* Source: butane-oxidation, plant number 2

TABLE 4. COMPOSITION OF WASTEWATER SAMPLE C*

Compound	Concentration (ppm)	Est. uncertainty (ppm)	TOD (ppm)
Carboxylic Acids			
formic	175	15	60
acetic	30	5	30
Alcohols			
ethanol	110	5	230
propanol	150	5	360
Aldehydes			
formaldehyde	370	40	395
Total	835	-	1075
Measured COD: 1055			
COD/TOD: 0.98			

* Source: acetaldehyde-oxidation, plant number 3

TABLE 5. COMPOSITION OF WASTEWATER SAMPLE D*

Compound	Concentration (ppm)	Est. uncertainty (ppm)	TOD (ppm)
Carboxylic Acids			
formic	89400	3600	31100
acetic	177100	3400	188800
propionic	1200		1815
Alcohols			
methanol	27000	500	40400
ethanol	2600	40	5420
propanol	910	10	2180
Ketones			
acetone	660	10	1455
Aldehydes			
formaldehyde	13000	1300	13900
acetaldehyde	45000	450	81700
chloroacetaldehyde	31000	500	28400
chloral	290	5	110
crotonaldehyde	3100	60	7085
Esters			
methyl formate	6500	100	6930
methyl acetate	26000	260	39300
Unidentified	1350	–	3375
Total	424900		452000

Measured COD: 413300

COD/TOD: 0.91

* Source: acetaldehyde-oxidation, plant number 4

TABLE 6. COMPOSITION OF WASTEWATER SAMPLE E*

Compound	Concentration (ppm)	Est. uncertainty (ppm)	TOD (ppm)
Carboxylic Acids			
formic	1510	150	525
acetic	7560	120	8155
Aldehydes			
monochloroacetaldehyde	140	5	130
dichloroacetaldehyde	4900	75	2775
chloral	1400	30	530
crotonaldehyde	220	10	500
Unidentified	40	-	100
Total	15900		12700

Measured COD (ppm): 12100

COD/TOD: 0.95

* Source: ethylene-oxidation, plant number 5

TABLE 7. COMPOSITION OF WASTEWATER SAMPLE F*

Compound	Concentration (ppm)	Est. uncertainty (ppm)	TOD (ppm)
Carboxylic Acids			
formic	3180	350	1110
acetic	15500	300	16500
Alcohols			
methanol	55	4	80
ethanol	190	5	395
Aldehydes			
formaldehyde	200	20	215
acetaldehyde	95	5	175
chloroacetaldehyde	6300	80	5775
dichloroacetaldehyde	7200	100	4075
chloral	140	5	55
crotonaldehyde	330	8	755
Unidentified	150	-	375
Total	32800		29500

Measured COD (ppm): 25600

COD/TOD: 0.91

* Source: ethylene oxidation, plant number 6

TABLE 8. COMPOSITION OF WASTEWATER SAMPLE G*

Compound	Concentration (ppm)	Est. uncertainty (ppm)	TOD (ppm)
Carboxylic Acids			
formic	3760	2550	1310
acetic	49360	2470	52500
Alcohols			
methanol	411	8	597
ethanol	502	27	1050
2-butanol	459	12	1190
1-butanol	411	14	1060
Aldehydes			
acetaldehyde	231	7	419
Ketones			
acetone	1620	40	3570
methyl ethyl ketone + n-propanol	389	23	950
Miscellaneous			
benzene + unknown	242	20	
acetonitrile	747	20	
Total	58130		63600

Measured COD (ppm): 57000

COD/TOD: 1.10

* Source: butane-oxidation, plant number 2

TABLE 9. COMPOSITION OF WASTEWATER SAMPLE H*

Compound	Concentration (ppm)	Est. uncertainty (ppm)	TOD (ppm)
Carboxylic Acids			
formic	3760(?)	2550	1310
acetic	66300	4600	70675
Alcohols			
methanol	1890	28	2831
ethanol	30	1	62
n-propanol	45	2	108
Aldehydes			
formaldehyde	13800	524	14711
acetaldehyde	7660	76	13910
Ketones			
acetone	90	5	198
Esters			
methyl formate	7	1	7
methyl acetate	4390	344	6638
ethyl acetate	65	3	118
Total	94280		109260

Measured COD (ppm): 83300

COD/TOD: 0.75

* Source: acetaldehyde-oxidation, plant number 4

sample. The pK values of these acids are too similar to allow separate inflections. pK_a values for formic, acetic, and propionic acids are 3.75, 4.76, and 4.87, respectively (Daniels and Alberty, 1966).

The concentrations of acetic and higher carboxylic acids were also determined by GC. The GC measurements predicted slightly lower acidities than those measured by titration. The differences were attributed to formic acid, which could not be measured with precision by GC due to its very poor detector response.

WASTEWATER COMPOSITIONS

The results of wasterwater analyses are given in Tables 2-9. Samples A-F were analyzed by Wardell (1976) and samples G and H were analyzed by Pittman (1979). Sample H is notable for its poor COD/TOD agreement. The COD measurements procedure consistently gave very low values. The reason for the poor agreement was not found, although several hypotheses were investigated. In any case, the GC analysis is conservative.

SECTION 4

GENERAL PROCESS-DESIGN STRATEGY

Once the sample wastewater compositions were measured, it was possible to judge whether a given wastewater was a likely candidate for treatment by extraction. A sample was considered promising if (1) it contained a marketable chemical that could be extracted for profit, (2) it contained an environmentally hazardous chemical that could not obviously be removed more cheaply by other treatment methods, such as biological oxidation or adsorption on activated carbon, or (3) extraction could substantially reduce the total organic content of the wastewater, thereby decreasing the loading on downstream treatment facilities.

EXTRACTION FOR PROFIT

The possible economic incentives for extraction treatment were examined in two steps. First, the potential recovery value of each wastewater component was calculated from its concentration and current market value as a technical-grade chemical. The results are given in Table 10, with the potential recovery value given in terms of $\$/m^3$ wastewater. A value of zero indicates a chemical for which there is no established market.

According to Earhart, et al. (1977), recovery of a wastewater constitutent is economically promising if its potential recovery value is $\$0.80/m^3$, or more. Samples A-C are thus poor prospects. With the exception of sample D, the only chemicals with economic recovery potential are the acetic acid in samples E-H and the formaldehyde and acetaldehyde in sample H. The formic acid in samples F and G is marginal. Sample D was eventually found by the supplier to have been collected incorrectly, and it was eliminated from further consideration. Sample H was subsequently received as a replacement.

Formic and acetic acids and formaldehyde and acetaldehyde are much more difficult to extract from water than the solutes considered by Earhart, et al. Because of this and because of recent increases in energy

TABLE 10. CHEMICAL VALUE OF WASTEWATER CONSTITUENTS

	Market value* (¢/kg)	Recovery value ($/m^3) A	B	C	D	E	F	G	H
Acids									
formic	47	0.43	0.63	0.08	41.90	0.71	1.49	1.76	
acetic	40	0.32	0.15	0.01	70.31	3.04	6.15	19.60	26.32
propionic	45	0.03			0.54				
Alcohols									
methyl	14	0.01	0.23		3.87		0.01	0.06	0.27
ethyl	36	0.20	0.13	0.04	0.95		0.07	0.18	0.01
i-propyl	32	0.06							
n-propyl	59	0.06		0.09	0.54				0.03
2-butanol	51	0.16						0.23	
1-butanol	46	0.02						0.19	
Aldehydes									
formaldehyde	32		0.86	0.12	4.16		0.06		4.41
acetaldehyde	44				19.85		0.04	0.10	3.38

(continued)

TABLE 10. (continued)

	Market value* (¢/kg)	Recovery value ($/m^3) A	B	C	D	E	F	G	H
monochloroacetaldehyde	-				0	0	0		
dichloroacetaldehyde	-				0	0	0		
chloral	-				0	0	0		
crotonaldehyde	-				0	0	0		
i-butyraldehyde	54	0.03							
Ketones									
acetone	40	0.01	0.05		0.26			0.64	0.04
methyl ethyl ketone	46	0.15	0.23					0.18	
Esters									
methyl formate	62				4.02				0.01
methyl acetate	62				16.06				2.69
butyl acetate	64								
ethyl acetate	53								0.03

(continued)

TABLE 10. (continued)

	Market value* (¢/kg)	Recovery value ($/m^3) A	B	C	D	E	F	G	H
Miscellaneous									
benzene	29							0.07	
acetonitrile	88							0.66	

* Chemical Marketing Reporter, 213(21), 1978

and equipment costs, it was felt that the recovery value of the acids and aldehydes would have to be substantially higher than $0.80/m^3 for recovery to be economically promising.

A subsequent cost estimate for the recovery of acetic acid by extraction with ethyl acetate, a solvent used industrially for this purpose (Brown, 1963; Eaglesfield, et al., 1953), indicated that the capital investment for a 22.7 m^3/hr (100 GPM) capacity would probably be about $1.7 million, with an operating cost of $4.08/m^3 wastewater. The operating cost does not include a credit for recovered acetic acid. These costs were used to estimate the return on investment before taxes ROIBT of an extraction process recovering 99% of the acetic acid from wastewaters E-H. The results are shown in Table 11.

TABLE 11. ESTIMATED ROIBT FOR RECOVERY OF ACETIC ACID FROM SAMPLES E-H.

Wastewater sample	Value of acetic acid ($/m^3)	ROIBT (%)
E	3.04	- 11.0
F	6.15	22.1
G	19.60	165.8
H	26.32	238.0

Most companies would require an ROIBT of at least 30% to justify such a project on a purely economic basis. Samples E and F are thus not particularly attractive by these standards, but recovery from samples G and H would seem justifiable whether or not extraction would provide other benefits. Furthermore, identification of a more attractive solvent could still make recovery of acetic acid from wastewaters E and F attractive.

ROIBT calculations also indicated that selective extraction of acetaldehyde and formaldehyde from sample H would probably not be economical. Formaldehyde is particularly difficult to extract. However, co-extraction of acetic acid and acetaldehyde from sample H is attractive, since these solutes are easy to separate from one another. The acetaldehyde could be recycled to make additional acetic acid.

One might also consider co-extraction of formic acid and acetic acid in sample G. However, while a significant

amount of formic acid is produced in the butane-oxidation process, on the order of 10% of the acetic acid production rate (Lowery and Aguilo, 1974), formic acid does not appear to be a desirable by-product. For example, in one process, quite pure formic acid is burned rather than marketed (Anon, 1973). The market for formic acid is apparently much more limited than that for acetic acid (Lawler, 1977).

Finally, although it was not possible to determine a market price for chlorinated acetaldehydes, several authors have pointed out that recovery of chloroacetaldehyde from the Wacker process is potentially attractive (Lowry and Aguilo, 1974; Miller, 1969b). This very reactive chemical can be used for production of insecticides, fungicides, etc. (Miller, 1969a). The next section considers this option in more detail.

EXTRACTION FOR REMOVAL OF HAZARDOUS CHEMICALS

Each wastewater sample was also examined for chemicals that might be unsuitable for release to the environment due to toxicity, carcinogenicity or non-biodegradability. Samples A, B, C, G, and H contain no such chemicals. Samples E and F, however, contain mono-, di- and tri-chloroacetaldehyde (chloral) and crotonaldehyde. The organic chlorides are potential carcinogens and are difficult to degrade biologically (Nathan, 1978). Crotonaldehyde is known to upset biological treatment facilities. The chlorinated acetaldehydes form hydrates with water and are difficult to strip from aqueous solution. Activated-carbon adsorption would probably be expensive due to the high solute concentrations.

A possible treatment strategy would be to extract acetic acid, chlorinated acetaldehydes and crotonaldehyde simultaneously. Acetic acid is generally more difficult to extract than the other solutes, and costs for simultaneous extraction should be comparable to those for simple acetic-acid extraction. As noted previously, chloroacetaldehyde may be marketable. Even if it is not, the acetic acid could be purified and sold or reused to offset the treatment costs.

A problem with the simultaneous extraction approach is that the extremely reactive chloroacetaldehyde solute reacts irreversibly with amines (Michaels, 1977), which appear to be the most attractive extractants for acetic-acid recovery. The reaction is an alkylation to a quaternary salt. For example, for the reaction of

chloroacetaldehyde and a tertiary amine is:

$$ClCH_2CHO + R_3N \longrightarrow (R_3N\text{-}CH_2CHO)^+Cl^-$$

Another approach is then to extract the chlorinated acetaldehydes selectively, followed by recovery of the acetic acid with another solvent, e.g., an amine. This also may avoid some or all of the need for subsequent separation of the extracted chemicals, since the two solvents would be regenerated separately. Treatment options for the Wacker-process wastewaters are developed more fully in a subsequent section.

EXTRACTION FOR WASTE COD REDUCTION

Finally, extraction was considered as a means to reduce the organic loading in the wastewaters substantially, i.e., a COD reduction to approximately 100 ppm. Due to the presence of low-molecular-weight, oxygenated organics, which are difficult to extract, this degree of COD reduction would be very expensive to accomplish by extraction. COD reduction alone did not appear to be sufficient justification for treatment of any of the sample wastewaters by extraction. However, some COD reduction could be accomplished within other treatment strategies, such as recovery of acetic acid for profit.

SUMMARY OF TREATMENT STRATEGY--GOALS FOR THE EXTRACTION PROCESS

In the final treatment strategy, samples A, B, and C were termed poor candidates for treatment by extraction. Sample D was not considered for reasons mentioned previously. However, co-extraction of the chlorinated acetaldehydes, crotonaldehyde, and acetic acid from the Wacker-process wastewaters (E and F) seemed worthwhile, and samples G and H contained enough chemical value (mainly acetic acid) to make extraction potentially profitable. An additional benefit would be a large reduction in COD for these wastewaters. Biological treatment could then remove the remaining chemicals; however, that aspect of the treatment strategy was not studied.

SECTION 5

SOLVENTS FOR EXTRACTION OF ACETIC ACID AND CHLORINATED ACETALDEHYDES

The treatment strategy outlined in the previous chapter identified acetic acid and chlorinated acetaldehydes as the prime candidates for recovery by extraction. The search for effective extractants for these solutes was thus a critical aspect of this work.

DESIRABLE SOLVENT PROPERTIES

To be effective, a solvent should:

1. exhibit a large distribution coefficient, K_D, for the solute(s) to be recovered;
2. not participate in irreversible reactions with any of the wastewater components;
3. be easy to separate from the solutes after extraction so that the solvent can be re-used;
4. have a low mutual solubility with water so as to reduce the solvent loading in the aqueous raffinate, which might otherwise result in costly solvent losses, and to reduce the amount of water carried to the regeneration step;
5. have a low K_D for solutes that are not to be recovered, i.e., selectivity, to simplify purification of the desired solutes;
6. have a density, viscosity, and interfacial tension against water such that the extractor operates effectively and the phases separate easily; and
7. be inexpensive, commercially available, non-toxic, and biodegradable.

Ideally, the solvent selected would have an optimum combination of the above properties, resulting in the lowest-cost process. However, a quantitative optimization of all solvent properties is a very difficult and time-consuming procedure, since many process-design alternatives must be considered for each solvent. Consequently, the solvent-selection strategy used here was to identify a group of solvents, based on qualitative use of the above guidelines, that appeared to have the most promise as extractants for acetic acid. Process

cost calculations and small-scale experiments were then used to evaluate those solvents in detail.

The K_D value for extraction of acetic acid was a primary consideration in the selection procedure. A high recovery of the solute to be extracted is only possible when the extraction factor ($E = K_D F_s/F_w$, where F_s and F_w are the mass flowrates of the solvent and water phases) is greater than 1.0. If K_D is small, F_s must be large; equipment size and energy costs are usually prohibitive in such cases.

As noted by Earhart, et al. (1977), higher K_D values have a strong, favorable effect on the process economics up to a value of about 20.0. Higher K_D values are useful, but do not reduce costs significantly. For extraction of acetic acid, the K_D value is seldom much greater than 1.0. For many common solvents, it is less than 0.1; such solvents were immediately dropped from consideration, and attention was concentrated on the much smaller group of solvents giving K_D values on the order of 1.0, or greater. Basically, these solvents fall into either of two categories--those having a relatively weak "physical" attraction for acetic acid, e.g., a hydrogen bonding capability, and those having a stronger, specific "chemical" attraction, e.g., strongly basic properties.

WEAKLY-INTERACTING ACETIC-ACID EXTRACTANTS

The physical class of solvents is the larger, by far, and has received more attention in the past (Eaglesfield, et al., 1953; Brown, 1963; Othmer, et al, 1941). Examples are alcohols, ketone, esters, and ethers. Won (1974) recently compiled K_D data for acetic acid and other aliphatic carboxylic acids between water and various weakly-interacting solvents. He shows that in highly-dilute acetic-acid solutions, the ranges for the distribution coefficient, K_D, are 0.63 to 0.14 for C_4 to C_8 ethers, 0.89 to 0.17 for C_4 to C_{10} acetates, 1.20 to 0.61 for C_4 to C_6 ketones, and 1.68 to 0.64 for C_4 to C_8 alcohols. Within a given molecular-weight range, K_D increases in the following order: ether < ester < ketone < alcohol. Cyclic alcohols and ketones have higher distribution coefficients than their straight-chain counterparts. For example, the K_D for MIBK, a C_6 ketone, is about 0.60, while that for cyclohexanone is about 1.3. Hydrocarbons and aromatics are generally much poorer extractants.

Eaglesfield, et al. (1953) give an extensive review of weakly-interacting solvents and recommend specific solvents for use as acetic acid extractants. The investigators argue

against the use of alcohols, even though these have high distribution coefficients, because they can esterify with acetic acid. Potential esterification is indeed a serious drawback for alcohols, as is reported elsewhere (Ricker, 1978) from the present work. The investigators recommend ethyl acetate, with cyclohexanone and methyl cyclohexanone as alternatives.

However, the extraction of acetic acid with these solvents is not economically attractive if the concentration of acid in the aqueous feed is less than about 2.0 wt. % (Brown, 1963; Helsel, 1977). The main reason is the relatively low K_D; there is a strong incentive to find and develop solvents giving K_D values higher than those typical of the weakly-interacting extractants.

ORGANOPHOSPHORUS EXTRACTANTS

In his search for acetic acid extractants, Won (1974) noted that tri-butyl phosphate (TBP) gave a K_D of 2.84 for acetic acid at high dilution. Wardell (1976) inferred from considerations of chemical structure that related phosphorous compounds, notably the phosphine oxides, would give even higher K_D values, due to the increased polarity of the phosphorus-oxygen (P-O) bond. He then verified this hypothesis experimentally.

One of the most promising organophosphorus compounds studied by Wardell and King (1978), TOPO, was recently patented as a novel acetic acid extractant (Grinstead, 1974). Helsel (1977) and Kohn (1976) describe efforts by Hydroscience, Inc., to develop a TOPO-extractant process for large-scale acetic acid recovery, pointing out that the high K_D and other favorable solvent properties should result in large economic advantages over more conventional extractants when the aqueous acid-feed concentration is less than about 5.0 wt. %.

TOPO is a white, waxy solid that melts at about 56°C and boils at 460°C at atmospheric pressure. It is thermally and chemically stable and reportedly has a water-solubility of only 1 ppm (Helsel, 1977). It has a good selectivity for acidic compounds (Wardell and King, 1978). However, it must be dissolved in an organic solvent, or "diluent", before it can be used in an extraction process. It is quite soluble in many organic solvents, typically up to 50-60 wt. %.

The choice of a diluent is a complicating factor in the design of an extraction process using TOPO. Wardell inferred from his measurements that the diluent had only

a small effect on K_D, and thus could be chosen to enhance other solvent properties. However, in a subsequent study of three different diluents, Michaels (1977) found a significant variation in K_D values, with K_D increasing in the following order: 2-ethyl-1-hexanol < Chevron Solvent 25 (a solution consisting mainly of alkylated aromatics in the C_9 range) < 2-heptanone. The K_D value of 2.83 for TOPO in 2-heptanone was more than twice that with the alcohol diluent. The trend is not in order of diluent polarity or hydrogen-bonding ability, as is true for the amine extractants discussed in the next section.

Michaels hypothesized that the lower K_D for the alcohol diluent was due to competition between the alcohol and acetic acid; both are capable of hydrogen-bonding with the phosphoryl group. Neither 2-heptanone nor Chevron Solvent 25 can hydrogen bond with the phosphoryl. The more polar ketone appears to be a better extractant for the TOPO/acetic-acid complex, and thus gives a higher K_D value than Chevron Solvent 25.

The Hydroscience process uses a proprietary, aliphatic-hydrocarbon diluent (Kohn, 1976). The resulting extractant mixture is reported to provide a low water solubility, good phase-separation properties, and a high boiling point, which facilitates recovery of acetic acid by distillation.

The concentration of TOPO in the diluent also has an appreciable effect on K_D. Wardell and King (1978), for example, report a K_D variation from 0.30 to 3.5 for TOPO concentrations of 0.0 to 58.6 wt.% in a heptane/hexanol diluent, with a maximum K_D of 4.7 at 25.9 wt.% TOPO. The TOPO concentration is thus likely to be an important process-optimization parameter.

There are three basic disadvantages to the TOPO extractant system. First, TOPO is relatively expensive. Prices quoted by the two major U.S. producers, American Cyanamid and Eastman Organic Chemicals, vary from $15.42/kg to $44.05/kg, depending on purity and quantity desired (Helsel, 1976). A value of $22/kg was used in this work as a representative figure; prices could decrease if the TOPO market expands. Prices for the more common weakly-interacting extractants of the previous section average only $0.55/kg (Chem. Mark. Rep., 1978).

The cost of the solvent is an important consideration because there is always some loss of solvent in an industrial-scale extraction process. An example is

entrainment of dispersed droplets of solvent in the aqueous effluent from the extractor. This can be very costly, especially when large volumes of wastewater are to be processed. For extractants as expensive as TOPO, great pains must be taken to keep solvent make-up costs low.

The second disadvantage is its extremely high boiling point. Removal of any soluble, non-volatile substances from TOPO would be difficult to accomplish by distillation Such substances might be extracted from the wastewater, as in the Phenolsolvan process described in Section 1, or the substances might be the result of solvent degradation. Finally, TOPO has the potential for solidification in process lines, which mandates expensive steam-tracing or operation at a TOPO concentration well below its solubility limit in the chosen diluent.

Extensive development of a TOPO-extractant process did not seem to be appropriate to the present research. However, sufficient development and evaluation were done to allow a comparison between TOPO and alternative solvents. Wardell and King (1978) and Michaels (1977) measured K_D values for solutions of TOPO in batch extractions of prepared aqueous acetic acid solutions and wastewater samples, and Sanchez (1977) measured extraction efficiencies of a TOPO extractant in a continuous miniplant RDC extractor. These findings are discussed in later sections dealing with process design and cost comparisons for alternative solvents.

AMINE EXTRACTANTS

Amines are strong organic bases. Aliphatic amines are especially basic, more so than ammonia, for example (Morrison and Boyd, 1966b), and as a result the amines interact strongly with acidic solutes and can provide high K_D values.

The extraction mechanism is an acid-base neutralization. Acid in the aqueous phase transfers to the solvent phase, where it reacts reversibly with the amine. If the amine is sufficiently water-insoluble, the reaction product, or complex, stays almost entirely in the solvent phase:

$$[H^+A^-]_{aq} + [B]_{org} \rightleftharpoons (BHA)_{org}$$

(aqueous acid) (organic base) (organic-phase complex)

The complex is usually termed a salt or an ion pair (Schmidt, 1971).

In the extraction of acetic acid, the viscosity of the organic phase increases noticeably with increasing complex formation (Kohler, et al., 1972). For example, in one case studied in this work, the viscosity of the feed solvent to an extraction experiment was 2.12 milli Pascal seconds (mPa·s) at 30°C, while that of the extract phase was 3.04 mPa·s (Ricker, 1978). This suggests that the complex may self-associate in the organic phase.

Page and Smith (1948) appear to have first suggested extraction of acids as an application for amines. They demonstrated that even strong mineral acids could be completely removed from aqueous solution. In fact, K_D tended to increase with increasing acid strength.

More recently, amines have been suggested as extractants for large-scale recovery of specific acidic solutes. Examples are hydrofluoric acid recovery (Hardwick and Wace, 1965), pharmaceutical separations (Kunin, 1962), nitrate ion extraction (Coleman, et al., 1958), and phenol recovery (Pollio, et al. 1967). However, with the possible exception of the pharmaceutical applications, these suggestions have not been implemented by industry, probably because of the lack of a large enough economic incentive to justify the use of this untried technology in place of well-established methods.

The current major industrial application of such amines is in the selective extraction of valuable metallic and rare-earth ions from acidified aqueous solutions, as, for example, in the recovery of uranium from ore-leach liquors (Coleman, et al., 1958). The amine is used in the salt form as a liquid anion-exchanger. The general chemical-reaction representation of the extraction step is:

$$[R_3NHA]_{org} + [B^-]_{aq} \rightleftharpoons [R_3NHB]_{org} + [A^-]_{aq}$$

where R_3N represents the amine, in this case a tertiary amine, and A^- and B^- are anions. The extent to which B^- is transferred to the organic phase in exchange for A^- depends on the relative affinities of these anions for the amine, which can vary greatly.

Liquid ion-exchange can be considered to be the sum of two neutralization reactions, and neutralization equilibria can be used to predict ion-exchange behavior. A great deal of amine neutralization data are available (Scibona, et al., 1966; Kertes, 1965) but nearly all deal with strong mineral acids or complex metal ions and are not directly useful in the present research.

Very little has been published on the extraction of acetic acid by amines. Hogfeldt and Fredlund (1967) studied extraction of acetic acid by tri-lauryl amine, but their emphasis was on elucidation of the structure of the amine-acid salt, and their data are not useful for process design. More pertinent is the work of Sakai, et al. (1969), which gives extraction equilibria for acetic acid between aqueous solution and solutions of Amberlite LA-2 (a Rohm and Haas secondary amine) in several organic solvents. Additional measurements were made in the present work and are reported by Wardell and King (1978), and Michaels (1977), as well as later in this report. These measurements were made to obtain a clearer picture of the extraction behavior and to determine the best amine extractant system for an industrial-scale acetic-acid-recovery process.

LIQUID-LIQUID EQUILIBRIA FOR AMINE EXTRACTANTS

As for TOPO, amines are usually dissolved in an organic diluent to provide proper physical properties for extraction and better values of K_D. Amine extractants are viscous liquids when pure. Extraction behavior varies not only with the type of amine used, but with the type of diluent and its concentration in the solvent phase, as well.

Wardell and King (1978) measured K_D values for extraction of acetic acid from prepared aqueous solutions by tri-octyl amine (TOA) and tri-isooctyl amine. The type of diluent was shown to have a strong effect on K_D, with the more polar diluents providing the higher K_D values. The distribution coefficient was also a strong function of the amine concentration in the solvent. For TOA in chloroform, the combination that gave the highest K_D value measured, K_D varied from 0.028 to 0.94 as the TOA concentration increased from 0 to 100 wt.%, with a maximum K_D of 9.9 at 18.6 wt.% TOA. Sakai, et al. (1969) observed similar behavior, although their data are mainly for amine concentrations below 50 volume %.

Additional measurements were performed in this work to determine the effect of the type and structure of the amine and to obtain more information on the effects of diluent, amine concentration, and acid concentration. Commercially available primary, secondary, and tertiary amines were tested; a complete list is given in Table 12. The experimental technique is described elsewhere (Ricker, 1978).

The experimental extraction equilibria are summarized in Tables 13-16 and in Figures 5 and 6. More details are given elsewhere (Ricker, 1978). No results are given for the primary

TABLE 12. AMINES INVESTIGATED IN THIS WORK

Trade name	Class	Chemical make-up/structure	Manufacturer
Primine JMT	1°	highly-branched, 18-24 carbon atoms	Rohm & Haas
Amberlite LA-3	1°	branched-chain, ave. MWT=353	"
Adogen 283 D	1°	di-tridecyl amine, branched chains	Ashland Chem.
Amberlite LA-2	2°	highly-branched	Rohm & Haas
Amberlite LA-1	2°	"	"
Adogen 383	3°	tri-laurel, straight-chain	Ashland Chem.
" 364	3°	tri C_8 to C_{10} isomers, straight-chain	"
" 367 D	3°	di-methyl Coco amine	"
" 368	3°	tri C_8-C_{10}-C_{12} isomers, straight-chain	"
" 345 D	3°	di-methyl hydrogenated tallow amine	"
" 381	3°	tri-iso-octyl amine	"
methylated Adogen 283 D	3°	methyl di-tridecyl amine	*
Alamine 336	3°	tri C_8 and C_{10} straight-chain	General Mills

*synthesized from Adogen 283 D by Eschweiler-Clarke modification of Leukart Reaction (Moore, 1949)

TABLE 13. RESULTS FOR EXTRACTION OF ACETIC ACID BY TERTIARY AMINES SUPPLIED BY ASHLAND CHEMICAL COMPANY

Amine	Amine vol. %	Diluent	Equil. aqueous acetic acid wt.%	K_D
Adogen 381	20	2-heptanone	3.23	1.72
"	"	"	0.198	1.09
"	30	chloroform	0.0448	7.79
"	80	2-heptanone	2.98	2.87
Adogen 364	20	2-heptanone	2.90	1.98
"	"	"	0.145	1.62
"	30	chloroform	0.0381	9.69
"	80	2-heptanone	2.96	2.79
Adogen 368	20	"	3.11	1.83
"	"	"	0.145	1.58
"	30	chloroform	0.0447	8.28
"	80	2-heptanone	3.06	2.77
Adogen 363	20	"	3.44	1.58
"	"	"	0.145	1.58
"	30	chloroform	0.0623	7.82
"	80	2-heptanone	3.50	2.26

TABLE 14. REPRESENTATIVE RESULTS FOR EXTRACTION OF ACETIC ACID BY ALAMINE 336

Amine vol. %	Diluent	Equil. aqueous acetic acid wt.%	K_D
10	2-heptanone	3.01	1.48
20	"	2.99	2.24
50	"	1.07	2.50
75	"	0.98	1.68
75	"	2.77	3.29
30	chloroform	0.0465	9.68
"	"	0.648	5.60
"	"	2.98	1.87
"	"	4.79	1.39
20	octanol	0.664	3.73
"	decane	2.43	0.22
100	-	0.095	0.75
"	-	1.20	1.05
"	-	1.36	0.934
"	-	3.18	0.97

TABLE 15. EXTRACTION OF ACETIC ACID BY ASYMMETRIC TERTIARY AMINES

Amine	Amine vol. %	Diluent	Equil. aqueous acetic acid wt.T	K_D
methyl di-tridecyl	50	methyl iso-amyl ketone	0.988	1.77
"	"	"	2.11	2.58
"	"	"	2.91	3.54
Adogen 367 D	"	"	single phase	
Adogen 345 D	"	"	" "	

TABLE 16. EXTRACTION OF ACETIC ACID BY SEVERAL SECONDARY AMINES

Amine	Amine vol. %	Diluent	Equil. aqueous acetic acid wt.%	K_D
Amberlite LA-1	50	Chevron 25	1.16	1.27
"	"	"	3.78	2.26
"	30	chloroform	0.0469	4.48
"	100	none	2.25	4.22
Amberlite LA-2	50	Chevron 25	0.53	3.82
"	"	"	2.19	4.48
"	30	chloroform	0.0218	9.86
"	100	none	1.83	6.49
Adogen 283 D	50	Chevron 25	0.983	9.65
"	"	"	2.63	4.55
"	"	"	3.85	3.46
"	30	chloroform	0.0133	32.11
"	100	none	0.383	33.4

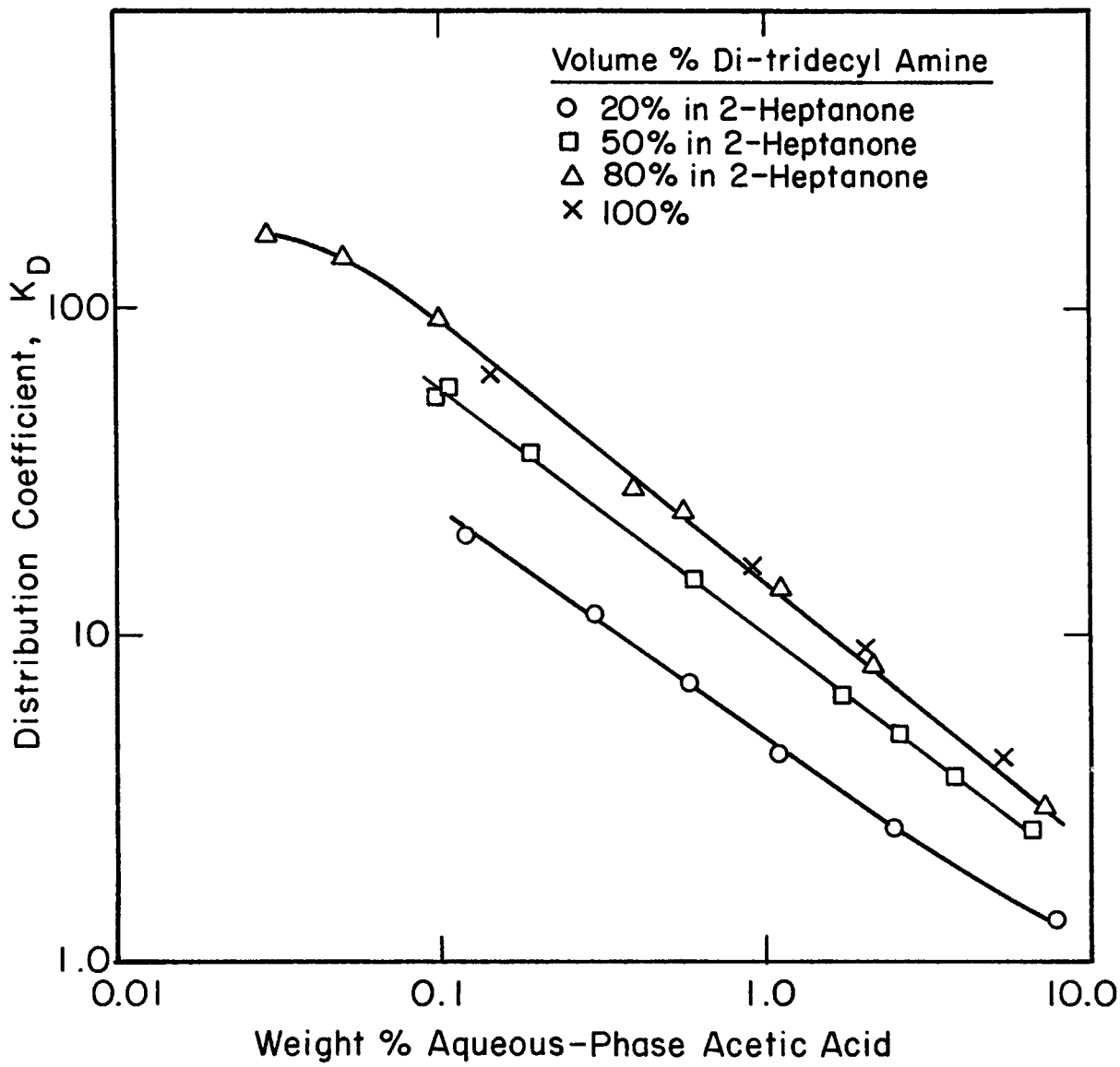

Figure 5. Extraction of acetic acid by di-tridecyl amine in various diluents.

amines because these co-extracted a large amount of water with the acetic acid. At high acid loadings, e.g., an aqueous feed of 10 wt.%, extraction resulted in a single liquid phase. The same behavior was observed for the asymmetric tertiary amines, Adogen 345D and Adogen 367D, which are essentially primary amines with methyl groups substituted for the hydrogens on the nitrogen (N) atom.

Secondary Amines

The symmetric secondary amines, Adogen 283 D, and Amberlite LA 1 and LA 2, gave the highest K_D values measured in this work (Table 15). Adogen 283 D, which is made up of two branched C_{13} chains attached to the N atom, appears to be the more powerful extractant for acetic acid, as shown by a comparison of the experimental results for identical extractions with the amines in a chloroform diluent and with the pure amines. Amberlite LA 2 is slightly more effective than LA 1. It is interesting to note that Adogen 283 D supplies fewer basic equivalents per weight of amine than Amberlite LA 1 or LA 2 (Ricker, 1978). Their relative strengths as extractants must be due, primarily, to structural effects. However, the structures are poorly characterized, and no structural comparisons are possible.

Selected results for Adogen 283 D are plotted in Figure 5 to show the strong effects of amine concentration and acetic acid concentration. K_D values of as high as 160 were measured under certain conditions. This is about two orders of magnitude higher than the K_D values for conventional solvents. The decrease in K_D with increasing acid concentration is characteristic of chemically-interacting extractants, and is discussed in detail in the next section. Figure 5 shows that pure Adogen 283 D is an effective extractant, in contrast to the behavior of the tertiary amines (Figure 6). However, the pure amine becomes quite viscous when loaded with acetic acid and could not be easily used in an industrial extractor.

The results obtained by Sakai, et al. (1969) for extraction of acetic acid by Amberlite LA 2 in methyl isobutyl ketone (MIBK) are qualitatively similar to those obtained for the Adogen 283/2-heptanone system in the present work (Figure 5). The LA 2/MIBK extractant gives K_D values approximately 20% lower than the Adogen 283/2-heptanone system for similar extraction conditions. Again, this indicates that Adogen 283 is the more powerful extractant for acetic acid.

Unfortunately, Adogen 283 D cannot be regenerated

by distillation because it reacts with acetic acid to form an amide, as follows:

$$\underset{\text{(acetic acid)}}{CH_3\overset{\overset{\displaystyle O}{\|}}{C}-OH} + \underset{\text{(secondary amine)}}{R_2NH} \longrightarrow \underset{\text{(amide)}}{CH_3\overset{\overset{\displaystyle O}{\|}}{C}-NR_2} + H_2O$$

This reaction forms the basis for a test to determine the amount of secondary amine in a mixture of secondary and tertiary amines (Ashland Chem. Co.), and was assumed to be the reason for disappearance of acid in regeneration experiments performed in this work (see below). The reaction is encouraged by the high temperature and dehydrating conditions that occur in distillation. The resulting loss of amine would be too costly for such a process to be economical.

Distillation has a substantial cost advantage over other regeneration methods for the extraction applications considered in this work. Amide formation was thus a serious disadvantage for secondary amines, and they were not investigated further.

Tertiary Amines

Tertiary amines do not form amides and are thus more promising for general use. The K_D values of the amines are not as high as those for Adogen 283 D, but with the better diluents are often much higher than those for TOPO. Values as high as 22.0 were measured for Alamine 336 (Figure 6).

The symmetrical tertiary amines are all quite similar as extractants for acetic acid--there is not much variation in K_D with amine structure, probably because the commercial amines are isomeric mixtures of quite similar composition (Ricker, 1978). In general, as molecular weight increases, the water-solubility of the amine and its acid complex decrease, as would be expected, due to the increasing hydrocarbon-like character of the amine. Tri-butyl amine is a relatively poor extractant because the reaction product is too water soluble (Wardell and King, 1978). An independent, GC measurement showed that the solubility of tri-butyl amine in water is 3.1 wt %, in the presence of 1% acetic acid (Pittman, 1979). Adogen 381, tri-iso-octyl amine, also seemed to be somewhat soluble in aqueous solutions of acetic acid, although its solubility was not determined accurately. The higher-molecular-weight amines are essentially insoluble (Ricker, 1978), and K_D values

for similar extractions tend to be slightly higher than for Adogen 381, up to a point. As molecular weight continues to increase, the equivalent weight of base decreases. The optimum seems to be in the tri-C_8-C_{10} range (Adogen 364, Alamine 336); tri-C_{12} amine (Adogen 363) appears to be beyond the optimum molecular weight (Table 13).

A tertiary amine with two symmetrical alkyl chains, but with a methyl group as the third alkyl group was synthesized from the secondary amine, Adogen 283 D. Its structure is thus more like that of Adogen 283 D than the more symmetrical tertiary amines. However, it performed much like Alamine 336 in extraction experiments, indicating that secondary amines are fundamentally more powerful extractants than tertiary amines of similar structure.

Alamine 336 was the major extractant investigated in this work. However, the results obtained with Alamine 336 are probably representative of other commercial tertiary amines in the same molecular weight range, e.g., Adogen 364.

Water-solubility of Tertiary Amines

The water-solubility of the major components of Alamine 336, i.e., the C_8-C_{10} tertiary amines, is reported to be less than 5 ppm (General Mills). Chromatographic analyses by Pittman (1979) and Ricker (1978) showed that even in the presence of 10 wt % acetic acid, the combined solubility of these amines was less than 10 ppm. However, as pointed out in the product literature of several amine manufacturers (General Mills, Rohm & Haas, Ashland Chemical Co.), commercial grades of these extractants contain on the order of 2-5 wt.% impurities, which can be primary and secondary amines, lower-molecular-weight tertiary amines, and starting materials for the amine synthesis reaction. Some of these may be quite water-soluble. In several cases, Pittman (1979) noted the presence of unidentified soluble impurities in the raffinate phase following extraction with Alamine 336. Tests indicated that the impurities might be amines of some type. Such impurities would gradually extract into the aqueous phase in an operating extraction process and would represent a one-time loss of solvent, albeit a relatively small loss.

EFFECT OF DILUENT TYPE, AMINE CONCENTRATION AND ACID CONCENTRATION ON K_D

The acetic acid K_D value in amine extractant systems

was a strong function of several factors. Alamine 336 was tested thoroughly to see which combinations of variables resulted in high K_D values. Representative results are shown in Figure 6.

As previously mentioned, for chemically-interacting extractants, K_D generally decreases with increasing acetic acid concentration, especially in the concentration range shown in Figure 6. This effect is due to the chemical equilibrium between the acid and the amine in the organic phase. Qualitatively, as the acid concentration increases, the amine complexes with the acid more and more completely, which decreases the capacity of the amine to extract additional acid. The degree of complexing at any point depends on the equilibrium constant of the acid-base complexing reaction and the activities of the reactants and products. When the amine is highly complexed, the extraction behavior becomes like that of a non-chemical extractant, and K_D is no longer a strong function of acid concentration.

One would then expect an increase in the amine concentration to give higher distribution coefficients, and this does happen for low-to-moderate amine concentrations, as shown in Figure 6. However, if the amine concentration increases beyond a certain point, which depends on the diluent, K_D begins to decrease. For example, the curve for 100% amine in Figure 6 is lower than that for a solution of 5% amine in 2-ethyl hexanol.

Such behavior cannot be explained by a simple chemical equilibrium theory; it appears to be due to a combination of chemical and physical interactions in the solvent phase. Pure Alamine 336 is a relatively non-polar compound, since the N atom is surrounded by long hydrocarbon chains. The acid-amine complex, on the other hand, is much more polar; its formation appears to be inhibited in non-polar solutions. A more polar solvent such as 2-ethyl hexanol allows a greater degree of complex formation at a given aqueous-phase acid activity.

As previously mentioned, the pure secondary amines are much more effective extractants than the pure tertiary amines. Apparently, the secondary amines are sufficiently polar to solvate the complex to a high degree, whereas the tertiary amines are not.

Similar considerations explain the variation of K_D with the type of diluent. The more polar diluents give higher K_D values, in general (Wardell and King, 1978), and the

order of effectiveness appears to be the same as for extraction of acetic acid with the pure diluent (i.e., alcohols ketones esters ethers). Hydrocarbon-like solvents are very poor diluents (Table 14), as would be expected.

The effect of the diluent can be seen most clearly in the dilute-acid region, below about 1 wt. %. Here, complex-diluent interactions predominate. For dilute acid in the presence of an excess of amine, a "good" diluent, such as 2-ethyl hexanol allows a high degree of complex formation and thus gives high K_D values. In other words, the activity coefficient of the acid-amine complex is reduced by a good diluent.

The primary alcohols, as a class, give the highest K_D values measured, much higher than ketones (Figure 6). A possible explanation is that an alcohol has an acidic hydrogen available for hydrogen bonding, whereas a ketone does not. The acidic hydrogen on the acid molecule is probably tied up in the acid-amine complex, leaving only the carbonyl oxygen for hydrogen bonding, i.e., an acidic hydrogen would be required for such a bond.

It is interesting to note that chloroform appears to be a good diluent at low acid concentrations, giving K_D values on the order of 10.0 (Wardell and King, 1978). Chloroform also has a slightly acidic hydrogen available for bonding with a carbonyl oxygen.

Unfortunately, alcohols are probably a poor choice for extraction of acetic acid because of the potential for esterification (see below). Chloroform is quite volatile and is a suspected carcinogen. Aldehydes might hydrogen-bond with the acid-amine complex; however, aldehydes are relatively reactive organic chemicals, and they were not investigated experimentally.

EXTRACTION EQUILIBRIA FOR ALAMINE 336 IN KETONE DILUENTS

Ketone diluents were studied extensively, since they give relatively high K_D values and yet are not as prone to chemical reaction as are alcohols. Extraction equilibria for 50 volume % Alamine 336 dissolved in 2-heptanone, DIBK, and a combination of 2 parts by volume of cyclohexanone plus 3 parts of DIBK are compared in Figure 7. More detailed data are given elsewhere (Ricker, 1978; Ricker et al, 1979a).

One would probably expect the Alamine 336/DIBK combination to give lower K_D values than those for Alamine 336/2-heptanone. The data in Figure 7 indicate that

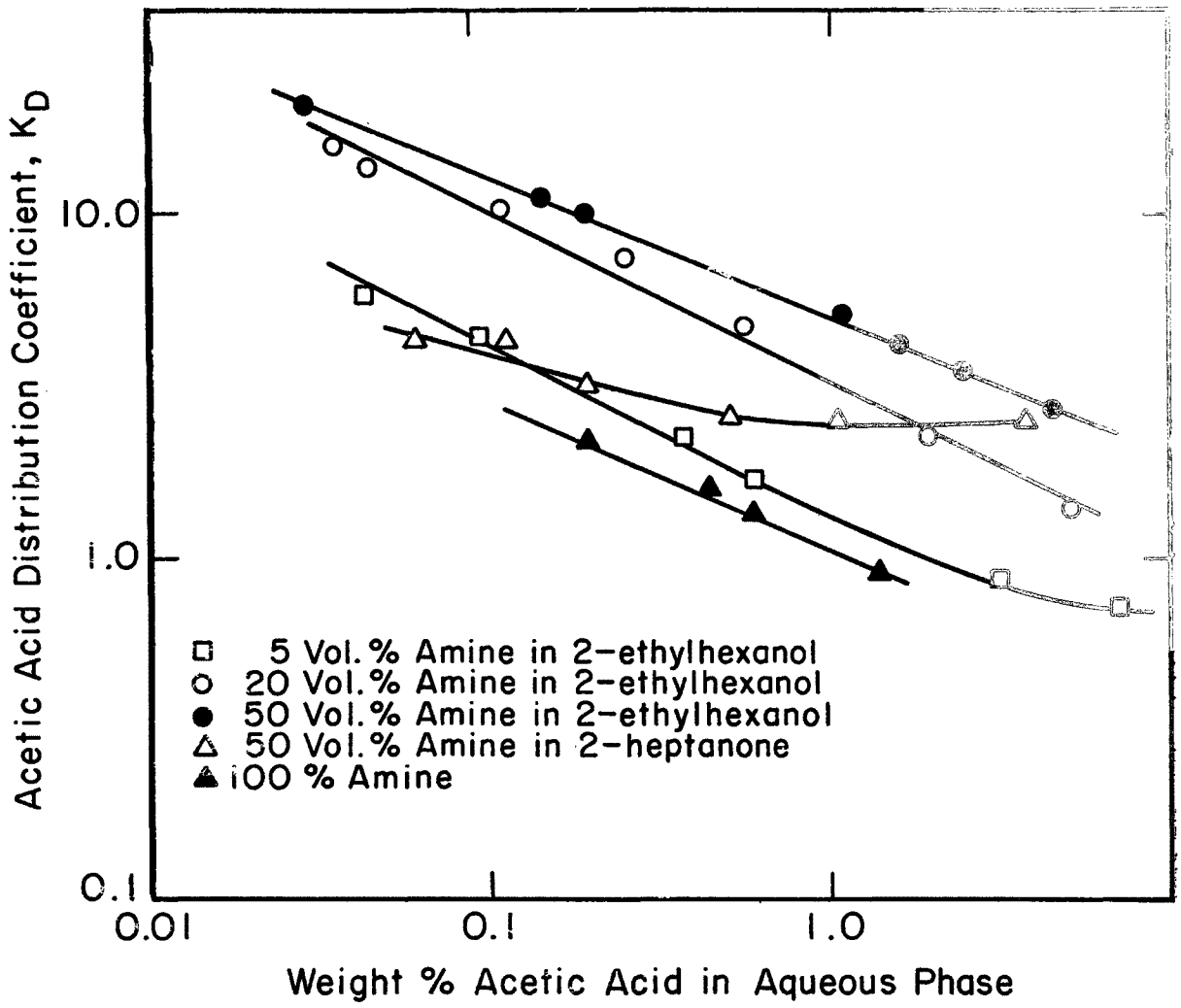

Figure 6. Extraction of acetic acid by Alamine 336 in various diluents.

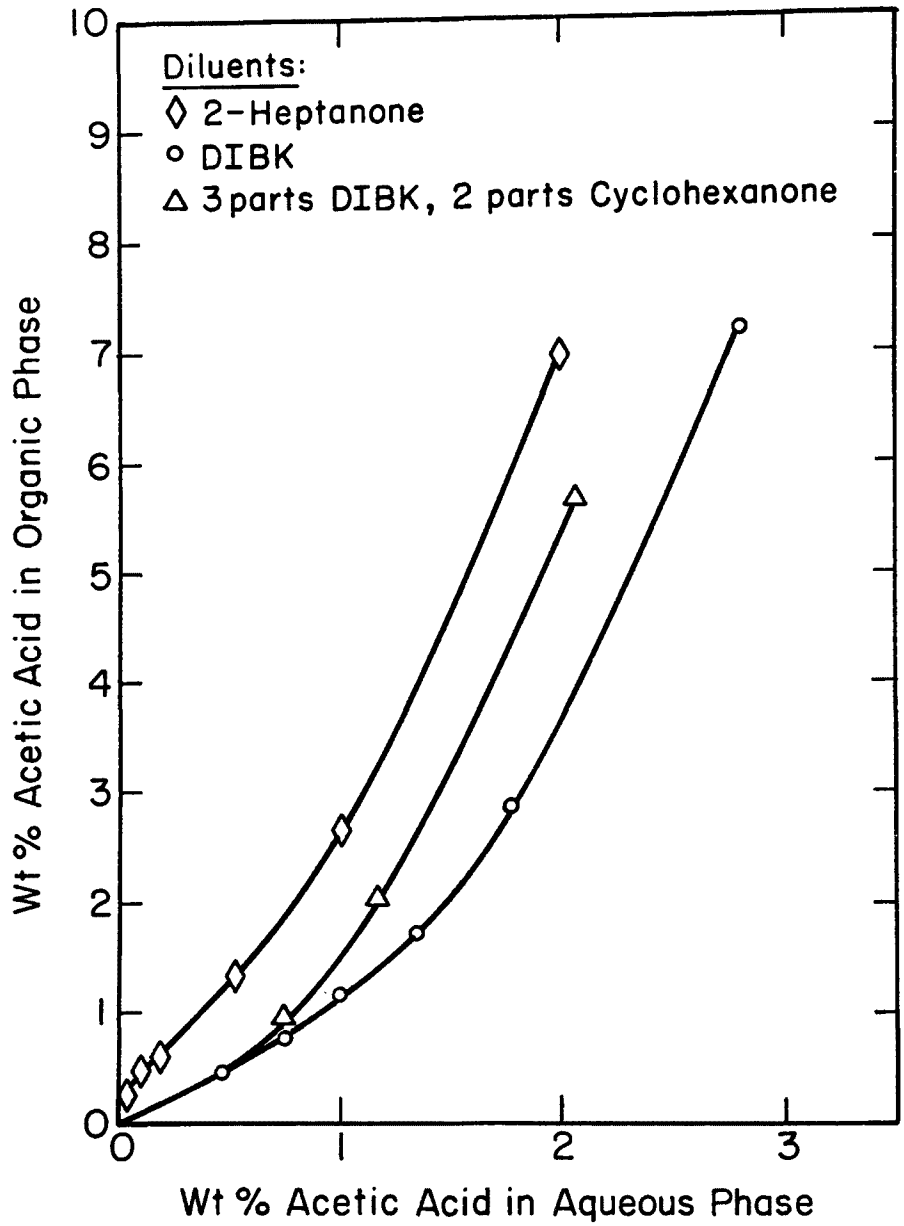

Figure 7. Extraction equilibria for 50 vol. % Alamine 336 in ketone diluents.

this is the case. However, there is an important difference between the two equilibrium curves: the curve for the 2-heptanone diluent is concave-downward at the lower acetic acid concentrations, as for the 2-ethyl hexanol diluent (Figure 6), whereas that for DIBK is concave-upward. The concave-upward shape is a disadvantage because it makes it difficult to achieve a high degree of acid removal in a multi-stage extractor, i.e., the operating and equilibrium lines "pinch" at the dilute end of the extractor cascade.

For the 2-heptanone diluent, the K_D for acetic acid is highest in the dilute-acid region, and gradually decreases with increasing acid concentration (Figure 6), due to the disappearance of un-complexed amine. For DIBK, the K_D is quite low in the dilute region, but increases with increasing acid concentration to at least 5 wt.% aqueous acid. The K_D probably begins to decrease again at some higher acid concentration; such measurements were not performed in the present work.

The increase in K_D at intermediate acid concentrations is probably due to complex-complex or complex-acid interactions, i.e., the pure DIBK seems to inhibit complex formation, but once enough polar species are present in the extractant phase, the complex forms more readily.

Possible support of this hypothesis is given by two experimental results. First, in initial experiments using technical grade DIBK as received from the supplier, the extraction equilibria for DIBK was very much like that of 2-heptanone, i.e., it did not exhibit a concave-upward equilibrium curve. Unfortunately, this supply of DIBK was not analyzed carefully for impurities, and the reason for this behavior is not clear. Second, the acetic acid K_D value is usually higher for Alamine 336/DIBK extractions of wastewaters than for extractions of synthetic aqueous acetic acid solutions. This may be due to the co-extraction of polar impurities, although these are usually dilute. For example, the result for 50% Alamine 336 in distilled DIBK which has a K_D value of 1.00, is about 20% below the curve shown in Figure 7 Ricker, 1978).

The performance of pure DIBK diluent might then be enhanced by the addition of an appropriate polar species. Figure 7 shows that an Alamine 336/DIBK/cyclohexanone combination gives higher K_D values than Alamine 336/DIBK. The use of acetophenone or 3-methyl cyclohexanone as additives results in even higher K_D values, as shown in Figure 8.

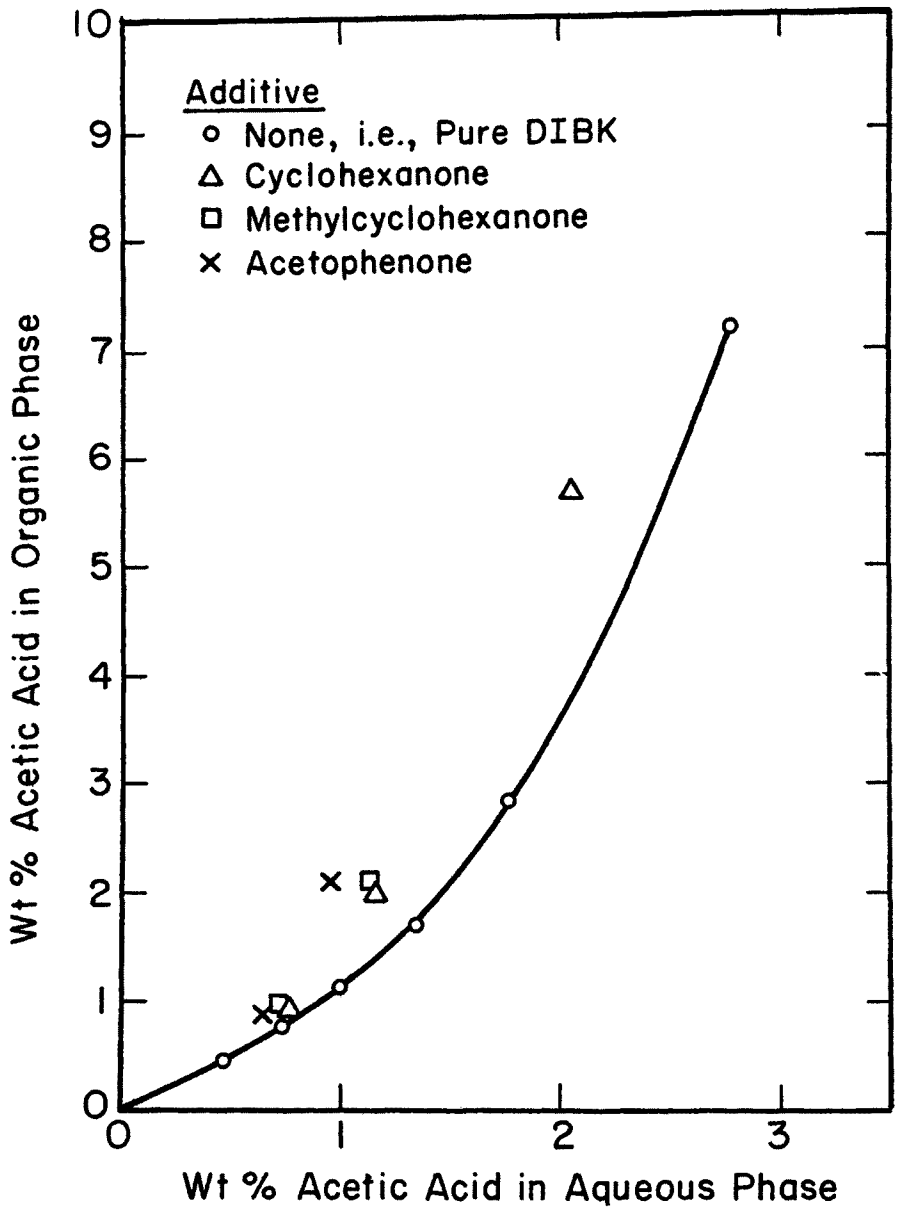

Figure 8. Extraction equilibria for 50 vol. % Alamine 336 in DIBK, and in 3 parts DIBK/2 parts polar additive.

The results in Figure 7 also suggest that a C_9 methyl-ketone, such as 2-nonanone, might be more effective than DIBK. Ashland Chemical Company literature advertises 2-nonanone as well as 3-octanone, another interesting possibility. These diluents would be much higher-boiling than 2-heptanone, an advantage for the regeneration step in the extraction process.

TOPO was also found to be an effective additive for the Alamine 336/DIBK system. A solvent mixture of 8% TOPO, 50% DIBK and 42% Alamine 336 gave K_D = 1.9 and K_D = 1.75 for 0.44% and 0.32% respectively, acetic acid in water (Pittman, 1979).

The extraction equilibria for Alamine 336/DIBK are shown in Figure 9 as a function of Alamine concentration. The curves for the various amine concentrations are quite similar in the dilute region, but diverge at the higher acid concentrations because of acid-base stoichiometry.

The corresponding equilibrium water-content of the extractant phase is shown in Figure 10 (Ricker, et al, 1979b). Hardwick and Wace (1965) report a roughly 1:1 correspondence between moles of acid-base complex and moles of water in the extractant phase at equilibrium for the extraction of HF. If the acid in the organic phase is assumed to be mainly in the complexed form, this would seem to be a reasonable approximation for the data in Figure 10 as well, although the data are scattered.

PREDICTION OF THE ACETIC-ACID DISTRIBUTION COEFFICIENT FOR AN AMINE EXTRACTANT

Some consideration was given to the development of a thermodynamic model of the extraction of acetic acid by an amine extractant. An effective model would allow the prediction of extraction equilibria from limited experimental data.

Sakai, et al. (1969) studied the extraction of acetic acid by Amberlite LA-2, a secondary amine, dissolved in four organic diluents--carbon tetrachloride, chloroform, n-hexane and methyl isobutyl ketone (MIBK). They proposed a simple chemical-equilibrium model of the organic phase in which the species present were acid, diluent and amine monomers, an acid dimer, and complexes of one amine molecule plus 1-4 acid molecules. The resulting equations fit the data quite well, but six adjustable parameters were required. The model does not account for physical interactions in the organic phase and would not, for example, predict the decrease in K_D at high amine concentrations observed experimentally in the present work.

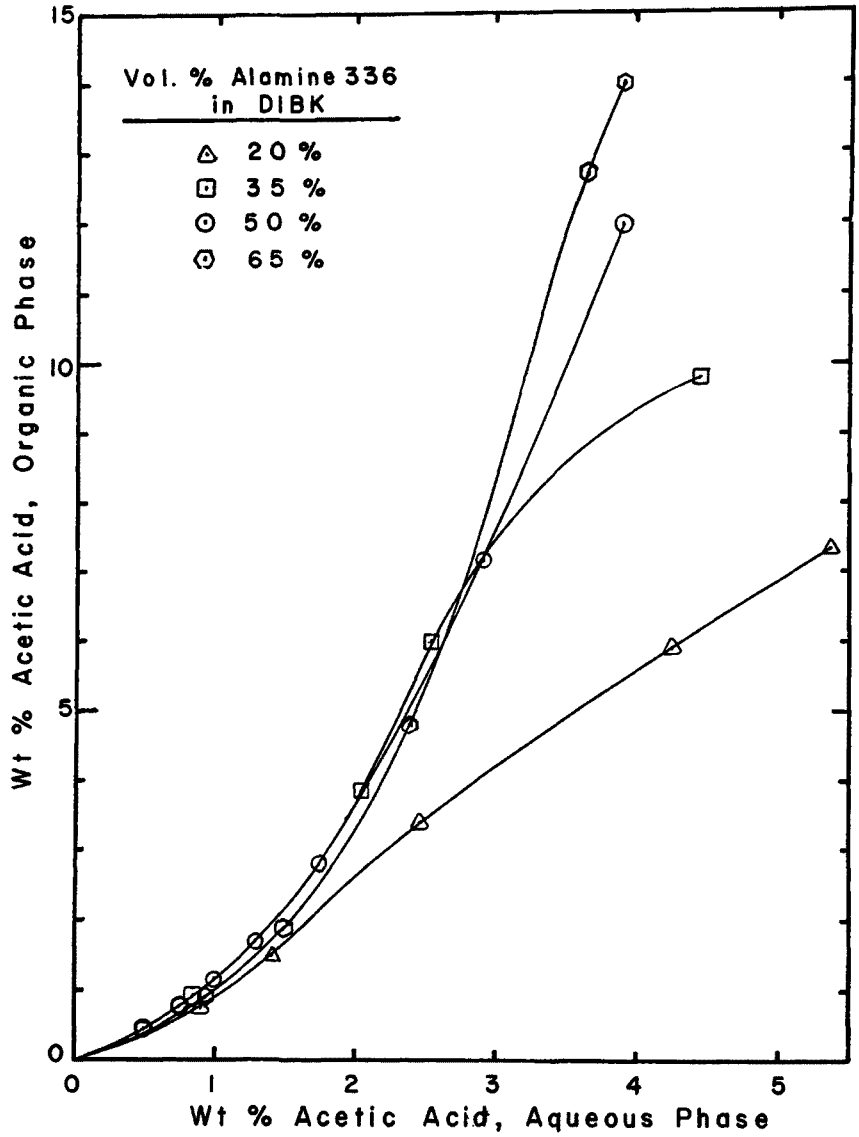

Figure 9. Extraction of acetic acid from wastewater H by Alamine 336 in DIBK.

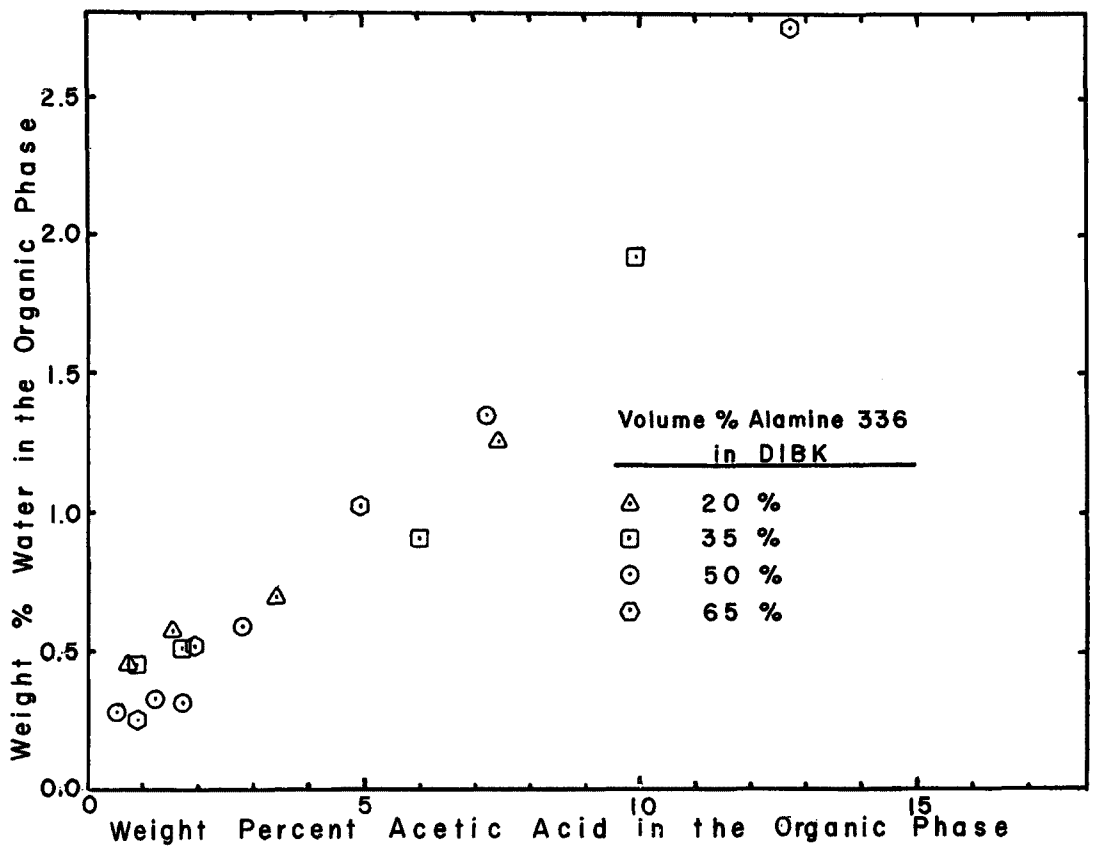

Figure 10. Water-content of organic phase for extraction of wastewater H by Alamine 336/DIBK.

Inoue and Baba (1978) attempted to use the same model to correlate the extraction of acetic acid by Amberlite LA-2 diluted with cyclohexanone, benzene and chlorobenzene. Physical interactions apparently caused a poor fit to the data for the aromatic diluents, even though six adjustable parameters were used.

In the present work, a study of the Alamine 336/2-ethyl hexanol/acetic acid/water system indicated that a simple chemical equilibrium theory would be inadequate for amine concentrations above about 5 wt.% (1.5 mole %) in the organic phase. A better model might be developed along the lines of the model of Harris and Prausnitz (1969), which accounts for both chemical and physical interactions and requires only two adjustable parameters. However, the activity-coefficient equations used by Harris and Prausnitz (1969) do not seem to give a good representation of the data obtained in the present work; a more sophisticated model of the physical interactions is probably required, e.g., as in the UNIQUAC theory (Abrams and Prausnitz, 1975). Development of such a model would be quite difficult and was felt to be beyond the scope of the present work.

EXTRACTANTS FOR CHLORINATED ACETALDEHYDES

The extraction of chlorinated acetaldehydes from water has received very little attention, especially in comparison to the voluminous literature on extraction of acetic acid. Some mention is made of the use of ether for extraction of chloroacetaldehyde (Miller, 1969a), but no details are given.

The work of Earhart, et al. (1977), and Michaels (1977) indicates that the most effective extractants for chlorinated acetaldehydes are primary alcohols of six to eight carbon atoms. A comparison between the primary alcohol, 2-ethyl-1-hexanol, and several other solvents is shown in Table 17. Distribution coefficients for chloral are not given; these are always higher than for monochloro (MCA) and dichloro (DCA) acetaldehyde. For example, Earhart, et al. (1977) reported a K_D value of about 50.0 for extraction of chloral by 2-ethyl-1-hexanol. As shown in Table 17, K_D values for MCA are always substantially lower than for the other chlorinated acetaldehydes. Since MCA is present in each of the wastewater samples that contain chlorinated acetaldehydes, MCA is the limiting solute for extraction.

The primary alcohols give relatively high K_D values because of a specific chemical interaction between the

TABLE 17. EXTRACTION OF CHLORINATED ACETALDEHYDES BY SEVERAL COMMON SOLVENTS

Solvent	$(K_D)_{MCA}$	$(K_D)_{DCA}$	Reference
2-ethyl-1-hexanol	8.34	14.3	Michaels
2-octanol	2.04	3.58	"
3-methyl-3-pentanol	0.64	1.65	"
2-heptanone	0.30	1.23	"
cyclohexanone	1.24	5.60	"
ethyl ether	1.61	-	this work
butyl acetate	0.28	1.11	"
methyl isobutyl ketone	0.44	2.22	"

MCA = monochloroacetaldehyde

DCA = dichloroacetaldehyde

All results are for equilibrium values, i.e., long contact time

aldehyde and the alcohol (Morrison and Boyd, 1966a):

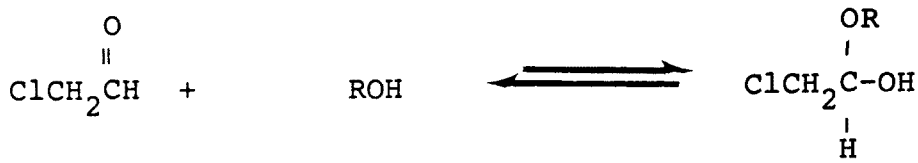

(MCA) (primary alcohol) (hemi-acetal)

Distribution of the hemiacetal favors the alcohol phase, while un-complexed MCA is hydrated in aqueous solution and does not favor the organic phase.

Earhart, et al. (1977) and Michaels (1977) found that the extraction performance of 2-ethyl-1-hexanol varied significantly with the interphase contact time in the extraction step. Distribution coefficients increased slowly with time, finally attaining an equilibrium value. The time constants for extraction of MCA and chloral were about 30 and 6 minutes, respectively. Michaels (1977) shows that the extraction of MCA is probably limited by the rate of hemiacetal formation. Earhart, et al. (1977) found that the rate of chloral extraction could be accelerated somewhat by the addition of carboxylic acids. However, the effective K_D in an operating extractor is likely to be lower than the equilibrium value.

Another disadvantage of the primary alcohols is that they cannot be regenerated by distillation. Esterification is a problem because acetic acid co-extracts with the other solutes. Moreover, the chlorinated acetaldehydes are reactive chemicals; the hemiacetal formed in the extraction step can react with another alcohol molecule to yield an acetal (Miller, 1969):

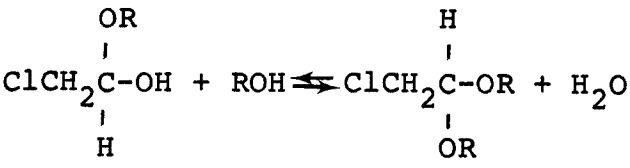

Other undesirable side reactions are also possible. For this and other reasons discussed subsequently, treatment of the Wacker-process wastewaters by extraction is likely to be costly.

SOLVENT-REGENERATION STUDIES

The regenerability of acetic-acid extractants was tested qualitatively in bench-scale batch distillations. A small quantity of the extractant, typically 200 ml, was used to extract solutes from one of the wastewater samples. Alternatively, pure acetic acid was added to the pure extractant. The extractant was then distilled in a 500-ml boiling flask equipped with a small packed column. Refluxing occurred due to natural heat losses and resulting condensation. The vapor leaving the column was condensed and collected in a receiver. The temperature of the overhead vapor was measured with a thermometer.

The condensate and residue were analyzed by GC, and mass balances were performed for all the components. The very volatile components, such as acetaldehyde and chlorinated acetaldehydes, always gave poor mass balance closures. Typically 20-40% of the volatile components disappeared during the distillation, probably due to incomplete condensation.

Similar behavior for the less volatile components was taken to indicate a chemical reaction between that solute and another solute or the extractant. For example, large losses of acetic acid were observed in distillation with alcohols due to esterification, and in distillations with secondary amines (e.g., Adogen 283 D) due to amide formation.

For the secondary amine, molar losses of amine and acid were nearly 1:1, which is the correct stoichiometry for amide formation. Nearly 40% of the amine was converted to amide in a 3-hour distillation. On the other hand, the mass balances for the tertiary amine case were within experiment error, indicating no reaction. Tertiary amines are incapable of amide formation, so good closures would be expected.

An attempt was made to inhibit amide formation by distilling at lower temperature, i.e., under vacuum. Otherwise, the experimental conditions were the same as before. About 6% amine loss still occurred, and low-temperature operation decreases the acid/diluent relative volatility, making regeneration more difficult Although Adogen 283 D gave the highest K_D values observed in extraction experiments, the regeneration experiments showed that secondary amines are probably a poor choice for an extraction process involving acetic acid unless an alternative regeneration method is used.

The batch distillation experiments also provided dramatic

evidence of the incompatability of chlorinated acetaldehydes and amines. When an attempt was made to distill a batch of monochloroacetaldehyde and Alamine 336, as soon as the temperature of the mixture increased appreciably, the contents of the flask turned dark and became viscous. A titration of the residue showed that the amine content had been greatly reduced.

Studies of regeneration of Alamine 336 extractant by continuous and semi-batch distillation are reported elsewhere (Ricker, 1978). This evidenced no difficulties.

Regeneration of Solvents Containing Chlorinated Acetaldehydes By Sodium Bisulfite Wash

A quick, screening experiment was performed to test the regeneration of an extractant for Wacker-process wastewaters by a sodium bisulfite ($NaHSO_3$) wash. The basic concept was to remove chlorinated acetaldehyde by the following reaction (Morrison and Boyd, 1966c):

$$-\underset{\underset{O}{\|}}{C}- \; + \; Na^+HSO_3^- \rightleftharpoons -\underset{\underset{OH}{|}}{C}-SO_3^-Na^+$$

(aldehyde or ketone) (sodium bisulfite) (addition product)

Addition involves nucleophylic attack by bisulfite ion on carbonyl carbon, followed by attachment of a hydrogen ion to the carbonyl oxygen. The reaction is reversible; addition of acid or base destroys the bisulfite ion in equilibrium with the addition product and regenerates the carbonyl compound:

$$\underset{\underset{OH}{|}}{C}-SO_3^-Na^+ \rightarrow \underset{\underset{O}{\|}}{-C-} + HSO_3^- \begin{cases} \nearrow H^+ \quad SO_2 + H_2O \\ \searrow OH^- \quad SO_3^= + H_2O \end{cases}$$

The addition product is usually only partially soluble in aqueous bisulfite ion solution, so that it might conceivably be removed as a solid product by filtration for eventual disposal.

In the experiment, 450 ml of wastewater sample F was contacted with 50 ml of 2-ethyl-1-hexanol in a separatory funnel. The extract phase was decanted, and 0.323 kg was subsequently contacted with 0.020 kg H_2O plus 0.00504 kg $NaHSO_3$. A strong odor of sulfur dioxide (SO_2) was noted but gas bubbles were not released. The 2-phase mixture was agitated by hand for 5 minutes, then allowed to separate for several hours. The phases were analyzed by GC for MCA and DCA (mono- and dichloroacetaldehyde) content, using the chromatographic techniques developed by Michaels (1977). The feed extract solution was also analyzed;

a rough mass balance gave the following results:

	% removal from solvent phase	apparent % reacted	apparent K_D
MCA	63	49	0.45
DCA	44	32	0.96

The per cent reacted was determined from the non-closure of the mass balance. Absolute concentrations were not measured; the results are relative to the extract feed concentration, which could be estimated from the K_D values of Michaels (1977), if desired.

The apparent K_D given above was based on a mass balance on the organic phase: ^{D}apparent K_D = [(1-x)·(wt. of aqueous phase)/[x·(wt. of organic phase)], where x is the fractional removal from the feed organic phase. In the presence of $NaHSO_3$, DCA only slightly favors the aqueous phase. Thus a large amount of wash solution would be required for complete regeneration of the extract, even if the wash step were multi-stage counter-current. The cost of the $NaHSO_3$ would be prohibitive. The unfavorable equilibrium may have been due to the presence of acetic acid and/or other solutes, such as acetone and acetaldehyde.

Another problem is that the addition product was soluble, and a substantial amount of unreacted MCA and DCA remained in the aqueous wash phase. Disposal of MCA and DCA in this form would probably be as serious a problem as disposal of the original wastewater. For these reasons, the idea was not pursued.

HEAT STABILITY OF AMINE EXTRACTANTS

Two experiments were performed to check the stability of Alamine 336 at the maximum temperature likely to be encountered in an extraction process, i.e., in the reboiler of the regeneration column. Hardwick and Wace (1965) report small but measureable degradation of Alamine 336 at 280°C in the presence of hydrogen fluoride. The maximum operating temperature contemplated in the present work is considerably less severe, about 180°C, and it was anticipated that, unless degradation were to be caused by a reaction with one of the wastewater solutes, degradation should be negligible compared to other mechanisms for amine loss, e.g., by entrainment.

In the first experiment to test for degradation, 100 ml of DIBK, 100 ml of Alamine 336, and 2 ml of acetic acid were heated in a 250-ml boiling flask equipped with a refluxing

condenser. A small flow of nitrogen gas (N_2) was continuously fed into the top of the refluxing condenser via a glass tube, the outlet of which was about 5 cm above the active condensing region in the condenser. The purpose of the N_2 was to prevent diffusion of air into the boiling flask.

The temperature of the boiling liquid rose slowly throughout the experiment from 173°C to a maximum of 184°C, indicating a gradual loss of volatiles--probably due to incomplete condensation. The boiling liquid remained a clear, pale, yellow color throughout; it did not turn dark brown as in the regeneration experiments.

Samples were taken at 72 and 193 hours, at which time the experiment was terminated. A sample of the original feed was also taken. The samples were analyzed for amine content as described elsewhere (Ricker, 1978; Ricker et al, 1979a). Peak areas for amine peaks were totalled and relative areas were determined. The relative areas were very reproducible; the standard deviation was less than 1%. The relative areas were essentially the same for all these samples and compared well with the values determined for the pure amines.

The total peak area for the chromatogram was also determined, including the peaks preceding the first amine peak (DIBK, acetic acid, and volatile impurities). The total area of the amine peaks increased slightly with respect to that of the lighter peaks as the experiment progressed. In the feed sample, the total amine peak area was 58.2% of the total area, while it was 61.5% and 60.5% at 72 and 193 hours, respectively. Again, this seemed to indicate a loss of volatiles rather than degradation, which should have caused a reduction in the relative amount of amine. No new peaks were found in the chromatogram, and no other signs of a degradation reaction were apparent.

In the second experiment, the extract phase from an extraction of wastewater sample G was used in place of a synthetic mixture of DIBK, Alamine 336, and acetic acid. The extract was from Pittman's (1979) run #16, containing about 5 wt.% acetic acid and lesser amounts of the other solutes found in wastewater G.

The experimental procedure and method of analysis were the same as for the first experiment. Again, there was a slight increase in the relative amine concentration with time, and there were no measureable signs of amine-degradation. The feed solution was dark brown, having been regenerated many times. There may have been some additional coloring during the experiment; the final

liquid was noticeably more turbid than the feed, but a 2-cm-thick sample was still quite transparent.

In summation, thermal degradation of the amine does not appear to be a significant problem. Hardwick and Wace (1965) suggest that a branched-chain amine should be even more stable than the straight-chain amines typified by Alamine 336.

SECTION 6

EXPERIMENTAL EXTRACTION RESULTS

Experimental measurements of countercurrent extraction with actual wastewaters and candidate solvents were made using a miniplant rotating-disc contactor (RDC) extractor. These served to demonstrate performance attainable with regard to mass transfer, axial mixing and solvent entrainment. A few runs were also made with a system of separatory funnels, simulating a countercurrent mixer-settler system.

RDC EXTRACTION RUNS

The RDC extraction runs were made with the miniplant system described by Earhart, et al (1976, 1977). They are described in more detail by Sanchez (1977) and Pittman (1979). Mass balance non-closures are not reported in these tables. They were determined and are available elsewhere (Sanchez, 1977; Pittman, 1979). Mass transfer analyses of these runs are reported by Ricker, et al (1979c), and show that the performance of the RDC was heavily dominated by axial mixing.

Results of these runs are reported in Tables 18 through 36.

COUNTERCURRENT SEPARATORY FUNNEL SYSTEM

Results of a countercurrent separatory funnel experiment for extraction of acetic acid by Alamine 336/DIBK are given by Ricker, et al (1979b). Results of scattered other experiments of this sort are given by Ricker (1978).

TABLE 18. CONDITIONS AND RESULTS FOR MINI-PLANT EXTRACTION RUN 1

wastewater = synthetic mixture (continuous phase)
solvent = n-butyl acetate (dispersed phase)
water flow rate = 9.46 L/h = 9.48 kg/h
solvent flow rate = 3.56 L/h = 3.18 kg/h
solvent-to-water ratio = 0.33 kg/kg = 0.38 L/L
density of solvent = 0.876 kg/L (25°C)
shaft rotation speed = 1200 rpm
estimated droplet size = 0.75 mm diameter
column pressure (top) = 390 kPa
average column temperature = 20.5°C
rotor disc diameter = 3.81 cm
stator hole diameter = 5.72 cm

Component	Feed Water (ppm)	Steady-State Raffinate (ppm)	Percent Removal
acetic acid	850	785	8
acetaldehyde	300	250	17
2-butanol	180	60	67
methyl isobutyl ketone	130	4	97
acetone	0	1910	-
n-butyl acetate	0	7320	-
TOD	2300	21800	
COD	2798	18950	
COD/TOD	1.22	0.87	

TABLE 19. CONDITIONS AND RESULTS FOR MINI-PLANT EXTRACTION RUN 2

Conditions

wastewater = A

solvent = n-amyl alcohol

water flow rate = 4.54 kg/h = 4.54 L/h (continuous phase)

solvent flow rate = 6.76 kg/h = 8.33 L/h (dispersed phase)

solvent-to-water ratio = 1.50 kg/kg = 1.83 L/L

density of solvent = 0.812 kg/L (25°C)

shaft rotation speed = 865 rpm

estimated droplet size = 0.2 mm diameter

column pressure (top) = 400 kPa

average column temperature = 20.6°C

rotor disc diameter = 3.81 cm

stator hole diameter = 5.72 cm

a. Gas Chromatograph (concentrations in ppm, by weight, unless otherwise noted)

Component	Water Feed	Steady State Raffinate	Steady State Extract	Percent Removal
formic acid	870	174	?	80
acetic acid	560	128	(260)	77
propionic acid	78	23	?	71
methanol	50	19	25	62
ethanol	539	36	292	93
isopropanol	130	?	?	-
n-propanol	41	5	34	88
2-butanol	226	27	133	88
n-butanol	70	26	?	63
methyl ethyl ketone	309	21	154	92
isobutyraldehyde	129	16	95	88
acetone	23	943	389	-
n-amyl alcohol	0	1.78 wt.%	-	-

(continued)

TABLE 19. (continued)

b. Acid/Base Titration

water feed: 0.0295 g equivalents acid/L

steady state raffinate: 0.0063 g equivalents acid/L

steady state removal of acid = 79%

c. COD Analysis (ppm)

	TOD	COD	COD/TOC
water feed	4,570	4,760	1.04
steady state raffinate	51,170	47,800	0.93

TABLE 20. CONDITIONS AND RESULTS FOR MINI-PLANT EXTRACTION RUN 3

Conditions

wastewater = A

solvent = n-amyl alcohol

water flow rate = 1.89 L/h = 1.89 kg/h

solvent flow rate = 3.48 L/h = 2.84 kg/h

solvent-to-water flow ratio = 1.50 kg/kg = 1.84 L/L

solvent density = 0.812 kg/L (25°C)

shaft rotation speed = 750 rpm

estimated droplet size = 0.5 mm (approx.)

column pressure (top) = 400 kPa

average column temperature = 18°C (approx.)

rotor disc diameter = 3.81 cm

stator hole diameter = 5.72 cm

a. Gas Chromatograph (ppm, unless otherwise indicated)

Steady State Samples

Component	Water Feed	Raffinate	Extract	Percent Removal
methanol	85	31	27	63
formic acid	940	230	158	75
ethanol	594	73	330	88
acetone	39	7	19	83
isopropanol	197	3	115	99
n-propanol + isobutyraldehyde	225	4	152	98
acetic acid	744	113	634	85
methyl ethyl ketone	318	2	174	99
2-butanol	298	4	169	99
propionic acid	139	-	-	-
amyl alcohol	0	17,300	-	-

b. Acid/Base Titration

water feed = 0.0346 g equiv. acid/L

steady state raffinate = 0.0069 equiv. acid/L

(continued)

TABLE 20. (continued)

steady state extract = 0.014 g equiv. acid/L

solvent feed = 0.0004 g equiv. acid/L

steady state removal of acid = 80%

c. COD Analysis (ppm)

	COD	TOD_1	TOD_2	COD/TOD_1
water feed	6350	5339	5339	1.19
steady state raffinate	49700	49200	444	1.01
whole-run raffinate	44500	48100	1643	0.93

TOD: with amyl alcohol included

TABLE 21. CONDITIONS AND RESULTS FOR MINI-PLANT EXTRACTION RUN 4

wastewater = F

solvent = 2-ethyl hexanol (95%+)

water flow rate = 1.74 L/h = 1.74 kg/h

solvent flow rate = 6.21 L/h = 5.18 kg/h

solvent-to-water ratio = 3.00 kg/kg = 3.57 L/L

solvent density = 0.829 kg/L (25°C)

shaft rotational speed = 1090 rpm

estimated droplet size = 1 mm diameter (approx.)

column pressure (top) = kPa

average column temperature = 24°C

rotor disc diameter = 3.81 cm

stator hole diameter = 5.72 cm

a. Gas Chromatograph (ppm)

Component	Water Feed	Solvent Feed	Steady State Raffinate	Steady State Extract	Percent Removal
methanol	76	8.5	67	12	12
acetaldehyde	150	~0	4	62	98
ethanol	174	67	143	77	18
MCA	7040	0	291	3130	96
acetic acid	16500	0	2680	5740	84
formic acid	1880	0	863	463	54
DCA					
chloral	6880	0	188	3010	97
crotonaldehyde					
2-ethyl hexanol	0	-	0.14%	-	-

b. Acid/Base Titration

water feed: 0.316 g equiv. acid/L

solvent feed: 0.0004 g equiv. acid/L

steady state raffinate: 0.063 g equiv. acid/L

steady state extract: 0.016 g equiv. acid/L

steady state removal of total acid = 80%

(continued)

TABLE 21. (continued)

c. COD Analysis (ppm)

	TOD_1 (without solvent)	TOD_2 (with solvent)	COD	COD/TOD_2
water feed	36700	36800	34500	0.94
steady state raffinate	4140	8260	7360	0.89
percent removal	89%	78%	79%	-

TABLE 22. CONDITIONS AND RESULTS FOR MINI-PLANT EXTRACTION RUN 5

wastewater = F

solvent = 50:50 (by volume) cyclohexanone and 2-ethyl hexanol

water flow rate = 1.89 L/h = 1.89 kg/h

solvent flow rate = 3.54 L/h = 3.15 kg/h

solvent-to-water ratio = 1.65 kg/kg = 1.87 L/I

solvent density = 0.89 kg/L

shaft rotational speed = 638 rpm

estimated droplet size = 0.5 mm (approx.)

column pressure (top) = 370 kPa

average column temperature = 21°C

rotor disc diameter = 3.81 cm

stator hole diameter = 5.72 cm

run time = 2 hr, 32 min

a. Gas Chromatograph (ppm)

Component	Steady State Removal
acetic acid	80%
acetaldehyde	76%
ethanol	43%
monochloroacetaldehyde	71%
dichloroacetaldehyde, chloral, crotonaldehyde	very high

b. Acid/Base Titration

water feed= 0.318 g. equiv. acid/L

solvent feed = 0.003 g equiv. acid/L

steady state raffinate = 0.063 g equiv. acid/L

steady state extract = 0.178 g equiv. acid/L

steady state removal of total acid = 80%

c. COD Analysis

water feed = 26000 ppm $\frac{COD}{TOD} = 0.90$

steady state raffinate = 120,500 ppm

TABLE 23. CONDITIONS AND RESULTS FOR MINI-PLANT EXTRACTION RUN 6

Conditions

wastewater = F

solvent = 50:50 (by volume) cyclohexanone and Alamine 336

water flow rate = 1.89 L/h = 1.89 kg/h

solvent flow rate = 2.20 L/h = 1.90 kg/h

solvent-to-water = 1.00 kg/kg = 1.16 kg/h

solvent density = 0.864 kg/L

shaft rotational speed:

(first 10 minutes)--413 rpm (minimum)

(next 10 minutes)-- 525 rpm

(final 50 minutes)--413 rpm

estimated droplet size:

(bottom of column)--0.7 mm (approx.)

(top of column)--1.0-1.5 mm

column pressure (top) = 200 kPa

average column temperature = 26°C

stator hole diameter = 5.72 cm

run time = 70 minutes

a. Gas Chromatograph

Compound	Water Feed	Steady State Raffinate	Steady State Extract	Percent Removal
acetic acid	20,500	2980	19800	85
acetaldehyde	401	217	66	46
ethanol	154	88	81	43
monochloroacetaldehyde	5,870	2750	3140	53

b. Acid/Base Titration

Steady State:

water feed: 0.358 g equiv. acid/L

solvent feed (blank): 0.00864 g equiv. acid/L

raffinate: 0.041 g equiv. acid/L

extract: 0.444 g equiv. acid/L

steady-state removal of acid = 89%

(continued)

TABLE 23. (continued)

c. COD Analysis

water feed = 32,300 ppm (COD/TOD = 1.09)

steady state raffinate = 58,200 ppm

pure water equilibrated with solvent = 189,500 ppm (centrifuged, but remained cloudy with a slight yellowish tint)

TABLE 24. CONDITIONS AND RESULTS FOR MINI-PLANT EXTRACTION RUN 7

wastewater = F

solvent = 75:25 (by volume) Alamine 336/2-heptanone

water flow rate = 1.89 L/h = 1.89 kg/h

solvent flow rate = 2.38 L/h = 1.89 kg/h

solvent-to-water ratio = 1.00 kg/kg = 1.26 L/L

density of solvent = 0.812 kg/L

shaft rotational speed:

(first 1-3/4 hours): 413 rpm (minimum)

(next 2 hours): 600 rpm

estimated droplet size:

(first 1-3/4 hours):

top of column: ~1 mm (wide distribution)

bottom of column: 1-4 mm (wide distribution)

13 cm below bottom stator: very tiny

(next 2 hours):

top of column: ~1.0 mm

bottom of column: ~0.5 mm

column pressure (top) = 200 kPa

average column temperature = 25°C

rotor disc diameter = 3.81 cm

stator hole diameter = 5.72 cm

total time for run = ~4 hours

a. Gas Chromatograph (concentration in ppm)

Compound	Water Feed	Steady State Raffinate	Steady State Extract	Percent Removal
acetic acid	15000	6600	10100	60
methanol	106	99	10	6.6
acetaldehyde	1320	1110	31	16
ethanol	227	205	37	9.7
monochloroacetaldehyde	4830	4280	459	12
dichloroacetaldehyde, chloral, crotonaldehyde	5510	2980	1760	46

(continued)

TABLE 24. (continued)

b. Acid/Base Titration

water feed: 0.357 g equivalents of acid/L

steady-state raffinate: 0.156 g equivalents of acid/L

steady-state extract: 0.185 g equivalents of acid/L

steady-state removal of total acid = 56.3%

c. COD Analysis

water feed: 27,500 ppm

steady-state raffinate: ~30,800 ppm

whole-run raffinate: ~26,000 ppm

pure water equilibrated with solvent: 18,100 ppm

TABLE 25. CONDITIONS AND RESULTS FOR MINI-PLANT EXTRACTION RUN 8

wastewater = F

solvent = 70:30 (by weight) Chevron Solvent 25/trioctyl phosphine oxide (TOPO)

water flow rate = 1.89 L/h = 1.89 kg/h

solvent flow rate = 2.38 L/h = 2.06 kg/h

solvent-to-water ratio = 1.09 kg/kg = 1.26 L/L

solvent density = 0.8627 kg/L

shaft rotation speed:

(first 10 minutes): 860 rpm

(final 122 minutes): 1090 rpm

estimated droplet size = 0.75 mm diameter (approx.)

column pressure (top) = 200 kPa

average column temperature = 23°C

rotor disc diameter = 3.81 cm

stator hole diameter = 5.72 cm

run time = 2 hours, 12 minutes

a. Results

Compound	Water Feed	Steady State Raffinate	Steady State Extract	Percent Removal
acetic acid	15000	3700	13700	75
methanol	96	74	32	23
acetaldehyde	167	96	44	43
ethanol	214	157	54	26
acetone	5	-	-	-
monochloroacetaldehyde	4990	3390	1590	32
DCA, chloral, crotonaldehyde	5660	1280	5040	77

b. Acid/Base Titration

water feed = 0.330 g equivalents acid/L

solvent feed = 0.037 g equivalents acid/L

steady state raffinate = 0.094 g equivalents acid/L

steady state extract = 0.293 g equivalents acid/L

(continued)

TABLE 25. (continued)

pure water (blank) equilibrated with solvent = 0.037 g equivalents acid/L
steady state removal of total acid = 71%

TABLE 26. CONDITIONS AND RESULTS FOR MINI-PLANT EXTRACTION RUN 9

Conditions

solvent: 50:50 (by volume) Alamine 336 and 2-ethyl hexanol
wastewater: G
water flow rate: 1.9 L/h = 1.9 kg/h (continuous phase)
solvent flow rate: 1.3 L/h = 1.0 kg/h (dispersed phase)
solvent-to-water ratio: 0.53 kg/kg
solvent density: 0.816 kg/L
extraction factor (acetic acid): $K_D S/W = 2$
shaft speed: 1000 rpm
column pressure (top): 170 kPa
rotor disc diameter: 3.81 cm
stator hole diameter: 5.72 cm
run time: 5 h

a. Gas Chromatograph

Component	Water Feed	Steady State Raffinate	Steady State Extract	Percent Removal
formic acid	2,450	0	8,230	100
methanol	409	359	77	3.4
acetaldehyde	213	146	74	31.5
ethanol	506	413	175	18.4
acetonitrile	721	650	136	9.8
acetone	1,538	750	3,417	51.2
acetic acid	51,300	4556	65,800	91.1
MEK	470	296	220	37.0
2-butanol	512	127	502	75.2
1-butanol	561	8	733	98.6
benzene			235	

b. Acid/Base Titration

water feed: 0.906 g. equivalents/L
steady state raffinate: 0.049 g. equivalents/L
steady state extract: 1.040 g. equivalents/L
steady state removal of acid = 96%

TABLE 27. CONDITIONS AND RESULTS FOR MINIPLANT EXTRACTION RUN 10

Conditions

solvent: 50:50 (by volume) Alamine 336 and 5-methyl-2-hexanone

wastewater: G

Flow rates: First steady state

water feed 1.47 L/h = 1.47 kg/h (continuous phase)

solvent feed 1.11 L/h = 0.92 kg/h (dispersed phase)

Second steady state

water feed 2.69 L/h = 2.69 kg/h (continuous phase)

solvent feed 2.41 L/h = 2.0 kg/h (dispersed phase)

solvent-to-water ratio:

First steady state = 0.63 kg/kg

Second steady state = 0.74 kg/kg

Extraction factor (acetic acid): $K_D S/W$

First steady state = 1.6

Second steady state = 1.9

shaft speed: 1000 rpm

column pressure: 101 kPa

rotor disc diameter: 3.81 cm

stator hole diameter: 5.72 cm

run time: 7 h

a. Gas Chromatograph (ppm) - 1st Steady State

Component	Water Feed	Steady State Raffinate	Steady State Extract	Percent Removal
formic acid	3,763	184	3,657	95.2
methanol	411	412	79	1.8
acetaldehyde	231	156	131	33.9
ethanol	502	426	172	16.9
acetonitrile	747	503	428	34.0
acetone	1,620	1,374	980	17.4
acetic acid	49,360	9,186	64,500	81.4
n propanol + MEK	389	170	393	57.2

(continued)

TABLE 27. (continued)

Component	Water Feed	Steady State Raffinate	Steady State Extract	Percent Removal
2-butanol	459	122	551	74.0
1-butanol	411	49	562	88.3
Benzene + unknown	242	~0	484	100.0

b. Acid/Base Titration - 1st Steady State

steady state water feed: 0.904 g·equivalents/liter
steady state raffinate: 0.157 g·equivalents/liter
steady state extract: 0.958 g·equivalents/liter
steady state removal of acid = 82.6%

c. COD Analysis - 1st Steady State

	COD	TOD	TOD/COD
water feed	57000	63600	1.10
raffinate (centrifuged)	22800	15900	

% COD removal = 60%

a. Gas Chromatograph (ppm) - 2nd Steady State

Component	Water Feed	Steady State Raffinate	Steady State Extract	Percent Removal
formic acid	3,763			
methanol	411	384	25	6.6
acetaldehyde	231	122	63	47.2
ethanol	502	396	111	21.1
acetonitrile	747	406	128	45.6
acetone	1,620	1,225		24.5
acetic acid	49,360	5,814	65,060	88.0
n prop + MEK	389	145	204	62.7
2-butanol	459	116	364	74.7
1-butanol	411	22	435	94.6
benzene + unknown	242	~0	211	100.0

(continued)

TABLE 27. (continued)

b. Acid/Base Titration - 2nd steady state

steady state water feed: 0.904 g·equivalents/L

steady state raffinate: 0.114 g·equivalents/L

steady state extract 0.798 g·equivalents/L

steady state removal of acid = 87.4

TABLE 28. CONDITIONS AND RESULTS FOR MINIPLANT RUN 11

Conditions

Solvent: 50:50 (by volume) Alamine 336 and Diisobutyl ketone (DIBK)

Wastewater: G

Flow rates: water feed: 1.25 liter/h = 1.25 kg/h

solvent feed: 1.22 liter/h = 1.00 kg/h

raffinate: 1.21 liter/h = 1.21 kg/h

extract: 1.25 liter/h = 1.02 kg/h

Solvent-to-water ratio: 0.80 kg/kg

Solvent density: 0.818 kg/L

Extraction Factor (Acetic Acid): K_D Fs/Fw = 2.64, K_D = 3.3 (at 5% wt% Acetic Acid)

Shaft Speed: 1000 RPM

Column pressure (top): Atmospheric

Rotor disc diameter: 3.81 cm

Stator hole diameter: 5.72 cm

Estimated solvent hold-up: 0.022

Height of mass transfer zone: 78.5 cm

Run time: 5h

Results of Analysis

a. Gas Chromatograph

	Interface	feed	steady state raffinate	steady state extract	Removal %
Formic Acid	- ppm	3760 ppm	- ppm	- ppm	∿100.%

(continued)

TABLE 28. (continued)

Results of Analysis (continued)

	Interface	feed	steady state raffinate	steady state extract	Removal %	steady state non-closure %
Methanol	407	411	400	64	5.6	-6.9
Acetaldehyde	145	231	154	50	35.5	+17.8
Ethanol	464	502	450	123	13.2	-6.8
Acetonitrile	604	747	556	259	29.0	-0.3
Acetone	1721	1620	1413	711	15.6	-20.2
Acetic Acid	23,222	49,360	13,560	47,760	73.4	-5.5
n-prop +MEK	253	389	246	312	38.8	-26.7
2-butanol	216	459	188	410	60.4	-12.5
1-butanol	121	411	68	401	84.0	+4.4
unknown (Benzene + other)	0	242	-	386	100.0	-30.1

b. Acid/Base Titration

Steady State:

water feed: 0.904 g. equivalents/liter

solvent feed: 0.0 g. equivalents/liter

raffinate: 0.204 g. equivalents/liter

extract: 0.715 g. equivalents/liter

interface: 0.312 g. equivalents/liter

(continued)

TABLE 28. (continued)

Run 11 (continued)

Steady state removal of acid: 78.2%

Steady state acid non-closure: -0.7%

c. Jump ratio: $\frac{C_F - C_{interface}}{C_F - C_{outlet}} = 0.846$

d. Entrainment:

DIBK = 360 ppm

Alamine 336 = 275 ppm

TABLE 29. RESULTS FOR MINIPLANT RUN 12

Conditions

Solvent: 50:50 (by volume) Alamine 336 and DIBK

Wastewater: G

Flow rates: water feed: 1.26 liter/hr = 1.26 kg/hr

solvent feed: 1.26 liter/hr = 1.00 kg/hr

raffinate: 1.21 liter/hr = 1.21 kg/hr

extract: 1.21 liter/hr = 0.99 kg/hr

Solvent-to-water ratio: .79 kg/kg

Solvent density: .816 kg/L

Extraction Factor (Acetic Acid): K_D Fs/Fw = 2.64

Shaft Speed: 580 RPM

Column Pressure: Atmospheric

Rotor disc diameter: 3.81 cm

Stator hole diameter: 5.72 cm

Estimated Solvent hold-up: 0.011

Height of mass transfer zone: 81.0 cm

Run time: 5h

Results of Analysis

a. Gas Chromatograph

	feed	steady state raffinate	steady state extract	Inter-face	Removal %
Formic Acid	3760 ppm	- ppm	- ppm	- ppm	
Methanol	411	409	58	407	4.4

(Continued)

TABLE 29. (continued)

Results of Analysis (continued)

	feed	steady state raffinate	steady state extract	Inter-face	Removal %
Acetal-dehyde	231	162	61	187	32.5
Ethanol	502	448	109	459	14.3
Acetoni-trile	747	581	261	614	25.3
Acetone	1620	1288	708	1430	23.6
Acetic Acid	49,360	20,770	45,176	27,600	59.6
n-prop MEK	389	234	233	309	42.2
2-butanol	459	194	351	280	59.4
1-butanol	411	73	432	159	82.9
unknown (Benzene + other)	242	0	410	0	100.

b. Acid/Base Titrations

steady state:

water feed: 0.904 g. equivalent/liter

solvent feed: 0.078 g. equivalent/liter

raffinate: 0.304 g. equivalent/liter

extract: 0.671 g. equivalent/liter

interface: 0.450 g. equivalent/liter

steady state acid removal: 67.7%

(Continued)

TABLE 29. (continued)

Run 12 (continued)

c. Jump ratio: $\frac{C_F - C_{interface}}{C_F - C_{outlet}} = 0.757$

d. Entrainment:

DIBK = 9 ppm

Alamine 336 = 38 ppm

TABLE 30. CONDITIONS AND RESULTS FOR MINIPLANT RUN 13

Conditions

Solvent: 50:50 (by volume) Alamine 336 and DIBK

Wastewater: G

Flowrates: water feed: 1.26 liter/hr = 1.26 kg/hr

solvent feed: 1.23 liter/hr = 1.00 kg/hr

raffinate: 1.23 liter/hr = 1.23 kg/hr

extract: 1.30 liter/hr = 1.06 kg/hr

Solvent-to-water ratio: .79 kg/kg

Solvent density: 0.816 kg/liter

Extraction Factor (Acetic Acid): K_D Fs/Fw = 2.64

Shaft speed: 720 ppm

Column pressure: Atmospheric

Rotor disc diameter: 3.81 cm

Stator hole diameter: 5.72 cm

Estimated solvent hold-up: 0.011

Height of mass transfer zone: 75.5

Run time: 3h

Results of Analysis:

a. Gas Chromatograph

	feed	steady state raffinate	steady state extract	Inter-face	Removal %
Formic Acid	3760 ppm	- ppm	- ppm	- ppm	
Methanol	411	378	49	424	10.2

(Continued)

TABLE 30. (continued)

Results of Analysis (continued)

	feed	steady state raffinate	steady state extract	Inter-face	Removal %
Acetal-dehyde	231	151	63	186	36.2
Ethanol	502	428	120	481	16.8
Acetoni-trile	747	551	251	639	27.9
Acetone	1620	1193	680	1377	28.1
Acetic Acid	49,360	21,770	42,510	31,557	56.9
n-prop +MEK	389	134	275	318	66.3
2-butanol	459	173	441	291	63.2
1-butanol	411	64	397	145	84.8
unknown (Benzene + other)	242	0	388	0	100.0

b. Acid/Base Titration

steady state:

water feed: .904 g. equivalents/liter

solvent feed: 0.0 g. equivalents/liter

raffinate: 0.285 g. equivalents/liter

extract: 0.659 g. equivalents/liter

interface: 0.441 g. equivalents/liter

steady state acid removal: 69.2%

(continued)

TABLE 30. (continued)

Run 13 (continued)

c. Jump ratio: $\frac{C_F - C_{interface}}{C_F - C_{outlet}} = 0.748$

d. Entrainment:

DIBK = 0 ppm

TABLE 31. MINIPLANT RUN 14

Conditions

Solvent: 50:50 (by volume) Alamine 336 and DIBK

Wastewater: G

Flowrates: water feed: 1.21 liter/hr = 1.21 kg/hr

solvent feed: 1.22 liter/hr = 1.00 kg/hr

raffinate: 1.15 liter/hr = 1.15 kg/hr

extract: 1.26 liter/hr = 1.03 kg/hr

Solvent-to-water ratio: .83 kg/kg

Solvent density: 816 kg/L

Extraction Factor (Acetic Acid) K_D Fs/Fw =2.74

Shaft speed: 850 RPM

Column pressure: Atmospheric

Rotor disc diameter: 3.81 cm

Stator hold diameter: 5.72 cm

Estimated solvent hold-up: .008

Height of mass transfer zone: 74.8 cm

Run time: 4h

Results of Analysis

a. Gas Chromatograph

	feed	steady state raffinate	steady state extract	Inter-face	Removal %
Formic Acid	- ppm	- ppm	- ppm	- ppm	
Methanol	376	391	43	391	1.2

(continued)

TABLE 31. (continued)

Results of Analysis (continued)

	feed	steady state raffinate	steady state extract	Inter-face	Removal %	steady state non-closure %
Acetal-dehyde	175	151	75	180	18.0	-18.5
Ethanol	523	414	167	419	24.8	-2.4
Acetoni-trile	675	510	255	579	28.2	-4.0
Acetone	1610	1428	635	1269	15.7	-17.9
Acetic Acid	47,850	14,675	45,700	21,415	70.9	-10.5
n-prop +MEK	424	191	298	227	57.2	-2.6
2-butanol	497	192	386	243	63.3	-2.8
1-butanol	389	95	401	142	76.8	-11.0
unknown (Benzene + other)	243	0	273	0	100.	-4.4

b. Acid/Base Titration

steady state:

water feed: .898 g. equivalents/liter

solvent feed: .016 g. equivalents/liter

extract: .662 g. equivalents/liter

raffinate: .241 g. equivalents/liter

interface: .377 g. equivalents/liter

steady state acid removal: 74.5%

steady state acid non-closure: +0.4%

(continued)

TABLE 31. (continued)

Run 14 (continued)

c. Jump Ratio: $\frac{C_F - C_{interface}}{C_F - C_{outlet}} = .792$

d. Entrainment:

DIBK = 131 ppm

TABLE 32. CONDITIONS AND RESULTS FOR MINIPLANT RUN 15

Conditions

Solvent: 50:50 (by volume) Alamine 336 and DIBK

Wastewater: G

Flowrates: water feed: 1.25 liter/h = 1.25 kg/h

solvent feed: 1.26 liter/h = 1.00 kg/h

raffinate: 1.18 liter/h = 1.18 kg/h

extract: 1.28 liter/h = 1.06 kg/h

Solvent-to-water ratio: 0.80

Solvent density: .818 kg/L

Extraction Factor: K_D Fs/Fw = 2.64

Shaft speed: 530 RPM

Column pressure: Atmospheric

Rotor disc diameter: 4.45 cm

Stator hole diameter: 5.08 cm

Estimated solvent hold-up: .028

Height of mass transfer zone: 74.8 cm

Run time: 4.5h

Results of Analysis

a. Acid/Base Titration

steady state:

water feed: .935 g. equivalents/liter

solvent feed: .010 g. equivalents/liter

(continued)

TABLE 32. (continued)

Results of Analysis

steady state (continued)

raffinate: .214 g. equivalents/liter

extract: .691 g. equivalents/liter

interface: .396 g. equivalents/liter

steady state acid removal: 78.4%

steady state acid non-closure: +2.4%

b. Jump Ratio: $\frac{C_F - C_{interface}}{C_F - C_{outlet}} = .748$

c. Entrainment:

DIBK = 108 ppm

TABLE 33. CONDITIONS AND RESULTS FOR MINIPLANT RUN 16

Conditions

Solvent: 50:50 (by volume) Alamine 336 and DIBK

Wastewater: G

Flowrates: water feed: 3.0 liter/h = 3.0 kg/h

solvent feed: 2.9 liter/h = 2.4 kg/h

raffinate: 2.8 liter/h = 2.8 kg/h

extract: 3.1 liter/h = 2.6 kg/h

Solvent-to-water ratio: 0.80 kg/kg

Solvent density: .818 kg/L

Extraction Factor: K_D Fs/Fw = 2.64

Shaft speed: 530 rpm

Column pressure: Atmospheric

Rotor disc diameter: 4.45 cm

Stator hole diameter: 5.08 cm

Estimated solvent hold-up: .029

Height of mass transfer zone: 74.8 cm

Run time: 3h

Results of Analysis

a. Acid/Base Titrations

steady state:

water feed: .935 g. equivalents/liter

solvent feed: .010 g. equivalents/liter

(continued)

TABLE 33. (continued)

Results of Analysis

steady state (continued)

raffinate:	.191	g. equivalents/liter
extract:	.715	g. equivalents/liter
interface:	.419	g. equivalents/liter

steady state acid removal: 80.9%

steady state acid non-closure: +0.7%

b. Jump Ratio: $\frac{C_F - C_{interface}}{C_F - C_{outlet}} = .694$

c. Entrainment:

DIBK = 265 ppm

TABLE 34. CONDITIONS AND RESULTS FOR MINIPLANT RUN 17

Conditions

Solvent: 50:50 (by volume) Alamine 336 and DIBK

Wastewater: G

Flowrates: water feed: 3.53 liter/h = 3.53 kg/h

solvent feed: 3.45 liter/h = 2.82 kg/h

raffinate: 3.35 liter/h = 3.35 kg/h

extract: 3.58 liter/h = 2.93 kg/h

Solvent-to-water ratio: 0.80 kg/kg

Solvent density: 0.818 kg/L

Extraction Factor (Acetic Acid): K_D Fs/Fw = 2.64

Shaft speed: 530 RPM

Column pressure: Atmospheric

Rotor disc diameter: 4.45 cm

Stator hole diameter: 5.08 cm

Estimated solvent hold-up: 0.020

Height of mass transfer zone: 74.8 cm

Run time: 4h

Results of Analysis

a. Acid/Base Titrations

steady state:

water feed: 0.937 g. equivalents/liter

solvent feed: 0.010 g. equivalents/liter

(continued)

TABLE 34. (continued)

Results of Analysis

steady state (continued)

raffinate: 0.220 g. equivalent/liter

extract: 0.705 g. equivalent/liter

interface: 0.459 g. equivalent/liter

steady state acid removal: 77.7%

steady state acid non-closure: -1.4%

b. Jump ratio: $\frac{C_F - C_{interface}}{C_F - C_{outlet}} = 0.67\%$

c. Entrainment:

DIBK = 427 ppm

TABLE 35. CONDITIONS AND RESULTS FOR MINIPLANT RUN 18

Conditions

Solvent: 50:50 (by volume) Alamine 336 and DIBK

Wastewater: G

Flowrates: water feed: 2.93 liter/h = 2.93 kg/hr

solvent feed: 2.87 liter/h = 2.34 kg/hr

raffinate: 2.81 liter/h = 2.81 kg/hr

extract: 2.99 liter/h = 2.45 kg/hr

Solvent-to-water ratio: 0.80 kg/kg

Solvent density: 0.816 kg/L

Extraction Factor (Acetic Acid): K_D Fs/Fw = 2.64

Shaft speed: 460 RPM

Column pressure: Atmospheric

Rotor disc diameter: 4.45 cm

Stator hole diameter: 5.08 cm

Estimated solvent hold-up: 0.026

Height of mass transfer zone: 74.8 cm

Run time: 3.5h

Results of Analysis

a. Acid/Base Titrations

steady state:

water feed: .942 g. equivalents/liter

solvent feed: .009 g. equivalents/liter

(continued)

TABLE 35. (continued)

Results of Analysis

steady state (continued)

raffinate: .253 g. equivalents/liter

extract: .666 g. equivalents/liter

interface: .495 g. equivalents/liter

steady state acid removal: 74.2%

steady state acid non-closure: +2.1%

b. Jump Ratio: $\frac{C_F - C_{interface}}{C_F - C_{outlet}} = .649$

c. Entrainment:

DIBK = 186 ppm

TABLE 36. CONDITIONS AND RESULTS FOR MINIPLANT RUN 19

Conditions

Solvent: 50:50 (by volume) Alamine 336 and DIBK

Wastewater: G

Flowrates: water feed: 3.0 liter/h = 3.0 kg/h

solvent feed: 2.96 liter/h = 2.4 kg/h

raffinate: 2.84 liter/h = 2.84 kg/h

extract: 2.98 liter/h = 2.44 kg/h

Solvent-to-water ratio: 0.80 kg/kg

Solvent density: .818 kg/L

Extraction Factor (Acetic Acid): K_D Fs/Fw = 2.64

Shaft speed: 530 RPM

Column pressure: Atmospheric

Rotor disc diameter: 4.45 cm

Stator hole diameter: 5.08 cm

Estimated solvent hold-up: 0.026

Height of mass tranfer zone: 74.8 cm

Run time: 4.5h

Results of Analysis

a. Acid/Base Titration

steady state:

water feed: .934 g. equivalents/liter

solvent feed: .009 g. equivalents/liter

(continued)

TABLE 36. (continued)

Results of Analysis

steady state (continued)

raffinate: .224 g. equivalents/liter

extract: .739 g. equivalents/liter

Interface: .472 g. equivalents/liter

steady state acid removal: 77.3%

steady state acid non-closure: 0.0%

b. Jump Ratio: $\frac{C_F - C_{interface}}{C_F - C_{outlet}} = .651$

c. Entrainment:

DIBK = 178 ppm

Alamine 336 = 145 ppm

SECTION 7

EXTRACTION PROCESSES FOR ACETIC ACID RECOVERY

This Section examines in detail the impact of a number of different factors on the process design and costs. Emphasis is on extraction processes for selective recovery of acetic acid from wastewaters not containing chlorinated acetaldehydes. The presence of chlorinated acetaldehydes in the Wacker-process wastewaters results in some special problems which are discussed in Section 8.

SOLVENT VOLATILITY CONSIDERATIONS

As noted earlier, solvent-regeneration is often the most costly step in an extraction process. Distillation is the most common regeneration method. If the solvent is to be distilled, its volatility is a major design consideration, affecting both the overall process configuration and the process energy consumption.

In the past, lower-boiling solvents such as ethyl acetate [Normal Boiling Point (NBP) = 77°C] have been favored for acetic acid recovery (Brown, 1963; Eaglesfield, et al., 1953). A typical process configuration is shown in Figure 11. Note that water, solvent, and any volatile solvents co-extracted with acetic acid are separated from the acetic acid in a single distillation step (the dehydration column).

Figure 12 shows the typical configuration for a process using a higher-boiling solvent. A two-step regeneration is necessary. The first step removes water and any volatile solutes that would otherwise contaminate the acetic acid product. The second separates acetic acid from the solvent.

The lower-boiling solvents have the following general advantages: (1) Since the solvent is taken overhead, it is continuously separated from soluble, non-volatile contaminants. (2) The distillation system operates at low temperatures, so reboiler energy can be supplied by low-pressure steam or possibly by low-level heat from another process stream. The maximum temperature is 118°C at

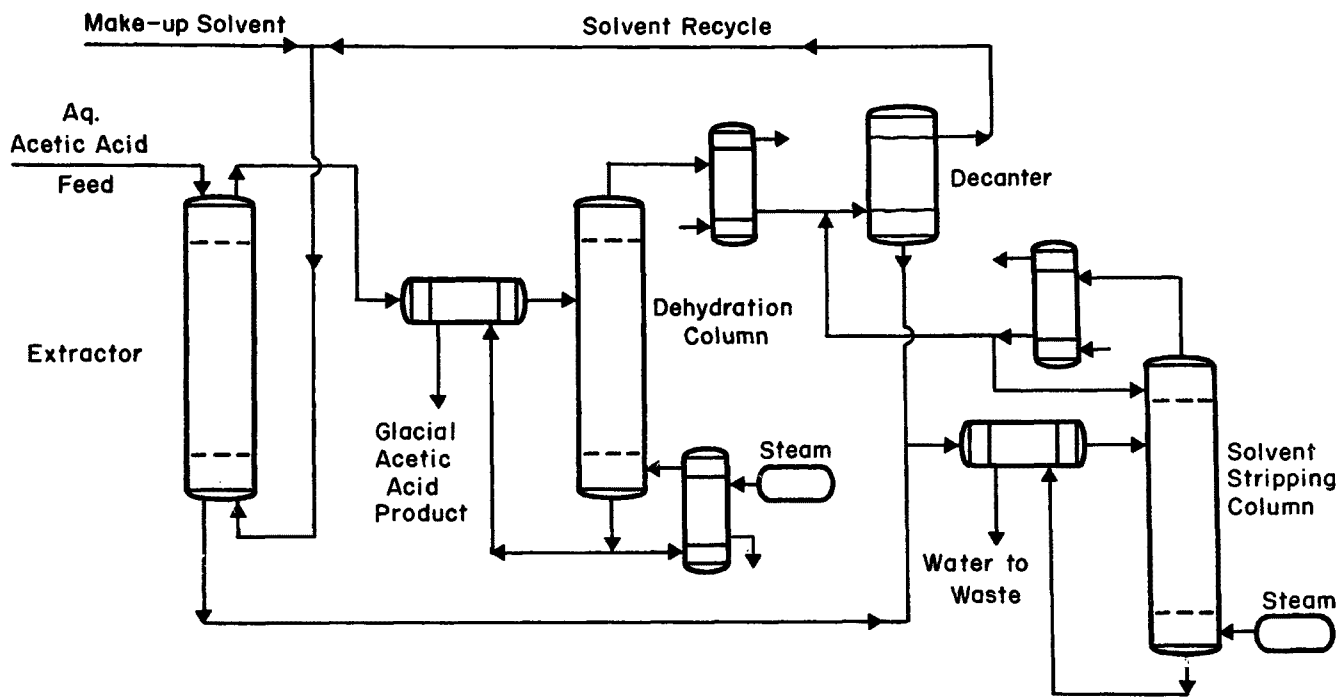

Figure 11. Extraction of acetic acid with a lower-boiling solvent.

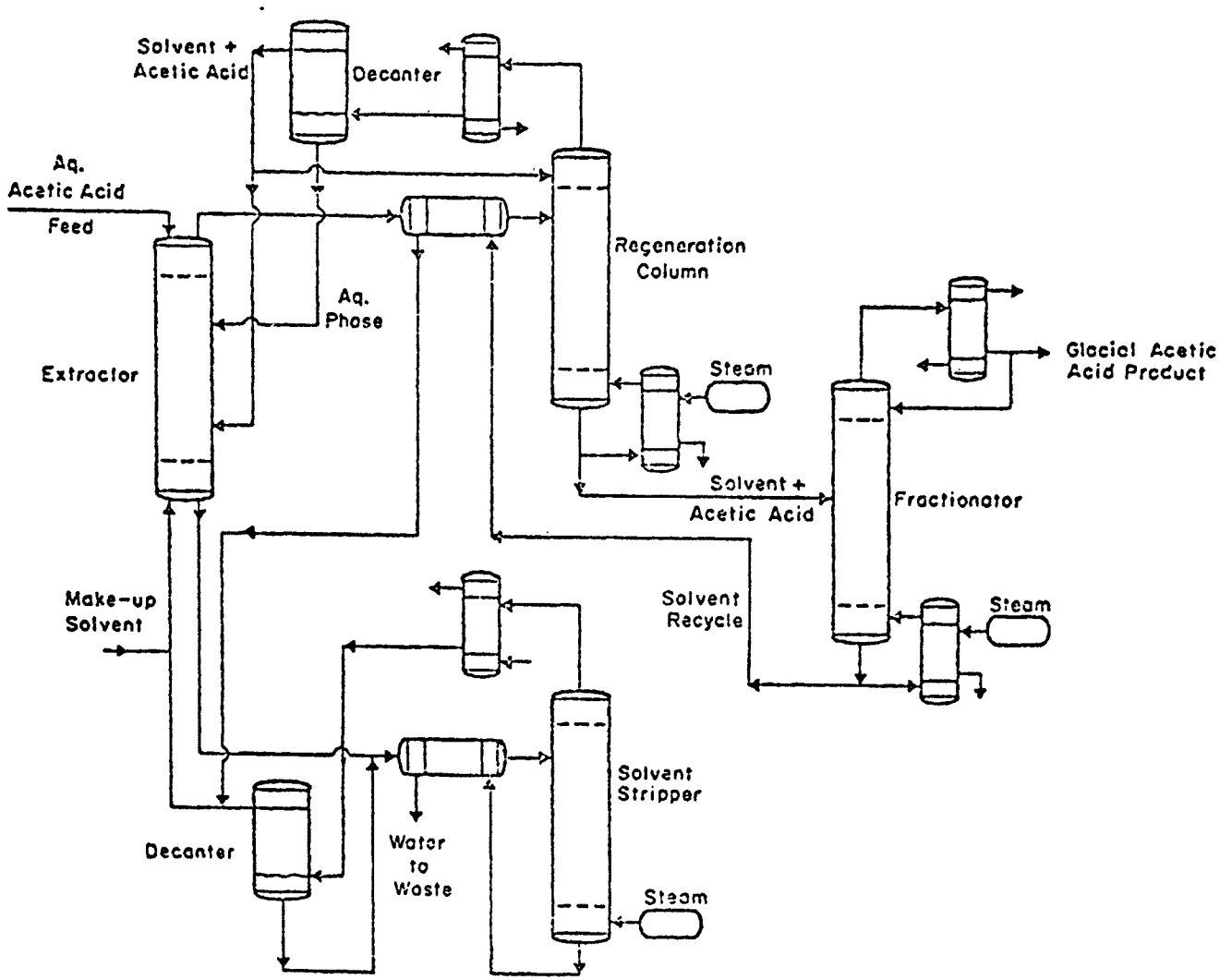

Figure 12. Extraction of acetic acid with a higher-boiling solvent.

atmospheric pressure if the bottom product is mainly acetic acid. (3) The process is relatively simple, requiring one less regeneration step than that for higher-boiling solvents. However, if non-volatile solutes are co-extracted with acetic acid, the acid product shown in Figure 11 may require additional purification, depending on its intended end-use. In this work, it was assumed that the extraction process need not produce high-purity acid, because the recovered acid could be recycled to the main separation system in the acetic-acid production facility for final purification.

The higher-boiling solvents have advantages as well. One possible advantage is a higher K_D, as discussed in the next section. Other advantages of higher-boiling solvents, independent of K_D considerations, are: (1) the process shown in Figure 12 can produce a high-purity acid product (not important in this work), and (2) the solvent is the bottom product in the distillation. In a wastewater-extraction process, the solvent is the major component (typically about 90 wt.%) in the feed to the regeneration system. If the solvent is the overhead product, as for lower-boiling solvents, larger condensers and reboiler duties and a larger column diameter are required.

The relative volatility of the solvent to the solute is another important consideration. If possible, the solvent should be either much more or much less volatile than the solute to be considered; this reduces the number of stages, the tower diameter, and the energy required to effect the distillation. The relative volatility should be at least 2.0 and preferably much higher. Ethyl acetate is a good choice in this respect, since its volatility relative to acetic acid is approximately 3.5 at atmospheric pressure. Higher-boiling solvents can provide similar separation factors with, however, the disadvantage of higher operating temperatures or vacuum operation.

The separation factors for regeneration of amine extractants are determined mainly by the choice of the diluent. For process design, separation factors had to be measured experimentally since no data were available and the systems are too non-ideal to allow prediction by standard correlations. Results of such measurements are given elsewhere (Ricker, 1979; Ricker et al, 1979b).

SOLVENT K_D AND SELECTIVITY

Many solvents have acceptable volatilities for the regeneration step in an acetic-acid extraction process,

but very few exhibit attractive K_D values in the extraction step. Large K_D values are advantageous, up to K_D values of about 20.0 (Earhart, et al., 1977). Unfortunately, K_D values for acetic-acid extraction are usually on the order of 1.0, or less.

Low K_D values are especially typical of the lower-boiling solvents. As discussed in Section 6, higher K_D values are usually the result of a specific, chemical interaction between the extractant and the solute. If the extractant is volatile, i.e., its molecular weight is low, the extractant-acetic acid complex is almost certain to be too water-soluble for practical applications (Wardell and King, 1978). Consequently, only the weakly-interacting solvents in the lower-boiling class (e.g., ethyl acetate) can be considered).

Higher-molecular-weight organics, on the other hand, can be insoluble in water and yet have a specific strong attraction for acetic acid. Examples are certain amines and organophosphorus compounds. These provide higher K_D values and good selectivity for acidic compounds, which simplifies purification of the extracted solute.

SOLVENTS SELECTED FOR DETAILED PROCESS-DESIGN STUDY

Based on the above factors and on the data presented in Section 6 the following specific solvents were chosen for a detailed process-design study:

1. ethyl acetate, to represent the class of lower-boiling solvents;
2. cyclohexanone, a weakly-interacting, higher-boiling solvent;
3. Alamine 336 (tertiary C_8-C_{10} amine) diluted with DIBK, a novel extractant in the strongly-interacting, higher-boiling class; and
4. TOPO a semi-commercialized, strongly-interacting, higher-boiling extractant.

The TOPO diluent was assumed to be 2-heptanone. Reasons for selection of amine and TOPO diluents are discussed in a subsequent section.

The purpose of the design study was to quantify the effects of various solvent properties and process-design alternatives. Approximate design methods were used because data were scarce and rapid evaluation of many alternatives was considered more important than rigorous design. Accuracy of equipment costs is estimated to be ± 30%.

COST ESTIMATES

Estimated Direct Fixed Capital

Plant capital-investment estimates made extensive use of the cost curves and the "process module" technique proposed by Guthrie (1969). Cost data for special types of heat exchangers and other miscellaneous equipment items came from other sources, such as Woods, et al. (1975) and Peters and Timmerhaus (1968). Costs were adjusted to January, 1978, using a Marshall & Stevens cost index of 520. Expected accuracy is ± 30%.

It was necessary to make a number of assumptions in order to establish process enthalpy and material balances and to size the equipment. For example, determination of the extractor size and solvent flowrate for a given wastewater required specification of the wastewater flowrate, the percent recovery of pollutant desired and an assumption regarding the optimum trade-off between running the extractor near the minimum solvent rate to reduce energy costs vs. a high rate to reduce the extractor cost. Heuristics were usually used rather than full cost optimizations in such cases, due to the large uncertainties in the costs. In sizing extraction equipment, for example, the design solvent rate was 1.5 times the minimum solvent rate as recommended by Happel and Jordan (1975), whose recommendations for equipment sizing for preliminary cost estimates were very useful for other capital items as well.

After sizing, cost diagrams from Guthrie (1969) and other sources were used to determine costs of major equipment items. Multiplication by the module factors recommended by Guthrie gave the total installed cost. These were increased by 18% to account for contingency plus contractor's fee. Costs for off-site development, buildings, working capital, incremental investment for steam, power, and cooling capacity, were assumed negligible. The total of the above equipment costs is the "direct fixed capital" (DFC).

Operating Costs

The plant design stream time is 8000 hours/year.

The following items make up the annual operating costs:

1. Cost of Chemicals--Solvent make up (for losses to the product water due to upsets, degradation reactions, and to incomplete recovery in the regeneration step) was charged at the market price for the solvent.
2. Utilities--as estimated by Petterson and Wells (1977) for the year 1979-80:

utility	cost
fuel	\$2.86/GJ (\$3.00/10^6 BTU)
high pressure steam (1500 psig)	\$3.17/GJ (\$3.33/10^6 BTU)
low pressure steam (50 psig)	\$1.52/GJ (\$1.60/10^6 BTU)
cooling water, 30°F rise	\$0.56/GJ (\$0.48/10^6 BTU)
electrical power	\$0.03/KWH

3. Maintenance and Repairs--annual cost of 6% of DFC.
4. Operating Supplies--annual cost of 15% of maintenance and repairs.
5. Depreciation--annual cost of 8% of DFC.
6. Insurance and Taxes--annual cost of 3% of DFC.

The above costs are summarized in the following equation: annual operating costs = chemicals + utilities + 0.18 DFC. Other operating costs (e.g., operating labor and laboratory charges) could have been included but were not because an accurate estimation method was not apparent, as discussed by Earhart, et al (1976). They points out that these could amount to an additional charge to the process of as much as \$0.16/m^3 wastewater processed, which is not negligible. However, these costs depend primarily on the wastewater flowrate and would not change appreciably from one process alternative to the next, so their exclusion should not affect the relative evaluation of alternatives.

A detailed example of cost estimation and design for one case is given elsewhere (Ricker, 1979).

Assumptions for Cost Estimates

The major assumptions used in the cost estimates are the following:

1. The design capacity was 22,700 kg/h (100 GPM) of butane-oxidation wastewater G. This seemed to be an appropriate capacity, based on published data giving the amount of wastewaters produced per unit of acetic

acid production (Sittig, 1974); such a capacity would be typical of large-scale treatment facility.

2. The extraction system was designed to recover 99% of the acetic acid from the feed stream. This recovery value was selected as a practical upper limit so as to provide a large reduction in the COD due to the acetic acid. As will be shown later, a lower recovery, say 95%, would probably be selected if recovery of the acid for profit were the only motive for installation of the process.

3. In general, constant separation factors were assumed in the extractors and distillation equipment. For separations in which a large variation in the separation factor was expected within the equipment, as in the azeotropic separation of ethyl acetate and water from acetic acid, a limiting value of the separation factor was used to calculate the energy requirements, and the size of the equipment was adjusted to reflect the higher values that applied to certain sections of the separation device. However, in the extractor calculations for the Alamine 336/DIBK system, the change in K_D with acetic acid concentration was accounted for in a rigorous manner.

   Limiting relative volatility and K_D values are given in Table 37; these are from published or measured data, if available. The data for the ethyl acetate and cyclohexanone systems are well-established, and accuracy is probably on the order of 5%. The data for the amine and TOPO systems are less reliable, since K_D, solubilities, and vapor-liquid equilibria can vary greatly with changes in process variables. Large inaccuracies, on the order of 50% are conceivable.

4. The extractor is a sieve-tray column, chosen because it can be designed more reliably than other types of differential contactors (Treybal, 1963). An agitated-column extractor, such as an RDC, might be preferable in a full-scale process, because the extraction is relatively difficult and requires approximately 10 equivalent equilibrium stages for a 99% recovery. A mixer-settler cascade might also be considered.

5. To keep solvent loss to a minimum, the acetic-acid product from the regeneration column was to contain no more than 0.1 wt.% solvent (or diluent in the case of the amine and TOPO systems). The regenerator bottom product was to contain acetic acid equivalent to one-half

TABLE 37. KEY SOLVENT PROPERTIES USED IN DESIGN STUDY

Solvent	K_D	Solubility (wt. %) in H_2O	H_2O in	α	Price ($/kg)
ethyl acetate[1,3]	1.05	7.1	3.5	3.9	0.53
cyclohexanone[1,3]	1.45	2.4	7.0	0.33	0.66
50% Alamine 336 in DIBK	1.0*	>10 ppm 0.06	0.6	0.30	2.42 0.66
40% TOPO in[3] 2-heptanone	1.5	>1 ppm 0.10	1.0	0.29	22.0

α is the limiting solvent/acetic acid relative volatility

References

1. Eaglesfield, et al. (1953)

2. Garner, et al (1954)

3. Michaels (1977)

* This is the value at the intermediate pinch-point (see Ricker, 1978, and Ricker, et al, 1979b).

that in equilibrium with the acid in the extractor raffinate, so as to provide an adequate mass-transfer driving force at the lean end of the extractor.

6. The extractor raffinate was assumed to be saturated with solvent and the extract saturated with water. Solubilities are given in Table 37. They were assumed independent of wastewater solute concentration, since the solutes were quite dilute.

7. Steam stripping of the raffinate was assumed to produce an aqueous effluent containing less than 50 ppm dissolved solvent. For the TOPO and amine systems, only the diluent was stripped; solubilities of TOPO and amines were assumed to be negligible. The ethyl acetate and cyclohexanone systems use atmospheric strippers, and the remaining two are vacuum-stripping columns.

8. The aqueous effluent was assumed to contain an average of 20 ppm entrained solvent droplets. This is only a rough assumption. Experimental results indicated that the TOPO, amine, and cyclohexanone systems would require more than primary settling by gravity to achieve this level of entrainment. Estimated costs for a coalescer are included in Tables 38-41.

9. The higher-boiling solvents require a purge system to remove soluble non-volatiles from the solvent, as discussed later. The net loss of extractant in the purge system was assumed to be 1 kg/h. The estimated installed cost of the system is included in Tables 38-41.

10. The dehydration system is operated such that the final acetic-acid product contains less than 4.0 wt.% water in all cases.

11. Stainless steel is required for equipment in contact with hot, concentrated acetic acid (Brown, 1963).

12. Steam was assumed to cost \$1.52/GJ (\$1.60/10^6 BTU).

Results of the Design Study

The capital investment, operating cost, and profitability of each alternative are summarized in Tables 38 through 41. Operating costs are given both as a charge per cubic meter of wastewater processed and as an annual cost; depreciation, maintenance, etc., are included. The direct fixed capital (DFC) includes a charge for a one-hour solvent inventory.

TABLE 38. ESTIMATED COST OF EXTRACTION OF ACETIC ACID BY ETHYL ACETATE

Direct-fixed capital (DFC)	k$	% of DFC
extractor (16.2 m x 2.21 m)	185	10.7
solvent-recovery column (15.2 m x 0.692 m)	48	2.8
solvent-regeneration column (27.1 m x 2.56 m)	695	40.1
heat exchange	458	26.4
pumps, drums, tanks	20	1.1
contingency & contractor's fee	308	17.8
solvent inventory	18	1.0
	1732	

Operating costs	k$/yr	$\$/m^3$ wastewater	% of operating
steam (low-pressure)	300	1.65	42
cooling water	90	0.50	13
make-up solvent	10	0.05	1
depreciation, maintenance, etc.	311	1.71	44
	711	3.91	

value of acetic acid recovered = 2846 k$/yr

ROIBT = 123%

TABLE 39. ESTIMATED COST FOR EXTRACTION OF ACETIC ACID BY CYCLOHEXANONE

Direct fixed capital	k$	% of DFC
extractor (16.2 m x 1.99 m)	160	10.6
solvent-recovery column (13.7 m x 1.22 m)	72	4.8
solvent-dehydration column (6.1 m x 1.16 m)	96	6.4
solvent-regeneration column (32.6 m x 1.29 m)	392	26.0
heat exchange	455	30.2
pumps, tanks, drums	18	1.2
coalescer	20	1.3
batch system for solvent purification	10	0.7
contingency & contractor's fee	268	17.8
solvent inventory	15	1.0
	1506	

Operating costs	k$/yr	$/m^3 wastewater	%
steam (low-pressure)	118	0.65	27
cooling water	35	0.19	8
make-up solvent	17	0.09	4
depreciation, maintenance, etc.	271	1.50	61
	441	2.43	

value of acetic acid recovered = 2846 k$/yr

ROIBT = 160%

TABLE 40. ESTIMATED COST FOR EXTRACTION OF ACETIC ACID BY 40% TOPO IN 2-HEPTANONE

Direct fixed capital	k$	% of DFC
extractor (16.2 m x 2.04 m)	169	12.6
solvent recovery column (12.2 m x 0.55 m)	29	2.2
solvent-dehydration column (6.1 m x 0.48 m)	66	4.9
solvent-regeneration column (28.7 m x 1.10 m)	316	23.5
heat exchanger	300	22.4
pumps, tanks, drums	18	1.3
coalescer	20	1.5
batch system for solvent purification	20	1.5
contingency and contractor's fee	198	14.8
solvent inventory	207	15.4
	1342	

Operating cost	k$/yr	$/m^3 wastewater	%
steam (low pressure)	32	0.18	6
cooling water	9	0.05	2
solvent make-up	221	1.22	44
depreciation, maintenance, etc.	242	1.33	48
	504	2.78	

value of acetic acid recovered = 2846 k$/yr

ROIBT = 175%

TABLE 41. ESTIMATED COST FOR EXTRACTION OF ACETIC ACID BY 50% ALAMINE 336 in DIBK

Direct fixed capital	k$	% of DFC
extractor (12.2 m x 2.32 m)	160	13
solvent-recovery column (12.2 m x 0.52 m)	29	2
solvent-dehydration column (6.1 m x 0.71 m)	56	5
solvent-regeneration column (26.8 m x 1.08 m)	308	25
heat exchanger	376	31
pumps, tanks, drums	18	2
coalescer	20	2
batch system for solvent purification	16	1
contingency and contractor's fee	215	18
solvent inventory	17	1
	1215	

Operating costs	k$/yr	$\$/m^3$ wastewater	%
steam (low pressure)	42	0.26	14
cooling water	13	0.08	4
make-up solvent	34	0.21	11
depreciation, maintenance, etc.	219	1.35	71
	308	1.90	

value of acetic acid recovered = 2846 k$/yr

ROIBT = 220%

The return on investment before taxes (ROIBT) is the annual profit before taxes, i.e., the value of recovered acetic acid less operating costs, divided by the DFC. Acetic acid is valued at 80% of the current market price of $0.40/kg (Chem. Market. Rep., 1978) for glacial acetic acid, since the product from the process is only about 95% acetic acid and must be recycled for further purification before it can be marketed.

The height and diameter of the major process vessels are in parentheses following the name of the item. Since approximate design methods were used to size the equipment, these dimensions should be taken as only rough estimates of the values that would be used in a final design.

Costs for extraction by ethyl acetate are based on the process configuration of Figure 11. The regeneration system and steam costs are especially high for ethyl acetate because the solvent is the overhead product in the regeneration step. Even so, a high ROIBT is predicted, due to the relatively high acetic acid concentration in the feed wastewater (approximately 5 wt.%).

Effect of Feed Concentration and Feed Rate

At lower feed concentrations, the ROIBT for the ethyl acetate process is less attractive. Below about 10 wt.%, the operating cost per cubic meter of wastewater and the direct fixed costs (DFC) are nearly independent of the acid feed concentration. Given this approximation, for a certain plant investment and base operating cost, ROIBT varies directly with the feed concentration.

Figure 13 shows the effect of acid feed concentration on ROIBT for base operating costs ranging from $1.0/m^3 to $10.0/m^3 of wastewater. The figure assumes a 22.7 m^3/hr (100 GPM) wastewater feed rate and a DFC of $1,730,000. The ethyl acetate process breaks even at a feed concentration of about 1.3 wt.%; installation of the process is not economically attractive until the feed concentration exceeds about 2.2 wt.% (i.e., where ROIBT is greater than 30%).

Figure 13 can be adjusted for other DFC values by $ROIBT = (ROIBT)_{Fig.13} \cdot (1.73 \times 10^6/DFC)$. Thus, the break-even point for the Alamine 336-DIBK process is at a feed concentration of about 0.5 wt.%, and the ROIBT exceeds 30% at about 1.2 wt.%, i.e., at about one-half the concentration required for the ethyl-acetate process.

The process costs are also a function of the assumed feed rate. Direct-fixed-capital varies with approximately the

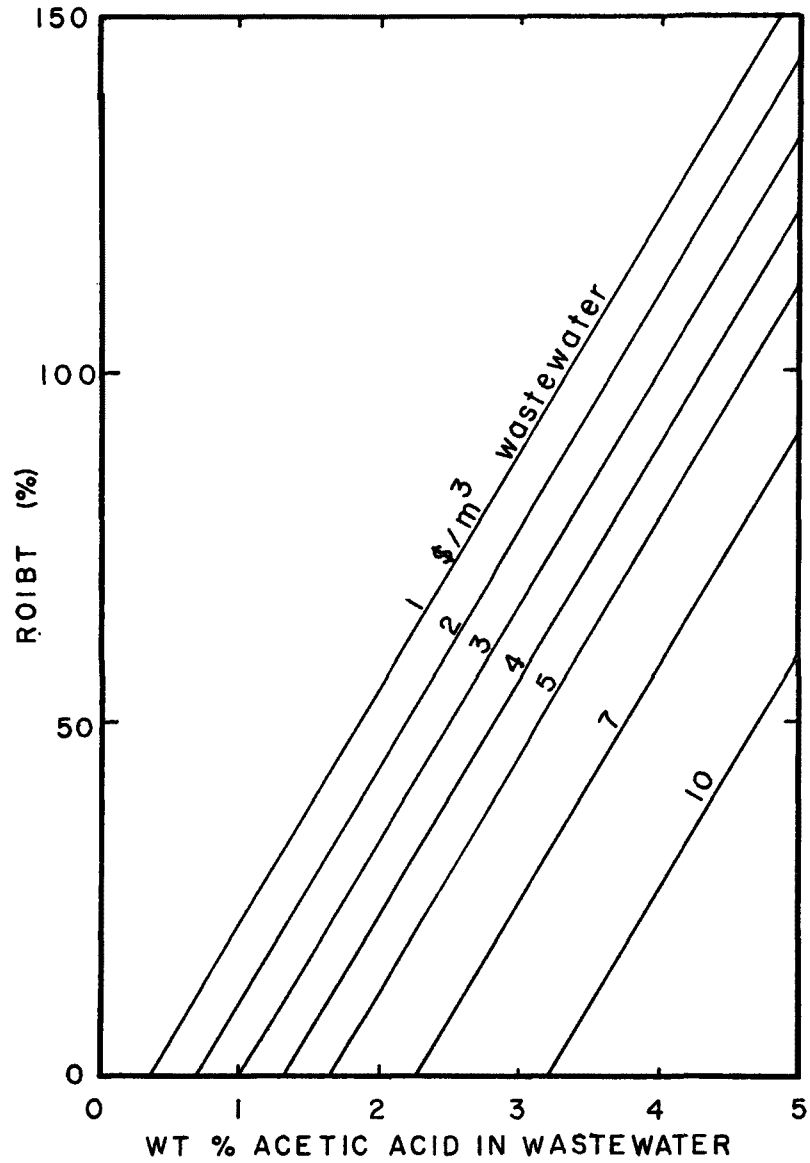

Figure 13. ROIBT for acetic acid recovery vs. concentration of acid in wastewater feed.

0.7 power of plant capacity (Guthrie, 1969), and utilities and solvent make-up vary with capacity. Thus, base DFC and operating costs in Tables 38-41 can be adjusted for capacities other than 22.7 m^3/h by:

$$DFC = (DFC)_{base}(Q/22.7)^{0.7}$$

$$OP = [(OP)_{base}.182,000 - 0.18(DFC)_{base}](Q/22.7) + 0.18(DFC)_{base}(Q/22.7)^{0.7} \quad /(8000\ Q)$$

where DFC and $(DFC)_{base}$ are in dollars, OP and $(OP)_{base}$ are the adjusted and base operating costs in $\$/m^3$ wastewater, and Q is the adjusted capacity in m^3/h. The factor 8,000 is the number of operating hours per year and the factor 0.18 is the fraction of the DFC taken for annual depreciation, maintenance, etc.

If the wastewater feed rate to the ethyl-acetate-extraction process were 2.27 m^3/h, the adjusted DFC would be $346,000 and the adjusted operating cost would be $\$5.63/m^3$. To break even would then require a feed concentration of about 1.8 wt.%, and a 30% ROIBT would require a 3.6 wt.% feed. In general, as the wastewater flowrate decreases, it becomes increasingly difficult to justify acetic acid recovery on an economic basis.

Costs for the remaining solvents in the design study, which are all less volatile than acetic acid, are based on the process configuration of Figure 15, which appears later. Estimated costs are lower than for the ethyl acetate process in each case.

Costs for Extraction with Cyclohexanone

Extraction with cyclohexanone, for example, is estimated to be 40% less expensive than with ethyl acetate. However, in pilot-plant tests, Eaglesfield, et al. (1953), noted that the specific gravity of water-saturated cyclohexanone (0.953) is quite close to that of water and becomes even closer as acetic acid is extracted. This results in low flooding velocities in the extractor and long phase-separation times. Coalescence is also slow due to low interfacial tension, and fairly stable water/solvent emulsions are easily produced under agitation; the extent of these problems is difficult to predict without more extensive testing. The calculation method used to size the extractor (Happel and Jordan, 1975) is more accurate for solvents having specific gravities very different from that of water, and the

estimated extractor cost in Table 39 may be too low.

The properties of cyclohexanone might be improved by the addition of another organic solvent. For example, 50% cyclohexanone in 2-ethyl hexanol gives a K_D of 1.20, i.e., only 18% less than for pure cyclohexanone (Michaels, 1976). The specific gravity of this mixture is about 0.89, and its mutual solubility with water, though not measured by Michaels, should be much lower than for pure cyclohexanone.

Sanchez (1977) attained good acetic-acid removals and encountered no special operating problems with this mixture in an extraction experiment with wastewater F in a miniplant RDC, as shown in Section 6. However, an alcohol is unsuitable for a large-scale process because of its tendency to esterify with acetic acid.

Other solvents might be combined with cyclohexanone to form a mixture with favorable solvent properties. Also, methyl cyclohexanone may be an attractive alternative, as suggested by Eaglesfield, et al. (1953), although it does not seem to be as readily available as cyclohexanone (Lawler, 1977). However, the amine extractant system seemed to offer greater promise, and the use of cyclohexanone and methyl cyclohexanone was not investigated further.

Costs for Extraction with TOPO

It is interesting to compare the cost estimate for TOPO with that for cyclohexanone. The K_D values for acetic-acid extraction are very similar and the estimated acetic acid/solvent relative volatilities are comparable. The TOPO system co-extracts much less water, but this advantage is more than offset by the very high cost of TOPO, as evidenced by the solvent inventory and make-up charges. It should be noted that the make-up charges are very uncertain.

2-Heptanone was selected as the diluent for TOPO because Michaels (1976) found that this combination resulted in higher K_D values than for other common diluents. Alternatively, an aliphatic hydrocarbon, such as that used in the Hydroscience process (Helsel, 1976), would reduce the water content of the extract and might allow elimination of the solvent-recovery stripper. K_D would also decrease, but the overall effect might be to reduce the process costs. A lower concentration of TOPO might also be advantageous, especially since the cost of the solvent would be reduced. However, since the amine extractants seemed to have some significant advantages over TOPO, little attempt was made to optimize the TOPO solvent system.

Comparison of Costs for TOPO and Amine Extractants

Under the assumptions used to develop Tables 38-41, the Alamine 336/DIBK system is about 40% less costly to operate than the TOPO system. The largest factor differentiating the systems is the cost of the extractants. The estimated cost for solvent make-up, for example, is lower for the amine system by a factor of approximately 5.

It should be noted that the cost of TOPO may decrease in the future due to increased production for use in uranium recovery (anon., 1978) and other applications, in which case the operating costs for the TOPO system would compare more favorably with those of the amine system. However, the costs for the Alamine 336 system could also be reduced significantly.

SELECTION OF A DILUENT FOR THE ALAMINE 336 EXTRACTANT

Selection of the diluent for the Alamine 336 extractant is a critical design decision. The acetic acid distribution coefficient and the extractant/water mutual solubility are strong functions of the diluent.

Alcohol diluents provide very favorable extraction equilibria, but are prone to esterification. Ketones, such as 2-heptanone and DIBK, appear to offer the best compromise between extraction equilibria, regenerability, and other important factors.

However, selection of the optimum ketone diluent is not a trivial task. For example, vapor-liquid equilibrium measurements indicate that a C_7 ketone, such as 2-heptanone, would be too volatile for regeneration by distillation at reasonable cost. The presence of the amine in the liquid phase reduces the volatility of acetic acid, so that the diluent must be less volatile than would be necessary if the amine were not present.

The volatility of DIBK is more favorable than that of 2-heptanone. However, the extraction equilibria are less favorable for DIBK, especially for recovery of acetic acid from dilute solutions (i.e., less than 1-2 wt.%). Of the two, DIBK appears to be the better choice, but it is not an ideal one.

Unfortunately, no other potential ketone diluents were tested as extensively as were DIBK and 2-heptanone. There are some interesting possibilities, including cyclohexanone, methyl cyclohexanone, 3-octanone (ethyl amyl ketone, Ashland Chem. Co.), and 2-nonanone (methyl heptyl

ketone, Ashland Chem. Co.). Another approach would be the addition of a third component to the Alamine 336/DIBK system to enhance the extraction equilibria, as discussed in Section 5.

In any case, if a diluent or mixture of diluents could be found that gave extraction equilibria like those shown in Figure 7 for 2-heptanone and yet was as regenerable as DIBK, the DFC of the extraction process of Table 41 would decrease by 33%, the operating cost by 31%, and the profitability, as measured by the ROIBT, would be 326% rather than 220%. The major benefit would be a reduction in the required solvent rate. The search for such a diluent would seem to be an important area for further research.

OPTIMIZATION OF THE ALAMINE 336/DIBK EXTRACTANT SYSTEM

Another way to reduce the cost of the process is to optimize the operating conditions for a given amine/diluent combination. The Alamine 336/DIBK system was optimized with respect to the concentration of amine to be used in the extractant phase, and the recovery of acetic acid to be achieved in the extraction step. Details of this study are given elsewhere (Ricker, 1978; Ricker et al, 1979b).

The optimum amine concentration appeared to be between 30% and 50% by volume. The process costs were found to be a weak function of amine concentration in this range. One would probably choose a concentration at the lower end of the range to minimize the solvent cost. The optimum amine concentration was independent of the concentration of acetic acid in the feed wastewater in the range of 0-5 wt.% acid.

The costs were more sensitive to the design recovery; the optimization procedure showed that from an economic standpoint, the recovery should be on the order of 95-97%, rather than 99%, for a wastewater containing 5 wt. % acetic acid. This would reduce the DFC by about 11% and increase the ROIBT by 5%, compared to the process of Table 41.

For a wastewater containing 1 wt.% acetic acid, the optimum recovery of acid was 86%. Even at the optimum conditions, the ROIBT was only about 29.3% for this wastewater.

A sensitivity analysis was also performed for the 1 wt. % wastewater case to see which solvent parameters had the greatest effect on process costs, (Ricker, 1978; Ricker et al, 1979b). The results showed that the water content of the

extract or the entrainment of extractant could be doubled without changing the costs by more than 6%. However, a change of only 10% in either the limiting K_D for extraction or the acetic acid/diluent relative volatility would have a 6% effect on the costs. This again illustrates the potential for improvement that could be achieved by a better amine/diluent combination. It also suggests that the values of these key parameters should be well established before the design of a full-scale process is attempted.

ALTERNATIVES FOR REGENERATION OF AMINE EXTRACTANT

Since regeneration of the amine extractant by distillation is the most expensive step in the acetic-acid-recovery process, it is worthwhile to consider alternatives to distillation. One possiblity is to back-extract the acetic acid into an aqueous solution of strong base, such as NaOH or sodium carbonate (Na_2CO_3), as shown in Figure 14. Since these are much stronger bases than the free amine, an excess of the aqueous base should strip virtually all of the acid from the organic phase. The operating principle is similar to that used in liquid-ion-exchange processes (Coleman, et al., 1958).

There are several disadvantages to this approach. First, the cost of the base is excessive. For NaOH, the cost would be $12.9/m^3 wastewater, assuming 5 wt.% acid in the wastewater feed and a cost of $0.19/kg for 50% aqueous NaOH (Chem. Market. Rep., 1978). This is much higher than the total cost of the extraction process with regeneration by distillation (Table 41).

Second, the process produces an aqueous sodium acetate solution. The solubility of sodium acetate at 20° is only about 32 wt.% (Perry, 1963). It is unlikely that this solution could be utilized directly, since the market for sodium acetate is much smaller than that for acetic acid (Lawler, 1977). One could consider "springing" the acetic acid by addition of a strong acid, such as sulfuric acid (H_2SO_4), followed by distillation, but this would be even more costly and would produce an undesirable, salty waste stream.

It is interesting to note that the same considerations apply to the recovery of acetic acid from aqueous solution by fixed-bed, anion-exchange processes. After the bed has been loaded with acetic acid, it must be regenerated by stripping with an aqueous base that is stronger than the anion-exchange resin, or by washing with strong acid followed by strong base. Both options

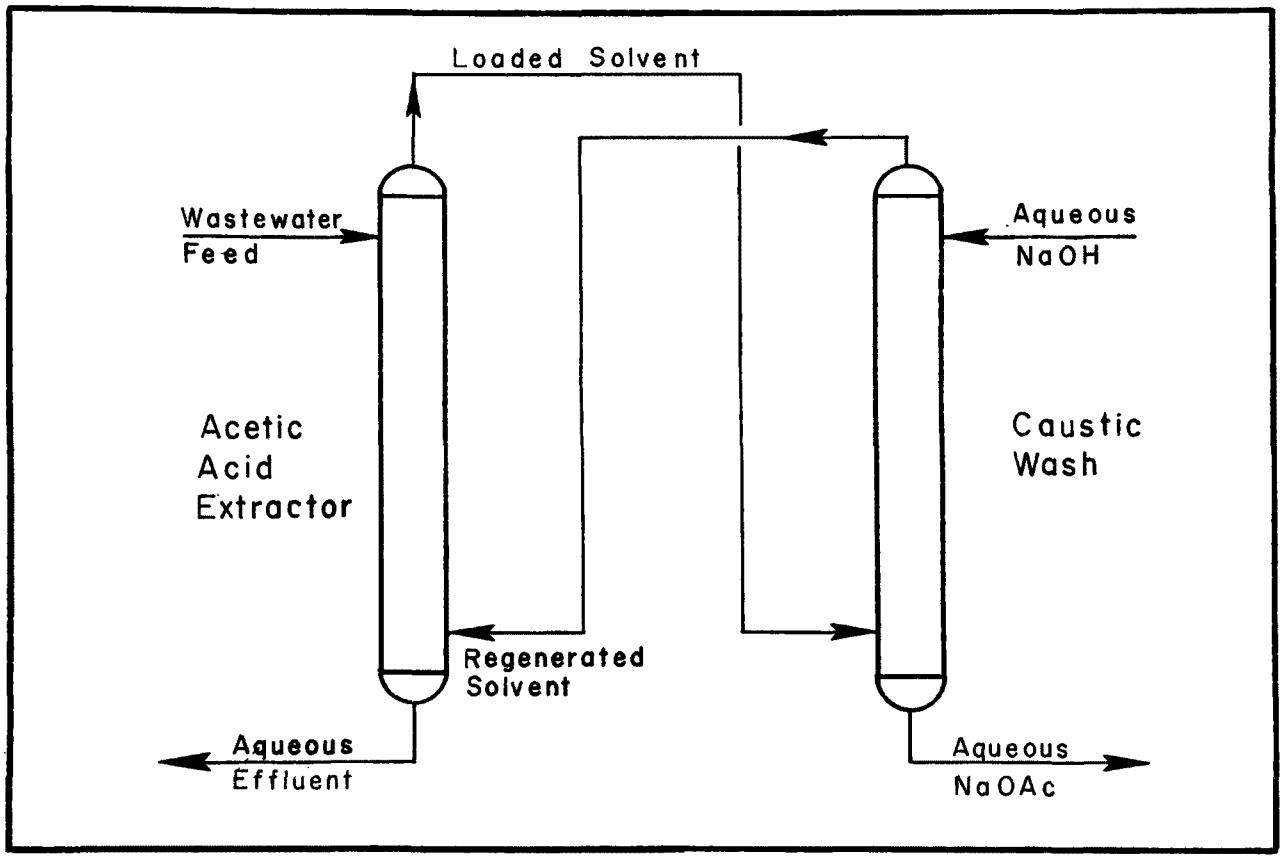

Figure 14. Chemical regeneration of amine extractant by caustic-wash process.

involve chemical consumption and produce either a concentrated aqueous acetate solution or an aqueous acetic acid solution plus an aqueous salt solution, rather than anhydrous acetic acid. One must also contend with the additional problems inherent in fixed-bed processes, e.g., poorer mass-transfer rates, incomplete bed utilization due to solute breakthrough, etc. For some resins, thermal regeneration may be an alternative.

For the amine-extraction process, methods other than chemical regeneration have been considered, e.g., a stripper-absorber system, but even when these are feasible, the methods do not seem to be competitive with distillation. Distillation is relatively simple and does not require the addition of chemicals or produce an additional waste stream; also, its design procedures are well-understood.

LOSS OF SOLVENT--COST AND PREVENTION

Loss of solvent can have a very detrimental effect on the economics of an extraction process, especially if the solvent is costly. Effective solvent selection can prevent certain types of solvent loss. For example, one would avoid a solvent known to react irreversibly with a solute in the extractor feed stream or a solvent known to form an emulsion with water. Other sources of loss are common to all extraction processes, regardless of the solvents and solutes involved. Examples are incomplete phase separation following extraction and incomplete solvent-solute separation in the regeneration step. These problems cannot be circumvented completely, but their effects can usually be minimized by appropriate process-design measures.

Loss of Solvent by Dissolution and Entrainment in Raffinate

Loss of solvent to the extractor raffinate is always an important consideration. Solvent can be lost both in dissolved and in dispersed-droplet form (entrainment). Solubility losses are relatively predictable. The raffinate is typically very diluent (less than 99 mole% H_2O), so that the solvent solubility can usually be taken as its solubility in pure water, although this is often a poor approximation when surface-active agents are present, even if they are quite dilute, due to micelle formation (Adamson, 1967). High solubilities can also result when a solute forms a water-soluble complex with the extractant, e.g., acetic acid/low-molecular-weight amine. Miniplant extractions of wastewater G with DIBK Alamine 336 mixtures gave solubilities for both the amine and the

DIBK that were quite close to those in pure water (Pittman, 1979).

Entrainment, on the other hand, is quite difficult to predict with any certainty. It depends strongly on the properties of the solvent, e.g., the specific gravity, interfacial tension against water, emulsification tendencies, etc., as well as on the type of extractor and the manner in which it is operated. One must also consider the possibility of a process upset or operator error.

For ethyl acetate, solubility alone would result in a loss of 71,000 ppm, or $37.63/m^3 raffinate. Fortunately, ethyl acetate is quite volatile and is easily recovered by a steam-stripping process operated at atmospheric pressure or under vacuum.

The cost of such a solvent-recovery system is only a small fraction of the overall cost of the extraction process. For ethyl acetate (Table 38), raffinate-stripping at atmospheric pressure represents only 1/10 of the DFC and an operating cost of $0.05/m^3 raffinate, including both utilities and amortized capital items.

Since the ethyl acetate is more volatile than water, entrained ethyl acetate droplets could probably be recovered in the stripper along with the dissolved solvent. However, dispersions of the non-volatile TOPO and amine solvents and their typical diluents cannot be recovered by stripping. As explained by Rasquin, et al. (1978), steam-stripping is essentially a liquid-phase-mass-transfer-controlled process, especially in the case of operation under vacuum. Consequently, the primary driving force for stripping of non-volatile, dispersed, extractant droplets is the solubility of the extractant in water. This is usually very low, e.g., 600 ppm for DIBK, and less than 10 ppm for Alamine 336 and TOPO.

In one study, pilot-plant-scale extraction of uranium by amine solvents resulted in at least 0.02 volume % entrainment in the raffinate (Crouse and Brown, 1955). This level of entrainment would require extractant make-up at a cost of $0.20/m^3 raffinate for an amine system and $1.83/m^3 for TOPO, if the extractant were 50 wt. % of the solvent phase in each case. Entrainment levels reported in Section 6 are even higher.

Control of Entrainment Losses

There are many possible ways to control the cost of entrainment, including the following: (1) avoid the use

of very expensive extractants such as TOPO, or use them in dilute solution in an inexpensive diluent. The latter would reduce K_D, of course. (2) Run the extractor in a manner that produces large, easily-settled droplets. This reduces the mass-transfer efficiency of the extractor, and it is difficult to produce a uniform dispersion. However, drop-size optimization can be beneficial. (3) Use an extractor that limits entrainment by the nature of its operation. The Merichem extractor (anon., 1974), for example, contains tightly-packed fibers that are wet preferentially by one of the phases. This phase adheres to the fibers and can be made to flow countercurrently to the other phase with very little droplet formation. Columns containing "static mixers" operate in a similar manner (Rosenzweig, 1977). Other possibilities (Hanson, 1968) include the Podbielniak extractor, which increases settling rates by the use of centrifugal force. The Podbielniak is, however, relatively expensive for a large-scale application. (4) Use some type of secondary-recovery device. Treybal (1963) describes many alternatives, including centrifuging, special separating membranes, electrostatic coalescers, etc. (5) Utilize a dual-extraction process, as suggested by Earhart, et al. (1977); this possibility is evaluated by Ricker (1978). (6) Use a flotation-skimming process--not studied in this work.

A secondary-recovery device is certainly a reasonable possibility. For example, Earhart (1978) reports that a Mapco #1500 coalescer (Mapco, Inc.), a series of fibrous, fixed-bed separators similar to cartridge filters, can virtually eliminate entrainment of a variety of organic chemicals from wastewater. Effluent levels of 10-15 ppm are reported, which is the basis of the 20 ppm used in the cost estimates (Tables 38 through 41). Installed cost is estimated to be \$20,000 for a 22.7 m^3/hr capacity (Gale, 1978). This means an operating cost of about \$0.02/m^3 raffinate. The device is simple and requires minimal maintenance.

The Use of Alternative Extractor Designs

Serious consideration should also be given to the type of extraction device to be used for the primary extractor. Unfortunately, in this work, the only experimental extractor available was an RDC. Many experimental runs were made with the DIBK-amine extractant in the RDC and a wide range of raffinate entrainment was observed, depending primarily on the agitator speed and the size of the discs and stators used. The RDC seemed to produce a large variation in drop size rather than a narrow range, and the smaller droplets were easily entrained.

This is probably typical of other extractors with similar agitation systems.

Treybal (1963) and Hanson (1968) discuss alternative designs, some of which have already been mentioned. One must keep in mind that entrainment problems may be reduced in an alternate extractor, but possibly at the expense of increased complexity, lower mass-transfer efficiency, and/or higher overall cost. The state-of-the-art is such that these factors cannot be optimized a priori; each alternative must be tested with the wastewater and solvent under consideration, and at nearly full-scale, before a quantitative comparison can be made. Obviously, the engineer will usually rely on his judgement or on the experience of a contractor, rather than resort to such expensive tests.

In this work, it seemed reasonable and sufficiently conservative to assume that significant entrainment from the primary extraction step would be inevitable, and to allow for the cost of a recovery device, as well as significant (20 ppm) residual entrainment. Still, entrainment is an important uncertainty in the process design and in the cost analysis, especially for the amine and TOPO extractants; experimental resolution is necessary before these extractants can be widely used.

Loss Due to Solvent Degradation

The other source of solvent loss common for most extraction processes is the regeneration step. The discussion here is limited to regeneration by distillation, since this is the most common method.

Other than irreversible solute-solvent reactions, discussed previously, there are three main possibilities for loss in the regeneration step. The first is incomplete solvent-solute separation, i.e., solvent lost to the acetic-acid product. This can be easily avoided by proper column design. The second is thermal degradation, including oxidation with traces of dissolved air and cracking reactions.

Surprisingly, there are some quantitative data available on the thermal degradation of Alamine 336 (Hardwick and Wace, 1965), indicating that heat stability should not be a problem at the conditions contemplated for the reboiler in the regeneration system, as long as residence times in the hot sections of the process, especially the reboilers for the dehydrator and the regenerator, are on the order of 5-10 minutes or less.

Tri-octyl phosphine oxide is reported to be stable (Helsel, 1977); no stability tests were performed on TOPO extractants in the present work.

SOLVENT PURIFICATION--REMOVAL OF NON-VOLATILE SOLUTES

The third and potentially most serious source of solvent loss is that due to the possible build-up of non-volatile solutes in the higher-boiling solvents. The obvious way to prevent the accumulation of non-volatiles would be to take a purge stream from the regenerated solvent. The purge stream rate would depend on the rate of build-up and on the maximum allowable concentration of non-volatiles in the solvent. If, for example, the wastewater feed rate were 22,700 kg/h, the solvent circulation rate 10,000 kg/h, the build-up rate 1 kg/h, and the maximum allowable concentration 5.0 wt.%, the required purge rate would be 20.0 kg/h. For a 50 wt. % Alamine 336 in DIBK solvent, this purge would cost $1.36/m^3 wastewater ($9.96/m^3 for 50% TOPO), or more than the total of all other costs in Tables 40 and 41. The build-up rate may be higher than 1/10,000, and 5 wt. % non-volatiles may be too high; costs would be even higher in such cases.

Obviously, if the required purge rate is on the order of 1 kg/h or more, the extractant must be recovered from the non-volatile solutes. One approach would be to evaporate the extractant, leaving a non-volatile residue for disposal. However, evaporation is probably not practical for TOPO, due to its very high boiling point.

An alternative for TOPO might be to evaporate most of the diluent, and then partially crystallize the TOPO from the residue. The non-volatiles might solidify simultaneously, however. Another alternative would be to wash the purge with a liquid that would dissolve either the non-volatile solutes or the TOPO preferentially. Both of these alternatives are likely to result in large losses of TOPO, due to poor separation factors in the crystallization and wash steps. Neither method was tested experimentally in this work; recovery of TOPO from a solvent purge stream remains an open question. The estimated cost of the purification system given in Table 40 is only a very rough estimate.

For the amine extractant, it might be possible to evaporate the diluent and part of the amine at atmospheric pressure, then cool the residue and separate out the non-volatiles as a second liquid phase or in solid form. This would avoid the cost of a vacuum system and reduce

the energy consumption for the purification process. However, the concentration/cooling process is rather speculative, and only simple evaporation was considered for the cost estimates.

Table 42 gives estimated costs for a batch still to be used in conjunction with an extraction process with a capacity of 22.7 m^3/h wastewater. The following assumptions were used in the cost estimate: (1) A 20.0 kg/h purge rate; (2) storage capacity for a 2-week accumulation of purge; (3) size of still such that a 2-week accumulation could be evaporated in one day (24 hours); (4) loss of 5% of the amine to the residue; and (5) use of high-pressure steam at \$3.17/GJ (\$3.33/10^6 BTU).

The major cost item, by far, is the loss of amine to the residue. The assumption of a 5% loss is rather arbitrary, as is the 20 kg/h purge rate. It was not possible to determine these figures more accurately in this work. To do so would require operation of an extraction pilot-plant for a long-enough period of time to measure the build-up rate of non-volatiles and to accumulate enough non-volatiles for a batch distillation experiment. No build-up of non-volatiles was observed in miniplant extraction experiments, even when the solvent was regenerated and recycled several times. This suggests that the acetic-acid-manufacturing wastewaters contain little, if any, extractable non-volatiles.

SUMMARY OF THE RECOMMENDED EXTRACTION PROCESS FOR RECOVERY OF ACETIC ACID

The complete flowsheet of the recommended extraction process is given in Figure 15. The discussion to follow assumes the use of 30-50 volume % Alamine 336, or a comparable tertiary alkyl amine, dissolved in DIBK. However, DIBK is not an ideal diluent, and the development of a better diluent could reduce the cost of the process by 30% or more. Alamine 336 should not be used with wastewaters containing chlorinated acetaldehydes.

The first step in the process is the extraction of acetic acid by the amine/DIBK solvent. The recovery of acetic acid to be achieved in the extractor is a key design specification. For a 5 wt. % wastewater feed, a 97% recovery requires 10 equilibrium stages and an F_s/F_w of 1.10, which is about the maximum that can be justified economically. As demonstrated experimentally by Ricker, et al (1979b), a 93+% recovery can be achieved in six mixer-settler stages with an extractant containing 50% Alamine 336 and an F_s/F_w of 0.81.

TABLE 42. COST ESTIMATE FOR DIBK/ALAMINE 336 PURIFICATION--BATCH SYSTEM

Direct fixed capital	M$	% of DFC
still	12.0	60.0
heat exchanger	2.0	10.0
vacuum system	1.0	5.0
pumps, drums, etc.	1.0	5.0
contractor's fee, contingency, etc.	4.0	20.0
	20.0	

Operating cost	$/yr	$/m^3 wastewater	%
steam and cooling water	200	0.001	0.8
loss of amine	19,400	0.11	82.3
depreciation, etc.	3,600	0.02	16.9
	23,200	0.13	

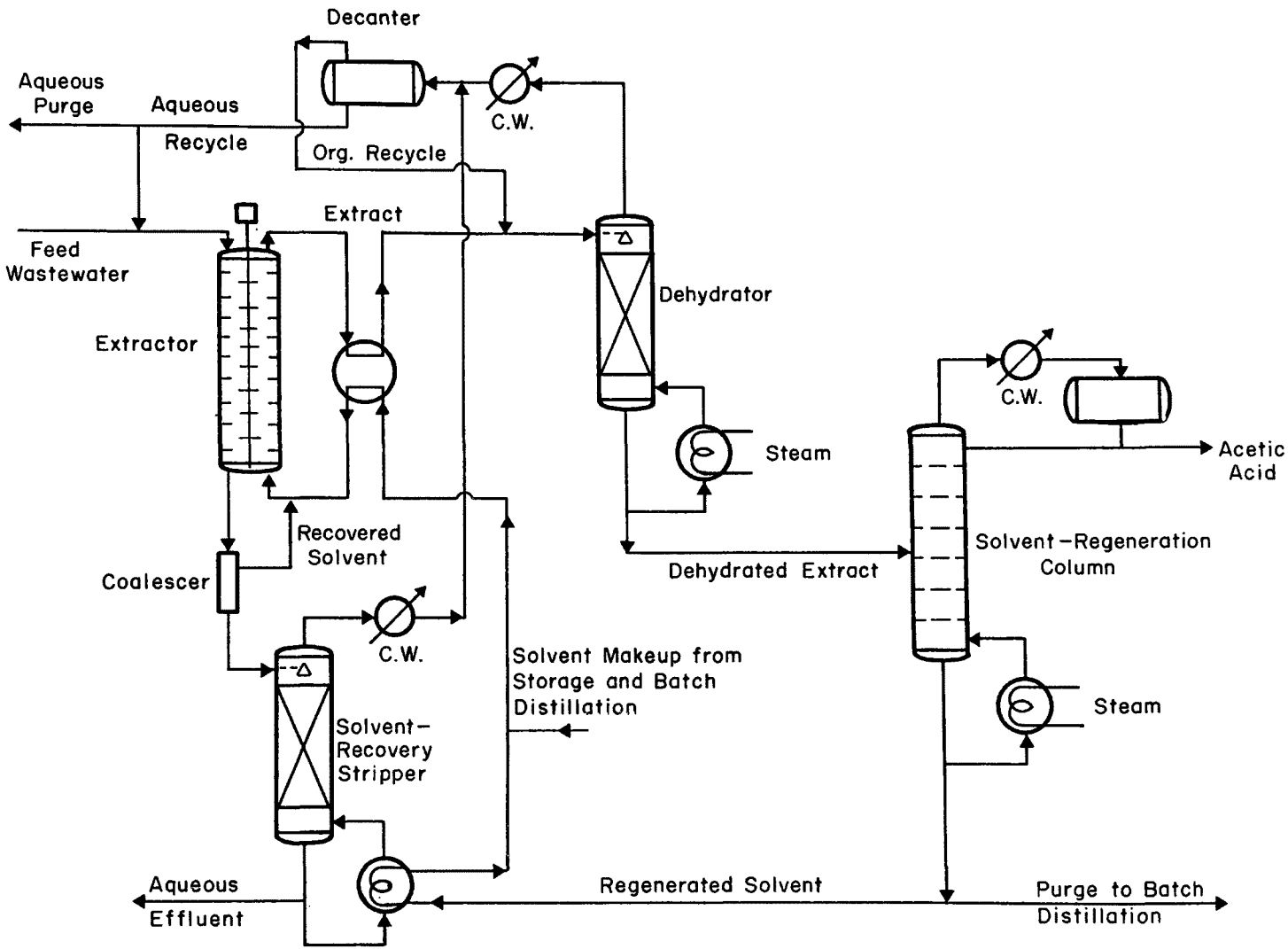

Figure 15. Flowsheet of recommended acetic-acid recovery process.

Operation at low acid concentrations is relatively expensive, because the Alamine 336/DIBK equilibrium curve is non-linear; K_D values are less than 1.0 below approximately 0.5 wt.% aqueous acid. Consequently, in the treatment of a 1 wt. % wastewater feed, the maximum practical acid recovery is about 86%.

Since the extraction requires the equivalent of a large number of equilibrium stages, a non-agitated column is probably a poor choice for the extraction device. A mixer-settler cascade or an agitated column, such as an RDC, are more likely candidates. Solvent-entrainment problems may influence extractor selection, although the Alamine 336/DIBK system appears to have good phase-separation characteristics.

The aqueous raffinate passes through a coalescer to remove dispersed solvent droplets. It then enters a vacuum steam-stripper, operating at 7320 Pa (55 mm Hg), where approximately 92% of the dissolved DIBK is recovered (the vacuum system is not shown in Figure 15). The final aqueous effluent contains 1500 ppm acetic acid, assuming a 97% recovery from a 5% wastewater feed, 50 ppm dissolved DIBK, and an average of 20 ppm entrained DIBK-amine mixture.

The effluent will also contain other solutes, depending on the nature of the feed wastewater. Solutes in the feed that are more volatile than acetic acid will leave the process in the aqueous effluent, for the most part. Solutes that have roughly the same or a somewhat higher volatility than acetic acid, and are extracted at least as easily as acetic acid, will appear in the acetic acid product.

The COD removal from wastewaters containing acetic acid as the primary solute will be on the order of 80% or more. Subsequent treatment by biological oxidation would result in a more complete COD reduction. The loading on such a biological-treatment facility will be much less than if extraction were not used as a pre-treatment.

The extract phase from the extraction step contains about 1 wt.% water and 5 wt.% acetic acid, depending on the feed concentration, and small amounts of other solutes extracted from the wastewater. Water has a high activity coefficient in the extract phase and is easily separated from acetic acid and solvent in a reboiled stripping column. The water/acetic-acid relative volatility is estimated to be 15.0 for operation at atmospheric pressure.

The overhead from this column is at about 90°C. Since the formation of the amine-acetic acid complex is exothermic (Kohler, et al., 1972), the complex is more stable at lower temperatures. At 40°C, the water/acetic acid relative volatility is estimated to be 31.0, based on liquid-liquid equilibria, and in this respect, there is some advantage to vacuum operation for the dehydration column. However, cost estimates indicate that the energy savings resulting from vacuum operation would be offset by increased capital costs for a vacuum system and for a larger distillation column.

The condensed vapor from the dehydrator is two-phase, since a small amount of DIBK is taken overhead. The decanted organic phase recycles to the dehydrator, and the aqueous phase, which contains acetic acid and volatile pollutants, recycles to the extractor inlet. A small aqueous purge can be used to rid the system of volatile solutes, if desired. The same decanter is used for the separation of the two-phase overhead from the solvent-recovery stripper. The combination of solvent-recovery and solvent-dehydration columns is similar, in principle, to the well-known system for the azeotropic separation of water and 1-butanol (Kirk and Othmer, 1963).

Finally, the acetic acid and the Alamine 336/DIBK extractant are separated in a plate-type distillation column operating at atmospheric pressure. The stripping section of this column separates acetic acid from DIBK and amine. The rectifying section separates DIBK and acetic acid. A total condenser returns some of the overhead acid for reflux, and the rest is product. The reflux ratio (external reflux to distillate product) is about 1.2. The overhead product is estimated to be less than 95 wt.% acetic acid, the impurities being residual water and wastewater solutes not removed in the dehydrator. Higher purities could be achieved, if necessary, by an increase in the dehydrator size and stripping-vapor rate.

The hot solvent bottoms product, at about 175°C, provides reboiler energy for the solvent-recovery stripper and pre-heats the dehydrator feed. A small purge stream, perhaps 10-20 kg/h for a solvent-circulation rate of approximately 25,000 kg/h, removes non-volatile solutes from the solvent. The solvent portion is recovered by batch distillation, as discussed previously.

SECTION 8

TREATMENT OF WACKER-PROCESS WASTEWATERS

The presence of chlorinated acetaldehydes makes the wastewaters from the ethylene-oxidation process (Wacker process) difficult to treat by extraction. This Section summarizes the experimental problems encountered in extractions of the Wacker wastewaters and discusses process design considerations for a treatment system based on extraction.

REACTIVITY OF CHLORINATED ACETALDEHYDES

The chlorinated acetaldehydes are very reactive chemicals; MCA is especially reactive, behaving as both a carbonyl compound and a chlorinated hydrocarbon (Miller, 1969a). In an extraction process, the reactivity of these compounds can cause problems during the extraction step and in regeneration of the solvent by distillation.

Michaels (1977) found that the chlorinated acetaldehydes react irreversibly with amine extractants during extraction. He also found experimental indications of a reaction with TOPO--a consistent disappearance of MCA in TOPO extractions, whereas mass-balance closures in extractions with other solvents, such as 2-ethyl-1-hexanol, were within experimental error. However, he was not able to show conclusively that the disappearance of MCA was due to a reaction with TOPO.

In the present work, an additional experiment was performed to check for MCA-TOPO reactivity. An amount of 0.210 milliliters (ml) of a solution of 30 wt.% TOPO in Chevron Solvent 25 was placed in a 500-ml flask, maintained at 96°C by a temperature controller and equipped with a reflux condenser. Thirty wt.% aqueous MCA was added, and samples were withdrawn at intervals. The TOPO content of each sample was measured by GC. The GC column was 0.5 m of stainless steel tubing packed with 5% OV-17 (supplied by Varian, Inc.) on 80-100 mesh, acid-washed Chromosorb W. The column was maintained at 275°C and the injector at 350°C.

The unknown TOPO peak response (TC detector) was

compared to that of a standard solution of TOPO. No decrease in the TOPO peak was measured in six samples taken over a period of 24 hours; the standard deviation of the data was 3.7%. Approximately 0.030 kg more MCA solution was added to the contents of the flask, and the experiment was continued for another 24 hours. Again, there was no apparent decrease in the TOPO concentration.

This experiment suggests that MCA and TOPO do not react, in contrast with the conclusions of Michaels. The disappearance of MCA observed in his experiments may have been due to other factors, such as a reaction with an impurity in the TOPO extractant.

Another pertinent reaction of the chlorinated acetaldehydes is the addition of alcohol molecules to form hemiacetals and acetals (Morrison and Boyd, 1966a; Miller, 1969a). Hemiacetal formation is easily reversible and is actually beneficial in that it results in large distribution coefficients during extraction with alcohol solvents. However, acetal formation, which is encouraged by conditions in a regeneration by distillation, is much less readily reversible. The problem is similar to that posed by esterification.

Still another consequence of the reactivity of chlorinated acetaldehydes is corrosiveness. An industrial source has reported serious corrosion problems in distillation equipment in which chlorinated acetaldehydes were present. The use of special resistant metal alloys in such equipment did not prevent corrosion. The chlorinated acetaldehydes seemed to cause deposits of polymeric materials on metal surfaces, possibly with the release of hydrochloric acid (HCl) by hydrolysis. These deposits appeared to be corrosion sites.

PROCESS-DESIGN CONSIDERATIONS FOR WACKER WASTEWATERS

Many of the design requirements for an extraction process for the Wacker wastewaters are the same as for the basic acetic-acid-recovery processes. However, the reactivity of the chlorinated acetaldehydes results in some additional constraints. First, the acetic acid cannot be recovered from a Wacker wastewater by extraction with an amine extractant unless the chlorinated acetaldehydes are first removed in a pre-treatment step. Virtually complete removal would be required; stoichiometrically, 1 part by weight MCA reacts with 6.7 parts Alamine 336, so that a residual concentration of only 10 ppm MCA could result in a cost of as much as $\$0.16/m^3$ wastewater for amine make-up. Moreover, the resulting quaternary-ammonium compound is likely to be surface active and might thus promote

emulsion formation, as experienced by Sanchez (1977) in miniplant RDC extractions of sample F with amine extractants.

Second, the primary alcohols, which are the best known extractants for chlorinated acetaldehydes cannot be regenerated by distillation because of esterification and acetal formation. Secondary and tertiary alcohols are probably much more resistant to esterification (Morrison and Boyd, 1966d) and may be less prone to acetal formation due to steric hindrance. However, those alcohols are also significantly less effective than primary alcohols as extractants for chlorinated acetaldehydes.

Other extractants give relatively poor distribution coefficients, on the order of 1.0 and less (Michaels, 1977), and would be expensive to use for the removal of chlorinated acetaldehydes by extraction.

Third, corrosion problems would tend to discourage distillation of any solvent containing chlorinated acetaldehydes.

PRE-TREATMENT TO REMOVE CHLORINATED ACETALDEHYDES

A number of alternative methods of pre-treatment for removal of chlorinated acetaldehydes were considered in the present work. The conclusions as to their potential utility are as follows:

(1) The hydrated form of MCA is less volatile than water; steam stripping is thus prohibitively expensive.
(2) In an activated-carbon-adsorption process, the polarity of MCA and its low molecular weight would probably result in low equilibrium carbon loadings (Nathan, 1978). This, combined with the relatively high MCA concentration, would require large bed volumes and rapid carbon turn-over, i.e., the process would be expensive.
(3) The chlorinated acetaldehydes might be converted chemically to a less troublesome form. For example, the acetaldehydes might be chemically oxidized or converted to insoluble products that could be removed by filtration. As noted by Fox (1973), the cost of the chemical agent is often prohibitive, especially when the solute is concentrated.
(4) Wet air-oxidation is an alternative to chemical conversion (Pradt, 1972; Hirai, 1975). For example, the chlorinated acetaldehyde might be oxidized to chloro-acetic acids; these strong acids could then be recovered from the aqueous phase by an amine extractant

or by other means. Acetic acid is resistant to oxidation under fairly extreme wet air-oxidation conditions (Day, et al., 1973; Williams, et al., 1975) and could probably be co-extracted from the oxidation-reactor effluent with the chloro-acetic acids. Acetaldehyde and other wastewater solutes would probably be oxidized to form additional acetic acid. A key question would be the compatibility of amine extractants with and the corrosiveness of the chloro-acetic acids, i.e., are they more desirable than chlorinated acetaldehydes? Air-oxidation pre-treatment appears to be an interesting alternative, but it was not investigated experimentally in the present work.

(5) One could consider a dual-solvent process with a preliminary selective extraction step to remove the chlorinated acetaldehydes, e.g., with 2-ethyl-1-hexanol as the extractant. As mentioned previously, the 2-ethyl-1-hexanol would have to be regenerated by some means other than distillation.

DUAL-SOLVENT EXTRACTION

The conceptual design of a dual-solvent process is shown in Figure 16. Solvent A is for pre-treatment and solvent B is for acetic-acid recovery; the solvent B loop is conceptually the same as in the processes discussed earlier.

A detailed cost analysis of the dual-solvent process was not performed because of the uncertainty of the regeneration step. However, an order-of-magnitude estimate can be derived from the costs of the processes in Section 7. (1) Since the solvent cycles are independent and the pre-extraction is nearly as difficult as the acetic-acid extraction, the capital cost is assumed to be about twice that of the DIBK-Alamine 336 process (Table 41), or $2 million. (2) Since the major operating-cost items are equipment related plus solvent make-up, the operating cost is also assumed to double. (3) The assumed recovery value of the acetic acid in sample F is $882,000/yr, for a 22.7 m^3/h (100 GPM) wastewater. Given these assumptions, the ROIBT for recovery of acetic acid from sample F is only 19%, i.e., too low to be justified economically, especially considering the risk and the complexity of the process.

A detailed study is likely to be even less promising. For example, one possible regeneration method for the chlorinated-acetaldehyde extractant is a back-wash with sodium bisulfite (Morrison and Boyd, 1966c):

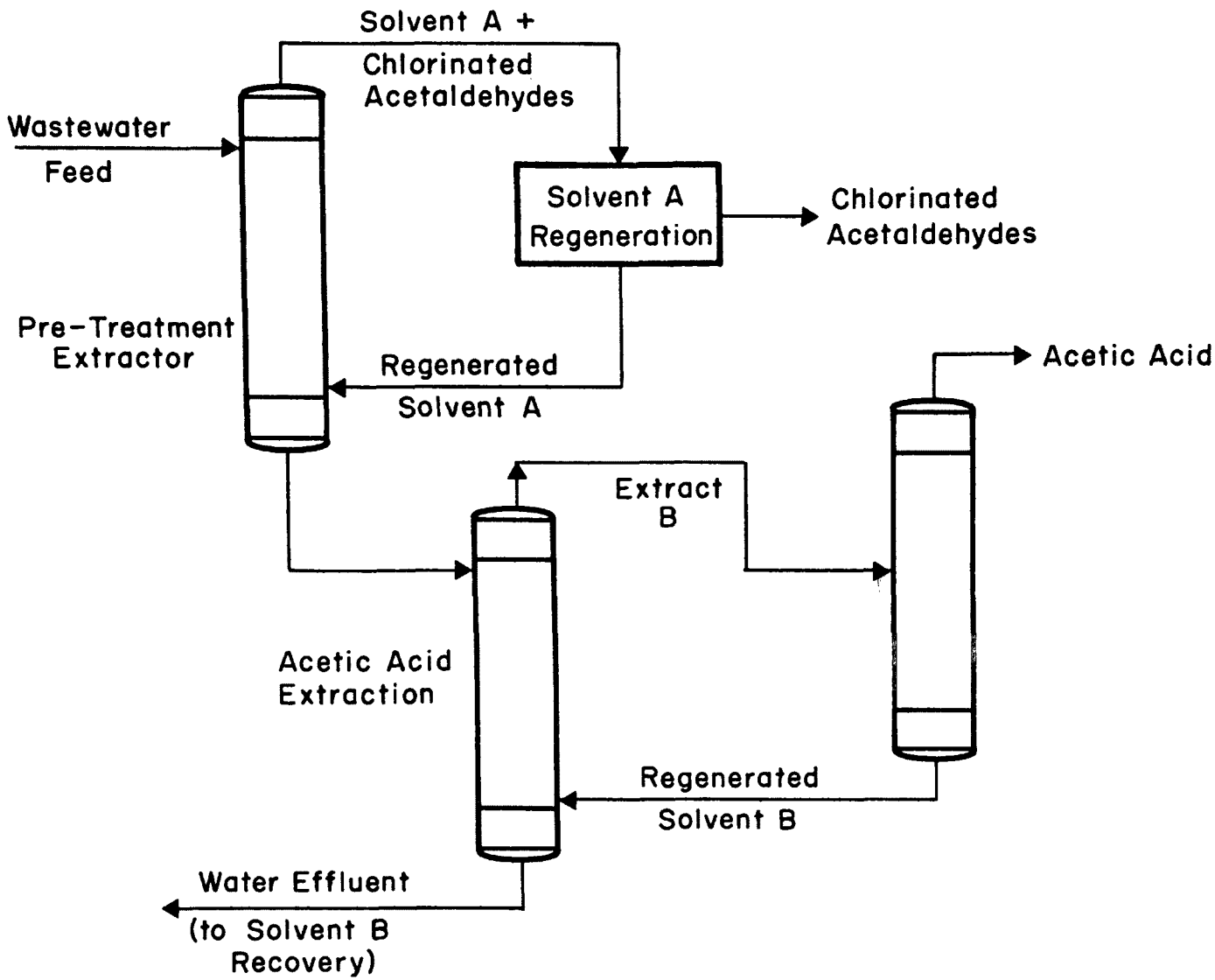

Figure 16. Conceptual design of dual-solvent extraction process for wacker-process wastewaters.

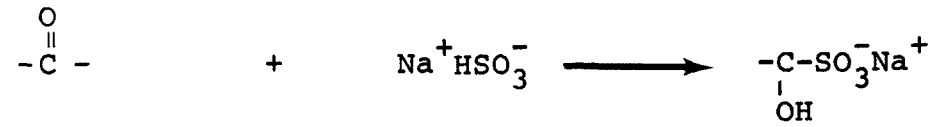

(aldehyde or ketone) (sodium bisulfite) (addition product)

Under certain conditions, the addition product is an insoluble crystalline compound that could conceivably be removed by filtration.

The method was tested experimentally in the present work the presence of co-extracted acetic acid and other solutes in the solvent A extract (Figure 16) resulted in a prohibitively large bisulfite ion consumption. Moreover, the addition product was completely soluble at the concentration tested; thus an aqueous waste stream would be produced.

Other potential drawbacks of a dual-extraction process include the following: (1) If an amine were used as the acetic-acid extractant, a process upset in the solvent-A loop might result in the release of chlorinated acetaldehydes to the solvent-B loop, which would then attack the amine. (2) Sufficiently complete removal of chlorinated acetaldehydes would be difficult. For sample F, reduction of the MCA content to 10 ppm would require a 99.8% removal, a very stringent separation specification. (3) Any solvent A entrained into the solvent B loop would not be recoverable without an extra separation step. If solvent A were an alcohol, it would probably esterify to a large extent before it could be recovered. (4) If the solvent A loop cannot be regenerated by distillation, the disposition of the extracted chlorinated acetaldehydes might be more of a problem than would have been the case with the original wastewater.

RECOMMENDATIONS FOR TREATMENT OF WACKER-PROCESS WASTEWATERS

Extraction is much less attractive for treatment of the Wacker-process wastewaters than for the butane-oxidation wastewaters. A better approach would seem to be a process modification to eliminate the chlorinated acetladehydes from the wastewater.

If this is not feasible, some form of destructive terminal treatment, such as chemical or biological oxidation, would probably be more appropriate than extraction. For example, Hirai (1975) reports a wet air-oxidation process to treat wastewaters containing chlorinated acetaldehydes; the process is non-catalytic and operates at 100°-200° and moderate pressures.

However, such terminal treatment methods were not investigated in the present work.

Another treatment alternative is deep-well disposal, which is the current disposal technique for similar wastewaters in areas of the country in which there are suitable underground geological formations. However, while this practice may be permitted at present, it is certain to come under increasing scrutiny and may be outlawed in the future due to the danger of an unexpected release of toxic chemicals.

SECTION 9

SUMMARY OF FINDINGS

The results of the present work suggest that there should be a strong economic incentive to recover acetic acid from large-volume (e.g., 100 GPM) wastewaters containing on the order of 1.3 wt. % or more acetic acid. An exception would be a wastewater containing other solutes that complicate recovery and purification of the acetic acid, as in the case of the two wastewater samples studied in this work which contained chlorinated acetaldehydes.

Solvent extraction is probably the least expensive recovery process for dilute wastewaters, i.e., those containing less than 10 wt. % acetic acid. Of the extractants considered, an amine, such as Alamine 336 (tri C_8-C_{10} amine), dissolved in an appropriate organic diluent, such as a C_9 ketone, seems to be the most promising for acetic-acid recovery. Such amines are powerful extractants for acetic acid and are commercially available at reasonable cost (approximately $2.40/kg).

A design study was done to determine the best process configuration for acetic-acid recovery with an amine extractant. The most economical configuration appeared to be extraction in an agitated, differential-type contactor, followed by a two-step distillation to regenerate the extractant. The first regeneration step would remove water from the extracted acetic acid, and the second step would recover acetic acid from the extractant. The acetic-acid product was designed to be more than 95% pure, with water as the main contaminant. Glacial acetic acid could be produced at additional cost. Steam-stripping seemed to be the best way to recover dissolved amine diluent from the aqueous extractor raffinate.

The proportion of amine to diluent in the extractant phase was found to be an important process variable. Studies of extraction equilibria showed that there was a maximum in the function of K_D versus wt. % amine in the extractant. The position of the maximum varied with the amount of acetic acid in the aqueous feed and with the type of diluent. The more polar diluents gave the higher K_D values. For a 5 wt. %

acetic acid feed, and with DIBK (di-isobutyl ketone) as the diluent, the maximum K_D value appeared to be at more than 75 wt. % amine in the extractant.

However, other factors influence diluent selection and the optimum extractant concentration. The diluent has a large effect on the co-extraction of water by the extractant, i.e., its selectivity for acetic acid, and on regeneration by distillation. The diluent must have a high boiling point, because the presence of the amine depresses the volatility of acetic acid. The diluent must also be inexpensive and resistant to degradation by oxidation and other chemical reactions. The use of DIBK appeared to be a good compromise between high K_D values and these competing factors.

The optimum amine concentration in the diluent is somewhat lower than that at the maximum K_D value, in general. The higher amine concentrations result in an increase in viscosity, which lowers extraction rates, hinders phase-separation, and can lead to emulsification in some cases. Also, the extractant becomes more difficult to regenerate as K_D increases, i.e., the volatility of acetic acid decreases, as mentioned previously. Finally, the amine is 3-4 times more expensive than common diluents, such as DIBK, so that higher amine concentrations require a greater investment for solvent inventory, and solvent losses, e.g., by entrainment, are more costly.

Quantitative process-optimization was not performed in the present work; more extensive data, including data from continuous, pilot-plant studies, would be required. However, based on the information available, preliminary cost analyses indicated that the optimum extractant concentration for a wastewater feed containing 5 wt. % acetic acid should be about 30-50 wt. % amine, and that the optimum design recovery of acid would be about 95-97% for a 22.8 m^3/h (100 GPM) wastewater. For these conditions, the capital investment was estimated to be $1,030,000, with an operating cost, including utilities, solvent make-up, depreciation, etc., of $253,000/yr ($5.90/1000 gal wastewater). Recovered acetic acid is valued at $2,700,000/yr, for a ROIBT of 244%.

Two of the eight wastewater samples received from acetic acid manufacturers contained on the order of 5% acetic acid and were thus attractive candidates for an acetic-acid extraction process. Two other samples contained about 1 wt. % acetic acid but also contained chlorinated acetaldehydes. These were found to attack amine solvents; for this and other reasons, these samples were termed poor candidates for acetic-acid recovery. Three of the remaining

samples were too dilute for economical acid recovery, and the final sample was found to have been collected incorrectly by the manufacturer and was not considered further.

The acetic-acid-recovery process was tested experimentally on a miniplant scale with the two more attractive wastewaters (Section 6). The extractor was a 1.22 m x 7.65 cm rotating disc contactor (RDC). Typical acetic-acid removals were 70-80%; the performance of the extractor seemed to be dominated by back-mixing in the continuous (aqueous) phase, and higher removals could not be obtained at realistic values of F_s/F_w. However, a 93% removal was achieved for a 6-stage mixer-settler cascade at an F_s/F_w of 0.808 with 50% Alamine 336 in DIBK, and a 99.8% recovery was obtained in a similar experiment with 2-ethyl-1-hexanol diluent at $F_s/F_w = 0.4$.

The only notable problem encountered in the miniplant RDC extractions was the formation of a dispersion of very small droplets in the aqueous phase. These droplets were entrained into the aqueous effluent. Since the extractant is valuable, a large amount of entrainment would be a serious problem unless it were recovered by some means. Gravity-settling is not likely to be effective; samples of the aqueous effluent from the RDC often required several days of standing before the effluent becomes clear.

In some cases, it was possible to run the extractor at low agitator speeds so as to reduce entrainment, and still obtain acceptable acetic-acid removals. Entrainment in such runs was less than 150 ppm amine, equivalent to a cost of $\$0.36/m^3$ of wastewater. Other process costs, excluding solvent make-up, are typically about $\$1.50/m^3$.

It is difficult to predict the level of entrainment that would occur in a large-scale extraction process. It might be necessary to use a type of extractor less prone to small-droplet formation. Special entrainment-removal devices, such as the Mapco coalescer described in Section 7, should also be investigated.

Another important uncertainty in the process design concerns the possible accumulation of non-volatile solutes in the solvent phase. Such solutes might be extracted from the wastewater or might be the result of a solvent-degradation reaction and would have to be purged from the system by some means. This would result in a net loss of solvent and could be a serious problem if the rate of accumulation were large. No such accumulation was noted in this work; however, the solvent phase was not recycled enough times to provide a definitive measurement of the rate of accumulation. A meaningful test

would require a long-term pilot-plant run with continuous recycling of the solvent and with the actual wastewater to be processed in a full-scale plant. Such a study should also determine fouling rates in heat exchange equipment, possible corrosion problems, and other factors that are often a problem in wastewater treatment processes (Lang, et al., 1975) but could not be studied in this work.

It would also probably be necessary to obtain additional fundamental data, e.g., extraction and vapor-liquid equilibria. The data obtained in this work seemed to be adequate for a preliminary cost estimate and feasibility study, but are probably not adequate for a detailed design. Moreover, the chemical systems involved are too highly non-ideal to allow the necessary data to be predicted by common correlations. A thermodynamic model would reduce the amount of experimental data required in that it would allow accurate interpolation of limited data. One possible framework for such a model was discussed.

Extraction was also considered as a treatment method to reduce the COD in the eight wastewater samples, without regard to chemical recovery, i.e., as a potential pre-treatment for biological oxidation or some other terminal treatment method. However, it was concluded that due to the presence of significant amounts of low-molecular-weight, highly-polar organic chemicals, which are difficult to extract as a rule, extraction would be a very costly pre-treatment. The removal of possibly toxic or refractory chemicals, such as the chlorinated acetaldehydes, was considered another possible application for extraction, but did not appear to be practical for the wastewaters studied in this work.

REFERENCES

Abrams, D.S., and J.M. Prausnitz, AIChE J., 21(1), 116 (1975).

Adamson, A.W., Physical Chemistry of Surfaces, 2nd ed., Interscience Publishers, New York, 492 (1967).

Anonymous, Hydro. Proc., 52(11), 93 (1973).

_____, Chem. Eng., 81, Sept. 30, 54 (1974).

_____, Chem. Eng. News, 31 July, 20 (1978).

_____, Chem. Eng., 85(21), 71 (1978a).

Ashland Chemical Company, Bulletin #1181-6.

Barrow, G.M., and E. A. Yerger, J. American Chem. Soc., 76, 5211 (1954); 77, 4474 (1955).

Biribauer, F.A., H.T. Oakley, C.E. Porter, J.H. Staib, and J. Stewart, Ind. Eng. Chem., 49(10), 1673 (1957).

Bonnelli, E.J., and H.M. McNair, Basic Gas Chromatography, Consolidated Printers, Berkeley, California (1968).

Brown, W.V., Chem. Eng. Prog., 59(10), 65 (1963).

Chemical Marketing Reporter, 213(21), (1978).

Coleman, C.F., K.B. Brown, J.G. Moore, and D.J. Crouse, Ind. Eng. Chem., 50(12), 1756 (1958).

Cooper, J.C., and D.G. Harper, Chem. Eng. Prog., 62(10), 85 (1966).

Crouse, D.J., and K.B. Brown, AEC Report, ORNL-1959, Sept. 30, (1955).

Danesi, P.R., R. Chiarizia, and M. Muhammed, J. Inorg. Nucl. Chem., submitted for publication (1977).

Daniels, F., and R.A. Alberty, Physical Chemistry, 3rd ed. Wiley, 218 (1966).

Day, D.C., R.R. Hudgins, and P.L. Silveston, Can. J. Chem. Eng., 51, 733 (1973).

Eaglesfield, P., B.K. Kelly, and J.F. Short, Ind. Chem., 29, 147 (1953); 243 (1953).

Earhart, J.P., Ph.D. Thesis, University of California, Berkeley, California (1975).

Earhart, J.P., and C.J. King, J. Food Sci., 41, 1247 (1976).

Earhart, J.P., K.W. Wong, C.J. King, and J.M. Prausnitz, U.S.EPA-600/2-76-220, 1976.

Earhart, J.P., K.W. Won, H.Y. Wong, J.M. Prausnitz, and C.J. King, Chem. Eng. Prog., 73(5), 67 (1977).

Earhart, J.P., Stauffer Chem. Co., Personal Communication, July 1978.

EPA, U.S., "Methods for Chemical Analysis of Water and Wastes, 1971," Storet No. 00340, 17 (1971)

Fox, R.D., Chem. Eng., 80(18), 72 (1973).

Gale, P.C., D.L. Bracken Co., Personal Communication, July 1978.

Garner, F.H., S.R.M. Ellis, and C.J. Pearce, Chem. Eng. Sci., 3, 48 (1954).

General Mills Co., "Product Notes," Alamine 336.

Grinstead, R.R., U.S. Patent #3,816,524, June 11, 1974.

Groggins, P.H., Unit Processes in Organic Synthesis, 5th ed., McGraw-Hill, New York, 697 (1958).

Guthrie, K.M., Chem. Eng., 76(6), 114 (1969).

Hanson, C., Chem. Eng., 75(18), 76 (1968).

Happel, J., D.G. Jordan, Chemical Process Economics, 2nd ed., Appendix C, Marcel Decker, Inc., New York (1975).

Hardwick, W.H., and P.F. Wace, Chem. and Proc. Eng., 46(6), 283 (1965).

Harris, H.G., and J.M. Prausnitz, Ind. Eng. Chem. Fund., 8, 180 (1969).

Helsel, R.W., Private Communication to C.J. King, August 17, 1976.

_____, Chem. Eng. Prog., 73(5), 55 (1977).

Hibbert, F., and D.N.P. Satchell, J. Chem. Soc. (B), 5, 573 (1968).

Hirai, T., Japan. Kokai, 75, 13 262 (Cl. 13(7) A11, 16B531, 15B31), Feb. 12, 1975.

Hogfeldt, E., and F. Fredlund, Solvent Extraction Chemistry, J. Rydberg, ed., North Holland Pub. Co., Amsterdam, 383 (1967).

Inoe, K., and Y. Baba, Kagaku Kogaku Ronbunshu, 4(1), 95 (1978).

Kawano, Y., and F. Nakashio, Kagaku Kogaku Ronbunshu, 3(5), 440 (1977).

Kertes, S., J. Inorg. Nucl. Chem., 27, 209 (1965).

King, C.J., Separation Processes, McGraw-Hill, New York 447 (1971).

Kirk, R.E., and D.F. Othmer, Encyclopedia of Chemical Technology, 2nd ed., 2, 839 (1963).

_____, 12, 136 (1967).

Kohler, F., E. Leiebermann, G. Miksch, and C. Kaing, J. Phys. Chem., 76(19), 2764 (1972).

Kohn, P.M., Chem. Engn., 83(6), 58 (1976).

Kunin, R., Angew. Chem., Int. Ed., 1(3), 149 (1962).

Lang, W.C., F.P. Dace, and K.H. Pearson, Proceedings of the 2nd National Conference on Complete Water Re-use, AIChE, New York, 1975.

Lawler, G.M., Chemical Origins and Markets, SRI, Inc., Palo Alto, California (1977)

Lowry, R.P., and A. Aguilo, Hydro. Proc., 53 (11), 103 (1974).

Mattison, P., General Mills, Inc., Private communication to C. J. King Jan. 31, 1977.

Meissner, H.P., and B. Chertow, Ind. Eng. Chem., 38(8), 856 (1946).

Mellan, I., Industrial Solvents Handbook, Noyes Data Corp., New Jersey, 337 (1970).

Meyers, H.S., Ind. Eng. Chem., 50, 1671 (1958).

Michaels, J.N., M.S. Thesis, University of California, Berkeley, California (1977).

Miller, S.A., Ethylene and Its Industrial Derivatives, Ernest Benn Ltd., London, 656 (1969a); 682 (1969b).

Moore, M.L., Organic Reactions, R. Adams, ed., 5, Wiley, New York, 301 (1949).

Morrison, R.T., and R.N. Boyd, Organic Chemistry, Allyn and Bacon, Inc., Boston, 642 (1966a); 718 (1966b); 639 (1966c); 671 (1966d).

Nathan, N.F., Chem. Eng., 85(3), 93 (1978).

Nakashio, F., Kyushu University, Japan, Private Communication (1978).

Othmer, D.F., R.E. White, and E. Trueger, Ind. Eng. Chem., 33 (10), 1240 (1941).

_____, Ind. Eng. Chem., 35(5), 614 (1943).

_____, Anal. Chem., 20(8), 763 (1948).

_____, R. Gilmont, and J.J. Conti, Ind. Eng. Chem., 32, 625 (1960).

Page, J.E., and E.L. Smith, J. Soc. Chem. Ind. (London), 67, 48 (1948).

Perry, R.H., C.H. Chilton, and S.D. Kirkpatrick, Chemical Engineers' Handbook, 4th ed., McGraw-Hill, New York, 1963.

Peters, M.S., and K.D. Timmerhaus, Plant Design and Economics for Chemical Engineers, 2nd ed., McGraw-Hill, New York, 1968.

Petterson, W.C., and T.A. Wells, Chem. Eng., 84(20), 78 (1977).

Pittman, E., M.S. Thesis, University of California, Berkeley, California (1979).

Pollio, F.X., R. Kunin, and A.F. Preuss, Envir. Sci. Technol., 1 (6), 495 (1967).

Pradt, L.A., Chem. Eng. Progr., 68(12), 72 (1972).

Prausnitz, J.M., Molecular Thermodynamics of Fluid-Phase Equilibria, Prentice-Hall, New Jersey, 314 (1969).

Rasquin, E.A., S. Lynn, and D.N. Hanson, Ind. Eng. Chem. Fund., 17(3), 170 (1978).

Ricker, N.L., Ph.D. Dissertation in Chemical Engineering, University of California, Berkeley, 1978.

Ricker, N.L., J.N. Michaels and C.J. King, J. Separ. Process Technol., 1, No. 1, (1979a).

Ricker, N.L., E.F. Pittman and C.J. King, J. Separ. Process Technol., 1, No. 1, (1979b)

Ricker, N.L., F. Nakashio and C.J. King, paper presented at Am. Inst. Chem. Eng. Meeting, Boston, MA, August (1979c).

Rosenzweig, M.D., Chem. Eng., 84(10), 95 (1977).

Sakai, W., F. Nakashio, and K. Inoue, Kagaku Kogaku, 33, 1243 (1969).

Sanchez, G.W., M.S. Thesis, University of California, Berkeley, California (1977).

Scibona, G., F. Orlandini, and P.R. Danesi, J. Inorg. Nucl. Chem., 28, 1701 (1966).

Schmidt, V.S., Amine Extraction, Israel Program for Scientific Translations, Ltd. (1971).

Sittig, M., Pollution Control in the Organic Chemical Industry, Noyes Data Corp., London (1974).

Treybal, R.E., Liquid Extraction, 2nd. ed., Chapters 10 and 11, McGraw-Hill, 1963.

Wardell, J.M., M.S. Thesis, University of California, Berkeley, California (1976).

_____, and C.J. King, J. Chem. Eng. Data, 23(2), 144 (1978).

Weast, R.C., Handbook of Chemistry and Physics, 51st Ed., CRC, Cleveland, Ohio (1970).

Williams, P.E.L., P.L. Silveston, and R.R. Hudgins, Can. J. Chem. Eng., 53, 354 (1975).

Won, K.W., Ph.D. Thesis, University of California, Berkeley, California (1974).

_____, and J. M. Prausnitz, AIChE J., 20(6), 1187 (1974).

Woods, D.R., S.J. Anderson, and S.L. Norman, "Evaluation of Capital Cost Data: Heat Exchangers," Department of Chemical Engineering, McMaster University, Hamilton, Ontario, Canada (1975).

Würm, H.J., Glükauf, 104(12), 517 (1968). Reprints available from American Lurgi Corp., 235 E. 42nd Street., New York, NY 10017.

Yerger, E.A., and G.M. Barrow, J. Amer. Chem. Soc., 77 6206 (1955).

TECHNICAL REPORT DATA
(Please read Instructions on the reverse before completing)

1. REPORT NO. EPA-600/2-80-064	2.	3. RECIPIENT'S ACCESSION NO.
4. TITLE AND SUBTITLE Solvent Extraction of Wastewaters from Acetic-acid Manufacture		5. REPORT DATE April 1980 issuing date 6. PERFORMING ORGANIZATION CODE
7. AUTHOR(S) N. Lawrence Ricker and C. Judson King		8. PERFORMING ORGANIZATION REPORT NO.
9. PERFORMING ORGANIZATION NAME AND ADDRESS Department of Chemical Engineering, University of California, Berkeley, California 94720		10. PROGRAM ELEMENT NO. C33B1B 11. CONTRACT/GRANT NO. Grant No. R803773
12. SPONSORING AGENCY NAME AND ADDRESS Robert S. Kerr Environmental Research Laboratory, Office of Research and Development, U.S. Environmental Protection Agency, Ada, OK 74820		13. TYPE OF REPORT AND PERIOD COVERED Final/ 6-1-75 to 9-30-78 14. SPONSORING AGENCY CODE EPA/600/15
15. SUPPLEMENTARY NOTES		

16. ABSTRACT Solvent extraction was evaluated as a potential treatment method for wastewaters generated during the manufacture of acetic acid. Possible goals for an extraction process were considered. For the wastewater samples studied, extraction appeared to be too expensive to be practical unless recovery of a marketable chemical were possible.

Long-chain, tertiary alkyl amines, dissolved in organic diluents, appeared to be the most promising extractants, except for certain wastewaters containing chlorinated acetaldehydes. Amine extractants were studied extensively in small-scale experiments to determine phase equilibria, extractant regenerability, mass-transfer characteristics, and emulsification tendencies.

A cost estimate was prepared for an extraction process to recover acetic acid from a 22,700-kg/h (100-gpm) wastewater containing 5 wt.% acid. Estimated direct-fixed-capital was $1,030,000, with an annual operating cost of $253,000/year ($5.90/1000 gal), resulting in a return on investment before taxes (ROIBT) of 244% per year. The ROIBT, for a 1 wt.% acetic acid wastewater was only about 30%; however, this might be increased by further optimization of the amine/diluent combination.

17. KEY WORDS AND DOCUMENT ANALYSIS

a. DESCRIPTORS	b. IDENTIFIERS/OPEN ENDED TERMS	c. COSATI Field/Group
Water Pollution Solvent Extraction Industrial Wastewater	Acetic Acid Manufacture Organic Solvents Cost Estimates Wacker-Process	07A

18. DISTRIBUTION STATEMENT Release to Public	19. SECURITY CLASS *(This Report)* Unclassified	21. NO. OF PAGES 168
	20. SECURITY CLASS *(This page)* Unclassified	22. PRICE

EPA Form 2220-1 (9-73)

☆ U.S. GOVERNMENT PRINTING OFFICE: 1980-657-146/5658