EPA-600/3-75-012
November 1975

Ecological Research Series

COMPARATIVE TOXICITY OF SEWAGE-EFFLUENT DISINFECTION TO FRESHWATER AQUATIC LIFE

Environmental Research Laboratory
Office of Research and Development
U.S. Environmental Protection Agency
Duluth, Minnesota 55804

RESEARCH REPORTING SERIES

Research reports of the Office of Research and Development, U.S. Environmental Protection Agency, have been grouped into five series. These five broad categories were established to facilitate further development and application of environmental technology. Elimination of traditional grouping was consciously planned to foster technology transfer and a maximum interface in related fields. The five series are:

1. Environmental Health Effects Research
2. Environmental Protection Technology
3. Ecological Research
4. Environmental Monitoring
5. Socioeconomic Environmental Studies

This report has been assigned to the ECOLOGICAL RESEARCH series. This series describes research on the effects of pollution on humans, plant and animal species, and materials. Problems are assessed for their long- and short-term influences. Investigations include formation, transport, and pathway studies to determine the fate of pollutants and their effects. This work provides the technical basis for setting standards to minimize undesirable changes in living organisms in the aquatic, terrestrial and atmospheric environments.

This document is available to the public through the National Technical Information Service, Springfield, Virginia 22161.

EPA-600/3-75-012
November 1975

COMPARATIVE TOXICITY OF SEWAGE-EFFLUENT DISINFECTION TO FRESHWATER AQUATIC LIFE

by

John W. Arthur
Robert W. Andrew
Vincent R. Mattson
Donald T. Olson
Gary E. Glass
Barbara J. Halligan
Charles T. Walbridge

Environmental Research Laboratory
Duluth, Minnesota 55804

U.S. ENVIRONMENTAL PROTECTION AGENCY
OFFICE OF RESEARCH AND DEVELOPMENT
ENVIRONMENTAL RESEARCH LABORATORY
DULUTH, MINNESOTA 55804

DISCLAIMER

This report has been reviewed by the Environmental Research Laboratory, U.S. Environmental Protection Agency, and approved for publication. Mention of trade names or commercial products does not constitute endorsement or recommendation for use.

ABSTRACT

Flow-through laboratory bioassays were conducted with a domestic secondary sewage effluent that had been disinfected by chlorination, by chlorination followed by dechlorination, and by ozonation. Effluent without disinfection served as a control. Disinfection with chlorine and ozone generally maintained the effluent at total coliform levels of less than 1,000 per 100 ml. Lake Superior water served as the diluent source for the experiments. Short-term (7-day) exposures were conducted with 13 species (seven fish and six invertebrates), and long-term (generation) tests were performed with three species (one fish and two invertebrates). In both series of tests the chlorinated effluent was lethal at appreciably lower concentrations than any of the other three effluent treatments. Fish were more sensitive than the invertebrates to the chlorinated effluent in 7-day tests. The respective 7-day TL50 values of total residual chlorine to fish and invertebrates ranged from 0.08 to 0.26 and 0.21 to >0.81 mg/l. Residual ozone rapidly decreased in the treated effluent and was not measurable in the test tanks. When special short-term test procedures and shorter retention times for the ozonated effluent were used, measured residual ozone was about as lethal to fathead minnows as residual chlorine. The highest mean total residual chlorine concentrations having no long-term adverse effect on fathead minnows, amphipods, and Daphnia were 14, 12, and 2-4 μg/l., respectively. No daphnids survived at approximately 10 μg/l. mean total residual chlorine, a concentration that corresponds to a chlorinated sewage concentration of about 2.5%. Residual sulfite at the concentrations used to neutralize the chlorine residual dissipated readily and had no measurable adverse effect on the species tested.

This report was submitted in fulfillment of Project Numbers 18050 WAP and 16AAE by the Environmental Research Laboratory-Duluth (formerly the National Water Quality Laboratory). Experimental work was completed in November 1972.

CONTENTS

		Page
Abstract		iii
List of Figures		vi
List of Tables		vii
Acknowledgments		ix
Sections		
I	Conclusions	1
II	Recommendations	3
III	Introduction	4
IV	General Bioassay and Analytical Procedures	6
	Disinfection	6
	Analytical Methods	13
	Results	15
V	Acute Tests	22
	Methods	22
	Results	25
VI	Chronic Tests	32
	Methods	32
	Results	35
	Fathead Minnow Chronic Test	36
	Amphipod Chronic Test	39
	Daphnia Chronic Test	40
VII	Discussion	44
VIII	References	49
IX	Appendices	52

FIGURES

No.		Page
1	Sewage Flow from Storage Tanks to Diluter Cells	7
2	Chronic Test Apparatus Used for Volumetrically Dividing, Chlorinating, and Dechlorinating the Sewage Effluent	9
3	Ozone Generator	11
4	Apparatus Used for Volumetrically Dividing and Ozonating the Sewage Effluent in Chronic Tests	12

TABLES

No.		Page
1	Chemical Characteristics of the Sewage Effluent Collected at the Silver Bay, Minnesota, Municipal Treatment Plant	16
2	Chemical Characteristics of the Sewage Effluent in the Laboratory Storage Tanks	17
3	Total Residual Chlorine and Ozone Concentrations Measured from Diluter Toxicant-Bearing Cells and Ozone from Column During the Acute and Chronic Tests	18
4	Concentrations of Total Coliforms in the Storage Tanks and Diluter Cells During the Acute Tests	20
5	Concentrations of Total Coliforms in the Storage Tanks and Diluter Cells During the Chronic Tests	21
6	Sources and Sizes of Animals Used for the Acute Tests	23
7	Mortality of Seven Fish and Six Invertebrate Species in Acute Tests of Various Concentrations of Four Effluent Treatments after 7 Days' Exposure	26

		Page
8	Acute Toxicity of Chlorinated Effluent to Seven Fish and Six Invertebrate Species	28
9	Hatchability of Fathead Minnow Eggs in Dechlorinated and Ozonated Test Waters	31
10	Survival and Reproduction of Fathead Minnows During 43 Weeks' Continuous Exposure to Nondisinfected and Disinfected Effluents	37
11	Survival and Reproduction of Amphipods after 20 Weeks' Continuous Exposure to Nondisinfected and Disinfected Effluents	41
12	Survival and Reproduction of *Daphnia magna* During 2 Weeks' Continuous Exposure to Nondisinfected and Disinfected Effluents	43

ACKNOWLEDGMENTS

We would like to thank the staff of the Silver Bay, Minnesota, Sewage Treatment plant for their generous support in providing equipment and giving time for the effluent collections. Appreciation is expressed to many members of the Environmental Research Laboratory-Duluth (formerly the National Water Quality Laboratory) staff who provided assistance during the course of this project. Mr. F. A. Puglisi devised and constructed the special chemical metering apparatus and determined the dose concentrations. Mr. G. R. Endicott designed and constructed many of the supportive components incorporated into the disinfection and bioassay process. Bacterial analyses were performed by Ms. S. Bagley, Mr. D. Herman, and Mr. R. M. Brosdal; Ms. V. Snarski and Mr. L. F. Mueller performed the routine analyses and contributed bioassay assistance. Mr. A. R. Carlson assisted with the acute tests. The effluent was transported to the laboratory and maintained in the storage tanks by Mr. D. Beedy and Mr. R. E. Lewis. Dr. T. W. Thorslund performed the statistical analyses reported in section VI. In addition, we thank Ms. S. L. Forseth for typing this manuscript.

SECTION I

CONCLUSIONS

1. Chlorinated effluent was lethal to the test animals at appreciably lower concentrations than nondisinfected, dechlorinated, and ozonated effluents in both short- and long-term tests.

2. Both ozone and chlorine generally maintained effluent disinfection levels at <1,000 total coliforms per 100 ml.

3. Residual ozone rapidly disappeared from the effluent and was not measurable in the test-tank waters.

4. During the short-term tests fish mortality was more rapid than invertebrate mortality in the chlorinated effluent.

5. The highest mean total residual chlorine concentrations having no long-term adverse effect on fathead minnows, amphipods, and Daphnia were 14, 12, and 2-4 μg/l., respectively. This corresponds to a concentration of 1.2 to 2.5% chlorinated effluent.

6. The lowest mean total residual chlorine concentrations having a measurable long-term effect were 42 μg/l. for fathead minnows (survival of initial animals), 19 μg/l. for amphipods (reproduction), and approximately 10 μg/l. for Daphnia (survival of initial animals).

7. Residual sulfite at the concentrations used to neutralize the residual chlorine dissipated readily and had no adverse effect on the species tested.

8. When special test procedures and shorter retention times for the ozonated effluent were used, measured residual ozone was about as lethal as residual chlorine to fathead minnows.

9. Amperometric procedures were developed and used for analyzing total residual concentrations of chlorine, ozone, and sulfite. Total residual chlorine concentrations as low as 10 μg/l. were readily measurable with a lower limit of detection of 1 μg/l.

SECTION II

RECOMMENDATIONS

Concentrations of total residual chlorine as low as 10 μg/l. had a detrimental effect on survival and reproduction of aquatic life. Ozonation and chlorination followed by dechlorination are suggested as disinfection alternatives for protecting aquatic life. Neutralization of chlorinated effluents by dechlorination is needed to alleviate adverse effects on aquatic life in the discharge areas. Additional investigations are needed to more fully define long-term no-effect levels for sulfite and other dechlorinating agents in receiving waters and the potential formation of harmful oxidation products by ozonation.

SECTION III

INTRODUCTION

Federal and most state pollution control regulations require disinfection of sewage effluents prior to discharge. By 1977 treatment of all municipal effluents will be required to achieve a fecal coliform level of less than 200 per 100 ml (U. S. Environmental Protection Agency, 1973). Historically, chlorination has been a widely practiced means of disinfection in this country. However, recent concern over the toxicity of chlorinated effluents to aquatic life has stimulated a re-evaluation of effluent-disinfection practices. The toxicity of chlorine to aquatic life in laboratory and field situations has been summarized recently by Brungs (1973). Besides the effects of chlorination, municipal wastewater toxicity has also been attributed by Esvelt _et al_. (1973) and Tsai (1973) to other components such as methylene blue active substances (MBAS), ammonia, and turbidity.

Ozonation and chlorination followed by dechlorination are alternative methods for disinfecting wastewaters. By means of short-term exposures Zillich (1972) and Esvelt _et al_. (1973) compared the toxicity of chlorinated and dechlorinated wastewaters to fish. In an earlier study Kelly _et al_. (1960) showed that the feeding activity of oysters was suppressed in both chlorinated and dechlorinated water but not in untreated or ultraviolet-sterilized water. Ozonation is being widely studied and appears to offer many advantages over the use of chlorine (Sliter, 1974). Although the effects of ozonating natural waters have been reported

(Benoit and Matlin, 1966; Institute of Maritime Fisheries, 1972; MacLean et al., 1973), very little has been done to determine the toxicity of ozonated effluents to higher aquatic life.

Collins and Deaner (1973) compared the toxicity of water immediately above and at points 100-300 ft downstream from a chlorinated wastewater plume. All king salmon fry died within 14 hr in the downstream waters (total chlorine residuals of 0.2-0.3 mg/l.), and none died in the upstream water. When chlorination was temporarily shut off at four wastewater treatment plants by the Michigan Department of Natural Resources (1971), the survival of brook trout and fathead minnows in cages below these plants was usually much higher.

The need for additional information on the toxicity of effluent disinfectants to aquatic life led to the present investigation. The purposes of this study were to compare with short- and long-term flow-through bioassays the toxicity of a domestic sewage effluent after (1) chlorination, (2) chlorination followed by dechlorination (hereafter called dechlorination), and (3) ozonation. At the same time tests were conducted with the nondisinfected effluent. The purpose of the short-term tests was to determine the lethality of these four effluent treatments to several fish and invertebrate species. The intent of the long-term tests was to establish concentrations of nondisinfected and disinfected effluents having no effect on three aquatic species over a life cycle.

The municipal effluent used in this study had the following necessary characteristics:

1) it had been subjected to secondary treatment;
2) chemical characteristics were typical of secondary municipal effluents throughout the country;
3) it did not contain toxic industrial wastes; and
4) its diluent water was similar in quality to the test water.

SECTION IV

GENERAL BIOASSAY AND ANALYTICAL PROCEDURES

The secondary sewage treatment plant of Silver Bay, Minnesota, on the north shore of Lake Superior (population 3,500) was chosen as the effluent source. The municipality's water supply is taken directly from Lake Superior, as is the water supply for the National Water Quality Laboratory. Silver Bay's secondary sewage treatment plant employs a trickling filter. The effluent disinfection treatments used in this study were designed to approximate current field conditions.

DISINFECTION

Effluent was collected by pump from the treatment plant's final settling basin before chlorination and was transported by truck to the National Water Quality Laboratory, a distance of 80 km. The three cylindrical steel tanks on the truck had a combined capacity for hauling 4,550 l. Upon arrival at the laboratory the sewage effluent was pumped into three 1.8-m-diameter elevated tanks, each with a storage capacity of 1,900 l. The stored sewage was kept at about 15° C by recirculating chilled lake water through stainless steel coils in the bottom of the storage tanks. The general effluent flow design for disinfection is given in Figure 1. From the storage tanks sewage was pumped into two stainless steel head boxes for distribution and for the disinfection steps before acute and chronic bioassay. When acute and chronic tests were conducted simultaneously, 3,200-3,800 l. per day of effluent were needed. Between 1,100 and 1,700 l. per day were used for the fathead minnow and amphipod chronic tests.

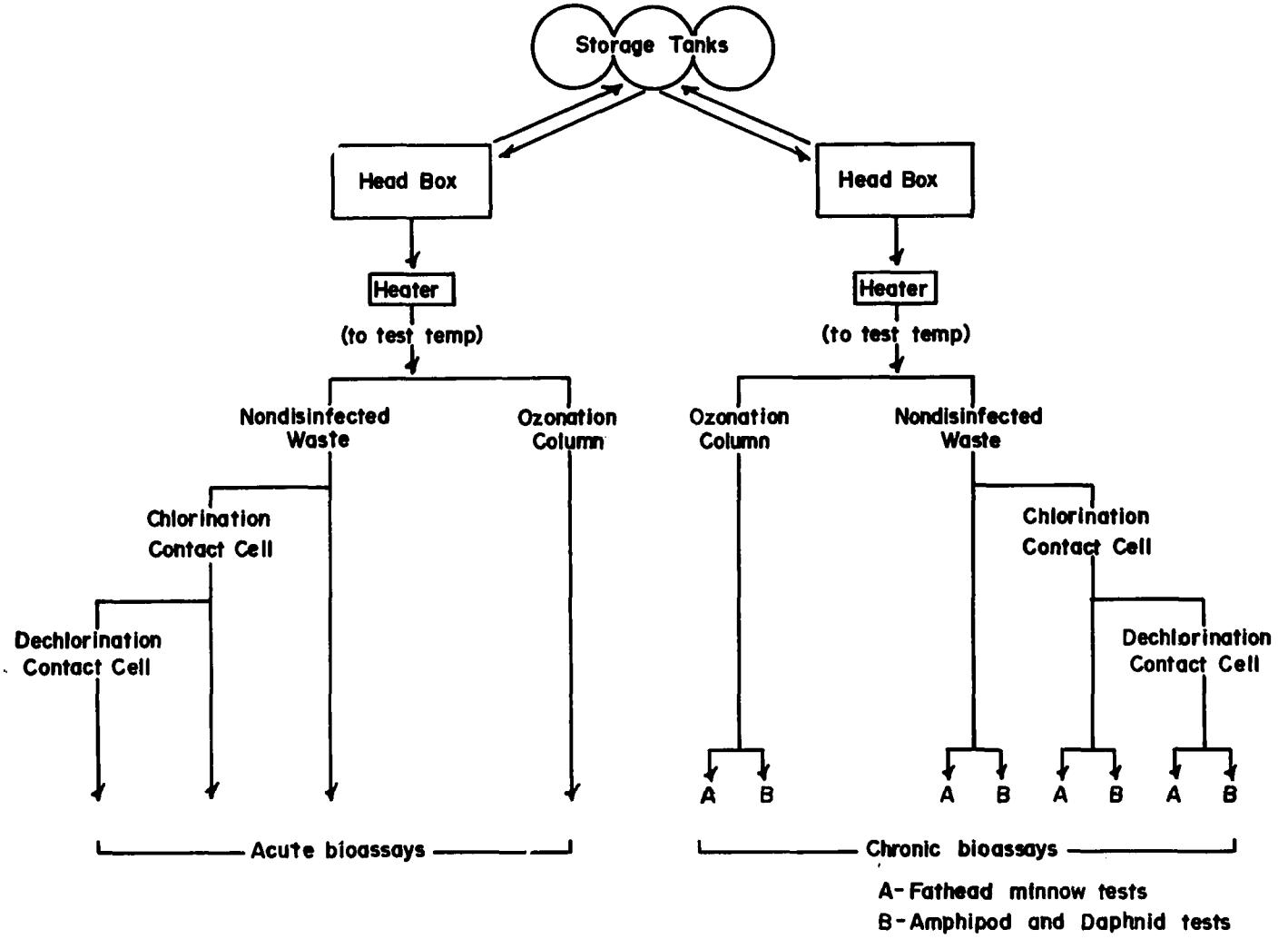

Figure 1. Sewage flow from storage tanks to diluter cells.

A series of glass chambers (after Brungs and Mount, 1970) was designed to separate the nondisinfected effluent from that being chlorinated and dechlorinated. Details of this apparatus employed for the chronic tests are shown in Figure 2. For chlorination, distilled water from a Mariotte bottle entered near the bottom of a glass tube. The bottom of the glass tube was equipped with a fritted glass disc for dispersing the entering chlorine gas. This saturated solution of chlorine was added to the nondisinfected effluent by a chemical-metering apparatus (Mount and Brungs, 1967). The concentration of chlorine in this solution was maintained at 3.5 $\pm$ 0.6 mg/ml. The chlorine contact chamber had a retention time of approximately 30 min. At the end of this chamber the chlorinated effluent was again separated for dechlorination and for delivery to the chlorinated effluent diluter. Sulfur dioxide gas was used for dechlorination with a chemical-metering apparatus similar to that used for chlorination. At the end of the dechlorination contact cell (approximately 40-min retention time) the effluent flow was split for delivery to the appropriate diluter.

The basic difference in the equipment used for acute tests was the absence of modified diluters at the end of the dechlorinated contact cell. A wooden enclosure surrounded each acute and chronic disinfection apparatus for venting the surrounding air to the outside of the laboratory. The chlorine dose was adjusted so that a total residual of approximately 1 mg/l. (orthotolidine colorimetric determination) remained after a 30-min retention time, which would result in a total coliform count of less than 1,000 cells per 100 ml. To maintain this residual, 3.8 $\pm$ 0.4 mg Cl/l. of sewage was used. The sulfur dioxide (dechlorination) dose rate was adjusted to neutralize the chlorine residual and provide an excess sulfite residual of approximately 4 ppm in case of an overdose of chlorine.

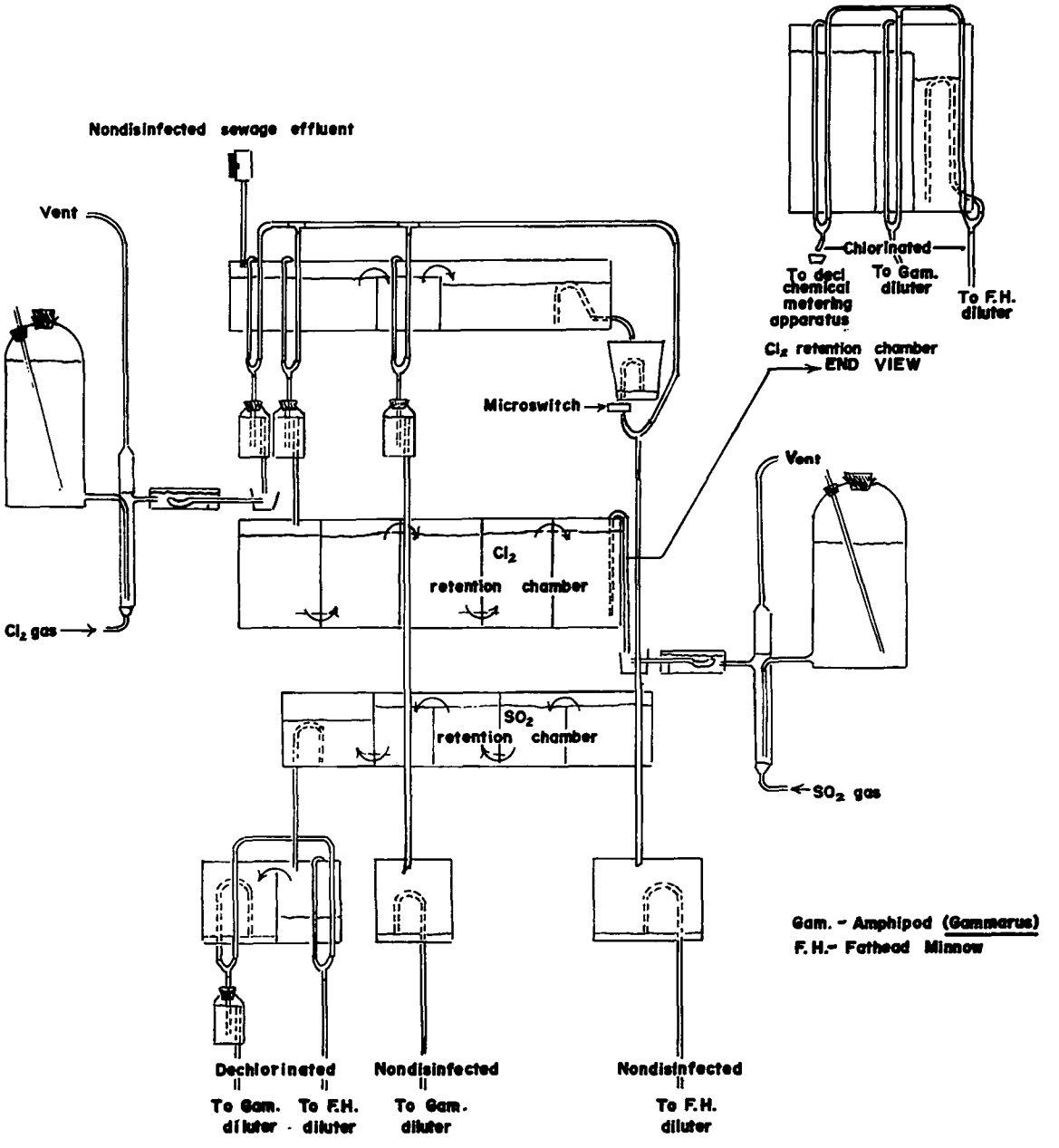

Figure 2. Chronic test apparatus used for volumetrically dividing, chlorinating, and dechlorinating the sewage effluent.

For disinfecting the effluent by ozonation separate ozonators were constructed for the acute and chronic tests. Ozone was produced by passing dried air between concentric reactor tubes with an applied voltage difference of 8,000 V. The voltage was obtained from a Jefferson luminous tube outdoor transformer operated at 65 V (60 cps). The ozone dose was adjusted by regulating the air-flow rate (98 $\pm$ 18 cc/min) to achieve a disinfection of usually less than 1,000 total coliforms per 100 ml. Details of the ozone generator are given in Figure 3. A concentration of approximately 32 mg O_3/l. in the dried air was introduced into the bottom of a contact column (Figure 4). Sewage effluent entered near the top of the contact column filled with glass marbles. The effluent retention time in the acute and chronic ozone contact columns was 7-8 and 10-11 min, respectively. The vented air after sewage contact contained 18 mg/l. residual ozone. To attain an effluent concentration of 1 mg/l. residual ozone, an ozone dose rate of approximately 5.7 $\pm$ 1 mg/l. of sewage was needed. The disinfected effluent was then split for delivery to the appropriate diluter.

The diluters used for the acute and chronic bioassays were patterned after Mount and Brungs (1967); the arrangement of diluter components was similar to that given by Arthur and Eaton (1971). The percentage sewage concentrations used for the tests are given in sections V and VI. Vacuum manifolds from the diluters were connected in series, and the acute and chronic diluters were separately connected to water aspirators. Nondisinfected sewage overflowing into a plastic box (Figure 2) triggered a microswitch, thereby opening a solenoid valve controlling the water aspirator. This event cycled the diluters and simultaneously closed solenoid valves delivering diluent waters. Both acute and chronic diluter cycle rates were maintained at approximately 5 min. Flow-splitting cells divided the test and control waters for transfer to the duplicate acute and chronic test chambers.

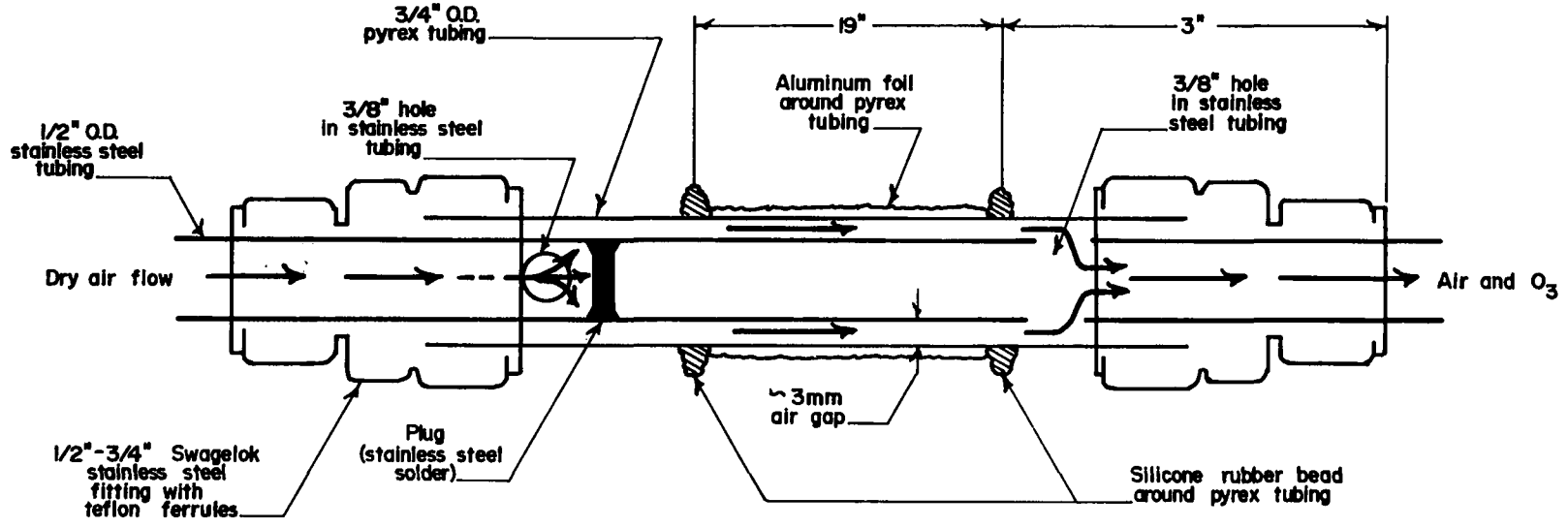

Figure 3. Ozone generator.

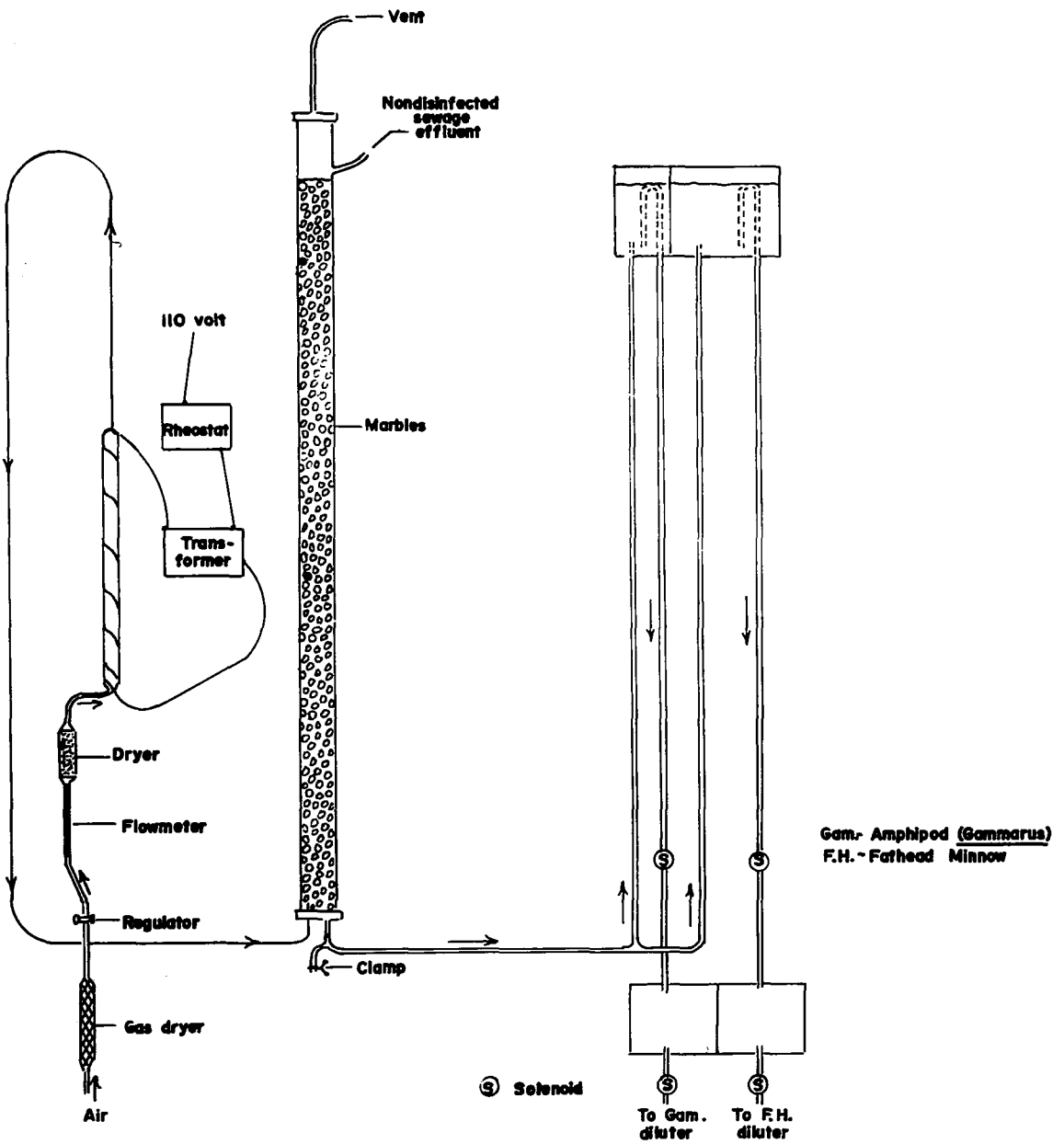

Figure 4. Apparatus used for volumetrically dividing and ozonating the sewage effluent in chronic tests.

ANALYTICAL METHODS

Routine procedures (American Public Health Association, 1971) were followed in characterizing this sewage effluent. Determinations of dissolved oxygen (D.O.), pH, biological oxygen demand (B.O.D.), total Kjeldahl nitrogen, total phosphates, and total, settleable, suspended, and volatile solids were made by treatment-plant personnel at the Silver Bay sewage treatment plant. Routine determinations of storage temperature, pH, D.O., total hardness, total alkalinity, total acidity, and chemical oxygen demand (C.O.D.) were generally made on each batch of sewage. Membrane filter techniques (American Public Health Association, 1971) were used throughout this study for determination of total and fecal coliform counts in the diluter cells and storage tanks and for determining the degree of disinfection achieved. These bacterial determinations were generally made two to three times weekly during the acute and chronic tests.

The variable chemical makeup of the effluent required daily adjustments in the chlorinated metering apparatus and air flow to the ozonators. Total chlorine residuals were measured both colorimetrically and amperometrically (American Public Health Association, 1971). Colorimetric determinations were made with a Hach water test kit. The sensitivity for determining the amperometric endpoint was significantly increased by using a polarograph and rotating platinum electrode. The electrode system consisted of a synchronous motor electrode rotator and a 2.5-cm-diameter platinum disc serving as the cathode. The anode was composed of a 0.5-cm-diameter platinum circle placed in close proximity to the cathode. The phenylarsine oxide titrant (5×10^{-4} N) was added with a microburet to a 50-ml sample buffered to pH 4 with sodium acetate-acetic acid and made 5×10^{-3} M with potassium iodide. The sample was mixed with a magnetic stirrer rotated slowly to minimize turbulence at the electrode surfaces. A polarograph sensitivity of 0.1

μa/mm (10–25 μa full scale) provided sufficient discrimination of the endpoint with additions of titrant as small as 0.01 ml. Ozone concentrations were determined volumetrically by using the same procedures. For both the residual chlorine and ozone measurements, samples were titrated immediately after the iodide and buffers were added. Complete descriptions of the analytical procedures are given by Andrew and Glass (1974).

Sulfur dioxide concentrations were measured as sulfite by using a solution of potassium iodate, 5×10^{-4} N, as the titrant and the amperometric method already described to detect the endpoint. The sample to be titrated was made approximately 0.2 M H_2SO_4 and 5×10^{-3} M KI. As titrant is added the sulfite is oxidized to sulfate, and an excess converts iodide to iodine for amperometric detection. Since iodide in the presence of oxygen is oxidized gradually at low pH, the titrations were performed within 3 min after the samples were taken.

Ammonia was determined colorimetrically with Nessler reagent and a microdiffusion concentration technique (Seligson and Seligson, 1951). In this procedure a 2-ml sample was placed into a 50-ml sample bottle, 2 ml of saturated K_2CO_3 solution was carefully pipetted into the bottle to form a layer under the sample, and the bottle was then quickly stoppered with a receiving rod whose ground glass tip had been coated by dipping into 0.5 M H_2SO_4. The ammonia diffused out of the sample and onto the acid-coated rod tip as the sample bottle was rotated horizontally at 50 rpm for 30 min. The receiving rod was transferred into a colorimeter tube containing 10 ml. of Nessler reagent, mixed, and after 10 min the optical absorbance at 420 nm was determined. Standards over the range of 5–30 μg ammonia (as N_2) were used.

Sodium levels were measured to determine the concentration of effluent actually delivered to the acute and chronic test tanks. A flame photometric method was initially used. Later, sodium concentrations were determined by direct aspiration of the aqueous samples into a Perkin-Elmer 403 atomic absorption spectrometer (Perkin-Elmer Corporation, 1971).

RESULTS

The modified amperometric methods developed for this study were more sensitive than procedures given by the American Public Health Association (1971). Fifty-milliliter samples of measured concentrations of tap water chloramines diluted serially five- to a hundredfold with distilled water gave recoveries of 77-107%. This corresponded to a mean standard error of approximately 15% in the range of 10-200 μg/l. total residual chlorine. A thousandfold dilution, or approximately 1 μg/l., gave recoveries of ± 100% corresponding to the lower limit of detection. Difficulties in measuring samples <10 μg/l. were partly due to inaccuracies in delivering ± 0.01 ml of titrant. For the sulfite measurements, titrations were reproducible and sensitive to 20 μg/l.

The effluent was not uniform and required daily monitoring. The chemical characteristics of the effluent are shown in Tables 1 and 2. In the treatment-plant analyses the greatest variations were found in the measurements of solids and B.O.D. The largest variations in the laboratory storage tanks were in total and fecal coliforms, C.O.D., acidity, and dissolved oxygen. The ammonia nitrogen concentrations analyzed from the diluters were similar, and all mean values were within 1 mg/l. of the mean storage tank concentration.

The concentrations of residual chlorine, ozone, and sulfite maintained in the effluent after disinfection are listed in Table 3. Total residual chlorine and ozone analyses were done daily, and sulfite cell

Table 1. CHEMICAL CHARACTERISTICS OF THE SEWAGE EFFLUENT COLLECTED AT THE SILVER BAY, MINNESOTA, MUNICIPAL TREATMENT PLANT

	Year and month												
	1971							1972					
	June	July	Aug.	Sept.	Oct.	Nov.	Dec.	Jan.	Feb.	March	April	July	Oct.
Sewage flow (10^4 l./day)	181 (126-254)[a]	154 (126-262)	131 (117-157)	131 (89-263)	225 (136-460)	242 (159-528)	145 (117-160)	120 (107-131)	115 (103-129)	161 (107-253)	362 (206-536)	200 (75-446)	145 (117-160)
Influent													
Solids (mg/l.)													
Settleable	7.5 (3.5-15.5)	7.6 (4.0-12.0)	8.0 (4.0-11.5)	9.3 (6.0-18.0)	5.2 (0.6-12.0)	5.1 (0.3-11.0)	7.5 (4.0-12.0)	8.8 (5.0-15.0)	8.6 (5.0-13.0)	7.8 (2.0-15.0)	3.7 (1.0-10.5)	6.1 (1.5-12.0)	8.4 (4.0-13.0)
Total	547 (402-984)	411 (259-619)	563 (449-869)	473 (352-704)	411 (309-639)	364 (262-460)	429 (364-508)	439 (292-554)	442 (291-494)	412 (353-472)	303 (244-416)	425 (320-566)	417 (285-505)
Total suspended	192 (93-342)	150 (84-250)	214 (148-354)	165 (120-326)	108 (30-194)	98 (36-203)	143 (96-147)	145 (92-206)	141 (105-180)	117 (75-168)	61 (33-96)	127 (22-278)	136 (88-175)
Total suspended volatile	135 (78-194)	121 (77-174)	180 (119-293)	137 (104-248)	90 (26-162)	81 (32-169)	117 (80-150)	124 (86-164)	121 (94-160)	96 (66-142)	48 (27-78)	103 (18-210)	117 (77-147)
B.O.D (mg/l.)	140 (87-213)	149 (92-180)	160 (129-184)	168 (139-215)	130 (52-218)	129 (60-275)	168 (112-222)	163 (128-242)	155 (111-184)	140 (81-168)	91 (60-132)	108 (46-183)	143 (112-186)
Effluent													
Solids (mg/l.)													
Settleable	0.4 (0.1-1.6)	0.4 (0.1-1.0)	0.2 (0.1-0.4)	0.2 (0.1-0.6)	0.2 (0.1-0.9)	0.1 (0.1-1.0)	0.4 (0.2-0.6)	0.3 (0.1-0.9)	0.2 (0.1-0.5)	0.3 (0.1-0.6)	0.5 (0.1-2.0)	0.5 (0.1-1.8)	0.2 (0.1-1.0)
Total	296 (256-380)	227 (85-300)	290 (240-568)	245 (209-279)	276 (236-306)	256 (210-282)	242 (213-267)	219 (194-268)	225 (186-247)	265 (213-315)	249 (203-295)	282 (217-357)	248 (171-294)
Total suspended	45 (26-67)	36 (25-60)	27 (24-33)	30 (23-40)	26 (21-33)	29 (21-43)	34 (14-49)	31 (25-38)	35 (27-42)	46 (37-71)	36 (24-51)	47 (23-97)	26 (21-35)
Total suspended volatile	35 (22-48)	29 (22-45)	24 (20-26)	26 (20-33)	20 (15-24)	21 (3-34)	29 (11-38)	27 (21-33)	31 (25-38)	39 (32-57)	30 (19-40)	35 (20-68)	22 (18-27)
B.O.D (mg/l.)	40 (24-61)	29 (13-41)	23 (19-28)	30 (20-39)	32 (23-55)	34 (25-60)	32 (24-90)	33 (29-39)	50 (38-58)	60 (48-69)	48 (34-55)	31 (40-62)	25 (18-27)
Dissolved oxygen (mg/l.)	5.5 (4.5-6.1)	6.0 (5.5-6.5)	5.7 (5.2-6.0)	5.0 (4.6-5.5)	5.2 (4.7-6.1)	5.7 (5.2-6.3)	5.5 (5.2-5.8)	6.1 (5.7-6.9)	6.2 (5.9-6.6)	6.9 (6.3-8.0)	8.7 (7.9-9.5)	5.2 (4.6-6.1)	5.6 (5.4-5.9)
pH (units)	7.4 (7.2-7.6)	7.3 (7.1-7.5)	7.2 (7.0-7.4)	7.1 (7.0-7.3)	7.2 (7.0-7.4)	7.1 (7.0-7.3)	7.1 (7.0-7.2)	6.9 (6.8-7.1)	6.9 (6.8-7.0)	6.9 (6.7-7.0)	7.3 (7.1-7.5)	7.4 (7.2-7.5)	7.6 (7.5-7.7)
Kjeldahl nitrogen (mg/l.)	15.1 (14.8-15.4)	14.5 (12.5-15.4)	11.4 (10.4-12.3)	13.7 (9.5-17.1)	13.6 (8.1-17.6)	13.6 (12.3-15.1)	16.1 (14.0-19.0)	19.5 (15.8-22.1)	18.4 (11.2-21.8)	20.6 (17.1-24.3)	14.4 (11.2-17.4)	12.3 (9.5-16.5)	14.0 (11.8-15.1)
Total phosphates (as PO_4 mg/l.)	11.0 (8.5-13.3)	15.3 (11.3-19.9)	13.1 (10.8-17.3)	14.5 (10.6-18.2)	10.2 (5.5-17.0)	8.8 (5.8-11.3)	7.3 (4.2-9.3)	13.8 (8.3-18.1)	13.2 (11.1-17.0)	13.8 (11.6-19.1)	7.8 (6.3-8.4)	10.5 (8.8-11.6)	10.5 (9.0-12.3)

[a]Range in parentheses.

Table 2. CHEMICAL CHARACTERISTICS OF THE SEWAGE EFFLUENT IN THE LABORATORY STORAGE TANKS

Item	Mean	N	Range
Temperature (°C)	14.2	87	9.0–20.6
pH	7.23[a]	95	6.94–7.59
Dissolved oxygen (mg/l.)	4.7	91	0.9–8.8
Total hardness (mg/l.)	124	95	74–190
Total alkalinity (mg/l.)	131	96	90–177
Total acidity (mg/l.)	16.7	95	3.1–36.3
Ammonia nitrogen (mg/l.)	6.9	49	2.3–13.5
C.O.D. (mg/l.)	71.1	126	25.8–141.4
Sodium (mg/l.)	17.8	31	14.3–23.0
Total coliforms (per 100 ml)	676,000	144	20,000–10,100,000
Fecal coliforms (per 100 ml)	57,800	69	700–620,000

[a]A median value.

Table 3. TOTAL RESIDUAL CHLORINE AND OZONE CONCENTRATIONS MEASURED FROM DILUTER TOXICANT-BEARING CELLS AND OZONE FROM COLUMN DURING THE ACUTE AND CHRONIC TESTS (milligrams/liter)

Test organism	Diluter toxicant-bearing cells (in mg/l.)												Ozone column Residual ozone (mg/l.)		
	Amperometric method									Orthotolidine method					
	Residual sulfite			Residual chlorine			Residual ozone			Residual chlorine					
	Mean	N	Range	Mean	N	Range	Mean	N	Range	Mean	N	Range	Mean	N	Range
Acute tests															
Fish															
Brook trout	1.35	4	0.6-2.21	1.63	8	1.39-1.94	0.03	5	0.01-0.04	0.86	8	0.71-0.99	—[a]	—	—
Coho salmon	—	—	—	1.74	6	1.48-2.03	0.04	7	0.01-0.08	0.85	7	0.58-0.98	—	—	—
Fathead minnow	—	—	—	1.24	7	0.39-2.73	0.06	6	0.01-0.07	0.50	7	0.17-1.50	—	—	—
Fathead minnow	—	—	—	1.99	8	1.69-2.25	—	—	—	1.06	8	0.65-1.25	—	—	—
White sucker	—	—	—	1.52	8	0.70-2.30	0.04	5	0.02-0.08	0.85	7	0.70-1.05	—	—	—
Walleye	—	—	—	1.98	7	1.77-2.13	0.17	7	0.05-0.30	0.99	6	0.89-1.14	—	—	—
Yellow perch	0.90	2	0.8-0.9	2.10	8	1.80-2.47	0.02	8	<0.001-0.10	1.16	6	1.00-1.40	1.95	4	1.16-2.33
Largemouth bass	1.30	2	1.1-1.4	1.97	8	1.61-2.26	0.02	1	—	1.28	7	1.06-1.48	2.07	3	2.04-2.10
Invertebrates															
Amphipod	—	—	—	1.77	8	0.03-2.60	0.02	6	<0.001-0.04	1.02	2	0.75-1.30	—	—	—
Amphipod	—	—	—	2.22	8	1.73-2.78	0.02	6	<0.001-0.02	1.55	2	1.55	2.32	6	1.72-2.67
Stonefly	0.43	2	0.38-0.48	1.73	8	1.19-1.98	0.16	7	<0.001-0.62	1.15	5	1.10-1.27	1.73	5	1.05-2.66
Caddisfly	—	—	—	1.74	8	1.42-2.03	0.01	3	0.004-0.02	—	—	—	—	—	—
Crayfish	—	—	—	1.98	11	1.80-2.27	—	—	—	1.16	12	0.80-1.35	—	—	—
Operculate snail	—	—	—	2.05	13	1.69-2.75	0.01	10	<0.001-0.06	1.14	9	0.65-1.55	2.20	9	1.72-2.71
Pulmonate snail	—	—	—	2.22	8	1.73-2.78	0.02	6	<0.001-0.18	1.55	2	1.55	2.32	6	1.72-2.67
Chronic tests															
Fathead minnows	4.30	25	0.1-14.3	2.30	332	<0.001-3.61	0.02	157	<0.001-0.17	1.02	102	0.05-3.15	1.03	133	<0.001-2.89
Amphipods	2.70	6	0.2-5.2	2.16	146	0.64-3.93	0.01	113	<0.001-0.11						
Daphnids															
Test 1	—	—	—	2.26	14	1.64-2.71	0.47	4	<0.001-1.0	—	—	—	1.62	7	0.50-2.37
Test 2	—	—	—	2.84	11	2.11-3.49	0.07	7	<0.001-0.32	—	—	—	1.20	6	0.45-2.87

[a]Not measured.

measurements and ozone column measurements were generally made weekly. Substantial amounts of residual ozone were lost in passage from the ozone contact column to the diluter cells (Table 3). Approximately 50% less total residual chlorine was measurable in the chlorinated diluter cells by the orthotolidine method than by the amperometric method. Excess total residual chlorine was not measurable in the dechlorinated effluent during any of the acute tests despite variations in the residual sulfite levels. On three occasions residual chlorine was measurable in the dechlorinated effluent for the chronic tests (see section VI).

The mean concentrations of total coliforms in the effluent before and after disinfection are given in Tables 4 and 5. After disinfection the mean coliform concentrations were less than 10,000 per 100 ml in 13 of 15 acute tests. About 10 times more coliforms were present in the dechlorinated than in the chlorinated effluent. Coliform concentrations were generally higher in the ozonated effluent than in the chlorinated effluent during the acute tests. During the fathead minnow and amphipod chronic tests all mean total coliform concentrations after disinfection were less than 10,000, and after the eighth week concentrations of coliforms were generally less than 1,000 per 100 ml. A loss in measurable coliform bacteria occurred during the flow of effluent from the storage tank to the nondisinfected diluter cells (Tables 4 and 5); no single component of the system was largely responsible. In the Daphnia chronic tests the mean total coliform concentrations after disinfection were <1,000 per 100 ml.

Disinfection of fecal coliforms in the acute and chronic test systems was greater than 99.9%. Mean fecal coliform counts were generally less than 10 per 100 ml in the treated effluents.

Table 4. CONCENTRATIONS OF TOTAL COLIFORMS IN THE STORAGE TANKS AND DILUTER CELLS DURING THE ACUTE TESTS (mean log counts per 100 ml)

Test organism	Storage tank			Nondisinfected			Dechlorinated			Chlorinated			Ozonated		
	Mean log	N	Range	Mean log	N	Range	Mean log	N	Range	Mean log	N	Range	Mean log	N	Range
Fish															
Brook trout	5.76	6	5.45-6.07	5.49	6	5.11-5.68	3.96	6	3.60-4.41	3.22	6	0.60-3.63	2.41	6	2.08-2.78
Coho salmon	5.91	6	5.43-6.49	5.71	6	5.53-6.01	3.97	6	3.36-5.31	3.07	6	2.41-3.79	3.14	6	2.51-4.20
Fathead minnow	6.02	5	5.30-6.40	5.59	6	5.08-6.18	4.02	5	3.60-4.43	4.24	5	4.02-4.54	3.98	6	3.49-4.74
Fathead minnow	5.86	6	5.62-6.30	5.83	6	5.30-6.05	–[a]	–	–	2.01	6	1.60-2.27	–	–	–
White sucker	5.40	6	5.15-5.76	5.24	6	4.95-5.41	2.99	6	2.62-3.59	1.95	6	1.60-2.29	1.54	6	1.00-2.10
Walleye	5.72	6	5.40-6.27	5.63	6	5.30-6.09	3.33	6	2.91-4.19	2.15	6	1.30-3.12	2.69	6	2.18-3.66
Yellow perch	5.81	6	5.34-7.00	5.59	6	4.85-7.05	2.87	6	2.66-3.11	1.66	6	1.45-1.88	2.36	6	1.30-4.09
Largemouth bass	5.44	6	4.85-5.94	5.50	5	5.00-5.83	2.68	5	2.26-3.04	1.40	6	1.08-1.83	2.03	6	1.48-3.63
Invertebrates															
Amphipod	6.51	6	5.63-7.20	6.18	6	5.85-6.41	4.26	6	3.28-5.52	3.34	6	3.18-3.54	3.82	6	3.34-4.24
Amphipod	5.63	6	4.95-6.13	5.44	6	4.90-6.05	–	–	–	1.99	6	1.56-2.46	–	–	–
Stonefly	5.44	5	4.95-5.88	5.31	5	4.85-5.89	2.77	5	2.40-3.85	1.58	5	1.20-1.94	1.99	5	1.00-2.36
Caddisfly	5.46	5	4.85-5.91	5.57	5	5.15-5.86	–	–	–	2.29	5	0.90-4.29	–	–	–
Crayfish	5.49	6	5.15-5.76	5.21	6	4.78-5.46	–	–	–	1.43	6	0.60-2.00	–	–	–
Operculate snail	5.80	9	4.95-6.36	5.73	9	4.90-6.94	2.83	9	2.08-3.67	1.99	9	1.60-2.27	2.28	9	1.00-3.94
Pulmonate snail	5.63	6	4.95-6.13	5.44	6	4.90-6.05	–	–	–	1.99	6	1.56-2.46	–	–	–

[a]Not measured.

Table 5. CONCENTRATIONS OF TOTAL COLIFORMS IN THE STORAGE TANKS AND DILUTER CELLS DURING THE CHRONIC TESTS (mean 4-week log counts per 100 ml)

Test organism and time (weeks)	Storage tank			Nondisinfected			Dechlorinated			Chlorinated			Ozonated		
	Mean log	N	Range	Mean log	N	Range	Mean log	N	Range	Mean log	N	Range	Mean log	N	Range
Fathead minnows															
0-4	5.46	4	5.18-5.79	5.51	4	5.11-5.76	3.95	4	3.48-4.45	2.20	4	1.72-2.58	3.68	4	2.87-4.91
5-8	5.82	9	5.43-6.49	5.46	9	4.85-5.86	3.58	9	2.15-4.85	2.02	9	1.08-2.38	2.79	9	2.15-3.32
9-12	5.57	11	5.15-6.27	5.43	11	4.85-6.45	2.76	11	0-4.26	1.51	11	0-2.66	2.55	11	1.48-3.48
13-16	5.62	9	5.15-7.00	5.36	9	4.85-5.56	1.89	9	3.04-1.48	1.60	9	2.17-0.90	2.05	9	1.48-3.46
17-20	5.63	6	4.95-6.30	5.16	6	4.67-5.91	1.70	6	1.00-2.62	1.87	6	1.20-2.62	2.12	6	1.00-3.76
21-24	5.29	10	4.85-5.88	4.99	10	4.48-5.84	1.91	10	1.00-3.81	1.25	10	0.60-2.26	1.75	10	0-3.15
25-28	5.53	12	5.11-5.93	5.31	12	4.70-5.79	1.75	12	0-4.31	1.51	12	0.60-2.40	1.30	12	0-2.08
29-32	5.51	9	4.70-6.05	5.25	9	4.48-5.99	1.42	9	0-2.36	1.72	9	0.60-2.57	1.57	9	1.00-2.53
33-36	5.56	10	4.60-6.26	5.07	10	4.00-5.74	1.67	10	0-2.59	0.93	10	0-1.51	1.56	10	1.00-2.26
37-40	5.66	9	4.30-6.77	5.36	9	4.00-6.53	1.66	9	0-3.73	1.45	9	0-4.09	2.23	9	0-4.21
41-43	5.64	7	4.60-6.64	5.59	7	4.60-6.56	1.76	7	0-3.04	1.45	7	0-3.08	2.56	7	2.08-3.15
Amphipods															
0-4	5.72	9	5.18-6.08	5.33	9	4.78-5.72	4.00	9	2.63-4.84	2.24	9	1.60-2.91	2.83	9	2.28-3.51
5-8	5.70	9	5.32-6.41	5.39	9	4.90-6.04	3.28	9	2.85-3.90	1.29	9	0-2.00	2.56	9	2.04-3.65
9-12	5.35	8	4.85-5.73	4.97	8	4.30-5.52	1.34	8	0-2.00	0.26	8	0-0.90	1.58	8	1.30-3.54
13-16	5.65	8	5.20-6.12	5.44	8	5.08-5.73	1.92	8	1.48-2.72	1.51	8	0.60-2.23	1.96	8	1.30-3.54
17-20	5.33	8	4.78-5.92	5.01	8	4.30-5.61	1.79	8	1.00-2.20	1.13	8	0.60-1.64	1.43	8	0-4.32

SECTION V

ACUTE TESTS

METHODS

Modified proportional diluters served as the water-delivery system for each of the four effluent treatments. The disinfection apparatus and the diluters are described in section IV. The nominal percentage sewage concentrations used for the nondisinfected, dechlorinated, and ozonated treatment tests were 100, 75, 50, 25, and 12%. For the chlorinated effluent tests, nominal sewage concentrations were set at one-half of the other three treatments. The diluent source was raw Lake Superior water piped directly to the laboratory. Duplicate test chambers were used for the five effluent concentrations and the controls. Diluter cycle rates were maintained at approximately 5 min throughout the tests. The test tanks held 15 l. of water and had a water-retention time of approximately 5 hr. Durotest (Optima FS) and widespectrum Gro-lux fluorescent tubes provided the light source, and a constant 16-hr photoperiod was used.

Acute exposure tests were conducted with seven fish and six invertebrate species. Sources and sizes of the test animals are given in Table 6. Before testing, all animals were acclimated in laboratory holding tanks for 10 days or more within 2° C of test temperature. Ten organisms randomly selected were introduced to each test tank so that 20 individuals of each species were tested at each concentration. Any damaged or diseased individuals were rejected before testing. Complete immobilization of the organisms was considered the endpoint and equated

Table 6. SOURCES AND SIZES OF ANIMALS USED FOR THE ACUTE TESTS

Test species	Source	Mean length (cm)
Fish		
Brook trout	National Water Quality Laboratory, Duluth, Minnesota	11.0
Coho salmon	Western Fish Toxicology Station, Corvallis, Oregon	8.7
Fathead minnow	National Water Quality Laboratory, Duluth, Minnesota	3.1
White sucker	State Fish Hatchery, Grand Rapids, Minnesota	6.7
Walleye	State Fish Hatchery, Aitken, Minnesota	6.1
Yellow perch	Park Lake, Mahtowa, Minnesota	4.9
Largemouth bass	Federal Fish Hatchery, New London, Minnesota	7.0
Invertebrates		
Amphipods (*Gammarus pseudolimnaeus*)	Eau Claire River, Gordon, Wisconsin	Adult stage
Stonefly (*Pteronarcys* sp)	Blackhoof River, Carlton County, Minnesota	Nymph stage
Caddisfly (*Hydropsyche* sp)	Pequaywan Lake Outlet, St. Louis County, Minnesota	Nymph stage
Crayfish (*Orconectes virilis*)	Eau Claire River, Gordon, Wisconsin	2.8
Operculate snail (*Campeloma decisum*)	St. Croix River, Gordon, Wisconsin	1.6
Pulmonate snail (*Physa integra*)	Eau Claire River, Gordon, Wisconsin	0.7

with death. Animals were not fed during the experiments, except the amphipods where leaves provided cover and food. Percentage mortality of each test species was determined after 12-, 24-, and additional 24-hr intervals thereafter through 7 days. Tests with operculate snails were extended for 14 days to obtain a 50% mortality level. Standard graphical procedures were followed for determining the concentrations resulting in 50% mortality levels (American Public Health Association, 1971). Round stainless steel cages were used for the stonefly and caddisfly tests. The cages were submerged in the test tanks where the water entered and were covered with stainless wire covers.

Routine chemical determinations were performed on the test-chamber waters. Dissolved oxygen was generally determined every other day, and pH analyses were made once a week on all test-chamber waters. The dissolved oxygen measurements were made with a YSI oxygen meter. Water temperatures were measured daily on two test chambers in each effluent treatment. The flame photometric sodium method was used for monitoring the nominal sewage concentrations delivered during these tests.

All residual chlorine and sulfite determinations were made on grab samples collected at mid-tank depth with a volumetric pipette. Total residual chlorine measurements were conducted daily during the 5-day work week by alternating between the duplicate test chambers. Residual ozone was not measurable in the highest concentration test-tank waters. Residual ozone and sulfite measurements were taken in the test waters only where additional tests were needed to establish lethal levels.

Three additional tests were conducted with the same general procedures as above:

1) The sewage effluent was chlorinated to a residual level of 16 mg/l. followed by neutralization with

sulfur dioxide gas. Any associated toxicity from this procedure was determined with fathead minnows at a test temperature of 18° ± 1° C.

2) Tests were also conducted on the concentrations of sulfite lethal to fathead minnows and amphipods. The SO_2 gas was added to the nonchlorinated effluent. The test water temperature was 19° ± 1° C.

3) Fathead minnow eggs were obtained from control waters in the chronic test and incubated in the two highest dechlorinated and ozonated test concentrations (100 and 75%) and controls.

Procedures to determine hatchability differences followed the recommendations of the National Water Quality Laboratory (1971). The test water temperature was 24° ± 1° C.

Two tests were also conducted to determine the concentrations of residual ozone lethal to fathead minnows under flow-through conditions. Special procedures were used for this test with the ozonated effluent. To maintain a residual the ozonated sewage was conveyed directly from the contact column to glass boxes each holding 650 ml. The boxes were arranged in a five-step sequence, in which ozonated sewage flowed from one box to the next. A diluter was not used for this test. Five fathead minnows were placed in each of the glass boxes and tested at a temperature of 23° ± 1° C. Test concentrations were not duplicated.

RESULTS

After 7 days the chlorinated effluent was appreciably more toxic to the test animals than the other effluent treatments tested (Table 7). More than 50% of the fish tested died in chlorinated effluent concentrations of 12-37%. Less than 50% of the operculate snails died in the highest concentration of chlorinated effluent. Mean mortality in the two highest dechlorinated and ozonated concentrations (100% and 75%) was less than 50% and 20%, respectively. In the highest nondisinfected

Table 7. MORTALITY OF SEVEN FISH AND SIX INVERTEBRATE SPECIES IN ACUTE TESTS OF VARIOUS CONCENTRATIONS OF FOUR EFFLUENT TREATMENTS AFTER 7 DAYS' EXPOSURE

(expressed as percentage)

Test species	Nondisinfected		Dechlorinated		Ozonated		Chlorinated				
	100%	75%	100%	75%	100%	75%	50%	37%	25%	12%	6%
Fish											
Brook trout	90	45	0	0	0	0	100	100	100	75	0
Coho salmon	0	0	0	0	0	0	100	100	100	100	35
Fathead minnow-Test 1	0	0	0	0	0	0	–	100	100	40	0
Fathead minnow-Test 2	–	–	–	–	–	–	100	100	100	100	15
White sucker	40	0	0	0	5	0	100	100	100	10	10
Walleye	25	35	20	20	20	0	100	100	100	45	0
Yellow perch	5	20	0	5	5	0	100	100	60	0	0
Largemouth bass	0	0	0	0	0	0	100	100	50	0	0
Invertebrates											
Amphipod test 1	25	5	45[a]	15	10	5	–	100	100	80	35
Amphipod test 2	–	–	–	–	–	–	100	100	95	30	5
Stonefly	45	–	–	–	5	5	100	85	70	25	5
Caddisfly	80	25	–	–	10	5	95	75	85	40	5
Crayfish[b]	–	–	–	–	–	–	50	30	5	20	5
Operculate snail[b]	0	0	0	0	0	0	10	0	10	0	0
Pulmonate snail	–	–	–	–	–	–	40	20	10	0	0

[a]Survival of controls became less than 90% after 72 hr.

[b]Tests with crayfish and operculate snails extended through 12 days and 14 days, respectively.

effluent concentration more than 50% of the test animals died in 2 of 12 tests, and more than 20% died in 6 of 12 tests. This higher mortality in the nondisinfected effluent may have been related to reduced dissolved oxygen concentrations in these test waters.

Progressively higher concentrations of effluent delivered to the test tanks reduced the dissolved oxygen concentration. The lowest dissolved oxygen concentrations were found in dilutions of the nondisinfected effluent. For any individual test the mean dissolved oxygen concentrations were above 3.0 mg/l. (about 30% saturation). Occasional measurements below this level were recorded in the nondisinfected tests with brook trout, coho salmon, sucker, amphipod (test 1), and stonefly. Mean dissolved oxygen measurements less than 50% saturation were typically found in the three highest concentrations of nondisinfected effluent and the two highest levels of dechlorinated effluent. Mean dissolved oxygen concentrations were consistently above 50% saturation in the ozonated and chlorinated test waters. The range in pH for all the test-chamber waters was from 6.9 to 7.9 units.

The chlorinated effluent was more acutely toxic to fish than to invertebrates. The 7-day TL50 concentrations of total residual chlorine for fish and invertebrates ranged from 0.08 to 0.26 and 0.21 to >0.81 mg/l., respectively (Table 8). The mean total residual chlorine concentrations throughout the entire test were used for calculating the TL50 values. Brook trout and coho salmon were the most sensitive fish species, and amphipods the most sensitive invertebrate. Flow-through acute tests were not done with *Daphnia magna*. Fish died more quickly than invertebrates in the chlorinated effluent. Most of the fish died in the first 24 hr of the test, but 24-48 hr were needed to kill 50% of the amphipods, 72 hr were needed for the stoneflies, and more than 6 days for the remaining invertebrate species tested. Fifty percent of the operculate snails (*Campeloma decisium*) died only after 14 days' exposure to the effluent.

Table 8. ACUTE TOXICITY OF CHLORINATED EFFLUENT TO SEVEN FISH AND SIX INVERTEBRATE SPECIES

Test species	Test temperature ± 1° C	Total residual chlorine TL50 concentrations (in µg/l.)								
		1-hr	12-hr	24-hr	48-hr	72-hr	96-hr	5-day	6-day	7-day
Fish										
Brook trout	14	—[a]	360	200	175	175	135	130	93	83
Coho salmon	14	—	230	230	105	102	102	95	95	83
Fathead minnow-Test 1	17	—	335	145	145	140	130	130	125	115
Fathead minnow-Test 2	18	>790	185	140	88	86	86	84	82	82
White sucker	16	>560	245	148	140	138	138	138	132	132
Walleye	12	—	267	220	173	150	150	150	150	150
Yellow perch	17	>850	365	245	205	205	205	205	205	205
Largemouth bass	17	>574	494	345	310	300	295	272	261	261
Invertebrates										
Amphipod-Test 1	17	—	—	900	630	470	330	250	220	210
Amphipod-Test 2	18	—	>810	>810	660	255	215	185	177	[b]
Stonefly	18	>780	>780	>780	>780	480	400	270	235	195
Caddisfly	18	>740	>740	>740	>740	>740	>740	>740	>740	>550
Crayfish[c]	17	—	>780	>780	>780	>780	>780	>780	>780	780
Operculate snail[c]	18	—	>810	>810	>810	>810	>810	>810	>810	[b]
Pulmonate snail	18	—	>810	>810	>810	>810	>810	>810	>810	>810

[a]Mortality levels not recorded.

[b]Survival of controls became less than 90%.

[c]Tests with crayfish and operculate snails extended through 12 and 14 days, respectively.

Sodium analyses (used as a tracer for determining diluter accuracy) were conducted during 7 of 13 acute tests. These analyses showed that all of the chlorinated and dechlorinated test concentrations and the highest three ozonated and two highest nondisinfected test concentrations were delivered within 2% of the nominal concentration. The remaining experimental nondisinfected and ozonated concentrations were within 5% and 10%, respectively.

Acutely lethal concentrations of SO_2 were established by additions of sulfur dioxide gas directly to the sewage effluent without prior chlorination, but no toxicity was found after neutralization of sewage chlorinated to high levels (16 mg/l.) followed by sulfur dioxide gas neutralization. The amphipods were about five times more sensitive to the measured residual sulfite than the fathead minnows. The 7-day TL50 values for fathead minnows and amphipods were 67 and 10 mg/l., respectively. The dissolved oxygen concentrations bracketing these TL50 values for fathead minnows and amphipods were 2.1-4.3 and 5.7-6.0 mg/l., respectively. The bracketing pH levels were 6.3-6.8 and 6.5-7.7 mg/l. Thus suppressed dissolved oxygen and decreased pH in the test waters may have contributed to the toxicity.

Residual ozone concentrations between 0.2 and 0.3 mg/l. were lethal to the fathead minnows. All deaths occurred in the first 1-3 hr of the test. One test was continued for 96 hr, the other for 7 days. The measured dissolved oxygen in the test cells where the deaths occurred had a supersaturation level of 120-125%. However, the next lower concentration had a similar dissolved oxygen supersaturation level without loss of fish.

Percentage hatch of fathead minnow eggs did not differ in the dechlorinated, ozonated, and control waters (Table 9). Although egg hatchability was the lowest in dechlorinated tank 100 A, the hatchability in the duplicate chamber (100 B) was similar to that in all other test chambers. Egg hatchability in the control waters was similar to that in the dechlorinated and ozonated treatments.

Table 9. HATCHABILITY OF FATHEAD MINNOW EGGS IN DECHLORINATED AND OZONATED TEST WATERS (acute exposure system)

Nominal percentage sewage concentration		Dechlorinated			Ozonated		
		Number of groups incubated	Mean percentage hatch	Range	Number of groups incubated	Mean percentage hatch	Range
100	A	3	37.3	8-60	3	67.3	58-86
	B	3	62.0	44-76	3	79.3	70-80
75	A	1	54.0	-54-	3	84.0	74-100
	B	2	54.0	34-74	3	86.0	66-98
0 (Control)	A	3	64.6	46-88	3	61.3	0-98
	B	3	60.0	36-82	3	70.6	64-84

SECTION VI

CHRONIC TESTS

METHODS

Modified proportional diluters served as the water-delivery system, and the diluent source was raw Lake Superior water. The nominal sewage concentrations used for tests of the nondisinfected, dechlorinated, and ozonated effluent were 20, 10, 5, 2.5, and 1.2%. For the chlorinated effluent, the nominal sewage concentrations were set at one-half of the other three treatments. Duplicate test chambers were used for each experimental test concentration and for the controls. The diluters cycled at approximately 5-min intervals throughout the tests. Flow-splitting cells divided each test concentration at a 2-to-1 ratio for delivery to adult and progeny test chambers. Durotest (Optima FS) and widespectrum Gro-lux fluorescent bulbs provided the light source for the chronic tests.

The fathead minnow chronic test was started on June 3, 1971. Thirty-five hatched fry, 1-20 days old, were randomly assigned to each adult (27-l.) tank. Fry were obtained from National Water Quality Laboratory cultures. Mean test-chamber retention time was maintained at about 4 hr, and water temperature was maintained at 24° ± 2° C. Additional procedures for this test followed the methods recommended by the National Water Quality Laboratory (1971). The chambers were cleaned daily 1-2 hr after feeding, since excess food temporarily lowered the residual chlorine test concentrations. The first spawning was recorded on October 27. Hatched larvae were either discarded or placed into corresponding progeny (14-l.) tanks. Spawning of the minnows ceased on March 24, 1972, and the test terminated on April 1, 1972.

Adult amphipods, Gammarus pseudolimnaeus Bousfield, were collected from the Eau Claire River near Gordon, Wisconsin. Fully gravid females were isolated in the laboratory and 35 newborn young, 1-6 days old, were randomly placed on June 25, 1971, into each of 48 progeny tanks holding 7.4 l. of water. Test temperature was maintained at 17.5° ± 1° C. Mean retention time for the progeny chambers was approximately 4 hr. After 60 days the amphipods were transferred to corresponding adult tanks with a water capacity of 14.7 l. and impartially thinned to 15 individuals per tank. The photoperiod was the same as that used for the fathead minnow chronic test. The amphipods matured to adults in early September and started producing young that continued until test termination on November 10-11, 1971. Measurements of head capsule length after 30 days' exposure in the progeny chambers were used for determining growth of the second generation young.

The diluters and test chambers housing the fathead minnows and amphipods were separately encompassed by black plastic enclosures to minimize external physical disturbances. Laboratory air temperatures generally ranged from 17° to 24° C. The amphipod enclosures were air conditioned to reduce air supersaturation in the test waters. However, during the 14th week of the test air bubbles were observed clinging to the external surfaces of the amphipods, making them more buoyant. Aeration of the test water during this time eliminated the air-bubble problem.

Daphnia magna for the chronic tests were obtained from laboratory cultures. Test temperature was maintained at 22° ± 1° C. The adult amphipod chambers and the same mean water-retention times were used for this test. Ten 1-day-old (16-24-hr) daphnids were placed into each chamber for tests of 2 weeks' duration during July and October 1972. To maintain the daphnids in the control tanks, food was continuously added with a peristaltic (Durum Co.) pump to the diluent water head box. Food source used for the July test was a 20:1 (31.5 g) mixture of Glencoe No. 2 trout

Starter and powdered dry grass and cereal leaves (Cerophyl) prepared according to procedures of Biesinger and Christensen (1972). Fleischmann's active dry yeast (7-8 g) was used for the October test. Each food mixture was suspended in 9 l. of lake water. Performance of the pump in delivering the food into the diluent test water was monitored daily, and calculated respective amounts of food present were 1.7 $\pm$ 0.6 and 1.4 $\pm$ 0.7 mg/l. per day. Reproduction (parthenogenetic) occurred in the test chambers after 1 week with a production of one or two generations by termination. At test completion all test-chamber waters were separately siphoned through a 60-wire-mesh stainless steel basket to collect the daphnids for preservation in 70% ethanol. All daphnids were counted in subsamples in petri dishes subdivided into 1-cm^2 grids; uniform microscope counting procedures were used.

Routine chemical analyses, in addition to those used for the acute tests, were performed on the chronic test-chamber water (American Public Health Association, 1971). For the fathead minnow and amphipod tests dissolved oxygen analyses were usually conducted every other day; pH, total hardness, total alkalinity, and acidity generally were measured twice weekly; and water temperatures were recorded daily on two test chambers in each effluent treatment. Sodium determinations were generally made weekly with the flame photometric procedure until mid-November and thereafter with the atomic absorption procedure. For the Daphnia tests the only routine analyses conducted were for dissolved oxygen and pH; they were done weekly on six test waters in each effluent treatment.

Samples for determining total residual chlorine, ozone, and sulfite were collected from the test waters; protocol as described for the acute tests was followed. Total residual chlorine analyses were conducted daily during the workweek. The total residual sulfite procedure was not developed until after the 14th week for the fathead minnow and amphipod tests, and then sulfite was measured weekly. As in the acute tests, residual ozone was not measurable in any of the waters of the chronic tests.

The amphipod and daphnid results were statistically analyzed with computation procedures found in Biomedical Computer Programs (Dixon, 1971). The production of Daphnia (young per adult) was compared with a 3-way analysis of variance. The variables were treatment method, concentration, and test trial. Fathead minnow survival and the amphipod reproduction index were examined with a 2-way analysis of variance. Because the 20 and 0.6 nominal percentage effluent concentrations were not uniformly used in all four of the effluent test treatments, these two concentrations were not analyzed with these procedures. Comparisons of differences among the disinfected and nondisinfected effluents and differences within an effluent group were made according to Dunnett's (1955) method.

RESULTS

Results of the routine chemical analyses of fathead minnow and amphipod test waters are given in appendix Tables 1-2. Increasing amounts of sewage in the test tanks progressively lowered the dissolved oxygen concentrations and pH and increased the levels of total hardness, alkalinity, and acidity. Mean dissolved oxygen concentrations in the test waters were all above 50% saturation. An individual measurement less than 30% saturation occurred only once during the fathead minnow test and was found in the highest concentration of nondisinfected effluent (20%).

The concentrations of total residual chlorine and sulfite maintained in the respective chlorinated and dechlorinated effluent concentrations are presented in appendix Tables 3-4. The duplicate chambers in each of the five concentrations of chlorinated effluent had slightly different mean concentrations of residual chlorine. However, the calculated standard deviations were generally similar for each corresponding duplicate tank pair. Concentrations of total residual sulfite maintained in the dechlorinated effluent test chambers were more variable than the residual chlorine concentrations.

The dechlorination apparatus failed on two occasions during the fathead minnow and amphipod chronic tests (on July 8-9 and September 5-6, 1971) and on October 18 during the second Daphnia test. During these times residual chlorine concentrations of 0.2-1.1 mg/1. were measured in the dechlorinated effluent. During the September failure 0.05-0.15 mg/1. residual chlorine was found in the highest dechlorinated test concentration. No failures were recorded with the dechlorination apparatus used for the acute tests.

Analysis of sodium in the adult test-tank waters showed that the mean sewage concentrations actually delivered were generally within 5 and 2.5% of the nominal levels set for the respective fathead minnow and amphipod chronic studies. Individual determinations overlapped the next corresponding nominal test level about 15% of the time in the two highest ozonated effluent concentrations. No similar overlap occurred with the other three effluent treatments.

Fathead Minnow Chronic Test

More fathead minnows died in dilutions of chlorinated effluent than in the other effluent treatments (appendix Table 5). Most deaths occurred during the first 10 weeks of the test. During this time minnow survival was significantly lower ($P<0.05$) in the two highest chlorinated concentrations ($\geq$ 42 µg/1. mean total residual chlorine). Survival in these two concentrations was also lower at test termination.

No spawning occurred in the highest chlorinated effluent concentration (110 µg/1.) (Table 10). No differences were observed in the spawning results at the other test concentrations. Six deformed females were found at test termination. These deformed females were not limited to any one effluent treatment or test concentration, but were included in the spawning calculations. The low egg hatchability in chlorinated

Table 10. SURVIVAL AND REPRODUCTION OF FATHEAD MINNOWS DURING 43 WEEKS' CONTINUOUS EXPOSURE TO NONDISINFECTED AND DISINFECTED EFFLUENTS

Nominal percentage sewage concentration		Final number surviving (male/female)	Number of excess males removed (Nov–Jan)	Total eggs and spawnings	Eggs per female	Spawnings per female	Egg Hatchability: Number of spawnings	Egg Hatchability: Mean percentage hatch
				Nondisinfected				
20	A	4/7[a]	3	6817 (50)	974	7	22	66
	B	5/5	3	7377 (60)	1475	12	12	53
10	A	4/1	5	244 (2)	244	2	1	80
	B	4/5	7	8808 (64)	1762	13	14	64
5	A	4/6	5	7822 (64)	1304	11	17	82
	B	4/6	1	10586 (90)	1764	15	15	78
2.5	A	4/5	4	11546 (88)	2309	18	17	59
	B	4/5	2	9407 (62)	1881	12	11	71
1.2	A	4/4	2	5426 (62)	1357	16	16	72
	B	3/10	0	16524 (132)	1652	13	22	61
0 (Control)	A	4/4	4	5950 (64)	1488	16	14	84
	B	5/5	1	9148 (74)	1830	15	12	69
				Chlorinated[b]				
10	A	1/1	0	0 (0)	0	0	—	—
	B	0/1	0	0 (0)	0	0	—	—
5	A	3/2	0	7435 (55)	3717	28	14	75
	B	3/2	0	4833 (29)	2416	14	9	20
2.5	A	4/6	2	7203 (72)	1200	12	24	86
	B	4/5	4	7193 (73)	1439	15	22	87
1.2	A	4/9	2	7661 (74)	851	8	18	83
	B	3/6	0	9626 (97)	1604	16	19	75
0.6	A	4/5	4	7550 (69)	1510	14	18	81
	B	3/8	3	3726 (36)	466	4	13	85
0 (Control)	A	4/3	3	8250 (68)	2750	23	15	83
	B	4/9	1	5038 (35)	560	4	11	71

Table 10 (continued). SURVIVAL AND REPRODUCTION OF FATHEAD MINNOWS DURING 43 WEEKS' CONTINUOUS EXPOSURE TO NONDISINFECTED AND DISINFECTED EFFLUENTS

Nominal percentage sewage concentration		Final number surviving (male/female)	Number of excess males removed (Nov-Jan)	Total eggs and spawnings	Eggs per female	Spawnings per female	Egg Hatchability: Number of spawnings	Egg Hatchability: Mean percentage hatch
				Dechlorinated				
20	A	4/5	4	17579 (114)	3516	23	31	48
	B	3/9	0	12480 (109)	1387	12	25	43
10	A	4/10	0	9238 (70)	924	7	12	73
	B	4/6	3	10099 (77)	1683	13	25	72
5	A	4/7	2	17110 (103)	2444	15	25	66
	B	4/8	3	7272 (75)	909	9	20	82
2.5	A	4/6	1	10291 (99)	1715	16	28	73
	B	4/6	1	7604 (62)	1267	10	12	79
1.2	A	4/6	4	7018 (63)	1170	10	18	84
	B	4/1	4	1297 (12)	1297	12	3	60
0 (Control)	A	4/5	0	8418 (78)	1684	16	18	69
	B	5/6	2	3654 (26)	609	4	12	87
				Ozonated				
20	A	4/6	5	7033 (77)	1172	13	14	71
	B	4/6	5	8595 (81)	1432	14	15	87
10	A	5/4	3	8039 (71)	2010	18	17	83
	B	4/6	4	8776 (67)	1463	11	13	60
5	A	5/9	1	8175 (78)	908	9	15	73
	B	4/5	3	10001 (101)	2000	20	17	73
2.5	A	6/7	0	8822 (91)	1260	13	18	75
	B	5/8	1	5472 (56)	684	7	17	54
1.2	A	4/5	4	6342 (64)	1268	13	14	53
	B	4/8	4	9802 (89)	1225	11	15	71
0 (Control)	A	5/5	3	7061 (86)	1412	17	15	69
	B	4/1	4	4705 (25)	4705	25	10	82

[a]Initial number of fathead minnows per tank was 35, thinned to 15 individuals after 60 days.

[b]Mean total residual chlorine levels for the six test concentrations (in µg/l.) were 110, 42, 14, 6, 3, and nonmeasurable, respectively.

chamber 5B may be due to factors other than residual chlorine. For unknown reasons spawning by the minnows was not confined to the undersurface of the concrete tiles. Thirty-six per cent of the spawning occurred on the egg cup undersurfaces and on two or three occasions on standpipe screens.

Overall egg hatchability was lower in the highest dechlorinated concentration (Table 10). For comparison, seven groups of eggs spawned on different days in one of the highest dechlorinated test chambers were incubated in a control chamber. The average hatchability was 87% (range 78-90%). By contrast, two groups of eggs from the control chambers incubated in one of the highest dechlorinated chambers gave hatchability values of 56% and 54%.

Survival data for the second generation of fathead minnow larvae after 30 days' exposure in progeny tanks are given in appendix Table 6. Two to five trials were conducted at each effluent test concentration. Final survival varied widely. The lowest survivals of minnow larvae occurred in the two highest chlorinated concentrations containing mean total residual chlorine levels of $\geq$88 µg/l. Survival was reduced in mean chlorine levels of 21 µg/l., but the variation in final survival was much greater (2.5-47.5%).

Amphipod Chronic Test

Amphipod survival was noticeably lower after 10 weeks in chambers with the highest chlorinated and dechlorinated effluent concentrations (appendix Table 7). Poor survival in the highest dechlorinated concentration was probably due to failures of the dechlorinator. Survival after 16 weeks of the test was also lower in the second highest chlorinated concentration (54 µg/l. mean total residual chlorine).

Reproduction was significantly reduced in the three highest chlorinated effluent concentrations. Second generation young were not produced at either the 123 or 54 μg/l. mean concentrations (Table 11). The reproductive index was significantly lower in the 19 μg/l. chambers as compared to the controls ($P < 0.05$). The highest measured level of residual chlorine having no effect on the amphipods was 12 μg/l.

Survival and growth of the second amphipod generation were similar after 30 days in all concentrations (appendix Table 8). The second generation appeared to survive somewhat better overall (83.5%) than did the original adults after 30 days (64.4%). Survival of both generations was generally similar during the first 30 days of exposure.

Daphnia Chronic Test

Greater numbers of the Daphnia initially added to test chambers survived to termination in the first of the two tests performed (Table 12). Survival and reproduction of the daphnids were similar in the control chambers with the two different food sources used. Elimination of the daphnids during the first week of the second test at the highest dechlorinated effluent concentration was probably related to failure of the dechlorinator.

Daphnia did not survive the 2 weeks' exposure in the three highest chlorinated effluent concentrations. In these three concentrations death occurred during the first week of exposure, and no young were recoverable at test termination. Increased daphnid numbers at 12 days in a few of the disinfected and nondisinfected effluent concentrations were due to counting errors. Calculation procedure used for determining young per adult is given in Table 12, and the results were statistically analyzed. The highest level of total residual chlorine having no significant effect on Daphnia was 2-4 μg/l. ($P < 0.05$).

Table 11. SURVIVAL AND REPRODUCTION OF AMPHIPODS AFTER 20 WEEKS' CONTINUOUS EXPOSURE TO NONDISINFECTED AND DISINFECTED EFFLUENTS

Nominal percentage sewage concentration		Final male/female ratio	Final gravid females	Total number young produced	Total births	Young per female	Births per female	Reproductive[a] index
				Nondisinfected				
20	A	6/4[b]	4	431	15	107.8	3.8	4.8
	B	6/9	3	682	14	75.8	1.6	1.9
10	A	4/6	2	731	17	121.3	2.8	3.2
	B	7/8	5	585	13	73.1	1.6	2.3
5	A	5/7	4	783	20	111.9	2.9	3.4
	B	7/8	8	649	15	81.1	1.9	2.9
2.5	A	7/5	3	883	23	176.6	4.6	5.2
	B	5/5	5	399	13	79.8	2.6	3.6
1.2	A	7/7	6	393	14	56.1	2.0	2.9
	B	4/7	6	117	6	16.7	0.9	1.7
0 (Control)	A	5/7	2	56	3	8.0	0.4	0.7
	B	7/4	2	19	1	4.8	0.25	0.8
				Chlorinated[c]				
10	A	0/0	0	0	0	0	0	0
	B	0/0	0	0	0	0	0	0
5	A	3/2	0	0	0	0	0	0
	B	4/1	1	0	0	0	0	1.0
2.5	A	6/5	1	42	2	8.4	0.4	0.6
	B	4/6	0	77	4	12.8	0.7	0.7
1.2	A	2/7	4	518	16	74.0	2.3	2.9
	B	5/11	9	444	16	40.4	1.5	2.7
0.6	A	4/7	6	430	16	61.4	2.3	3.2
	B	6/8	1	360	11	45.0	1.4	1.5
0 (Control)	A	6/6	5	192	10	32.0	1.7	2.5
	B	8/5	3	102	6	20.0	1.2	1.8

Table 11 (continued). SURVIVAL AND REPRODUCTION OF AMPHIPODS AFTER 20 WEEKS' CONTINUOUS EXPOSURE TO NONDISINFECTED AND DISINFECTED EFFLUENTS

Nominal percentage sewage concentration		Final male/female ratio	Final gravid females	Total number young produced	Total births	Young per female	Births per female	Reproductive[a] index
				Dechlorinated				
20	A	2/5	4	151	4	30.2	0.8	1.6
	B	0	0	48	2	—	—	0
10	A	8/4	4	341	8	85.2	2.0	3.0
	B	7/4	3	422	11	105.5	2.8	3.5
5	A	8/3	3	283	8	94.3	2.7	3.7
	B	3/6	5	487	11	81.2	1.8	2.7
2.5	A	4/11	7	740	22	67.3	2.0	2.6
	B	8/9	8	907	23	100.8	2.6	3.4
1.2	A	6/6	5	482	13	80.3	2.2	3.0
	B	8/6	6	501	16	83.5	2.7	3.7
0 (Control)	A	8/6	5	290	12	48.3	2.0	2.8
	B	9/4	4	183	7	45.8	1.8	2.8
				Ozonated				
20	A	7/5	3	818	21	163.6	4.2	4.8
	B	8/5	2	429	12	85.8	2.4	2.8
10	A	4/4	4	487	14	121.8	3.5	4.5
	B	6/5	1	722	20	144.4	4.0	4.2
5	A	4/7	4	442	17	63.1	2.4	3.0
	B	7/5	3	478	14	95.6	2.8	3.4
2.5	A	5/8	5	502	16	62.8	2.0	2.6
	B	3/9	5	465	17	51.7	1.9	2.4
1.2	A	9/5	3	708	21	141.6	4.2	4.8
	B	5/5	1	679	19	135.8	3.8	4.0
0 (Control)	A	9/3	2	164	5	54.7	1.7	2.3
	B	5/8	5	46	2	5.8	0.25	0.9

[a]Determined by adding total births (spawnings) plus final gravid females divided by final number of surviving females.

[b]Initial number of amphipods per test was 35, thinned to 15 individuals after 60 days.

[c]Mean total residual chlorine levels for the six test concentrations (in µg/l.) were 123, 54, 19, 12, 8, and nonmeasurable, respectively.

Table 12. SURVIVAL AND REPRODUCTION OF DAPHNIA MAGNA DURING 2 WEEKS' CONTINUOUS EXPOSURE TO NONDISINFECTED AND DISINFECTED EFFLUENTS

Nondisinfected						Dechlorinated				Ozonated				Chlorinated[a]					
Nominal percentage sewage concentration		Survival after 7 days	Survival after 12 days	Total number found	Young[b] per adult	Survival after 7 days	Survival after 12 days	Total number found	Young[b] per adult	Survival after 7 days	Survival after 12 days	Total number found	Young per adult	Nominal percentage sewage concentration		Survival after 7 days	Survival after 12 days	Total number found	Young[b] per adult
First test[c]																			
20	A	10	8	1404	174	10	10	1380	137	10	9	1223	135	10	A	0	—	0	0
	B	10	8	1101	137	10	10	928	92	10	9	1100	121		B	0	—	0	0
10	A	10	8	977	121	9	9	1207	133	10	9	841	92	5	A	0	—	0	0
	B	10	9	1525	168	10	10	1496	149	8	9	757	83		B	0	—	0	0
5	A	10	7	915	130	10	9	1239	137	10	8	1082	134	2.5	A	0	—	0	0
	B	10	10	1850	184	8	8	858	106	10	6	572	94		B	0	—	0	0
2.5	A	9	9	1368	151	10	7	834	118	10	8	492	60	1.2	A	5	3	171	56
	B	7	6	498	82	10	9	812	89	7	6	318	52		B	9	8	596	74
1.2	A	8	8	790	98	9	10	893	88	10	8	287	35	0.6	A	9	5	398	79
	B	9	9	348	38	10	8	832	103	9	4	444	110		B	9	6	211	34
0 (Control)	A	10	8	589	73	10	9	595	65	10	9	852	94	0 (Control)	A	7	7	565	80
	B	8	8	704	87	10	8	597	74	10	7	476	67		B	10	10	983	97
Second test[c]																			
20	A	9	9	698	77	0	—	0	0	4	4	383	95	10	A	0	—	0	0
	B	9	8	374	46	0	—	0	0	9	9	11	<1		B	0	—	0	0
10	A	7	6	305	50	9	9	351	38	6	5	316	62	5	A	0	—	0	0
	B	3	2	96	47	2	2	106	52	6	6	103	16		B	0	—	0	0
5	A	6	5	250	49	10	10	713	70	7	6	336	55	2.5	A	0	—	0	0
	B	7	5	324	64	9	9	721	79	9	9	168	18		B	0	—	0	0
2.5	A	7	8	534	66	10	9	391	42	10	10	587	57	1.2	A	0	—	0	0
	B	9	9	637	70	10	10	855	84	9	6	154	25		B	5	5	382	75
1.2	A	7	8	268	32	10	8	577	71	8	8	199	24	0.6	A	10	9	326	35
	B	10	10	214	20	8	8	455	56	9	8	82	9		B	10	10	743	73
0 (Control)	A	10	10	848	84	10	9	371	40	8	6	480	79	0 (Control)	A	10	10	938	93
	B	4	4	319	79	10	8	402	49	10	10	271	26		B	7	7	676	96

[a]Mean total residual chlorine levels for the six test concentrations (in μg/l.) were: Test 1- 114, 50, 14, 4, 2, and nonmeasurable respectively: Test 2- 136, 38, 7, 2, nonmeasurable, and nonmeasurable, respectively.

[b]Young per adult = (total number found minus adults alive at 12 days) divided by (adults alive at 12 days).

[c]For both tests the initial number of daphnids per test chamber was 10.

SECTION VII

DISCUSSION

Disinfection with chlorine and ozone effectively reduced coliform bacterial levels by 99.9%. After retention, the levels of total and fecal coliforms were usually below 1,000 and 100 per 100 ml, respectively. The disinfected effluents delivered to the diluters for the bioassays had respective mean residual chlorine, sulfite, and ozone levels of 1.0-2.1, 0.4-4.3, and 0.0-0.5 mg/l. Residual ozone rapidly disappeared from the effluent since residual concentrations of 1.0-2.0 mg/l. were measured from the bottom of the ozone contact column. Shuval et al. (1973) found a marked regrowth of coliform bacteria in both chlorinated and dechlorinated wastewaters. In our study coliform regrowth was not clearly demonstrated, probably because of the short retention times employed.

Only the chlorinated effluent consistently showed damaging effects to all test species. The 7-day TL50 concentrations of total residual chlorine ranged from 0.08 to >0.81 mg/l. for the test animals. Fish were more sensitive than the invertebrate species during short-term exposures to chlorine. These results agree closely with Brungs' (1973) conclusion that salmonids are the most acutely sensitive to chlorine; next most sensitive are warmwater fish and invertebrate species. The residual chlorine TL50 values for fathead minnows and amphipods agree closely with those given by Arthur and Eaton (1971). Also, the acute toxicity of residual chlorine for fathead minnows parallels that reported by the Michigan Department of Natural Resources (1971) and Zillich (1972). The residual chlorine 96-hr TL50 for rainbow trout by the Michigan Department of Natural

Resources (1971) at two plants was 0.023 mg/l., which is lower than that reported for brook trout in the present study (0.083 mg/l.). For additional comparisons the reader is referred to the review by Brungs (1973) and recent compilations by Becker and Thatcher (1973).

This study also showed that the chlorinated effluent had long-term effects on survival and reproduction of fathead minnows, amphipods (Gammarus pseudolimnaeus), and Daphnia magna. Chlorinated effluent concentrations of 10% and 5% greatly reduced survival of fathead minnows and eliminated daphnid survival. Chlorinated effluent concentrations of 2.5% significantly affected amphipod reproduction, and no daphnids survived at this concentration. The highest mean concentrations of total residual chlorine having no effect on fathead minnows, amphipods (Gammarus), and Daphnia magna were 14, 12, and 2-4 μg/l., respectively.

Daphnia magna was the most sensitive species during life-cycle tests in the chlorinated effluent. Daphnid populations that survived to adulthood reproduced successfully. Arthur and Eaton (1971) exposed Gammarus pseudolimnaeus and fathead minnows to chlorinated (as chloramines) lake water for 15 and 21 weeks, respectively. The effect concentration for the amphipods was 3.4 μg/l. and 43 μg/l. for fathead minnows. These authors also cited work by Biesinger that chloramine levels of approximately 1 μg/l. were lethal to Daphnia magna in 3-5 days. The long-term results from both of these studies are substantially in agreement. From field surveys Tsai (1973) suggested that 50% and 25% reductions in fish diversity could occur at total chlorine concentrations of 0.1 and 0.025 mg/l., respectively. Therefore, protection of aquatic life requires the reduction of chlorine residuals to concentrations near the limit of detection.

Dechlorination of the chlorinated effluent with sulfur dioxide provided protection to the aquatic species tested. Short-term mortality in the

highest dechlorinated concentration (100%) was always less than 50% for the 13 species tested. Similarly, no long-term effects were noted on the three species tested in the highest dechlorinated concentration (20%), except those ascribed to failure of the dechlorinator. Residual sulfite concentrations ranged from <20 to 700 μg/l. (as SO_2) in this chronic test dilution. In addition, no fathead minnows died in the 7-day tests when chlorination of the effluent to very high levels was followed by neutralization with sulfur dioxide.

Other studies have also shown that chlorinated effluents are more toxic than effluents that have been dechlorinated after chlorination. Onsite tests by Zillich (1972) at two Michigan wastewater plants showed that thiosulfate dechlorination effectively removed the toxicity from chlorination. As we found in our study, he also found that dechlorinator failure resulted in acute chlorine toxicity. Esvelt et al. (1973) have shown that dechlorination of San Francisco wastewater with bisulfite also removed the toxicity from chlorination. Collins and Deaner (1973) have advocated sulfur dioxide as an inexpensive and effective means for neutralizing chlorinated effluent toxicity.

Acute toxicity was observed when the effluent was purposely dosed with elevated amounts of sulfur dioxide. The 7-day TL50 values for amphipods and fathead minnows ranged from 10 to 60 mg/l. (as sulfite). At these lethal levels the dissolved oxygen concentrations and pH were suppressed. A principal disadvantage of sulfite dechlorination is the need to balance dosages carefully to prevent toxic excesses of either chlorine or sulfite.

Municipal wastewater toxicity is not limited to chlorine. Esvelt et al. (1973) have attributed the toxicity of municipal wastewaters to MBAS and ammonia nitrogen (NH_3-N) as well as to chlorination. Using an effluent from an oxidation pond receiving primary effluent, they found

that all fish survived 96-hr tests when the concentration of NH_3-N averaged 6.0 mg/l. and the MBAS concentration was 2.0 mg/l. Fifty per cent of the fish died when NH_3-N and MBAS concentrations reached 19.4 and 4.8 mg/l., respectively.

Ammonia nitrogen concentrations in our effluent from the storage tanks averaged 6.9 mg/l. Fish deaths in some of the acute nondisinfected tests were ascribed to low dissolved oxygen levels, but concentrations of MBAS were not measured.

Dunstan and Menzel (1971) reported that secondary-treated sewage provided an excellent source for continuously culturing and maintaining marine phytoplankton. Reproductive responses in the nondisinfected effluent by both fish and invertebrates were generally similar to that of the controls. This sewage source neither stimulated nor suppressed their survival and fecundity.

No measurable toxicity to aquatic life was found from either short- or long-term exposure to the ozonated effluent. Acute toxicity was only demonstrable when special procedures were used to shorten the retention time so that residual ozone could be maintained in the effluent continuously. With these procedures residual ozone concentrations of 0.2-0.3 mg/l. were lethal to fathead minnows after 1-3 hours' exposure. By comparison, 0.19-0.34 mg/l. of residual chlorine was lethal to fathead minnows after 12 hours' exposure. Although the toxicity magnitude for these two disinfectants appeared to be alike, residual ozone had the advantage of rapid dissipation from the effluent.

Little has been published on the toxicity of ozone to aquatic life, particularly in wastewaters. MacLean _et al_. (1973) reported effects of ozonated seawater on oyster eggs. They found that fertilization

occurred less readily, parthenogenesis was increased, and large numbers of cleaving eggs had abnormal nuclei. In an early study Hubbs (1930) concluded that the effects of ozone were cumulative and that concentrations as low as 0.03 mg/l. were possibly lethal to minnows. In our study lethal concentrations of ozonated effluent to fathead minnows were at residuals approximately ten times higher than the concentrations reported by Hubbs. Nightingale (1931) and Nebel _et al_. (1973) have reported much higher fish survival in ozonated than in nondisinfected effluents. Insufficient information is available at the present time for suggesting criteria to protect aquatic life in natural water reaches immediately adjacent to ozonation facilities.

Recommended criteria for chlorine have been proposed by Brungs (1973). He concluded that for wastes treated continuously with chlorine the more resistant organisms would be protected at residual chlorine concentrations not exceeding 0.01 mg/l. and that concentrations not exceeding 0.002 mg/l. would protect most aquatic life. Collins and Deaner (1973) stated that dechlorination equipment should provide chlorine concentrations in the final effluent of 0.1 mg/l. or less in accordance with recent California requirements. Our results indicate that continuous neutralization of the residual chlorine is necessary to prevent harmful effects on sensitive organisms in the receiving water.

SECTION VIII

REFERENCES

American Public Health Association. 1971. Standard methods for the examination of water and wastewater. 13th ed. Washington, D.C. 874 p.

Andrew, R. W. and G. E. Glass. 1974. Amperometric titration methods for total residual chlorine, ozone, and sulfite. Draft Report, National Water Quality Laboratory, Duluth.

Arthur, J. W. and J. G. Eaton. 1971. Chloramine toxicity to the amphipod Gammarus pseudolimnaeus and the fathead minnow (Pimephales promelas). J. Fish. Res. Bd. Canada 28:1841-1845.

Becker, C. D. and T. O. Thatcher. 1973. Toxicity of power plant chemicals to aquatic life. For U.S. Atomic Energy Commission by Battelle, Pacific Northwest Laboratories, Richland, WA, WASH-1249, UC-11.

Benoit, R. F. and N. A. Matlin. 1966. Control of Saprolegnia on eggs of rainbow trout (Salmo gairdneri) with ozone. Trans. Amer. Fish. Soc. 95:430-432.

Biesinger, K. E. and G. M. Christensen. 1972. Effects of various metals on survival, growth, reproduction, and metabolism of Daphnia magna. J. Fish. Res. Bd. Canada 29:1691-1700.

Brungs, W. A. 1973. Effects of residual chlorine on aquatic life. J. Water Pollut. Control Fed. 45:2180-2193.

Brungs, W. A. and D. I. Mount. 1970. A water delivery system for small fish-holding tanks. Trans. Amer. Fish. Soc. 99:799-802.

Collins, H. F. and D. G. Deaner. 1973. Sewage chlorination versus toxicity - A dilemma? J. Environ. Eng. Div., ASCE 99:761-772.

Dixon, W. J. (editor). 1971. Biomedical computer programs. Univ. California Publications in Automatic Computation, Univ. California Press, Berkeley. 600 p.

Dunnett, C. W. 1955. A multiple comparison procedure for comparing several treatments with a control. J. Amer. Stat. Assoc. 50:1096-1121.

Dunstan, W. M. and D. W. Menzel. 1971. Continuous cultures of natural populations of phytoplankton in dilute, treated sewage effluent. Limnol. Oceanogr. 16:623-632.

Esvelt, L. A., W. J. Kaufman, and R. E. Selleck. 1973. Toxicity assessment of treated municipal wastewaters. J. Water Pollut. Control Fed. 45:1558-1572.

Hubbs, C. L. 1930. The high toxicity of nascent oxygen. Physiol. Zool. 3:441-460.

Institute of Maritime Fisheries. 1972. Use of ozone in sea water for cleansing shellfish. Effluent and Water Treat. J. 12:260-262.

Kelly, C. B., W. Arcisz, and M. W. Presnell. 1960. Bacterial accumulation by the oyster Crassostrea virginica, on the gulf coast. U.S. Dep. Health, Education, and Welfare, Public Health Service, Robert A. Taft Sanitary Engineering Center Tech. Rep. F60-4. 26 p.

MacLean, S. A., A. C. Longwell, and W. J. Blogoslawski. 1973. Effects of ozone-treated seawater on the spawned, fertilized, meiotic, and cleaving eggs of the commercial American oyster. Mutation Res. 21:283-285.

Michigan Department of Natural Resources. 1971. Chlorinated municipal waste toxicities to rainbow trout and fathead minnows. U. S. Environmental Protection Agency, Washington, D.C. Water Pollut. Control Res. Ser., EPA-18050GZZ10/71, October 1971. 49 p.

Mount, D. I. and W. A. Brungs. 1967. A simplified dosing apparatus for fish toxicology studies. Water Res. 1:21-29.

National Water Quality Laboratory. 1971. Recommended bioassay procedure for fathead minnow Pimephales promelas Rafinesque chronic tests. In C. I. Weber (editor), Biological field and laboratory methods for measuring the quality of surface waters and effluents. U.S. Environmental Protection Agency, Cincinnati. Env. Monitor. Ser., EPA-670/4-73-001, July, 1973.

Nebel, C., R. D. Gottschling, R. L. Hutchinson, R. L. McBride, D. M. Taylor, J. L. Pavoni, M. E. Tittlebaum, H. E. Spencer, and M. Fleischman. 1973. Ozone disinfection of industrial - municipal secondary effluents. J. Water Pollut. Control Fed. 12:2493-2507.

Nightingale, H. W. 1931. Ozone treatment of waste sulphite liquor with reference to the effects upon cutthroat trout, chinook salmon, and oysters. Pacific Pulp Paper Ind. 5:23-28.

Perkin-Elmer Corporation. 1971. Analytical methods for atomic absorption spectrophotometry. Norwalk, CT.

Seligson, D. and H. Seligson. 1951. A microdiffusion method for the determination of nitrogren liberated as ammonia. J. Lab. Clin. Med. 38:324-330.

Shuval, A. I., J. Cohen, and R. Kalodney. 1973. Regrowth of coliforms and fecal coliforms in chlorinated wastewater effluent. Water Res. 7: 537-546.

Sliter, J. T. 1974. Ozone: An alternative to chlorine? J. Water Pollut. Control Fed. 46:4-6.

Tsai, C. 1973. Water quality and fish life below sewage outfalls. Trans. Amer. Fish. Soc. 102:281-292.

U.S. Environmental Protection Agency. 1973. Secondary treatment information, notice of proposed rulemaking. Federal Register 38:10642-10643.

Zillich, J. A. 1972. Toxicity of combined chlorine residuals to freshwater fish. J. Water Pollut. Control Fed. 44:212-220.

SECTION IX

APPENDICES

		Page
1.	Chemical Characteristics of Test-Chamber Waters During the Fathead Minnow Chronic Test	54
2.	Chemical Characteristics of Test-Chamber Waters During the Amphipod Chronic Test	55
3.	Total Residual Chlorine Concentrations in Test Chambers During Fathead Minnow, Amphipod, and Daphnid Chronic Exposures	56
4.	Total Sulfite Concentrations in Test Chambers During Fathead Minnow and Amphipod Chronic Exposures	57
5.	Number of Surviving Fathead Minnows after 10, 25, and 43 Weeks' Continuous Exposure to Nondisinfected and Disinfected Sewage Effluent	58
6.	Survival and Growth of Second Generation Fathead Minnow Larvae after 30 Days' Continuous Exposure to Nondisinfected and Disinfected Sewage Effluent	59

7. Number of Surviving Amphipods after 4, 10, 16, and 20 Weeks' Continuous Exposure to Nondisinfected and Disinfected Sewage Effluent 60

8. Survival and Growth of Second Generation Amphipods after 30 Days' Continuous Exposure to Nondisinfected and Disinfected Sewage Effluent 61

Appendix Table 1. CHEMICAL CHARACTERISTICS OF TEST-CHAMBER WATERS DURING THE FATHEAD MINNOW CHRONIC TEST

Nominal percentage sewage concentration	Nondisinfected			Dechlorinated			Chlorinated[a]			Ozonated		
	Mean	N	Range	Mean	N	Range	Mean	N	Range	Mean	N	Range
						pH[b]						
20	7.32	12	7.15–7.46	7.18	12	7.00–7.30	7.40	12	7.16–7.60	7.16	12	6.83–7.50
10	7.45	12	7.20–7.63	7.34	12	7.05–7.55	7.51	12	7.29–7.74	7.26	12	6.95–7.50
5	7.56	12	7.31–7.70	7.47	12	7.15–7.60	7.59	12	7.35–7.78	7.38	12	7.06–7.62
2.5	7.61	12	7.30–7.86	7.57	13	7.15–7.80	7.61	13	7.19–7.83	7.41	13	7.04–7.68
1.2	7.64	12	7.35–7.88	7.66	12	7.49–7.85	7.67	12	7.50–7.85	7.43	12	7.05–7.64
0 (Control)	7.66	12	7.46–7.92	7.69	12	7.50–7.86	7.68	12	7.46–7.84	7.46	12	7.15–7.75
						Dissolved oxygen (mg/l.)						
20	5.1	74	2.5–7.4	5.3	69	3.0–7.4	6.6	68	4.9–8.1	5.5	67	2.9–7.5
10	6.2	58	3.9–7.6	6.0	65	2.9–7.9	6.9	64	4.8–8.0	6.5	63	4.1–8.1
5	6.4	68	4.7–7.8	6.6	59	4.3–7.9	7.0	66	6.1–8.0	6.9	60	4.9–8.6
2.5	6.8	62	4.8–7.7	7.1	55	6.4–7.9	7.2	61	6.6–8.2	7.0	61	5.3–8.6
1.2	7.0	60	5.8–8.0	7.1	59	6.0–8.2	7.2	64	6.4–8.1	7.0	61	5.7–8.5
0 (Control)	6.8	62	4.6–8.0	7.2	64	5.9–8.2	7.2	62	5.3–8.0	6.9	64	5.7–8.5
						Total hardness (as $CaCO_3$, mg/l.)						
20	60.8	11	54.0–70.0	59.8	11	53.0–66.0	59.9	11	53.0–66.0	60.1	11	53.0–72.0
10	54.7	11	47.0–64.0	55.7	11	52.0–70.0	53.4	11	48.0–60.0	53.5	11	49.0–57.0
5	51.4	12	48.0–56.0	51.8	12	47.0–58.0	52.1	12	48.0–56.0	52.8	12	48.0–57.0
2.5	50.0	11	49.0–51.0	49.8	12	45.0–54.0	50.3	12	48.5–52.0	50.0	12	47.0–53.0
1.2	51.3	11	47.0–60.0	50.6	11	47.0–55.0	51.2	11	47.0–55.0	51.6	10	47.0–60.0
0 (Control)	49.3	11	47.0–50.0	48.3	11	46.0–51.0	49.0	11	45.0–53.0	49.8	11	46.0–57.0
						Total alkalinity (as $CaCO_3$, mg/l.)						
20	53.4	12	50.0–63.0	50.9	13	44.0–61.0	52.6	12	47.0–62.0	52.8	12	44.0–63.0
10	50.0	12	46.0–54.0	47.9	12	45.0–53.0	49.0	12	46.0–59.0	48.6	12	45.0–58.0
5	47.3	12	44.0–55.0	46.8	12	43.0–51.0	46.3	12	42.0–53.0	46.4	12	44.0–51.0
2.5	45.5	11	43.0–52.0	45.2	11	43.0–50.0	45.6	12	43.0–50.0	45.4	12	41.0–53.0
1.2	44.9	11	41.0–50.0	45.5	11	42.0–51.0	44.7	11	40.0–50.0	45.4	11	42.0–50.0
0 (Control)	46.1	11	41.0–50.0	45.7	11	42.0–50.0	46.0	11	42.0–50.0	46.5	11	44.0–53.0
						Acidity (mg/l.)						
20	5.6	12	3.9–11.8	7.2	12	5.0–14.0	5.3	12	3.1–9.9	6.2	12	4.2–10.9
10	4.2	12	2.8–5.9	4.9	12	3.5–7.4	4.0	12	2.8–5.0	4.8	12	3.7–6.9
5	3.9	12	2.5–9.9	4.1	12	2.8–9.9	3.5	12	2.5–8.8	4.0	12	2.5–9.9
2.5	3.1	11	1.9–5.0	3.1	12	2.3–5.9	3.0	12	1.9–5.0	3.7	12	2.3–6.4
1.2	2.9	11	2.3–5.0	2.8	11	2.3–4.0	2.9	11	2.3–4.0	3.5	11	2.5–6.4
0 (Control)	3.1	11	2.0–6.1	2.9	11	2.0–5.6	2.9	10	2.0–5.0	3.3	11	2.0–5.9

[a]Nominal percentage sewage concentrations were 10, 5, 2.5, 1.2, 0.6, and 0, respectively.

[b]Median values.

Appendix Table 2. CHEMICAL CHARACTERISTICS OF TEST-CHAMBER WATERS DURING THE AMPHIPOD CHRONIC TEST

Nominal percentage sewage concentration	Nondisinfected			Dechlorinated			Chlorinated[a]			Ozonated		
	Mean	N	Range	Mean	N	Range	Mean	N	Range	Mean	N	Range
						pH[b]						
20	7.30	5	7.11-7.45	7.19	4	7.09-7.38	7.43	4	7.32-7.58	7.31	4	7.24-7.46
10	7.47	6	7.35-7.72	7.39	6	7.34-7.63	7.52	6	7.45-7.63	7.36	6	7.22-7.54
5	7.53	4	7.44-7.80	7.67	4	7.62-7.79	7.44	4	7.63-7.94	7.57	4	7.50-7.68
2.5	7.63	7	7.45-7.78	7.62	7	7.52-7.83	7.60	7	7.29-7.74	7.60	7	7.40-7.82
1.2	7.70	5	7.44-7.82	7.69	5	7.53-7.85	7.70	5	7.54-7.85	7.58	5	7.48-7.67
0 (Control)	7.69	7	7.53-7.82	7.70	7	7.50-7.83	7.67	7	7.52-7.83	7.50	7	6.98-7.86
						Dissolved oxygen (mg/l.)						
20	6.8	40	4.8-9.1	7.4	41	6.0-8.9	8.6	43	7.7-9.7	7.8	42	6.2-9.6
10	8.3	41	7.3-9.8	8.6	37	6.9-9.8	8.8	38	8.3-9.8	8.6	42	7.6-9.7
5	8.7	34	7.8-9.9	8.9	36	7.1-10.2	9.0	40	8.5-9.9	8.7	36	7.9-9.8
2.5	8.7	39	7.4-9.9	9.1	37	8.3-10.2	9.1	36	8.4-10.0	8.8	31	8.2-9.4
1.2	8.9	37	8.0-10.2	9.2	39	8.5-10.6	9.0	36	8.4-10.0	8.9	33	8.2-9.8
0 (Control)	9.0	41	8.3-10.2	9.3	40	8.5-10.4	9.2	42	8.5-10.0	9.0	41	8.1-9.9
						Total hardness (as $CaCO_3$, mg/l.)						
20	62.3	4	59.0-67.0	63.3	4	58.0-67.0	57.0	4	55.0-60.0	63.5	4	57.0-70.0
10	59.0	5	54.0-68.0	59.0	5	51.0-72.0	54.8	5	50.0-58.0	60.2	5	52.0-80.0
5	52.2	5	50.0-54.0	53.2	5	49.0-55.0	52.4	5	48.0-56.0	53.2	5	53.0-55.0
2.5	50.5	7	45.0-54.0	50.1	7	49.0-51.0	50.4	7	48.0-55.0	52.1	7	49.0-55.0
1.2	51.8	5	50.0-55.0	51.2	5	49.0-55.0	51.8	5	49.0-54.0	53.2	5	50.0-58.0
0 (Control)	50.7	7	45.0-60.0	52.1	7	47.0-65.0	53.0	7	46.0-68.0	53.7	7	49.0-65.0
						Total alkalinity (as $CaCO_3$, mg/l.)						
20	57.8	5	53.0-70.0	50.8	5	43.0-60.0	50.0	5	48.0-55.0	57.1	5	50.0-67.0
10	49.7	6	45.0-55.0	47.2	6	44.0-50.0	47.1	6	45.0-50.0	50.3	6	45.0-60.0
5	46.4	5	45.0-50.0	47.0	5	44.0-53.0	45.8	5	44.0-48.0	48.4	5	43.0-55.0
2.5	45.1	7	43.0-48.0	43.4	7	43.0-50.0	45.4	7	42.0-52.0	45.8	7	43.5-50.0
1.2	44.8	5	42.0-47.0	45.6	5	43.0-47.0	46.8	5	45.0-49.0	47.6	5	43.0-51.0
0	44.9	7	42.0-49.0	44.1	7	42.0-47.0	44.8	7	41.0-47.0	44.4	7	41.0-47.0
						Acidity (mg/l.)						
20	6.1	5	5.2-7.3	6.7	5	5.0-8.5	4.2	5	3.3-5.0	5.6	6	4.4-7.5
10	3.8	6	3.0-4.0	4.5	6	4.0-5.4	3.2	6	2.8-4.0	4.4	6	3.0-6.1
5	2.8	5	2.5-3.3	2.9	5	2.3-4.2	2.8	5	2.5-2.8	3.1	5	3.0-3.3
2.5	2.7	7	2.0-3.3	2.8	7	2.0-4.2	2.4	7	1.5-2.8	2.7	7	1.7-3.6
1.2	2.5	5	2.3-3.0	2.8	5	2.3-3.9	2.6	5	2.5-3.5	2.7	5	2.3-3.3
0 (Control)	2.9	7	2.0-5.1	2.6	7	2.1-4.0	2.7	7	2.3-3.9	3.5	7	2.3-7.0

[a]Nominal percentage sewage concentrations were 10, 5, 2.5, 1.2, 0.6, and 0, respectively.

[b]Median values.

Appendix Table 3. TOTAL RESIDUAL CHLORINE CONCENTRATIONS IN TEST CHAMBERS DURING FATHEAD MINNOW, AMPHIPOD, AND DAPHNID CHRONIC EXPOSURES (micrograms/liter)

Nominal percentage sewage concentration		Fathead minnow test								Daphnid test			
		Mean	N	Range	Mean of pairs	Mean	N	Range	Mean of pairs	Mean	N	Range	Mean of pairs
		Adult tanks				Progeny tanks				Test 1			
10	A	98 ± 52[a]	170	nm[b] - 248	110	183 ± 85	38	nm - 420	198	92 ± 29	7	60 - 127	114
	B	123 ± 58	116	nm - 340		212 ± 83	40	32 - 420		136 ± 21	6	106 - 159	
5	A	45 ± 24	109	nm - 160	42	96 ± 47	37	nm - 160	88	45 ± 19	5	29 - 71	50
	B	40 ± 21	80	nm - 90		79 ± 42	38	nm - 170		55 ± 10	5	42 - 69	
2.5	A	17 ± 12	105	nm - 57	14	18 ± 19	39	nm - 96	21	15 ± 11	5	nm - 25	14
	B	11 ± 9	74	nm - 42		23 ± 23	38	nm - 99		14 ± 5	5	7 - 21	
1.2	A	8 ± 10	100	nm - 35	6	6 ± 5	35	nm - 17	6	5 ± 3	6	nm - 8	4
	B	5 ± 6	76	nm - 42		6 ± 16	36	nm - 99		3 ± 3	6	nm - 8	
0.6	A	4 ± 8	96	nm - 39	3	1 ± 2	34	nm - 7	1	2 ± 2	5	nm - 4	2
	B	2 ± 5	71	nm - 35		1 ± 2	30	nm - 6		3 ± 4	5	nm - 7	
0 (Control)	A	nm				nm				nm			
	B	nm				nm				nm			
		Amphipod test								Test 2			
10	A	117 ± 38	52	40 - 262	123	123 ± 19	6	106 - 141	135	133 ± 99	5	57 - 303	136
	B	129 ± 41	47	10 - 205		147 ± 9	5	142 - 163		140 ± 35	6	81 - 177	
5	A	50 ± 18	46	14 - 106	54	59 ± 17	6	35 - 81	65	38 ± 17	5	19 - 64	38
	B	58 ± 15	41	27 - 89		71 ± 0	5	71		37 ± 20	6	11 - 64	
2.5	A	20 ± 11	42	nm - 53	19	18 ± 9	8	7 - 35	17	3 ± 4	8	nm - 12	7
	B	18 ± 11	38	nm - 40		15 ± 4	6	11 - 21		11 ± 11	11	nm - 39	
1.2	A	12 ± 11	36	nm - 50	12	3 ± 4	7	nm - 11	4	2 ± 2	8	nm - 5	2
	B	12 ± 9	33	nm - 40		4 ± 2	9	nm - 7		2 ± 3	6	nm - 7	
0.6	A	8 ± 9	34	nm - 35	8	2 ± 3	10	nm - 7	2	nm ± 1	5	nm - 2	nm
	B	7 ± 9	33	nm - 40		1 ± 2	14	nm - 6		nm ± 1	6	nm - 2	
0 (Control)	A	nm				nm				nm			
	B	nm				nm				nm			

[a]Mean ± 1 standard deviation.

[b]Not measurable, less than 1 μg/l.

Appendix Table 4. TOTAL SULFITE CONCENTRATIONS IN TEST CHAMBERS DURING FATHEAD MINNOW AND AMPHIPOD CHRONIC EXPOSURES
(micrograms/liter)

Nominal percentage sewage concentration	Fathead minnow test			Amphipod test		
	Mean	N	Range	Mean	N	Range
20	104 ± 165[a]	53	nm[b] - 700	172 ± 163	10	nm - 400
10	95 ± 146	48	nm - 600	123 ± 51	6	60 - 200
5	35 ± 61	39	nm - 300	40 ± 36	6	nm - 80
2.5	nm	32	nm - 200	nm	4	nm - 20
1.2	nm	32	nm - 60	nm	4	nm
0 (Control)	nm	33	nm	nm	4	nm

[a]Mean ± 1 standard deviation.

[b]Not measurable, less than 20 μg/l.

Appendix Table 5. NUMBER OF SURVIVING FATHEAD MINNOWS AFTER 10, 25, AND 43 WEEKS' CONTINUOUS EXPOSURE TO NONDISINFECTED AND DISINFECTED SEWAGE EFFLUENT

Nominal percentage sewage concentration		10[a] weeks	25[b] weeks	43 weeks	Nominal percentage sewage concentration		10[a] weeks	25[b] weeks	43 weeks
		Nondisinfected					Dechlorinated		
20	A	35	15	11	20	A	24	13	9
	B	29	12	10		B	23	12	12
10	A	26	11	5	10	A	24	15	14
	B	27	15	9		B	25	13	10
5	A	28	15	10	5	A	20	13	11
	B	31	11	10		B	25	15	12
2.5	A	27	14	9	2.5	A	23	13	10
	B	23	11	9		B	26	13	10
1.2	A	23	11	8	1.2	A	27	14	10
	B	28	14	13		B	28	13	5
0 (Control)	A	27	11	8	0 (Control)	A	26	11	9
	B	29	11	10		B	25	13	11
		Chlorinated[c]					Ozonated		
10	A	8	2	2	20	A	36	15	10
	B	1	1	1		B	30	15	10
5	A	5	5	5	10	A	30	12	9
	B	4	4	5		B	23	15	10
2.5	A	20	13	10	5	A	23	15	14
	B	19	15	9		B	32	13	9
1.2	A	15	14	13	2.5	A	30	14	13
	B	12	10	9		B	23	14	13
0.6	A	13	13	9	1.2	A	26	14	9
	B	20	14	11		B	20	15	12
0 (Control)	A	18	11	7	0 (Control)	A	31	13	10
	B	24	15	13		B	31	12	5

[a]Each test chamber (N = 35) thinned to 15 fathead minnows after 60 days.

[b]Excess males removed during the spawning period.

[c]Respective total residual chlorine levels (in µg/l.) were 110, 42, 14, 6, 3, and nonmeasurable.

Appendix Table 6. SURVIVAL AND GROWTH OF SECOND GENERATION FATHEAD MINNOW LARVAE AFTER 30 DAYS' CONTINUOUS EXPOSURE TO NONDISINFECTED AND DISINFECTED SEWAGE EFFLUENT

Nominal percentage sewage concentration		Final percentage surviving: Test trials 1	2	3	Mean percentage surviving	Final mean weight (g)
		Nondisinfected				
20	A	87.5	100.0	—[a]	65.0	0.05
	B	7.5	—	—		
10	A	95.0	—	—	72.5	0.07
	B	50.0	—	—		
5	A	80.0	97.5	—	88.1	0.03
	B	90.0	85.0	—		
2.5	A	70.0	90.0	45.0	64.4	0.04
	B	52.5	—	—		
1.2	A	87.5	72.5	—	68.1	0.05
	B	72.5	40.0	—		
0 (Control)	A	82.5	40.0	12.5	50.5	0.05
	B	42.5	75.0	—		
		Chlorinated[b]				
10	A	—	—	—	0.0	—
	B	—	—	—[c]		
5	A	5.0	0.0	0.0	1.2	0.02
	B	0.0	—	—		
25	A	47.5	27.5	—	24.0	0.05
	B	15.0	2.5	27.5		
1.2	A	92.5	—	—	76.9	0.05
	B	42.5	80.0	92.5		
0.6	A	90.0	97.5	—	80.0	0.05
	B	75.0	57.5	—		
0 (Control)	A	85.0	22.5	55.0	52.0	0.04
	B	42.5	55.0	—		

Nominal percentage sewage concentration		Final percentage surviving: Test trials 1	2	3	Mean percentage surviving	Final mean weight (g)
		Dechlorinated				
20	A	87.5	85.0	—	85.0	0.05
	B	82.5	—	—		
10	A	45.0	97.5	—	64.4	0.09
	B	55.0	60.0	—		
5	A	25.0	—	—	58.3	0.07
	B	60.0	90.0	—		
2.5	A	45.0	95.0	—	68.5	0.06
	B	47.5	80.0	75.0		
1.2	A	90.0	95.0	—	88.3	0.04
	B	84.0	—	—		
0 (Control)	A	52.5	37.5	—	55.0	0.06
	B	45.0	97.5	42.5		
		Ozonated				
20	A	95.0	95.0	90.0	90.0	0.05
	B	87.5	[illegible]	—		
10	A	77.5	65.0	—	78.8	0.06
	B	77.5	95.0	—		
5	A	92.5	47.5	—	55.0	0.05
	B	70.0	10.0	—		
2.5	A	67.5	80.0	—	64.2	0.06
	B	45.0	—	—		
1.2	A	35.0	100.0	—	73.1	0.04
	B	62.5	95.0	—		
0 (Control)	A	60.0	80.0	10.0	49.2	0.04
	B	45.0	55.0	45.0		

[a]Test trial was not conducted.

[b]Mean total residual chlorine levels for the six test concentrations (in µg/l.) were 198, 88, 21, 6, 1, and nonmeasurable, respectively.

[c]Larvae were taken from control tanks.

Appendix Table 7. NUMBER OF SURVIVING AMPHIPODS AFTER 4, 10, 16, and 20 WEEKS' CONTINUOUS EXPOSURE TO NONDISINFECTED AND DISINFECTED SEWAGE EFFLUENT

Nominal percentage sewage concentration		4 weeks	10[a] weeks	16 weeks	20 weeks
Nondisinfected					
20	A	25	22	12	10
	B	20	15	15	15
10	A	22	20	14	10
	B	29	29	15	15
5	A	20	21	13	12
	B	23	19	14	15
2.5	A	19	19	14	12
	B	30	28	10	10
1.2	A	15	19	13	14
	B	23	18	10	11
0 (Control)	A	24	21	11	12
	B	27	32	11	11
Chlorinated[b]					
10	A	21	9	0	0
	B	24	10	1	0
5	A	29	20	6	5
	B	25	19	6	5
2.5	A	21	23	11	11
	B	27	25	10	10
1.2	A	22	19	10	9
	B	25	25	14	16
0.6	A	28	20	12	11
	B	19	13	15	14
0 (Control)	A	24	22	10	12
	B	25	21	15	13

Nominal percentage sewage concentration		4 weeks	10[a] weeks	16 weeks	20 weeks
Dechlorinated					
20	A	10	11	7	7
	B	14	14	1	0
10	A	17	21	12	12
	B	19	21	12	11
5	A	28	21	12	11
	B	23	20	11	9
2.5	A	27	29	14	15
	B	16	14	15	17
1.2	A	27	26	13	12
	B	24	23	14	14
0 (Control)	A	22	20	13	14
	B	28	25	13	13
Ozonated					
20	A	18	18	13	12
	B	16	18	14	13
10	A	30	28	10	8
	B	21	19	9	11
5	A	23	17	13	11
	B	16	16	10	12
2.5	A	31	21	14	13
	B	25	24	12	12
1.2	A	21	20	15	14
	B	17	13	12	10
0 (Control)	A	16	22	13	12
	B	22	21	14	13

[a]Each test chamber (N = 35) thinned to 15 amphipods after 60 days.

[b]Respective total residual chlorine levels (in μg/l.) were 123, 54, 19, 12, 8, and nonmeasurable.

Appendix Table 8. SURVIVAL AND GROWTH OF SECOND GENERATION AMPHIPODS AFTER 30 DAYS' CONTINUOUS EXPOSURE TO NONDISINFECTED AND DISINFECTED SEWAGE EFFLUENT

Nominal percentage sewage concentration		Nondisinfected		Dechlorinated		Ozonated		Nominal percentage sewage concentration		Chlorinated[a]	
		Percentage survival	Average final head length (mm)	Percentage survival	Average final head length (mm)	Percentage survival	Average final head length (mm)			Percentage survival	Average final head length (mm)
20	A	90	0.6	88	0.7	65	0.8	10	A	88[b]	0.7
	B	100	0.6	66	0.6	85	0.8		B	82[b]	0.6
10	A	88	0.6	89	0.7	95	0.8	5	A	96[b]	0.8
	B	98	0.6	41	0.6	98	0.8		B	95[b]	0.7
5	A	58	0.5	97	0.7	86	0.8	2.5	A	50	0.7
	B	100	0.6	98	0.7	75	0.5		B	85	0.7
2.5	A	53	0.5	91	0.7	86	0.7	1.2	A	90	0.6
	B	94	0.6	90	0.7	75	0.7		B	92	0.7
1.2	A	93	0.7	90	0.7	67	0.6	0.6	A	86	0.6
	B	71	0.6	91	0.7	93	0.7		B	92	0.6
0 (Control)	A	70	0.6	89	0.6	37	0.6	0 (Control)	A	95	0.6
	B	—[c]	—	100	0.5	88	0.6		B	79	0.6

[a]Mean total residual chlorine levels for the six concentrations (in µg/l.) were 135, 65, 17, 4, 2, and nonmeasurable, respectively.

[b]Test animals taken from control tanks.

[c]Test not conducted.

TECHNICAL REPORT DATA
(Please read Instructions on the reverse before completing)

1. REPORT NO. EPA-600/3-75-012	2.	3. RECIPIENT'S ACCESSION NO.
4. TITLE AND SUBTITLE COMPARATIVE TOXICITY OF SEWAGE-EFFLUENT DISINFECTION TO FRESHWATER AQUATIC LIFE		5. REPORT DATE November 1975 (Issuing Date)
		6. PERFORMING ORGANIZATION CODE
7. AUTHOR(S) John W. Arthur, Robert W. Andrew, Vincent R. Mattson, Donald T. Olson, Gary E. Glass, Barbara J. Halligan, and Charles T. Walbridge		8. PERFORMING ORGANIZATION REPORT NO.
9. PERFORMING ORGANIZATION NAME AND ADDRESS Environmental Research Laboratory, Office of Research and Development, U.S. Environmental Protection Agency, Duluth, Minnesota 55804		10. PROGRAM ELEMENT NO. 1BA021; ROAP/Task 06AOJ/005
		11. CONTRACT/GRANT NO. None (in-house)
12. SPONSORING AGENCY NAME AND ADDRESS Same as above		13. TYPE OF REPORT AND PERIOD COVERED Final
		14. SPONSORING AGENCY CODE
15. SUPPLEMENTARY NOTES		

16. ABSTRACT Flow-through laboratory bioassays were conducted with a domestic secondary sewage effluent that had been disinfected by chlorination, by chlorination followed by dechlorination, and by ozonation. Effluent without disinfection served as a control. Disinfection with chlorine and ozone generally maintained the effluent at total coliform levels of less than 1,000 per 100 ml. Lake Superior water served as the diluent source for the experiments. Short-term (7-day) exposures were conducted with 13 species (seven fish and six invertebrates), and long-term (generation) tests were performed with three species (one fish and two invertebrates). In both series of tests the chlorinated effluent was lethal at appreciably lower concentrations than any of the other three effluent treatments. Fish were more sensitive than the invertebrates to the chlorinated effluent in 7-day tests. The respective 7-day TL50 values of total residual chlorine to fish and invertebrates ranged from 0.08 to 0.26 and 0.21 to >0.81 mg/l. Residual ozone rapidly decreased in the treated effluent and was not measurable in the test tanks. When special short-term test procedures and shorter retention times for the ozonated effluent were used, measured residual ozone was about as lethal to fathead minnows as residual chlorine. The highest mean total residual chlorine concentrations having no long-term adverse effect on fathead minnows, amphipods, and Daphnia were 14, 12, and 2-4 µg/l., respectively. No daphnids survived at approximately 10 µg/l. mean total residual chlorine, a concentration that corresponds to a chlorinated sewage concentration of about 2.5%.

17. KEY WORDS AND DOCUMENT ANALYSIS

a. DESCRIPTORS		b. IDENTIFIERS/OPEN ENDED TERMS	c. COSATI Field/Group
Disinfection	Fresh water fishes	Chlorine toxicity	6A
Chlorination	Dechlorination	Ozone toxicity	6C
Bioassay		Aquatic life	7B
Aquatic animals		Sewage effluent	7C
Ozone		Amphipoda	
Minnows			
Daphnia			

18. DISTRIBUTION STATEMENT RELEASE UNLIMITED	19. SECURITY CLASS (This Report) UNCLASSIFIED	21. NO. OF PAGES 71
	20. SECURITY CLASS (This page) UNCLASSIFIED	22. PRICE

EPA Form 2220-1 (9-73)

☆ U. S. GOVERNMENT PRINTING OFFICE: 1975-657-695/5339 Region No. 5-11