EPA-600/2-76-230
September 1976

Environmental Protection Technology Series

LEATHER TANNING AND FINISHING WASTE MANAGEMENT RESEARCH AND DEVELOPMENT PROGRAM

Industrial Environmental Research Laboratory
Office of Research and Development
U.S. Environmental Protection Agency
Cincinnati, Ohio 45268

RESEARCH REPORTING SERIES

Research reports of the Office of Research and Development, U.S. Environmental Protection Agency, have been grouped into five series. These five broad categories were established to facilitate further development and application of environmental technology. Elimination of traditional grouping was consciously planned to foster technology transfer and a maximum interface in related fields. The five series are:

1. Environmental Health Effects Research
2. Environmental Protection Technology
3. Ecological Research
4. Environmental Monitoring
5. Socioeconomic Environmental Studies

This report has been assigned to the ENVIRONMENTAL PROTECTION TECHNOLOGY series. This series describes research performed to develop and demonstrate instrumentation, equipment, and methodology to repair or prevent environmental degradation from point and non-point sources of pollution. This work provides the new or improved technology required for the control and treatment of pollution sources to meet environmental quality standards.

This document is available to the public through the National Technical Information Service, Springfield, Virginia 22161.

EPA-600/2-76-230
September 1976

LEATHER TANNING AND FINISHING WASTE MANAGEMENT RESEARCH AND DEVELOPMENT PROGRAM

By

James F. Scaief
Food and Wood Products Branch
IERL - Cincinnati
Corvallis Field Station
Corvallis, Oregon 97330

INDUSTRIAL ENVIRONMENTAL RESEARCH LABORATORY
OFFICE OF RESEARCH AND DEVELOPMENT
U.S. ENVIRONMENTAL PROTECTION AGENCY
CINCINNATI, OHIO 45268

DISCLAIMER

This report has been reviewed by the Industrial Environmental Research Laboratory-Cincinnati, U.S. Environmental Protection Agency, and approved for publication. Mention of trade names or commercial products does not constitute endorsement or recommendation for use.

FOREWORD

When energy and material resources are extracted, processed, converted, and used, the pollutional impact on our environment and even on our health often require that new and increasingly more efficient pollution control methods be used. The Industrial Environmental Research Laboratory - Cincinnati (IERL-CI) assists in developing and demonstrating new and improved methodologies that will meet these needs both efficiently and economically.

"Leather Tanning and Finishing Waste Management Research and Development Program" reviews waste management research and development activities for the leather tanning and finishing industry, emphasizing EPA's efforts. Other U.S. organizations involved are listed along with brief descriptions of their objectives. Research needs are also defined. For further information please contact the Food and Wood Products Branch of the Industrial Environmental Research Laboratory, Cincinnati.

David G. Stephan
Director
Industrial Environmental Research Laboratory
Cincinnati

ABSTRACT

Reviewed herein is the waste management research and development program for the leather tanning and finishing industry. Emphasis is placed on the Environmental Protection Agency's (EPA) role, both past and present, and major developments over the past few years outside EPA, including international developments. Furture waste management needs for the industry are defined and organizations involved in the field are presented with a brief description of their objectives.

TABLE OF CONTENTS

Section	Page
I. Summary and Conclusions	1
II. Introduction	3
III. Discharge Limitations	6
IV. Organizations Involved in Field of Waste Reduction	9
A. Governmental	
B. Non-Governmental	
V. Review of Recent Work within the Industry	12
A. EPA Projects	
B. Non-EPA Projects	
VI. On-going EPA Projects	30
VII. Future Areas of Concern	32
VIII. References	35

ACKNOWLEDGMENTS

Appreciation is given to the following individuals who reviewed this report and supplied many helpful comments.

W. L. Banks
EPA, Region VII

Donald F. Anderson
Effluent Guidelines Division-EPA

Dr. R. M. Lollar
Technical Director
Tanners' Council of America, Inc.

Eugene L. Kilik
Executive Vice-President
Tanners' Council of America, Inc.

Jack L. Witherow
EPA-Corvallis, OR

James R. Boydston
EPA-Corvallis, OR

SECTION I
SUMMARY AND CONCLUSIONS

The status of research on waste management in the leather tanning and finishing industry and review of recent literature, including both national and international developments, is presented. Areas covered consist of changes to recycle and reuse waste streams within the tannery processes, and methods of wastewater treatment.

EPA's waste research program in the tanning industry consists of three on-going extramural projects and four completed projects. Five of the seven projects deal with methods of waste treatment and the other two with in-plant methods of reducing the waste load.

Organizations involved in waste reduction practices dealing with the tanning industry are described. These consist of governmental as well as the trade associations.

The industry categorization and the associated discharge limitations and proposed pretreatment standards are presented from the Federal Register in order to show the present and future needs in wastewater mangement.

Much of the effort in wastewater management, due to increasing stringent regulations and surcharges for discharge to municipal treatment, should be directed toward reduction of the waste load emanating from the tannery. The results obtained from this type of effort will be beneficial not only to the tanner discharging to municipal treatment systems, but also to the one providing its own treatment. In-plant waste management is a necessary part of the scheme to produce a discharge to the receiving body of water that is capable of meeting the July 1, 1983 limitations. Changes in a particular plant will be controlled by the type of product and limited to those which maintain the desired product quality.

More effort is needed in this country toward direct reuse of chrome tanning solutions after regeneration as a viable alternative to either discharging to the treatment system or recovery of chromium by precipitation.

Other areas of reducing the waste load needing development are the recycle of lime-sulfide unhairing liquors, reducing the amount of lime used, utilizing alternatives to lime-sulfide unhairing and unhairing in the first soak liquor.

Demonstration of an overall wastewater management system, both in-plant and end of pipe treatment, for meeting the 1983 Best Available Technology Economically Achievable (BATEA) limits should be placed on a high priority by the organizations involved in development of wastewater treatment technology for the industry. The utilization of the oxidation ditch or equivalent, with its ability to consistently produce a low strength effluent, after primary treatment may be a key element in a system designed to meet BATEA limits.

Finally, due to the unknown effect that new synthetic tannins might have on biological waste treatment, the toxicity of such should be determined prior to use within the industry.

SECTION II
INTRODUCTION

The leather tanning and finishing industry, though not a major polluter nationwide, can contribute substantially to the wastewater problem in localized areas. The industry's wastewaters are characterized by the following parameters: 5-day biochemical oxygen demand (BOD_5), chemical oxygen demand (COD), total suspended solids (TSS), total Kjeldahl nitrogen (TKN), chromium, oil and grease (O&G), sulfide and pH. The beamhouse and tanhouse impart the major portion of the waste load. A flow diagram of a typical cattlehide tannery is shown in Figure 1 to show the sources of the wastewaters. The source of the nitrogen is mainly from the unhairing and bating steps. Sulfide and lime are from the unhairing process and chromium comes from the tanning process. Much of the research is directed toward removing or reducing the magnitude of these waste constituents in the waste stream. Efforts are toward recovering for later reuse or removing them from the waste stream along with research into methods to prevent certain tannery processes from contributing to the waste stream.

Tanning has developed as an art through the years based on the experience of individuals who have been associated with the industry. Many of the decisions within the tannery are based on the "feel of the process" by these individuals. Though this method produces excellent leather, it may not be the most desirable one from a waste standpoint. With the inception of the discharge limitations, the tanner is forced to have more scientific control over the processes in order to know what is entering the waste stream and in what quantity. This requires the change of some long used processes in addition to greater chemical control over the operations.

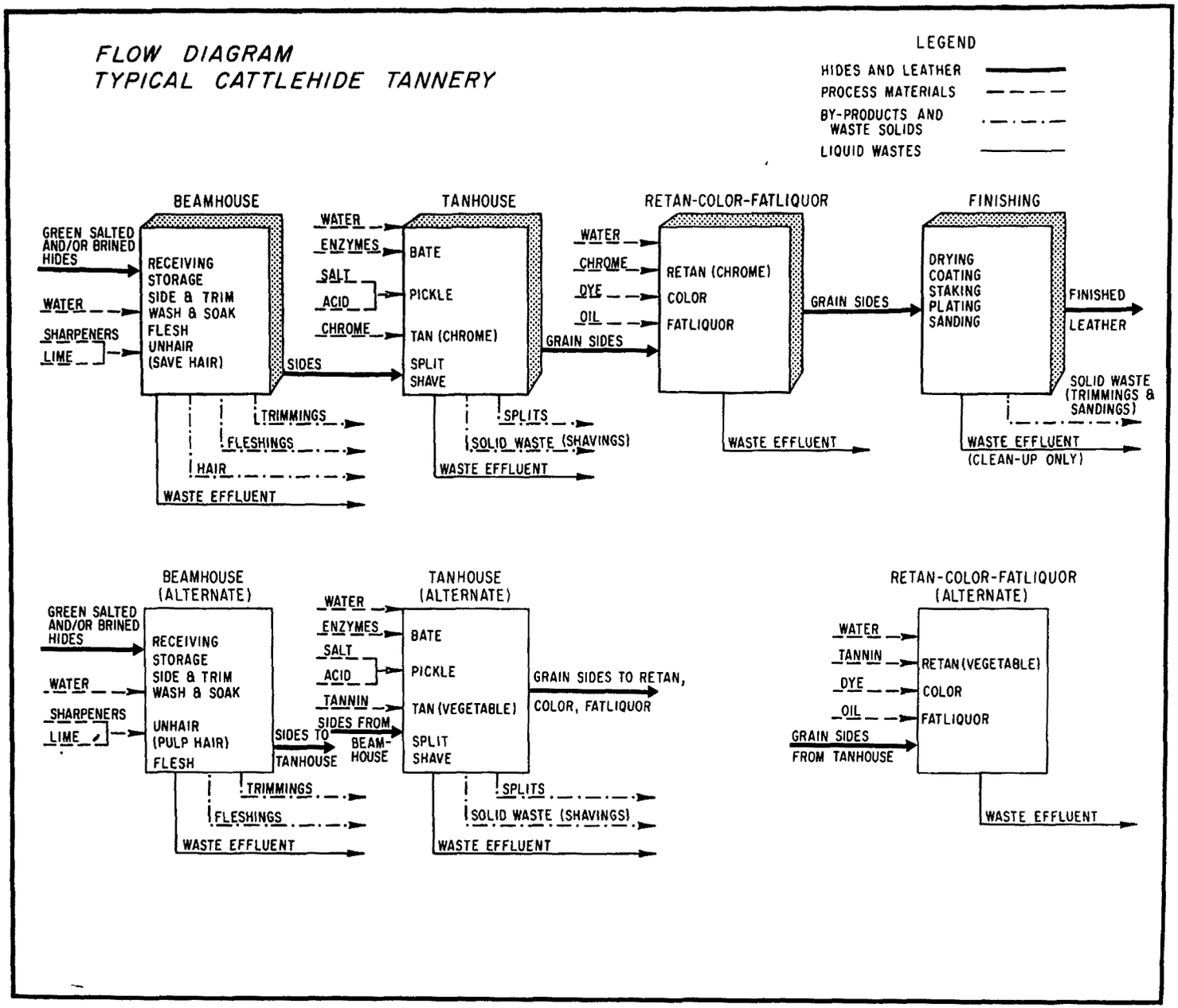

Figure 1. Flow diagram - cattlehide tannery(1)

The objectives of this report are to present the technology that has been recently demonstrated or that needs to be undertaken to meet the effluent limitations and to provide an initial guide to the literature and organizations involved with waste management in the leather tanning industry.

SECTION III
DISCHARGE LIMITATIONS

Under the Federal Water Pollution Control Act Amendments of 1972, EPA was given the authority to administer a new wastewater discharge permit system. The law sets the dates for compliance to the new limitations as July 1, 1977, for the application of the best practicable control technology currently available and July 1, 1983, for application of the best available control technology economically achievable. The 1977 limits are based on the average of the more exemplary plants within the industry. For the case of the leather tanning and finishing industry, the effluent limitations are based on reduction attainable by treatment systems in the meat industry where the technology can be effectively transferred to the leather tanning and finishing industry. The transfer of technology does not include the transfer of meat industry performance requirements. For the leather tanning and finishing industry the final limits allowed are about three times the final effluent BOD_5 concentrations used to establish the meat industry effluent limits. The 1983 limits are based on the best control and treatment of waste employed within the industry. A summary of the promulgated guidelines is shown in Table 1; Figure 2 further defines the six categories within the industry.

For tanneries discharging to municipal treatment systems, certain wastewater parameters have been determined compatible with biological treatment and require no pretreatment. Proposed pretreatment standards for incompatabile pollutants are outlined in the Federal Register (2) and are limited to chromium, and oil and grease. For these pollutants the 1977 effluent limitations guidelines as set forth for tanneries discharging to navigable waters shall apply.

Table 1. LEATHER TANNING & FINISHING EFFLUENT STANDARD
Federal Register, Vol. 39, No. 69, 4/9/74

Maximum for any 1 day (kg/1000 kg raw material)
Average of daily values for 30 consecutive days shall not exceed (1/2) max.

	Hair Pulp Unhairing with Chrome Tanning & Finishing		Hair Save Unhairing with Chrome Tanning & Finishing		Unhairing with Vegetable or Alum Tanning & Finishing		Finishing of Tanned Hides	
Parameter	1977	1983	1977	1983	1977	1983	1977	1983
BOD_5	8.0	2.8	9.2	3.2	7.6	2.6	3.2	1.0
TSS	10.0	3.0	11.6	3.6	9.6	2.8	4.0	1.2
Chromium (Total)	0.20	.1	.24	.12	.1	.1	.20	.04
O & G	1.50	1.06	1.80	1.26	1.50	1.0	.50	.48
Sulfide	--	.01	--	.012	--	.01	--	.004
TKN	--	.54	--	.64	--	.5	--	.2

	Vegetable or Chrome Tanning of Unhaired Hides		Unhairing with Chrome Tanning & No Finishing	
Parameter	1977	1983	1977	1983
BOD_5	9.6	3.2	5.6	1.4
TSS	12.0	3.6	6.8	1.6
Chromium (Total)	.12	.12	.20	.06
O & G	1.80	1.26	.70	.68
Sulfide	--	.012	--	.006
TKN	--	.62	--	.28

NOTE: pH limit for all subcategories is within the range of 6.0 -9.0
Fecal coliform limit (1983 only), max. at any time = 400 counts/100 ml.
New Source limit is same as for 1977 limits for corresponding subcategory.
For production <17,000 kg hide, BOD_5 and TSS limits are 1.5 x above limits.

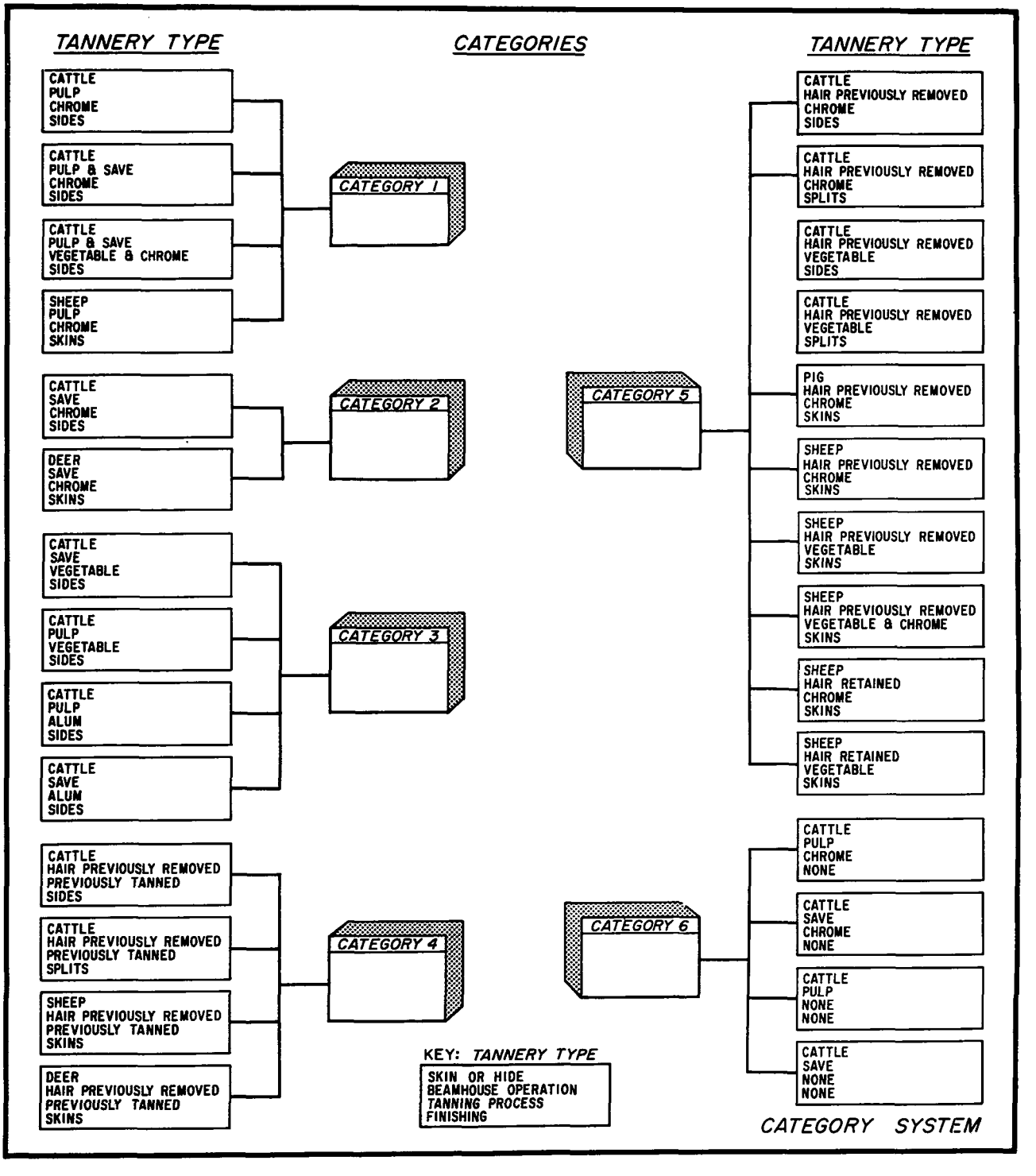

Figure 2. Leather tanning and finishing effluent limitation categories

SECTION IV
ORGANIZATIONS INVOLVED IN FIELD OF WASTE REDUCTION

To make available information regarding organizations actively involved in or supporting research in waste reduction in the leather tanning industry, following is a list of these groups with a short summary explaining their operations.

1. Food and Wood Products Branch
   IERL - Cincinnati
   Corvallis Field Station
   200 SW 35th Street
   Corvallis, Oregon 97330
   Kenneth A. Dostal, Chief-Food Wastes Research
   (503) 752-4211

This center is administering research projects to demonstrate new or novel waste reducing practices which have widespread applicability in the industry. The goal is to demonstrate technology for no discharge of pollutants by July 1, 1985. Four projects are completed and three are currently in progress. Five are concerned with waste treatment and the other two deal with in-plant methods to reduce pollution. These are discussed further in Sections V and VI.

2. U.S. Department of Agriculture
   Eastern Regional Research Center (ERRC)
   600 E. Mermaid Lane
   Philadelphia, Pennsylvania 19118
   Dr. J. W. Harlan, Chief-Hides and Leather Laboratory
   (215) 247-5800

This center is developing procedures for reducing the pollution that results from processing hides and skins into leather. At present the laboratory is involved in the investigation of bio-oxidation of lime-sulfide unhairing effluent with acclimated activated sludge as a means of reducing the waste discharge.

3. Tanner's Council of America, Inc. (TCA)
   411 Fifth Avenue
   New York, New York 10016
   Irving R. Glass, President (212) 686-7950

This council is a trade association of U.S. firms engaged in leather tanning and finishing. Its functions are to provide its members services pertinent to the operation of the tanning industry. These include compilation and distribution of statistics, development of technical standards, promotion, representation of the industry to the Federal government, weekly newsletter, and maintenance of a research laboratory.

4. Tanners' Council Research Laboratory
   University of Cincinnati
   Cincinnati, Ohio 45221
   William T. Roddy, Dir. (513) 475-2643

The research laboratory of the Tanners' Council offers members services for testing and analyzing products and materials, provides personnel to members for consultation on specialized problems, and makes available information and conducts workshops on waste management methods.

5. American Leather Chemists Association (ALCA)
University of Cincinnati
Cincinnati, Ohio 45221
William T. Roddy, Sec.-Tres. (513) 475-2643

The ALCA holds annual technical meetings, maintains standing, active technical committees and it publishes monthly the Journal of the American Leather Chemists Association which summarizes developments in all subject areas of the leather industry. The Association has a standing committee in the wastewater abatement field and has sponsored three recent wastewater symposia.

SECTION V
REVIEW OF RECENT WORK WITHIN THE INDUSTRY

EPA Projects

There are four completed projects sponsored by the EPA in addition to an in-house report. A tabulation and description of these follow:

EPA Research Report Number	Title/Author
12120 9/69	Activated Sludge Treatment of Chrome Tannery Wastes; A. C. Lawrence Leather Co., South Paris, Maine.
12120 9/70	Treatment of Sole Leather Vegetable Tannery Wastes; Dr. J. David Eye, University of Cincinnati.
12120DIK 12/70	Anaerobic-Aerobic Lagoon Treatment for Vegetable Tanning Wastes; Clinton E. Parker, University of Virginia, Charlottesville.
EPA-R2-73-209 4/73	Secondary Waste Treatment for a Small Diversified Tannery; Edward L. Thackston, Caldwell Lace Leather Co., Auburn, Kentucky.

EPA In-house Report

EPA-440/1-74-016-a	Development Document for Effluent Limitations Guidelines and New Source Performance Standards for the Leather Tanning and Finishing Point Source Category; Effluent Guidelines Division, U.S. EPA.

Activated Sludge Treatment of Chrome Tannery Wastes - consisted in pilot-plant scale, the development and testing of a waste treatment process for combined tannery and municipal sewage capable of meeting the stream classification standards established for direct discharge. The process consisted of equalizing and mixing of the alkaline and acid water, primary sedimentation, addition of screened municipal sewage, activated sludge treatment and secondary sedimentation of the mixed waste, and chlorination. Sludges resulting from the treatment of the wastes and sewage were dewatered by centrifuge and were found to be suitable for burial. Design factors for the process were developed, and studies were made of the reactions which form the basis for the processes employed in the pilot plant.

The results indicate that by use of conventional sewage treatment unit processes, mixtures of chrome tannery wastes and municipal sewage could be treated successfully. Operating at 0.03 l/sec (0.5 gpm) sanitary sewage and 0.13 l/sec (2.0 gpm) of carbonation basin effluent produced an average BOD_5 of 32 mg/l with a high of 93 mg/l and a low of 14 mg/l, the suspended solids removal averaged 75 percent with a resultant effluent concentration of about 200 mg/l, sulfide removal through the system averaged 99 percent or a 0.76 mg/l final effluent, and chromium averaged 3.6 mg/l for an 88 percent removal. The mechanism by which the sulfide was removed was found to be a biological process in which the sulfides are oxidized to sulfate. To test the effect of chromium on the activated sludge, additions of tri-valent chromium ranging in concentrations of 40-160 mg/l were made to the influent of the aeration basin. It was determined that there was no negative effect on the operation of the activated sludge unit.

Capital and operating cost of full-scale treatment of combined 3785 cubic meters (one million gallons) tannery and municipal effluent was estimated at $0.016 per foot of leather based on September 1969 costs.

Treatment of Sole Leather Vegetable Tannery Waste - involved four major studies, two pilot-scale and two full-scale. The basic objective of the studies was to find a technically feasible and economic procedure for treating the wastes from a sole leather vegetable tannery. A detailed identification of the sources of all wastes as well as a comprehensive characterization of each waste fraction was made for the International Shoe Company Tannery located at Marlinton, West Virginia.

A large percentage of the pollutants initially were found in a relatively small fraction of the total waste volume. The treatment scheme consisted of separation and pretreatment of the individual waste streams followed by mixing all waste streams for additional treatment in an anaerobic-aerobic lagoon system. The lime bearing wastes from the beamhouse were screened, treated with polyelectrolytes, and then clarified. The lime sludge was used for landfill. The system was designed to treat 3785 cubic meters (one million gallons) of waste per week. BOD_5 was reduced 85-95 percent.

Cost of the total system was approximately $40,000 and operating costs were estimated at $15,000 per year or $0.07 per hide processed.

Anaerobic-Aerobic Lagoon Treatment for Vegetable Tanning Wastes - consisted of a laboratory and field development project at Virginia Oak Tannery, Inc., Luray, Virginia. The purpose was to evaluate the effectiveness of an anaerobic-aerobic lagoon in treating spent vegetable tannins blended with batepool and soak wastewaters. The anaerobic-aerobic lagoon system was used to treat combined waste streams with BOD_5 concentration of approximately 1000 mg/l. Aeration and volume of the lagoon were fixed and flow to the system was increased so as to observe five operational phases. These phases resulted in the system going from aerobic to anaerobic-aerobic conditions. After reaching anaerobic-

aerobic conditions, doubling the BOD_5 load did not result in a significant decrease in BOD_5 removal efficiency. At a loading of 1.73 lbs of BOD_5/ 1000 ft^3/day/B.hp. and 7,000 lbs of COD/1000 ft^3/day/B.hp., an anaerobic-aerobic lagoon 4.5 meters deep (15 feet), aerated with mechanical aerators, provide soluble BOD_5 removal of 81 percent and soluble COD removal of 58 percent.

The lagoon system proved successful in removing degradable organics but the color of the wastewater was not reduced by this method of treatment. The author concluded that a major problem in treatment was the color due to spent vegetable tannins and that it will dictate the most desirable approach to wastewater treatment.

A completely mixed aeration unit was used in the laboratory to study the biological degradation of spent vegetable tannins. Concentrated and diluted tannins were studied by varying the detention time in the aeration unit. It was found that approximately 60 percent of the COD of spent vegetable tannins was not biologically degradable and the generally accepted substrate-growth interaction relationship required modification to take into account the non-degradable fraction of COD. Yield coefficient, endogenous respiration rate, and specific growth were computed from the results of the laboratory study.

Secondary Waste Treatment for a Small Diversified Tannery - reported on the feasibility of completely treating tannery wastes in a tannery that uses all three types of leather tannages (chrome, vegetable, and alum). This was demonstrated on a full-scale operation at the Caldwell Lace Leather Co. of Auburn, Kentucky, and basic design data for full-scale treatment applicable to other tanneries was obtained.

A modified completely-mixed activated sludge plant was constructed along with facilities to handle specific problem wastes. A study conducted after a year's operation showed that the plant was performing as expected except for solids carryover from the secondary clarifier due to mechanical problems. After correction, the plant removed 97 percent of the suspended solids and 95 percent of the BOD_5. The plant was operating as an extended aeration plant due to conservation measures in the tannery which reduced the waste load.

The Development Document for Effluent Limitation Guidelines and New Source Performance Standards for the Leather Tanning and Finishing Point Source Category (1) is an EPA publication which summarizes wastewater characteristics and treatment technology. As explained in the report, this document presents the findings of an extensive study of the industry for the purpose of developing effluent limitations guidelines, standards of performance, and pretreatment standards. Supportive data and rationale for development of the proposed effluent limitations guidelines are contained in the report.

Non-EPA Projects

Recent efforts in wastewater management outside EPA are reviewed and presented. The industry journals which are readily available and provide regular reporting of recent developments in the industry are the source of most of the work reviewed here and a listing can be obtained from Section VIII, References.

Tannery Wastewater Disposal

New developments in the disposal of tannery wastewater were reported by van Vlimmeren and van Meer (3). Three areas of concern are discussed and are as follows: 1) Reduction in the amount and degree of pollution

of the effluent, 2) treatment of tannery wastewater and, 3) charges to be paid. Water use reduction is reported from 100-200 l/kg of hide to 25 l/kg by the introduction of batch washing to replace continuous rinsing. Other methods to reduce the waste load reported are mixing of beamhouse and tanhouse waste flows, hair-save unhairing, and unhairing in the first soaking liquor. In the latter case, after acidification to pH 3.5 and settling, the COD and nitrogen content in the effluent from soaking-unhairing is reduced by 89 and 90 percent, respectively. Tannery wastewater treatment is centered on the areas of sulfide removal, chromium removal, and biological oxidation. The recommended treatment for sulfides is oxidation after addition of a manganous salt as a catalyst. Due to increasingly stringent regulations regarding chromium, the authors recommend recovery from the spent liquor and reuse in the tanning operations. For biological treatment, the advantages of an oxidation ditch are discussed with reports of successful full-scale operation. Various surcharge systems for payment when discharging to municipal treatment are discussed along with a system developed by the Institute for Leather and Shoe Research which is in use in Holland today.

Treatment of Tannery Effluents

Bailey (4) in a two-part article presents a review of tannery effluents and their treatment. Part 1 deals with the origin and composition of the effluents. Each process and subprocess is discussed with its contribution to the wasteload.

The conclusion deals with methods of treating the effluent with emphasis on discharge to public sewers. For protection of the sewer and the biological treament process, methods of sulfide and chromium salts removal are discussed in the pretreatment scheme.

Tannery Effluent Disposal: Water Quality Aspects

Summarized by Ludvik, et al. (5) are the effects of tannery effluents upon water quality, including organoleptic and toxic effects. Organoleptic properties consist of odor, color, and foaming. The toxic properties of some chemicals used in the tannery are investigated with Bacillus megatherium as the test organism. The LD_{50} concentrations of sulfides, tri-,and hexa-valent chromium are such that effluents out of normal tannery operations would not be lethal. It was found that two very toxic agents, pyrocatechol and pyrogallol, originating in synthetic tannins and vegetable tan liquors, respectively, are lethal at doses as little as 3 mg/l. Higher organisms were found to be more sensitive, and mixed cultures were more resistant to destruction.

Disposal methods for the tannery effluent are outlined with equations given for optimization of design and operation of an activated sludge process. Sludge processing research concludes that the loading of sludge beds by dry substance under the climatic conditions of Czechoslovakia can be operated successfully at 150-200 kg/m^2 per year and that the dose of chromium in the sludge should not be higher than 1000 kg/hectare.

Cattlehide Processing: Water Pollution Reduction

Alternatives are presented by Poats and Naghski (6) to the traditional method of receiving salt cured hides in the tannery. Two solutions are proposed; 1) Transfer of beamhouse operations to hide processor where green hides are blue chrome tanned and 2) transfer of total tanning operations to the hide processor who would then market fully tanned (crust) leather to the finisher.

A study was made to determine the feasibility of the two alternatives. Preliminary results indicate both processes would be feasible from a leather quality point of view. Analysis regarding the economic feasibility of the alternatives will be reported at a later date. Problems the industry would experience upon adoption of either alternative would be 1) the question of the marketability of chrome-tanned leather, 2) investment in new equipment and relocation of skilled labor by hide processor, 3) loss of internal quality control of hide material by tanners and 4) maintenance of salt-curing facilities to supply the export market.

Tannery Wastes Commission

The minutes of the International Union of Leather Technologists and Chemists Societies fifth meeting are reported in the Journal of the Society of Leather Technologists and Chemists (7). Various members were given the duty to collect and collate information on topics to be considered by the Commission and their reports are presented in the minutes. Only the topics and authors are presented below and the report should be referred to for further details.

1. Influence of unhairing method upon the amount and degree of pollution - W. Fendrup (Denmark).
2. Improvements in the uptake of tannins by Skin -A. J. J. van Meer (Holland).
3. Sulphide oxidation - D. A. Bailey (Great Britain) and A. J. J. van Meer.
4. Methods of Biological Treatment - A. J. J. van Meer.
5. Toxic Effluents of Sulphide and Chromium - D. A. Bailey.
6. Effect of Mixing Tannery Effluent with Domestic Sewage - W. Frendrup.

7. Sludge Disposal - B. Vulliermet (France)
8. Specific Criteria for the Discharge of Tannery Effluents: Methods for the Assessment of Charge - P. J. van Vlimmeren (Holland).

Chromium Recovery and Reuse

Hauck (8) reports on three methods of chrome recovery and reuse in order to utilize the unspent portion of chrome in the tanning process which amounts to about 30 percent. These three methods are reuse through replenishment, direct reuse of the spent liquor, and chrome recovery. For reuse, a review of past work in this area is covered with reports of successful operation. Suggestions are given by the author on possible modifications of the processes covered in the review. The next possibility for chrome utilization, through direct reuse of the spent liquor, is discussed with the possible use in either the pickle liquor or as float in tanning. Several methods of chrome recovery are reviewed with the conclusion that precipitation with an alkali was most feasible in producing the chromium in a form suitable for reuse in a fresh liquor. Procedures are given for preparing the product for reuse along with tables showing the amount of various alkali necessary per quantity of chromic oxide.

Trivalent Chromium in Tannery Effluents

van Meer (9) presents a review of information on the use of chromium in order to clear up misconceptions that might exist regarding its presence in tannery effluents. Four areas covered are; 1) tanning with chromium salts, 2) amounts of tri-valent chromium (Cr^{3+}) discharged and general precautions which can reduce these amounts 3) toxicity of tri-valent

chromium in wastewaters, and 4) tri-valent chromium in the sludge of sewage works. He concludes that: 1) Tannery effluents do not contain Cr^{6+}, 2) A distinction must be made between Cr^{6+} and Cr^{3+} and also between soluble and insoluble Cr^{3+} compounds when setting effluent limitations, 3) It must be considered if the sludge will be disposed on land or not when regulatory agencies establish a tolerance level for Cr^{3+}, 4) Within certain limits the amounts of Cr^{3+}discharged per day may be more important that the concentration.

Chrome Tanning Systems

Davis and Scroggie (10) present a series of five articles dealing with the investigation of commercial chrome tanning systems. The five are as follows:

1. Separation of the complexes present by gel filtration and effects of aging and basification.
2. The rate of uptake by hide of the different chromium complexes from solution.
3. Recylcing of used chrome liquors.
4. Recycling of chrome liquors and their use as a basis for pickling.
5. Recycling of chrome liquors in commercial practice.

In part 1, methods and results of experiments on the separation of the chromium complexes are given. The distribution of the complexes are determined after aging in both unbasified and basified solutions. The rate of uptake by the hide of the chromium complexes is then determined.

Experiments resulted in chromium uptakes from 64 to 82 percent. It was determined that the poor exhaustion was a result of a mass-action effect and not inactive complexes. From this it was concluded that recycle of chrome liquors would be feasible in the sense that there would be no buildup of inactive complexes in the liquor.

Part 3, involving recycle of used chrome liquors was first accomplished on small-scale trials for a period of 13 successive runs with no problem. It was reported, after chemical analyses that the concentration of chromium, sodium chloride, and sodium sulfate in the residual liquor had stabilized after three cycles and that there was no decrease in the rate of chromium uptake. Succeeding large scale trials accomplished similar results with no deterioration in leather quality.

In part 4, feasible results are given of efforts using spent chrome liquors as a basis for pickling prior to regeneration for chrome tanning. Reported advantages of this system are the ease at which it fits into the industry trend to use short pickle systems, the decrease in the use of neutral salt in processing, and the removal of the pickle effluent from the waste stream.

Part 5, details successful application of the preceding process on a commercial scale. Reagent costs are substantially reduced in addition to waste load reduction using this process. It is stated that in-plant changes to adopt the recycle system require at most some modification of existing conventional tanning drums to allow recovery of the liquor and installation of facilities for holding and transferring the liquor.

Tannery Effluent Control

Satyendra (11) reports on efforts to reduce the strength of the effluent at Garden State Tanning Co., Reading, Pennsylvania. Initial efforts were toward the reduction of sulfide. A 40 percent decrease was obtained by adopting a hide processor. To reduce the remaining sulfide, several methods were attempted. These included treating with ferrous sulfate to precipitate an insoluble ferrous sulfide, and oxidation of ferrous sulfide using manganese sulfate as a catalyst. Also studied was the use of nickel chloride and manganese chloride as catalysts. Pilot-plant experiments proved the use of manganese sulfate most encouraging. Best oxidation was obtained when the amount of Mn^{++} added is one tenth the amount of $S^{=}$ present in the system and by dissolving the catalytic agent prior to addition in the aeration tank.

Chrome recovery was obtained using the optimum amount of lime and Primafloc A-10 (Rohm and Haas) for the most rapid precipitation without formation of cloudiness and discoloration. For that particular waste, the most optimum quantities were for every 170 liters of exhaust chrome liquor, 852.7 grams lime powder and 157.5 grams Primafloc A-10 would be needed. The chrome sludge was then dissolved in concentrated sulfuric acid forming chromium sulfate for reuse in tanning.

Recycle of Unhairing Liquor

Results of small-scale trials on recycling of lime-sulfide unhairing liquors were reported by Money and Adminis (12) in which the liquors have been recycled up to 27 times without deterioration in leather quality. Different soak methods were compared to determine which did not cause a buildup of salt in the liquor that would affect the swelling and unhairing. Matched-side trials were conducted comparing -

1. conventional unhairing and unhairing with lime recycle after solids removal,

2. conventional unhairing and unhairing with lime recycle and no solids removal, and

3. unhairing using lime recycle with solids and unhairing using lime recycle without solids.

All three trials produced no inferior quality leather. Reports are that fats accumulate in recycled lime liquors if the solids are not removed. Advantages stated by the authors are the improved effluent quality and the savings in water use. The work has been extended to large-scale tannery trials.

Lime-Sulfide Effluent: Protein Recovery

Happich, et al, (13) report results of research and experiments in the recovery of proteins from lime-sulfide unhairing effluents of several tanneries, and the analysis and nutritional value of the recovered proteins. Procedures are given for the recovery and purification of the proteins. The four major steps are -

1. Separation of suspended solids from solution.
2. Separation of soluble inorganic compounds.
3. Acid precipitation of the proteins.
4. Washing and drying of the proteins.

Attention was given to the effect of the precipitation pH on the composition of the proteins and to the effect of aging the effluent on protein recovery and composition. The precipitates at pH 5.0 and 3.8 had

respective protein contents of 9.2 and 3.8 percent. Results of aging the effluent for 30 days at 25°C produced undesirable changes in the yield, properties, and composition of the protein product.

Alternative Approach to Unhairing

Heidemann, et al., (14) report on a pilot-scale process using sodium peroxide in an alternate approach to unhairing. By placing the hides in a strong sodium peroxide solution the hair is destroyed quickly and the fiber structure is opened up in an hour. The process, from the raw hides to a wet blue leather stock, takes only six hours.

Liming and Tanning Without Effluent

Williams-Wynn (15) review methods for eliminating or reducing the waste load from the individual processes in leather tanning. Alternatives to salt curing are proposed with one method by the use of sodium chlorite. None of the methods are feasible for long term storage of the hides.

In the beamhouse, alternatives to liming are proposed with the most promising one being caustic soda but it also creates a sludge problem as with lime. Experiments by Williams-Wynn have shown that tanners in the hair-save process apply much more lime (4 percent solution) than necessary (1 percent solution), thus resulting in undissolved lime in the effluent.

Vegetable tannages with essentially no-effluent are discussed. These are the Liritan (Leather Industries Research Institute) process and the more advantageous Liritan Semi-Rapid Sole Leather Tannage now in use in South Africa. It combines the no-effluent properties of the former with the speed of drum tanning.

Beamhouse Wastewater: Chemical Treatment

Experiments into the reduction of the waste load from the beamhouse operations were reported by van Meer (16). This reduction was accomplished by the acidification of the residual liquors. The scheme involves oxidation in order to remove the sulfides. Several laboratory-scale experiments were carried out using the effluents from soaking, unhairing and liming or combinations thereof. It was found that segregation of the liming liquor and reuse of the soaking liquor in the unhairing operation was most feasible. This reduced the effluent to about 3-4 l/kg hide and reduced the COD and N load of the wastewater from these two operations by 89 and 90 percent, respectively. By keeping the liming liquor segregated, it was found that it contributed only 8 and 5 percent of the total COD and N load, respectively. Other benefits found from the above process are the good dewatering and filtering properties of the sludge. It was concluded that modification of the beamhouse process as suggested would be consistent with good leather quality.

Treatment for a Small Tannery

Young (17) discusses the waste treatment program at A. H. Ross and Sons Company prior to discharge to municipal treatment. It was desired to eliminate the multiple discharge (three sewer outlets) which carried combined wastes from the beamhouse, tan room, fat liquor and color mills, and pasting operations. The new system consisted of an equalization basin with an excess of beamhouse waste so there was no chance of hydrogen sulfide generation due to the pH staying above 10, hydrasieve, settling basin, neutralization tank, and finally discharge to the sewer. Results in effluent load were SS, 327 mg/l (81 percent reduction); BOD, 296 mg/l (65 percent reduction); fats and grease, 42 mg/l (80 percent reduction); and chromium, 8.6 mg/l (95 percent reduction).

Unhairing Effluents: Effects of Flocculants on Sedimentation

Experiments were conducted by Cooper, et al., (18) to determine the effects of various flocculants on the sedimentation of organic solids in tannery unhairing effluents. Several methods and agents were tried, including varying the order of addition. Alum was found unsuitable because of the need to lower the pH to 8 in order to cause flocculation which results in the release of hydrogen sulfide gas. Highest removals were obtained by first adding an anionic polyelectrolyte then a cationic polyelectrolyte followed by an inorganic electrolyte. Using this method, the COD was reduced by 56 percent and the volatile organic solids by 98 percent.

Wastewater Treatment

Kinman (19) describes the options studied for upgrading the wastewater treatment plant at Bona Allen, Inc., Buford, Georgia. Considered were activated sludge and an aerated lagoon. The existing system consisted of screening, equalization, chemical feed, primary clarification, trickling filter, and secondary clarification. An aerated lagoon was chosen for use after secondary clarification due to ease of operation and uniformity of the effluent as compared to the activated sludge unit. Removal of selected wastewater parameters in the aerated lagoon over a 40 day operation period included the following percent removals, 48.1 for BOD_5, 17.1 for COD, 18.7 for color, and 17.2 for the tannin.

High Rate Biofilters

Bailey, et al. (20) report on the application of high rate bio-filters in the leather tanning industry. Four possible applications are -

1. pretreatment prior to municipal treatment,
2. roughing process prior to treatment in a conventional plant,
3. relief of overloaded existing plant, and
4. "partial" biological treatment for effluents discharging to river estuaries.

Reports on pilot plant operation of the high-rate bio-filter in the leather industry show an average removal of 40 percent of the applied BOD. He suggests that chemical pretreatment with lime and iron or alum salts would prove feasible in reducing the size of subsequent biological treatment. Cost comparison with conventional filters show the high-rate filter being preferable.

Huber and Jones (21) report on efforts in the design and construction of combined treatment for municipal and leather tanning wastes in which the tannery contributed 20 percent of the flow and 90-95 percent of the BOD and suspended solids. Major design considerations consisted of the following:

1. Transportation of tannery waste.
2. Selection of method of treatment.
3. Protection of secondary treatment process.
4. Solids dewatering and disposal.
5. Odor control.

Pretreatment facilities constructed at the tannery included screening for the hide and beamhouse wastewaters prior to combining with the rest of the tannery flow which enters an equalization tank. Processes chosen in the plant design were:

1. Comminution and grit removal for the municipal wastewater,
2. aerated quick-mix tank for the blending and addition of chemicals to the combined tannery wastewater flow,
3. primary clarification of the combined wastewater flow,
4. activated sludge aeration system,
5. final clarification, and
6. chlorination.

The total construction cost was $4.2 million with operation and maintenance cost estimated at $0.046 per cubic meter ($175 per million gallons) for domestic waste and $0.137 per cubic meter ($520 per million gallons) for the tannery waste.

SECTION VI
ON-GOING EPA PROJECTS

Current projects funded by the EPA are as follows:

1. "Aerobic Biological Treatment, Sludge Dewatering and Disposal, and Effluent Reuse for a Side Leather Tannery" S. B. Foot Tanning Co., Red Wing, Minnesota.
2. "Removal and Recovery of Sulfide from Tannery Wastes" Blueside Real Estate, Inc., Kansas City, Missouri.
3. "Leather Tannery Waste Management through Process Change, Reuse and Pretreatment" Pfister and Vogel Tanning Co., Inc., Milwaukee, Wisconsin.

The above projects are described below:

The project at S. B. Foot Tanning Company will provide a full-scale demonstration and investigation of primary sedimentation, biological secondary treatment utilizing aerated secondary lagoons operated in various physical arrangements, and primary and secondary sludge dewatering and disposal by means of pressure filtration and land application. The system will treat the total waste flow of 7.9 mld (2.1 mgd) from the side leather tannery. In addition, an evaluation will be conducted to determine the influence of final treatment plant effluent reuse on hide processing and quality of the finished product by reusing it in the beamhouse operations. The final report is in preparation.

The basic objectives of the project at Blueside Real Estate, Inc. are to translate pilot-plant results into the development and demonstration on a plant scale of a process for removing sulfide from the effluent of a chrome tannery and recovering the sulfide in a form reuseable in the

tannery. The project will demonstrate the technical feasibility of the sulfide removal method and will determine the economics of the process on a full-scale plant.

The project with Pfister and Vogel Tanning Co., Inc. will demonstrate that it is technically and economically feasible to achieve major reductions in the pollution load discharge from a large side leather tannery through process changes, reuse and recovery techniques, and pretreatment methods. Conventional batch type tanning operations will be replaced by newly developed hide processing machines in which the hide is not removed from the unit until the tanning step has been completed. This process change will permit a waste volume reduction of approximately 50 percent. Additional major waste reductions will result from the recovery of processing chemicals and the reuse and pretreatment of individual waste streams. Recovery of soluble proteins extracted from the hides will be investigated. Adequate sampling will be performed to achieve parameter weight balances throughout multiple process cycles to characterize the tannery effluents. The final report is in preparation.

SECTION VII
FUTURE AREAS OF CONCERN

Areas of concern for future research in pollution control in the tanning industry center mainly on in-plant changes to eliminate certain constituents from the waste stream. Controlling the waste discharge at its source is considered the most efficient means of reducing pollution with the added benefit that is gained due to substantial savings on operating costs. The leather tanning industry is one that offers many opportunities for reuse of wastewater from its different processes. In some cases such as chromium, there are no practical reserves of the ore in the U.S. (22), therefore, efforts should be made toward conserving it to insure an adequate supply.

Research and development efforts on reducing the wastewater load from beamhouse operations have received considerable attention (6, 11, 12, 13, 14, 15, 16). These include transferring beamhouse and part of the tanning operations to the hide processor, catalytic sulfide oxidation, recycle of and alternatives to lime-sulfide unhairing liquors, recovery of protein from unhairing effluents, alternatives to salt curing, and segregation of certain waste streams. The promising small-scale development (12) in the recycle of lime-sulfide unhairing effluents is a step toward meeting the goals of no discharge of pollutants by eliminating this waste stream altogether. The information obtained in this development work should lead to adoption of this process in full-scale application.

Other areas in which process change, reuse, or recovery might have application to the lime-sulfide unhairing liquors are in the reduction of the amount of lime used, alternatives to lime unhairing, and unhairing in the first soak liquor. Lime use on the order of 1 percent is reported (15) to have no effect on unhairing efficiency. This level would reduce the undissolved lime in the effluent and alleviate a portion of the sludge handling problem that tanners in urban areas face.

Due to the importance of product differentiation in the tanning industry, not all process changes available for the industry would be applicable to an individual tannery. By providing several viable alternatives, the tanner would have means to reduce his waste load and still produce a leather with the quality and characteristics desired.

Investigations (8, 10, 11, 15) into methods of reducing the effect of the tanhouse on the waste load have provided the preliminary studies necessary for full-scale application in a commercial tannery. Most notable are two processes already being applied that make use of no effluent tannages. These are the Liritan process developed in South Africa for vegetable tanning (15) and the other, not believed to be practiced in the U.S., is the direct reuse of the spent chrome liquor as the make-up for the pickle acid and then replenishing it for use in the chrome tanning process. As mentioned in Section V, this method has been successfully tried on a commercial scale in Australia (10). Adoption of this process would eliminate the pickling and tanning processes from the waste stream during normal tanning operations. Besides reducing the wastewater flow, no longer would there be a need for chemical pretreatment to remove chromium.

With the increasing use of synthetic tanning, there is potential for introducing new toxins to the waste stream. One report (5) has shown agents originating in synthetic tannins to be toxic to test organisms on the order of 3 mg/l, therefore, before adoption of any new synthetic tanning agent its effect on biological treatment and the biota of the receiving stream should be assessed.

Tannery effluent treatment investigations (3, 5, 17, 19, 20, 21) provide the background information into the effectiveness of the various systems applicable to the industry. None report discharge levels that are capable of meeting established effluent limitations on a consistent year

round basis, and as reported in the Development Document for Effluent Limitations Guidelines... (1) there are no existing tannery treatment systems in the U.S. that are able to consistently meet the 1977 discharge limitations. Reports (3, 23) indicate that the carrousel oxidation ditch system is very effective in providing treatment and could produce an effluent meeting these limits in the leather tanning industry. European tanneries using this system are achieving consistently low strength effluents, 10-10 mg/l BOD_5 and SS, operating in northern climates. This system is also effective in producing a significant TKN reduction.

In regard to the effluent limitations, there is much concern in the tanning industry (24) over the proposed pretreatment standards and the associated methods and problems of sludge handling resulting from pretreatment. Further development into recycling of process streams should be pursued to reduce the sludge problem and relieve the load on secondary wastewater treatment systems. One parameter of major concern for 1983 is the TKN limit, and it is believed that this is one area of needed future effort.

Based on forecasts of trends in the industry, the importance of category 4 (Finishing of Tanned Hides) and 6 (Chrome Tanning and No Finishing) will be increased due to the movement of the beamhouse and tanhouse to a separate location and selling the tanned hides in the blue stage to the finisher. Long range forecasts might see the inclusion of the blue-stage tanner next to the slaughter house operations in order to eliminate the necessity of salt preservation of the hides thus reducing transportation and waste treatment costs.

SECTON VIII
REFERENCES

1. Development Document for Effluent Limitations Guidelines and New Source Performance Standards for the Leather Tanning and Finishing Point Source Category. Office of Air and Water Programs, Environmental Protection Agency. EPA-440/1-74-016-a, March 1974.

2. Leather Tanning and Finishing Point Source Category. Effluent Limitation Guidelines. Federal Register, Vol. 39, No. 69, 9 April 1974.

3.. van Vlimmeren, P. J., and A. J. J. van Meer. Recent Investigations into the Disposal of Tannery Waste Water. Institute Voor Leder En Schoenen TNO. nr. 187/74L.

4. Bailey, David A. Tannery Effluents and Their Treatment. Effluent and Water Treatment Journal. May and June 1970.

5. Ludvik, Jaromin, A. Orlita, S. Siska, K. Jansky, and J. Bohm. Water Quality Aspects of Tannery Effluents Disposal. Journal of the American Leather Chemists Association. Volume 68, No. 7, 1973.

6. Poats, Frederick J., and J. Naghski. Alternatives for Reducing Water Pollution in Cattlehide Processing and Tanning. U.S. Department of Agriculture, Economic Research Service, MTS-191, November 1973.

7. IULCS Tannery Wastes Commission - Minutes of the Fifth Meeting of the Commission in Barcelona, 2nd-5th May 1973. Journal of the Society of Leather Technologists and Chemists. Vol. 58, Jan-Feb. 1974.

8. Hauck, Raymond A. Report on Methods of Chromium Recovery and Reuse from Spent Chrome Tan Liquor. Journal of the American Leather Chemists Association. Vol. 67, No. 10, 1972.

9. van Meer, A. J. J. Trivalent Chromium in Tannery Effluents. Institute Voor Leder En Schoenen TNO, Waalwijk. September 1973.

10. Davis, M. H., and J. G. Scroggie. Investigation of Commerical Chrome-Tanning Systems, Part I-Part V. Journal of the Society of Leather Technologists and Chemists. Vol. 57, 1973.

11. Satyendra, Mohan De. Some Aspects of Tannery Effluent Control. Journal of the American Leather Chemists Association. Vol. 68, No. 8, 1973.

12. Money, C. A., and U. Adminis. Recycling of Lime-Sulphide Unhairing Liquors - I. Small Scale Trials. Journal of the Society of Leather Technologists and Chemists. Vol. 58, 1974.

13. Happich, W. F., M. L. Happich, J. E. Cooper, S. H. Feairheller, M. M. Taylor, D. G. Baily, H. W. Jones, E. F. Mellon, and J. Naghski. Recovery of Proteins from Lime-Sulfide Effluents from Unhairing Cattlehides. Journal of the American Leather Chemists Association. Vol. 69, No. 2, 1974.

14. Heidemann, E., O. Harenberg, and J. Cosp. A Very Rapid Liming and Tanning Process Without Effluent. Journal of the American Leather Chemists Association. Vol., 69, No. 12, 1973.

15. Williams-Wynn, D. A. No-Effluent Tannery Processes. Journal of the American Leather Chemists Association. Vol. 68, No. 1, 1973.

16. van Meer, A. J. J. Some Aspects of a Chemical Treatment of the Waste Waters from the Beamhouse. Journal of the American Leather Chemists Association. Vol. 68, No. 8, 1973.

17. Young, Harland H. Effluent Treatment for a Small Tannery. Journal of the American Leather Chemists Association. Vol. 68, No. 8, 1973.

18. Cooper, J. E., W. F. Happich, E. H. Bitcover, E. F. Mellon, and E. M. Filachione. Effect of Flocculants on the Sedimentation of Organic Solids in Tannery Unhairing Effluents. Proceedings, 29th Annual Purdue Industrial Waste Conference, 8 May 1974, Purdue University, West Lafayette, Ind.

19. Kinman, R. N. Treatment of Tannery Waste Water from Bona Allen. Inc., Buford, Georgia. Journal of the American Leather Chemists Association. Vol. 68, No. 9, 1973.

20. Bailey, D. A., M. K. Leafe, K. S. Robinson and Stella Collins. The Role of High Rate Bio-filters in the Leather Industry. Journal of the Society of Leather Treades' Chemists. Vol. 56, p. 200.

21. Huber, Carl V., and Gordon E. Jones. Combined Treatment of Leather Tannery and Municipal Wastes at Grand Haven, Michigan. Proceedings, 29th Annual Purdue Industrial Waste Conference, 9 May 1974, Purdue University, West Lafayette, Ind.

22. Holliday, R. W. Mineral Facts and Problems. U. S. Department of Interior Bureau of Mines, 1965 Edition.

23. Communication with W. L. Banks and Donald F. Anderson, EPA; and Dr. Robert M. Lollar, Tanners' Council of America, Inc.

24. Communication with Dr. Robert M. Lollar and Eugene L. Kilik, respectively, Technical Director and Executive Vice-President, Tanners' Council of America, Inc.

TECHNICAL REPORT DATA
(Please read Instructions on the reverse before completing)

1. REPORT NO. EPA-600/2-76-230	2.	3. RECIPIENT'S ACCESSION NO.
4. TITLE AND SUBTITLE LEATHER TANNING AND FINISHING WASTE MANAGEMENT RESEARCH AND DEVELOPMENT PROGRAM		5. REPORT DATE September 1976 (Issuing Date)
		6. PERFORMING ORGANIZATION CODE
7. AUTHOR(S) James F. Scaief		8. PERFORMING ORGANIZATION REPORT NO.
9. PERFORMING ORGANIZATION NAME AND ADDRESS Food & Wood Products Branch, IERL-Cincinnati Corvallis Field Station 200 SW 35th Street Corvallis, Oregon 97330		10. PROGRAM ELEMENT NO. 1BB610
		11. CONTRACT/GRANT NO.
12. SPONSORING AGENCY NAME AND ADDRESS Industrial Environmental Research Laboratory - Cin., OH Office of Research and Development U.S. Environmental Protection Agency Cincinnati, Ohio 45268		13. TYPE OF REPORT AND PERIOD COVERED Final
		14. SPONSORING AGENCY CODE EPA/600/12
15. SUPPLEMENTARY NOTES		

16. ABSTRACT

Reviewed herein is the waste management research and development program for the leather tanning and finishing industry. Emphasis is placed on the Environmental Protection Agency's (EPA) role, both past and present, and major developments over the past few years outside EPA, including international developments. Future waste management needs for the industry are defined and U. S. organizations involved in the field are presented with a brief description of their objectives.

17. KEY WORDS AND DOCUMENT ANALYSIS

a. DESCRIPTORS	b. IDENTIFIERS/OPEN ENDED TERMS	c. COSATI Field/Group
Leather, Tanning Materials, Waste Treatment, Reviews, Research Management, Waste Water.	Literature Review, Discharge Limitations	13B

18. DISTRIBUTION STATEMENT Unlimited; Available from EPA-Corvallis (see 9) and GPO	19. SECURITY CLASS *(This Report)* UNCLASSIFIED	21. NO. OF PAGES 45
	20. SECURITY CLASS *(This page)* UNCLASSIFIED	22. PRICE

EPA Form 2220-1 (9-73)

☆ U.S. GOVERNMENT PRINTING OFFICE: 1977—757-056/5478