United States
Environmental Protection
Agency

Industrial Environmental Research
Laboratory
Research Triangle Park NC 27711

EPA-600/7-78-210
November 1978

EPA

SO_2 Abatement for Stationary Sources in Japan

Interagency Energy/Environment R&D Program Report

RESEARCH REPORTING SERIES

Research reports of the Office of Research and Development, U.S. Environmental Protection Agency, have been grouped into nine series. These nine broad categories were established to facilitate further development and application of environmental technology. Elimination of traditional grouping was consciously planned to foster technology transfer and a maximum interface in related fields. The nine series are:

1. Environmental Health Effects Research
2. Environmental Protection Technology
3. Ecological Research
4. Environmental Monitoring
5. Socioeconomic Environmental Studies
6. Scientific and Technical Assessment Reports (STAR)
7. Interagency Energy-Environment Research and Development
8. "Special" Reports
9. Miscellaneous Reports

This report has been assigned to the INTERAGENCY ENERGY-ENVIRONMENT RESEARCH AND DEVELOPMENT series. Reports in this series result from the effort funded under the 17-agency Federal Energy/Environment Research and Development Program. These studies relate to EPA's mission to protect the public health and welfare from adverse effects of pollutants associated with energy systems. The goal of the Program is to assure the rapid development of domestic energy supplies in an environmentally-compatible manner by providing the necessary environmental data and control technology. Investigations include analyses of the transport of energy-related pollutants and their health and ecological effects; assessments of, and development of, control technologies for energy systems; and integrated assessments of a wide range of energy-related environmental issues.

EPA REVIEW NOTICE

This report has been reviewed by the participating Federal Agencies, and approved for publication. Approval does not signify that the contents necessarily reflect the views and policies of the Government, nor does mention of trade names or commercial products constitute endorsement or recommendation for use.

This document is available to the public through the National Technical Information Service, Springfield, Virginia 22161.

EPA-600/7-78-210
November 1978

SO_2 Abatement for Stationary Sources in Japan

by

Jumpei Ando

Chuo University
Tokyo, Japan

Contract No. 68-02-2161
Program Element No. 1NE624

EPA Project Officer: J. David Mobley

Industrial Environmental Research Laboratory
Office of Energy, Minerals, and Industry
Research Triangle Park, NC 27711

Prepared for

U.S. ENVIRONMENTAL PROTECTION AGENCY
Office of Research and Development
Washington, DC 20460

ACKNOWLEDGEMENTS

The author wishes to acknowledge the assistance of Teresa Sipes and Gary Jones of Radian Corporation, Austin, Texas in editing this report. In addition, Radian Corporation's typing and graphics support is gratefully acknowledged. (Radian Corporation's work was provided by EPA under contract number 68-02-2608, Task 29.)

The project officer wishes to acknowledge the support of R. Michael McAdams and Michael A. Maxwell of EPA's Industrial Environmental Research Laboratory at Research Triangle Park, NC in reviewing this report.

INTRODUCTION

This report is 4th in a series of reports on Japanese SO_2 control technology authored by Dr. Jumpei Ando. Previous reports are listed below.

EPA-R2-73-229	1973
EPA 600/2-76-013a	1976
EPA 600/7-77-103a	1977

Japan has stringent SO_2 emission and ambient air standards that have resulted in the development of SO_2 control technology. The primary control methods currently being practiced in Japan are flue gas desulfurization (FGD) and burning of low sulfur fuels. The total FGD capacity for the country exceeds 100,000,000 Nm^3/hr (33,000 MW equivalent). About 70 percent of this flue gas is derived from oil-fired boilers with the remainder coming from iron ore sintering operations, smelters, coal-fired boilers and other sources. Japan's program to limit SO_2 emissions has resulted in a significant reduction in ambient air concentrations.

In the United States, there is similar concern over SO_2 emissions. As a result, the U.S. Environmental Protection Agency (EPA) and Congress have promulgated SO_2 emission regulations for a variety of sources. As in Japan, the most near-term solution is FGD. FGD technology development has proceeded in the U.S. parallel to the development effort in Japan and is continuing in both countries.

The purpose of this report is to aid the U.S. development of SO_2 control technology by presenting information on the current status and recent developments of the Japanese development efforts. Regulations, clean fuel production technology and flue gas treating systems are all discussed, but the emphasis is on FGD systems. The information presented represents the most recent information as of March 1978.

CONCLUSIONS

The recent remarkable progress of FGD in Japan was induced by the following particular circumstances:

1) The serious air and water pollution problems which occurred in the 1960s aroused severe public criticisms and resulted in the most stringent regulations on pollution.

2) Prefectural governments have established pollution control centers and kept an eye on emissions using telemeter systems for major sources.

3) The central government has assisted industry in installing pollution prevention facilities by providing low-interest funds (6-7% per annum as compared with the usual 8-10%) and by allowing short-term depreciation for the facilities--7 years in most cases and two years in special cases.

4) Most FGD plants were constructed between 1968 and 1974, when the Japanese economy was growing rapidly at an annual rate of over 10%. Therefore, although the total investment for SO_2 control, including FGD and hydrodesulfurization of oil, exceeded 1 trillion yen (3.7 billion dollars) at the current value (1977), the investment did not prove an excessive load to industry.

5) Ammonia scrubbing and lime scrubbing were already applied in the 1950s to treat tail gas from sulfuric acid plants. Those techniques provided the basis for the rapid development in later years.

6) Japan had a short supply of sulfur and its compounds, which created a market for most of the FGD by-products. Use of oil as the major fuel has favored the recovery of high purity salable by-products.

Under such circumstances, over 1,000 commercial FGD plants have been constructed and contributed to the abatement of ambient SO_2 concentration. The rapid development, however, involved the following problems:

1) Major power companies were inclined to use clean fuels such as low-sulfur oil, naphtha, and LNG. In the early years, FGD was used mainly by smaller fuel consumers who had difficulty obtaining clean fuels. Numerous small FGD plants were thus installed. Fortunately most of the smaller plants employed simple sodium scrubbing to by-product sodium sulfite, which is useful for paper mills. However, it would have been much more rational for the large fuel consumers to apply FGD and the numerous small ones to use clean fuels.

2) The choice of clean fuels by the major power companies was prompted by the following considerations:

a) Doubt as to the reliability of FGD in the early years.

b) Consideration of the increasingly stringent regulations, which might make FGD inadequate in future.

c) Oversupply of by-products.

Among the above considerations, a) has proved to be groundless fears, but c) has turned out to be the real problem because of the rapid increase in the by-products and the limited land space for disposal of gypsum. Consideration b) will pose a serious problem if the plants with FGD systems are required to add facilities for NO_x removal by flue gas treatment.

3) FGD removes over 90% of SO_2 but not as much SO_3. It is possible that the emission of "sulfate" increases through the use of an FGD system with a poor mist eliminator. Although the ambient sulfate concentration in Japan has decreased with SO_2 concentration, further studies are needed to increase the SO_3 removal efficiency and to improve the mist eliminator.

4) The Japanese development efforts for FGD technology have been oriented to achieving high SO_2 removal efficiency and high reliability to meet the stringent regulations. Although removal efficiency and operability of 98-99% each have been achieved, the plant cost is rather high for most processes. It is necessary to develop more economical FGD systems, particularly under the recent economic depression.

5) So far gas reheating has been done mainly by after-burning, which not only consumes much fuel but also adds to pollution. Further study of reheating, including that by steam-gas heater or gas-gas heater, is needed.

The desulfurization efforts in Japan have almost reached the goal. The SO_x ambient concentration has almost met the ambient standard, a daily average of 0.04 ppm, which is equivalent to a 0.017 ppm yearly average and is the most stringent figure in the world.

In the U.S. and West Germany, FGD has been, or will be, applied mainly for coal-fired boilers.

Although there are not many coal-fired boilers in Japan at present, all of the FGD plants for the coal-fired boilers have attained 90-95% SO_2 removal and over 97% operability.

The authors hope that the Japanese experiences will offer useful suggestions for the global efforts for cleaner air.

CONTENTS

Acknowledgements ii
Introduction iii
Conclusions v
Figures xv
Tables xiv
Conversion Factors and Abbreviations xxiii

1. ENERGY AND ENVIRONMENT 1
   1.1 Energy Supply of Japan 1
   1.2 Sunshine Project 4
   1.3 Sulfur Input in Japan 8
   1.4 SO_x Standards and Regulations 10
      1.4.1 Ambient Standard 10
      1.4.2 Emission Standards 11
      1.4.3 SO_x Emission Tax 16
   1.5 SO_2 and Sulfate 17
      1.5.1 Ambient Sulfate Concentration 17
      1.5.2 Difference Between the U.S. and Japan in Ambient Sulfate Levels 22
   1.6 Emission and Regulation of NO_x 24
   1.7 Investment for Pollution Control 27
   1.8 Monitoring System for Pollution Control 30

2. OIL AND COAL PROCESSING 33
   2.1 Outline 33
   2.2 Flexicoking 35
   2.3 Eureka Process (Kureha Process) 37
   2.4 Cherry Process 41
   2.5 Coal-Residual Oil Hybrid Gasification Process.. 43
   2.6 Low-Calorific Gasification of Coal 47

CONTENTS (Continued)

2.7 Other Coal Treating Processes 50

2.7.1 Solvolysis Liquefaction 50

2.7.2 Plasma Gasification of Coal 51

2.7.3 Coal Gasification by the Molten Salt Lime Slurry Process 53

2.8 Fluidized Bed Combustion of Coal 56

2.8.1 Babcock Hitachi Ltd. 56

2.8.2 Kawasaki Heavy Industries 57

2.8.3 Mitsui Engineering and Shipbuilding 57

3. GENERAL ASPECTS OF FLUE GAS DESULFURIZATION 58

3.1 Major FGD Processes and Plants 58

3.1.1 Status of FGD for Power Companies 60

3.1.2 Status of FGD for the Steel Industry 65

3.1.3 Status of FGD for Nonferrous Smelters.... 67

3.2 By-Products 67

3.2.1 By-Product Production and Economics 67

3.2.2 Quality and Use of FGD Gypsum 72

3.3 Wastewater and Its Treatment 74

3.3.1 Wastewater 74

3.3.2 Wastewater Treatment 77

3.4 Mist Elimination 79

3.5 Gas Reheating 82

3.5.1 Reheating by Afterburning 82

3.5.2 Steam-Gas Heating 83

3.5.3 Gas-Gas Heating 83

3.5.4 Cost Comparison of Gas-Gas Heating and Afterburning 87

3.5.5 Commercial Application of a Ljungstrom Heat Exchanger for FGD 88

3.6 FGD Operation and Operability 89

3.6.1 Operation of Gas Sources 89

3.6.2 Bypass Systems 90

CONTENTS (Continued)

3.6.3 Operability 92

3.6.4 Labor Requirements 94

3.7 Economic Aspects 94

3.7.1 Investment Cost 94

3.7.2 Costs of Fuels and Desulfurization 97

4. WET LIME/LIMESTONE PROCESSES 100

4.1 General Description 100

4.1.1 Outline 100

4.1.2 Scale Prevention 107

4.1.3 Wastewater, Power Consumption and Operability 110

4.2 Operation of FGD Plants for Coal-Fired Boilers.. 114

4.2.1 General Description 114

4.2.2 Takasago Plant, EPDC (Mitsui-Chemico Limestone-Gypsum Process) 117

4.2.3 Isogo Plant, EPDC (Chemico-IHI Limestone-Gypsum Process) 125

4.2.4 Takehara Plant, EPDC (Babcock-Hitachi Limestone-Gypsum Process) 132

4.2.5 Omuta Plant, Mitsui Aluminum 138

4.2.6 Matsushima Plant, EPDC 140

4.2.7 Other Plants 140

4.3 Operation of FGD Plants with MHI Scrubbers for Oil-Fired Utility Plants 142

4.3.1 Owase-Mita Plant, Chubu Electric (MHI Lime-Gypsum Process)..... 142

4.3.2 Shimonoseki Plant, Chugoku Electric (MHI Limestone-Gypsum Process) 150

4.4 Operation of FGD Plants with the Moretana Scrubber 154

4.4.1 Characteristics of the Moretana Scrubber. 154

4.4.2 Kashima Plant, Sumitomo Metal 156

4.4.3 Takaoka Plant, Takaoka Kyodo Power 158

4.4.4 Evaluation 162

CONTENTS (Continued)

4.5 Operation of Other Major Limestone-Gypsum Process Plants for Oil-Fired Utility Boilers... 163

4.5.1 Tamishima Plant, Chugoku Electric 163

4.5.2 Karatsu Plant, Kyushu Electric 166

4.6 Operation of the Chiyoda Jet Bubbling Process.. 166

4.6.1 Outline 166

4.6.2 Jet Bubbling Reactor 168

4.6.3 Process Flow Diagram 174

4.6.4 Economics 174

4.6.5 Evaluation 180

5. INDIRECT AND MODIFIED LIME/LIMESTONE PROCESSES..... 181

5.1 General Description 181

5.1.1 Outline 181

5.1.2 Operability and Economics 186

5.2 Chiyoda Thoroughbred 101 (CT-101) Process..... 189

5.2.1 Characteristics..... 189

5.2.2 Operation of Commercial Plants 192

5.2.3 Economics 194

5.2.4 Evaluation 199

5.3 Sodium Limestone Gypsum Process..... 199

5.3.1 Outline..... 199

5.3.2 Ichihara Plant (Chiba Plant), Showa Denko 200

5.3.3 Sakaide Plant, Shikoku Electric..... 201

5.3.4 Anan Plant, Shikoku Electric..... 207

5.3.5 Buzen Plant, Kyushu Electric..... 207

5.3.6 Evaluation 210

5.4 Dowa Aluminum Sulfate Limestone Process..... 211

5.4.1 Outline..... 211

5.4.2 Okayama Plant, Naikai Engyo..... 211

5.4.3 Economics 214

5.4.4 Evaluation 214

CONTENTS (Continued)

5.5 Kawasaki Magnesium Gypsum Process 217
5.5.1 Kawasaki Magnesium Gypsum Process 217
5.5.2 Process Description 217
5.5.3 Operation of Commercial Plants 221
5.5.4 Evaluation 223
5.6 Kobe Steel Calcium Chloride Process 226
5.6.1 Characteristics 226
5.6.2 Operation of Commercial Plants 228
5.6.3 Evaluation 233
5.7 Other Indirect Lime-Gypsum Processes 234
5.7.1 Kurabo Acidic Ammonium Sulfate Process... 234
5.7.2 Nippon Kokan Ammonia Lime Process 236
5.7.3 Kureha Sodium Acetate Process 238

6. REGENERABLE PROCESSES 241
6.1 General Description 241
6.1.1 Ammonia Scrubbing 241
6.1.2 Wellman-Lord Process 243
6.1.3 Magnesium and Zinc Scrubbing 244
6.1.4 Sodium Sulfite By-Production 245
6.1.5 Shell Process 245
6.1.6 Activated Carbon Process 246
6.1.7 Operation Parameters of Major Plants..... 246
6.2 NKK Ammonia Scrubbing Plants 248
6.2.1 Outline 248
6.2.2 Ogishima Plant 248
6.2.3 Fukuyama Plant 254
6.2.4 Evaluation 255
6.3 Nishinagoya Plant, Chubu Electric (Wellman-MKK Process) 256
6.3.1 Outline 256
6.3.2 Sulfur Balance 256

CONTENTS (Continued)

6.3.3 Performance and Cost 259

6.3.4 Evaluation 261

6.4 Chiba Plant, Idemitsu Kosan (Mistui-Chemico Magnesium Process 262

6.4.1 Process Description 262

6.4.2 Performance 264

6.4.3 Evaluation 266

6.5 Other Major Regenerable Processes 266

6.5.1 Sodium Scrubbing By-Producing Sodium Sulfite 266

6.5.2 Shell Copper Oxide Process 267

6.5.3 Activated Carbon Processes 268

6.5.4 Ammonia Scrubbing by Ube Industries 269

7. SIMULTANEOUS REMOVAL OF SO_x AND NO_x..... 271

7.1 Outline 271

7.1.1 Problems with NO_x and SO_x Removal Processes 271

7.1.2 Comparison of Simultaneous and Combined Removal Processes 272

7.2 Dry Simultaneous Removal Using Activated Carbon 275

7.2.1 Reactions of Activated Carbon..... 275

7.2.2 Unitika Activated Carbon Process..... 278

7.2.3 Activated Carbon Process by Sumitomo Heavy Industries 281

7.3 Other Dry Processes for Simultaneous Removal... 284

7.3.1 Shell Copper Oxide Process..... 284

7.3.2 Ebara Electron Beam Radiation Process... 287

7.4 Wet Simultaneous Removal Processes 288

7.4.1 Outline 288

7.4.2 Oxidation Reduction Process 290

7.4.3 Reduction Processes 293

7.5 Summary - Applicability of Simultaneous Removal Processes 297

REFERENCES 300

FIGURES

Number		Page
1-1	Fuel mix required for a desired increase in electrical generation capacity	3
1-2	Sulfur input in Japan	9
1-3	Ambient SO_2 concentration in major industrial and urban areas	10
1-4	Sulfur in fuel oil allowed by the total mass regulations (for existing plants)	15
1-5	SO_2 and SO_3 in heavy oil combustion gas (O_2 1-2%)	19
1-6	SO_2 and SO_3 in flue gas (heavy oil, S=1-3%)	19
1-7	SO_3 and dust in flue gas (heavy oil, S=1-3%)	20
1-8	Schematic figure of SO_3 formation in heavy oil combustion gas (SO_2 1,000 ppm, O_2 1%)	21
1-9	Relative humidity and oxidation of SO_2 to sulfate (June-July, 1975)	22
2-1	Simplified flow sheet of Flexicoking process	36
2-2	Material balance of crude oil treatments including Flexicoking	38
2-3	Flow sheet of Eureka process	39
2-4	Flow sheet of Cherry process	42
2-5	Flow sheet of coal-residual oil hybrid gasification	44
2-6	Flow sheet of low calorific coal gasification	48
2-7	Flow sheet of solvolysis liquefaction	52
2-8	Flow sheet of molten salt lime slurry process	54
3-1	Production capacity of desulfurization	69
3-2	Price of by-products	69
3-3	Demand for and supply of gypsum	71
3-4	Relationship of the chloride concentration in the purge stream to the purge rate and the chloride content of the fuel (250 MW boiler, 1,500 ppm SO_2, 10% moisture in by-product gypsum)	76

FIGURES (Continued)

Number		Page
3-5	O_2 and Cl concentrations in solution and stress corrosion	76
3-6	Improved types of mist eliminators	79
3-7	Gas velocity and pressure drop	80
3-8	Gas velocity and mist collection	81
3-9	Gas velocity and acceptable mist load	81
3-10	Pilot plant of Ljungstrom heat exchanger	85
3-11	Deposits on elements in the Ljungstrom heat exchanger	86
3-12	Bypass systems (ESP: Electrostatic precipitator, FGD: Flue gas desulfurization, F: Fan)	91
3-13	Costs of fuels and desulfurization (with 3% S oil) ($1=¥250, Aug., 1977)	99
4-1	Typical flow sheet of wet lime/limestone gypsum process	105
4-2	Comparison of gypsum circulation system (Japan) and unsaturated mode lime system (U.S.)	108
4-3	Relationship of inlet SO_2 concentration and operability of FGD (lime/limestone process)	113
4-4	Flow sheet of Takasago plant, EPDC (No. 2 unit)	118
4-5	Hourly change of operation load (Takasago plant, EPDC)	120
4-6	Flow sheet of Isogo plant, EPDC	127
4-7	Flow sheet of Takehara plant, EPDC	135
4-8	Flow sheet of Matsushima plant, EPDC	141
4-9	Flow sheet of Owase-Mita plant, Chubu Electric	144
4-10	Characteristic curves with perforated plates	155
4-11	Flow sheet of Moretana process (Kashima plant, Sumitomo Metal)	157
4-12	Flow sheet of Takaoka plant, Takaoka Kyodo Power	159
4-13	Flow sheet of Tamashima plant, Chugoku Electric	165
4-14	Jet bubbling reactor	169
4-15	Schematic drawing of gas sparger	169
4-16	Effect of gas flow rate on penetration length	170

FIGURES (Continued)

Number		Page
4-17	SO_2 removal vs. pH of absorbent	170
4-18	Pressure drop and SO_2 removal efficiency	171
4-19	Liquid flow pattern in jet bubbling reactor	172
4-20	Effect of pH on limestone utilization	173
4-21	Effect of residence time on limestone utilization	173
4-22	Pilot plant process flow diagram	175
4-23	Process flow diagram of prototype plant	178
5-1	pH of scrubber liquor and performance	187
5-2	Flow sheet of CT 101 process	190
5-3	Double-cylinder type reactor	191
5-4	Maximum and minimum SO_2 removal efficiencies vs. H_2SO_4 concentration, as determined by test runs at a commercial plant	192
5-5	Operation load of Fukui plant	197
5-6	Bypass system of Fukui plant	197
5-7	Flow sheet of Ichihara (Chiba) plant, Showa Denka	202
5-8	Flow sheet of Kureha-Kawasaki process	205
5-9	Flow sheet of Dowa process	212
5-10	Flow sheet of Japan Exlan plant	218
5-11	Absorbent pH and SO_2 removal	222
5-12	Relation between L/G ratio and SO_2 removal	222
5-13	Solubility of $Ca(OH)_2$ in $CaCl_2$ solution	227
5-14	Vapor pressure on $CaCl_2$ solution	227
5-15	$CaSO_4$ solubility in $CaCl_2$ solution	227
5-16	Oxidation rate of $CaSO_3$ to $CaSO_4$ (at optimum pH)	227
5-17	Flow sheet of Kobe steel process	229
5-18	Flow sheet of Kurabo ammonium sulfate-gypsum process	235
5-19	Flow sheet of Nippon Kokan ammonia-lime process	237
5-20	Simplified flow sheet of Kureha sodium acetate lime process	239
6-1	Flue gas treatment system (Ogishima plant, Nippon Kokan)	249

FIGURES (Continued)

Number		Page
6-2	SO_2 and NH_3 absorption system (Ogishima plant, Nippon Kokan)	250
6-3	Scrubber and liquor flow (Ogishima plant, Nippon Kokan)	252
6-4	Flow sheet of the Wellman-MKK process (Nishinagoya Station, Chubu Electric Power)	257
6-5	Sulfur balance of FGD system at Nishinagoya, Chubu Electric (Wellman-MKK process)	258
6-6	Flow sheet of Chiba plant, Idemitsu Kokan (Mitsui-Chemico magnesium process)	263
7-1	Combined and simultaneous removal systems - control strategy options (numbers show temperatures, °C)	273
7-2	Efficiency of simultaneous removal by activated carbon and ammonia	277
7-3	Flow sheet of Unitika process (Uji plant)	279
7-4	Flow sheet of Sumitomo activated carbon process	282
7-5	Performance of Shell FGD reactor at SYS. Instantaneous SO_2 and NO_x slip (92)	286
7-6	Simultaneous removal by electron beam radiator	287
7-7	Simplified flow sheet of wet-limestone simultaneous removal process (oxidation reduction process)	291
7-8	Flow sheet of Chisso process (CEC process)	295
7-9	Flow sheet of Kureha process	296
7-10	Gas composition and suitable processes	298

TABLES

Number		Page
1-1	JAPAN'S ENERGY SUPPLY	2
1-2	1977 BUDGET FOR SUNSHINE PROJECT	6
1-3	COAL GASIFICATION AND LIQUEFACTION RESEARCH AND DEVELOPMENT PROGRAMS	7
1-4	CONSUMPTION AND SULFUR CONTENT OF HEAVY OIL	9
1-5	AMBIENT SO_x STANDARDS	10
1-6	VALUES OF K APPLICABLE TO LOCATIONS IN JAPAN	11
1-7	RELATION OF K VALUE TO MAXIMUM GROUND-LEVEL CONCENTRATION OF SO_2	12
1-8	TAX RATE ON SO_x EMISSION	16
1-9	AMBIENT CONCENTRATIONS OF SULFATE AND VANADIUM (V) IN MAJOR CITIES IN JAPAN	18
1-10	NO_2 AMBIENT STANDARDS	25
1-11	NO_x EMISSION STANDARDS FOR STATIONARY SOURCES	26
1-12	NO_x EMISSION STANDARDS FOR EXISTING OIL-FIRED BOILERS WITH AND WITHOUT FGD SYSTEM	27
1-13	INVESTMENT BY INDUSTRY FOR POLLUTION CONTROL (I)	28
1-14	INVESTMENT BY INDUSTRY FOR POLLUTION CONTROL (II)	29
2-1	CAPACITY OF HEAVY OIL DESULFURIZATION	33
2-2	NEW HDS PLANTS	34
2-3	TYPICAL PRODUCT PATTERNS	40
2-4	ECONOMIC BALANCE OF RESIDUAL OIL CRACKING PROCESS	40
2-5	S AND N CONTENTS OF PRODUCT OIL FROM THE CHERRY PROCESS	43
2-6	PRELIMINARY RESULTS OF PLASMA GASIFICATION	53
3-1	NUMBERS AND CAPACITIES OF PLANTS BY MAJOR CONSTRUCTORS (OPERATIONAL AT END OF 1977)	59

TABLES (Continued)

Number		Page
3-2	CAPACITIES OF STEAM POWER GENERATION AND FGD OF POWER COMPANIES	61
3-3	FGD PLANTS OF POWER COMPANIES (I)	63
3-4	FGD PLANTS OF POWER COMPANIES (II)	64
3-5	SO_2 REMOVAL INSTALLATIONS FOR WASTE GAS FROM IRON-ORE SINTERING MACHINES	66
3-6	MAJOR FGD PLANTS OF LEADING NONFERROUS SMELTERS	68
3-7	PROPERTIES OF FGD GYPSUM	73
3-8	WASTEWATER FROM FGD SYSTEMS	75
3-9	TEST RESULTS OF LJUNGSTROM HEAT EXCHANGERS	86
3-10	EXAMPLES OF PARTICULATE CONTENT OF THE LJUNGSTROM TEST FLUE GAS	87
3-11	INVESTMENT AND ANNUALIZED COSTS FOR REHEATING	88
3-12	OPERATION HOURS AND FGD OPERABILITY IN RECENT ONE YEAR*	93
3-13	LABOR REQUIREMENTS OF FGD PLANTS	95
3-14	FGD PLANT COSTS IN BATTERY LIMITS	96
4-1	WET LIME/LIMESTONE PROCESS PLANTS BY MHI PROCESS	101
4-2	WET LIME LIMESTONE PROCESS PLANTS USING SCRUBBERS DEVELOPED IN U.S.	102
4-3	WET LIME LIMESTONE PROCESS PLANTS BY OTHER PROCESSES	103
4-4	OPERATION DATA OF MAJOR LIME/LIMESTONE PROCESS PLANTS	106
4-5	FGD PLANTS FOR COAL-FIRED BOILERS	115
4-6	SPECIFICATIONS OF FGD UNITS	119
4-7	PERFORMANCE OF THE NO. 1 UNIT, TAKASAGO PLANT	121
4-8	PERFORMANCE OF THE NO. 2 UNIT, TAKASAGO PLANT	123
4-9	PLANT SPECIFICATIONS	129
4-10	MAIN EQUIPMENT	130
4-11	BOILERS AT TAKEHARA STATION	133
4-12	AIR POLLUTION CONTROL FACILITY	134
4-13	OPERATION HOURS OF OMUTA PLANT MITSUI ALUMINUM	139

TABLES (Continued)

Number		Page
4-14	YEARLY OPERATION OF OWASE-MITA NO. 1 BOILER AND FGD UNIT	147
4-15	YEARLY OPERATION OF OWASE-MITA NO. 2 BOILER AND FGD UNIT	148
4-16	REGULATIONS FOR SHIMONOSEKI STATION	151
4-17	MAIN COMPONENTS OF SHIMONOSEKI PLANT	152
4-18	OPERATION HOURS (KASHIMA PLANT)	160
4-19	MAJOR COMPONENTS OF THE PLANT FOR TAKAOKA KYODO POWER CO., LTD.	161
4-20	OPERATION HOURS OF TAMASHIMA NO. 3 PLANT	164
4-21	OPERATION HOURS OF KARATSU PLANT	167
4-22	MAJOR EQUIPMENT OF PILOT PLANT	176
4-23	TYPICAL PILOT PLANT OPERATING DATA	177
4-24	GYPSUM QUALITY	177
4-25	COSTS FOR 60 MW UNIT	179
4-26	CAPITAL AND OPERATION COSTS FOR 200 MW UNIT	180
5-1	INDIRECT AND MODIFIED LIME/LIMESTONE PROCESS INSTALLATIONS	182
5-2	OPERATION DATA OF INDIRECT AND MODIFIED LIME/ LIMESTONE PROCESS PLANTS	184
5-3	UTILITY BOILER AND FGD PERFORMANCE (1975-AUG. 1977)	193
5-4	OPERATION HOURS OF FUKUI PLANT, HOKURIKU ELECTRIC	195
5-5	TROUBLES AT THE FUKUI PLANT AND REMEDIES	196
5-6	TYPICAL ECONOMIC DATA OF COMMERCIAL PLANTS	198
5-7	OPERATION HOURS OF ICHIHARA PLANT, SHOWA DENKO	203
5-8	FGD COST (ICHIHARA PLANT)	204
5-9	OPERATION HOURS OF SAKAIDE NO. 3 PLANT	206
5-10	RESULTS OF FGD OPERATION IN ANAN POWER STATION	208
5-11	OPERATION DATA AND COSTS (ANAN PLANT, 1977)	209
5-12	OPERATION HOURS OF NAIKAI PLANT (DOWA PROCESS)	215
5-13	COST FIGURES (TAMANO PLANT, NAIKAI)	216

TABLES (Continued)

Number		Page
5-14	MAJOR EQUIPMENT LIST (SAIDAIJI PLANT, JAPAN EXLAN CO.)	220
5-15	PERFORMANCE OF OKAZAKI PLANT, UNITIKA	224
5-16	OPERATION OF AMAGASAKI PLANT, KOBE STEEL	230
5-17	OPERATION HOURS OF FUNAMACHI PLANT, NAKAYAMA STEEL	232
6-1	FGD INSTALLATIONS BY-PRODUCING H_2SO_4, S AND $(NH_4)_2SO_4$	242
6-2	OPERATION DATA OF REGENERABLE PROCESS PLANTS	249
6-3	OPERATION HOURS SINCE START-UP	253
6-4	OPERATION PARAMETERS OF FUKUYAMA PLANT	255
6-5	YEARLY OPERATION OF NISHINAGOYA NO. 1 BOILER AND FGD PLANT	260
6-6	OPERATION HOURS (CHIBA PLANT, IDEMITSU KOSAN. FGD TREATS FLUE GAS FROM BOILER AND CLAUS FURNACE)	265
7-1	CLASSIFICATION OF SIMULTANEOUS REMOVAL PROCESSES	274
7-2	EFFECT OF ADDITION OF BASE METAL COMPOUNDS TO CARBON ON NO_x REDUCTION EFFICIENCY	277
7-3	ESTIMATED COST FOR SIMULTANEOUS REMOVAL BY ACTIVATED CARBON	281
7-4	MAJOR WET SIMULTANEOUS REMOVAL PROCESSES	289

CONVERSION FACTORS AND ABBREVIATIONS

CONVERSION FACTORS

The metric system is used in this report. Following are some factors for conversion between metric and English systems:

1 m (meter)	=	3.3 feet
1 m^3 (cubic meter)	=	35.3 cubic feet
1 t (metric ton)	=	1.1 short tons
1 kg (kilogram)	=	2.2 pounds
1 liter	=	0.26 gallon
1 kl (kiloliter)	=	6.19 barrels

The capacity of flue gas desulfurization plants is expressed in Nm^3/hr (normal cubic meters per hour)

1 Nm^3/hr = 0.59 standard cubic foot per minute

L/G ratio (liquid/gas ratio) is expressed in liters/Nm^3.

1 liter/Nm^3 = 7.4 gallons/thousand standard cubic feet

ABBREVIATIONS

FGD	= Flue gas desulfurization
HDS	= Hydrodesulfurization
BPSD	= Barrels per stream day
MW	= Megawatts
L/G	= Liquid/gas ratio (see above)
Nm^3/hr	= Normal cubic meters per hour

YEN - DOLLAR CONVERSION

The Yen/Dollar exchange rate has undergone considerable change in recent years. When using the cost data in this report the following conversions should be used:

¥/$	Year
292	1974
297	1975
297	1976
267	1977
238	1978 (1st quarter)

SECTION 1

ENERGY AND ENVIRONMENT

1.1 ENERGY SUPPLY OF JAPAN

For more than 70% of its total energy, Japan now depends upon imported oil. Most of this comes from the Middle East (Table 1-1). Demand for oil, which was 288 million kiloliters in 1975, may exceed 500 million in 1985. It will be difficult to obtain that much because of the oil supply and demand situation in the world. Japan's per capita energy consumption is less than one-half the U.S. and not much energy saving can be expected. Therefore, it is necessary to increase the use of energy sources other than oil.

Construction of nuclear power stations in Japan has been delayed under circumstances similar to those in the U.S. and West Germany. Coal mines in Japan are small and deep underground. Dependence on imported LNG and coal, particularly the latter, will have to be increased.

In the early 1960s Japan mined over 50 million tons of domestic coal yearly. As oil imports increased, coal production dropped below 20 million tons for economic and environmental reasons. Although Japan has imported over 60 million tons of coal yearly, the entire quantity has gone to coke production for the steel industry. Much additional coal will be required for electric power generation, as shown in Figure 1-1. An increase in coal consumption will necessitate extensive measures

TABLE 1-1. JAPAN'S ENERGY SUPPLY

	1975		1985				1990	
			Case A*		Case B†		Case B†	
	Amount	(%)	Amount	(%)	Amount	(%)	Amount	(%)
Hydro power (10^6 kW)	24.9	(5.8)	39.0	(3.3)	41.0	(3.9)	51.0	(3.9)
Conventional	17.8		19.5		22.5		26.5	
Pumped storage	7.1		19.5		18.5		24.5	
Geothermal (10^6 kW)	0.05	(0.0)	0.5	(0.1)	1.0	(0.3)	3.0	(0.7)
Domestic oil, gas (10^6 kl)	3.5	(0.9)	8.0	(1.2)	11.0	(1.7)	14.0	(1.7)
Domestic coal (10^6 t)	18.6	(3.3)	20.0	(2.0)	20.0	(2.1)	20.0	(1.8)
Atomic energy (10^6 kW)	6.62	(1.7)	26.0	(5.4)	33.0	(7.4)	60.0	(11.2)
LNG (10^6 t)	5.06	(1.8)	24.0	(4.9)	30.0	(6.4)	44.0	(7.7)
Imported coal (10^6 t)	62.3	(13.1)	93.0	(10.7)	102.0	(12.4)	144.0	(14.1)
for steel industry	61.8		87.0		86.0		104.0	
for fuel	0.5		6.0		16.0		40.0	-
New energy (10^6 kl)	0.0	(0.0)	0.0	(0.0)	2.3	(0.4)	13.0	(1.6)
Imported oil (10^6 kl)	288.0	(73.4)	505.0	(72.2)	432.0	(65.5)	452.0	(57.1)
Total (10^6 kl equivalent)	390.0	(100.0)	700.0	(100.0)	660.0	(100.0)	792.0	(100.0)

* When no special effort is made.

† With efforts to save energy and develop energy sources other than oil.

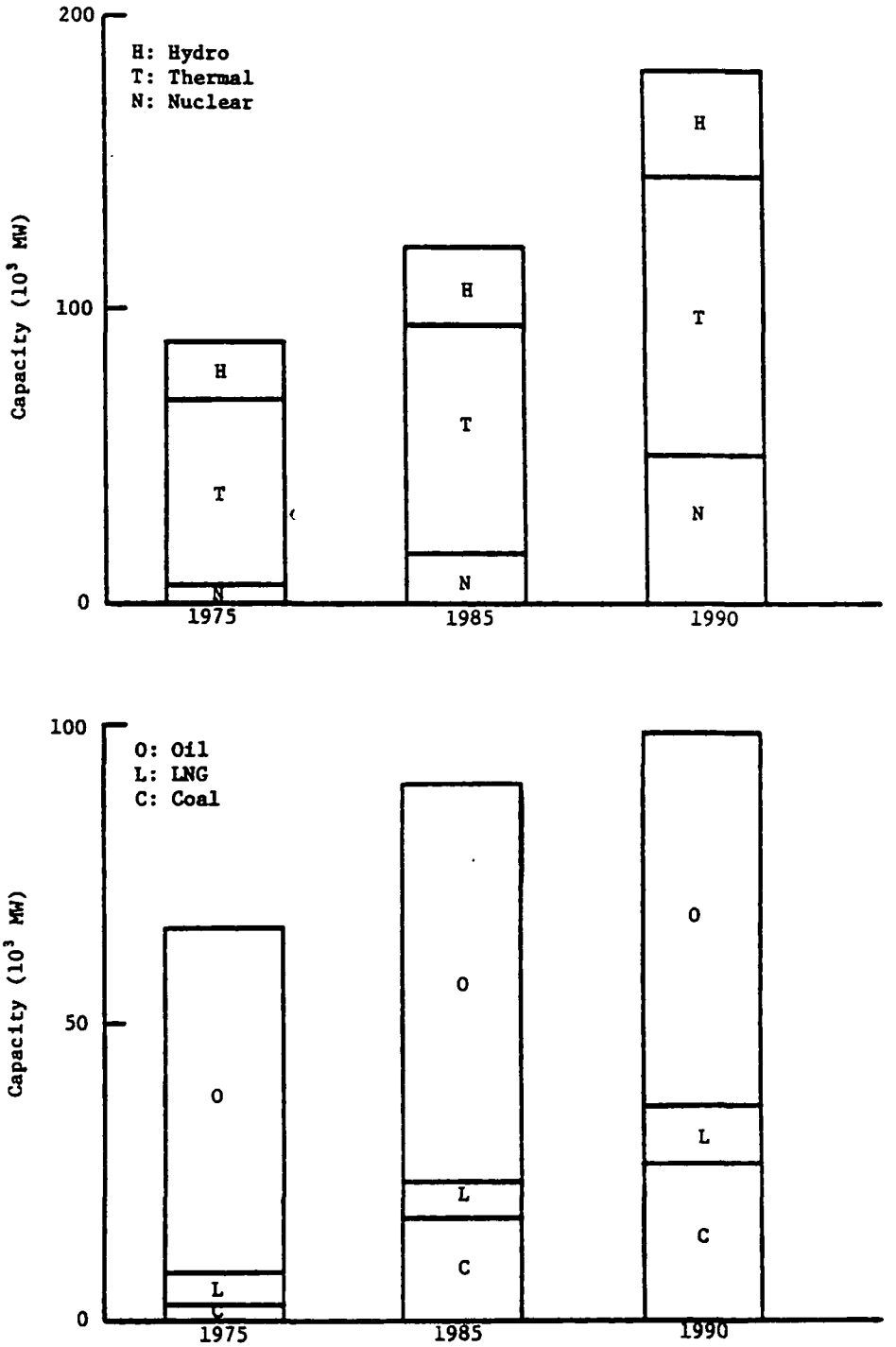

Figure 1-1. Fuel mix required for a desired increase in electrical generation capacity.

for environmental protection in Japan, where most regions available for industry are already fairly densely populated.

1.2 SUNSHINE PROJECT[1]

The Sunshine Project was started in 1974 by the Ministry of International Trade and Industry, with a view to securing energy on a long-term, stable basis. The aim is to supply clean energy to meet a considerable portion of the future demand for energy by promoting research and development work on new energy techniques.

The kinds of new energy technology to be developed on a priority basis to attain the goals of the Sunshine Project are solar energy technology, geothermal energy technology, technology for the gasification and liquefaction of coal, and hydrogen energy technology. Specific areas of interest are listed below:

1) Solar Energy Technology

- Technology for solar energy power generation systems.
  - Technology for solar thermal power generation system.
  - Technology for photovoltaic conversion system.
  - Others
- Technology for solar cooling and heating and solar hot water supply systems.
- Technology for new applications of solar energy.

2) Geothermal Energy Technology

- Technology for exploration and extraction of geothermal energy.
- Technology for power generation utilizing hot water.
- Technology for a volcanic power generating system.
- Technology for multipurpose utilization of geothermal energy.
- Technology for environmental preservation.

3) Coal Gasification and Liquefaction Technology

- Coal gasification technology.
  - Technology for manufacturing synthetic natural gas.
  - Technology for gasification power generation.
  - Technology for plasma gasification.
- Coal liquefaction technology.

4) Hydrogen Energy Technology

- Techniques for manufacturing hydrogen.
- Techniques for transporting and storing hydrogen.
- Techniques for utilizing hydrogen.
- Techniques for safe handling of hydrogen.
- Hydrogen energy system.

The budget for each project since 1974 and the work plans for 1977 are shown in Table 1-2. Projected plans for coal gasification and liquefaction are shown in Table 1-3.

TABLE 1-2. 1977 BUDGET FOR SUNSHINE PROJECT[1]
(100 million yen)

Projects	1974	1975	1976	1977	Work plans for FY1977
Solar energy	8.7	11.0	14.6	14.9	Conceptual design of 1,000 kW solar power generation plant (2 types) • Basic experiments of solar thermal power generation • System operation of solar house • New material exploitation • Experiments on photovoltaic power generation
Geothermal energy	5.6	11.4	15.5	15.6	Operation of 1,000 kW binary cycle power generation plant (2 types) • National survey on geothermal energy resources* • Feasibility study of volcanic power generation • R & D on new exploration methods • Study of reinjection mechanism
Coal gasification and liquefaction	2.6	6.7	7.2	7.4	Conceptual design of 7,000 m^3/day gasification plant Operation of coal liquefaction pilot plant (Solvolysis method) • Experiment on development of coal gasification processes • 5 t/day pilot plant operation for development of low-Btu gasification process† • Basic study of plasma gasification • Basic research on coal liquefaction
Hydrogen energy	3.3	4.8	5.2	5.2	• Manufacturing of hydrogen • Feasibility study on new utilization of hydrogen
Supporting research and management	2.4	3.2	3.7	5.6	• Total energy system • Exploitation of seeds technology • Management of R & D
Total budget	22.7	37.0	46.1	48.7	

*...Nationwide Basic Study completed in 1965, and now being followed up by Agency of Natural Resources and Energy.

†...Financed by the Special Account for Coal and Petroleum, which amount is excluded from this chart.

TABLE 1-3. COAL GASIFICATION AND LIQUEFACTION RESEARCH AND DEVELOPMENT PROGRAMS[1]

Research items	FY 1974-1980 Term - 7 yrs.	FY 1981-1985 Term - 5 yrs.	FY 1986-1990 Term - 5 yrs.	FY 1990-1995 Term - 5 yrs.
Coal gasification				
1) Conversion into high calorie gas				
• Fundamental research	Feasibility study			
• Gasification plant		7,000 m^3/day	50,000 m^3/day	350,000 m^3/day; 1,000,000 m^3/day →
2) Conversion into low calorie gas & power generation				
• Gasification plant for power generation	5 t/day; 40 t/day	250 t/day; 2,000 t/day →		
• Gas/steam turbine combined power plant		20,000 kW combined cycle power plant system →		
3) Plasma gasification				
• Fundamental research				
• Plasma gasification device		2,000 kW furnace	5,000 kW furnace →	
Coal liquefaction				
1) Fundamental research				
2) Coal refining plant	2 t/day	30 t/day	300 t/day	3,000 t/day →
3) Liquefaction plant	100 bbl/day	1,000 bbl/day	10,000 bbl/day →	

Japan has certain limitations in its search for new, clean energy sources. The small amount of land space available limits the use of solar energy. Geothermal energy may be more promising, but environmental pollution and corrosion of equipment may present problems. Thermochemical studies of the production of hydrogen from water indicate that nuclear energy will have to be relied on to supply the energy required for hydrogen production. Coal treating is the most practical technology, but most of Japan's coal has to be imported.

1.3 SULFUR INPUT IN JAPAN

Figure 1-2 shows yearly sulfur inputs since 1966. In 1976, 3.5 million tons of sulfur were derived from imported oil, 1.7 million tons from metal sulfides, and 1.3 million tons from other sources. Virtually all of the sulfur from the metal sulfides is converted to sulfuric acid (amounting to 7 million tons yearly). Therefore, the sulfur in oil is the major source of SO_2. Efforts have been made since 1966 for desulfurization of both oil and flue gas. Table 1-4 shows that the average sulfur content of heavy oil, the major fuel in Japan, has decreased considerably. The sulfur content of heavy oil for electric power plants has been less than the average for total heavy oil because more stringent regulations have been applied to larger consumers. Most power plants burn oil with less than 0.3% sulfur, while others use oil with more than 1% sulfur and apply flue gas desulfurization.

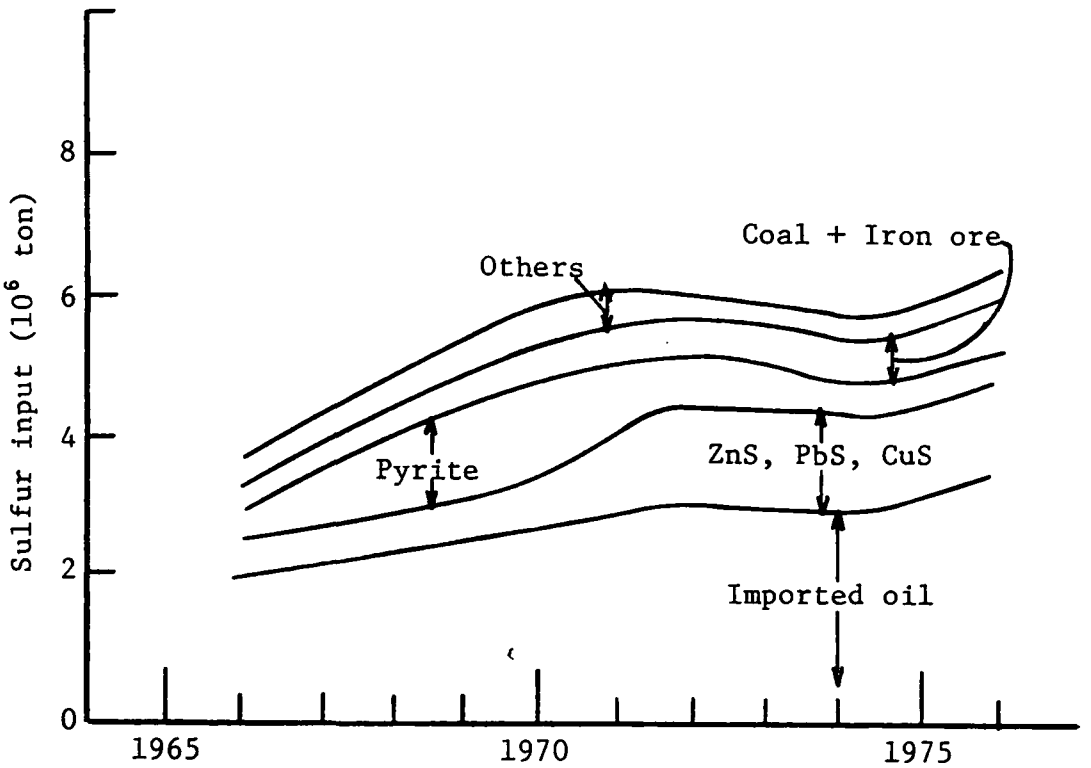

Figure 1-2. Sulfur input in Japan.

TABLE 1-4. CONSUMPTION AND SULFUR CONTENT OF HEAVY OIL

	Grade C heavy oil				Total heavy oil	
	For electric power		Total			
	Amount (10^6 kl)	S (%)	Amount (10^6 kl)	S (%)	Amount (10^6 kl)	S (%)
1968	19.2	2.02	62.3	2.49	79.3	2.32
1969	24.0	1.89	65.0	2.18	82.6	2.06
1970	29.2	1.66	83.2	2.05	105.8	1.93
1971	30.8	1.47	85.8	1.86	109.3	1.74
1972	33.0	1.22	91.6	1.66	118.2	1.56
1973	34.9	1.01	92.4	1.53	112.9	1.43
1974	33.1	1.00	91.4	1.52	121.2	1.43
1975	31.5	0.99	85.4	1.52	114.8	1.42
1976	33.9	0.99	90.5	1.51	120.7	1.41

1.4 SO_x STANDARDS AND REGULATIONS

1.4.1 Ambient Standard

The current Japanese SO_x ambient standard requires that the hourly average should not exceed 0.1 ppm and the daily average 0.04 ppm. The standard is much more stringent than that in the U.S.A. and West Germany (Table 1-5). The stringent standard has been almost met as shown in Figure 1-3.

TABLE 1-5. AMBIENT SO_x STANDARDS
(Converted to ppm)

	Hourly	Daily	Yearly
Japan	0.1	0.04	(0.016)
United States			0.03
West Germany			0.05

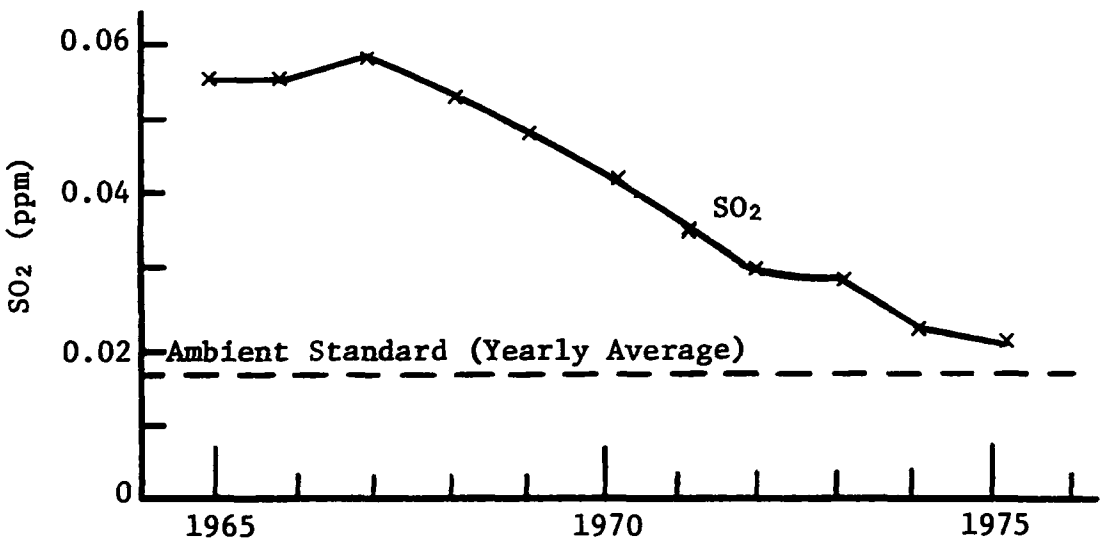

Figure 1-3. Ambient SO_2 concentration in major industrial and urban areas. (Average for 15 stations)

1.4.2 Emission Standards

The reduction in the ambient SO_2 concentration illustrated in Figure 1-3 is a result of emission standards employed by the Japanese Central Government's Environment Agency. The standards are keyed to local air quality and environmental conditions using what is known as a "K-value" system. Under this system, the specific allowable quantity of SO_x emissions for each emitting source within a given geographical area is calculated by the following equation:

$$Q = K \times 10^{-3} He^2 \qquad (1\text{-}1)$$

Q: Allowable emissions of sulfur oxides, Nm^3/hr

K: The constant specified for each of the geographical regions as shown in Table 1-6

He: Effective height of stack, meters (He = Actual stack height plus plume ascent distance)

TABLE 1-6. VALUES OF K APPLICABLE TO LOCATIONS IN JAPAN (For Existing Plants)

3.0	3.5	4.0-4.5	6.0-7.0	11.5-14.5
Tokyo	Chiba	Sapporo	Hachinohe	Hakodate
Yokohama	Fuji	Kashima	Sendai	Miyako
Kawasaki	Handa	Shimizu	Niigata	Mobara
Yokkaichi	Himeji	Tokuyama	Okayama	Sasebo
Osaka	Mizushima	Omuta	Fukuoka	Kagoshima

(For New Plants)

1.17	1.75	2.34
Tokyo, Yokohama	Chiba, Fuji	Kashima, Omuta
Kawasaki, Nagoya	Kitakyushu	Ube, Oita
Yokkaichi, Osaka	Handa, Himeji	Shimizu, Kyoto

The relationship between the value of K and the maximum ground-level concentration of SO_2 is shown in Table 1-7. A given K-value results in the ground-level SO_2 concentration shown in the table.

TABLE 1-7. RELATION OF K VALUE TO MAXIMUM GROUND-LEVEL CONCENTRATION OF SO_2 (ppm)

K	1.17	1.75	2.34	3.50	4.67	8.76	14.6
SO_2	0.002	0.003	0.004	0.006	0.008	0.015	0.025

For example, for the following conditions

He = 450m
K = 1.17

the allowable sulfur emissions are calculated to be 237 Nm^3/hr. A 500 MW boiler typically emits flue gas at a rate of 1.5×10^6 Nm^3/hr. The SO_x concentration that corresponds to this flow rate is 158 ppm. This corresponds to 0.3% sulfur fuel since these fuels typically emit about 150 ppm of SO_x. Therefore, in order to meet the emission standard, a new plant in the Tokyo or Osaka area with a capacity of 500 MW and an effective stack height of 450 meters (actual stack height of 200 meters) cannot use oil with a sulfur content greater than 0.3 percent. This emission standard, however, has proven insufficient to attain the ambient standard in certain districts. More stringent emission regulations have recently been applied to those districts. These are the total mass regulations. In other districts more stringent regulations have been applied by agreement with local authorities.

Total Mass Regulation of SO_x--

With the aim of attaining the ambient standard by March 1978, the Japanese central government promulgated a new regulation in November 1974 to restrict the total mass of SO_2 emissions in the following eleven polluted areas: 1) Tokyo, 2) Chiba, 3) Yokohama, Kawasaki, 4) Fuji, 5) Nagoya, 6) Handa, 7) Yokkaichi, 8) Osaka, Sakai, 9) Kobe, Amagasaki, 10) Kurashiki, Mizushima, and 11) Kitakyushu. Later 13 more areas were added. The new regulation applies to plants using from 0.1 to 1.0 kiloliter of oil per hour (0.4 to 4.0 MW equivalent). Within this range, the specific minimum consumption rate for regulation is assigned to each prefecture by the governor. The amount of allowable SO_x is calculated from one of the following formulas, to be selected by each prefecture:

$$Q = a \times W^b \qquad (1\text{-}2)$$

Q: Amount of allowable SO_x

a: A constant to ensure SO_x abatement

W: Rate of fuel consumption by each plant

b: A constant between 1.00 and 0.80 to be selected by the prefectural governor

$$Q = Q_o \times C_m/C_{m_o} \qquad (1\text{-}3)$$

Q: Amount of allowable SO_x

Q_o: Amount of SO_x being emitted

C_m: Maximum ground-level concentration to ensure SO_x abatement

C_{m_o}: Maximum ground-level concentration due to each plant

As an example, the regulations of Kanagawa Prefecture, in which Yokohama and Kawasaki cities are located, are shown below. Equations 1-4a (applied to the most polluted districts

in Yokohama and Kawasaki) and 1-4b (applied to the remainder of Kanagawa) are employed for plants that consume more than 1 kl of oil per hour.

$$Q = 1.5\ W^{0.865} + 0.5\ W_i^{0.865} \qquad (1\text{-}4a)$$

$$Q = 2.5\ W^{0.865} + 0.8\ W_i^{0.865} \qquad (1\text{-}4b)$$

Q: Amount of allowable SO_x, Nm^3/hr

W: Rate of fuel consumption by existing plants, kl/hr

W_i: Rate of fuel consumption by new plants, kl/hr

The relationship between fuel consumption by existing plants and the allowable sulfur content of fuel oil for each district is shown in Figure 1-4. A 450 MW plant in the Yokohama or Kawasaki district is allowed to use oil with a maximum of 0.117% sulfur. If the plant has two 225 MW boilers and one of them uses LNG that has no sulfur, however, the other unit may use oil with 0.248% sulfur.

Fuels with much lower sulfur content are required for new plants to be constructed in these districts; the stringent regulations virtually prevent the construction of new plants in the area. Plants which use fuel with higher sulfur content have to install FGD units to reduce SO_x emission to the regulated amount.

Agreement With Local Authorities--

For regions where total mass regulations have not been applied, SO_x emission is controlled by the K-value system of the central government (Equation 1-1). However, most larger plants, particularly new ones, are controlled by agreements with

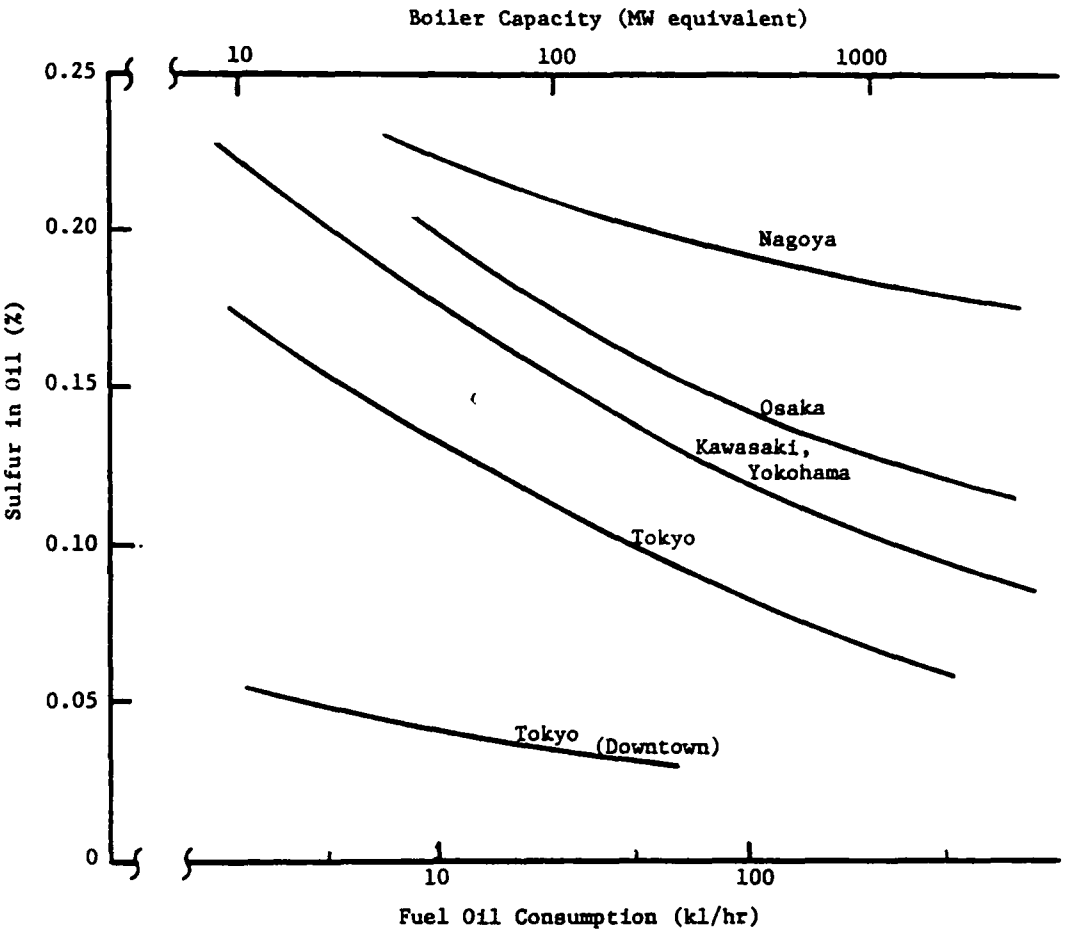

Figure 1-4. Sulfur in fuel oil allowed by the total mass regulations (for existing plants).

prefectural or city authorities for pollution prevention. The controls by these agreements are usually much more stringent than those by the central government. For example, many power plants, even though they are distant from large cities, have to use an oil with below 0.3% sulfur or apply FGD to attain the SO_x emission levels mandated by local authorities.

1.4.3 SO_x Emission Tax

An SO_x emission tax system has been in force since 1974. Plants in polluted regions emitting more than 5,000 Nm^3/hr of flue gas and those in other regions emitting more than 10,000 Nm^3/hr have to pay the tax even though they may have satisfied the emission regulations. The tax, based on the amount of SO_x emitted, is charged at a rate shown in Table 1-8.

TABLE 1-8. TAX RATE ON SO_x EMISSION $\left(\frac{\text{Yen}}{Nm^3 \text{ of } SO_x}\right)$

	Polluted regions				Other regions
	Osaka, etc. (A)	Tokyo, etc. (B)	Chiba, etc. (C)	Kitakyushu, etc. (D)	
1974			15.84		1.76
1975			37.31		8.59
1976			209.97		23.33
1977	536.63	381.31	344.98	306.65	42.59

The tax proceeds have been used in designated areas for the medical care of patients affected by air pollution. The number of such patients has continued to increase and is now approaching 20,000, although SO_x emission and ambient SO_x concentration have continued to decrease since 1967. As a result, the tax rate has increased remarkably. Several companies are now considering installing FGD plants even though they have

satisfied the regulations, because the resulting decrease in the tax may compensate for the FGD cost. Further SO_x reduction, however, may result in a further increase in the tax rate as long as the number of patients does not decrease.

The recent increase in the number of pollution victims is due largely to delayed medical examination. A large number of people are being examined by a limited number of designated doctors; a considerable number of people are still awaiting examination. This time lag makes it difficult to tell whether the number of true pollution victims is increasing or decreasing.

1.5 SO_2 AND SULFATE

1.5.1 Ambient Sulfate Concentration

In the U.S.A., sulfate particulates are considered by many as being much more hazardous to human health than gaseous SO_2 is. Sulfate particulates include sulfuric acid mists and fine solid particulates of sulfate compounds with ammonia, calcium, etc., and are often simply called sulfate.

The sulfate (SO_4^{2-}) concentrations in ambient air in 10 Japanese cities are shown in Table 1-9 together with vanadium concentrations. SO_x and vanadium (V) are mainly derived from heavy oil combustion. The table shows that concentrations of both sulfate and vanadium decreased by about a half in the four years beginning 1970. In the same period, average ambient SO_2 concentrations were also halved, from 0.043 ppm (113 $\mu g/Nm^3$) to 0.024 ppm (63 $\mu g/Nm^3$).

TABLE 1-9. AMBIENT CONCENTRATIONS OF SULFATE AND VANADIUM IN MAJOR CITIES IN JAPAN ($\mu g/Nm^3$)

City	1970		1972		1974	
	SO_4^{2-}	V	SO_4^{2-}	V	SO_4^{2-}	V
Sapporo	11.2	0.03	8.3	0.03	7.0	0.02
Ichihara	14.7	0.06	15.5	0.07	11.8	0.03
Tokyo	17.3	0.07	16.1	0.08	12.0	0.05
Kawasaki	56.0	0.27	24.0	0.14	16.8	0.05
Nagoya	22.0	0.09	25.0	0.12	16.7	0.06
Osaka	31.6	0.15	27.0	0.13	14.6	0.05
Amagasaki	30.3	0.10	18.8	0.11	12.6	0.05
Matsue	8.7	0.01	10.3	0.02	7.3	0.02
Ube	27.5	0.05	20.9	0.07	13.4	0.05
Kitakyushu	29.0	0.10	17.1	0.07	12.5	0.05
Average	24.8	0.09	18.3	0.08	12.5	0.04

Consumption of heavy oil during this period increased by about 30% while total sulfur in the heavy oil decreased by about 20%. This may mean that FGD contributed to the reduction of vanadium, which is contained in fly ash, as well as SO_2. A considerable portion of ambient sulfate is formed in the atmosphere from SO_2 with the help of vanadium, which acts as an oxidation catalyst. Some sulfuric acid mist is also formed within flue gas. Thus, although the removal ratio of sulfuric acid mist by FGD may not be high, the reduction of SO_2 and vanadium results in a decrease of atmospheric sulfate.

Formation of SO_3 and H_2SO_4 Mist in Flue Gas[2]--

Usually 2-5% of SO_x in heavy oil combustion flue gas (cooled to about 150°C) is in the form of SO_3 or H_2SO_4 mist (Figure 1-5). The SO_3 increases with oxygen concentration in the flue gas (Figure 1-6). Since SO_3 causes corrosion of

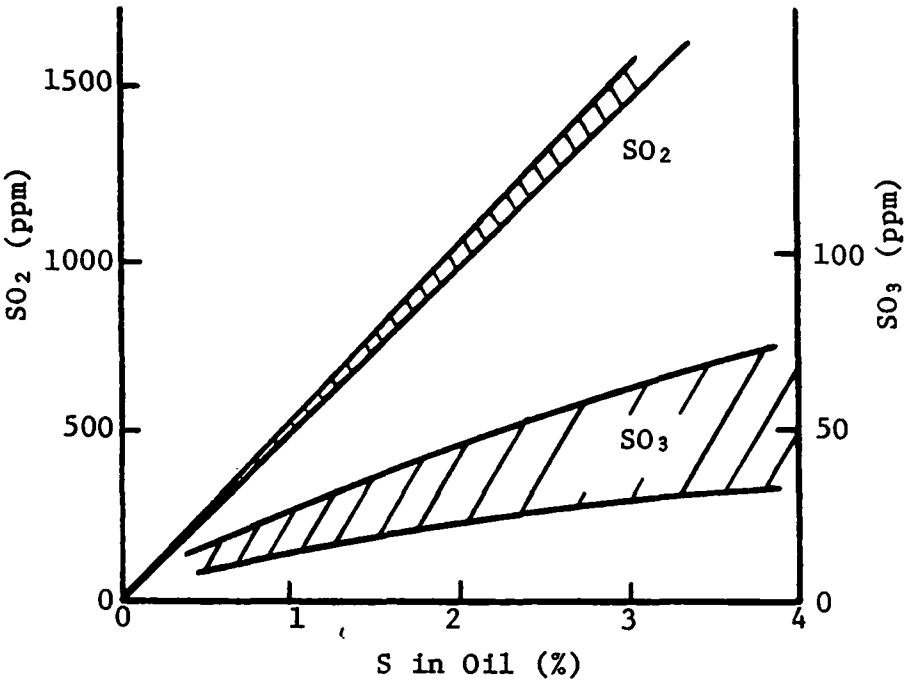

Figure 1-5. SO_2 and SO_3 in heavy oil combustion gas (O_2 1-2%)[2]

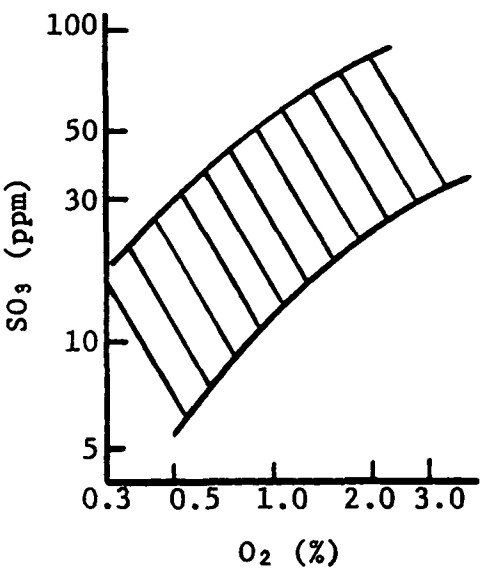

Figure 1-6. SO_2 and SO_3 in flue gas (heavy oil, S=1-3%).[2]

electrostatic precipitators, efforts have been made to decrease SO_3 by minimizing oxygen in combustion gas. Recent efforts for NO_x abatement by combustion control to reduce excess oxygen are also helpful in SO_3 abatement. Low-oxygen combustion, however, would increase particulates, as shown in Figure 1-7.

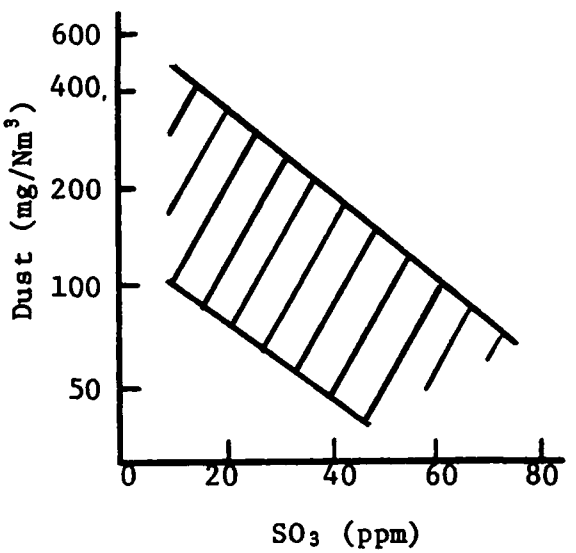

Figure 1-7. SO_3 and dust in flue gas (heavy oil, S=1-3%).[2]

Figure 1-8 schematically illustrates the formation of SO_3 in a gas containing SO_2 (1,000 ppm) and O_2 (1%) at different temperatures. Since the reaction of SO_2 and O_2 to form SO_3 is exothermic, little SO_3 forms at high temperatures (above 1,400°C). At 600°C, about 70% of SO_2 can be converted to SO_3, but the reaction rate is much slower. Most of the SO_3 in boiler flue gas probably forms during the several seconds when combustion gas cools from 1,600-1,700°C to about 1,000°C.

On further cooling to about 200°C, SO_3 may combine with moisture to form mists of concentrated H_2SO_4, which can be hazardous to health.

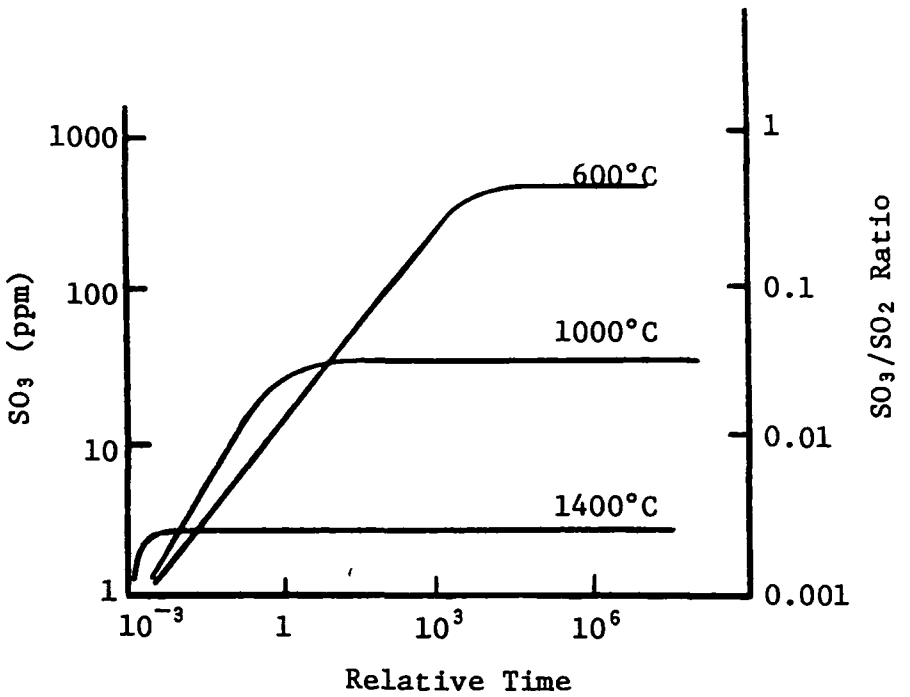

Figure 1-8. Schematic figure of SO_3 formation in heavy oil combustion gas (SO_2 1,000 ppm, O_2 1%).[2]

Formation of Sulfate from SO_2 in Atmosphere[2]--

The oxidation of SO_2 in ambient air to SO_3 or sulfate is promoted by moisture and particulates of vanadium, manganese, carbon, etc. Figure 1-9 shows the relationship between relative humidity and SO_4^{2-}/SO_2 ratio in ambient air at Kumagaya and Urawa cities, 80 and 40 kilometers north (downwind) of the Kawasaki industrial district, respectively. The figure indicates that the oxidation ratio is high at high humidities (above 75%) and is higher in Kumagaya, which is at a greater distance from the industrial area.

In most districts in Japan, 10-20% of total ambient SO_x is present as sulfate while normally only 2-5% of SO_x in flue gas is present as sulfate. The emissions of sulfate from

other sources, such as sulfuric acid plants, are not significant. Therefore, it is assumed that most of the sulfate in ambient air is formed in the atmosphere from SO_2 in the presence of moisture. Sulfuric acid formed in the atmosphere from SO_2 should be far more dilute than that in flue gas and hence less hazardous to health. However, it degrades the transparency of air because the overall amount is far larger than that of concentrated acid mist. In parallel to the decrease in SO_2 and sulfate concentrations, the transparency of the air in Japan has been appreciably improved.

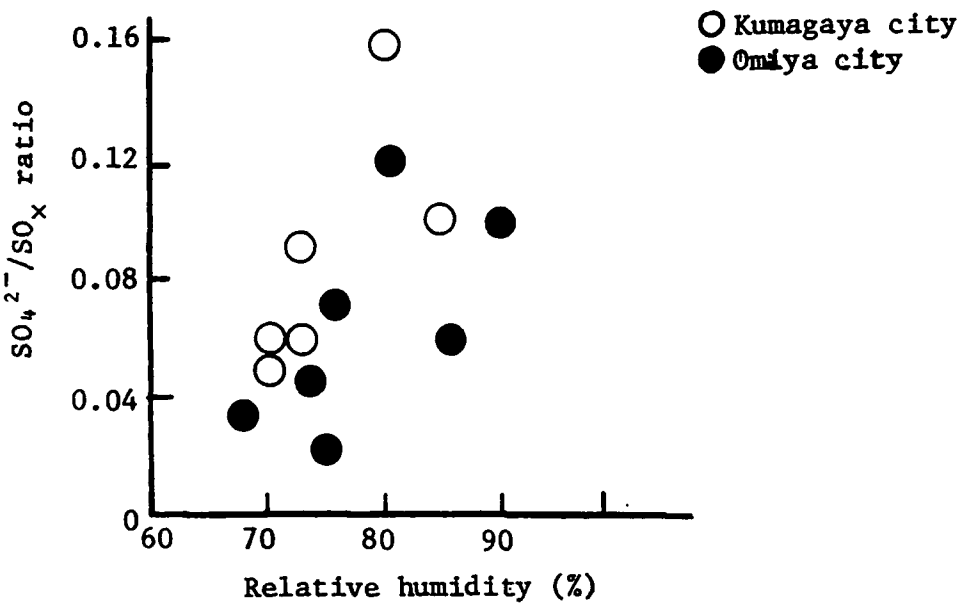

Figure 1-9. Relative humidity and oxidation of SO_2 to sulfate (June-July, 1975).

1.5.2 Difference Between the U.S. and Japan in Ambient Sulfate Levels

As stated earlier, the reduction of ambient sulfate in Japan has been parallel to the reduction of ambient SO_2. In the United States, however, SO_2 has been reduced considerably, but

there has been no appreciable decrease in sulfate.[3] For example, the three-year average SO_2 concentration in New York City decreased from 358 μg/Nm^3 in 1965-67 to 104 μg/Nm^3 in 1969-71, while sulfate decreased only slightly from 26.6 to 20.8 μg/Nm^3 in the same period. In Chicago, SO_2 decreased from 246 to 126 μg/Nm^3 while sulfate increased from 13.3 to 16.6 μg/Nm^3 in the same period. The difference in the situation between Japan and the U.S. may arise from the following reasons:

1) In the U.S. many oil-fired boilers were constructed in the above period. Oil-fired boilers usually produce less SO_2 but more sulfate than do coal-fired boilers. Vanadium in heavy oil may increase SO_3, while fly ash from coal may absorb SO_3.

2) In the U.S., very few oil-fired boilers are equipped with electrostatic precipitators. Moreover, small amounts of combustion promoting agents (usually oxidation catalysts) are sometimes added to oil in order to reduce unburned carbon. The reagent might increase SO_3 formation. In Japan such reagents are not used and all oil-fired utility boilers are equipped with electrostatic precipitators.

3) In Japan, ammonia is added to flue gas from oil-fired utility boilers (at about 150°C) before it enters the electrostatic precipitator to prevent corrosion of the precipitator. When the ammonia is added, most of the SO_3 (or sulfuric acid mist) in the flue gas is converted to fine crystals of ammonium sulfate, which are caught

by the precipitator. This procedure reduces SO_3 in flue gas considerably.

4) Recent extensive efforts in Japan to reduce NO_x in flue gas from oil-fired boilers have also resulted in reduced formation of SO_3 in flue gas.

5) A major portion of sulfate in ambient air in Japan is probably formed in the atmosphere from SO_2, because of the relatively high humidity in most districts in Japan and because of the above factors which lead to the reduction of SO_3 in flue gas. Therefore, reduction of sulfate in Japan is nearly proportional to that of SO_2.

Although reduction of ambient sulfate has been more effective in Japan than in the United States, it is possible that the mists of concentrated H_2SO_4 emitted from many smaller combustion sources in cities may still be largely responsible for diseases attributed to pollution. Unlike utility boilers, smaller oil-fired boilers in Japan have neither an electrostatic precipitator nor good combustion control. These numerous small boilers and diesel engines, both stationary and mobile, are not yet well regulated. They may be the major sources of mists of concentrated sulfuric acid, which could affect human health. Although the acid mists may represent a relatively small portion of total sulfates, most of the mists are emitted in cities and are highly concentrated.

1.6 EMISSION AND REGULATION OF NO_x

NO_x emission in Japan is estimated at about 2 million tons yearly. More than 90% of NO_x is formed by the burning of

fuels, such as heavy oil and gasoline. About 40% of total NO_x is derived from automotive exhausts, 20% from electric power generation, 30% from industry, and the rest from household heating, etc. In large cities such as Tokyo and Osaka, 60-70% of NO_x is traced to automobiles.

The ambient air quality standard for NO_2 was set forth in 1973 at 0.02 ppm for a daily average (about 0.008 ppm yearly average). This is the most stringent standard in the world (Table 1-10. The present yearly average of NO_2 concentration ranges from 0.02 to 0.04 ppm in many cities.

A revised standard has been applied since July 1978 which has a range of 0.04 to 0.06 ppm daily average. In regions where the NO_2 concentration exceeds 0.06 ppm, the concentration will be reduced to 0.06 ppm within seven years. In regions where the NO_2 concentration is 0.04 to 0.06 ppm, the concentration cannot appreciably exceed the present levels.

TABLE 1-10. NO_2 AMBIENT STANDARDS (ppm)

	1973		1978	
	Daily	Yearly	Daily	Yearly
Japan	0.02	(0.008)	0.04-0.06	(0.02-0.03)
U.S.		0.05		
West Germany	0.1	0.05		

The NO_x emission standard for stationary sources was first set up in 1973 and revised in 1975 and 1977 (Table 1-11). Less stringent regulations are applied to existing boilers with an FGD system (Table 1-12). New boilers, however, are subject to uniform NO_x regulations regardless of whether they are equipped with an FGD plant.

TABLE 1-11. NO_x EMISSION STANDARDS FOR STATIONARY SOURCES (ppm)

Sources	Capacity (1,000 Nm^3/hr)	New plants 1977	New plants 1975	New plants 1973	Existing plants 1977	Existing plants 1975	Existing plants 1973	O_2 in gas (%)
Boiler (gas-fired)	More than 500	60	100	130	130	130	130	5
	100-500	100	100	130	130	130	170	
	40-100	130	130	130	130	130	n*	
	10-40	130†	130	n*	150‡	150	n	
	5-10	150†	n	n	150‡	n	n	
	Less than 5	150†	n	n	n	n	n	
Boiler (Coal-Fired)	More than 100	400	480	480	480	600	750	6
	40-100	400	480	480	600	750	n	
	10-40	400†	480	n	600‡	750	n	
	5-10	400†	n	n	480‡	n	n	
	Less than 5	400†	n	n	n	n	n	
Boiler (oil-fired)	More than 500	130	150	180	180	230	230	4
	100-500	150	150	180	190	230	230	
	40-100	150	150	180	190	190	n	
	10-40	150†	150	n	230‡	n	n	
	5-10	180†	n	n	250‡	n	n	
	Less than 5	180†	n	n	n	n	n	
Iron ore sintering machine	More than 100	220	n	n	260	n	n	15
	Less than 100	230	n	n	270	n	n	
Alumina calciner	More than 10	220	n	n	n	n	n	10
Metal heating furnace	More than 100	100	100	200	160	220	220	11
	40-100	130	150	200	170	220	220	
	10-40	130	150	170	200	200	n	
	5-10	150	n	n	n	n	n	
	Less than 5	180	n	n	n	n	n	
Oil heating furnace	More than 100	100	100	170	170	210	210	6
	40-100	100	100	170	170	210	210	
	10-40	130	150	170	180	180	n	
	5-10	150	n	n	n	n	n	
	Less than 5	180	n	n	n	n	n	
Cement kiln	More than 100	250	250	n	480	n	n	10
	Less than 100	350	n	n	480	n	n	
Coke Oven	More than 100	170	200	n	350	n	n	7
	Less than 100	170	n	n	350	n	n	
Waste Incinerator	More than 40	250	n	n	n	n	n	12

* No regulation. † For plants to be constructed after September 10, 1977.
‡ Must be met by October 1, 1980.

TABLE 1-12. NO_x EMISSION STANDARDS (ppm) FOR EXISTING OIL-FIRED BOILERS WITH AND WITHOUT FGD SYSTEM

	Capacity (1,000 Nm^3/hr)				
	More than 1,000	500-1,000	40-500	10-40	5-10
Without FGD	180	180	190	230	250
With FGD	180	210	210	250	280

The emission standards can be met by using advanced technology for combustion modification or by switching fuels. The ambient air quality standard, however, is far from being attained even with the stringent emission standard. More stringent regulations to restrict the total quantity of NO_x emissions from stationary sources will be applied in several prefectures. The new regulations as well as local agreements require the construction of many flue gas denitrification plants that remove more than 80% of NO_x.

1.7 INVESTMENT FOR POLLUTION CONTROL[4]

Table 1-13 shows the investments made by Japanese industry for pollution control since 1974. Investments by all industries reached a maximum (nearly 1 trillion yen) in 1975, accounting for 17.1% of total industrial investments. This percentage is more than double the percentage spent for pollution control in the U.S. and in European countries. Investments decreased slightly in 1976 and substantially in 1977. A further decrease is estimated for 1978.

Most of the antipollution investments have been spent for air pollution control as shown in Table 1-14. A major portion of the air pollution control spending has gone to FGD. The slowdown in such investments after 1975 is due largely to a

TABLE 1-13. INVESTMENT BY INDUSTRY FOR POLLUTION CONTROL (I)
(10^9 yen)

	1974		1975		1976		1977		1978 (plan)	
	IP*	(%)†	IP	(%)	IP	(%)	IP	(%)	IP	(%)
All industries	786	(13.4)	929	(17.1)	855	(15.0)	574	(9.1)	457	(7.1)
Steam power	141	(47.7)	172	(47.4)	227	(45.0)	178	(34.3)	158	(28.4)
Steel	135	(16.1)	196	(17.9)	222	(23.3)	132	(15.6)	113	(13.5)
Petroleum	96	(25.8)	126	(34.4)	109	(37.1)	58	(18.8)	35	(7.9)
Nonferrous	23	(11.1)	22	(15.1)	130	(12.4)	18	(19.6)	14	(18.2)
Chemical	138	(27.5)	155	(32.0)	85	(21.8)	45	(13.2)	31	(10.0)
Petrochemical	50	(18.7)	66	(22.3)	43	(17.8)	23	(11.1)	14	(11.2)
Mechanical	49	(5.0)	37	(5.0)	34	(4.0)	39	(3.5)	23	(2.8)

* Investments for pollution control (10^9 yen).

† Proportion of pollution control investments in total investments by each industry.

TABLE 1-14. INVESTMENT BY INDUSTRY FOR POLLUTION CONTROL (II)
(10^9 yen)

	1976			1977			1978 (plan)		
	Air	Water	Solid waste	Air	Water	Solid waste	Air	Water	Solid waste
All industries	560	146	36	338	92	39	264	74	30
Steam power	203	12	3	144	7	5	127	10	5
Steel	167	29	6	86	20	12	68	20	5
Petroleum	76	6	2	29	3	2	18	5	1
Nonferrous	7	2	3	7	3	6	4	1	7
Chemical	22	27	5	17	13	4	9	7	3
Petrochemical	25	12	2	10	8	1	6	5	1

which requires relatively low investment. If the attainment of the very stringent ambient NO_2 standard is forced, a hugh investment, far larger than that required for FGD, will be required for flue gas denitrification facilities. This may have a considerable impact on the economy. As a result, the Japanese Environment Agency has recently reevaluated the ambient NO_x standards and reduced them to the values shown in Table 1-10.

1.8 MONITORING SYSTEM FOR POLLUTION CONTROL

In order to ensure the preservation of air and water quality, each prefectural government has an environmental research center. Most of the centers have a telemetering system to record the ambient and emission concentrations of pollutants. With these data, the centers can take necessary measures to assure compliance with regulations. As an example, the Aichi Environmental Research Center, one of the most advanced, is outlined below.

Aichi Prefecture embraces Nagoya City (population over 3 million) and various industrial regions. Included is the Yokkaichi industrial complex, which caused serious air pollution problems over 10 years ago. The center, established in Nagoya City in 1970, has the following organization:

Director Vice Director	Administration Division	12 members
	Air Quality Division	22
	Water Quality Division	20
	Industrial Microanalysis Division	6
	Noise and Vibration Division	5
	Higashimikawa Branch Laboratory	7

The Air Quality Division has 71 monitoring stations throughout the prefecture with automatic analyzers for ambient concentrations of SO_x, NO_x, CO, hydrocarbons, oxidants,

suspended solids, and other pollutants. In addition, the center has automatic SO_x analyzers to analyze the emission concentrations from the stacks of 40 major SO_x emission sources. These sources account for about 88% of the total SO_x emission in the prefecture.

The analyzers are placed in a small locked house and undergo maintenance and calibration by an instrumentation company under contract with the prefectural government. Hourly averages of the analytical data are sent via the telemetering system to the center, where they are recorded. The total investment for this air pollution monitoring system is about 3 billion yen.

The ambient standard for SO_x concentration, a daily average of 0.04 ppm, is equivalent to an hourly average of about 0.1 ppm. When the hourly averaged ambient SO_x concentration of any of the 71 stations exceeds 0.1 ppm for two hours, a warning is given to the region to cut down the SO_x emission from major sources. No such warning has been issued for the last 5 years because of the low ambient SO_x concentration.

The emission concentration monitoring system shows whether individual sources have maintained emission concentrations below assigned levels. An excessive emission results in a fine or forced shutdown of the source. Such occasions, however, have rarely occurred.

In 1976, over 80% of the region in the prefecture attained the ambient SO_x standard. It is expected that all of the regions will attain the standard in 1978.

In order to apply the new total mass regulation of SO_x, the measurement of gas volume is required in addition to the measurement of SO_x concentration. A telemetering system for the gas volume is under consideration. In some other centers, fuel consumption rates are also analyzed by the system.

SECTION 2

OIL AND COAL PROCESSING

2.1 OUTLINE

Hydrodesulfurization (HDS) of heavy oils, as well as flue gas desulfurization, went into commercial operation in 1968 and has since increased remarkably (Table 2-1). Two methods of HDS have been carried out in Japan. One is topped crude HDS by which heavy oil containing 2-4% sulfur is directly treated to reduce sulfur to about 1%. Since 1% sulfur oil has become unfit for use in many places, three oil companies recently constructed new HDS process plants which reduce sulfur to 0.1-0.3% using several reactors in series (Table 2-2). The new HDS process, however, is applicable only to heavy oils which contain a small amount of the metallic impurities which poison the catalyst. Moreover, just as much hydrogen is required to decrease sulfur from 1.0 to 0.3% as to decrease it from 2.5 to 1.0%.

TABLE 2-1. CAPACITY OF HEAVY OIL DESULFURIZATION (BPSD)

Year	Topped crude	Vacuum gas oil	Total
1968	40,000	105,500	145,500
1969	67,760	225,000	292,760
1970	112,760	256,000	368,760
1971	152,760	356,500	509,260
1972	190,760	564,500	755,260
1973	194,000	667,500	861,500
1974	239,000	728,500	967,500
1975	364,000	910,500	1,274,500
1976	394,000	956,500	1,350,500
1977	424,000	956,500	1,380,500

TABLE 2-2. NEW HDS PLANTS

Refinery	Capacity (BPSD)	Process	S(%) in product	Start
Aichi Refinery Idemitsu Kosan	50,000	Gulf Type IV	0.1	Nov. 1975
Yokohama Refinery Asia Oil	30,000	UOP-RCD-Unibon	0.3	Jan. 1976
Chiba Refinery Maruzen Oil	30,000 30,000	Uni-cracking	0.3 0.1	July 1976 July 1977

The other method is vacuum gas oil HDS by which vacuum gas oil obtained by vacuum distillation of heavy oil is desulfurized to 0.1-0.2% sulfur. This treatment is easy because of the low metallic impurity content of the vacuum gas oil. However, the residual oil (asphalt) from the distillator, which amounts to about 40% of heavy oil and contains much sulfur and metallic impurities, is difficult to desulfurize.

Many plants for thermal decomposition of residual oil as well as gasification of heavy oil were planned in 1972 in order to reduce sulfur to 0.1-0.2%, but most of the plans were abandoned because of the inflation and economic depression which followed the oil crisis. Only two plants, a Flexicoking process plant of Toa Oil Co. and a Eureka process plant of Eureka Industry Co., have been commercially installed.

Tests on coal gasification and liquefaction have been made since 1974, but the efforts are not as extensive as in the U.S. These processes may not be very advantageous in Japan which depends on imports for the majority of its coal requirements. Unique processes for the combined treatment of asphalt and coal are also under investigation. These processes include the Cherry process by Osaka Gas, hybrid gasification by Hitachi

Ltd., and Solvolysis liquefaction by Kyushu Industrial Technology Laboratory.

2.2 FLEXICOKING[5]

At its Kawasaki refinery Toa Oil Co. installed an oil processing plant with a capacity of treating 50,000 BPSD heavy oil by vacuum distillation and 21,000 BPSD residual oil by Flexicoking. The plant went into operation in October 1976.

A simplified flowsheet of the Flexicoking process is shown in Figure 2-1. The vacuum residue is fed to a reactor at 510-570°C. The temperature is maintained by circulating coke heated to 600°C in a heater. (Heat is provided by hot gas from a gasifier.) The by-product of the thermal decomposition in the reactor, a mixture of LP gas, naphtha, gas oil and coke, is sent to a cyclone at the top of the reactor in order to separate coke. It is then sent to a scrubber for oil scrubbing to be cooled to 360-380°C and to further remove coke. The product is finally sent to a rectifier to recover LP gas, naphtha and gas oil.

Coke from the process is sent to a heater. Most of the heated coke is returned to the reactor; the rest is sent to a gasifier and gasified at 960°C by air and steam. The hot gas is introduced into the heater to heat coke and then into a steam generator to recover excess heat. The gas is then passed through a cyclone and venturi scrubber for coke separation, treated in a convertor to convert COS to H_2S, and then treated in a wet H_2S removal system by the Stretford process. The refined coke gas has a low heating value (1,050 kcal/Nm^3) and is used for fuel in the refinery.

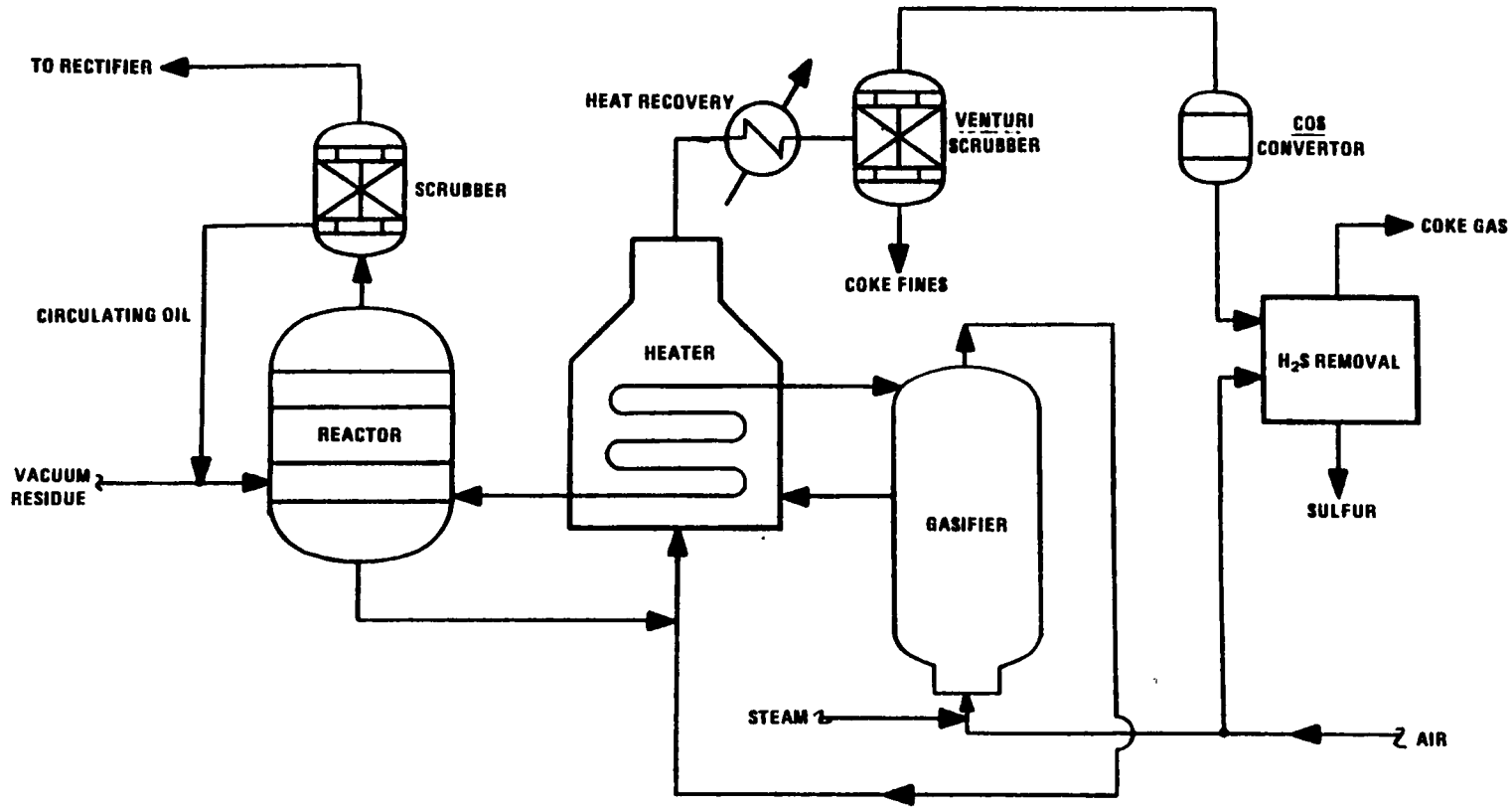

Figure 2-1. Simplified flow sheet of Flexicoking process.

A material balance of the total system starting from crude oil is shown in Figure 2-2. The main product, low sulfur oil LSN 100, is of a good quality with 0.1% S and 0.05% N.

The investment cost reached 70 billion yen (280 million dollars) for the vacuum distillator, Flexicoker and Gofiner (hydrodesulfurization) including a hydrogen generator, boiler and wastewater treatment system.

Although the process offers the advantage of producing a high quality oil from a crude containing many metallic impurities, there is no plan yet to install another unit because of the high investment cost involved and the current economic depression.

2.3 EUREKA PROCESS (KUREHA PROCESS)[6]

The Sodeguara plant, Eureka Industry Co. has a capacity of treating 1 million tons of residual oil (asphalt) from vacuum distillation of heavy oil. The plant has been in smooth operation since its start-up in March 1976. A flowsheet of the process is shown in Figure 2-3. Residual oil containing 4 to 5% uslfur is treated in reactors at 500°C for several hours with steam preheated to above 700°C. The steam carries heat and promotes distillation.

Typical product patterns and an economic balance are shown in Tables 2-3 and 2-4. The cracked naphtha and gas oil contain few heavy metal impurities and are easily treated by hydrodesulfurization. The gas from the reactor contains about 15% H_2S, which is removed by a conventional process using amine. The purified gas (about 1,600 kcal/Nm^3) is used for fuel. The pitch, which contains 4-8% sulfur, is used by Sumitomo Metal as a binder for poor-coking coal for coke production.

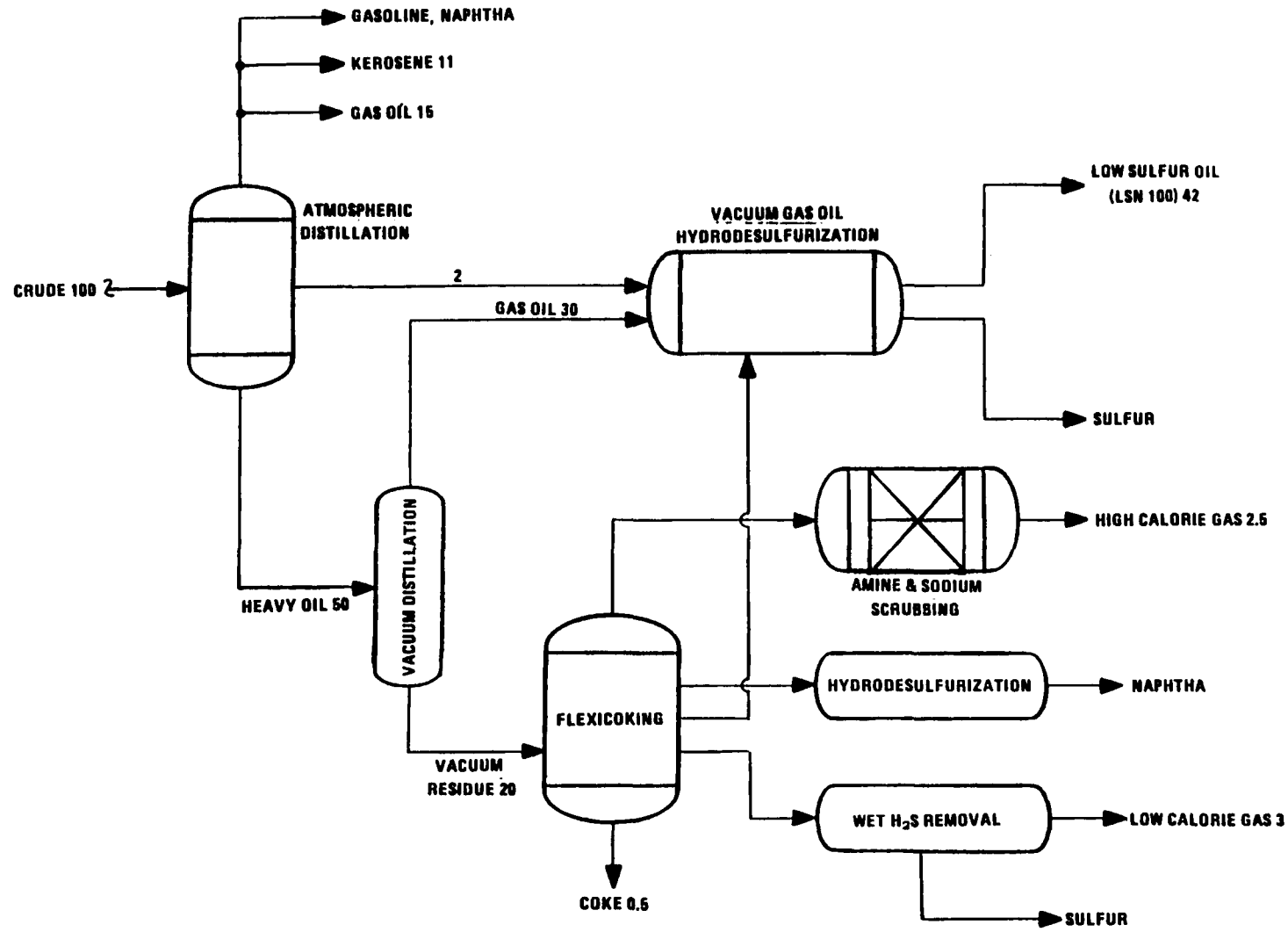

Figure 2-2. Material balance of crude oil treatments including Flexicoking.

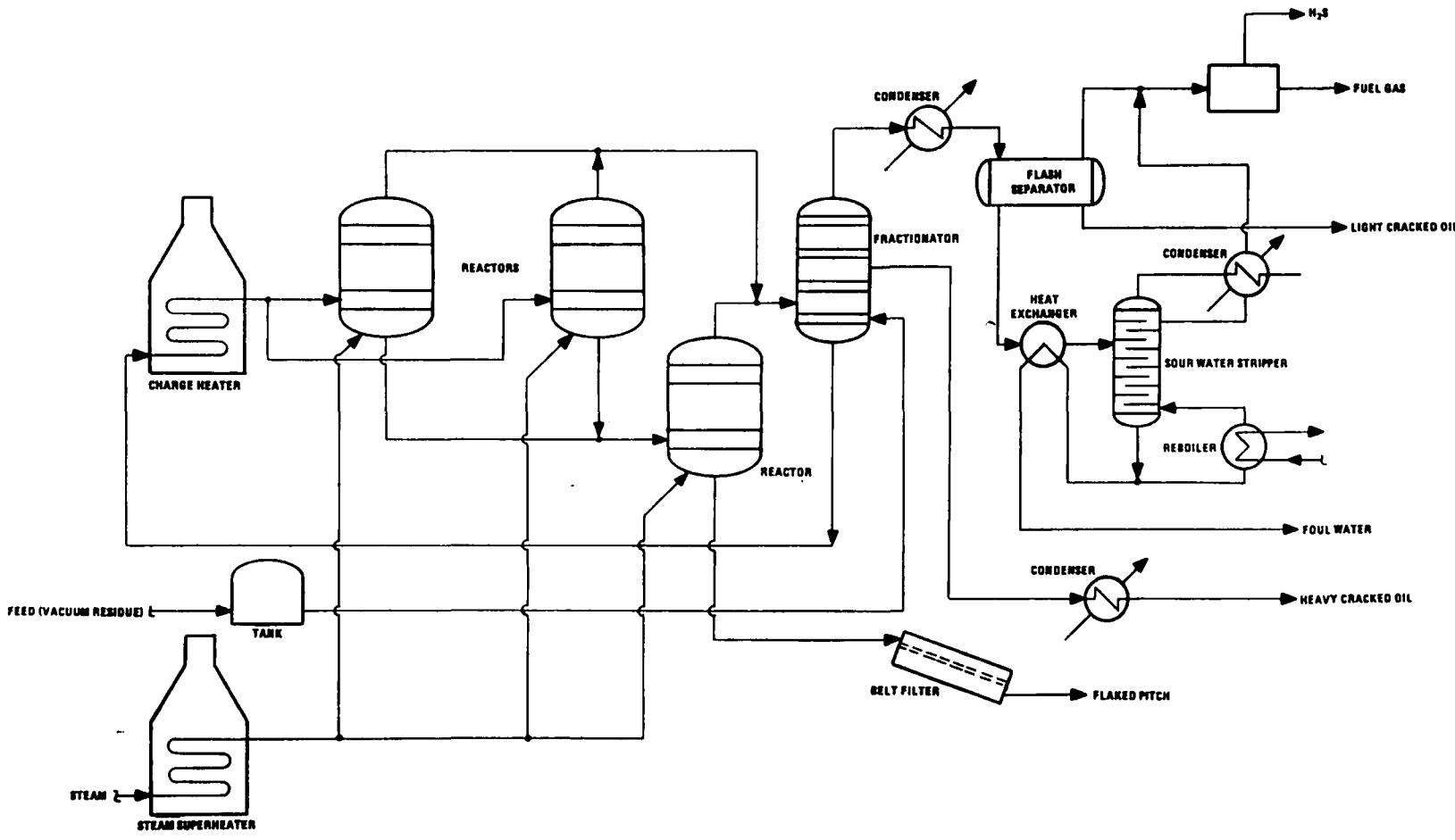

Figure 2-3. Flow sheet of Eureka process.

TABLE 2-3. TYPICAL PRODUCT PATTERNS

Products	Khafji vacuum residue			Iranian Heavy vacuum residue		
	Yield (%W)	Sulfur content (%W)	Sulfur distri-bution (%W)	Yield (%W)	Sulfur content (%W)	Sulfur distri-bution (%W)
Gas	5.2	14.5	14.2	5.4	10.7	16.8
Cracked naphtha	8.3	1.9	3.0	11.3	1.7	5.6
Cracked gas oil	54.7	3.6	37.2	52.9	2.5	38.5
Pitch	31.8	7.6	45.6	30.4	4.4	39.1

Note: 1. Sulfur content of Khafji vacuum residue and Iranian Heavy vacuum residue is 5.30 and 3.43 (%W), respectively.

2. Main components of gas are C_1-C_5 paraffins and olefins.

TABLE 2-4. ECONOMIC BALANCE OF RESIDUAL OIL CRACKING PROCESS (1 million tons of vacuum residue per year) ($1 ≐ ¥300, in 1976)

	Quantity (million tons/yr)	Unit price (yen/kg)	Unit price (¢/lb)	Cost (million yen/year)	Cost (million $/year)
Raw material					
Vacuum residue	1	13.2	2	13,200	44
Processing cost					
Utilities				930	3.1
Fixed cost (30% of investment)				3,087	10.3
				17,217	57.4
Product Value					
Cracked oils	654	19.8	3	12,930	43.1
Pitch	300	14.3	2.17	4,287	14.3
				17,217	57.4

Note: 1. Investments including off-site are 10,290 million yen in Japan, 1975.

2. The price of coal tar pitch is considered between 9-15 ¥/lb (3-5 ¢/lb) in Japan, 1975.

2.4 CHERRY PROCESS[7]

Osaka Gas Co., jointly with Mitsubishi Heavy Industries, has developed a new asphalt decomposition process. The new process solves a common problem, coking on the reactor wall, by adding a small amount of pulverized coal to asphalt. A pilot plant with a capacity of treating 10,000 tons of asphalt yearly started operation in August 1976. A flowsheet is shown in Figure 2-4.

Asphalt with a small amount of coal powder is heated in a furnace, cracked and polymerized in a reactor at 410°C under 15 atmospheric pressure (228 psi) for 3 to 5 hours, and then led into a flash drum, where lighter fractions are separated. The bottom product of the flash drum is centrifuged to separate liquid and solid. The liquid is sent to a distillation column to produce a gas, oil and pitch. A typical example of yield with asphalt from Iranian Heavy and Candian anthracite coal powder is 6% gas, 7% naphtha, 9% kerosene, 18% gas oil, 10% vacuum gas oil, 33% pitch for binder, and 17% solids as a coal substitute. A portion of the solids can be recycled to the system. No coking on the reactor wall or effluent line has been observed.

The product gas consists of 46% methane, 22% ethane, 8% propane, 7% butane, 3% hydrogen, about 10% H_2S, and other components. Sulfur and nitrogen contents of the by-product oil are shown in Table 2-5.

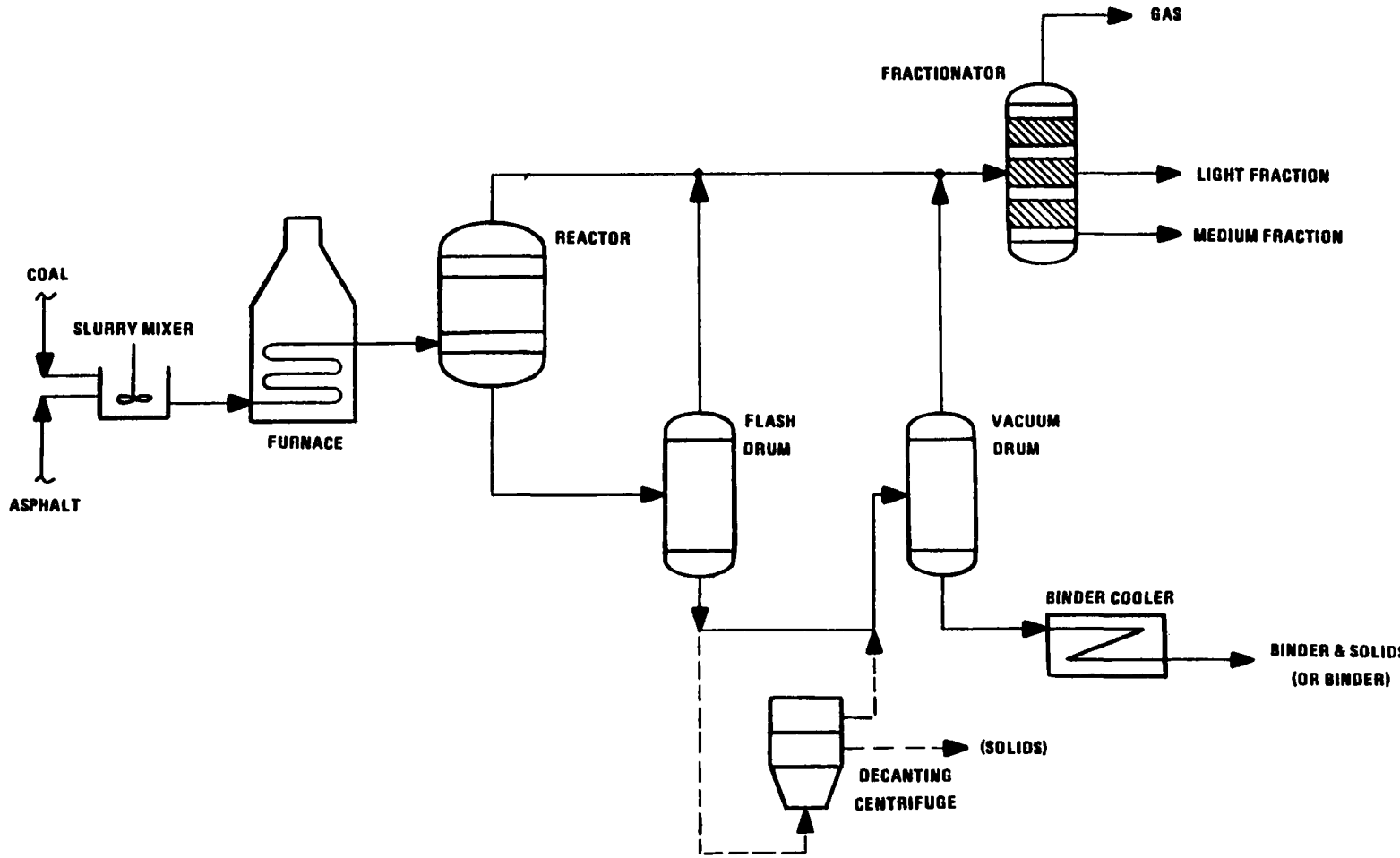

Figure 2-4. Flow sheet of Cherry process.

TABLE 2-5. S AND N CONTENTS OF PRODUCT OIL FROM THE CHERRY PROCESS

	Light naphtha	Heavy naphtha	Kerosene	Gas oil	Vacuum gas oil
S (wt %)	0.26	0.68	0.83	1.35	2.46
N (wt %)	0.0024	0.0083	0.023	0.061	0.27

The H_2S in the gas and S in the oils can be easily removed by conventional processes. The pitch is useful as a binder in coke production. The solids (coal substitute) are of a quality suitable for coke production.

2.5 COAL-RESIDUAL OIL HYBRID GASIFICATION PROCESS[8]

This process has been tested in a small pilot plant by Hitachi Ltd. with financial support from the Sunshine Project. Major items being studied are as follows:

1) The gasification reaction of a coal-residual oil slurry with steam and oxygen under high pressure and high temperature.

2) The structure of a fluidized bed gasifier.

3) A uniquely designed slurry feed system which combats rapid abrasion and offers high pressure and large capacity.

In the coal-residual oil hybrid gasification process, as shown in Figure 2-5, a coal-residual oil slurry is converted to gas and char in the first stage fluidized bed reactor by heat from the second stage reactor. In the second stage reactor

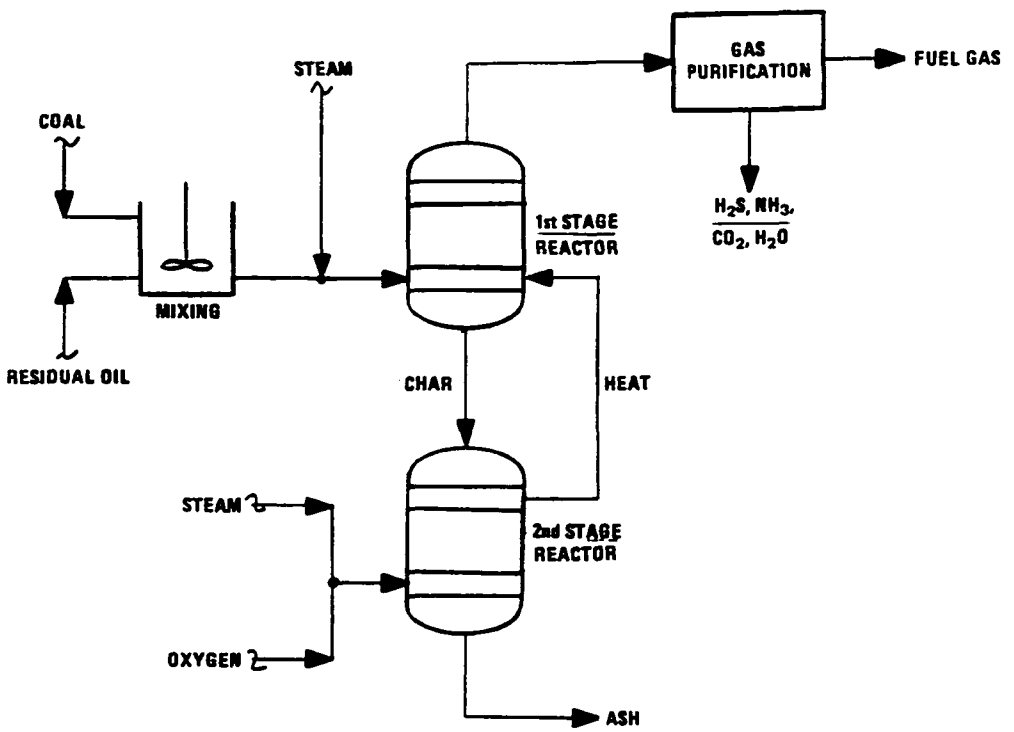

Figure 2-5. Flow sheet of coal-residual oil hybrid gasification

the char produced in the first stage reactor is partially oxidized with steam and oxygen.

One advantage of this process is that not only coal but also residual oil, which is very difficult to desulfurize, can be converted to a clean fuel gas. Another advantage is that powdered coal mixed with residual oil can be easily charged to the pressurized fluidized bed gasifier.

Tests and Results

Following bench scale tests, a gasifier with the following specifications was constructed in 1975:

Gasifier:	1st stage (thermal cracking of slurry)	120 mm diam., 2,000 mm long
	2nd stage (partial oxidation of char)	80 mm diam., 2,000 mm long

Max. pressure: 70 kg/cm^{2}G (1,000 psig)

Max. feed rate: 15 kg/hr (33 lbs/hr)

The experimental conditions and results with this apparatus are as follows:

1) Experimental conditions

Pressure: 5-20 kg/cm^{2}G

Temperature { 1st stage: 700-800°C
2nd stage: 900-950°C

Slurry feed rate: 1-3 kg/hr

Feed materials { Coal - Taiheiyo coal
Residual oil - Gach Saran vacuum residue

Coal:Residual oil = 30:70 (wt)

2) Results

- In the first stage, thermal cracking of coal-residual oil slurry, the main components of the product gas are H_2 and CH_4: the higher the temperature, the greater the yield of CH_4; and the higher the pressure, the greater the yield of C_2H_6 and C_3H_6.

- In the second stage, oxidation of char, the gases produced are mainly H_2, CO and CO_2, which are in equilibrium by the following reaction:

$$CO + H_2O \rightleftarrows CO_2 + H_2$$

- The heating value of the product gas is about 4,000 kcal/Nm^3 (450 Btu/ft^3). (When H_2S and CO_2 are removed the value reaches 6,000 kcal/Nm^3 (670 Btu/ft^3)).

- Heat transfer from the second stage reactor to the first stage reactor by hot char and gas improves the overall thermal efficiency of the process.

In order to make better use of the heat of the hot char, Hitachi proposed a new type of gasifier in which the hot char is circulated between the first and the second stage reactors. A new plant named Equipment Development Unit with a 300 mm-diameter gasifier was constructed in March, 1977.

The Hybrid Gasification Process needs a slurry feed system that overcomes rapid abrasion and offers a high

pressure and a large capacity. A unique slurry feed system named "Hydrohoist," developed by Hitachi, was modified and applied to the coal-residual oil slurry. A 50% (by weight) coal slurry can be pumped at 190°C.

Tests are in progress to obtain data necessary to design (in 1978) a pilot plant with a capacity of treating 12-15 tons/day of the coal-residual oil slurry to produce 7,000 Nm^3/day of synthetic natural gas.

2.6 LOW-CALORIFIC GASIFICATION OF COAL[8]

The Coal Mining Research Center has been developing a low calorific gasification process for electric power generation. This is one of the most forerunning of all the coal conversion programs being conducted by the Japanese government under the full-funded "Sunshine Project".

The process adopts a two-stage fluidized bed gasifier (Figure 2-6). Crushed coal is fed through a lock-hopper system into the upper stage of the gasifier, which functions as a carbonizer by devolatilizing feed coal with a hot gas stream flowing upward from the lower stage of the gasifier. Char carried over by crude gas is separated in cyclones and recycled to the lower stage of the gasifier, where char is partially burned with air to generate the heat necessary for gasifying the remaining char with steam. Ash is withdrawn through a lock-hopper system from the bottom or from an overflow outlet near the bottom of the gasifier. Tar in crude gas, if any, is washed out by water scrubbing. Before any dry gas-cleanup process becomes practical, a Benfield unit will have to be used to remove sulfur compounds in the product gas.

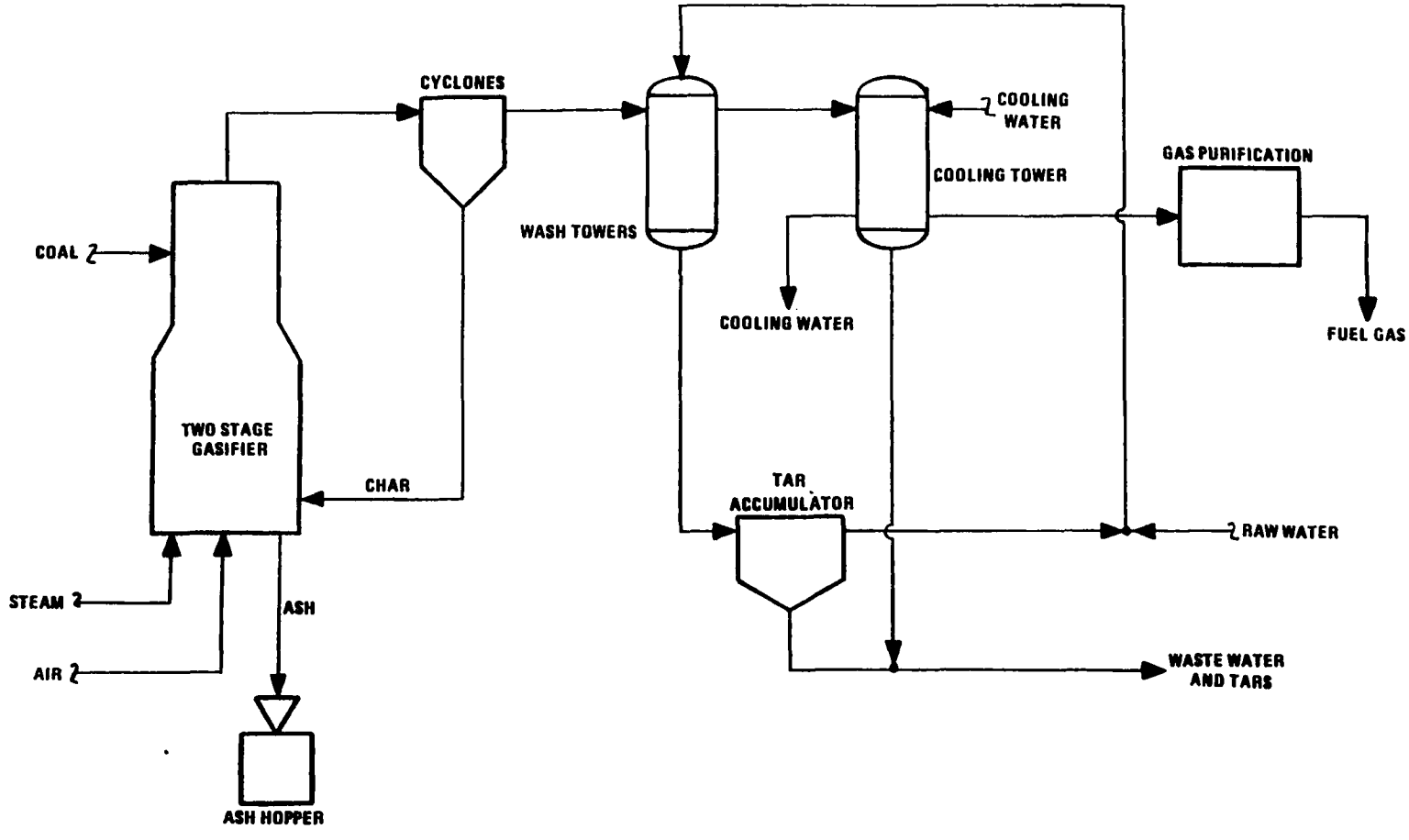

Figure 2-6. Flow sheet of low calorific coal gasification.

Based upon the gasifier conception described above, a 200 kg coal/hr gasification test plant for operation under 10 atmospheres pressure was designed and constructed in 1974. Following a number of shakedown tests, the plant started gasification operation late in 1975. Since then, more than 50 runs have been made using Taiheiyo coal, a noncaking coal produced in Hokkaido, as feedstock. The gasification temperature and pressure were in the ranges of from 975 to 1,095°C and up to 7 atmospheres gauge, respectively; while feed coal varied between 0.28 and 0.50 mm in mean particle size. Given below are the main operation conditions as well as some results from one of the long runs in the series:

Coal feed rate	128 kg/hr
Gasification temperature	950°C
Gasification pressure	7 atm.G
Gas output rate	324 Nm^3/hr
Gas composition	
H_2	19.4%
CO	11.2%
CH_4	1.0%
CO_2	16.4%
N_2	49.6%
O_2	0.7%
Gas heating value	1,300 kcal/Nm^3

During these gasification runs, some problems were encountered. Among them, clinker formation at the gasifier bottom was the most troublesome. It took some time to find that the gasification temperature should be kept considerably lower than the melting point of the ash contained in the feedstock in order to avoid such a trouble, and that the velocity of the gasification reagents blown into the gasifier through the distributor

was an important factor. Another major problem was by-product tar, which may be diminished by temperature elevation at the upper stage of the gasifier. However, the difficulty in separating low-carbon ash from the gasifier, a common fundamental drawback of fluidized beds, still remains to be solved. The Coal Mining Research Center plans to start basic research for dry gas-cleanup and ash agglomeration methods.

Tests with a 40 ton/day gasification pilot plant are expected to begin in 1979, and a demonstration plant including combined cycle generators is expected to start in 1981.

2.7 OTHER COAL TREATING PROCESSES

There are a few unique coal treating processes being tested in a small scale, funded by the Sunshine project. They will be described below.

In addition to these processes, solvent refining of coal has been studied by the Mitsui SRC group. A pilot plant with a capacity of treating 5 ton/day of coal was put into operation in early 1978. The study aims at the production of a binder for the production of coke for steel mills from non-coking coal. No data have been published on the study.

2.7.1 Solvolysis Liquefaction[8]

A study was originated at the Kyushu Industrial Technology Laboratory as an attempt to liquefy coal with asphalt (vacuum residue) by the "Solvolysis" reaction at about 400°C. The process is expected to have the following advantages:

1) The liquefaction reaction can be carried out at atmospheric pressure without using hydrogen.

2) The coal ash formed by the reaction has a special property which makes it readily separable.

The study has been funded by the Sunshine Project. Mitsubishi Heavy Industries has joined the project for further development. Following these batch tests, a 1 ton/day pilot plant is near completion. A flow sheet of the process is shown in Figure 2-7.

By using Khafji vacuum residue with Miike coal at an equal weight and reacting them at 370°C for 1 hour, about 40% of the coal was liquefied. By using a pitch obtained from the Khafji vacuum residue, much better liquefaction of the coal was attained but the separation of the ash was difficult. The reactivity, as well as the properties of the product, was found to vary widely with the type of coal and asphalt or pitch. Studies are being continued to search for suitable combinations and optimum conditions.

2.7.2 Plasma Gasification of Coal[5]

Plasma gasification aims at obtaining useful gases such as acetylene and hydrogen from coal by means of a plasma jet.

The plasma jet is a high-temperature, dense-energy electromagnetic fluid which is formed through a direct current arc discharge and is ejected in a jet through a nozzle. The temperature of plasma jets ranges between 10,000 K and 30,000 K.

Experiments have been performed to obtain useful gases (C_2H_2, C_2H_4, H_2, CO, etc.) from various hydrocarbons, petroleum, and coal using a plasma jet. The maximum capacity of the plasma

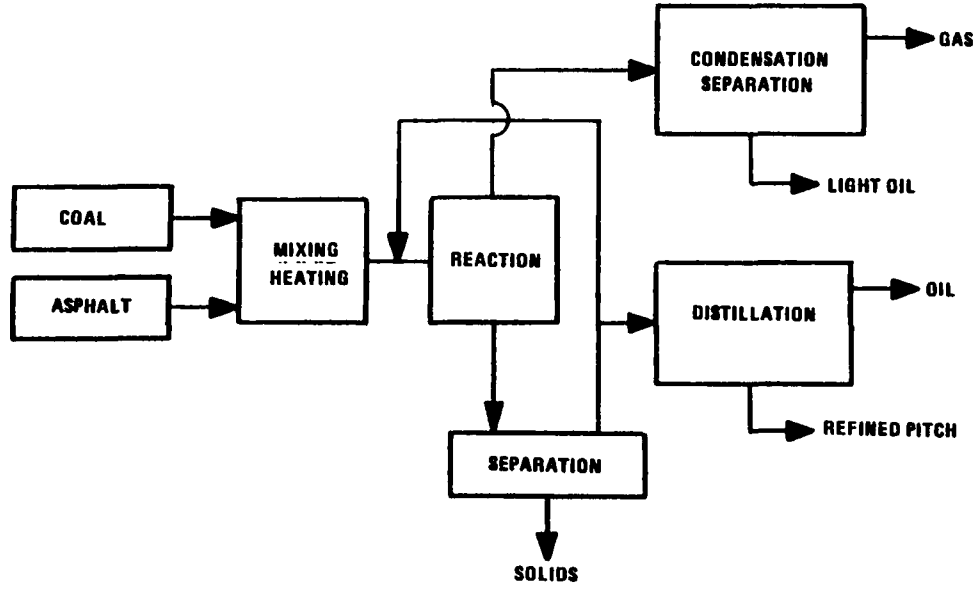

Figure 2-7. Flow sheet of solvolysis liquefaction.

generator used for these experiments is 15 kW. Table 2-6 shows results obtained.

TABLE 2-6. PRELIMINARY RESULTS OF PLASMA GASIFICATION

Feedstock	Yield of acetylene (g/kWh)	Note
n-Paraffin	75-105	Noticeable amount of C_2H_4 is produced
Cyclohexane	101	
Tetraline	101	
Gas oil	99	
Coal	15	

Plasma gas: H_2
Flow rate: 100 liters/min

Since the conversion efficiency was low with coal, further tests have been performed to increase the efficiency by using a special plasma generator. The generator consists of three separate torches tilted so as to focus on one point in order to provide better mixing of the plasma flame and coal. A 100 kW plasma gasifier with three tilted torches has been used.

2.7.3 Coal Gasification by the Molten Salt Lime Slurry Process

This process has been tested by Mitsubishi Heavy Industries with a fund of the Sunshine Project. The process uses a gasifier and a lime regenerator with a circulating slurry of lime in molten salts (Figure 2-8). Pulverized coal and steam are fed into the molten salt bath at nearly 900°C to generate H_2, CO, CO_2, CH_4, etc. Lime in the slurry readily reacts with CO_2 to form $CaCO_3$. Heat released from this reaction is useful

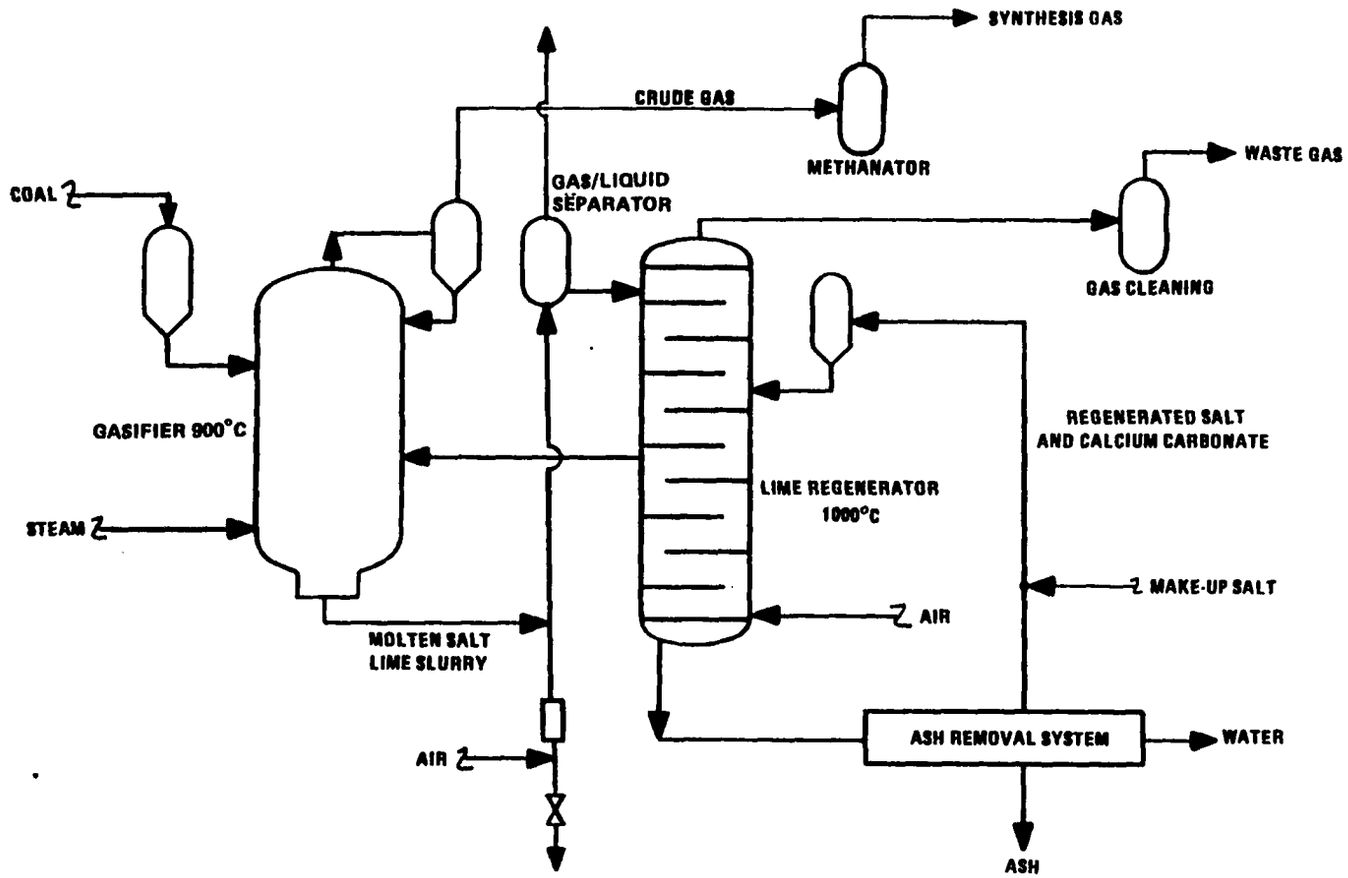

Figure 2-8. Flow sheet of molten salt lime slurry process.

in promoting the endothermic reactions between the steam and coal. A portion of the heat required for the gasification is supplied by circulating the molten salts at 1,000°C. Sodium and potassium nitrates and chlorides may be used as the salts.

The slurry containing calcium carbonate and char formed by the reaction is withdrawn from the gasifier and sent to the lime regenerator. Air is blown into the regenerator to burn the char and to regenerate lime by the heat. The slurry is then recycled to the gasifier.

The gas produced in the gasifier is passed through waste heat recovery, purification, and methanation steps to produce a high calorie fuel gas.

The process has the advantage of producing a high-calorie gas using no oxygen. Another advantage is that the lime reacts with H_2S from coal so that the gas leaving the gasifier is virtually free from sulfur. The rates of the reaction of lime with CO_2 and H_2S are much larger in the molten salt than in a conventional fluidized bed.

The process, however, may have the following problems to be solved:

1) Corrosion may be caused by the molten salt and result in the loss of molten salt.

2) Coal ash reacts with lime, resulting in an incomplete separation of the ash.

3) The slurry may be too viscous at a high concentration.

4) Transportation of the molten salt slurry may not be easy on a large scale.

2.8 FLUIDIZED BED COMBUSTION OF COAL

Fluidized bed combustion (FBC) of coal has not been considered as promising in Japan as in the U.S., mainly because of the difficulty in discarding the by-product ash which contains lime and calcium sulfate. However, since increasing use of coal is desired, a few companies have started small scale tests of FBC aiming to develop their own technology to reduce both SO_x and NO_x emissions and to improve thermal efficiency.

Coal Industry Council of Ministry of International Trade and Industry (MITI) made a recommendation in 1977 concerning the use of coal in which FBC was stated as one of the important items. In 1978 MITI has a budget of ¥56 million to promote the study of FBC by process developers. One half of the expense for the studies is going to be subsidized by the fund. MITI has the following tentative plan for the development of FBC.

1979 - 1981	Pilot plant, about 1.5 MW equivalent
1981 - 1983	Demonstration plant, about 30 MW
From 1984	Prototype plant, about 100 MW

2.8.1 Babcock Hitachi Ltd.

Following basic studies, Babcock Hitachi has carried out bench-scale tests using a furnace 550 x 550 mm in bed size and 5120 mm in height with a capacity of burning 100 kg/hr of coal. Domestic coal, Miike coal (S = 2.5%) and Taiheiyo coal (S = 0.3%) have been used for combustion at 800-900°C under atmospheric pressure. Granular limestone has been used to remove about 90% of SO_2 and to separate the calcined limestone (a mixture of calcium sulfate and lime) from fly ash.

Actually, a considerable portion of the calcined limestone becomes powdery and is lost with the fly ash. Babcock Hitachi is going to use a synthetic granular absorbent which does not break in the furnace. This absorbent can be separated from fly ash and regenerated by heating which releases concentrated SO_2 gas. This gas may be used for sulfuric acid production.

Two stage combustion has been used to reduce NO_x to about 150 ppm.

2.8.2 Kawasaki Heavy Industries

Kawasaki Heavy Industries started tests of FBC two years ago, finished studies using a small furnace (100 x 100 mm in bed size), and has started tests with a larger furnace with a 500 x 500 mm bed capable of combusting 60 kg/hr of coal. About 90% of SO_2 is removed using dolomite.

2.8.3 Mitsui Engineering and Shipbuilding

Mitsui Engineering and Shipbuilding Co. is going to install a small test plant of FBC. The objective is to apply FBC of coal to ship engines and to improve thermal efficiency. SO_2 removal has not been considered.

SECTION 3

GENERAL ASPECTS OF FLUE GAS DESULFURIZATION

3.1 MAJOR FGD PROCESSES AND PLANTS

Table 3-1 lists major constructors of FGD plants and numbers and capacities of plants operational at the end of 1977. The plants totaled nearly 600 and their combined capacity reached 89,000,000 Nm^3/hr (equivalent to 29,000 MW). About half of this capacity is accounted for by utility boulers (mostly oil-fired). The rest is accounted for by industrial boilers, iron-ore sintering machines, nonferrous metal industry, sulfuric acid plants, etc.

About 50% of all the plants, in terms of capacity, use the wet lime/limestone process to by-produce gypsum, 16% use the indirect lime/limestone process (double alkali type), 13% use regenerable processes to by-produce sulfuric acid, ammonium sulfate and elemental sulfur, and 24% use sodium scrubbing to by-produce sodium sulfite or sulfate. About 80% of the sodium scrubbing plants by-produce sodium sulfite for paper mills. The rest oxidize the sulfite by air bubbling to sulfate, which is either used in the glass industry or purged in wastewater.

The average plant capacity is 426,000 Nm^3/hr for the wet lime/limestone, 286,000 Nm^3/hr for the indirect lime/limestone, 379,000 Nm^3/hr for the regenerable processes, and 61,800 Nm^3/hr for the sodium scrubbing processes. In addition to the 392 sodium scrubbing plants listed in Table 3-1, there

TABLE 3-1. NUMBERS AND CAPACITIES (1,000 Nm /hr) of FGD PLANTS BY MAJOR CONSTRUCTORS (OPERATIONAL AT END 1977)

Plant constructor	Wet lime/ limestone		Indirect lime/ limestone		H_2SO_4, S $(NH_4)_2SO_4$		Na_2SO_3 Na_2SO_4		Total	
Mitsubishi Heavy Industries (MHI)	33	(18,270)					3	(292)	36	(18,562)
Ishikawajima H.I. (IHI)	17	(4,445)					79	(4,351)	96	(8,796)
Hitachi, Ltd.	13	(6,940)*			2	(590)	15	(603)	30	(8,133)
Mitsubishi Kakoki (MKK)	2	(256)			13	(6,478)†	41	(913)	56	(7,643)
Kawasaki Heavy Industries	4	(756)	6	(5,450)			7	(256)	17	(6,380)
Tsukishima Kikai (TSK)	1		4	(398)	1	(88)	40	(4,042)	46	(4,528)
Chiyoda Chemical Eng. & Construc.			14	(4,459)					14	(4,459)
Oji Koei							57	(4,280)	57	(4,280)
Fuji Kasui Engineering	7	(3,954)					6	(270)	13	(4,224)
Kurabo Engineering			5	(413)	1	(18)	106	(3,751)	112	(4,182)
Mitsui Miike-Chemico	4	(2,744)			1	(500)			5	(3,244)
Ebara Manufacturing			11	(1,914)			10	(1,167)	21	(3,081)
Nippon Kokan (NKK)	3	(245)	1	(150)	2	(1,990)	6	(62)	12	(2,447)
Kureha Chemical							8	(1,431)	8	(1,431)
Showa Denko							5	(1,372)	5	(1,372)
Gadelius							8	(1,291)	8	(1,291)
Sumitomo (SCEC)-Wellman					6	(1,288)			6	(1,288)
Mitsui Metal Engineering	4	(1,006)			2	(130)			6	(1,136)
Kobe Steel	5	(1,125)							5	(1,125)
Japan Gasoline	1	(330)			1	(125)			2	(455)
Dowa Engineering			5	(500)					5	(500)
Niigata Iron Works			1	(185)					1	(185)
Mitsui Shipbuilding							1	(160)	1	(160)
Sumitomo Heavy Industries					1	(150)			1	(150)
Total	94	(40,071)	47	(13,422)	30	(11,357)	392	(24,241)	563	(89,052)

* Babcock - Hitachi

† Wellman - MKK

are nearly 500 smaller ones operated commercially with an average capacity of about 20,000 Nm^3/hr.

Flue gas desulfurization in Japan has made remarkable progress since 1972. The rapid growth was due to both the economic advantage of FGD over the use of low-sulfur fuels and to the reliability of FGD plant operation. The growth, however, is likely to slow down after 1977 for the following reasons:

1) Ambient SO_2 concentration in large cities and industrial districts has decreased to 0.02-0.03 ppm, almost meeting the ambient standard.

2) The recent economic depression has prevented industry from building new plants.

3) FGD by-products are being overproduced.

4) The cost difference between low and high sulfur oils is decreasing.

An increase in the use of coal for power generation, however, will result in a need for more FGD plants. At present one FGD plant is under construction and two are to be completed by 1979 for new coal-fired utility boilers.

3.1.1 Status of FGD for Power Companies

Table 3-2 lists power companies along with their capacities of steam power generation and FGD. The nine major companies (Nos. 1 to 9 in the Table) have produced about 86% of the total steam power. They mainly use oil, but also use some LNG and a little coal. Electric Power Development Co.

TABLE 3-2. CAPACITIES OF STEAM POWER GENERATION AND FGD OF POWER COMPANIES

No.	Power company	Power generation (MW) Existing	Under construction*	Total(A)	FGD (MW) Existing	Under construction*	Total(B)	B/A (%)
1	Hokkaido	1,270	1,225	2,495	0	525	525	21.0
2	Tohoku	3,925	1,200	5,125	550	350	900	17.6
3	Tokyo	19,167	4,400	23,567	283	0	283	1.2
4	Chubu	9,933	3,800	13,733	970	0	970	7.1
5	Hokuriku	1,412	1,000	2,412	600	500	1,100	45.6
6	Kansai	10,672	1,200	11,872	930	0	930	7.8
7	Chugoku	3,777	1,800	5,777	1,350	700	2,050	35.5
8	Shikoku	2,687	450	3,137	900	0	900	28.7
9	Kyushu	4,500	2,700	7,200	1,376	250	1,626	22.6
10	EPDC	1,430	1,000	2,430	1,280	1,000	2,280	93.8
11	Niigata	350	350	700	175	175	350	50.0
12	Showa	550	0	550	400	0	400	72.7
13	Toyama	750	0	750	250	0	250	33.3
14	Mizushima	462	0	462	156	0	156	33.8
15	Sumitomo	368	250	618	156	0	156	25.2
16	Sakata	0	700	700	700	0	700	100.0
17	Fukui	0	250	250	0	250	250	100.0
18	Others	5,512	375	5,887	0	0	0	0.0
	Total	66,765	20,700	87,665	10,076	3,750	13,826	15.8

* Including those decided to be constructed

(EPDC, No. 10 in the Table), which was established by the nine major companies and the Central Government, has been the major consumer of domestic coal for power generation. Other power suppliers, which have relatively small capacities, mainly burn oil. The total capacity of the power generation plants, including those under construction and those scheduled to be constructed, is 87,665 MW. The capacity of FGD plants in operation is 10,076 MW. The capacity of plants under construction and being designed is 3,750 MW.

Tokyo Electric, Kansai Electric, and Chubu Electric are the major power companies in Japan. These three companies supply power to the largest cities and industrial complexes in Japan, but have FGD plants of relatively small capacities, with an FGD/power generation ratio of only 1-8%. In polluted areas, these companies prefer to use a clean fuel such as LNG instead of using heavy oil and applying FGD. This is because the regulations on SO_2 and NO_x emissions for these areas may become too stringent to be met by FGD and combustion control in plants using heavy oil. On the other hand, Hokuriku Electric and Chugoku Electric, which have power plants distant from big cities, have larger FGD/power generation ratios.

FGD installations of power companies are listed in Tables 3-3 and 3-4. Before 1973, power companies were not confident about the reliability of FGD. Between 1973 and 1976 they constructed many full-scale FGD plants for utility boilers ranging from 250 to 500 MW, burning high (2.5-3%) sulfur fuel, and using processes which by-produce gypsum. The growth in FGD use was stimulated by the large cost difference between high- and low-sulfur oils and by a shortage of gypsum.

The recent oversupply of gypsum and relatively low cost of low-sulfur fuel oil due to economic depression has

TABLE 3-3. FGD PLANTS OF POWER COMPANIES (I) (FOR OIL-FIRED BOILERS)

Power company	Power station	Boiler No.	Boiler MW	FGD MW	Process developer	Absorbent, precipitant	By-product	Year of completion
Tohoku	Shinsendai	2	600	150	Kureha-Kawasaki	Na_2SO_3, $CaCO_3$	Gypsum	1974
	Hachinohe	4	250	125	Mitsubishi H.I.	CaO	Gypsum	1974
	Niigata	4	250	125	Wellman-MKK	Na_2SO_3	H_2SO_4	1976
	Niigata H.	1	600	150	Mitsubishi H.I.	$CaCO_3$	Gypsum	1976
	Akita	3	350	350	Kureha-Kawasaki	Na_2SO_3, $CaCO_3$	Gypsum	1977
Tokyo	Kashima	3	600	150	Hitachi-Tokyo	Carbon, $CaCO_3$	Gypsum	1972
	Yokosuka	1	265	133	Mitsubishi H.I.	$CaCO_3$	Gypsum	1974
Chubu	Nishinagoya	1	220	220	Wellman-MKK	Na_2SO_3	H_2SO_4	1973
	Owase	1	375	375	Mitsubishi H.I.	CaO	Gypsum	1976
	Owase	2	375	375	Mitsubishi H.I.	CaO	Gypsum	1976
Hokuriku	Toyama	1	500	250	Chiyoda	H_2SO_4, $CaCO_3$	Gypsum	1974
	Fukui	1	350	350	Chiyoda	H_2SO_4, $CaCO_3$	Gypsum	1975
	Nanao	1	500	500	Not decided		Gypsum	1978
Kansai	Sakai	8	250	63	Sumitomo H.I.	Carbon	H_2SO_4	1972
	Amagasaki	2	156	35	Mitsubishi H.I.	CaO	Gypsum	1973
				121	Mitsubishi H.I.	CaO	Gypsum	1975
	Amagasaki	1	156	156	Mitsubishi H.I.	CaO	Gypsum	1976
	Osaka	3	156	156	Babcock-Hitachi	$CaCO_3$	Gypsum	1975
	Osaka	2	156	156	Babcock-Hitachi	$CaCO_3$	Gypsum	1975
	Osaka	4	156	156	Babcock-Hitachi	$CaCO_3$	Gypsum	1976
	Kainan	4	600	150	Mitsubishi H.I.	CaO	Gypsum	1974
Chugoku	Mizushima	2	156	100	Babcock-Hitachi	$CaCO_3$	Gypsum	1974
	Tamashima	3	500	500	Babcock-Hitachi	$CaCO_3$	Gypsum	1975
	Tamashima	2	350	350	Babcock-Hitachi	$CaCO_3$	Gypsum	1976
	Shimonoseki	2	400	400	Mitsubishi H.I.	$CaCO_3$	Gypsum	1976

TABLE 3-4. FGD PLANTS OF POWER COMPANIES (II) (FOR OIL-FIRED BOILERS)

Power company	Power station	Boiler No.	Boiler MW	FGD MW	Process developer	Absorbent, precipitant	By-product	Year of completion
Shikoku	Anan	3	450	450	Kureha-Kawasaki	Na_2SO_3, $CaCO_3$	Gypsum	1975
	Sakaide	3	450	450	Kureha-Kawasaki	Na_2SO_3, $CaCO_3$	Gypsum	1975
Kyushu	Karita	2	375	188	Mitsubishi H.I.	CaO	Gypsum	1974
	Karatsu	2	375	188	Mitsubishi H.I.	$CaCO_3$	Gypsum	1976
	Karatsu	3	500	250	Mitsubishi H.I.	$CaCO_3$	Gypsum	1976
	Ainoura	1	375	250	Mitsubishi H.I.	$CaCO_3$	Gypsum	1976
	Ainoura	2	500	250	Mitsubishi H.I.	$CaCO_3$	Gypsum	1976
	Buzen	1	500	250	Kureha-Kawasaki	Na_2SO_3, $CaCO_3$	Gypsum	1977
	Buzen	2	500	250	Kureha-Kawasaki	Na_2SO_3, $CaCO_3$	Gypsum	1978
EPDC	Takasago	1	250*	250	Mitsui-Chemico	$CaCO_3$	Gypsum	1975
		2	250*	250	Mitsui-Chemico	$CaCO_3$	Gypsum	1976
	Isogo	1	265*	265	Chemico-IHI	$CaCO_3$	Gypsum	1976
		2	265*	265	Chemico-IHI	$CaCO_3$	Gypsum	1976
	Takehara	1	250*	250	Babcock-Hitachi	$CaCO_3$	Gypsum	1977
	Matsushima	1	500	500	Not decided	$CaCO_3$	Gypsum	1980
	Matsushima	1	500	500	Not decided	$CaCO_3$	Gypsum	1980
Niigata	Niigata	1	350	175	MHI	$CaCO_3$	Gypsum	1975
Showa	Ichihara	1	150	150	Showa Denko	Na_2SO_3, $CaCO_3$	Gypsum	1973
	Ichihara	5	250	250	Babcock-Hitachi	$CaCO_3$	Gypsum	1976
Toyama	Toyama	1	250	250	Chiyoda	H_2SO_4, $CaCO_3$	Gypsum	1975
Mizushima	Mizushima	5	156	156	Mitsubishi H.I.	CaO	Gypsum	1975
Sumitomo	Niihama	3	156	156	IHI	$CaCO_3$	Gypsum	1975
Sakata	Sakata	1	350	350	Mitsubishi H.I.	$CaCO_3$	Gypsum	1976
	Sakata	2	350	350	Mitsubishi H.I.	$CaCO_3$	Gypsum	1977
Fukui	Fukui	1	250	250	Not decided	$CaCO_3$	Gypsum	1977

*Coal-fired boilers. Others are for oil-fired boilers.

restricted further construction of FGD plants. However, increased use of coal for power generation will necessitate more FGD plants. A plant for a new 175 MW coal-fired utility boiler is to be completed in 1978; two plants, each for a new 500 MW coal-fired utility boiler, will be completed in 1979. All three use the lime/limestone-gypsum process.

3.1.2 Status of FGD for the Steel Industry

In Japan, iron ore sintering machines are collectively one of the largest SO_2 sources other than boilers. Many desulfurization units have been installed since 1971 to treat steel industry flue gas (Table 3-5). The absorbents used in the FGD units are a lime slurry, used by Kawasaki Steel (MHI process); a limestone slurry, used by Sumitomo Metal (Sumitomo-Fugikasui Moretana process); a slurry of pulverized converter slag, used by Nippon Steel (SSD process); and a calcium chloride solution dissolving lime, used by Kobe Steel (Cal process). All of these plants by-produce gypsum. Nippon Kokan uses ammonia scrubbing to by-produce either ammonium sulfate or gypsum by reacting lime with the sulfate.

By 1977, 22 FGD plants had gone into operation with a total capacity of treating 13,800,000 Nm^3/hr (8,120,000 scfm) of flue gas. This is about one-half the total flue gas from all sintering plants in Japan.

Flue gas from sintering plants is characterized by a high O_2 concentration (12-16%), relatively low SO_2 concentration (200-1,000 ppm), and a dust content rich in ferric oxide. Oxidation of sulfite into sulfate occurs in the scrubbers much more readily than with flue gas from a boiler, because the oxidation is promoted by the high O_2/SO_2 ratio and also by the catalytic action of the ferric oxide.

TABLE 3-5. SO_2 REMOVAL INSTALLATIONS FOR WASTE GAS FROM IRON-ORE SINTERING MACHINES

Steelmaker	Plant site	Gas treated (1,000 Nm^3/hr)	Process	Absorbent	Year of completion	Gypsum (t/year)
Kawasaki Steel	Chiba	120	MHI	CaO	1973	3,600
	Chiba	320	MHI	CaO	1975	13,200
	Chiba	650	MHI	CaO	1976	26,500
	Mizushima	750	MHI	CaO	1974	27,600
	Mizushima	900	MHI	CaO	1975	32,400
	Mizushima	750	MHI	CaO	1977	27,600
Sumitomo Metal	Kashima	880	Moretana	$CaCO_3$	1975	32,400
	Kashima	1,000	Moretana	$CaCO_3$	1976	40,500
	Kashima	1,000	Moretana	$CaCO_3$	1977	40,500
	Wakayama	370	Moretana	$CaCO_3$	1975	14,400
	Kokura	720	Moretana	$CaCO_3$	1976	26,500
Kobe Steel	Amagasaki	175x2	Cal	$Ca(OH)_2$	1976	12,600
	Kobe	375	Cal	$Ca(OH)_2$	1976	12,600
	Kakogawa	1,000x2	Cal	$Ca(OH)_2$	1977	72,000
Nakayama Steel	Osaka	375	Cal	$Ca(OH)_2$	1976	13,500
Nippon Steel	Tobata	200	SSD	Slag	1974	7,200
	Wakamatsu	1,000	SSD	Slag	1976	32,400
Nippon Kokan	Keihin	150	NKK	NH_3, CaO	1971	7,200†
	Fukuyama	760	NKK	NH_3*	1976	12,000†
	Ogishima	1,230	NKK	NH_3*	1977	20,000†

* Ammonia in coke oven gas

† Ammonium sulfate

3.1.3 Status of FGD for Nonferrous Smelters

Major FGD plants at nonferrous metal smelters (copper, zinc, and lead) are listed in Table 3-6. In these smelters, dilute SO_2 gas (1-3% in concentration) is circulated to the sintering machine or roaster to give concentrated SO_2 which is used for sulfuric acid production. More dilute SO_2 streams and sulfuric acid plant tail gas containing 400-2,000 ppm SO_2 are treated by FGD.

FGD plants constructed in 1970 and 1971 use sodium scrubbing to by-produce sodium sulfite for paper mills. Other processes have been used since 1972 because of oversupply of the sulfite. In 1972 and 1973, three plants using magnesium and zinc scrubbing were constructed to recover SO_2 in a concentrated form which is sent to sulfuric acid plants. Most of the plants constructed recently use the wet lime/limestone process to by-produce gypsum.

At most smelters, overall SO_2 recovery by sulfuric acid production and FGD reaches 99%.

3.2 BY-PRODUCTS

3.2.1 By-Product Production and Economics

Desulfurization efforts in Japan have been oriented toward processes that yield salable by-products (Figures 3-1 and 3-2), because Japan is subject to limitations in domestic supply of natural sulfur and its compounds and to limitations in land space available for disposal of useless by-products. About 60% of the SO_2 is converted into salable gypsum, 20% into sodium

TABLE 3-6. MAJOR FGD PLANTS OF LEADING NONFERROUS SMELTERS

Plant owner	Plant site	Gas source	Gas treated (Nm^3/hr)	Process developer	Absorbent	By-product	Year of completion
Shimuru Kako	Muroran	Nickel converter	20,000	TSK	NaOH	Na_2SO_3	1970
Sumiko ISP	Kakogawa	Sintering furnace	60,000	Sumitomo			1970
Sumitomo Mining	Niihama	Nickel smelter	150,000	TSK	NaOH	Na_2SO_3	1970
	Toyo	H_2SO_4 plant	125,000	IHI	NaOH	Na_2SO_3	1971
Dowa Seiko	Amagasaki	Pelletizing	47,000	Dowa Seiko			1970
Nippon Mining	Saganoseki	H_2SO_4 plant	126,000	IHI	NaOH	Na_2SO_3	1970
	Saganoseki	H_2SO_4 plant	120,000	Showa Denko	NaOH-$CaCO_3$	Gypsum	1971
Furukawa Mining	Ashio	H_2SO_4 plant	60,000	IHI	CaO	Gypsum	1972
Onahama Smelting	Onahama	Reverberatory	92,000	MHI	CaO	Gypsum	1972
	Onahama	Reverberatory	120,000	IHI	CaO	Gypsum	1972
	Onahama	Reverberatory	110,000	TSK	MgO	H_2SO_4	1972
	Onahama	H_2SO_4 plant	203,000	IHI	CaO	Gypsum	1972
Mitsui Mining	Hibi	Copper smelter	90,000	Mitsui Mining	MgO	H_2SO_4	1972
	Kamioka	H_2SO_4 plant	48,000	Mitsui Mining	ZnO	H_2SO_4	1972
	Hibi	H_2SO_4 plant	300,000	Mitsui Mining	CaO	Gypsum	1973
Hachinohe Smelting	Hachinohe	Zinc smelter	60,000	Mitsui Mining	ZnO	H_2SO_4	1973
Hibe Kyodo Smelting	Hibi	Smelter	200,000	Mitsui Mining	CaO	Gypsum	1975
Dowa Mining	Okayama	H_2SO_4 plant	300,000	Dowa	$Al_2(SO_4)_3$-$CaCO_3$	Gypsum	1974
Kowa Seiko	Tobata	Copper remover	50,000	IHI	CaO	Gypsum	1975
Mitsubishi Cominco	Naoshima	Lead Smelter	13,000		CaO	Gypsum	1976

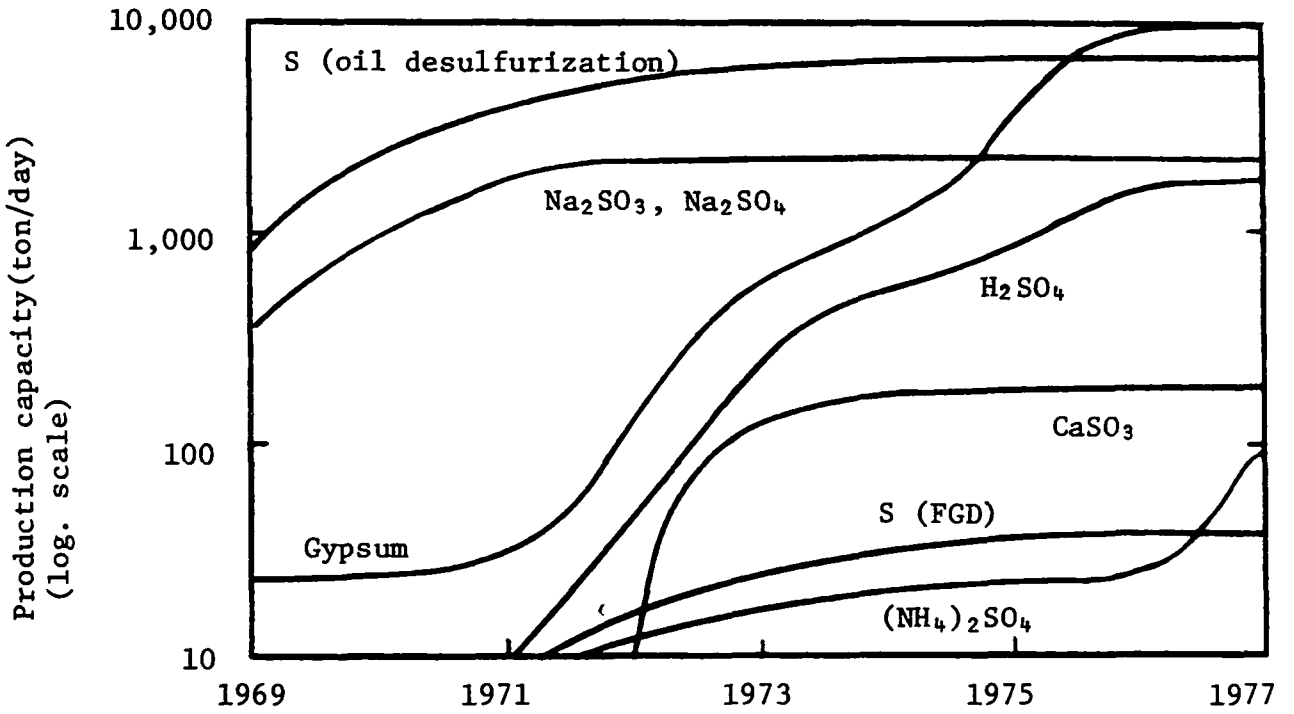

Figure 3-1. Production capacity of desulfurization.

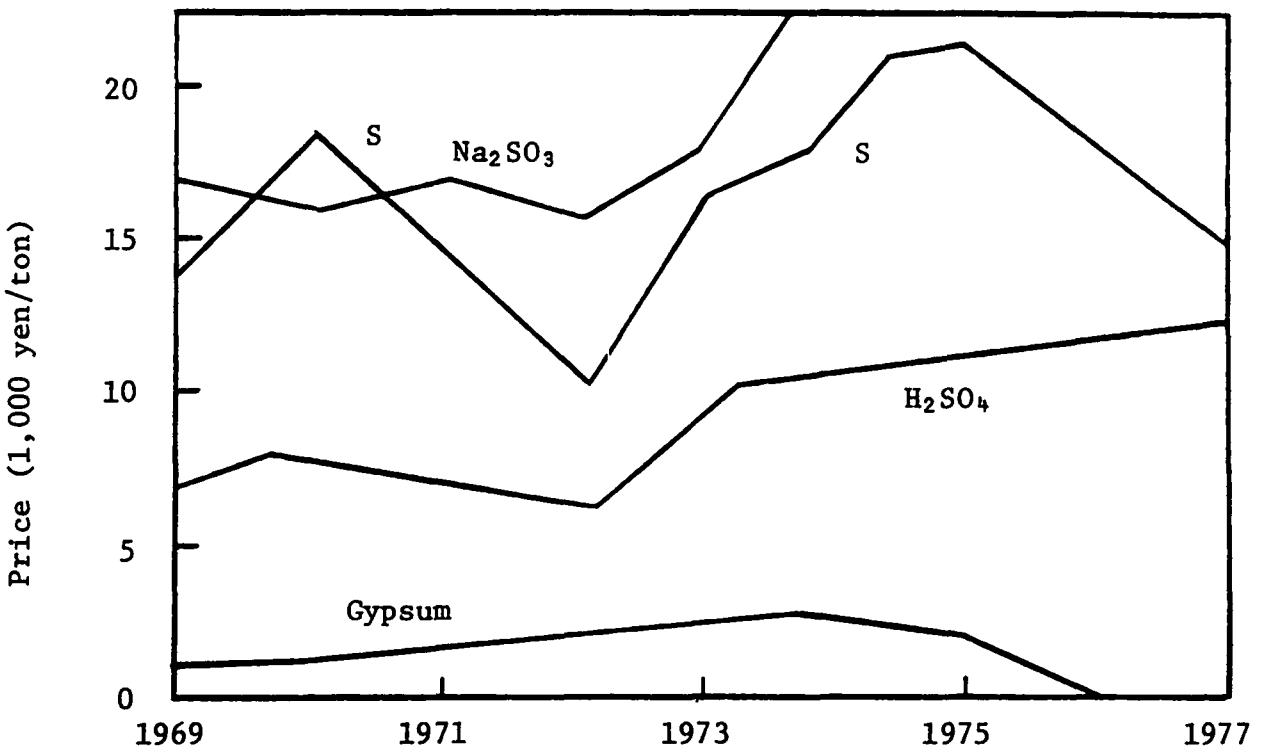

Figure 3-2. Price of by-products.

sulfite, 15% into sulfuric acid, and the rest into waste calcium sulfite and sodium and ammonium sulfates.

Sodium scrubbing to by-produce sodium sulfite for paper mills is the process which first became popular because it is the easiest method of FGD. By-production of sodium sulfate will not increase much in the future because the supply has already filled the demand and because sodium hydroxide, which is used by this method, has become expensive.

By-product gypsum can be grown into fairly large crystals and is useful for wallboard production and as a retarder of cement setting (Figure 3-3). Since 1975, gypsum has been in oversupply due to a decrease in demand by economic depression and to a rapid increase in FGD plants producing gypsum. The selling price of most by-product gypsum, including gypsum from phosphoric acid production and other sources as well as FGD, has dropped to zero. The phosphogypsum was sold for about 3,000 yen/ton before 1974. It compensated for the relatively high cost of sulfuric acid used in the Japanese phosphoric acid industry. As a result of the drop in the price of gypsum, import of phosphoric acid has begun and a few smaller plants have been shut down.

Sulfuric acid has been produced by the Wellman-Lord, magnesium and zinc scrubbing processes. The production will not increase much because demand for sulfuric acid has leveled off due to the decrease in wet process phosphoric acid production caused by the oversupply of gypsum.

Elemental sulfur has been produced at four oil refineries by introducing recovered SO_2 into existing Claus furnaces. For SO_2 recovery, the Wellman-Lord, Shell and magnesium

scrubbing processes have been used. Since large quantities of elemental sulfur are recovered by hydrodesulfurization of heavy oil, production of elemental sulfur at power plants by FGD may not be competitive unless an economical process is developed.

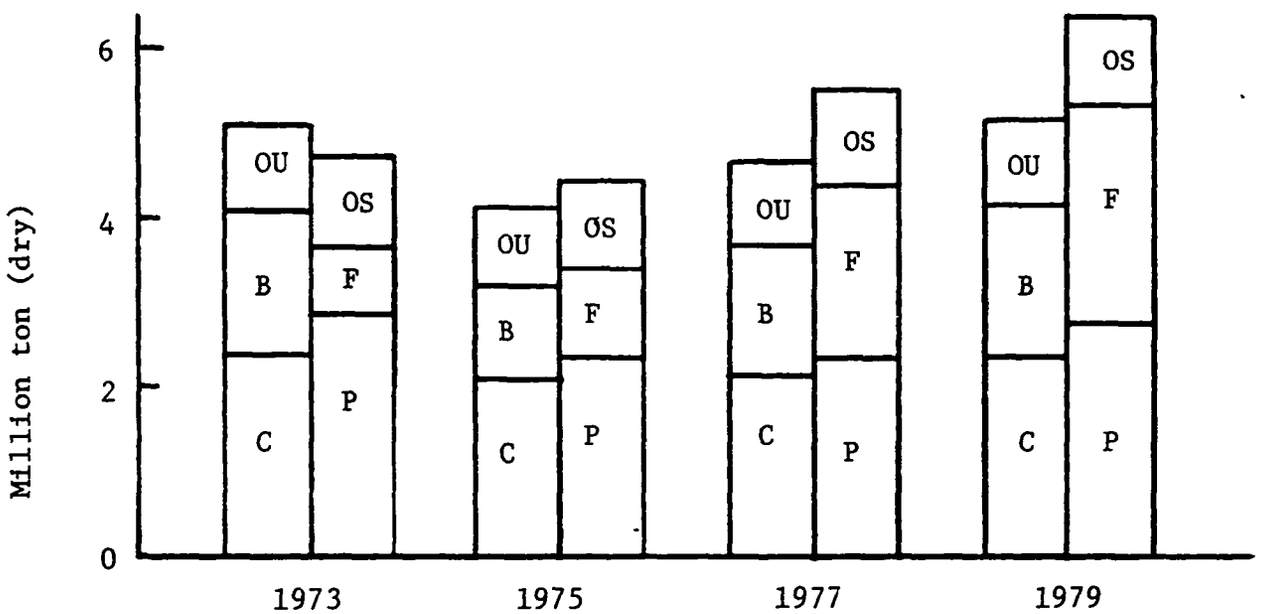

Demand: C: Cement B: Board OU: Other uses
Supply: P: Phosphogypsum F: FGD OS: Other sources

Figure 3-3. Demand for and supply of gypsum.

The production of ammonium sulfate increased considerably in a recent year due to the completion of two ammonia scrubbing plants of Nippon Kokan.

Throwaway calcium sulfite sludge has been produced at the Omuta plant, Mitsui Aluminum. The sulfite slurry is discharged into a big pond and the supernatant is recycled to the scrubber. In two other smaller plants, the slurry is filtered and discarded.

3.2.2 Quality and Use of FGD Gypsum

The FGD by-product gypsum has a crystal size of 50-200 microns in length, 20-50 microns in width, and 10-20 microns in thickness, and is easily centrifuged to less than 10% moisture. It is useful for wallboard and as a cement setting retarder. Examples of the composition of the gypsum and the strength of the calcined product (β form hemihydrate) are shown in Table 3-7. The gypsum is strong enough not only for wallboard but also for plaster. However, except for a few products derived from flue gases from oil-fired boilers equipped with high-efficiency electrostatic precipitators, the gypsum is not usually used for plaster because of a dark color due to fly ash and unburned carbon. A product from the tail gas of a sulfuric acid plant of Dowa Mining Co. has been sold as gypsum for molding at ¥3,000/ton. By-product gypsum from most other sources has been given away, sometimes with the delivery charge paid by the FGD plant owner.

Unlike phosphogypsum, a by-product of wet process phosphoric acid, FGD gypsum does not contain impurities which affect quality such as fluorine and phosphoric acid. Gypsum containing less than about 5% fly ash is useful for wallboard. Gypsum containing 10-20% fly ash from coal such as the product at the Isogo plant, EPDC, is still useful for cement setting retarder.

Gypsum by some of the indirect or modified lime/limestone processes contains a relatively large amount of sodium, magnesium, or chlorine, but these impurities are within 0.5% in most cases and do not affect quality. This gypsum is usually filtered and water-washed in a centrifuge to reduce the impurities.

TABLE 3-7. PROPERTIES OF FGD GYPSUM
(OIL-FIRED BOILERS WITH ELECTROSTATIC PRECIPITATOR)

	A	B	C	D	E	F
Chemical composition of dried gypsum (%)						
SiO_2	0.4	0.6	0.6	0.4	0.2	0.7
Al_2O_3	0.1	0.2	0.2	0.2	0.1	0.2
CaO	32.2	32.2	30.7	32.6	32.5	32.4
MgO	0.1	0.1	0.2	0.2	0.1	0.1
SO_3	46.0	46.1	46.1	45.9	46.1	46.0
Water of crystallization	20.6	19.9	19.7	19.8	19.6	18.9
Properties of calcined product						
Fineness (cm^2/gram)	3,020	3,030	3,020	3,020	3,040	3,020
Setting time (min.)						
Start	176	161	108	144	175	168
End	252	259	176	207	226	235
Mortar strengh (kg/cm^2)						
Bending strength						
3 days	33.5	36.2	36.7	33.4	26.1	34.0
7 days	48.5	52.2	49.5	47.4	50.2	51.9
28 days	68.9	73.2	70.8	70.4	72.0	71.5
Compressive strength						
3 days	138	142	149	136	152	131
7 days	227	250	241	237	254	237
28 days	423	443	428	420	429	399

It is desirable that the gypsum contain less than about 10% moisture so that it will flow smoothly from a hopper to a cement mill or so that it will require less energy for drying when used for wallboard or plaster. Gypsum containing a considerable amount of calcium sulfite has much moisture after being centrifuged and is not suitable for these uses. Calcium sulfite itself, however, if it has a low moisture content, is useful as a retarder of cement setting.

Since gypsum is now in oversupply, tests have been made to develop new uses. Tests are also in progress to produce new forms of gypsum, such as fiber-like crystals or α-form hemihydrate produced by oxidation of calcium sulfite in the presence of a catalyst such as a surface active agent.

3.3 WASTEWATER AND ITS TREATMENT

3.3.1 Wastewater

Most Japanese FGD processes purge wastewater, as shown in Table 3-8. The water is purged to prevent the accumulation of impurities, especially chloride, in the circulating liquor. The removal of chloride in the purge stream is illustrated in Figure 3-4. Chlorine is derived from fuel and process water. It promotes stress corrosion of steel when the liquor contains more than 1 ppm of oxygen, as shown in Figure 3-5. Because of the higher chloride concentration in coal, FGD systems for coal-fired boilers normally purge larger amounts of wastewater than do those for oil-fired boilers.

Plants using the Kureha-Kawasaki process do not normally purge any water because the scrubber liquor is very low in oxygen and, therefore, does not promote stress corrosion.

TABLE 3-8. WASTEWATER FROM FGD SYSTEMS

Process	User	Plant site	MW	Inlet SO_2 ppm	Waste water t/hr(A)	Gypsum, t/hr Solid (B)	Gypsum, t/hr Moisture (C)	Water ratio $\frac{A+C}{A+B+C}$	Water ratio $\frac{kg}{MWhr}$
Mitsubishi H.I.	Chubu Elec.	Owase	375	1,600	3	15.0	1.5	0.23	11
Babcock-Hitachi	Chugoku Elec.	Tamashima	500	1,480	4	19.0	1.9	0.24	11
Mitsui-Chemico	EPDC	Takasago	500	1,500	15	17.4	1.7	0.49	30
Babcock-Hitachi	EPDC	Takehara	250*	1,700	12	11.2	1.1	0.54	48
IHI-Chemico	EPDC	Isogo	530	400	20	9.0	0.9	0.71	36
Kureha-Kawasaki	Shikoku Elec.	Sakaide	450	1,270	0	14.5	1.3	0.08	3
Showa Denko	Showa Denko	Ichihara	170	1,400	5	5.5	0.5	0.50	29
Chiyoda	Hokuriku Elec.	Fukui	350	1,800	15	15.5	1.5	0.51	43
Dowa	Naikai	Tamano	28	1,500	0.03	1.1	0.1	0.11	4
Kurabo			40	1,480	0	1.5	0.15	0.09	3
Kobe Steel	Nakayama Steel	Funamachi	(130)	200	0	0.7	0.08	0.10	1
Kawasaki H.I.	Unitika	Okazaki	68	1,400	0	2.4	0.26	0.10	3
Nippon Kokan	Nippon Kokan	Ogishima	(380)	350	10	-	-	-	24
Wellman-MKK	Chubu Elec.	Nishinagoya	220	1,600	4	-	-	-	17
Chemico-Mitsui	Idemitsu Kosan	Chiba	160	2,850	0.1	-	-	-	1

* Coal-fired system

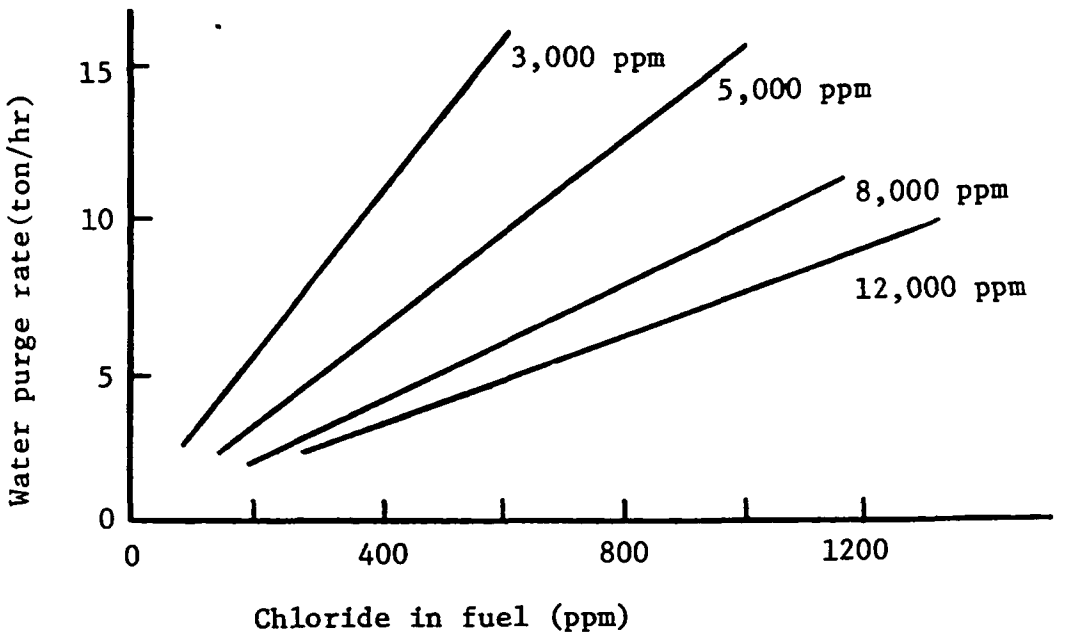

Figure 3-4. Relationship of the chloride concentration in the purge stream to the purge rate and the chloride content of the fuel (250 MW boiler, 1,500 ppm SO_2, 10% moisture in by-product gypsum).

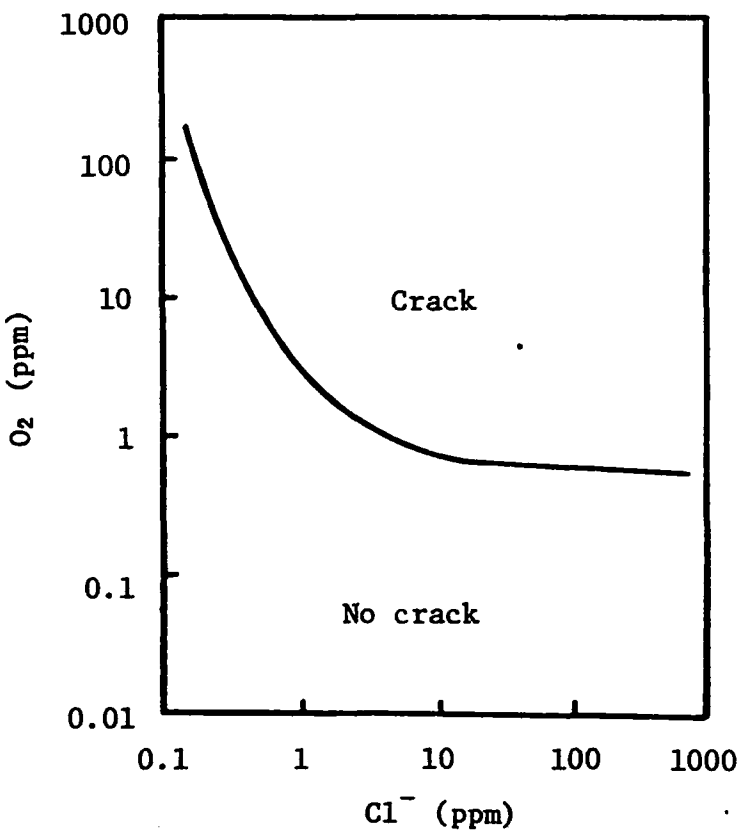

Figure 3-5. O_2 and Cl concentrations in solution and stress corrosion.

Chloride concentration of the liquor in these plants has reached 4,000 ppm, and the amount of chloride leaving the system as part of the liquid content of gypsum which contains 6-8% moisture has become equal to the amount going into the system. Other processes free from wastewater include the Kobe Steel process, which uses a calcium chloride solution dissolving lime as the absorbent, and the Kawasaki magnesium gypsum process. Both use corrosion-resistant materials for construction.

Even the dry processes are not free from wastewater. The Tokyo Electric, Hitachi, and the Shell processes produce relatively large amounts of wastewater because they use wet treatment in the regeneration steps.

Many states in the U.S.A. prohibit the discharge of wastewater but allow the discarding of calcium sulfite sludge, which usually contains 50-60% water after filtration (water ratio 0.5-0.6).

Although most Japanese processes purge some wastewater, the amount is about equal to or less than the amount purged in the U.S. with sludge disposal. The Chiyoda process, however, normally purges a relatively large amount of water to prevent corrosion because Chiyoda uses sulfuric acid saturated with oxygen as the absorbent. It is possible to reduce the wastewater from this process by using construction materials having greater corrosion resistances.

3.3.2 Wastewater Treatment

Wastewater is treated to meet the regulations. The treatment in most processes is simple, consisting principally of neutralization and filtration. The Wellman-Lord process,

however, requires extensive treatment including ozone oxidation to decompose polythionates, such as $Na_2S_2O_6$, formed in the process. After being treated, the wastewater normally has a pH of 6-8.5, contains 5-20 mg/liter of suspended solids (SS) and less than 10 mg/liter of chemical oxygen demand (COD). It does not adversely affect the environment.

The formation of a considerable amount of polythionates in the Wellman-Lord process is due to the thermal treatment of the absorbing liquor. It has been found, however, that a detectable amount of dithionate $Na_2S_2O_6$ also forms in some FGD processes which do not include thermal treatment. The dithionate does not produce a biological oxygen demand (BOD), and therefore, may not adversely affect the environment. It does, however, produce a COD consuming potassium permanganate. In a few FGD plants, therefore, wastewater is treated by means of ion exchange to remove the dithionate in order to maintain COD at a limited level.

FGD scrubber liquors from oil-fired utility boilers usually contain small amounts of ammonia. Ammonia is added to flue gas exiting from an air preheater in order to prevent corrosion of the electrostatic precipitator. Normally 2 to 2.5 moles of NH_3 are added per mole of SO_3. Powdery ammonium sulfate, which is caught by the precipitator, is formed. The gas leaving the precipitator contains less than 10 ppm NH_3. This NH_3 is absorbed in the scrubbing liquor.

Ammonia concentration of the scrubber liquor is usually below 1,000 ppm. The ammonia is purged with wastewater. In the Owase plant, Chubu Electric, the wastewater is treated with lime and air stripping to remove ammonia before it is purged to the sea, because regulations on wastewater in the area are quite stringent.

3.4 MIST ELIMINATION

The chevron type mist eliminator has been the most widely used device for mist elimination. However, this eliminator normally causes a 30-40 mm H_2O pressure drop and functions poorly with mists smaller than 30 microns. Eliminators with a smaller pressure drop, such as the pipe with fin type and the Tellerette packing type, have been used but their mist removal efficiency may not be better.

To attain better efficiency, the Lamellar and Euroform types (Figure 3-6) were recently introduced. These can remove mist as small as 12 microns at a relatively low pressure drop (Figures 3-7 - 3-9). However, they are more costly and more vulnerable to plugging and scaling than is the chevron type and, thus, require better washing. In the Owase plant, Chubu Electric, the chevron type eliminator is used in the first stage to remove most of the mist and the Euroform type is used in the second stage to collect smaller particles.

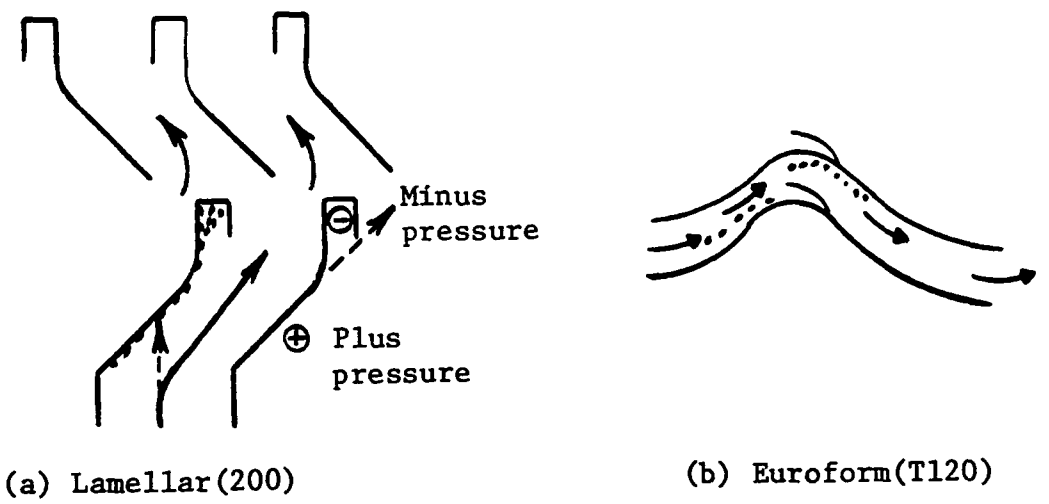

Figure 3-6. Improved types of mist eliminators.

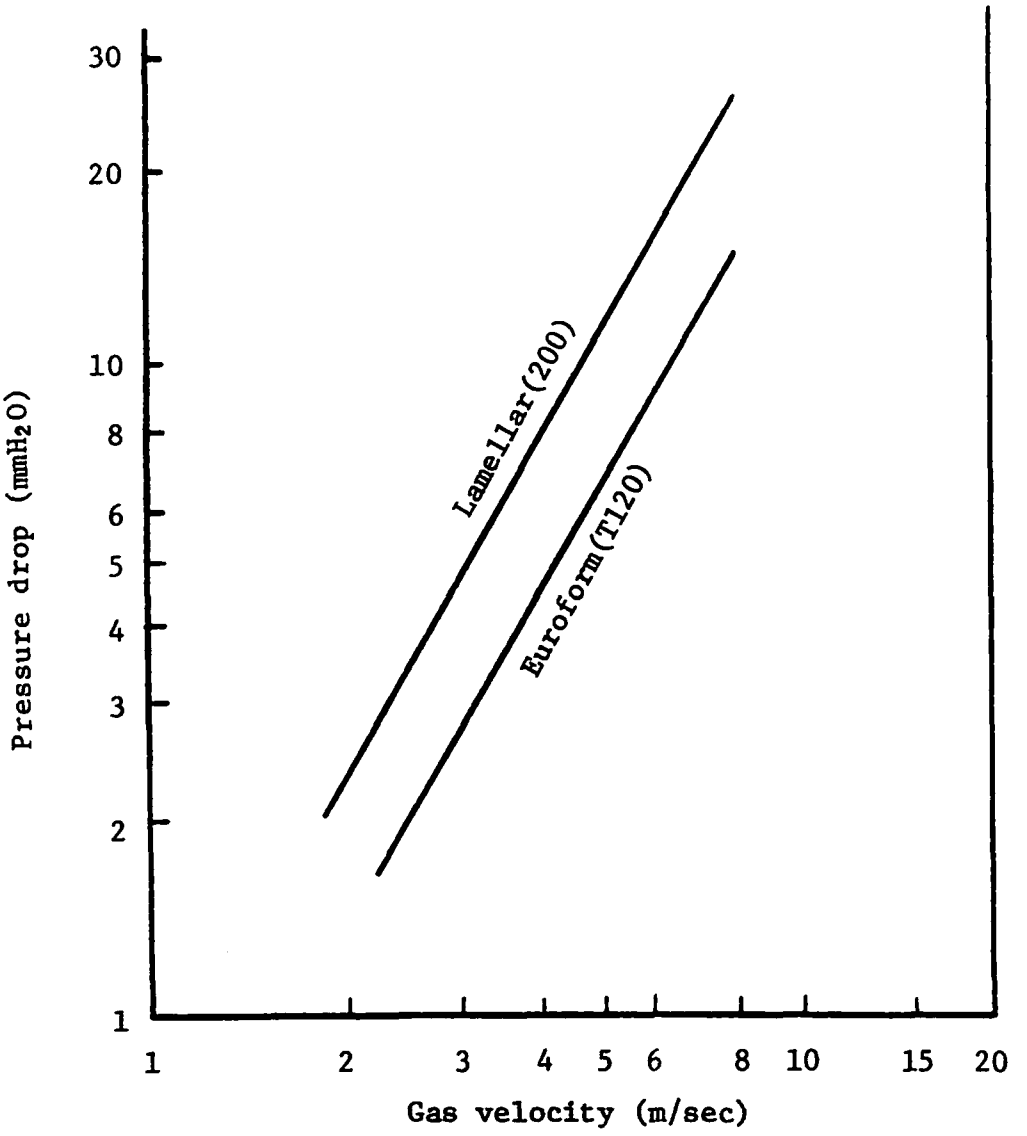

Figure 3-7. Gas velocity and pressure drop.

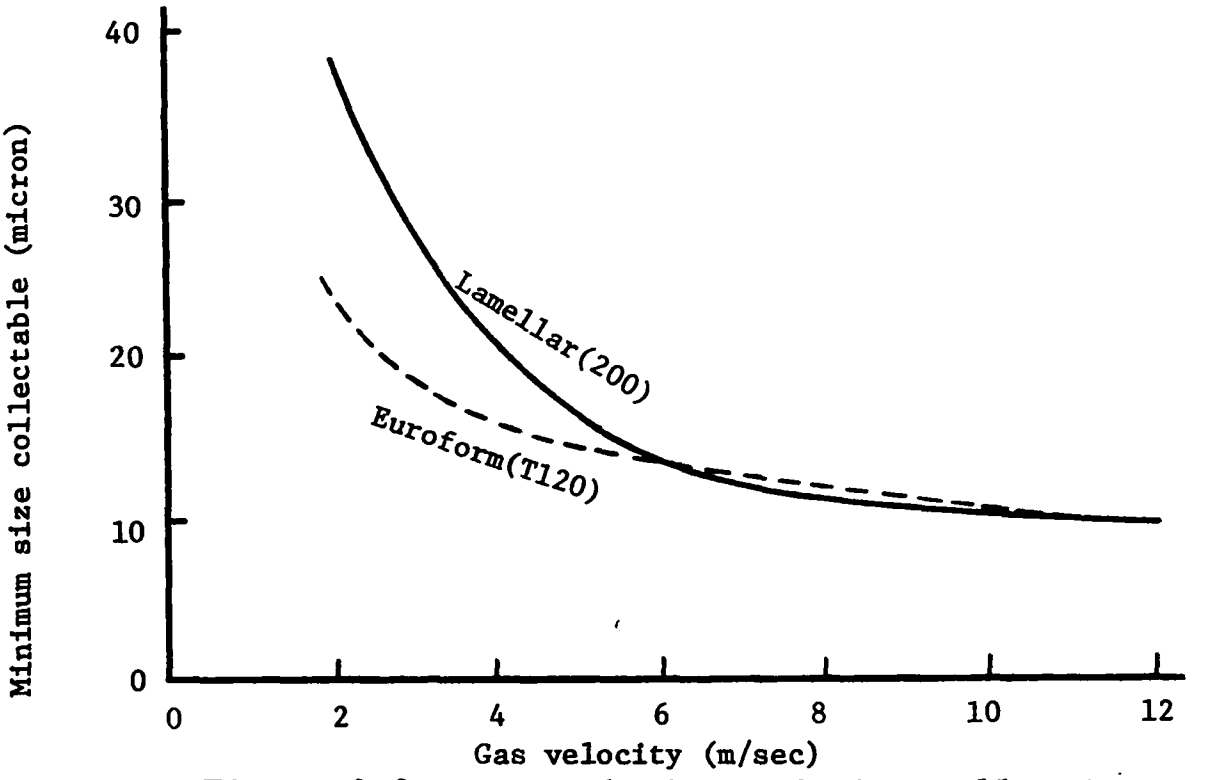

Figure 3-8. Gas velocity and mist collection.

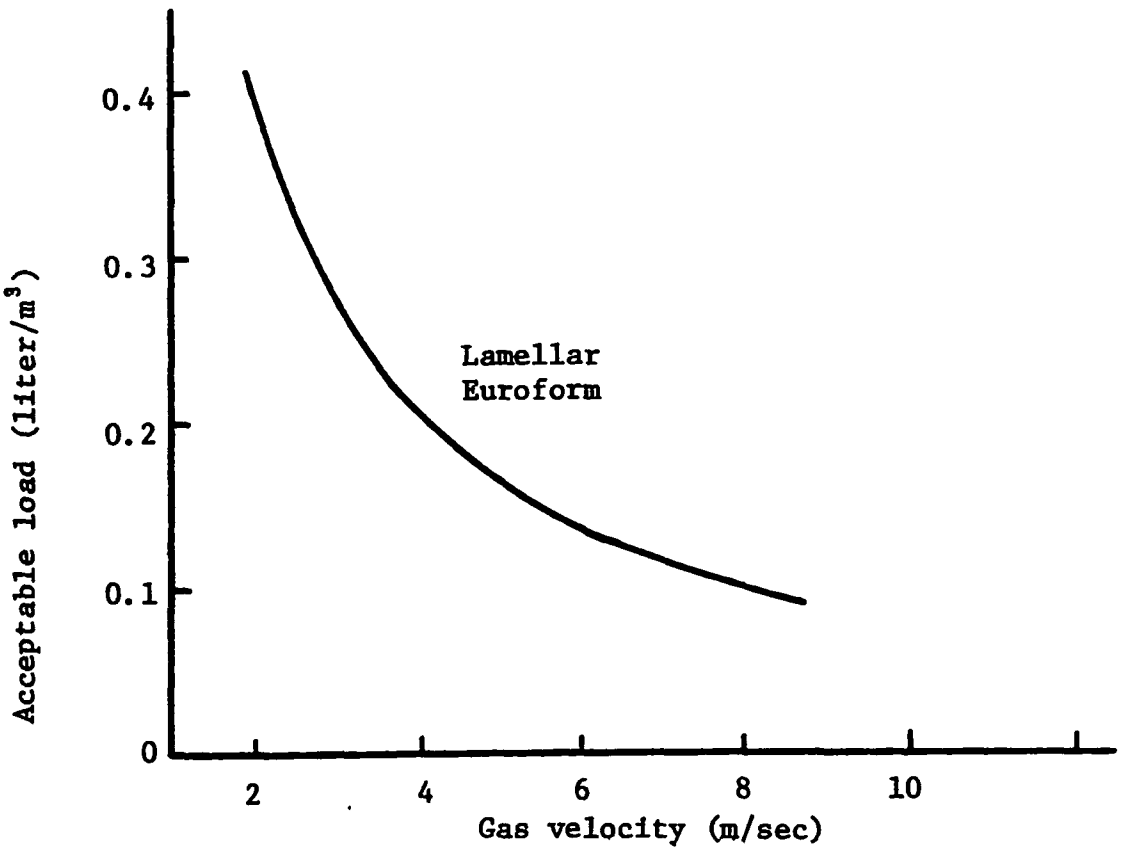

Figure 3-9. Gas velocity and acceptable mist load.

SO_3, usually present in a cooled flue gas in the form of very fine H_2SO_4 mist, is not easily caught by a scrubber or a mist eliminator. The SO_3 removal efficiency by a usual FGD system is estimated at 40-70%. Tests with a mist eliminator using a glass fiber cloth filter have shown that more than 90% of the SO_3 can be removed. An associated high pressure drop, however, prevents large-scale commercial applications.

Recently, Nippon Kokan began operating a large ammonia scrubbing plant with a wet type electrostatic precipitator after the scrubber. The precipitator eliminates virtually all of the particulates (dust and mists) and prevents the formation of a visible plume (see Section 6.2).

3.5 GAS REHEATING

3.5.1 Reheating by Afterburning

The temperature of boiler flue gas which has passed through an air preheater and electrostatic precipitator normally ranges from 140 to 160°C. After scrubbing in the wet FGD processes, the gas temperature usually drops to 55-60°C. In most plants, flue gas is reheated to 90-140°C by afterburning low-sulfur oil.

In the U.S. flue gas is usually reheated to about 80°C to prevent the condensation of acidic liquor, which causes stack corrosion and an occasional acid rain. A higher reheating temperature is used in Japan mainly to eliminate the formation of a visible plume. Another reason is that the K-value control of the Central Government (see Section 1.4.2) allows a larger amount of SO_2 to be emitted at a higher gas temperature (higher effective stack height).

Although afterburning is the easiest method of reheating, the oil requirement reaches 3-4% of that used for the boiler. Afterburning not only is fairly costly but adds SO_2, NO_x and dust to the cleaned gas. Moreover, recent total mass regulations restrict the amount of SO_2 regardless of the gas temperature. In such a situation, the reheating temperature at many plants has been lowered to 90-110°C, resulting in a considerable energy saving.

3.5.2 Steam-Gas Heating

A few companies have made tests on reheating the gas by using a gas-steam heat exchanger. Corrosion of the heat exchanger tubes is a major problem, particularly when the scrubber liquor is rich in chlorine. The first commercial steam-gas heater was constructed recently by Mitsubishi Heavy Industries at the Shimonoseki plant, Chugoku Electric, with steam tubes made of a high nickel alloy.

3.5.3 Gas-Gas Heating

In principle, a gas-gas heat exchanger, as shown below, is very useful because it not only saves energy but also reduces the consumption of cooling water by lowering inlet gas temperature. Commercial use of the heat exchanger, however, has been difficult because of the corrosion of the exchanger and the deposition of solids within it. To cope with the problems, it is necessary to use a corrosion resistant material and to minimize the mist from the FGD system by using a highly efficient mist eliminator.

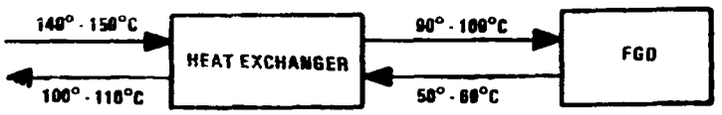

79-1172-1

Tests with a Ljungstrom type heat exchanger with a capacity of treating 10,000 Nm^3/hr gas have been carried out since January 1975 by Gadelius Co. (Japan) jointly with Tohoku Electric at the Shinsendai plant and with Electric Power Development Co. at the Takasago plant. The Shinsendai plant treats flue gas from an oil-fired boiler by the Kureha-Kawasaki sodium-limestone gypsum process. The Takasago plant treats flue gas from a coal-fired boiler by the Mitsui-Chemico limestone-gypsum process.

A flowsheet of the test plant at Shinsendai plant is shown in Figure 3-10. A portion of gas, about 10,000 Nm^3/hr, is passed through a rotating type heat exchanger (Ljungstrom). Results of tests at the Shinsendai plant with two kinds of heat exchange elements, NF-6 and NF-3.5, are shown in Table 3-9 and Figure 3-11. Both elements are enamel-coated for corrosion prevention. The element NF-3.5 has a finer structure and operates with a better heat exchange efficiency and a larger pressure drop.

The amount of particulates in the test facility flue gas was small, as shown in Table 3-10. A soot blow was applied intermittently from both the high and low temperature sides. After 4,000-6,100 hour tests, slight deposits were observed, mainly in the intermediate zone where the soot blow was not effective (Figure 3-11). The deposit was slight and did not increase the pressure drop appreciably. The smooth surface of the enamel coating and the soot blow were fairly effective for

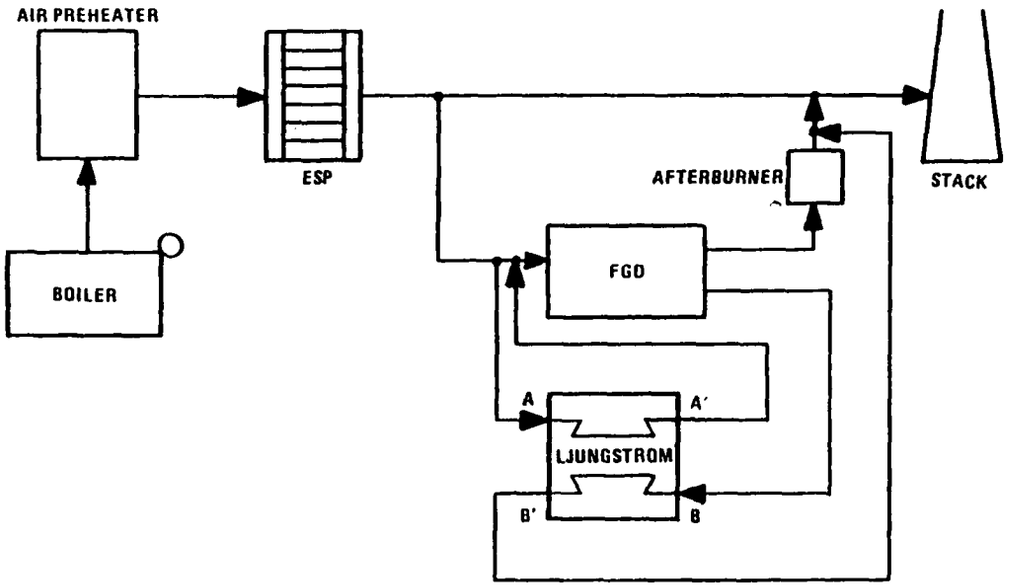

Figure 3-10. Pilot plant of Ljungstrom heat exchanger. (10,000 Nm^3/hr)

TABLE 3-9. TEST RESULTS OF LJUNGSTROM HEAT EXCHANGERS

	NF-6		NF-3.5	
	Designed	Actual	Designed	Actual
Gas flow rate (Nm^3/hr)				
A→A'	10,000	7,340	10,000	9,505
B→B'	10,000	9,890	10,000	10,415
Gas temperature (°C)				
A	134	137	134	136
A'	82	81	74	79
B	56	65	56	64
B'	103	104	111	110
Pressure drop (mmH_2O)				
A→A'	45	25	100	90
B→B'	40	36	95	95

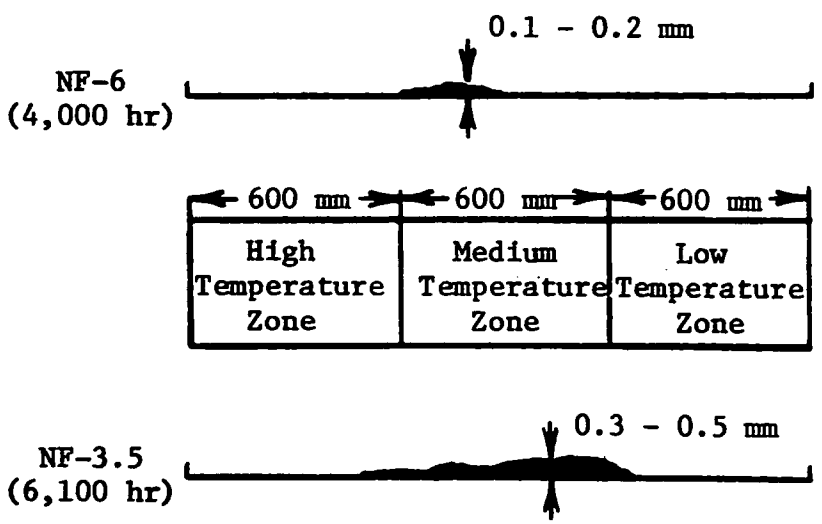

Figure 3-11. Deposits on elements in the Ljungstrom heat exchanger.

reducing the deposit. Corrosion was not observed. The deposit could be removed by a water wash.

TABLE 3-10. EXAMPLES OF PARTICULATE CONTENT OF THE LJUNGSTROM TEST FLUE GAS (mg/Nm^3)

Measuring point	During normal run		During soot blow	
	1	2	1	2
A	2.9	3.6	2.7	3.0
A'	2.2	3.8	8.7	11.3
B	2.5	4.0	2.6	3.1
B'	2.6	2.2	4.1	4.2

3.5.4 Cost Comparison of Gas-Gas Heating and Afterburning[9]

Based on the above results, comparisons were made of the costs for reheating flue gas from a 350 MW oil-fired boiler to 140°C. Three methods were compared:

1) Afterburning using 0.6% sulfur oil.

2) Heating by the Ljungstrom heat exchanger to 100°C (pressure drop 111 mmH_2O) and then by afterburning.

3) Heating by the Ljungstrom heat exchanger to 110°C (pressure drop 124 mmH_2O) and then by afterburning.

The annualized costs are compared in Table 3-11. The table indicates that a considerable saving is achieved with a Ljungstrom heat exchanger, particularly in case (2). It also implies that if flue gas is reheated to 100°C, use of a

Ljungstrom heat exchanger alone can be much more economical than afterburning.

TABLE 3-11. INVESTMENT AND ANNUALIZED COSTS FOR REHEATING (Millions of Yen)

	Method of reheat		
	(1)	(2)	(3)
Investment cost	234	1,350	1,837
Annualized cost			
Fixed cost*	42	244	332
Fuel cost	751	302	229
Utility cost	0	53	62
Maintenance	7	41	55
Other	13	21	25
Total annual cost	813	661	703

* 7 years depreciation, 8% interest

3.5.5 Commercial Application of a Ljungstrom Heat Exchanger for FGD

Although the tests have shown good results, it is possible that considerable corrosion and deposition may occur in a commercial heat exchanger when the inlet hot gas is rich in SO_3 and the cold gas after FGD is rich in mist. The first commercial Ljungstrom heat exchanger has been in operation at the Ogishima plant, Nippon Kokan. It is installed in an ammonia scrubbing FGD system with a capacity of treating 1,120,000 Nm^3/hr flue gas from an iron ore sintering machine. At this plant, the FGD outlet gas is first passed through a wet electrostatic precipitator to eliminate ammonium sulfate-sulfite plume. Virtually all of the mist and dust in the gas are removed before the heat exchanger. The Ljungstrom unit has had trouble-free operation (see Section 6.2).

There is no definite plan yet to install a Ljungstrom on a commercial FGD system for flue gas from an oil-fired boiler. On the other hand, it has been decided to use Ljungstrom heat exchangers for new wet lime/limestone-gypsum process plants for three coal-fired boilers to be constructed in 1979 and 1981 (Table 4-5). Comparisons of test results with flue gases from oil- and coal-fired boilers have shown that the solid deposit with flue gas from coal is much softer than that with flue gas from oil and can be removed by soot blowing. The flue gas from coal contained 100-200 mg/Nm^3 of fly ash when introduced into the Ljungstrom while the gas from oil contained less than 10 mg/Nm^3. The fly ash from coal seems to make the deposit soft and easy to remove. The corrosion problem may also be less serious with coal because the flue gas usually contains less SO_3 than does that from oil.

3.6 FGD OPERATION AND OPERABILITY

3.6.1 Operation of Gas Sources

Most of the utility and industrial boilers are operated for 11 months and then undergo maintenance for about a month. During the 11 months, some of them stop a few times for short durations. Utility boilers operate at full load in the daytime and about half load at night, while industrial boilers are operated at a constant load. Many of the FGD systems for utility boilers are equipped with an automatic control system to meet the load fluctuation.

Sintering machines of steel producers and nonferrous smelters operate continuously for one or two months and then stop for a few days for maintenance. The gas volume does not fluctuate much during operation, while the SO_x concentration sometimes varies considerably.

SO_x concentration of the gas from boilers to be treated by FGD is usually between 600 and 2,000 ppm, while that of a gas from iron ore sintering machines ranges from 300-500 ppm. The gas for FGD at smelters ranges in SO_x concentration from 400 to 20,000 ppm.

When an FGD system has to be shut down because of serious problems, oil-fired boilers immediately change to a low-sulfur oil and bypass the flue gas. This allows them to operate continuously. Other gas sources usually have to be shut down if the scrubber operation stops for longer than a certain period of time.

3.6.2 Bypass Systems

Configurations of three gas bypass systems are shown in Figure 3-12. Some plants have an open bypass system, no damper in the bypass duct. During normal FGD operation with these systems, a small portion of gas discharged from the FGD system is recycled to the FGD system. If the FGD system is shut down, the damper to the FGD system is closed and flue gas is passed through the bypass without delay.

Other plants have a damper in the bypass. Many plants, however, keep these dampers open. The resulting system operates the same as the open bypass system. If the dampers in a bypass are kept closed, they cool on one side and are apt to corrode due to the condensation of an acidic liquor. Corrosion causes gas leakage or prevents smooth movement in the event of an emergency.

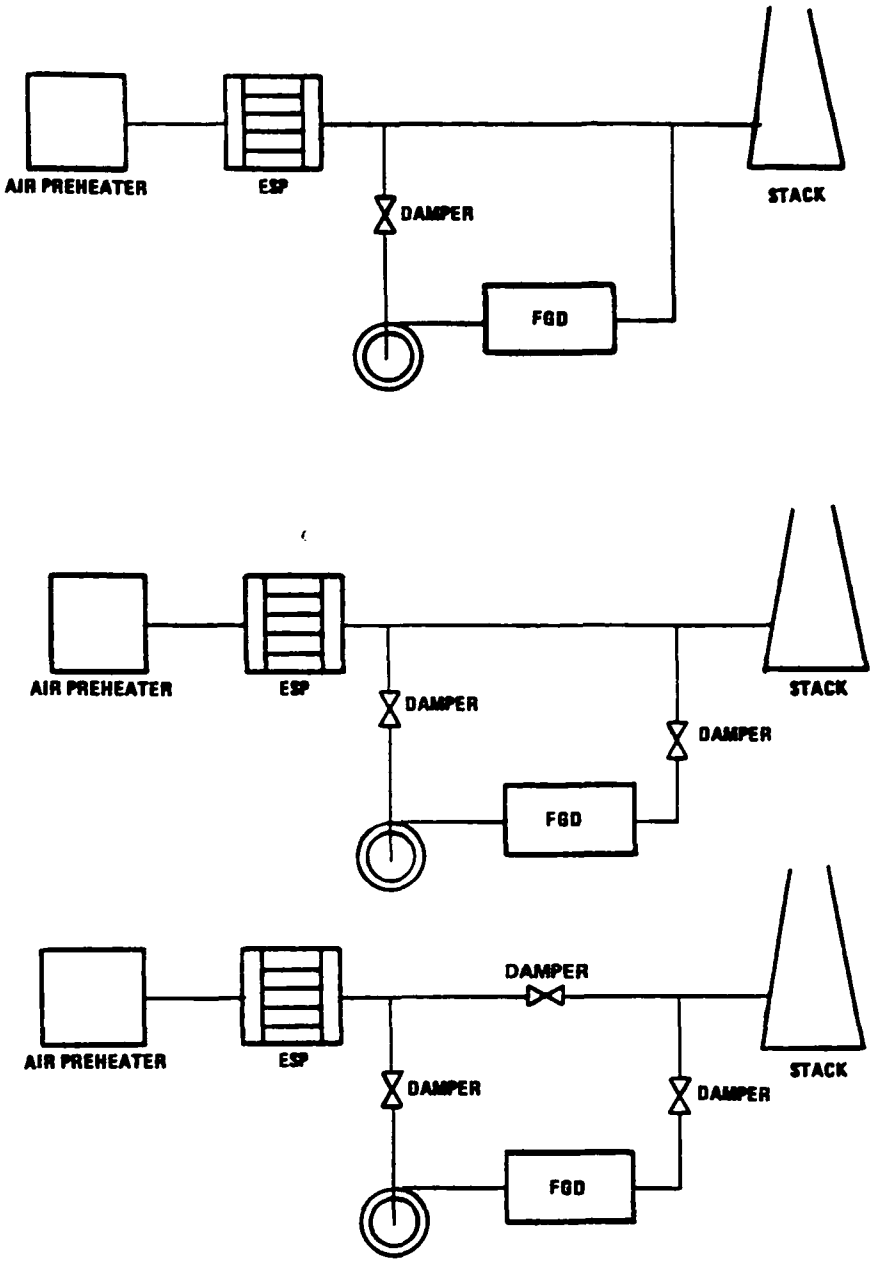

Figure 3-12. Bypass systems (ESP: Electrostatic precipitator, FGD: Flue gas desulfurization, F: Fan).

3.6.3 Operability

Operability is defined as the percent of desired FGD operation time in which the FGD system is operable. As shown in Table 3-12, most FGD plants have an operability of over 97%. The data presented as operability in Table 3-12 is an approximation based on the percent of boiler operation time in which the FGD system is operating. This number may be equal to or greater than the true operability. For gas sources in which the boiler operation time is equal to the desired FGD operation time, the operability presented in Table 3-12 is equal to the true operability. This is the case for oil-fired boilers, which can operate continuously, in spite of FGD system problems, by switching to a low-sulfur fuel. Other gas sources, such as coal-fired boilers and sintering machines, however, may have to shut down when their FGD system is shut down. Boiler operation times for these sources are less than the desired FGD system operation times. Therefore, the operabilities as presented in Table 3-12 for these gas sources are greater than the true operabilities. For example, the operability as presented in Table 3-12 for the Takasago plant, Electric Power Development Company, is 97.9%, while the true operability is 97.0%.

Three plants in the table have an operability of 100%. This does not mean the plants have had no problem at all. Minor problems can be solved without stopping FGD system operation. For example, most of the plants have a standby pump. A pump can be replaced during the FGD operation. Corrosion, scaling, plugging, and so on can occur to some extent. If those are controlled under a certain level, however, the FGD plant can be operated continuously until the scheduled shutdown of the gas source.

TABLE 3-12. OPERATION HOURS AND FGD OPERABILITY IN PERIOD OF OPERATION

Plant owner	Plant site	Gas source	Process	FGD capacity (MW)	Operation (hr/yr) Boiler(A)	Operation (hr/yr) FGD(B)	Operability (B/A) x 100	Inlet SO_2 (ppm)	Year completed
Lime-limestone process									
Chubu Electric	Owase (1)	UB†	MHI	375	7,320	7,171	98.0	1,600	1976
Chubu Electric	Owase (2)	UB†	MHI	375	7,565	7,485	98.9	1,600	1976
Kyushu Electric	Kanda	UB†	MHI	188	7,420	7,390	99.6	800	1974
Kyushu Electric	Karatsu	UB†	MHI	240	7,271	7,246	99.7	530	1976
Electric P.D.C.	Takasago‡	UB†	Mitsui-Chemico	250	8,180	8,010	97.9§	1,500	1975
Mitsui Aluminum	Omuta	IB#	Chemico-Mitsui	156	8,244	8,232	99.9	2,300	1972
Mitsui Aluminum	Omuta	IB#	Mitsui-Chemico	175	8,040	8,040	100.0	2,300	1975
Sumitomo Metal	Kashima	SM**	Sumitomo-Fujikasui	(330)	8,285	8,285	100.0	500	1976
Indirect or modified lime-limestone process									
Shikoku Electric	Sakaide	UB†	Kureha-Kawasaki	450	7,441	7,336	98.6	1,270	1975
Hokuriku Electric	Fukui	UB†	Chiyoda	350	7,044	7,044	100.0	1,800	1975
Showa Denko	Ichihara	IB#	Showa Denko	150	7,885	7,775	98.6	1,400	1973
Unitika	Okazaki	IB#	Kawasaki	67	8,232	8,160	99.1	1,400	1975
Naikai Salt	Tamano	IB#	Dowa	28	8,001	7,969	99.6	1,500	1976
Nippon Kokan	Keihin	SM**	Nippon Kokan	(50)	8,202	8,098	98.7	350	1972
Nakayama Steel	Kobe	SM**	Kobe Steel	(125)	8,419	8,259	98.1	200	1976
Regenerable process									
Idemitsu Kosan	Chiba	IB#	Chemico-Mitsui	170	8,016	7,887	98.4	2,850	1975
Chubu Electric	Nishinagoya	UB†	Wellman-MKK	220	7,247	7,090††	97.8††	1,500	1973
Showa Y.S.	Yokkaichi	IB#	Shell	40	7,019††	2,131††	30.4††	1,250	1973
Nippon Kokan	Fukuyama	SM**	Nippon Kokan	(253)	4,263††	4,263††	100.0	350	1976

* Operability data are for a continuous 12 months between July 1976 and December 1977.

† Utility boiler.

‡ Coal-fired; other boilers are oil-fired.

§ True operability is 97.0% because boiler stopped for hours due to FGD trouble.

\# Industrial boiler.

** Sintering machine.

†† Modification of FGD system was made. Continuous operation has been achieved for the period July 1977 through May 1978.

†† Due to production control.

Until a few years ago, most FGD plants had start-up problems which took a few months to be solved. Many recent plants have operated smoothly since start-up. For example, the Owase plant, Chubu Electric; the Kashima plant, Sumitomo Metal; the Tamano plant, Naikai Salt; and the Fukuyama plant, Nippon Kokan, have had over 98% operability since start-up (Table 3-12). There is no appreciable difference in the operability between the lime/limestone process, indirect or modified lime/limestone process, and regenerable process, as will be discussed later (see Section 5.1).

3.6.4 Labor Requirements

Most larger plants in Japan are operated by 2-4 persons per shift who also carry out minor maintenance work. For annual maintenance or to solve serious problems of an FGD system, the skilled maintenance staffs that take care of the whole power plant (or steel plant, etc.) look after the FGD system.

Typical labor requirements are shown in Table 3-13. The Fukui plant, Hokuriku Electric, which uses the Chiyoda process, shows the least labor needs, indicating trouble-free operation. On the other hand, the Sakaide plant, Shikoku Electric, shows the largest man-hour requirements, although the operability of the FGD system is relatively high. The extra labor may be required because of the complexity of the FGD process.

3.7 ECONOMIC ASPECTS

3.7.1 Investment Cost

Some FGD plant costs are shown in Table 3-14. The cost of most plants went up from 8,000-15,000 yen/kW before 1973

TABLE 3-13. LABOR REQUIREMENTS OF FGD PLANTS
(Recent One Year)

Plant owner (plant site)	Process (Absorbent)	FGD capacity (MW)	Operation personnel (man-hours/year)				Operability (%)
			Skilled	Unskilled	Maintenance	Total	
Shikoku Electric (Sakaide)	Kureha-Kawasaki (Na_2SO_3-$CaCO_3$)	450	33,000	16,000	19,900	68,900	98.6
Mitsui Aluminum* (Omuta)	Chemico-Mitsui (Carbide lime)	156	8,040	8,040	15,360	31,440	100
Chugoku Electric† (Tamashima)	Babcock-Hitachi ($CaCO_3$)	500	17,520	17,520	not clear		98
Chubu Electric (Nishinagoya)	Wellman-MKK (Na_2SO_3)	220	17,000		14,000	31,000	97.8
Chubu Electric (Owase-Mita)	CaO	375	17,000		14,000	31,000	98.5
Hokuriku Electric (Fukui)	Chiyoda (H_2SO_4-$CaCO_3$)	350	20,800		3,300	24,100	100

* Coal-fired; others are oil-fired.

† Has three scrubbers and a stand-by scrubber; others have no stand-by.

TABLE 3-14. FGD PLANT COSTS IN BATTERY LIMITS

Process	Absorbent	By-product	Capacity (MW)	Plant cost (10^9 yen)	Plant cost ($\frac{10^3 \text{ yen}}{\text{kW}}$)	Year completed
Wellman-MKK	Na_2SO_3	H_2SO_4	70	0.8	11	1971
Sumitomo S.B.*	Carbon	H_2SO_4	55	0.9	15	1971
Chemico-Mitsui	$Ca(OH)_2$	Sludge	128	1.0	8	1972
Hitachi-Tokyo E.P.*	Carbon	Gypsum	150	1.7	11	1972
Wellman-MKK	Na_2SO_3	H_2SO_4	220	1.8	8	1973
Shell*	CuO	SO_2	40	1.0	25	1973
Showa Denko	Na_2SO_3	Gypsum	170	2.0	12	1973
Chubu-MKK	$CaCO_3$	Gypsum	89	0.7	8	1973
Chemico-Mitsui	MgO	SO_2	180	4.3†	24	1974
Mitsui-Chemico	$CaCO_3$	Gypsum	250	4.8	19	1974
Mitsubishi (MHI)	CaO	Gypsum	188	3.5	19	1974
Kureha-Kawasaki	Na_2SO_3	Gypsum	450	9.6	21	1975
Chiyoda	H_2SO_4	Gypsum	350	7.8	22	1975
Babcock-Hitachi	$CaCO_3$	Gypsum	500	10.5	21	1975
Wellman-MKK	Na_2SO_3	H_2SO_4	160	6.0	38	1975
Mitsubishi (MHI)	CaO	Gypsum	375	8.0	21	1976
Mitsubishi (MHI)	$CaCO_3$	Gypsum	250	3.8	15	1976
Dowa	$Al_2(SO_4)_3$	Gypsum	28	0.4	15	1976
Chemico-IHI	$CaCO_3$	Gypsum	265	5.5	21	1977

* Dry processes

† Excluding Claus furnace

to 15,000-24,000 yen/kW in 1974. This increase was affected by the oil crisis. Dry process plants, which are much more costly than wet process plants, have not been constructed since 1974.

Recent costs of lime/limestone gypsum process plants range from 15,000-21,000 yen/kW ($60-80/kW at $ = ¥250). Most indirect lime/limestone gypsum process plants currently cost ¥21,000-23,000/kW. A plant using the Dowa process costs ¥15,000/kW.

A Wellman-MKK process plant was constructed in 1973 at an unusually low cost (¥8,000/kW) but another plant by that process constructed in 1975 cost ¥38,000/kW. One of the reasons for the increase in cost is the recent requirement of an extensive wastewater treatment system.

3.7.2 Costs of Fuels and Desulfurization

Figure 3-13 illustrates the relationship of sulfur content to the cost of fuels. Also included is the additional cost for desulfurization of 3% sulfur oil to various sulfur levels by vacuum gas oil (VGO) hydrodesulfurization, topped crude (TC) hydrodesulfurization, FGD, and gasification. The desulfurization cost is based on 7,000 hours annual operation with 7 years depreciation. The current price difference between 3% and 0.2% sulfur oils is nearly $1.0/million Btu. The cost of reducing sulfur in heavy oil from 3 to 0.2% by supertopped crude hydrodesulfurization is also about $1.0/million Btu while the equivalent cost for FGD is a little lower. The recent oversupply of FGD by-products, however, has adversely affected FGD economics. Although elemental sulfur is still a desirable by-product which can be exported, sulfur by-production from FGD systems so far developed seems more costly than sulfur by-production from hydrodesulfurization. Oil refineries which have

a Claus furnace to which the recovered SO_2 can be charged for sulfur production are an exception.

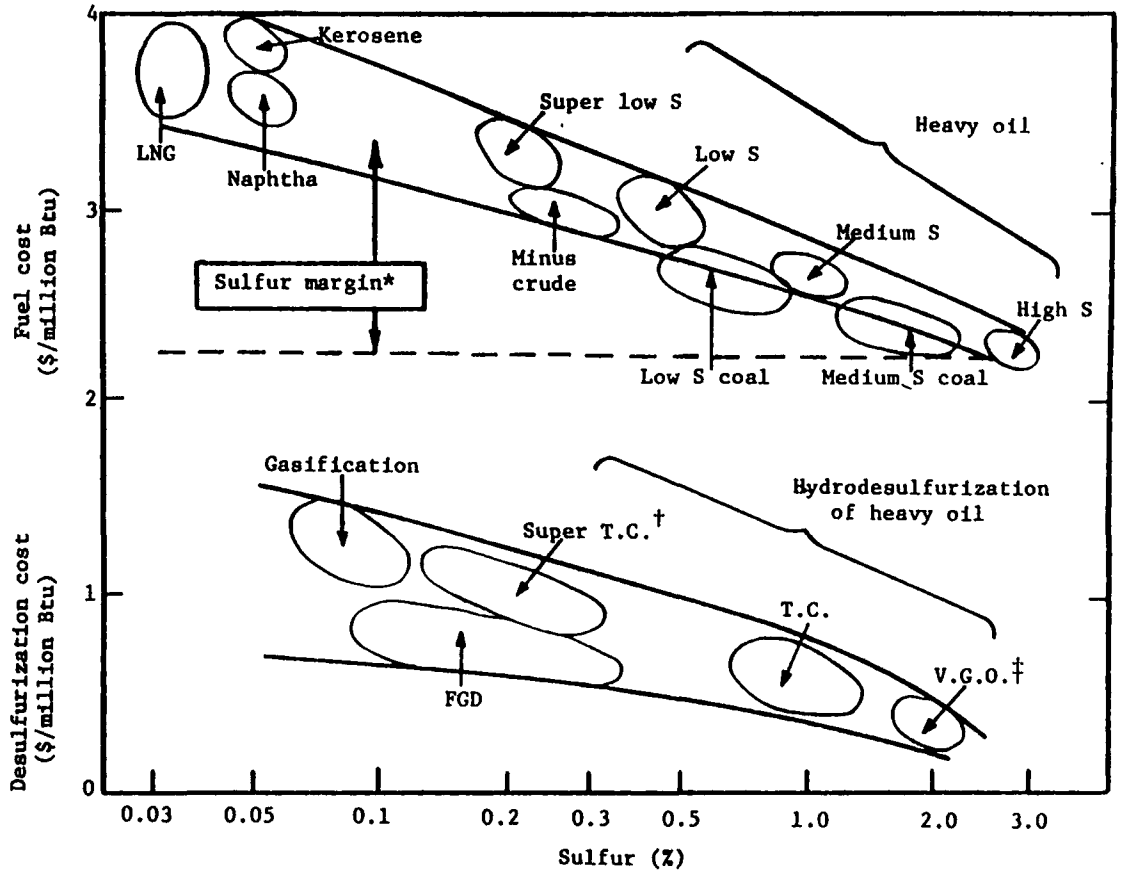

* Price difference between low S fuels and high S heavy oil
† T.C. = Topped Crude Hydrodesulfurization
‡ V.G.O.= Vacuum Gas Oil Hydrodesulfurization

Figure 3-13. Costs of fuels and desulfurization (with 3% S Oil) ($1=¥250, Aug., 1977).

SECTION 4

WET LIME/LIMESTONE PROCESSES

4.1 GENERAL DESCRIPTION

4.1.1 Outline

Wet lime/limestone process plants with a capacity larger than 60,000 Nm^3/hr (20 MW) are listed in Tables 4-1 - 4-3. The first commercial plant using a wet lime-gypsum process was constructed in 1964 by Mitsubishi Heavy Industries (MHI) and licensed by Japan Engineering Consulting Co. It was built to treat 62,500 Nm^3/hr of a sulfuric acid plant tail gas containing 2,200 ppm SO_2. The FGD plant, which used a spray scrubber, encountered several problems, including plugging, scaling and corrosion, at the beginning of operation. The problems were gradually solved, and many FGD plants using wet lime/limestone processes have since been constructed by MHI and other companies.

The MHI (or Mitsubishi-JECCO) process has been used most widely for oil-fired boilers, iron-ore sintering plants, etc. The Chemico-Mitsui, Mitsui-Chemico, Chemico-IHI and Babcock-Hitachi processes have been applied to coal-fired boilers because they use a venturi which is suitable for dust removal and they use scrubbers which have been developed for coal-fired boilers in the U.S. Six other processes have also been used mainly for flue gas from oil-fired boilers, while three others have been used for sintering plants.

TABLE 4-1. WET LIME/LIMESTONE PROCESS PLANTS BY MHI PROCESS (LARGER THAN 60,000 Nm^3/hr)

User	Plant Site	Capacity ($1,000\ Nm^3/hr$)*	Source of Gas	SO_2 (ppm) Inlet	SO_2 (ppm) Outlet	Absorbent	Year of Completion
Nippon Kokan	Koyasu	62.5	H_2SO_4 plant	2,200	200	$Ca(OH)_2$	1964
Kansai Electric	Amagasaki	100	Utility boiler†	700	70		1972
Onahama Refining	Onahama	92	Copper smelter	20,000	100	"	1972
Kawasaki Steel	Chiba	120	Sintering plant	600	60		1973
Kansai Electric	Kainan	400	Utility boiler	550	60		1974
Tokyo Electric	Yokosuka	400	"	250	40	$CaCO_3$	1974
Tohoku Electric	Hachinohe	380	"	850	85	$Ca(OH)_2$	1974
Kyushu Electric	Karita	550	"	800	75		1974
Kawasaki Steel	Mizushima	750	Sintering plant	830	40		1974
Kansai Electric	Amagasaki	375	Utility boiler	500	50		1975
Niigata Power	Niigata	530	"	700	70	$CaCO_3$	
Kawasaki Steel	Mizushima	900	Sintering plant	500	40	$Ca(OH)_2$	
Kawasaki Steel	Chiba	320		800	60	"	
Teijin	Ehime	270	Industrial boiler†	1,700	60	"	
Mizushima Power	Mizushima	611	Utility boiler	1,050	40		"
Tohoku Electric	Niigata	420	"	550	55	$CaCO_3$	1976
Chubu Electric	Owase	1,200		1,500	35	$Ca(OH)_2$	
Chubu Electric	Owase	1,200		1,500	35		
Kawasaki Steel	Mizushima	750	Sintering plant	550	40		"
Toyobo	Iwakuni	200	Industrial boiler	1,400	50		
Kashima Power	Kashima	431	Utility boiler	1,000	100	$CaCO_3$	
Kyushu Electric	Karatsu	730	"	550	70	"	"
Kyushu Electric	Karatsu	570		550	70	"	
Kyushu Electric	Ainoura	730	"	880	110		"
Kyushu Electric	Ainoura	730		880	110	"	
Sakata Power	Sakata	1,100	"	950	50		
Sakata Power	Sakata	1,100	"	950	50		
Kansai Electric	Amagasaki	475				$Ca(OH)_2$	
Niigata Power	Niigata	530				$CaCO_3$	
Chugoku Electric	Shimonoseki	1,200		1,600	50	"	1977
Fukui Power	Mikuni	750	"				1978

* 1,000 Nm^3/hr = 590 scfm = 320 kW

† All boilers are oil-fired.

TABLE 4-2. WET LIME/LIMESTONE PROCESS PLANTS USING SCRUBBERS DEVELOPED IN U.S. (LARGER THAN 60,000 Nm^3/hr)

User	Plant Site	Capacity (1,000 Nm^3/hr)*	Source of Gas	SO_2 (ppm) Inlet	SO_2 (ppm) Outlet	Absorbent	Year of Completion
Babcock-Hitachi process							
Chugoku Electric	Mizushima	310	Utility boiler			$CaCO_3$	1974
Asahi Chemical	Mizushima	481	Industrial boiler			"	1975
Kansai Electric	Osaka	500	Utility boiler				
Chugoku Electric	Tamashima	1,460	"	1,500	60	"	"
Kansai Electric	Osaka	500				"	"
Chugoku Electric	Tamashima	1,000	"				1976
Showa Power	Ichihara	249					
Showa Power	Ichihara	480				"	"
Maruzumi Paper	Kawanoe	342	Industrial boiler			"	"
Electric Power Dev.	Takehara	852	Utility boiler†				1977
Ishikawajima Harima (IHI) - TCA process							
Chichibu Cement	Kumagaya	104	Diesel engine	700	50	CaO	1972
Onahama Smeltery	Onahama	120	Converter			"	"
Furukawa Mining	Ashio	60	H_2SO_4 plant			"	"
Chichibu Cement	Kumagaya	106	Diesel engine			"	1973
Hibi Smeltery	Hibi	300	Smelter			"	1974
Tokuyama Soda	Tokuyama	500 x 2	Industrial boiler				1975
Sumitomo Power	Niihama	450	Utility boiler			$CaCO_3$	"
Mitsui Alumina	Wakamatsu	300	Boiler, Kiln				
Chemico - Mitsui and Mitsui - Chemico processes							
Mitsui Aluminum	Omuta	512	Industrial boiler†	2,000	200	$Ca(OH)_2$ §	1972
Mitsui Aluminum	Omuta	552		1,500	150	$CaCO_3$	1975
Electric Power Dev.	Takasago	840	Utility boiler†	1,500	150		"
Electric Power Dev.	Takasago	849	"	1,500	150	"	1976
Ishikawajima Harima (IHI) - Chemico process							
Electric Power Dev.	Isogo	900 x 2	Utility boiler†	500	70	$CaCO_3$	1976

* 1,000 Nm^3/hr = 590 scfm = 320 kW

† Coal-fired boilers. Other boilers are oil-fired.

§ Carbide sludge to by-produce throwaway calcium sulfite. Other plants by-produce gypsum.

TABLE 4-3. WET LIME/LIMESTONE PROCESS PLANTS BY OTHER PROCESSES (LARGER THAN 60,000 Nm^3/hr)

User	Plant Site	Capacity (1,000 Nm^3/hr)*	Source of Gas	SO_2 (ppm) Inlet	SO_2 (ppm) Outlet	Absorbent	Year of Completion
Fujikasui-Sumitomo process (Moretana scrubber)							
Ide Paper	Fuji	60	Industrial boiler	1,340	20	$CaCO_3$	1974
Sanyo Kokusaku Pulp	Onomichi	140	Recovery boiler	4,000	40	"	1975
Sumitomo Metal	Wakayama	370	Sintering machine	650	20	'	
Sumitomo Metal	Kokura	92	Heating furnace	820	40	'	
Sumitomo Metal	Kashima	880	Sintering machine	650	30	'	
Sumitomo Kainan Kokan	Wakayama	182	Heating furnace	680	35	'	'
Sumitomo Metal	Kashima	1,000 x 2	Sintering furnace	650	30		1976
Sumitomo Metal	Kokura	750	'	650	20		'
Takaoka Power	Takaoka	350	Utility boiler	1,220	50	'	1977
Nippon Kokan process (spray tower absorber)							
Nippon Sheet Glass	Yokkaichi	120	Glass furnace	1,000	100	$Ca(OH)_2$	1974
Nippon Sheet Glass	Maizuru	107		1,550	200	$CaCO_3$	1976
Nippon Kokan	Fukuyama		Incinerator	28,000	200	CaO	'
Chubu - MKK process (CM process)							
Ishihara Chemical	Yokkaichi	250	Industrial boiler	1,600	150	$CaCO_3$	1974
Mitsubishi Gas Chem.	Yokkaichi	60	'	1,300	100	$Ca(OH)_2$	
Kawasaki Heavy Industry process							
Jujo Paper	Akita	84	Recovery boiler			$CaCO_3$	1973
Jujo Paper	Akita	90	'				1975
Nippon Steel process (SSD process)							
Nippon Steel	Tobata	200	Sintering machine			Slag	1974
Nippon Steel	Wakamatsu	1,000				'	1976

* 1,000 Nm^3/hr = 590 scfm = 320 kW

Many of the plants constructed before 1974 use lime at a stoichiometry of 0.95 - 1.0 to remove 93 - 98% of SO_2. Most of the plants constructed later use limestone (ground so that 95% of it passes a 325 mesh screen) at a stoichiometry of 1.0 - 1.05 to remove 90 - 98% of SO_2. Virtually all of the plants by-produce salable gypsum.

A schematic flowsheet common to most processes, except those with the Chemico scrubber, is shown in Figure 4-1. Flue gas from an electrostatic precipitator is passed through a cooler or prescrubber, a scrubber, a mist eliminator, a reheater and then a stack.

The cooler has the following three functions:

1) It removes particulates and improves the purity of the by-product.

2) It cools the gas to protect the plastic coatings and packings in the scrubber.

3) It prevents partial dry-up in the scrubber to help prevent scaling.

The Chemico-Mitsui, Mitsui-Chemico and Chemico-IHI processes do not use a cooler. In these processes, which use two scrubbers, a large L/G ratio is used in the first scrubber.

Types of scrubbers and examples of operation parameters are listed in Table 4-4. In most plants, calcium sulfite formed by the reaction of SO_2 with lime or limestone slurry is oxidized to gypsum by air bubbling. Various types of bubbling systems, either under pressure or at atmospheric pressure, have been used.

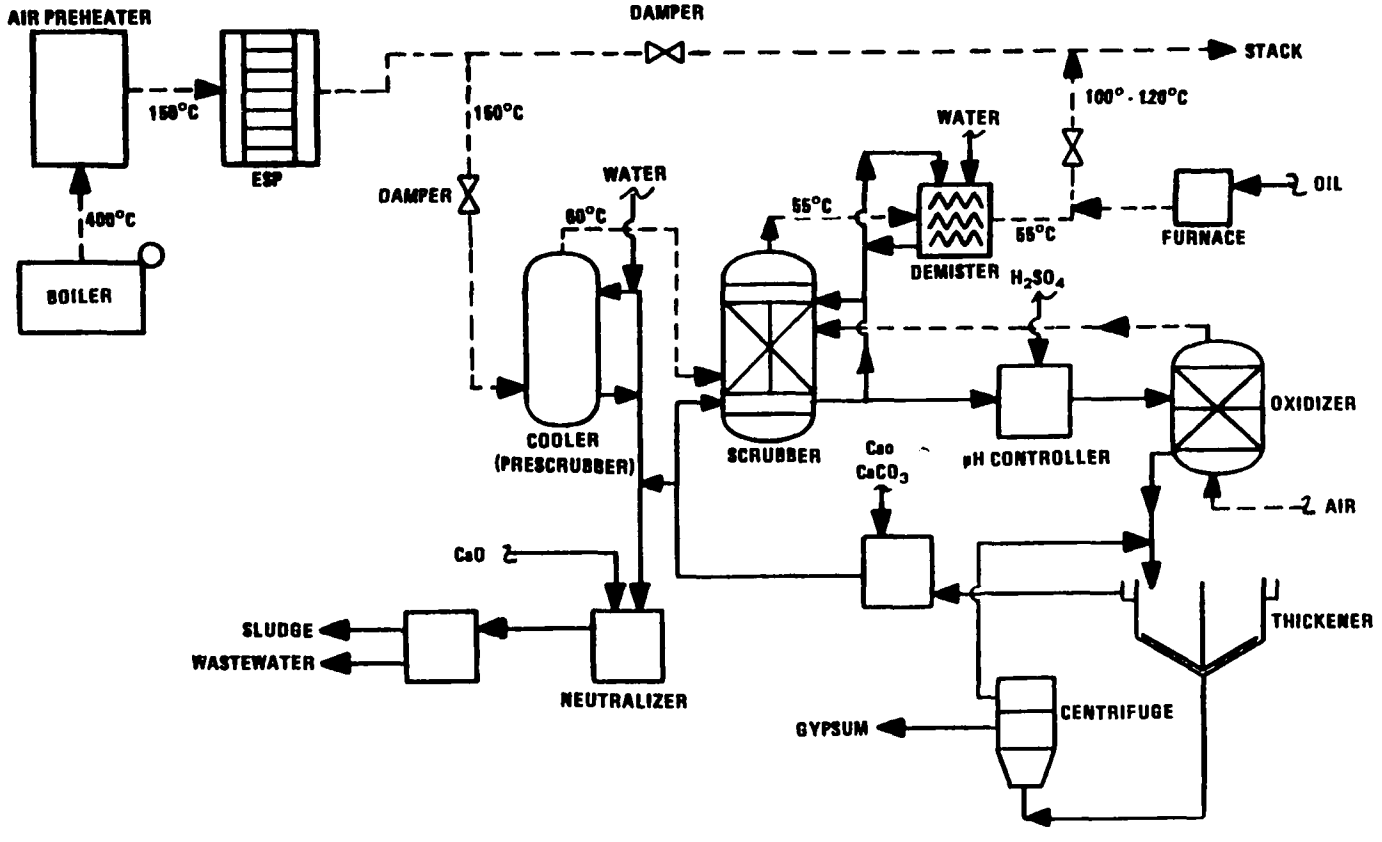

Figure 4-1. Typical flow sheet of wet lime/limestone gypsum process.

TABLE 4-4. OPERATION DATA OF MAJOR LIME/LIMESTONE PROCESS PLANTS

Process	Lime scrubbing		Limestone scrubbing					
Process developer	Mitsubishi H.I.	Chemico-Mitsui	Mitsubishi H.I.	Babcock-Hitachi*	Babcock-Hitachi	Mitsui-Chemico*	IHI-Chemico*	Sumitomo-Fujikasui
Plant owner	Chubu Electric	Mitsui Aluminum	Kyushu Electric	Chugoku Electric	Electric Power D.C.	Power D.C.	Electric Power D.C.	Sumitomo Metal
Plant site	Owase	Omuta†	Karatsu	Tamashima	Takehara	Takasago	Isogo	Kashima
Fuel	Oil	Coal	Oil	Oil	Coal	Coal	Coal	Coke
FGD capacity (MW)	375	156	250	500	250	250‡	265‡	(630)§
FGD capacity (1,000 Nm^3/hr)	1,200	510	730	1,480	850	850	900	2,000
Inlet SO_2 (ppm)	1,600	2,300	530	1,460	1,550	1,500	450	400-600
Inlet dust (mg/Nm^3)	15	630	25	40	600	100	1,500	100-200
Inlet gas temperature (°C)	150	135	150	140	150	140	170	150
CaO/SO_2 stoichiometry	1.0	1.05			1.05	1.0	1.0-1.05	1.05
Number of scrubbers in parallel	2	2	1	3+1#	1	1	1	2
Prescrubber (first scrubber)								
Type	Spray	Venturi	Spray	Venturi	Venturi	Venturi	Venturi	PP**
L/G (liters/Nm^3)	2	5-8	2	10	2.4	6	7	7
Scrubber (second scrubber)								
Type	Packed	Venturi	Packed	PP**	PP**	Venturi	Venturi	PP**
Slurry pH	6.5-7	7.5	6.2	6.6	6-6.5	6.2	5-6	6.7
Slurry concentration (%)	10	5		12.5	9	5-6	7	7-8
L/G (liters/Nm^3)	7	5-8	12	10	7	6	7	8
Gas velocity (m/sec)	3.4		3.0				3.0	4.4
Outlet SO_2 (ppm)	120	220	50	60	100	100	40	30
Outlet dust (mg/Nm^3)	8	40	6		30	50	50	20
SO_2 removal efficiency (%)	93	90	90	96	98	93	93	93-95
Mist eliminator type	CE††	Chevron	Chevron	Pwf‡‡	Pwf‡‡	Chevron	Chevron	Impinger
Pressure drop (mmH_2O) Prescrubber	30	} 200	60	225	230	150	150	180
Pressure drop (mmH_2O) Scrubber	150		35	505	375	150	150	130
Pressure drop (mmH_2O) Mist eliminator	25	30	65	25	10	25	50	30
Pressure drop (mmH_2O) Total system	375		185	1,080	950	525	600	530
Wastewater purged (t/hr)	3			4	12	7.5	10	60
Energy requirement (design)								
Pump (kW)		1,320		4,100	1,400	2,800	2,000	4,400
Fan (kW)		2,000		11,500	5,500	4,200	4,800	8,170
Total FGD system (kW)	7,500	3,867	5,070	17,600	8,200	8,000	7,800	13,230
Percent of power generated	2.0	2.5	2.0	3.5	3.3	3.2	2.9	2.1
Operability (%)	98, 99	100	99.7	97.4	97.4	97, 98	100	100

* Coal-fired systems

† Throw-away process. Others by-produce gypsum.

‡ Capacity of each of two units.

§ Iron-ore sintering plant. Others are utility boilers.

\# Stand-by

** Perforated plate.

†† Chevron and Euroform

‡‡ Pipe with fin.

For perfect oxidation to obtain good-quality gypsum, the pH of the sulfite slurry should be maintained below 4.5. Since the pH of the slurry discharged from the scrubber is 5.5 - 6.5 in most plants, sulfuric acid is added to lower the pH. In two plants, however, perfect oxidation has been attained without using sulfuric acid. One of these is the Owase-Mita plant, Chubu Electric, using the MHI two-tower system with lime (see Section 4.2) and the other is the Takasago plant, EPDC, using the Mitsui-Chemico limestone scrubbing process with reactors. Both plants lower the pH using SO_2 in flue gas; a high SO_2 concentration is favorable to lowering the pH.

The only plant in Japan using the calcium sulfite sludge ponding system is the Omuta plant, Mitsui Aluminum. The plant uses a two-stage Chemico venturi scrubber and a carbide sludge absorbent. The plant has been operated in an unsaturated mode. Gypsum is not formed, although about 10% oxidation of calcium sulfite occurs in the scrubber. For more recently constructed FGD installations, Mitsui Aluminum has selected a modified process, the Mitsui-Chemico process, to by-produce gypsum using limestone. The modified process was selected because of a shortage in the supply of carbide sludge and because of limited capacity in the calcium sulfite sludge pond.

4.1.2 Scale Prevention

In most plants by-producing gypsum, more than 20% oxidation of calcium sulfite occurs, resulting in the formation of gypsum in the scrubber. Gypsum crystals are usually recycled to the scrubber as seed crystals to eliminate the formation of gypsum on the surface of structural materials which tends to cause scaling (Figure 4-2). Smooth structural material surfaces and continuous flow of slurry in all parts of the scrubbers and piping are also keys to scale prevention.

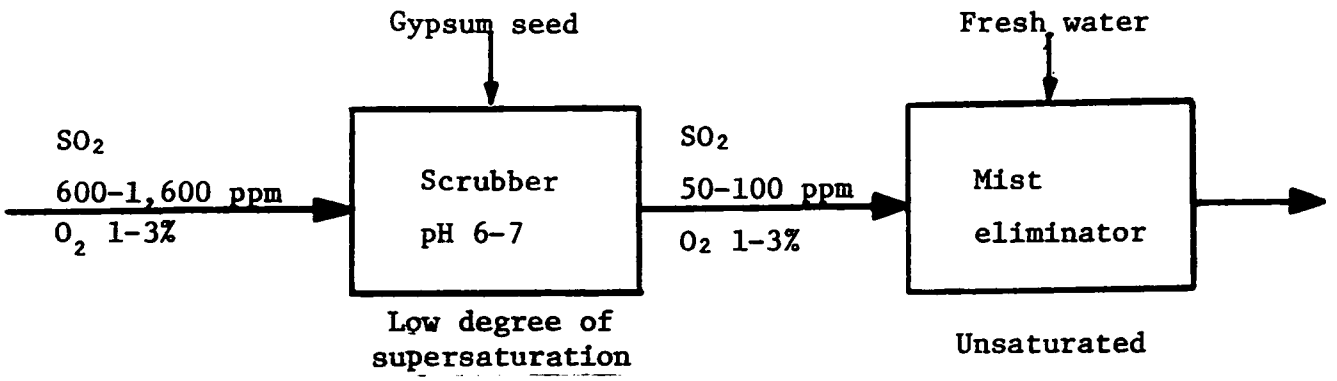

Typical Japanese system (Forced oxidation, CaO/SO_2 = 1.0-1.1)

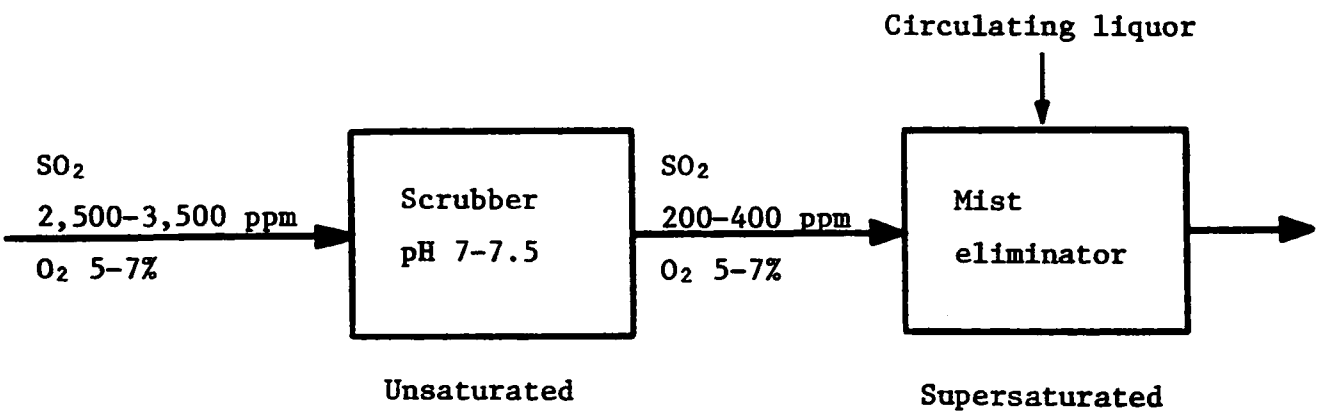

U.S. unsaturated lime system (Throw-away sludge, CaO/SO_2 = 1.1-1.2)

Figure 4-2. Comparison of gypsum circulation system (Japan) and unsaturated mode lime system (U.S.).

Some of the U.S. plants such as Paddy's Run and Cane Run, Louisville Gas and Electric, and a Japanese plant of Mitsui Aluminum in Omuta have been operated in the unsaturated mode by keeping the oxidation of calcium sulfite below 10%. Below this level of oxidation, gypsum is not formed in the slurry, and, therefore, scale formation is prevented. Most of the plants have been operated successfully using a high slurry pH of about 7 with a high concentration of SO_2. Both factors lower the oxidation ratio (see Figure 4-2).

The unsaturated mode, however, is not applicable to flue gas from a low-sulfur fuel because of a high O_2/SO_2 ratio which results in over 20% oxdiation. At this oxidation level gypsum is formed, and tends to cause scaling. Even with a high-sulfur fuel, gypsum may form at a mist eliminator by the reaction of lime or limestone in the mist with SO_2 and O_2 at a high O_2/SO_2 ratio (see Figure 4-2).

As is generally experienced, mist eliminators are most susceptible to scaling. It seems that the scaling problem is less serious in Japan than in the U.S. This may be attributable to the following reasons:

1) A low concentration of lime or limestone is in the mist due to high utilization (over 90%) of lime or limestone. A CaO/SO_2 mole ratio of 1.0 - 1.05 is used to remove 90 - 98% of SO_2. The high utilization and removal efficiency is attained by finely grinding the lime or limestone and by having good gas-liquid contact in the scrubber. Usually limestone is ground so that over 95% passes 325 mesh screen.

2) A low concentration of SO_2 is in the gas passing through the eliminator. This is due mainly to the high SO_2 removal ratio.

3) Mist and wash liquor contain a considerable amount of gypsum which works as crystal seed to prevent scaling.

4) When an appreciable amount of scale is formed, it is washed with fresh water to dissolve the scale. In some of the plants, the eliminator is washed with fresh water only, although this tends to increase the amount of wastewater.

4.1.3 Wastewater, Power Consumption and Operability

At the plants listed in Table 4-4 (and Table 3-8), wastewater is purged at the rate of 3 - 60 tons/hr or 7 - 87 kg/MWh. The wastewater is purged to prevent the accumulation of chlorine in the scrubber liquor because chlorine increases corrosion. The plants of Electric Power Development Co. produce high levels of wastewater (48 kg/MWh) because they use coal which contains a considerable amount of chlorine. As may be seen in Table 3-8, two oil-fired plants purge only 8 kg/MWh. The ratio of wastewater to by-product gypsum for these plants is about 0.2. The ratios for three typical coal-fired plants are 0.8 to 2.0. Since by-product gypsum contains about 10% moisture, the total amount of water removed from a system with a wastewater to by-product ratio of 1.0 is almost equal to the total amount of water removed from a throw-away process with a 40% solid sludge and no wastewater purge. This means that in total the gypsum by-production processes for oil-fired flue gas purge much less water and those for coal-fired flue gas purge a little more water than do throw-away processes.

SO_2 removal efficiencies of the plants shown in Table 4-4 range from 90 - 98%. Power required for a total FGD system ranges from 2.0 - 3.5% of the power generated. The power consumption is larger with the Chemico and Babcock processes, which use a venturi, than with the MHI and Fujikasui-Sumitomo processes because of the larger pressure drop required in order to provide an adequate dust removal efficiency.

Table 4-4 shows that the operability of the plants are over 97%. Operability is the percent of desired operating hours in which an FGD plant is actually operating. Utility and industrial boilers are normally operated for 11 months almost continuously and shutdown for about a month for maintenance while iron-ore sintering machines are operated continuously for a month or two and shutdown for several days for maintenance. FGD operation is desired for all of the operation hours of the gas sources.

Some FGD plants encountered start-up problems, but these were solved in a few months. A few plants have an operability of 100%, but this does not mean that they have no problem. Rather, it means that problems such as plugging, scaling, corrosion, erosion, etc. can be controlled to a minor degree so that they do not hinder operation and can be taken care of during shutdown of the gas source.

The FGD plants have spare pumps and centrifuges. None currently have a standby scrubber, however, except for the Tamashima plant, Chugoku Electric, which has four scrubbers including a standby unit. In 1972, Mitsui Aluminum installed two scrubbers at Omuta; one was to treat 70% of the flue gas, while the other was for standby. The operability had been 100% with the one scrubber, and the standby scrubber was not used. Since

a few years ago, however, 100% of the flue gas has been treated by using the two scrubbers in parallel.

Figure 4-3 illustrates the relationship of inlet SO_2 concentration to operability of the major lime/limestone process plants shown in Tables 3-12 and 4-4. The operability of all plants is higher than 97%. In general, the operability is lower with a higher SO_2 concentration, which imposes a larger load on the scrubber and mist eliminators. Operability is also lower with utility boilers which are subject to a frequent load fluctuation than with industrial boilers with a constant load.

For utility boilers, the operability with coal tends to be a little lower than with oil, but the difference is smaller than 1% and may not be significant. Major differences between coal and oil are in the content of fly ash, which increases erosion, and the content of chlorine, which tends to promote corrosion. As long as these are maintained under a certain level by using an electrostatic precipitator and by purging some wastewater, as is done in all of the plants for utility boilers, the difference between coal and oil may not be significant.

Two plants treating flue gas from coal-fired industrial boilers containing 2,300 ppm SO_2 have virtually 100% operability. These plants are at Omuta, Mitsui Aluminum. The first plant is operated in the unsaturated mode using carbide lime as the absorbent. X-ray tests have shown that gypsum is absent in the scrubber slurry.[10] A recent study has shown that carbide lime contains an ingredient which may depress oxidation and promote unsaturated mode operation.[11] It may be possible to use usual lime and operate a plant successfully in the unsaturated mode. However, the attainment of high operability may not be as easy as with carbide lime. Therefore, saturated mode

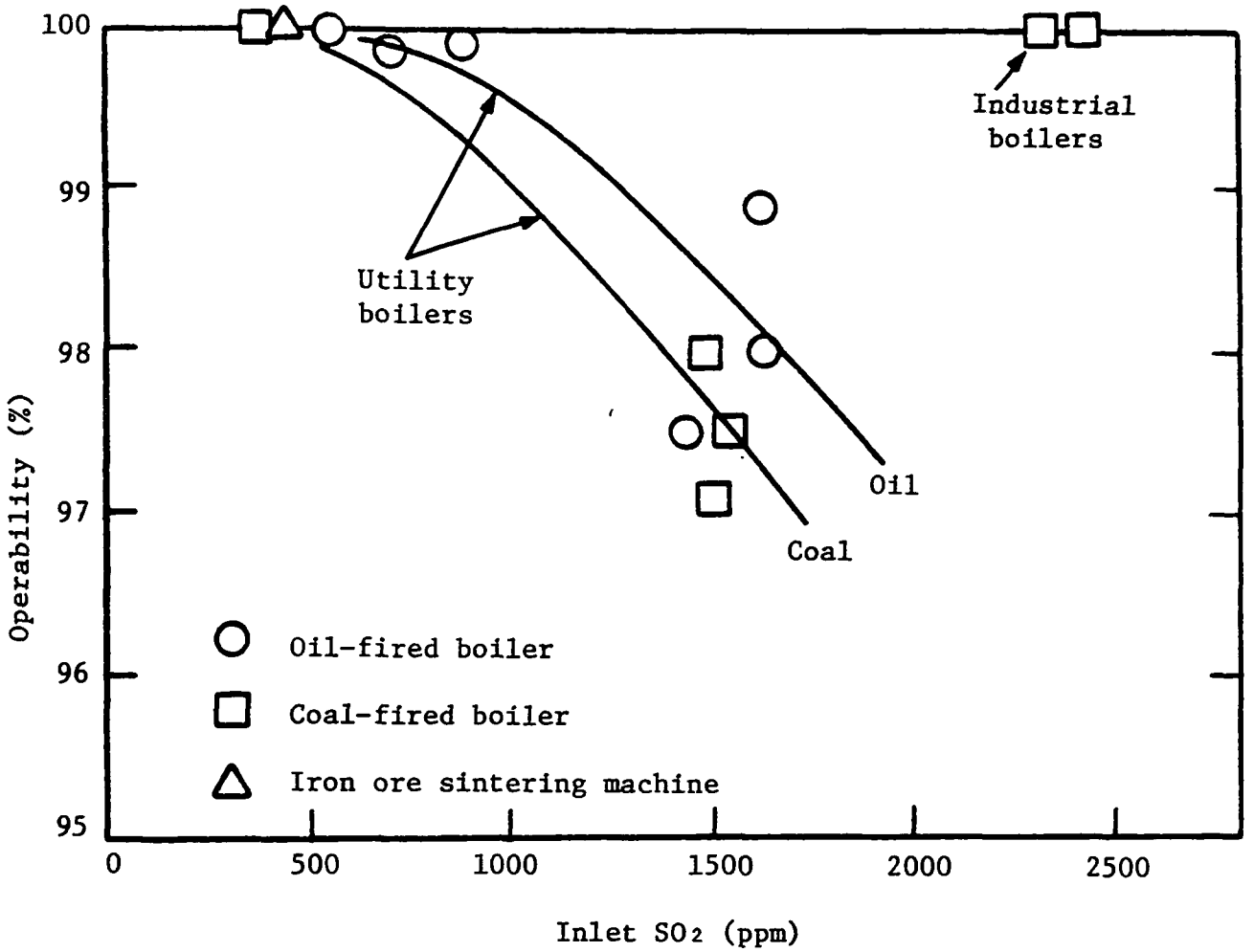

Figure 4-3. Relationship of inlet SO_2 concentration and operability of FGD (lime/limestone process).

operation with forced oxidation and gypsum circulation may be safer and more widely applicable as long as usual lime or limestone is used.

The second plant of Mitsui Aluminum at Omuta, which has 100% operability, uses a limestone-gypsum process. FGD for utility boilers is not as easy as FGD for industrial boilers, such as at Mitsui Aluminum. By improving operation control, however, the operability of FGD plants for utility boilers may be further increased to approach that for industrial boilers.

4.2 OPERATION OF FGD PLANTS FOR COAL-FIRED BOILERS

4.2.1 General Description

FGD plants for coal-fired boilers are listed in Table 4-5. Seven plants are in operation and three are to be completed by 1981. All of them use a wet lime/limestone process. Five more coal-fired boilers (total 390 MW) are planned for completion in 1982 and 1983.

The first FGD plant, the Omuta plant of Mitsui Aluminum, has been operated quite well since 1972, by-producing a sulfite sludge using carbide lime. Since land space for sludge disposal and supply of carbide lime are limited, Mitsui Aluminum's second plant at Omuta uses a limestone-gypsum process. All FGD plants constructed later for coal-fired boilers use a limestone gypsum process. The by-product gypsum contains 2 - 5% fly ash and 10 - 12% moisture except for the gypsum at the Isogo plant, which contains 15 - 20% fly ash and 15% moisture. All of the gypsum has been sold for cement, wallboard, and other construction material.

TABLE 4-5. FGD PLANTS FOR COAL-FIRED BOILERS

Plant Owner	Plant Site	Capacity (MW)	Process	SO_2 (ppm) Inlet	SO_2 (ppm) Outlet	Absorbent	Year of Completion
Mitsui Aluminum	Omuta	156*	Chemico-Mitsui	2,000	200	$Ca(OH)_2$†	1972
		156*	Mitsui-Chemico	1,500	150	$CaCO_3$	1975
EPDC	Takasago	250	Mitsui-Chemico	1,500	150		1975
"	"	250	Mitsui-Chemico	1,500	150	"	1976
"	Isogo	265	IHI-Chemico	500	50		1976
"	"	265	IHI-Chemico	500	50	"	1976
	Takehara	250	Babcock-Hitachi	1,700	100	"	1977
"	Matsushima	500	--	800	--	"	1981
Chugoku Electric	Shimonoseki	175	Mitsubishi H.I.	1,200	50	"	1979
Hokkaido Electric	Tomakomai	250	--	--	--		1981

* Industrial boiler; others are utility boilers.

† Carbide lime to by-produce calcium sulfite sludge; others by-produce gypsum.

The seven plants in operation use U.S. scrubbers--Chemico and Babcock with a venturi efficient for particulate removal. (The plants also have electrostatic precipitators for particulate removal.) The scrubbers, with a venturi, give a large pressure drop and the FGD systems consume over 2.5% of the power generated. New plants to be constructed may use a low pressure drop scrubber with a highly efficient electrostatic precipitator. Gas-gas heat exchangers of the Ljungstrom type will be used for the gas reheating as stated in Section 3.5.5.

The power cost using coal of 10,000 yen/ton (6,200 kcal/kg) and FGD is estimated at 8.6 - 8.9 yen/kWh. Of this total, FGD cost accounts for 1.2 - 1.5 yen/kWh including 7 years depreciation and reheating to 90 - 120°C.

Generally speaking, FGD plants for coal-fired boilers are not appreciably different in performance from FGD plants for oil-fired boilers except for the following factors.

1) When the electrostatic precipitator is not highly efficient, fly ash from coal increases erosion of the construction materials and also lowers the filterability of gypsum.

2) Usually a larger amount of chlorine tends to accumulate in the scrubber liquor of FGD plants for coal-fired boilers.

4.2.2 Takasago Plant, EPDC (Mitsui-Chemico Limestone-Gypsum Process)

Process Description--

Takasago Power Station, EPDC, is located in a relatively small industrial region facing the Seto Inland Sea. It has two 250 MW coal-fired boilers, each with an FGD unit using the Mitsui-Chemico limestone-gypsum process. A flowsheet of the No. 2 unit is shown in Figure 4-4. The process is characterized by the use of a pH controlling tower and a reactor to lower the pH of the calcium sulfite slurry to about 4.0. At this low pH, SO_2 in flue gas can be oxidized without using sulfuric acid.

About 70% of the flue gas, which contains 1,400 - 1,600 ppm SO_2 is fed to the 1st scrubber and then to the 2nd scrubber. Both scrubbers are of the Chemico venturi type. The rest of the gas is fed through the pH controller and the reactor to the 2nd scrubber. A limestone slurry is also fed to the 2nd scrubber. The reacted slurry flows through the 1st scrubber and the pH controller to the reactor, where air bubbles are introduced for the oxidation of calcium sulfite to gypsum. The gypsum slurry is centrifuged to by-product gypsum containing about 10% moisture and is sold for cement and wallboard. The filtrate discharged from the centrifuge is used to prepare the limestone slurry. A limestone powder, 95% under 325 mesh, is purchased as the absorbent. Details of the process are available in published literature.[16])

The No. 1 unit is similar to the No. 2 unit except that it has two reactors. The operation parameters are shown in Tables 4-4 and 4-6. The boilers burn a blend of domestic coals with an average sulfur content of 2.0%. Over 90% SO_2

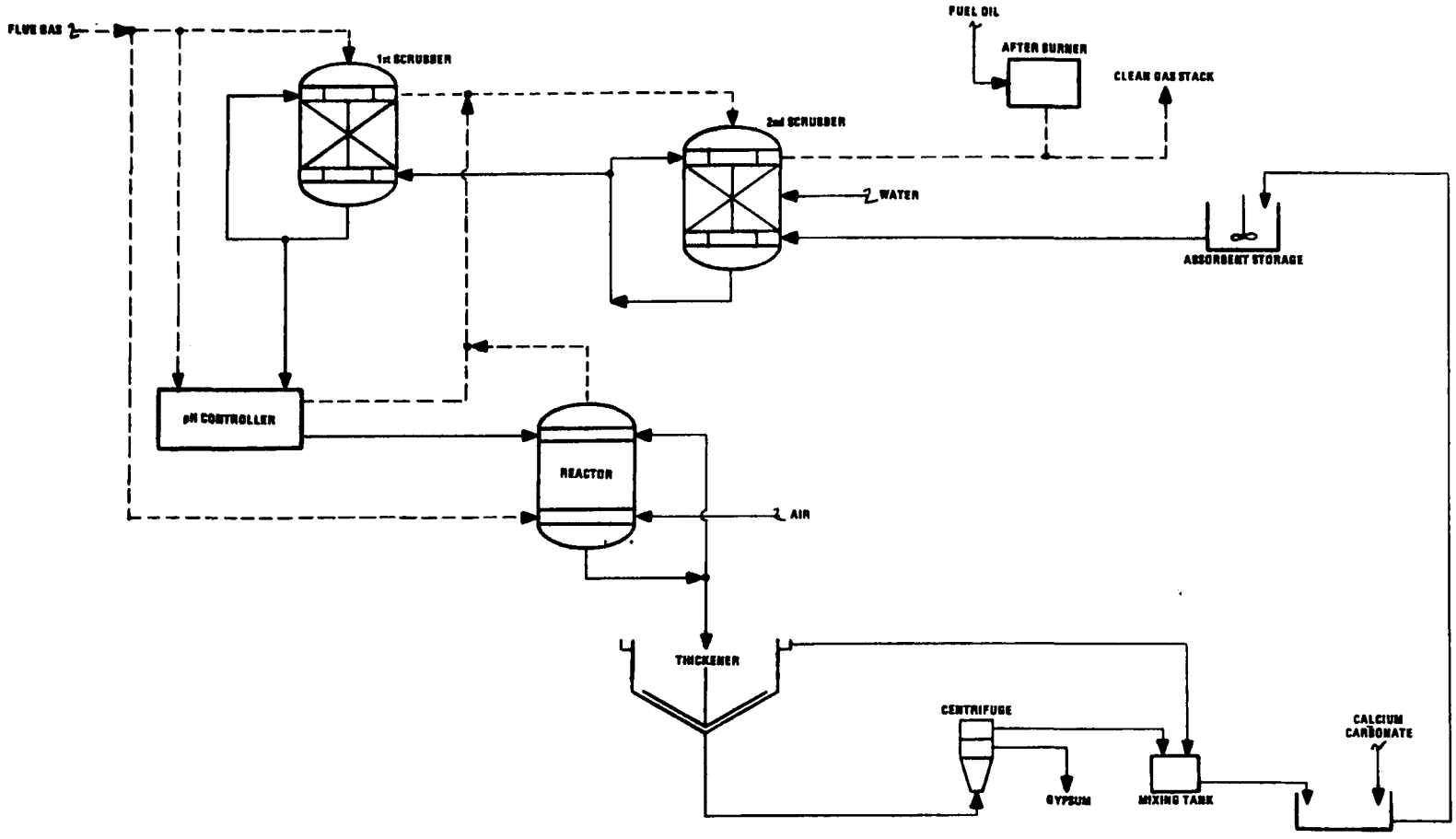

Figure 4-4. Flow sheet of Takasago plant, EPDC (No. 2 unit).

removal efficiency has been attained at a total pressure drop of 525 mmH_2O. The actual power consumption of the FGD unit is 6,500 kW, which is equivalent to 2.6% of the power generated by the boiler. Initially, a catalyst was added to the scrubber slurry to increase the SO_2 removal efficiency and to promote the oxidation, but the catalyst is no longer used.

TABLE 4-6. SPECIFICATIONS OF FGD UNITS

	Designed	Actual
Power generating capacity (MW)	250	
Fuel consumption (tons/hr)	89.4	
Inlet gas volume (dry)		
(10^3 Nm^3/hr)	743	799
O_2 in gas (%)	4.7	5.5 - 6.0
Gas temperature (°C)	140	150 - 160
SO_2 inlet concentration (ppm)	1,500	1,400 - 1,600
SO_2 (scrubber outlet) (ppm)	below 100*	70 - 80
SO_2 removal efficiency (%)	93.3	95
Inlet dust (mg/Nm^3)	100	80
Outlet dust (mg/Nm^3)	below 50*	20
Requirements		
Water (ton/hr)	46	52
Limestone (ton/hr)	5.1	
Power (kW)	8,000	6,500

*Guaranteed by Mitsui Miike

The plant has a wastewater treatment system similar to that in Isogo (see Section 4.3) to remove dithionate to reduce COD.

Performance--

The No. 1 and No. 2 FGD units went into operation in February 1975 and in March 1976, respectively. The boiler load varies within a day as shown in Figure 4-5.

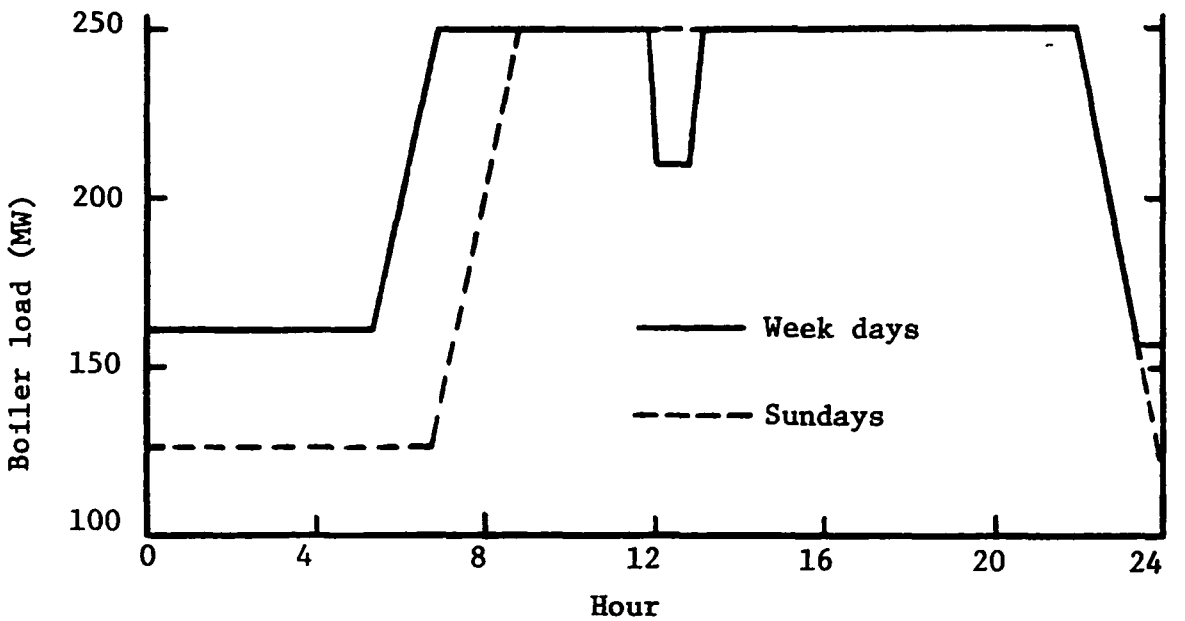

Figure 4-5. Hourly change of operation load (Takasago plant, EPDC).

The operation hours of the boilers and the FGD units and remedies for troubles encountered by the units since start-up are shown in Tables 4-7 and 4-8. The major problem with the No. 1 unit has been the scaling of mist eliminators which have been washed with the circulating liquor. The mist eliminator of the No. 1 scrubber was removed after about one year's operation because it had been most troublesome. The mist eliminator of the No. 2 unit was washed alternately with fresh water and circulating liquor to reduce the scaling problem. After removal of the mist eliminator for the No. 1 scrubber, however, scale

TABLE 4-7. PERFORMANCE OF THE NO. 1 UNIT, TAKASAGO PLANT

Month	Hours: Total (A)	Hours: Boiler operation (B)	Hours: FGD stop (C)*	Boiler availability (%)†	FGD operability (%)§	Remarks
Feb. 1975	672	616	19	91.7	97.0	Piping flange leak
Mar.	744	360	0	48.4	100	
Apr.	720	318	0	44.1	100	Annual shutdown of boiler
May	744	717	0	96.4	100	
June	720	720	15	100	97.9	Mist eliminator wash
July	744	743	15	99.9	98.0	Mist eliminator wash
Aug.	744	744	15	100	98.0	Mist eliminator wash
Sept.	720	690	30	95.9	95.7	Mist eliminator wash
Oct.	744	744	36	100	95.2	Fan vibration
Nov.	720	720	11	100	98.4	Mist eliminator wash
Dec.	744	715	29	96.1	100	
Jan. 1976	744	744	0	100	100	
Feb.	672	664	32	95.4	95.3	Mist eliminator wash
Mar.	744	687	0	92.3	100	
Apr.	720	219	0	30.0	100	
May	744	744	0	100	100	
June	720	720	0	100	100	
July	744	744	0	100	100	

* Due to troubles of FGD unit.

† B/A (%)

§ (B-C)/B (%)

Continued

TABLE 4-7 (CONTINUED). PERFORMANCE OF THE NO. 1 UNIT, TAKASAGO PLANT

Month	Hours			Boiler availability (%)†	FGD operability (%)§	Remarks
	Total (A)	Boiler operation (B)	FGD stop (C)*			
Aug. 1976	744	744	0	100	100	
Sept.	720	720	0	100	100	
Oct.	744	744	62	100	91.7	Cleaning of 1st scrubber
Nov.	720	720	5	100	99.3	Repair of duct
Dec.	744	744	8	100	98.9	Repair of spray pipe
Jan. 1977	744	744	5	100	99.7	Cleaning of 1st scrubber
Feb.	672	672	0	100	100	
Mar.	744	0	0	0		Annual maintenance of boiler
Apr.	720	513	0	71.3	100	
May	744	744	10	100	98.2	Fan vibration
June	720	720	0	100	100	
July	744	717	0	96.2	100	Cleaning of 1st scrubber
Aug.	744	744	0	100	100	
Sept.	720	720	0	100	100	
Oct.	744	744	43	100	94.3	Cleaning of scrubbers & reactors
Nov.	720	720	0	100	100	
Dec.	744	744	0	100	100	
Jan. 1978	744	744	0	100	100	Cleaning of 1st reactor

* Due to troubles of FGD unit.

† B/A (%)

§ (B-C)/B (%)

TABLE 4-8. PERFORMANCE OF THE NO. 2 UNIT, TAKASAGO PLANT

Month	Hours: Total (A)	Hours: Boiler operation (B)	Hours: FGD stop (C)*	Boiler availability (%)†	FGD operability (%)§	Remarks
Mar. 1976	744	744	0	100	100	
Apr.	720	720	0	100	100	
May	744	216	0	29	100	
June	720	632	0	88	100	Annual maintenance of boiler
July	744	744	0	100	100	
Aug.	744	744	0	100	100	
Sept.	720	720	0	100	100	
Oct.	744	744	43	100	94.2	Duct cleaning
Nov.	720	720	0	100	100	
Dec.	744	744	5	100	99.3	Repair of gypsum conveyor
Jan. 1977	744	744	0	100	100	
Feb.	672	672	79	100	88.3	Cleaning of pH controller
Mar.	744	744	10	100	98.7	Cleaning of duct & pH controller
Apr.	720	720	0	100	100	
May	744	384	0	51.6	100	
June	720	24	0	32.9	100	
July	744	744	0	100	100	
Aug.	744	744	0	100	100	
Sept.	720	720	0	100	100	
Oct.	744	744	0	100	100	
Nov.	720	720	78	100	89.1	Cleaning of pH controller and reactor
Dec.	744	744	0	100	100	
Jan. 1978	744	744	0	100	100	

* Due to FGD troubles.

† B/A (%)

§ (B-C)/B (%)

deposited in the duct between the first and second scrubbers. Recently, a new mist eliminator was installed in the No. 1 scrubber. This mist eliminator is currently being washed with fresh water and circulating liquor as is the mist eliminator in the No. 2 unit.

The No. 1 unit purges 5 tons/hr of wastewater to maintain the chlorine concentration in the circulating liquor below 8,000 ppm. Both units purge 10 tons/hr of wastewater due to the use of fresh water for washing the mist eliminators.

Emission of SO_x from the station is restricted within 400 Nm^3/hr by an agreement with the local authorities. The amount is equivalent to about 220 ppm of SO_x in flue gas at a full load of the two boilers. By the total mass regulation which is to be applied from April 1978, the amount will be reduced to 243 Nm^3/hr, or about 136 ppm, at full load.

When one of the FGD units was shutdown, the boiler was operated at half load without FGD if the other FGD unit was in operation. The SO_x regulation could still be met in this way. Only on two occasions--in September 1975 and February 1976--the No. 1 boiler had to be shut down for about 30 hours each due to FGD trouble. After April 1978, however, the boiler will have to be shut down whenever the scrubber is not in operation.

Economics--

The capital cost for the two units was 9.3 billion yen. The units are operated by 3 persons per shift plus three persons working in the daytime for maintenance. The operation cost including 7 years depreciation and gas reheating to 85°C

is 1.19 yen/kWh, while the power cost is 6.86 yen/kWh including 15 years depreciation excluding FGD.

Evaluation--

The process is characterized by the production of high-purity gypsum by limestone scrubbing without using sulfuric acid. The slurry pH is reduced as the slurry passes through four towers, contacting flue gas. When perfect oxidation is not required as it is not in the U.S., two or three towers may be sufficient and no catalyst may be needed.

The pressure drop through the system is sharp resulting in a relatively large power consumption, because a venturi is used to attain a high particulate removal efficiency. For a new coal-fired boiler, it may be preferable to install a highly efficient ESP with an FGD system with a smaller pressure drop.

4.2.3 Isogo Plant, EPDC (Chemico-IHI Limestone-gypsum Process

Characteristics--

Isogo Power Station of Electric Power Development Co. (EPDC) has two 265 MW coal-fired boilers and is located in the heavily populated Yokohama/Tokyo area. Because of the unusual situation, the most stringent controls for pollution prevention have been required. Since several years ago, the station has used coals with a sulfur content as low as 0.3%, and electrostatic precipitators. Since further reduction of SO_x and particulates has been required, an FGD plant using the Chemico-IHI limestone-gypsum process was completed in March 1976 for the No. 1 boiler. Another was completed in May 1976 for the No. 2 boiler. The units were installed by Ishikawajima-Harima Heavy

Industries (IHI). After the plants were installed, coals with 0.6 - 1.0% sulfur have been used.

The Chemico Venturi scrubber was selected because of the high particulate removal efficiency; the electrostatic precipitator is not quite effective for a low sulfur coal and the particulate content of the flue gas reaches 1.5 g/Nm^3.

Two single-stage Chemico scrubbers were installed in series to reduce SO_2 from about 500 to 30 ppm and particulates to below 0.1 g/Nm^3.

A gypsum by-producing process was chosen because there is no space to throw away sulfite sludge. To lower the slurry pH to about 3.5 in order to promote the oxidation, the standard process in Japan, addition of sulfuric acid, has been used. This method was chosen partly because of its simplicity and partly because of the low inlet concentration of SO_2, which makes it difficult to reduce the pH by installing additional reactors as in the Mitsui-Chemico process.

Process Description--

A flowsheet of the process is shown in Figure 4-6. Operation parameters are shown in Table 4-4. A limestone slurry is prepared with powdered limestone (325 mesh pass) using fresh water. The use of circulating liquor was found to lower the reactivity of limestone. The slurry is fed to the second scrubber, where the pH of the circulating slurry is maintained at 6.0. A portion of the circulating slurry is sent to the first scrubber, where the pH is kept at 4.5. Flue gas is first fed to the first scrubber, where 40 - 60% of the SO_2 is absorbed, and then to the second scrubber, where 50 - 30% of the SO_2 is absorbed. The overall SO_2 removal efficiency reaches 90%.

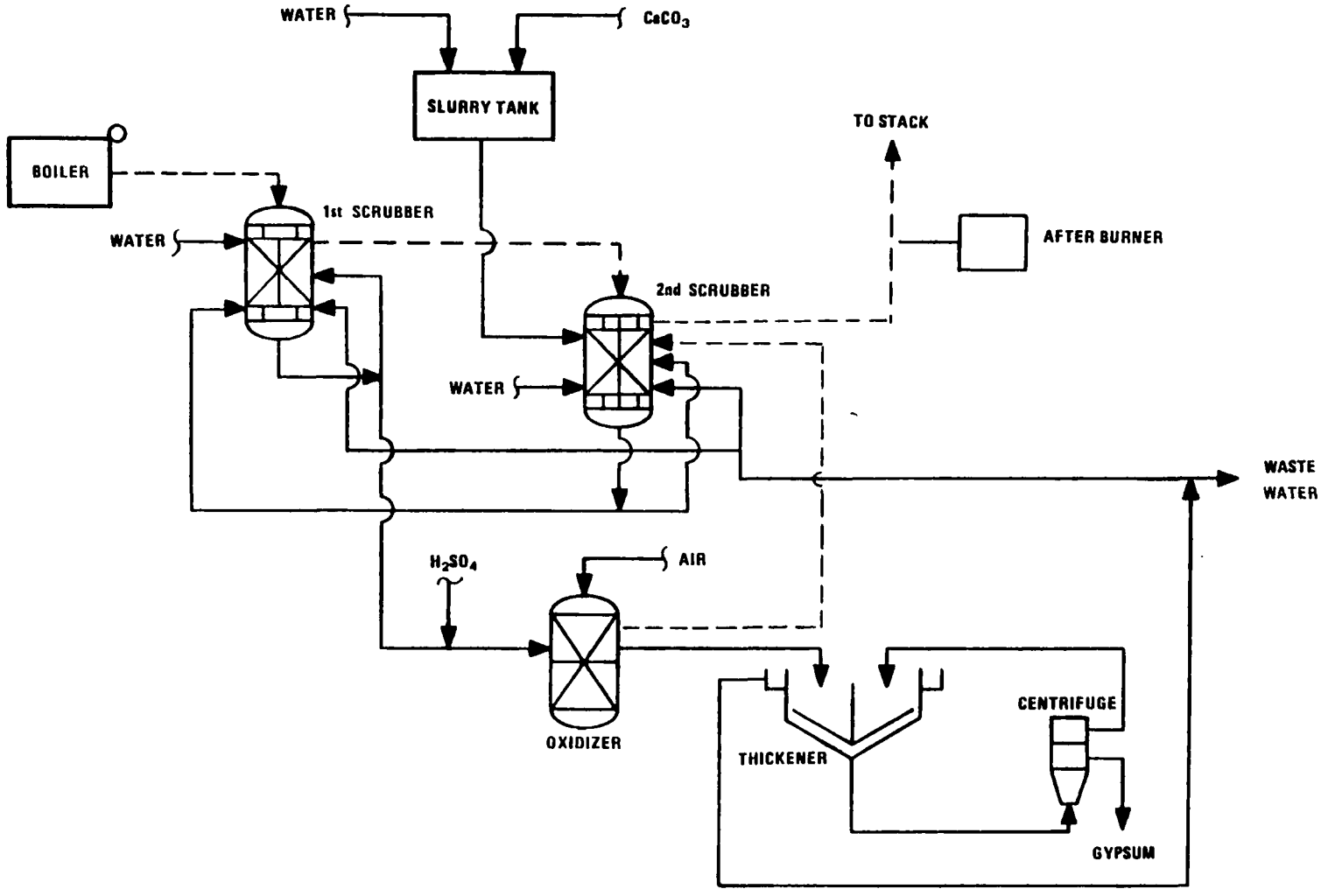

Figure 4-6. Flow sheet of Isogo plant, EPDC.

The slurry discharged from the first scrubber is sent to a pH adjusting tank, where the pH is lowered to about 3.5 by addition of H_2SO_4; unreacted limestone is entirely decomposed here. The acidulated slurry is fed to an oxidizer, where calcium sulfite is oxidized to gypsum by air bubbles generated by the 'Smoke Atomizer' invented by IHI.

The gypsum slurry is sent to separators (superdecantor, a continuous type centrifuge) through a thickener. The by-produced gypsum contains about 15% moisture and 15 - 20% fly ash. It has been sold for construction material production. Although it has a fairly low purity, the gypsum is still useful as long as the composition does not fluctuate appreciably.

Most of the liquor discharged from the thickener and decantors is sent to the first stage absorber, while a portion (10 tons/hr/unit) is purged to prevent the accumulation of chlorine in the circulating liquor; the chlorine concentration is kept at 5,000 ppm.

The wastewater first undergoes standard treatments: raising the pH, followed by precipitation, filtration, and neutralization. Since the liquor contains a small amount of dithionate ion (S_2O_6), which causes COD, the liquor is passed through two towers in series containing a resin which absorbs the dithionate. This treatment reduces the COD of the liquor to below 10 ppm, conforming to regulations.

The plant specifications and main components are listed in Tables 4-9 and 4-10.

TABLE 4-9. PLANT SPECIFICATIONS

Boiler	
Type	FW Single Drum radiation reheat, natural circulation and indoor
Evaporation rate	840 T/hr each
Flue gas volume	879,100 Nm^3/hr (MCR) each
Fuel	Coal
Flue gas temperature	143°C (AH outlet)
Draft control	Balanced draft
Manufacturer	Ishikawajima-Harima Heavy Industries Co., Ltd.
Flue Gas Desulfurization system	
Type	IHI-CHEMICO type, Limestone liquid scrubbing/gypsum recovery
Gas volume	900,000 Nm^3/hr (MCR) - 450,000 Nm^3/hr (night hours) each
Efficiency of SO_2 removal	90%
Efficiency of dust removal	96.7%
Coal composition	Inherent water 4.2% Ash content 16.0% Calorific value 6,200 kcal/kg Sulfur content 0.2 - 0.6%
Absorbent	Limestone 50 T/D each
By-product	Gypsum Approx. 120 T/D each
Gas reheating system	After-burning
Total area of installation	Approx. 8,000 m^2
Manufacturer	Ishikawajima-Harima Heavy Industries Co., Ltd.

TABLE 4-10. MAIN EQUIPMENT

Absorbent supply process	
Limestone silo	1,000 tons (common use for No. 1 and No. 2 boilers)
Make-up pump	3 sets
Absorption process	
1st stage absorber	1 stage Venturi Scrubber 1 set
2nd stage absorber	1 stage Venturi Scrubber 1 set
Boost up fan	Dual suction turbo-fan direct coupled to motor shaft
Gas volume	13,400 m^3/min each
Draft	820 mm H_2O
Motor power	2,400 kW x 2 sets/unit
Circulation pump	210 kW x 5/unit 195 kW x 5/unit
Gypsum production process	
Oxidation tower feed tank	Vertical cylindrical type made of carbon steel - 1 set
Oxidation tower	Vertical cylindrical type made of carbon steel - 2 sets/unit
Oxidation blower	Roots blower
Air volume	50 Nm^3/min each
Draft	20,000 mm H_2O
Motor power	200 kW x 3 sets/2 units
Thickener	Sedimentation and Concentration type - 1 set
Dehydrator	Screw decanter type
Solid content	1.05 T/hr x 4 sets/unit
Gas reheater	Horizontal cylindrical type
After-burning furnace	2,600 kg/hr - 1 set

Performances and Economics--

The FGD plant with two units has been operated by 3 persons per shift. In the daytime, one more person is assigned to each unit for chemical analysis and maintenance work. The superdecantors have often had troubles requiring frequent servicing. The slurry circulation pumps need repair every few months. Since the maintenance work can be done while the FGD plant is in operation, operability has been kept at 100%.

The plant cost ¥11 billion in 1976. The boilers have been operated at full load in the daytime and at about half load at night. The two units daily consume about 100 tons of $CaCO_3$ and produce 240 tons of gypsum. In addition, the plant consumes about 7 tons/day of 35% NaOH liquor and 0.7 ton/day of 98% H_2SO_4.

Evaluation--

Operability of the plant has been 100%, proving that over 90% removal of SO_2 in gas from a low-sulfur coal can be carried out quite well by a suitable design and operation of an FGD plant. The superdecantor seems troublesome; a batch type centrifuge may be more reliable.

The reduced reactivity of limestone discovered when circulating liquor was used for slurry preparation has not been experienced in other plants for coal-fired boilers, including the Takasago and Takehara plants. Impurities, such as fluorine, which reduce the reactivity may be present in a considerable amount in the liquor because of the relatively large fly ash content or due to the type of coal.

4.2.4 Takehara Plant, EPDC (Babcock-Hitachi Limestone-Gypsum Process)

Outline--

Takehara Station, EPDC, with a 250 MW coal-fired boiler and a 350 MW oil-fired boiler, faces the Seto Inland Sea in an area with no large cities and with mild regulations. SO_x emissions are restricted by the Central Government below 468 and 503 Nm^3/hr for the No. 1 and No. 2 boilers, which are equivalent to 600 and 620 ppm, respectively, at full load. By an agreement with the local government, emission from the No. 1 boiler is restricted below 195 Nm^3/hr or 240 ppm. The performance and regulations are listed in Table 4-11.

The No. 2 boiler burns 1%-sulfur oil and has no FGD system. The No. 1 boiler uses a blend of domestic coals with a sulfur content of 2% and gives a flue gas with 1,550 - 1,650 ppm SO_x. An FGD system using the Babcock-Hitachi limestone-gypsum process went into operation in February 1977 to treat flue gas from the No. 1 boiler. Specifications of the electrostatic precipitator and the FGD unit for the No. 1 boiler are shown in Table 4-12.

A flowsheet of the FGD unit is shown in Figure 4-7. The unit has two trains of scrubber systems, a reactor for adjusting pH by adding sulfuric acid, oxidizers, a thickener, and gypsum centrifuges. The process is similar to that of the Tamashima plant, Chugoku Electric.[16]) The operation parameters are shown in Table 4-4. Over 93% of SO_2 and dust are removed with a total pressure drop of 950 mmH_2O and power consumption of 3.3% of the power generated by the boiler. The by-product gypsum contains about 10% moisture after being centrifuged, and is sold for cement and wallboard.

TABLE 4-11. BOILERS AT TAKEHARA STATION (PERFORMANCE AND REGULATIONS)

		No. 1 Boiler	No. 2 Boiler
1.	Installed unit capacity	250 MW	350 MW
2.	Initial year of operation	1967	1974
3.	Fuel	Coal	Oil
4.	Annual plant factor	75%	70%
5.	Annual plant efficiency	37.2%	38.1%
6.	Design fuel analysis		
	Heating value (high, dry)	6,000 kcal/kg	10,650 kcal/kg
	Surface moisture	7.0%	
	Inherent moisture (dry)	2.4%	
	Hydrogen (")	4.1%	12.5%
	Sulfur (")	2.0%	1.0%
	Nitrogen (")	1.0%	
	Ash (")	23.0%	
7.	Plant efficiency (gross)	38.5%	39.3%
8.	Fuel consumption (as fired)	100,100 kg/hr	71,900 kg/hr
9.	Flue gas		
	Volume (wet)	809,000 Nm^3/hr	917,000 Nm^3/hr
	Volume (dry)	755,000 Nm^3/hr	815,000 Nm^3/hr
	Excess air	29%	16%
10.	Air pollutants		
	Sulfur oxides	468 (195) Nm^3/hr 600 (240) ppm	503 Nm^3/hr 620 ppm
	Nitrogen oxides	345 Nm^3/hr 420 ppm	156 Nm^3/hr 180 ppm
	Particulate matter	302 (76) kg/hr 0.4 (0.1) gram/Nm^3	41 kg/hr 0.05 gram/Nm^3
11.	Wastewater		
	pH	6.5 - 8.5	
	C.O.D.	10 ppm	
	S.S.	10 ppm	
	Oil	1 ppm	
12.	Condenser cooling water temperature rise	7°C	
13.	Noise		
	At boundary limit 6:00 a.m. 10:00 a.m. Midnight	 60 phon (A) 50 phon (A)	

TABLE 4-12. AIR POLLUTION CONTROL FACILITY
(NO. 1 BOILER, TAKEHARA STATION)

1. Dust collector	
Type	Electrostatic precipitator
Capacity (at 250 MW)	
Gas volume	793,300 Nm^3/hr
Gas temperature	140°C
Dust load (entering E.P.)	18 $grams/Nm^3$
Dust load (leaving E.P.)	0.36 $grams/Nm^3$
Efficiency	98%
2. SO_2 removal and recovery system	
Type	Venturi wet scrubber, B. & W. type
	Multi-stage absorbing tower
Scrubbing and absorbing liquid	Limestone slurry
Crystallizer	Sulfuric acid injection and air blowing
Capacity	
Gas volume (wet)	852,000 Nm^3/hr
Gas volume (dry)	795,000 Nm^3/hr
Gas temperature	150°C
SO_2 (inlet)	1,730 Nm^3/hr
SO_2 (outlet)	100 Nm^3/hr
Dust (inlet)	600 Nm^3/hr
Dust (outlet)	50 Nm^3/hr
Raw water consumption	1,350 tons/day
Limestone consumption	6,140 kg/hr

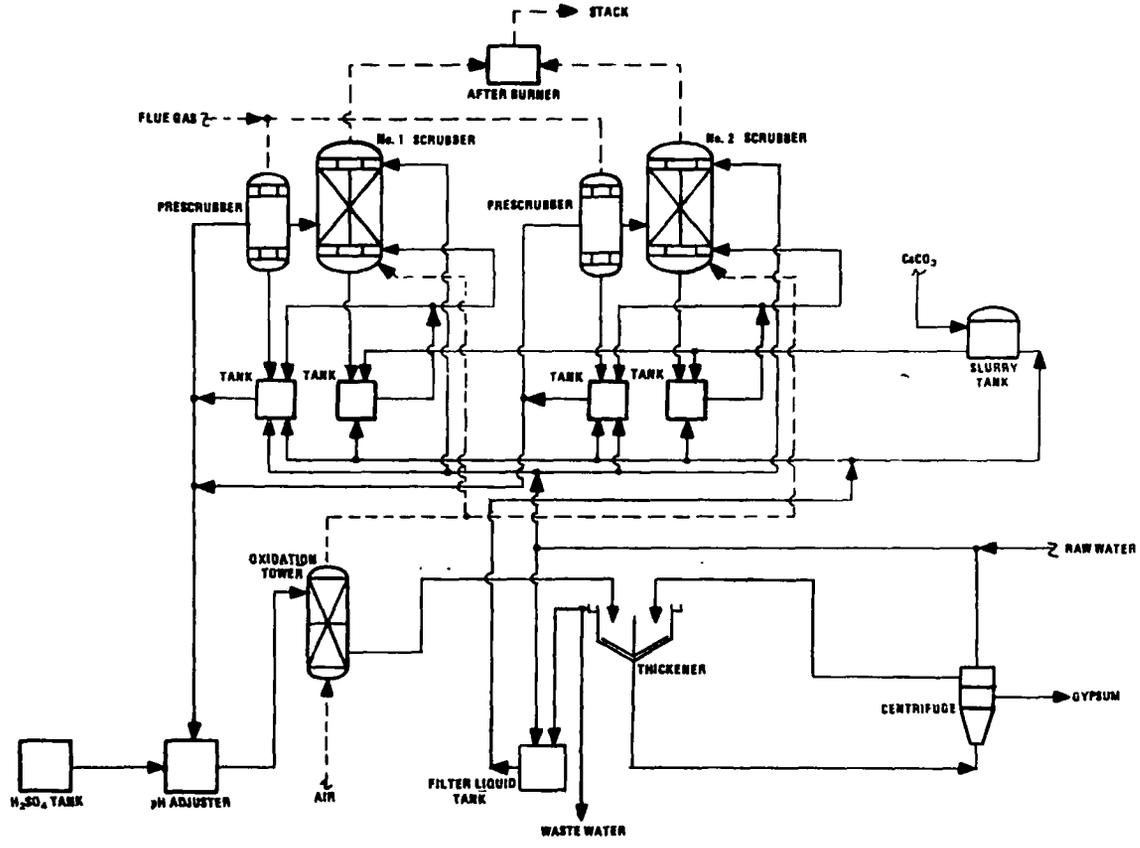

Figure 4-7. Flow sheet of Takehara plant, EPDC.

Performance of FGD System--

The No. 1 boiler has been operated at full load except at night when the load is reduced to 100 - 160 MW. The major problem with the FGD system was the plugging of a strainer in the slurry circulation tank placed at the bottom of the scrubber. The mist eliminator is of the pipe-with-fin type with a small pressure drop and is easily washed; however, it does not seem to be highly efficient. Scaling problems were eliminated with the mist eliminator, but were experienced at the gas reheating section due to the mist.

Since the start-up in February 1977, the FGD plant was operated for 5,396 hours until the end of September 30 when the boiler was shut down for annual maintenance. During the above period, the scrubber operation was stopped three times, while the boiler was operated at half load using a mixture of coal and a low-sulfur oil in order to meet the emission standards. On two occasions, one of the scrubber trains was shut down for a total of 70 hours to clean up the strainer. On the other occasion, both of the scrubbers were shut down to remove the scale in the reheating section. The operability of the FGD system was 97.4% for two-scrubber operation and 98.6% including one-scrubber operation hours.

In order to eliminate the strainer plugging problem, modifications were made during the boiler shutdown period. A gypsum circulation line was installed to reduce scale formation. The strainers were moved and placed outside the scrubber for easy cleaning. An increase in operability is expected from these modifications.

The mist eliminator is washed with fresh water. Chlorine in circulating liquor is maintained at 3,500 ppm by purging 10 tons/hr of wastewater.

Economics--

The total investment for the FGD unit was 7.2 billion yen. The unit is operated by two persons per shift plus three persons per shift for maintenance. Each month it consumes 3,200 - 3,900 tons of limestone ground so that over 95% passes 325 mesh screen, 70 - 107 kiloliters of 98% sulfuric acid, and 40,000 - 46,000 tons of water, and it by-produces 6,140 - 6,860 tons of gypsum.

The FGD operation cost is 1.73 yen/kWh including 7 years depreciation and reheating to 130°C. The power cost including FGD is estimated at 8.82 yen/kWh. The power cost for the No. 2 boiler is estimated at 7.92 yen/kWh. The No. 2 boiler burns medium-sulfur oil. By using low-sulfur oil, the cost will approach that by the No. 1 boiler with FGD. The FGD operation cost based on 15 years depreciation and reheating to 80°C, as in the U.S., is estimated at 1.1 - 1.2 yen/kWh, which may be less than the difference between the use of low and high sulfur fuels.

Evaluation--

The FGD unit is well designed. The operability is expected to exceed 99% by the modification of the system. Power consumption, however, is pretty high. For new coal-fired boilers, it may be preferable to install an electrostatic precipitator with higher efficiency and a scrubber with a lower pressure drop and smaller power consumption.

4.2.5 Omuta Plant, Mitsui Aluminum

The Omuta plant has two FGD units constructed by Mitsui Miike using the Chemico Scrubbers. The first unit was completed in 1972 to by-produce a throw-away sludge using carbide lime. The second unit uses a limestone-gypsum process because the supply of carbide lime is getting short and the sludge pond is almost full.

The first unit has two two-stage Chemico scrubbers in parallel. In the past, 70% of the flue gas from a 156 MW coal-fired industrial boiler was treated by using one of the scrubbers. The other scrubber, a standby, was not used because the plant operated smoothly without any appreciable scaling problem. Since a few years ago, however, as regulations were tightened, both scrubbers have been in use in parallel to treat the entire quantity of gas from the boiler. The plant is famous and has been described by many authors.[10,14,15]) Recent operation parameters and operation hours of the boiler and FGD plant are shown in Tables 4-4 and 4-13, respectively.

The FGD operability and availability have been kept at 100% except during the short period of boiler shutdown. The smooth operation is attributable to a large extent to an unsaturated mode of operation, which prevents the formation of scale-causing gypsum. It is possible that some ingredient in the carbide lime works as an oxidation inhibitor to prevent the formation of gypsum, as was observed with the carbide lime used by Louisville Gas and Electric, U.S.

The second unit, which treats gas from a 175 MW coal-fired industrial boiler, is similar to the Takasago plant, EPDC, (see Section 4.2.2) except that a catalyst is used to increase SO_2 removal efficiency and to promote oxidation. The unit has

operated at 100% operability since the start-up in July 1975, except for 10 days of shutdown in the fall of the year. During the shutdown, gypsum deposits formed due to mist carry over are cleaned out of the stack. The boiler as well as the FGD unit has been operated continuously for 11 months at the constant load and then shut down for a month for maintenance.

SO_2 in the flue gas is reduced from 2,200 - 2,500 ppm to about 200 ppm to meet the regulations. The total investment for the second unit was 4.0 billion yen including civil works.

TABLE 4-13. OPERATION HOURS OF OMUTA PLANT
MITSUI ALUMINUM (1st Unit)

	Hours			Availability (%)		Operability
	Total (A)	Boiler Operation (B)	FGD Operation (C)	Boiler (B/A)	FGD (C/A)	(C/B) (%)
Sept. 1976	720	204*	191.6*	28.3*	26.6*	93.4
Oct.	744	744	744	100	100	100
Nov.	720	720	720	100	100	100
Dec.	744	744	744	100	100	100
Jan. 1977	744	744	744	100	100	100
Feb.	672	672	672	100	100	100
Mar.	744	744	744	100	100	100
Apr.	720	720	720	100	100	100
May	744	744	744	100	100	100
June	720	720	720	100	100	100
July	744	744	744	100	100	100
Aug.	744	744	744	100	100	100

*The short operation hours are due to annual shutdown of the boiler.

4.2.6 Matsushima Plant, EPDC

A basic flowsheet for the FGD unit of the Matsushima plant, EPDC, to be constructed in 1979 is shown in Figure 4-8. The FGD unit will treat flue gas from a 500 MW coal-fired boiler which will mainly burn imported coal with about 1.6% sulfur. The plant will be equipped with a hot electrostatic precipitator, which is suitable for the coal. In case flue gas denitrification becomes necessary in the future, the hot precipitator will facilitate the application of selective catalytic reduction.

Gas leaving the air preheater at about 150°C will pass through gas-gas heat exchangers, as was described in Section 3.5, and then into a tower for further dust removal and cooling by a wet system. The liquor leaving the tower, which contains fly ash, will be treated separately from the scrubber liquor in order to obtain high purity gypsum. A limestone slurry will be used in the scrubber. The pH of the slurry discharged from the scrubber will be lowered by adding sulfuric acid.

A similar system may be used for two other FGD plants for coal-fired boilers. Negotiations with vendors are in progress. It is likely that the Chemico type spray scrubber will be used at the Matsushima plant.

4.2.7 Other Plants

An FGD plant using the MHI limestone-gypsum process will be completed in 1979 at Shimonoseki Station, Chugoku Electric, to treat flue gas from a coal-fired boiler (see Section 4.3.2).

Hokkaido Electric will install a 500 MW coal-fired boiler at Higashitomakomai, which will burn a local low-sulfur

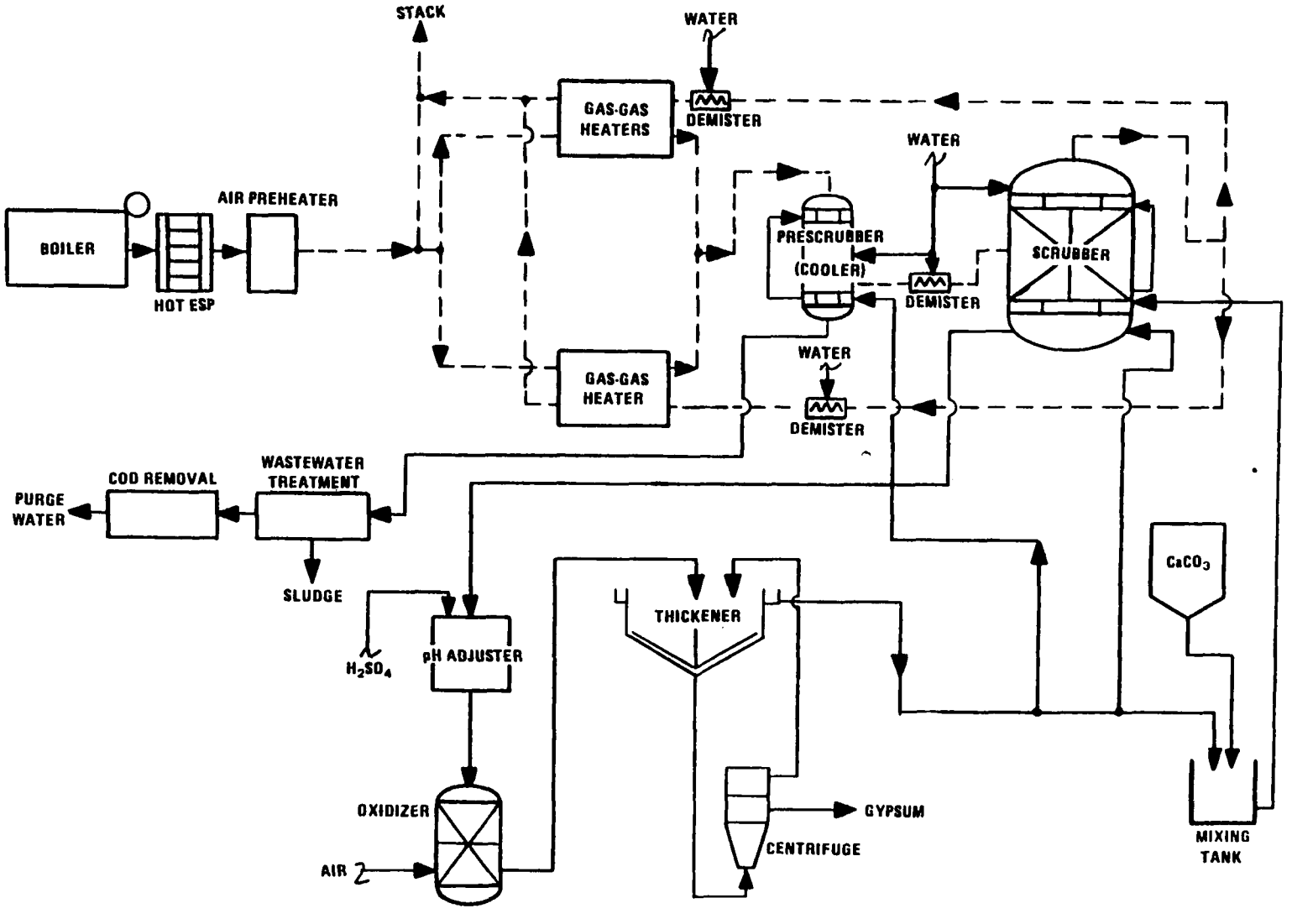

Figure 4-8. Flow sheet of Matsushima plant, EPDC.

coal. Half of the flue gas from the boiler will be treated by a limestone-gypsum process after being subjected to NO_x removal by selective catalytic reduction.

Several other coal-fired boilers with a unit capacity of 700 - 1,000 MW are planned, all of which will need FGD.

4.3 OPERATION OF FGD PLANTS WITH MHI SCRUBBERS FOR OIL-FIRED UTILITY PLANTS

4.3.1 Owase-Mita Plant, Chubu Electric (MHI Lime-Gypsum Process[12,13])

Characteristics--

Owase is a small pretty town with a population of about 30,000. One side faces Owase Bay and three sides are surrounded by hills. The power station, with two 375 MW oil-fired boilers, was constructed on reclaimed land on the bay under a pollution control agreement with the town authorities.

For FGD, the lime-gypsum process was adopted because lime can be brought in by special dump trucks and gypsum can be shipped out by boat. Lime was preferred to limestone because of the smaller weight. The two-absorber system of Mitsubishi Heavy Industries (MHI) was chosen in order to obtain a high SO_2 removal efficiency and to eliminate the use of sulfuric acid, which is required in most other lime-limestone gypsum processes to lower the pH of calcium sulfite slurry prior to oxidation. The above choices were made due to the inconvenience of transportation around the plant. The plant's siting conditions are different from those of most FGD plants in Japan, which are located in and around large industrial districts.

Another characteristic of the FGD system is the installation of a unit to remove ammonia from wastewater. The unit was installed for the following reason:

> Japanese utility power companies inject a small amount of ammonia into 140 - 150°C flue gas from an oil-fired boiler in order to protect the electrostatic precipitator from corrosion. Ammonia reacts with SO_3 and H_2O in the gas to form fine crystals of ammonium sulfate which are caught by the precipitator. The gas leaving the precipitator contains less than 10 ppm ammonia, which is caught by an FGD system and accumulates in scrubber liquor. Usually the ammonia is purged with wastewater because the amount is not large. In the case of Owase-Mita station, the FGD capacity is fairly large, and moreover, the wastewater regulations are quite stringent. Therefore, an ammonia stripping unit was installed.

Process--

There are two equal FGD units for No. 1 and No. 2 boilers with a capacity of 375 MW each. The No. 1 FGD unit went into operation in April and the No. 2 in June 1976. A flowsheet of a unit is shown in Figure 4-9. Flue gas (1,200,000 Nm^3/hr) from a 375 MW oil-fired boiler containing 1,600 ppm SO_2 is treated by two trains of scrubber systems. Lime slurry preparation, gas reheating, gypsum handling, wastewater treating, etc. are all in one train. Each of the scrubber trains includes a cooler and the first scrubber in one tower,

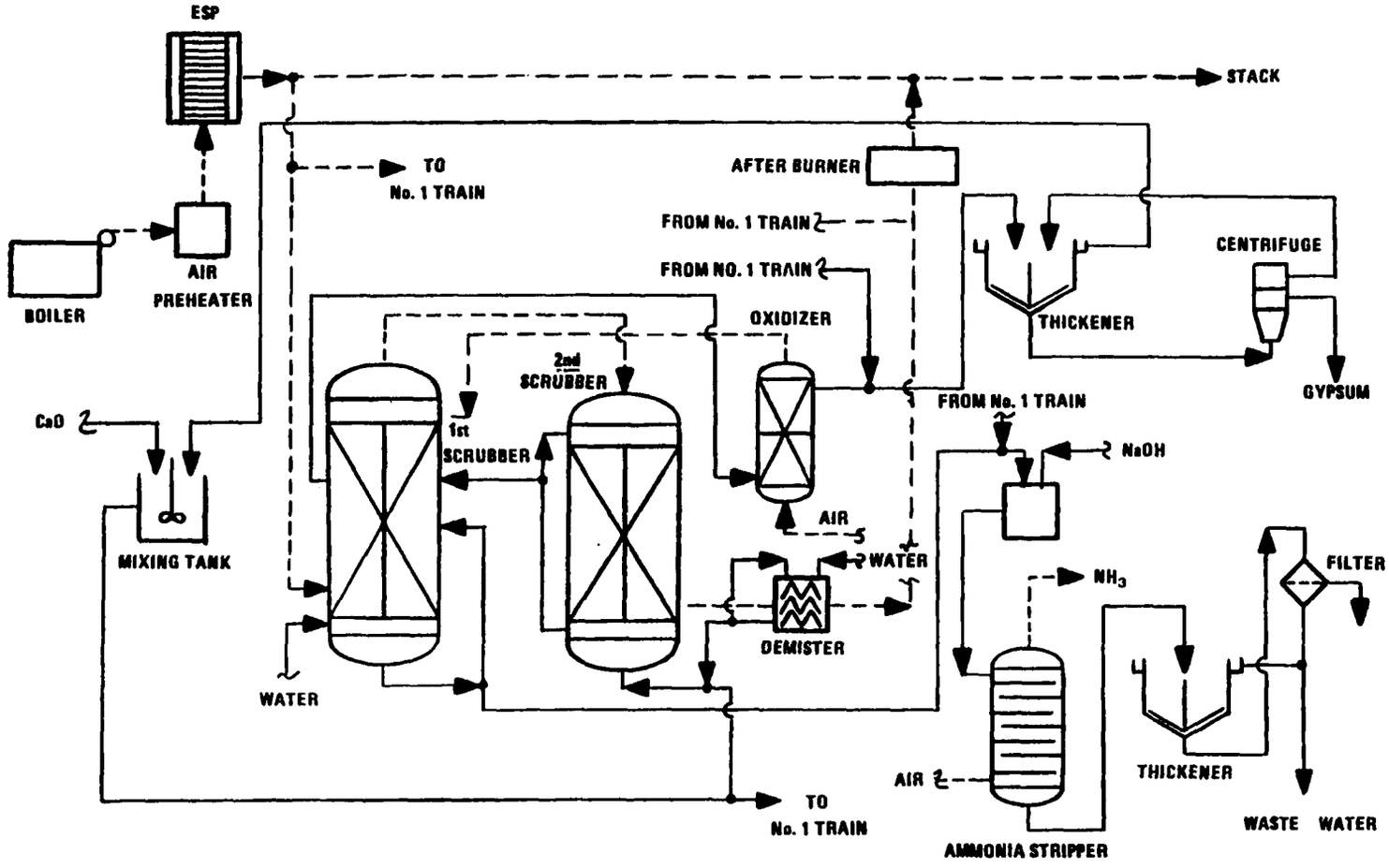

Figure 4-9. Flow sheet of Owase-Mita plant, Chubu Electric.

the second scrubber in a separate tower, and a mist eliminator. Both scrubbers are of standard MHI type with plastic grid packings.

The operation parameters are shown in Table 4-4. A lime slurry is fed to the second absorber in which the gas and the slurry flow in parallel. The slurry discharged from the second scrubber is fed to the first scrubber where the reaction between lime and SO_2 goes to completion and the pH of the slurry is lowered to about 4; this pH is suitable for the oxidation of calcium sulfite.

The slurry discharged from the first scrubber is sent to an oxidizer, where calcium sulfite is oxidized to gypsum by air bubbles generated by JECCO rotary atomizers. The oxidizer has a facility for sulfuric acid addition but it has not been used so far because the pH of the slurry has been low enough. The gypsum slurry is sent to a thickener. The slurry discharged from the thickener with a concentration of 25% is centrifuged to by-produce gypsum with over 98% purity containing less than 10% moisture, which is shipped for wallboard and cement production. The filtrate from the centrifuge is fed to the thickener; the thickener overflow is used to prepare a lime slurry which is fed to the scrubber.

Virtually all of the ammonia and chlorine and a considerable portion of the dust in the flue gas are caught in the cooler by a water spray. The liquor discharged from the cooler is treated with sodium hydroxide to raise the pH and then fed to an ammonia stripping tower. The liquor, after ammonia removal, is neutralized with sulfuric acid, filtered and purged. About 3 tons/hr/unit of wastewater, containing about 15 ppm COD, 1 ppm SS with a pH of about 6.6, are purged.

The gas discharged from the second scrubber passes through a mist eliminator with Chevron type elements in the first stage and Euroform type elements in the second stage. Most of the mist is caught in the first stage and smaller particles are caught in the second stage. The Chevron elements are washed with a circulating liquor and the Euroform elements, which have higher efficiency but are more vulnerable to scaling, are washed with fresh water.

Operation--

Each FGD unit was designed to treat flue gas ranging from 450,000 to 1,200,000 Nm^3/hr (from 125 to 375 MW) and to follow the change of operation load at a rate of 10 MW/minute. The boilers are operated normally at full load and occasionally at 300 MW load at night.

The two FGD units (total 750 MW) are operated by 4 persons per shift (Table 3-13). Tables 4-14 and 4-15 show boiler and FGD operation hours and troubles encountered in a recent year. Operability of the FGD units was 98% for No. 1 and 98.9% for No. 2. Scaling of the mist eliminator has been a problem common to the two units and has required several hours of cleaning once in about 3 months. In addition, the scrubber of the No. 1 unit tends to scale slightly and undergoes cleaning once in about 6 months. For cleaning, one of the scrubber trains is shut down for several hours for water wash while boiler load is reduced to about a half.

The plant is fully automated and is easy to operate. After operating the FGD units for over 1 year, the power plant people found the FGD system easier to operate than the boiler.

TABLE 4-14. YEARLY OPERATION OF OWASE-MITA NO. 1 BOILER AND FGD UNIT

	Hours			Availability (%)		Opera-bility (%)	Remarks
	Total (A)	Boiler oper-ation (B)	FGD oper-ation (C)	Boiler B/A	FGD C/A		
Oct. 1976	744	20	20	2.7	2.7	100	Scheduled maintenance of boiler
Nov.	720	345	263	47.9	36.5	76.2	Low sulfur oil was used at boiler start-up
Dec.	744	717	717	96.4	96.4	100	
Jan. 1977	744	744	744	100	100	100	
Feb.	672	672	622	100	92.6	92.6	Maintenance of FGD power system
Mar.	744	701	701	94.2	94.2	100	
Apr.	720	637	626	88.5	86.5	98.3	Erosion of slurry circulation pipe
May	744	597	597	80.2	80.2	100	
June	720	720	720	100	100	100	
July	744	744	738	100	99.2	99.2	Mist eliminator cleaning
Aug.	744	744	744	100	100	100	
Sept.	720	679	679	94.3	94.3	100	
TOTAL =	8,760	7,320	7,171	83.5	81.9	98.0	

TABLE 4-15. YEARLY OPERATION OF OWASE-MITA NO. 2 BOILER AND FGD UNIT

	Hours			Availability (%)		Opera-bility (%)	Remarks
	Total (A)	Boiler oper-ation (B)	FGD oper-ation (C)	Boiler B/A	FGD C/A		
Oct. 1976	744	694	670	93.3	90.1	96.5	Mist eliminator cleaning
Nov.	720	720	720	100	100	100	
Dec.	744	744	742	100	99.7	99.7	Repair of supernatant circulating system
Jan. 1977	744	309	309	41.5	41.5	100	Scheduled maintenance of boiler
Feb.	672	0	0	0	0	0	Scheduled maintenance of boiler
Mar.	744	712	658	95.7	88.4	92.4	Use of low-sulfur oil at boiler start-up. Erosion of conveyor.
Apr.	720	720	720	100	100	100	
May	744	744	744	100	100	100	
June	720	714	714	99.2	99.2	100	
July	744	744	744	100	100	100	
Aug.	744	744	744	100	100	100	
Sept.	720	720	720	100	100	100	
TOTAL =	8,760	7,565	7,485	86.4	85.4	98.9	

Economics--

The total cost of the two units was 16 billion yen in 1976 in battery limits. The relatively high cost, 21,000 yen/kW, is due to special considerations for pollution prevention--over 95% SO_2 removal, two stage mist elimination, ammonia stripping, installation of noisy equipment indoors--and is also due to having a fully automated system to ensure smooth operation.

The plant (two units) consumes about 60,000 tons/year of lime and 3,500 tons/day of water to by-produce 180,000 tons/year of gypsum. Power consumption is 15,000 kW which is equivalent to 2% of the power generated, and is relatively low as shown in Table 4-4. The low power consumption is due mainly to the small pressure drop of the scrubber system by the use of a simple rough packing which is sufficient to ensure the high SO_2 removal efficiency. The SO_2 removal rate is determined by the dissolving rate of lime or limestone rather than by the absorption rate of SO_2. The total variable cost is about 2.5 billion yen/year. About half of the cost is for low-sulfur oil to reheat the gas to 140°C.

Evaluation--

The plant cost is relatively high because of the elaborate design. Operation has been carried out very well with a low man-hour requirement, achieving over 93% SO_2 removal and by-producing good-quality gypsum without using sulfuric acid.

The plant indicates that when dry NO_x removal of flue gas by ammonia (with or without catalyst) and wet lime/limestone FGD is combined, leak ammonia from the NO_x removal reactor will

be caught by a cooler (prescrubber) and may not appreciably affect the FGD system. So far the dilute ammonia gas obtained from the wastewater has been purged to air but it may be possible to recover it in a more concentrated form so that it can be recycled back to the flue gas.

4.3.2 Shimonoseki Plant, Chugoku Electric (MHI Limestone-Gypsum Process)

Shimonoseki Station, Chugoku Electric, has two boilers --No. 1 (175 MW) burning a mixture of 20% coal containing 0.7% sulfur and 80% heavy oil containing 1.2% sulfur, and No. 2 (400 MW) burning 2.7% sulfur heavy oil. The No. 2 boiler flue gas is treated by an FGD plant using the MHI limestone-gypsum process.

The station faces a straits between Honshu and Kyushu Islands, is not close to large cities and industrial regions, and is subject to relatively mild regulations by the Central Government and prefecture and city authorities as shown in Table 4-16.

FGD Plant--

The basic design of the FGD plant is similar to that of the Owase plant, Chugoku Electric (Section 4.3.1) except that the Shimonoseki plant uses limestone. The plant consists of two trains of scrubber systems, each of which has a cooler and two absorbers in series in order to attain over 98% SO_2 removal efficiency and to minimize sulfuric acid consumption. Major components are listed in Table 4-17. Operation parameters are shown below:

L/G 10.4 liters/Nm^3 (No. 1 and No. 2 absorbers each)

pH About 4.0 at No. 1 absorber outlet, 5-6 in No. 2 absorber

Slurry concentration 10% in absorbers

Pressure drop in total (actual) 240 mmH_2O

Power consumption (actual) 8,600 kW (2.15% of power generated)

Sulfuric acid consumption 0.1 ton/hr

The SO_x concentration, 1,500 ppm at the inlet, is reduced to 15 ppm by the scrubbing. The treated gas is heated to 140°C by a multitube type steam-gas heat exchanger. The tubes are made of stainless steel, have a heat transfer area of 4,000 m^2, and are equipped with soot blowers.

TABLE 4-16. REGULATIONS FOR SHIMONOSEKI STATION

Air Pollution Control		
k Value	2.7 (Ground level concentration 0.0047 ppm)	
SO_x	Below 412 Nm^3/hr	
Particulates	Below 130 kg/hr	
No. 1 boiler	Below 200 mg/Nm^3	
No. 2 boiler	Below 40 mg/Nm^3	
NO_x	Below 330 Nm^3/hr	
No. 1 boiler	Below 350 ppm	
No. 2 boiler	Below 170 ppm	
Floating particulates	Below 0.2 mg/Nm^3	
Water Pollution Control		
pH	5.8 - 8.6	
Suspended solids	Below 12 kg/day	
	Below 15 mg/liter	
Normal hexane soluble material		Below 0.8 kg/day Below 1 mg/liter
Chemical oxygen demand		Below 12 kg/day Below 15 mg/liter

TABLE 4-17. MAIN COMPONENTS OF SHIMONOSEKI PLANT

1.	Flue gas fan: (Radian type) 2	Capacity: 700,000 Nm^3/hr	
		Pressure drop: 500 mm H_2O	
			2,100 kW (10 pole)
2.	Cooler: 2	12,000 W x 8,000 L x 30,500 H	
3.	No. 1 absorber: 2	12,000 W x 6,000 L x 31,500 H	
		8 m grid packings	
4.	No. 2 absorber: 2	12,000 W x 9,000 L x 33,500 H	
		4 m grid packings with demister on the top	
5.	Steam gas heater: 2	Heating area: 4,000 m^2	
		Tube: Bare, stainless steel with soot blowers	
		Outlet gas temperature: 140°C	
6.	Cooler circulation pump: 2 x (2 + 1)	660 m^3/h x 35 mH	
		Rubber lined	
		132 kW x 6 p	
7.	No. 1 absorber circulation pump: 2 x 4	1,820 m^3/h x 30 mH	
		R.L. casing, stainless steel impeller	
		270 kW (6 pole)	
8.	No. 2 absorber circulation pump: 2 x 4		
		same as above except head 25 mH, 250 kW (6 pole)	
9.	Oxidation tower: 2	Capacity: 160 m^3	
		3,600 ϕ x 17,000 L	
		W/3 Rotary atomizers	
10.	Oxidation air compressor: 2	Screw type	
		7,000 Nm^3/hr x 7 kg/cm^2G	
		900 kW	
11.	Gypsum thickener: 1	Capacity: 550 m^3	
		Diameter: 14,000 ϕ	
		Rubber lined	
12.	Centrifuges: 9 + 1	Capacity: 2,000 kg/hr	
		Basket dimensions	1,520 ϕ x 650 H
		Main motor	37 kW x 6 p (12 p), pole change

Performance and Cost--

The FGD plant cost 11 billion yen (7.8 billion yen in battery limits including about 800 million yen for the gas reheater) while the total investment for the No. 2 boiler and the FGD plant was 44 billion yen. The plant went into operation in September 1977 after three months test run and has since been operated at 100% operability (at least until February 1978 when visited). The plant is operated by 4 persons per shift plus 3 persons in the daytime for handling limestone and gypsum.

The FGD operation cost is estimated at about 1.7 yen/kWh at a 70% load factor including 7 years depreciation and reheating to 140°C. Since the power cost without FGD is estimated at 9.9 yen/kWh with 0.12%-sulfur oil and 8.4 yen/kWh with 3%-sulfur oil, FGD does not give an economical advantage under the present situation with the relatively small cost difference of oils and the oversupply of gypsum. However, the operation cost based on 15 years depreciation and reheating to about 80°C, as in the U.S., is substantially less and is smaller than the cost difference of the oils.

FGD Plant to be Installed for the No. 1 Boiler--

Chugoku Electric has decided to install a limestone-gypsum process FGD plant using the MHI process for the No. 1 boiler. Construction will commence in early 1978, with commissioning scheduled for 1979. After completion of the plant, 2%-sulfur coal will be used for the boiler without mixing with heavy oil. Specifications for the FGD plant are as follows:

Inlet SO_x 1,700 ppm; Dust 1,000 mg/Nm^3;
HCl 100 ppm; HF 18 ppm

SO_2 removal efficiency 96%

A Ljungstrom type gas-gas heat exchanger is to be installed to reheat the gas to 105°C. Considerable savings of industrial water for cooling will also be attained by the use of the heat exchanger.

Evaluation--

The two scrubbing trains on the No. 2 boiler remove about 99% of SO_x using a limestone slurry and the plant has been operated at 100% operability. The plant has a standby each for the cooler circulation pump and for the centrifuge but no standby for the absorber or the absorber pump. The Karatsu plant (Section 4.9) has also been operated very smoothly with virtually 100% operability since start-up. MHI has been continuing extensive pilot plant tests with flue gases from various sources, including a coal-fired boiler, in comparison with operation data of the 34 commercial plants constructed by MHI. They seem to have established know-how for the high reliability of a system with high SO_2 removal efficiency at low power consumption.

4.4 OPERATION OF FGD PLANTS WITH THE MORETANA SCRUBBER

4.4.1 Characteristics of the Moretana Scrubber

The Moretana scrubber developed by Fujikasui Engineering Co. jointly with Sumitomo Metal has perforated plates without a weir and downcomer. They have a free space ratio of 0.25 - 0.6, which is larger than that of conventional perforated plates (about 0.2). Figure 4-10 compares the relationships of pressure drop and superficial gas velocity for a conventional perforated plant (curve a) and a Moretana plate with a free space ratio of 0.35 (curve b). With the conventional plate, pressure drop increases remarkably when gas velocity exceeds B, the flooding point, while with the Moretana plates, the increase

is mild above B until the velocity reaches the flooding point, C. The reason for the occurrence of Point B with the Moretana plate, however, is not clear. The range between B and C is called the "undulation region" and is suitable for scrubbing because good gas-liquid contact occurs in a state similar to boiling.

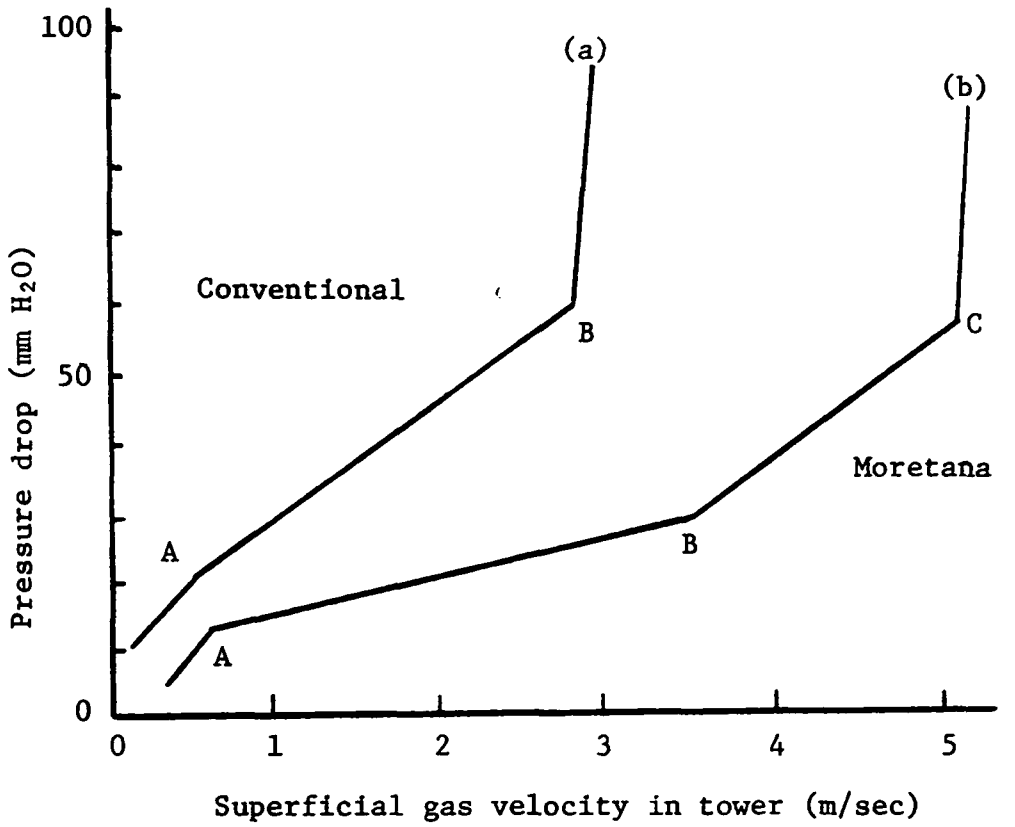

Figure 4-10. Characteristic curves with perforated plates.

This feature makes the Moretana scrubber very efficient also for removing particulates and NO_x. Usually a Moretana scrubber has 2-5 stages of plates. The large gas velocity and good contact allow the scrubber to treat a large amount of gas. The scrubber is designed to give a minimum pressure drop for a desired removal efficiency with a given composition of gas.

Patents have been issued in several countries including the U.S. JGC Corp. (Japan Gasoline Co.) and Toyo Engineering have been licensed to construct plants with the Moretana scrubber. Twelve FGD plants, including 9 larger ones (Table 4-3), 7 relatively small plants for simultaneous removal of SO_x and NO_x (12,000 - 100,000 Nm^3/hr), and 6 small plants (5,000 - 60,000 Nm^3/hr) for particulate removal, are in operation with the Moretana scrubber. Toyo Engineering will be constructing particulate removal units in the USSR.

4.4.2 Kashima Plant, Sumitomo Metal

Two of the largest Moretana scrubbers (unit capacity 1,000,000 Nm^3/hr) are in use at the Kashima Works, Sumitomo Metal, to treat flue gas from an iron-ore sintering machine. A flowsheet of the FGD plant is shown in Figure 4-11.

The flue gas from the sintering machine is relatively poor in SO_2 and rich in O_2 and ferric oxide dust. Ferric oxide catalyzes the oxidation of calcium sulfite in the scrubber and promotes the tendency of gypsum scale formation. Removal of ferric oxide dust at high efficiency by a cooler (prescrubber) with Moretana plates lowers the degree of oxidation and helps prevent scaling.

Operation parameters are shown in Table 4-4. A limestone slurry of about 7% concentration at a pH of 6.7 and with a stoichiometry of 1.05 is used to remove 93 - 95% of SO_2 and nearly 90% of dust. The calcium sulfite slurry discharged from the scrubber is sent to a clarifier and then to a pH adjusting tank, where the pH is adjusted to 4 by adding a small amount of H_2SO_4. The slurry is then sent to a Fujisawa-developed oxidizer, where the sulfite is converted to gypsum. The gypsum slurry is

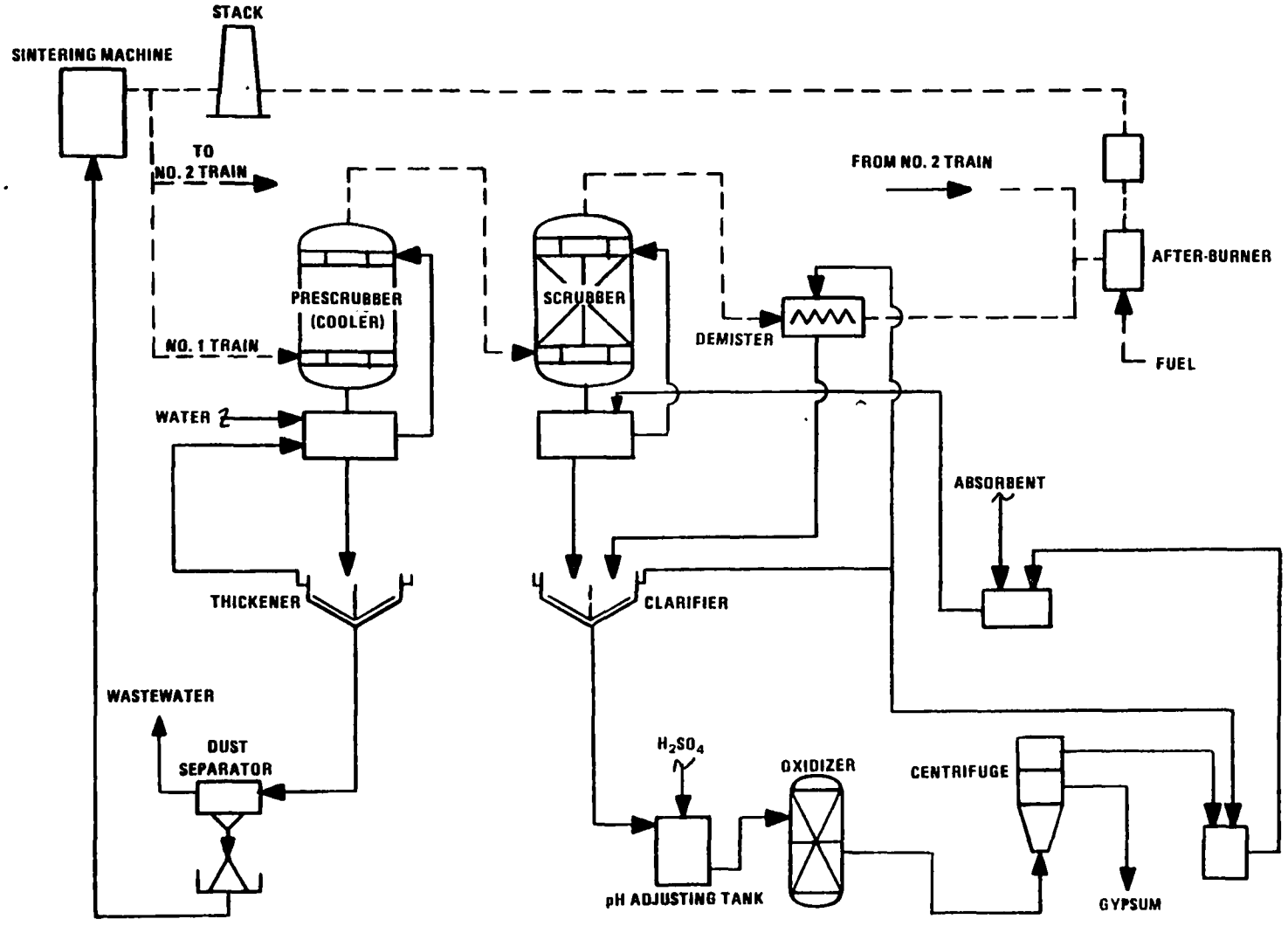

Figure 4-11. Flow sheet of Moretana process (Kashima plant, Sumitomo Metal).

centrifuged, and the filtrate is returned to the scrubber system. The by-product gypsum is sold for cement and wallboard production.

The discharge from the cooler is sent to a thickener. The overflow is returned to the cooler; the underflow is filtered. The filter cake is returned to the sintering machine, and the filtrate, about 60 tons/hr, is sent to a wastewater treatment system.

The operation hours of the sintering machine and the FGD plant in a recent year are shown in Table 4-18. The sintering machine has stopped operation for a few days a month. The FGD plants have been almost trouble-free. Although minor problems may occur, they can be solved during the shutdown of the sintering machine. The FGD plant normally continues to operate for several hours after the shutdown of the sintering machine, to prevent any SO_2 leakage from the machine. Therefore, the FGD operation hours always exceed the sintering machine operation hours. FGD availability (FGD operation hours percent of total hours) reaches 97%.

4.4.3 Takaoka Plant, Takaoka Kyodo Power

The Takaoka plant was constructed by JGC Corp., a licensee of the Sumitomo-Fujikasui process. The plant has a capacity of treating 330,000 Nm^3/hr of flue gas from an oil-fired utility boiler containing about 1,200 ppm SO_2. It went into operation in July 1976. A flowsheet of the process is shown in Figure 4-12. Major equipment is listed in Table 4-19.

In the first year of operation, scale formed on the Moretana plates and scrubber walls. This increased the pressure

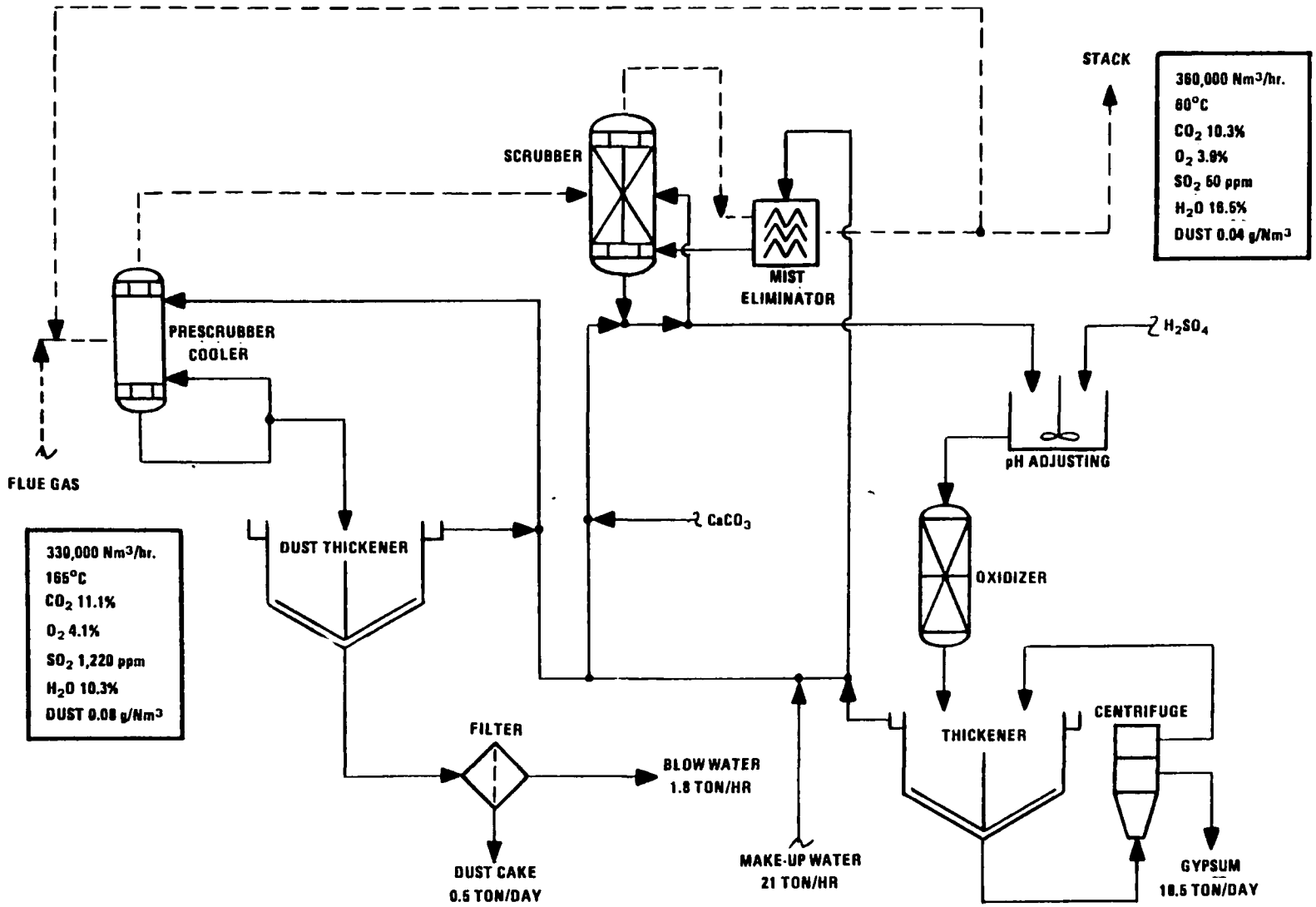

Figure 4-12. Flow sheet of Takaoka plant, Takaoka Kyodo Power.

TABLE 4-18. OPERATION HOURS (KASHIMA PLANT)

	Hours			Availability (%)		
	Total (A)	Boiler Operation (B)	FGD Operation (C)	Boiler (B/A)	FGD (C/A)	C/B (%)
Sept. 1976	720	655	675	91.0	93.8	103.1
Oct.	744	726	733	97.6	98.5	101.0
Nov.	720	699	707	97.1	98.2	101.1
Dec.	744	723	733	97.2	98.5	101.4
Jan. 1977	744	720	728	96.8	97.8	101.1
Feb.	672	657	660	97.8	98.2	100.5
Mar.	744	726	731	97.6	98.3	100.7
Apr.	720	702	709	97.5	98.5	101.0
May	744	735	744	98.8	100.0	101.2
June	620	591	609	95.3	98.2	103.0
July	744	690	732	92.7	98.4	106.1
Aug.	744	661	744	88.8	100.0	112.6
Total	8,760	8,285	8,505	94.5	97.0	102.7

TABLE 4-19. MAJOR COMPONENTS OF THE PLANT FOR TAKAOKA KYODO POWER CO., LTD.

No.	Item	Quantity	Description
1	Cooling tower	1	4.55 m dia. x 16.4 m ht. spray tower with carbon steel lining
2	Absorber	1	5.6 m dia. x 10.4 m ht. Moretana plate tower with 3 plates of AISI 304L S.S.
3	Mist eliminator	1	Horizontal flow type carbon steel casings with lining and polypropyrene elements
4	Flue gas fan	1	Turbo-fan 376,000 Nm^3/hr, 600 mmH_2O; 1,100 kW Casing: carbon steel with rubber lining Runner: AISI 316L S.S.
5	Air blower	1	Turbo-blower, 5,280 Nm^3/hr 2,000 mmH_2O, 75 kW, carbon steel
6	Absorbent pump	2*	Centrifugal type, 1,970 m^3/hr 20 m head, 200 kW Casing: cast iron with rubber lining Impeller: AISI 316L S.S.
7	Oxidizer	1	7.3 m dia. x 4.5 m ht. carbon steel with lining V-flow type, 4 units of air blowers
8	Centrifuge	4*	Vertical type, fully automatic, 37 kW each
9	Soot filter	1	Super-decanter, 15 kW
10	Gypsum thickener	1	6.2 m dia. x 3 m ht. carbon steel with lining
11	Clarifier	1	15.5 m dia. x 3 m ht. reinforced concrete with lining
12	Dust thickener	1	5.3 m dia. x 3 m ht. carbon steel with lining

*Includes one spare unit.

drop of the gas, caused plugging of spray nozzles, and prevented long-term stable continuous operation. SO_2 removal efficiency fluctuated between 88 and 94%. To cope with the problems, a strainer was installed in a slurry circulation line and gypsum seed was added to the slurry. During a month's shut-down of the boiler for annual maintenance in June 1977, the following modifications were made:

1) Changing the design of the tray.
2) Adding one tray.
3) Increasing the L/G ratio from 8 to 10.
4) Improving the washing effect of the scrubber walls.

Operation was resumed in July 1977 and has been carried out continuously with 95% SO_2 removal efficiency without the tendency of increased pressure drop. The particulates content of the treated gas is well below 50 mg/Nm^3, the guaranteed figure.

A gas velocity in the scrubber of 3-4 m/sec has been used. When the boiler load goes down, a portion of the treated gas is recycled to the scrubber system to maintain the gas velocity in the scrubber.

The mist eliminator has been washed with circulated liquor diluted with water. In order to prevent accumulation of impurities in the scrubber liquor, 1.8 tons/hr of liquor discharged from the cooler has been purged after being treated.

4.4.4 Evaluation

The Sumitomo-Fujikasui process has been successfully applied for flue gas from iron ore sintering machines with a

low SO_2 concentration. The Takaoka plant is the first application for a utility boiler with a relatively high SO_2 concentration. Although the plant experienced scaling, it seems that the problem has been solved and the process has proved applicable to utility boilers.

The Moretana scrubber features a high removal efficiency with a moderate pressure drop. Because of the good gas-liquid contact, it may be particularly suited for absorption of NO_x, which has a much smaller absorption rate than does SO_2.

4.5 OPERATION OF OTHER MAJOR LIMESTONE-GYPSUM PROCESS PLANTS FOR OIL-FIRED UTILITY BOILERS

4.5.1 Tamashima Plant, Chugoku Electric

The Tamashima plant was constructed by Hitachi Ltd. using Babcock and Wilcox's scrubber and an oxidation system to by-produce gypsum to treat flue gas from a 500 MW oil-fired boiler (Figure 4-13).[16] Operation parameters are shown in Table 4-4.

The boiler is for base load and undergoes little load fluctuation; it is reduced to 450 MW at night. Four scrubbers were installed, one of which is for stand-by. Operation of the plant started in July 1975. In the early period of operation, spray nozzle plugging was encountered, which was solved by improving the strainer of the circulation pump.

The operation hours in a recent year are shown in Table 4-20. The major problem has been the scaling at the afterburner, which may be caused by the calcium sulfate in the mist. The plant has a pipe-and-fin type mist eliminator which

TABLE 4-20. OPERATION HOURS OF TAMASHIMA NO. 3 PLANT

	Hours			Availability (%)		Oper-ability (C/B) (%)	Remarks
	Total (A)	Boiler oper-ation (B)	FGD oper-ation (C)	Boiler (B/A)	FGD (C/A)		
Oct. 1976	744	744	744	100	100	100	
No.	720	720	675	100	93.8	93.8	After-burner scaling
Dec.	744	234	234	31.5	31.5	100	
Jan. 1977	744	9	0	1.2	0	0	Annual maintenance of boiler (Dec. 11 through Feb. 1)
Feb.	672	669	661	99.6	98.4	98.8	
Mar.	744	744	717	100	96.4	96.4	Repair of impeller
Apr.	720	720	644	100	89.4	89.4	After-burner scaling
May	744	744	744	100	100	100	
June	720	624	596	86.7	82.8	95.5	After-burner scaling
July	744	744	744	100	100	100	
Aug.	744	645	645	86.7	86.7	100	Shutdown of boiler
Sept.	720	720	720	100	100	100	
TOTAL =	8,760	7,317	7,124	83.5	81.3	97.4	

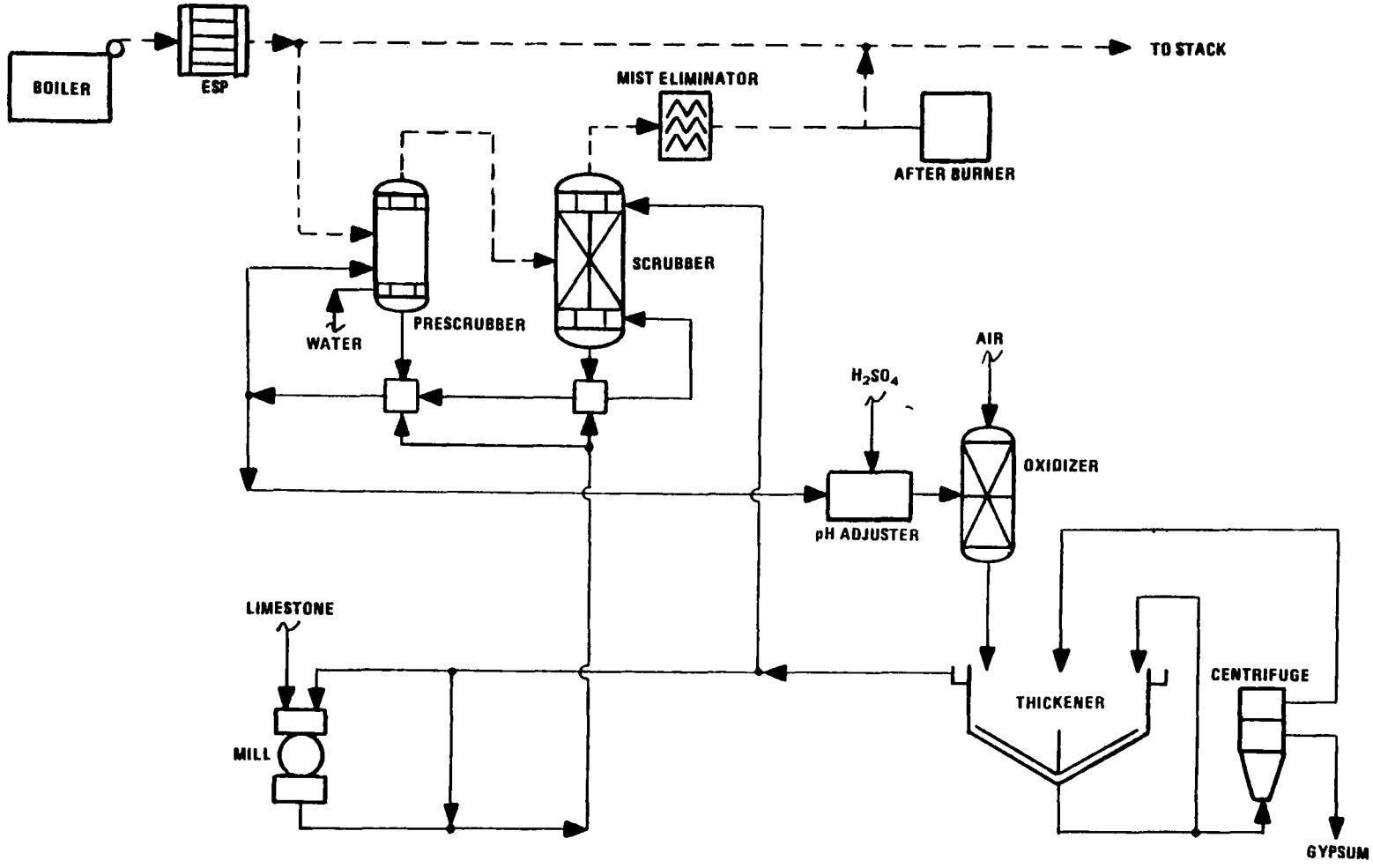

Figure 4-13. Flow sheet of Tamashima plant, Chugoku Electric.

gives a small pressure drop. Presumably, the mist eliminator is not highly efficient. Operability of the plant has reached 97%.

The plant uses limestone ground so that 95% passes a 325 mesh screen, and by-produces 93,000 tons/year of gypsum containing about 10% moisture. The gypsum has been sold for wallboard and cement. The plant removes about 96% of SO_2 (about 1,500 ppm). The pressure drop is fairly heavy and the plant requires 3.5% of the power generated by the boiler.

4.5.2 Karatsu Plant, Kyushu Electric

The Karatsu plant, Kyushu Electric, with a capacity of treating half of 720,000 Nm^3/hr flue gas from a 500 MW oil-fired boiler using the MHI limestone-gypsum process has been in smooth operation as shown in Table 4-21. The operability is 100% except during the use of a low-sulfur oil at the start-up of the boiler.

The operation parameters are shown in Table 4-4. The plant, as well as other plants by the MHI process, is characterized by a slight pressure drop of gas and a low consumption of power.

4.6 OPERATION OF THE CHIYODA JET BUBBLING PROCESS[17,18]

4.6.1 Outline

Chiyoda Chemical Engineering and Construction Co. has developed a new limestone scrubbing process using a jet bubbling reactor and has operated a pilot plant with a capacity of treating 1,000 Nm^3/hr of flue gas from an oil-fired boiler. The

TABLE 4-21. OPERATION HOURS OF KARATSU PLANT

	Hours			Availability (%)		Oper-ability (C/B) (%)	Remarks
	Total (A)	Boiler oper-ation (B)	FGD oper-ation (C)	Boiler (B/A)	FGD (C/A)		
Sept. 1976	720	720	720	100	100	100	
Oct.	744	744	744	100	100	100	
Nov.	720	720	720	100	100	100	
Dec.	744	744	743	100	99.9	99.9	
Jan. 1977	744	744	739	100	99.3	99.3	
Feb.	672	191	187	28.4	27.8	97.9	Annual maintenance of boiler
Mar.	744	159	150	21.4	20.2	94.3	
Apr.	720	720	720	100	100	100	
May	744	744	744	100	100	100	
June	720	297	291	41.3	40.4	98.0	Boiler shutdown
July	744	744	744	100	100	100	
Aug.	744	744	744	100	100	100	
TOTAL =	8,760	7,271	7,246	83.0	83.5	99.7	

process is simple and uses a reactor to which flue gas, limestone, and air for oxidation are introduced. Gypsum slurry is discharged from the reactor. Since the slurry is circulated in the reactor by agitation, no circulation pump is needed. Construction is now under way on a 20 MW demonstration plant at Gulf Power Company's Scholz plant. The unit is expected to be operational in June 1978.

4.6.2 Jet Bubbling Reactor

A jet reactor is shown in Figure 4-14. The reactor consists of two zones, a jet bubbling zone for SO_2 absorption and a reaction zone for gypsum formation. Flue gas is dispersed from many spargers with open ends 100 - 400 mm below the liquid surface as shown in Figure 4-15. The diameter of the bubbles ranges from 3 to 20 mm. The bubble penetration length is related to the gas sparging velocity and the submergence depth as shown in Figure 4-16. The contact time of a gas bubble with liquid ranges from 0.5 to 1.5 seconds.

The large gas-liquid contact area and the turbulent motion of the liquid provide efficient SO_2 removal as shown in Figures 4-17 and 4-18. A computer program was developed to relate measured operating variables with SO_2 removal efficiency. Good agreement with the measured SO_2 removal efficiency was obtained by equations (1), (2), and (3) below. The correlation is shown by the solid lines in Figures 4-17 and 4-18.

$$\eta_{SO_2} = (1 + N_1)^{-1} \, [1 - \exp(N_2)] \tag{1}$$

where

$$N_1 = 28.5 \, U \, (\Delta P/400)^{-1} \, (10^{-pH}) \times (\chi_{SO_2}/1{,}000)^{0.73} \, (\chi_{O_2}/3)^{-0.42} \tag{2}$$

$$N_2 = 3.77 \, (U)^{-0.22} \, (\Delta P/400)^{1.25} \tag{3}$$

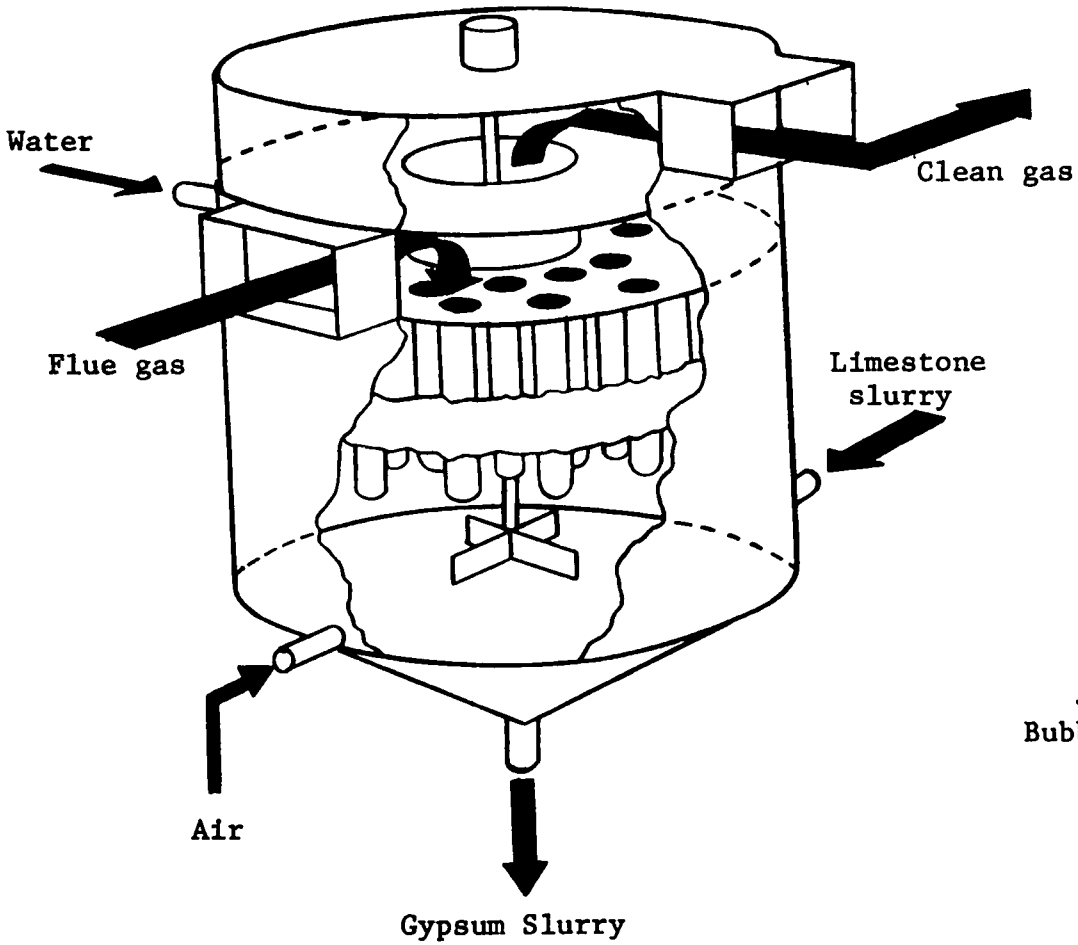

Figure 4-14. Jet bubbling reactor.

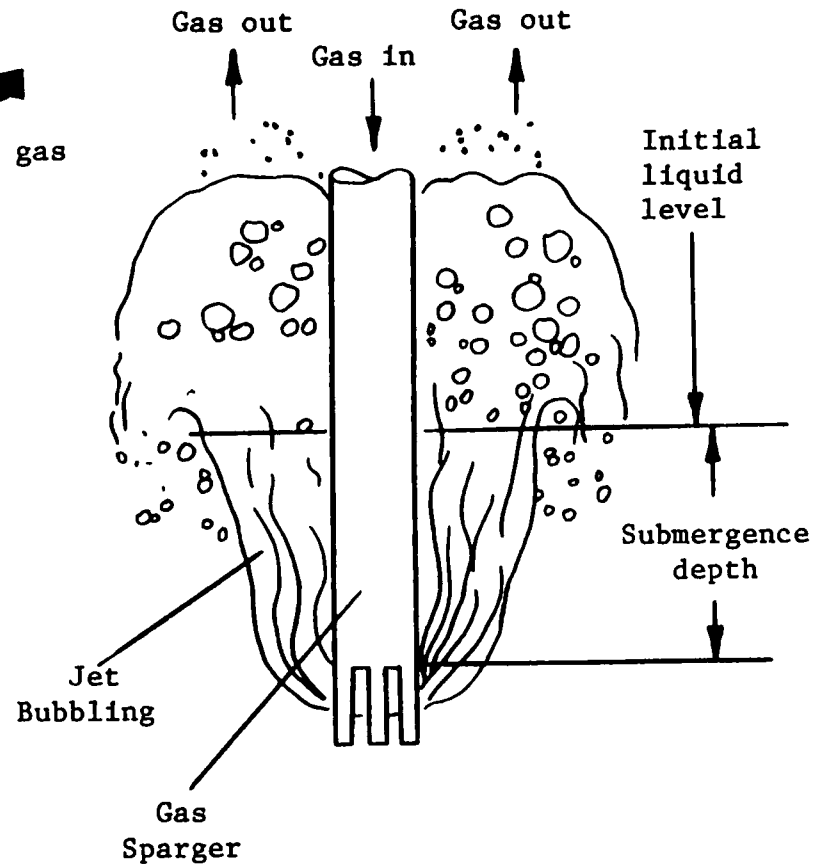

Figure 4-15. Schematic drawing of gas sparger.

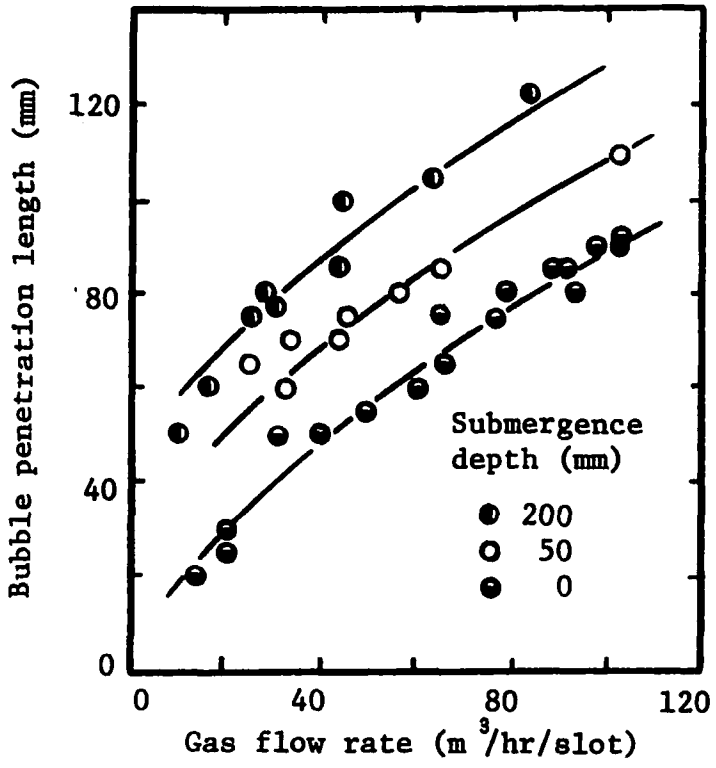

Figure 4-16. Effect of gas flow rate on penetration length.

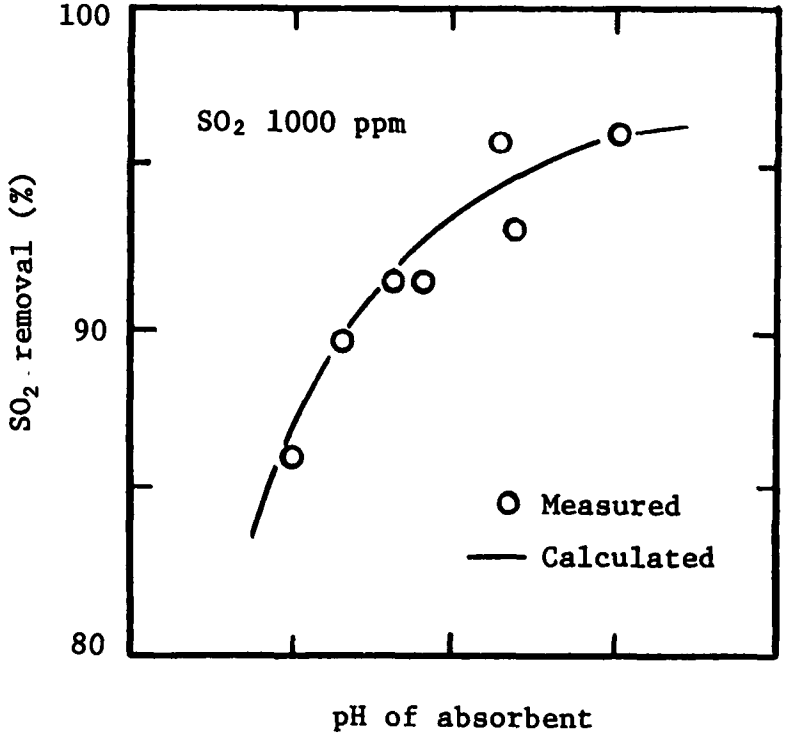

Figure 4-17. SO_2 removal *vs.* pH of absorbent.

U = Superficial gas velocity, Nm^3/m^2-sec
X = Concentration in gas, ppm by volume

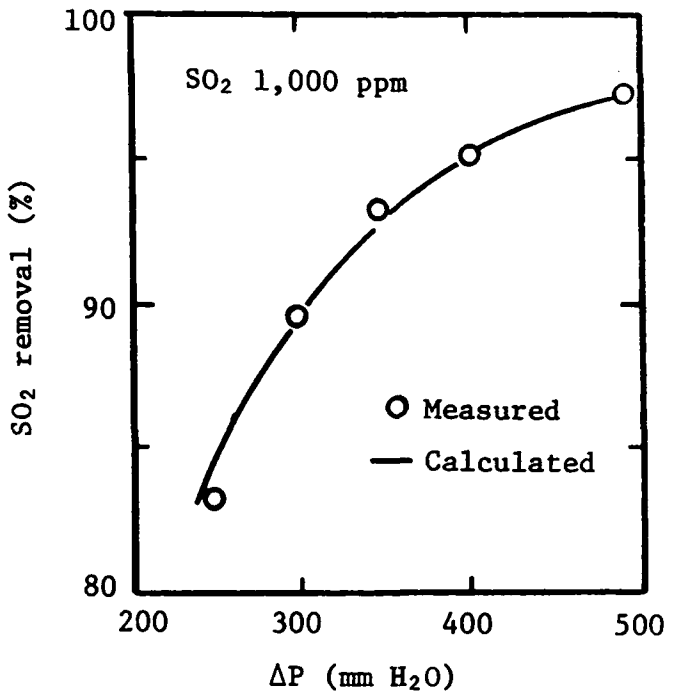

Figure 4-18. Pressure drop and SO_2 removal efficiency.

The reaction zone is at the lower part of the reactor, where air bubbles are introduced to oxidize calcium sulfite to gypsum. The slurry in the reaction zone is moderately stirred by both air bubbling and mechanical agitation (Figure 4-19). The slurry retention time ranges from 1 to 4 hours to ensure over 99% limestone utilization (Figures 4-20 and 4-21). The long reaction time allows gypsum crystals to grow to a desired size.

Scaling problems can be eliminated by keeping the gypsum concentration in the slurry at 10-20% and securing a sufficient liquid volume; newly formed gypsum will deposit on the

surface of gypsum crystals in the slurry and not on reactor walls and internals.

A series of experiments in fluid mechanics and dynamics was conducted with a water-air system using Lucite vessels, which were 500, 800, 1,000 and 3,000 mm in diameter and 3,000 mm in height, and in which air was made to flow at 1,000 - 20,000 m^3/hr.

Chiyoda claims that a large reactor using one agitator can be designed with a capacity of treating flue gas from a 250 MW boiler.

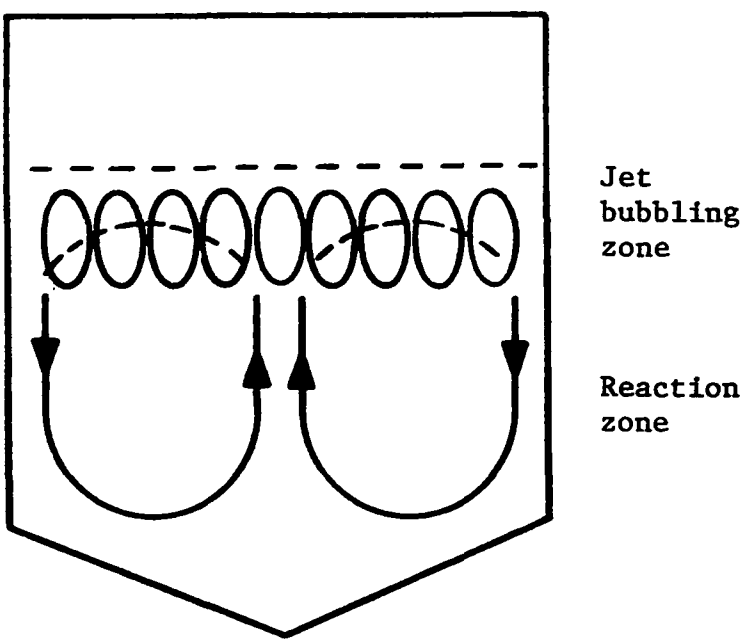

Figure 4-19. Liquid flow pattern in jet bubbling reactor.

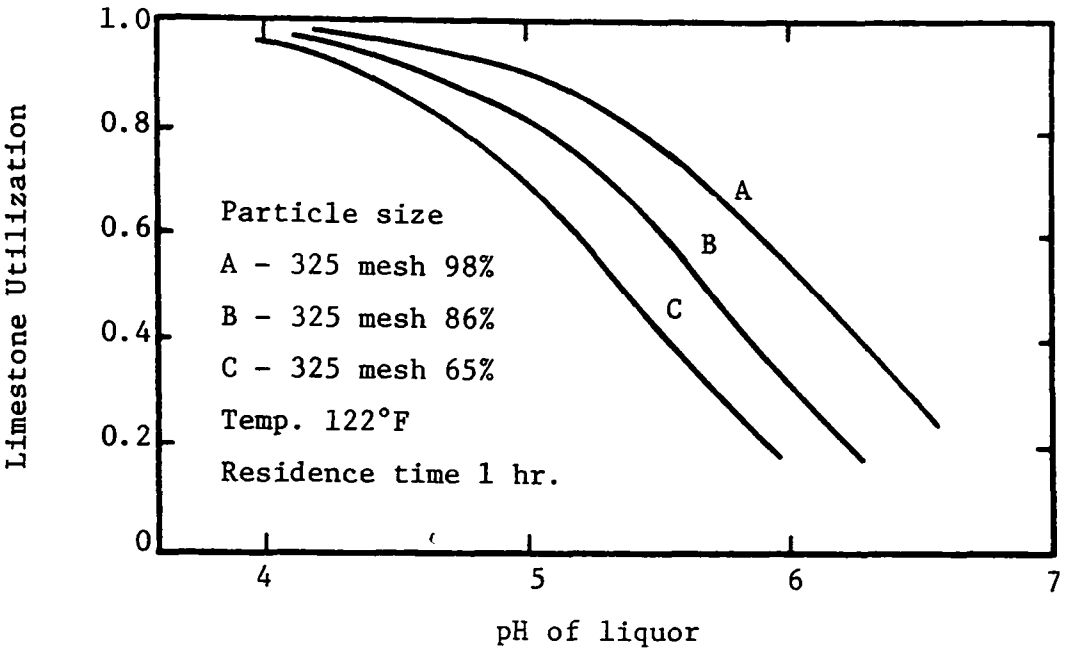

Figure 4-20. Effect of pH on limestone utilization.

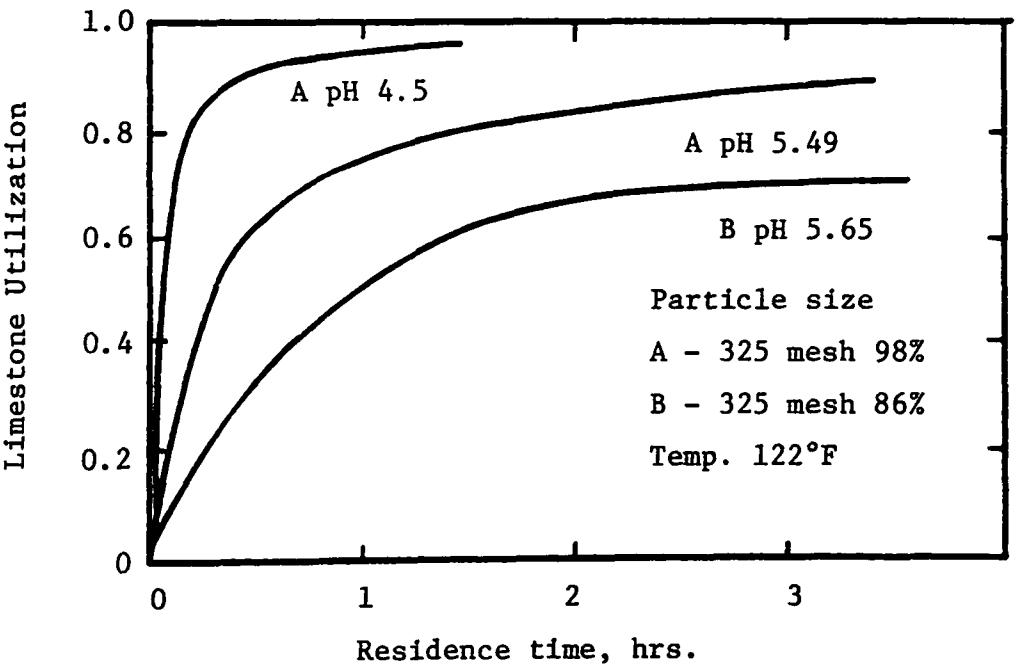

Figure 4-21. Effect of residence time on limestone utilization.

4.6.3 Process Flow Diagram

A flowsheet of the pilot plant is shown in Figure 4-22. Major components are listed in Table 4-22. Flue gas is first treated in a prescrubber to remove particulates in order to obtain high-purity gypsum. A purge would be required to remove particulates and chlorides from the prescrubber loop. The gypsum slurry discharged from the reactor is centrifuged and the mother liquor is returned to the reactor. The pilot plant has a line to circulate a portion of the gypsum slurry to the scrubber, but tests have shown that this line is unneeded. Typical operation data and gypsum quality are shown in Tables 4-23 and 4-24. A schematic flow diagram of a plant to by-produce throw-away gypsum is shown in Figure 4-23. The process is simple, without a prescrubber or a slurry circulation line. Gypsum slurry discharged from the reactor is sent to a waste disposal pond and the supernatant is circulated to the scrubbing system. In application to a coal-fired system, a small portion of the filtrate from the gypsum centrifuge or of the supernatant liquor from the pond may have to be purged to limit the chloride concentration in the system. The gypsum may be suitable for landfill disposal.

4.6.4 Economics

Table 4-25 compares the cost of the jet bubbling process with two conventional lime scrubbing processes--sulfite sludge by-production and forced oxidation to by-produce gypsum. Capital cost for the jet bubbling process is estimated at $31.2/kW, which is less than half that for other processes. The annualized cost is also considerably lower. This includes fuel oil for reheating the gas to 140°C (280°F), which accounts for more than 50% of the operation cost. Annualized cost for a

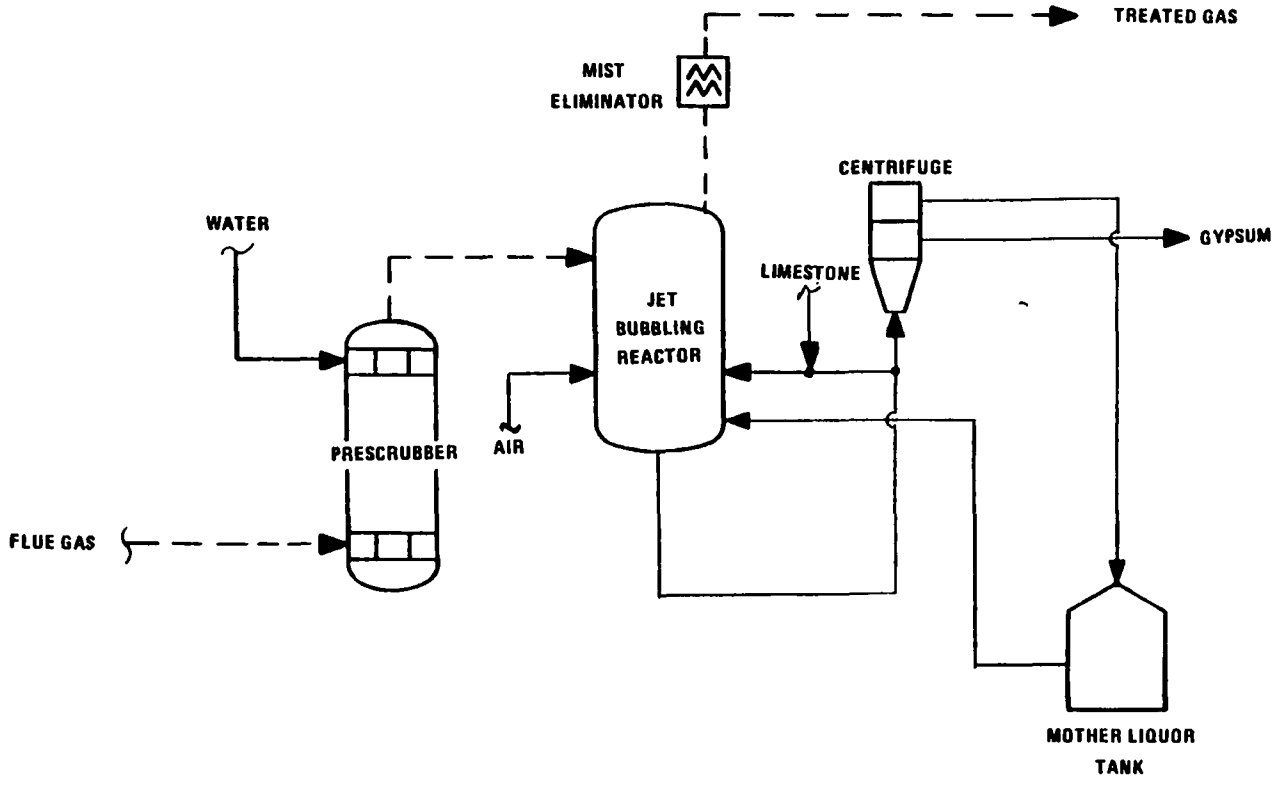

Figure 4-22. Pilot plant process flow diagram.

TABLE 4-22. MAJOR EQUIPMENT OF PILOT PLANT

Equipment	Type	Size	Material
Precooler	Spray column	0.7 m dia. x 3.2 m ht.	316L S.S.
Jet bubbling reactor		0.5 m dia. x 4.0 m ht.	316L S.S.
Mother liquor tank		1.5 m dia. x 2.6 m ht.	FRP
Flue gas blower	Turbo	1,000 Nm^3/hr at 700 mm H_2O	C.S.
Cooling water circulation pump	Centrifugal	1 m^3/hr at 20 m H_2O	Rubber lining
Gypsum slurry pump	Centrifugal	5 m^3/hr at 20 m H_2O	Rubber lining
Mother liquor pump	Centrifugal	3 m^3/hr at 20 m H_2O	Rubber lining
Centrifuge	Screw decanter		Stellite + 316L S.S.

TABLE 4-23. TYPICAL PILOT PLANT OPERATING DATA

Conditions		Typical Values for low-sulfur gas	high-sulfur gas
Flue gas flowrate to precooler	scfm on wet basis	585	585
Flue gas temperature	°F	135-140	135-140
Flue gas composition			
SO_2	ppm on wet basis	1,000-1,100	2,900-3,000
O_2	% on wet basis	2.9-3.2	2.9-3.2
CO_2	% on wet basis	11.0-11.5	11.0-11.5
H_2O	% on wet basis	16.5-19.0	16.5-19.0
SO_2 loading at JBR outlet	ppm on wet basis	77-85	360-380
SO_2 removal	%	92	87
Temperature of JBR liquid	°F	135-140	135-140
Oxidation air	scfm	12.4	31.0
Pressure drop in JBR	in. H_2O	13.8-15.8	13.8-15.8
Limestone utilization	%	99.3	99.1

TABLE 4-24. GYPSUM QUALITY

Particle size:	
Average Stokes' diameter	60 microns
Chemical composition (wt %, dry basis):	
as $CaSO_4 \cdot 2H_2O$	98.02
$CaSO_3$ (sulfite)	undetectable
$CaCO_3$	0.41
pH	6.8
Free water (wt %, wet basis)	13.5
Mortar strength (psi):	
Tensile	135
Compression	640
Bending	384

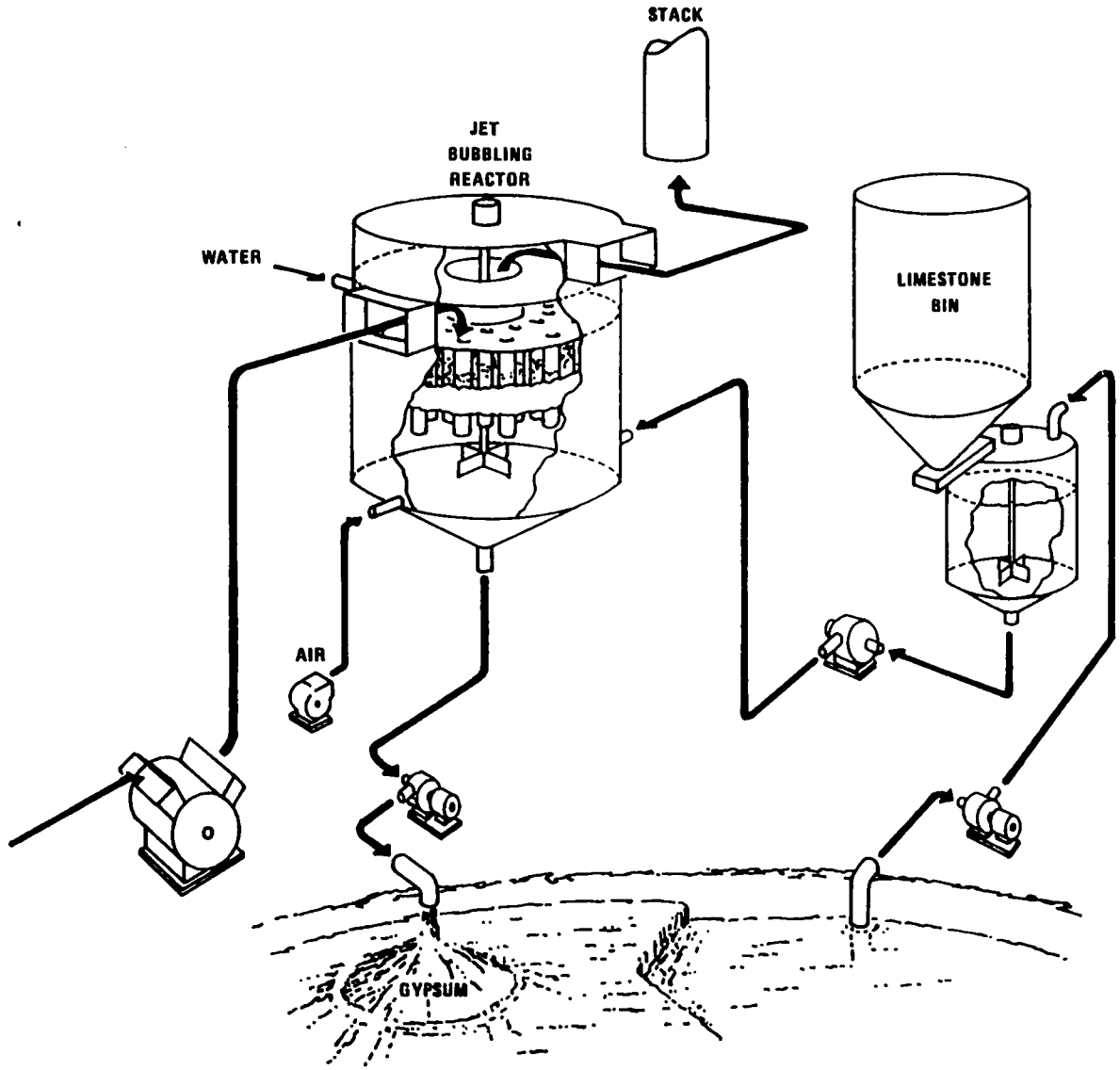

Figure 4-23. Process flow diagram of prototype plant.

TABLE 4-25. COSTS FOR 60 MW UNIT

Design bases: 70% load factor; 3% sulfur in coal; 90% SO_2 removal efficiency; 280°F reheat temperature

		Unit	Jet Bubbling FGD	Limestone Scrubbing	Limestone scrubbing followed by oxidation
Capital cost		$	1,870,000	3,800,000	4,500,000
Annual operating cost					
Electricity	$0.01/kWh	$/year	85,148	89,090	110,377
Process water	$0.1/1,000 gal	"	4,417	4,859	4,417
Cooling water	$0.05/1,000 gal	"	2,103	1,000	2,103
Limestone*	$10/ton	"	106,271	148,779	116,898
Fuel oil	$70/kl	"	417,222	417,222	417,222
Low pressure steam†	$5/ton	"	11,431	11,431	11,431
Labor	$15,000/man-year	"	120,000	120,000	120,000
Maintenance	3% of capital cost	"	56,100	114,000	135,000
Subtotal		"	802,692	906,381	917,448
Capital charge	17.5% of capital cost	"	327,250	665,000	787,500
Overhead	10% of direct cost	"	80,269	90,638	91,745
Total			1,210,211	1,662,019	1,796,693
Capital cost per kW		$/kW	31.2	63.3	75.0
Annualized cost		mills/kWh	3.29	4.52	4.88

*90% through 325 mesh as 100% pure

†for atomizing reheater fuel

200 MW plant without gas reheating is estimated at 1.87 mils/kWh (Table 4-26).

4.6.5 Evaluation

The process is based on a new concept and has a few advantages. It is simple and requires low investment and operation costs. Plant operation seems easy, being free from scaling problems. Although gas pressure drop in the reactor is not small, total power consumption seems low because slurry circulation pumps are not needed.

A possible disadvantage is that it may not be easy to attain a very high SO_2 removal efficiency, say above 95%, with a gas rich in SO_2. Gulf Power's Scholtz plant will give further information.

TABLE 4-26. CAPITAL AND OPERATION COSTS FOR 200 MW UNIT

Design bases: 70% load factor; 3% sulfur in coal; 90% SO_2 removal efficiency.

Item		Unit	Jet Bubbling FGD
Capital cost		$	6,200,000
Annual operating cost:			
Electricity	$0.02/kWh	$/year	418,200
Process water	$0.1/1,000 gal	"	8,700
Cooling water	$0.05/1,000 gal.	"	7,000
Limestone	$10/ton	"	360,000
Labor	$7.85/man-hour	"	120,000
Maintenance	3% of capital cost	"	186,000
Subtotal			1,099,900
Capital charge	17.5% of capital cost	"	1,085,000
Overhead	10% of direct cost	"	109,990
Total		"	2,294,890
Capital cost per kW		$/kW	31.00
Annualized cost		mills/kWh	1.87

SECTION 5

INDIRECT AND MODIFIED LIME/LIMESTONE PROCESSES

5.1 GENERAL DESCRIPTION

5.1.1 Outline

Indirect lime/limestone processes have been developed to ensure scale-free stable operation. Included in this category are the so-called double-alkali processes, which use alkaline solutions for absorption and lime or limestone for precipitation, and other similar processes which use acidic solutions for absorption. Major installations are shown in Table 5-1 and operation parameters in Table 5-2.

The scrubbing liquors consist of sodium sulfite for Kureha-Kawasaki, Showa Denko, and Tsukishima; ammonium sulfite for Nippon Kokan; dilute sulfuric acid containing ferric sulfate for Chiyoda; aluminum sulfate for Dowa; acidic ammonium sulfate for Kurabo; and sodium acetate for Kureha.

The pH of the liquors is 6 to 7 for ammonium and sodium sulfites; 5 for sodium acetate; 3 to 4 for ammonium and aluminum sulfates; and 1 for sulfuric acid. The L/G ratio is 1-2 (7-14 gal/1,000 scf) for the solutions of pH 6-7; 3-10 for the solutions of pH 3-5; 30-50 for the acid at pH 1. The more acidic the solution is, the smaller the SO_2 absorption capacity and the easier the reaction with limestone. The problem of scaling may also be less at lower pH, as it is for limestone

TABLE 5-1. INDIRECT AND MODIFIED LIME/LIMESTONE PROCESS INSTALLATIONS

Process developer	Absorbent, precipitant	User	Plant site	Capacity (1,000 Nm^3/hr)	Source of gas	Inlet SO_2 (ppm)	Year of completion
Chiyoda	H_2SO_4, $CaCO_3$	Nippon Mining	Mizushima	34	Claus furnace	9,300	1972
"	"	Fuji Kosan	Kainan	160	Industrial boiler	770	1972
"	"	Mitsubishi Rayon	Otake	90	Industrial boiler	1,600	1972
"	"	Daicel	Aboshi	99	Industrial boiler	1,400	1973
"	"	Electrochem. Ind.	Chiba	75	Industrial boiler		1973
"	"	Tohoku Oil	Sendai	14	Claus furnace	7,100	1973
"	"	Mitsubishi Chem.	Yokkaichi	420	Industrial boiler	1,200	1974
"	"	Amagasaki Coke	Kakogawa	36	Incinerator	11,300	1974
"	"	Hokuriku Electric	Toyama	750	Utility boiler	600	1974
"	"	Mitsubishi Pet.	Yokkaichi	150	Industrial boiler	1,300	1974
"	"	Mitsubishi Pet.	Yokkaichi	750	Industrial boiler	1,200	1974
"	"	Gulf Power	Florida	85	Utility boiler	1,700	1975
"	"	Denki Kagaku	Chiba	122	Industrial boiler	1,400	1975
"	"	Hokuriku Electric	Fukui	1,050	Utility boiler	1,500	1975
"	"	Toyama Power	Toyama	750	Utility boiler	1,500	1975
Showa Denko	Na_2SO_3, $CaCO_3$	Showa Denko	Chiba	500	Industrial boiler	1,500	1973
"	"	Kanegafuchi Chem.	Takasago	300	Industrial boiler	1,500	1974
"	"	Showa Pet. Chem.	Kawasaki	200	Industrial boiler	1,400	1974
Showa Denko-Ebara	"	Nippon Mining	Saganoseki	120	H_2SO_4 plant		1973
"	"	Yokohama Rubber	Hiratsuka	105	Industrial boiler		1974
"	"	Nisshin Oil	Isogo	100	Industrial boiler		1974
"	"	Poly Plastics	Fuji	212	Industrial boiler		1974
"	"	Ajinomoto	Yokkaichi	82	Industrial boiler		1974
"	"	Kyowa Pet. Chem.	Yokkaichi	150	Industrial boiler		1974
"	"	Japan Food	Yokkaichi	100	Industrial boiler		1975
"	"	Yokohama Rubber	Mie	100	Industrial boiler		1975
"	"	Asia Oil	Yokohama	243	Industrial boiler		1975

(Continued)

TABLE 5-1. (Continued)

Process developer	Absorbent, precipitant	User	Plant site	Capacity (1,000 Nm^3/hr)	Source of gas	Inlet SO_2 (ppm)	Year of completion
Kureha-Kawasaki	Na_2SO_3, $CaCO_3$	Tohoku Electric	Shinsendai	420	Utility boiler	420	1974
"		Shikoku Electric	Sakaide	1,260	Utility boiler	1,500	1975
"	'	Shikoku Electric	Anan	1,260	Utility boiler	1,500	1975
"	'	Kyushu Electric	Buzen	730	Utility boiler	1,500	1977
"	'	Tohoku Electric	Akita	1,050	Utility boiler	1,500	1977
Nippon Kokan	$(NH_4)_2SO_3$, CaO	Nippon Kokan	Keihin	150	Sintering plant	400	1972
Tsukishima	Na_2SO_3, CaO	Kinuura Utility	Nagoya	185	Industrial boiler		1974
"	'	Daishowa Paper	Fuji	264	Industrial boiler		1975
Kurabo Eng.	$(NH_4)_2SO_4$, CaO	Kuraray	Tamashima	100	Industrial boiler	1,500	1974
"	'	Daicel	Aboshi	163	Industrial boiler	1,300	1975
"	'	Bridgestone Tire	Tosu	60	Industrial boiler		1975
"	'	Bridgestone Tire	Tochigi	80	Industrial boiler		1975
"		Jujo Paper	Ishinomaki	200	Industrial boiler	1,200	1976
Dowa Mining	$Al_2(SO_4)_3$, $CaCO_3$	Taenaka Mining	Mobara	3.5	Kiln	7,500	1972
'	'	Dowa Mining	Okayama	150 x 2	H_2SO_4 plant	650	1974
'	"	Naikai Engyo	Okayama	70	Industrial boiler	1,500	1976
'	'	Yahagi Iron	Nagoya	50	Sintering plant	2,500	1976
"	"	Nihon Seiko	Nakase	30	Sintering plant	5,000	1976
"		Kowa Seiko	Tobata	72	H_2SO_4 plant	750	1978
"	"	Mitsubishi Metal		140	Smelting furnace	4,000	1978
Kureha Chemical	CH_3COONa	Kureha Chemical	Nishiki	5	Industrial boiler	1,500	1975
Kobe Steel	$CaCl_2$, CaO	Kobe Steel	Amagasaki	175 x 2	Sintering plant	500	1976
"	'	Kobe Steel	Kobe	350 x 2	Sintering plant	500	1976
"		Nakayama Steel	Osaka	375	Sintering plant	500	1976
"		Kobe Steel	Kakogawa	1,000	Sintering plant	500	1978
Kawasaki H.I.	MgO, $CaCO_3$	Unitika	Okazaki	200	Industrial boiler	1,600	1975
"	MgO, CaO	Nippon Exlan	Saidaiji	300	Industrial boiler	1,400	1975

TABLE 5-2. OPERATION DATA OF INDIRECT AND MODIFIED LIME/LIMESTONE PROCESS PLANT

Process developer	Kureha-Kawasaki	Showa Denko	Chiyoda	Dowa	Kurabo	Nippon Kokan	Kobe Steel	Kawasaki H.I.
Absorbent	NaOH	NaOH	H_2SO_4	$Al_2(SO_4)_3$	NH_3	NH_3	CaO-$CaCl_2$	$Mg(OH)_2$
Precipitant	$CaCO_3$	$CaCO_3$	$CaCO_3$	$CaCO_3$	CaO	CaO		CaO, $CaCO_3$
Plant Owner	Shikoku Electric	Showa Denko	Hokuriku Electric	Naikai Engyo		Nippon Kokan	Nakayama Steel	Unitika
Plant site	Sakaide	Chiba	Fukui	Okayama		Keihin	Funamachi	Okazaki
Fuel	Oil	Oil	Oil	Oil	Oil	Coke*	Coke*	Oil
FGD capacity (1,000 Nm^3/hr)	1,270	500	980	72	115	150	375	200
FGD capacity (MW)	450	150	350	(25)	(40)	(50)	(125)	68
Inlet SO_2 (ppm)	1,270	1,400	1,800	1,500	1,480	350	150-250	1,400
Inlet dust (mg/Nm^3)	20	100-200	30	200	150	80	300-400	200
Inlet gas temperature (°C)	135	140	140	170	170	120	140-155	170
Number of scrubbers in parallel	2	4	1	1	1	1	1	1
Prescrubber type	None	None	Venturi	Spray		Spray	Spray	None
L/G (liters/Nm^3)				2.5	1.4	1.0	3.5	
Scrubber type	Packed	VC†	Packed	Packed	Packed	Screen	Venturi	MV‡
Liquor pH	6.2	6.8	1	3.5	3.8	6.0	5-5.5	5-6
Concentration	20	25	1-2		10	30	30+6§	
L/G (liters/Nm^3)	1.2	0.5-1	40-60	10	8	2	3	6
Gas velocity (m/sec)	2			1.2	2	2	3	3
Outlet SO_2 (ppm)	70	50-90	80	100	130	10-20	15-25	Below 140
Outlet dust (mg/Nm^3)	10	Below 50		50	Below 50		40-50	Below 100
SO_2 removal efficiency (%)	95	93-96	96	93	91		90	Above 90
Mist eliminator type	Terellette		Euroform	Wire mesh	Euroform		Euroform	Louver
Pressure drop (mmH_2O) Prescrubber				10-20	130		15	
Pressure drop (mmH_2O) Scrubber	115	300-500		70-80	120		120	115
Pressure drop (mmH_2O) Mist eliminator	25	30-50		20-30			35	50
Pressure drop (mmH_2O) Total system	310	400-700	680	170	300	300	220	230
Wastewater purged (t/hr)	None	4-6	7-24	0.3	None	2	None	None
Energy requirements (Design)								
Pump (kW)			5,300	150	470		1,200	430
Fan (kW)			5,500	300	190		1,000	370
Total system (kW)	7,900	3,500	12,300	580	880		2,600	1,160
Per cent of power generated	1.8	2.3	3.5	2.3	2.2		2.1	1.7
Operability (%)	98.6	98.7	100	99.6	99.3	Above 95	98.1	99

*Iron-ore sintering plant †Vertical cone ‡Multi-venturi §30% $CaCl_2$ + 6% CaO

scrubbing processes. Limestone can be reacted with a sodium bisulfite solution, as in the Showa Denko and Kureha-Kawasaki processes, but the reaction occurs slowly, requiring large reaction vessels. Lime is used for the Tsukishima, NKK, and Kurabo processes.

In the Chiyoda, Dowa, Kureha, and Kurabo processes, the liquors which have absorbed SO_2 to form SO_3^{--} are contacted with air to oxidize the SO_3^{--} into SO_4^{--}. Limestone or lime is then added to precipitate gypsum. In the other processes, limestone or lime is added before oxidation to precipitate calcium sulfite. The calcium sulfite is then oxidized into gypsum. Gypsum usually grows in larger crystals in the double alkali type process than in the wet lime-limestone process. Moisture content of the by-product gypsum after centrifugation ranges from 6 to 12% as compared with 8-15% for the wet lime-limestone process.

The liquor from the gypsum centrifuge is mainly returned to the scrubber system. Softening of the liquor, which is frequently needed to prevent scaling, is not necessary when an acidic solution at a pH below 5 is used.

At most plants, a small portion of the liquor is purged to maintain the concentrations of chlorine, magnesium and other impurities under a certain level.

Sodium scrubbing ensures high SO_2 recovery but leads to sodium sulfate formation due to the oxidation of sodium sulfite. The sulfate has to be decomposed because it does not absorb SO_2.

Compared with sodium scrubbing, ammonia scrubbing is less expensive because ammonia is cheaper than sodium hydroxide

and ammonium sulfate is readily decomposed by lime. Plume formation, however, is a major problem with ammonia scrubbing.

Recently, two modified lime/limestone processes have been developed aiming at scale prevention. They are the Kobe Steel process which uses a 30% $CaCl_2$ solution dissolving lime as the absorbent, and the Kawasaki Magnesium Gypsum process which uses a magnesium hydroxide slurry containing lime or limestone as the absorbent. Plants using these processes are listed in Table 5-1 and their operation parameters are given in Table 5-2.

5.1.2 Operability and Economics

Figure 5-1 illustrates the relationship of scrubber liquor pH to operability, L/G ratio, and energy requirement (%). The data apply to FGD plants listed in Table 5-2 treating flue gas containing over 1,200 ppm SO_2 from oil-fired boilers to by-produce gypsum. The figure clearly shows that the lower the pH, the larger the L/G ratio and the higher the operability. The energy requirement, however, is also generally larger with a lower pH, because of the energy needed to circulate a larger amount of liquor.

The decrease in operability at a higher pH is apparently caused mainly by scaling. Circulation of a large amount of liquor in a scrubber helps prevent scaling. In addition, there may be some chemical reasons for the lower tendency of scaling at lower pH levels. The reason for this tendency, however, which has generally been experienced with limestone scrubbing systems, has not yet been clarified.

Figure 5-1 also shows data from two wet lime/limestone process plants (Owase-Mita plant, Chubu Electric; and Tamashima

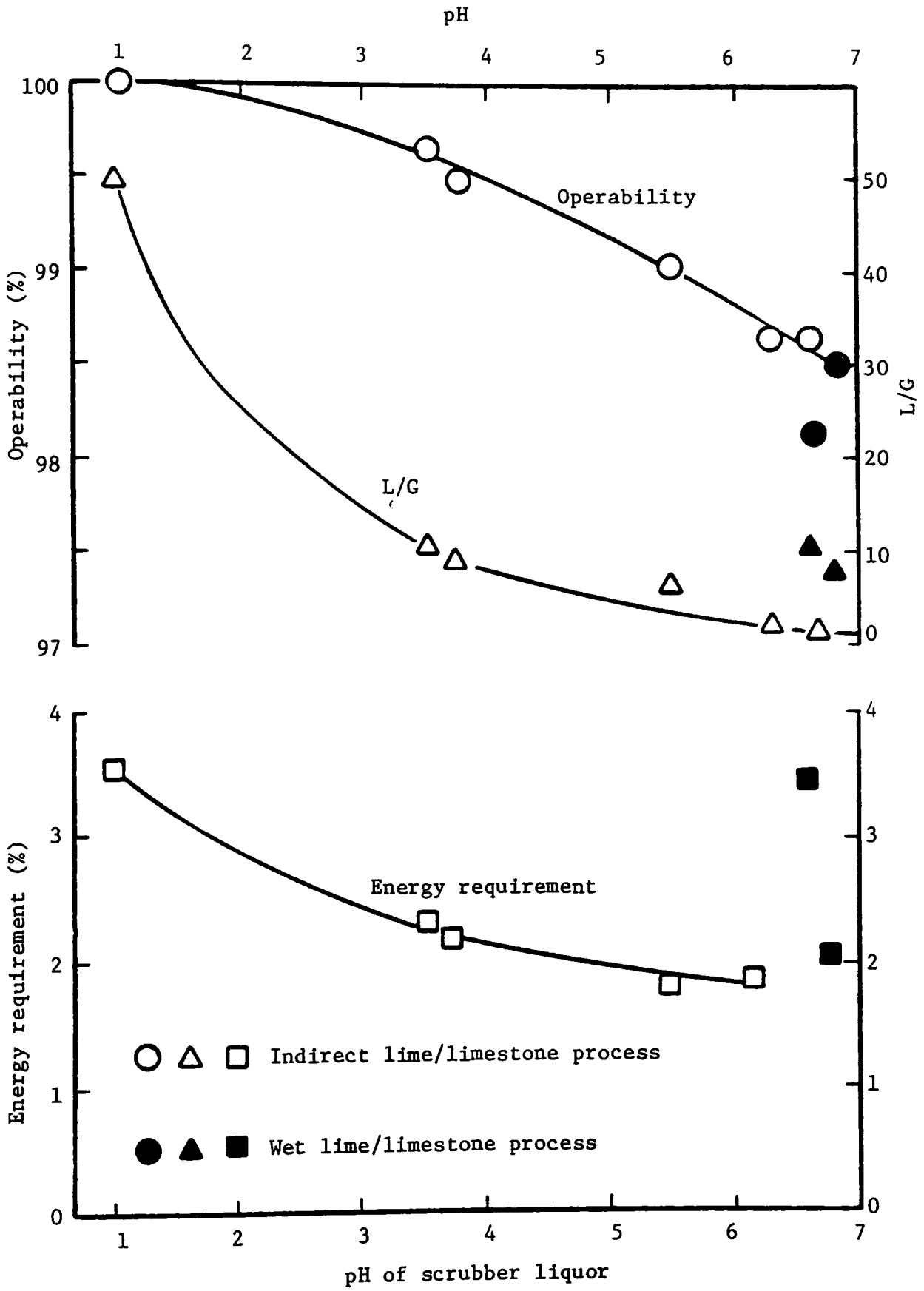

Figure 5-1. pH of scrubber liquor and performance.

plant, Chugoku Electric) which treat flue gas containing about 1,500 ppm SO_2 from oil-fired boilers. The pH of the slurry ranges from 6.5-7.0 and operability is a little over 98%. These figures are close to those for sodium-limestone double alkali processes. A distinct difference between the double alkali and wet lime/limestone processes is seen in the L/G ratio, which is about 1 for the former and 7-10 for the latter. A much larger L/G is needed for the lime/limestone process for two reasons: 1) SO_2 absorption rate is slow because it is controlled by the dissolving rate of lime or limestone, and 2) a large amount of slurry flow is needed to prevent scaling and plugging.

A sodium-limestone process plant (pH 6.2) costs about 20% more than a wet lime/limestone process plant but requires less energy due to the small L/G. Moreover, it is capable of removing 99% of SO_2 when required. A Chiyoda 101 process plant costs more than a wet lime/limestone process plant because of the requirement of a large scrubber. It also consumes more energy because of the large L/G ratio. The plant, however, is easy to operate and requires little labor as shown in Table 3-13.

The plant cost and operation cost of indirect lime/limestone processes using a liquor with an intermediate pH, the Dowa, Kurabo, and Kawasaki (magnesium gypsum) processes, seem much the same as those of wet lime/limestone processes. The processes using a low-pH liquor may suit plants whose operation is not easy to control precisely to prevent scaling when a wet lime/limestone process is used.

5.2 CHIYODA THOROUGHBRED 101 (CT 101) PROCESS

5.2.1 Characteristics

The CT 101 process is characterized by the use of dilute sulfuric acid containing a ferric sulfate catalyst as the absorbent. A flowsheet of the process is shown in Figure 5-2. Absorption and oxidation take place in a double-cylinder vessel, with the oxidizer inside and the absorber outside. A diagram of this vessel is shown in Figure 5-3. The absorbing liquor discharged from the scrubber is oxidized by air to convert the absorbed SO_2 to H_2SO_4. Most of the liquor is returned to the absorber and a portion is neutralized with limestone to precipitate gypsum. The gypsum slurry is centrifuged and the mother liquor is returned to the absorber. Gypsum is sold for wallboard and cement. Details of the process are available in published literature.[10, 16, 19]

Commercial plants using the process are listed in Table 5-1. Operation parameters of the Fukui plant, Hokuriku Electric, are shown in Table 5-2. Maximum and minimum SO_2 removal efficiencies obtained in test runs at a commercial plant for variations in H_2SO_4 concentration are shown in Figure 5-4. Since the SO_2 absorbing capacity of sulfuric acid is not high, a dilute acid (2-3% in concentration, normally about 2.5%) is used (Figure 5-4) at a large L/G ratio of 40-60 (Table 5-2). The large L/G results in the consumption of a fairly large amount of energy (Figure 5-1). On the other hand, plant operation is easy and requires little labor (Table 3-13).

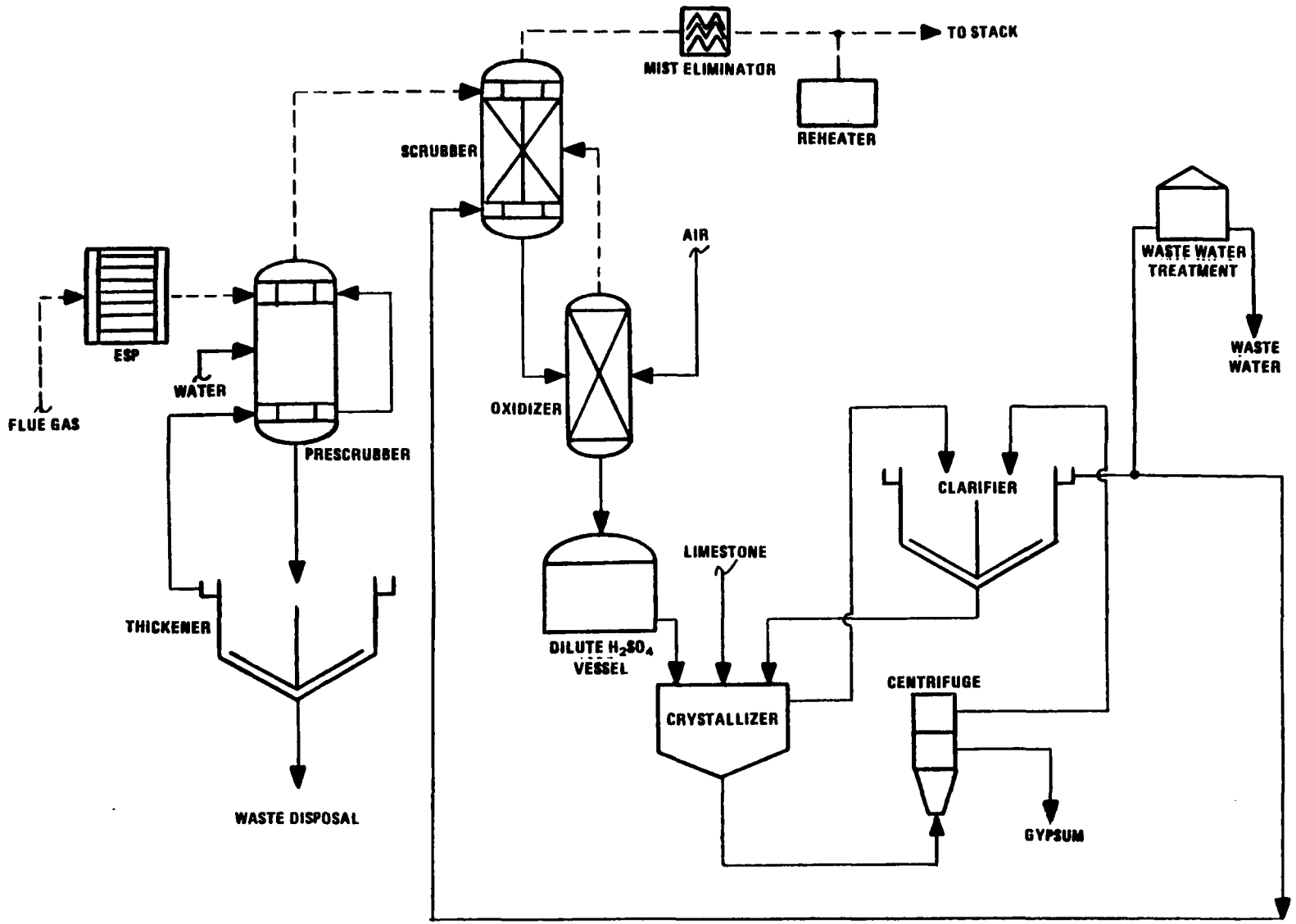

Figure 5-2. Flow sheet of CT 101 process.

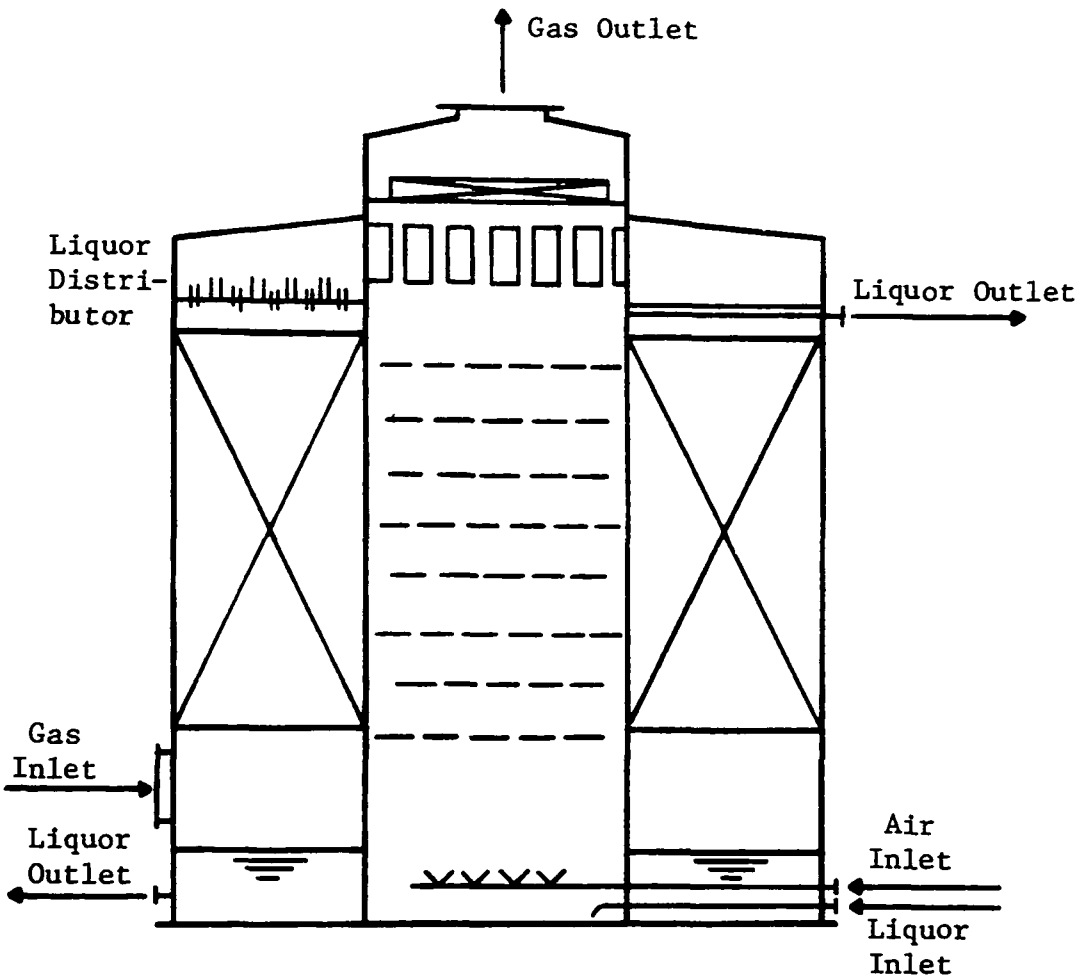

Figure 5-3. Double-cylinder type reactor.

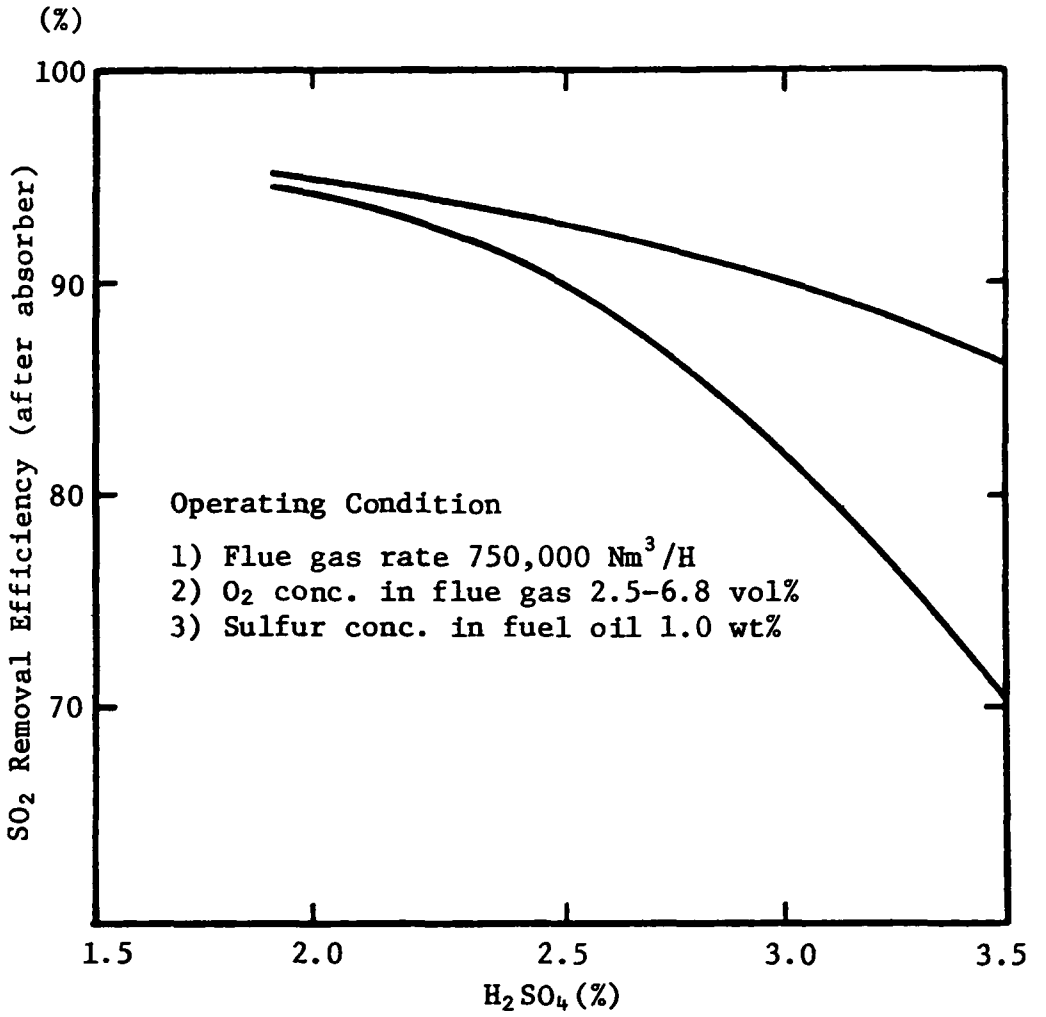

Figure 5-4. Maximum and minimum SO_2 removal efficiencies *vs* H_2SO_4 concentration as determined by test runs at a commercial plant.

5.2.2 Operation of Commercial Plants

The performance of 3 plants for utility boilers is shown in Table 5-3. The Toyama plant, Hokuriku Electric, which treats half of the flue gas from a 500 MW boiler burning 1%-sulfur oil, went into operation in October 1974. In January 1975 the plant experienced mist eliminator breakage due to unusual vibration. The operability has been 100% since April 1975. The Fukui plant, Hokuriku Electric, treats all the flue gas from a 350 MW oil-fired boiler burning 3%-sulfur oil. The plant, put into operation in June 1975, had problems with a stirrer

TABLE 5-3. UTILITY BOILER AND FGD PERFORMANCE (1975 - AUG. 1977)

Power company (Plant)	FGD capacity (MW)	Operation period	Total hours	Boiler operation hours	FGD operation hours	Boiler availa-bility (%)	FGD opera-bility (%)
Hokuriku Electric (Toyama)*	250	Apr. 75 - Mar. 76	8,760	6,281	6,281	71.7	100
		Apr. 76 - Mar. 77	8,760	6,670	6,670	76.1	100
		Apr. 77 - Aug. 77	3,672	2,594	2,594	70.6	100
Hokuriku Electric (Fukui)†	350	June 75 - Mar. 76	7,296	5,336	5,217	73.1	98
		Apr. 76 - Mar. 77	8,760	7,141	7,141	81.5	100
		Apr. 77 - Aug. 77	3,672	3,565	3,565	97.1	100
Toyama Coop. (Toyama)‡	250	Oct. 75 - Mar. 76	4,368	3,076	3,039	70.4	99
		Apr. 76 - Mar. 77	8,760	5,647	5,647	64.4	100
		Apr. 77 - Aug. 78	3,672	3,132	3,132	85.3	100

*Started Oct. 1974. Sulfur in oil: 1%

†Started June 1975. Sulfur in oil: 3%

‡Started Oct. 1975. Sulfur in oil: 3%

due to improper design and misoperation in June and July of the year. The operability has been 100% since August 1975. The Toyama plant, Toyama Cooperative, treats all of the flue gas from a 250 MW oil boiler burning 3%-sulfur oil. The plant went into operation in October 1975 and soon encountered abrasion of the sludge mixer, which required repairing in February 1976. The operability has been 100% since.

All three plants have had an operability of 100% since 1976, but this does not mean they have been trouble-free. Although several problems were encountered, these were solved without stopping plant operation. The operation hours and problems of the Fukui plant in a recent one-year period are shown in detail in Tables 5-4 and 5-5, respectively.

The boiler of the Fukui plant is for base load operated at 350 MW on weekdays and at a reduced load Sunday and holiday nights (Figure 5-5). As shown in Figure 5-6, a by-pass damper is kept open so that a small portion of the gas treated by FGD is circulated to the scrubber.

5.2.3 Economics

Typical economic data of two plants for 250 and 350 MW boilers burning 3%-sulfur fuel are shown in Table 5-6. A conversion rate of $1 = ¥300 was used for the calculation. The table indicates annualized operation costs of 3.2 and 3.0 mills/kWhr for the two plants, assuming 8,000 hours annual operation, gas reheating to 290°F (143°C), and fixed costs equivalent to 17.5% of capital. For most utility boilers in the U.S., the annual operation hours may be fewer and the gas reheating temperature is much lower. For 7,000 hours annual operation with

TABLE 5-4. OPERATION HOURS OF FUKUI PLANT, HOKURIKU ELECTRIC

	Hours			Availability (%)		Opera-bility (C/B) (%)
	Total (A)	Boiler operation (B)	FGD operation (C)	Boiler (B/A)	FGD (C/A)	
Oct. 1976	744	197*	197*	26.5*	26.5*	100
Nov.	720	535	535	74.3	74.3	100
Dec.	744	694	694	93.2	93.2	100
Jan. 1977	744	703	703	94.5	94.5	100
Feb.	672	672	672	100	100	100
Mar.	744	685	685	92.0	92.0	100
Apr.	720	720	720	100	100	100
May	744	668	668	89.7	89.7	100
June	720	720	720	100	100	100
July	744	717	717	96.3	96.3	100
Aug.	744	744	744	100	100	100
Sept.	720	385*	385*	53.4*	53.4*	100
TOTAL	8,760	7,440	7,440	84.9	84.9	100

*The short operation hours are due to annual shutdown of the plant.

TABLE 5-5. TROUBLES AT THE FUKUI PLANT AND REMEDIES

No.	Date	Trouble	Remedy
1	Oct. 22, 1976	One of two motors of air blower of oxidizer burned out.	Operated with one motor and 90% SO_2 removal was maintained.
2	Feb. 19. 1977	Leakage of liquor from prescrubber due to ruined packing. For an hour while packing was replaced, flue gas was sent directly to main scrubber bypassing the prescrubber.	During the one-hour repair work, fuel oil with less sulfur was burned and 55% of flue gas was treated by FGD system avoiding overheating of scrubber and meeting emission standard.
3	Mar. 8, 1977	A pump had trouble with rubber lining.	A spare pump was used.
4	July 24, 1977	Gypsum lump formed on upper inside wall of crystallizer fell off and bent stirrer.	Remaining three crystallizers were used for 3 months while stirrer was under repair.
5	Three times	Minor problems with reheater firing.	FGD plant operation was not affected.

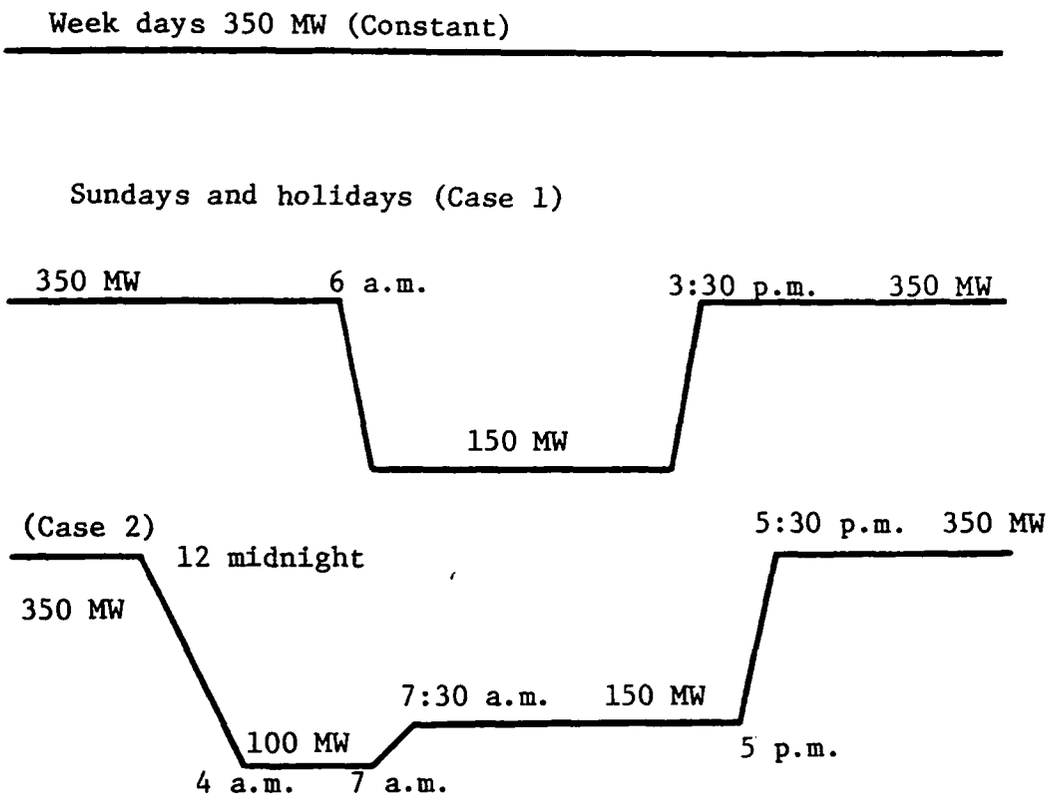

Figure 5-5. Operation load of Fukui plant.

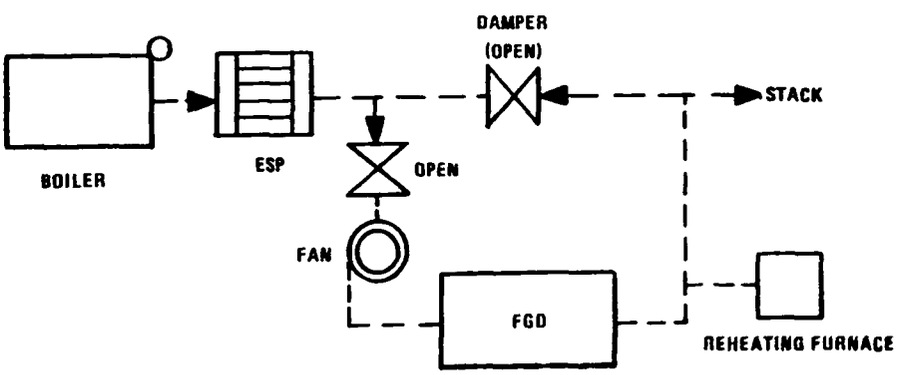

Figure 5-6. Bypass system of Fukui plant.

TABLE 5-6. TYPICAL ECONOMIC DATA OF COMMERCIAL PLANTS ($1 = ¥300, 1976)

Item		Unit	Case I	Case II	Remarks
1) Gas Source & Capacity			Boiler (3% sulfur), 250 MW equivalent	Boiler (3% sulfur), 350 MW equivalent	
2) Inlet Gas					
Capacity		scfm	466,000	650,000	
SO_2 Content		ppm	1,630	1,630	
Grain Loading		gr/scf	0.012	0.012	
Temperature		°F	287	285	
3) SO_2 Removal Efficiency		%	92.6	96.5	
4) Utility					
Limestone		ton/d	125	180	
Electric Power		kW	7,100	11,000	
Industrial Water		gpm	185	277	
Catalyst (as 39% aqueous solution)		lb/d	900	1,300	
Fuel for Reheating (No. 6 oil)		10^6 Btu/h	103*	147*	*The reheating temperature is taken as 290°F.
5) By-product Gypsum		ton/d	230	330	
6) Gypsum Specification					
Average Size		μ	100	100	
Water Content		%	7	10	
7) Number of Operating Personnel		-	2 men x 4 shifts	2 men x 4 shifts	
8) Land Area Requirement		ft^2	103,000	142,000	
9) Construction Cost**		$	16,000,000	22,300,000	**Based on actual cost required in 1975.
10) Annual Operating Cost***					***8,000 hr/yr operation
Limestone Powder	($4/Ton)****	$/y	167,000 (2.6%)	240,000 (2.8%)	
Industrial Water	(0.02$/1,000 gal)****	$/y	1,800 (0.0%)	2,700 (0.0%)	****Based on the TVA report at 6th EPA FGD symposium, March 1976
Electric Power	(0.01$/kWh)****	$/y	568,000 (9.0%)	880,000 (10.4%)	
Catalyst	(0.062$/lb)	$/y	18,500 (0.3%)	26,900 (0.3%)	
Labor & Supervision	(8$/manhr)****	$/y	512,000 (8.1%)	512,000 (6.1%)	
Payroll & Plant Overhead	(140% of Labor & Supervision)	$/y	716,800 (11.4%)	716,800 (8.5%)	
Maintenance	(2% of Capital)	$/y	320,000 (5.1%)	446,000 (5.3%)	
Capital Charge	(17.5% of Capital)	$/y	2,800,000 (44.3%)	3,902,500 (46.2%)	
By-Product Credit	(1$/Ton)	$/y	-77,000 (-1.2%)	-110,000 (-1.3%)	
Sub-Total		$/y	5,027,100	6,616,900	
		mills/kWh	2.5	2.4	
Fuel Oil (No. 6)	(0.23$/gal)****	$/y	1,288,000 (20.4%)	1,830,000 (21.7%)	
Total		$/y	6,315,100 (100.0%)	8,446,900 (100.0%)	
		mills/kWh	3.2	3.0	

gas reheating to 172°F (78°C), the annualized costs are about 3.0 and 2.8 mills/kWhr for the 250 and 350 MW plants, respectively.

5.2.4 Evaluation

The plant cost is 10-30% higher than for the usual lime/limestone process because a larger scrubber and larger crystallizers are needed. Power consumption is larger because a higher L/G ratio is used. The process, however, is highly reliable and plant operation is very easy. The actual annualized operation cost may not be higher than for other processes because of the stable operation which requires little labor and maintenance. The process would be suitable where no skilled plant operators are available and a very high SO_2 removal efficiency is not required.

5.3 SODIUM LIMESTONE GYPSUM PROCESS

5.3.1 Outline

Sodium-limestone double alkali processes by-producing gypsum have been developed by Showa Denko jointly with Ebara Manufacturing Co. and by Kureha Chemical jointly with Kawasaki Heavy Industries. Many plants have been constructed by the processes as shown in Table 5-1.

Both processes use a Na_2SO_3-$NaHSO_3$ liquor at pH 6.2-6.8 as the absorbent (Reaction 5-1). Liquor discharged from the absorber is reacted with $CaCO_3$ to regenerate the Na_2SO_3 (Reaction 5-2).

$$Na_2SO_3 + SO_2 + H_2O = 2NaHSO_3 \quad (5\text{-}1)$$

$$2NaHSO_3 + CaCO_3 = Na_2SO_3 + CaSO_3 + H_2O + CO_2 \quad (5\text{-}2)$$

The resulting slurry containing $CaSO_3$ is filtered; Na_2SO_3 liquor is returned to the absorber and the $CaSO_3$ sludge is repulped and oxidized by air to produce gypsum.

Since a portion of the Na_2SO_3 is oxidized by O_2 in flue gas to form Na_2SO_4, which is incapable of absorbing SO_2, the Na_2SO_4 is decomposed by the following reaction (Reaction 5-3):

$$Na_2SO_4 + CaSO_3 + SO_2 + H_2O = 2NaHSO_3 + CaSO_4 \quad (5\text{-}3)$$

There is a difference between the two processes in the method of obtaining SO_2 to be used for Reaction 5-3. In the Showa Denko process, the SO_2 is obtained by treating $CaSO_3$ with H_2SO_4; while, in the Kureha-Kawasaki process a considerable portion of SO_2 is produced in a stripper by heating the $NaHSO_3$ liquor obtained by Reaction 5-3.

Recently, Kawasaki Heavy Industries constructed the Buzen plant, Kyushu Electric, in which an electrolytic cell developed by Ionics, U.S., is used to decompose the Na_2SO_4 to NaOH and H_2SO_4. NaOH is returned to the absorber and H_2SO_4 is used for acidulation of the calcium sulfite slurry to promote oxidation.

5.3.2 Ichihara Plant (Chiba Plant), Showa Denko

The plant has a capacity of treating 500,000 Nm^3/hr of flue gas from two 75 MW oil-fired boilers burning 3%-sulfur oil. Four vertical-cone type scrubbers in parallel are used as shown

in Figure 5-7. Details of the process are available in published literature.[10] Operation parameters are shown in Table 5-2.

The plant was completed in 1973 at a cost of 2 billion yen and has been operated by 2 unskilled persons per shift plus a skilled person and a maintenance specialist in the daytime. The operability in a recent year reached 98.7%, although minor troubles were encountered as shown in Table 5-7.

The annual cost is shown in Table 5-8. The FGD cost was 1.13 yen/kWhr last year including 8 years depreciation and fuel cost for reheating the gas to 130-140°C. A calculation based on inflated plant cost - double the 1973 cost in 1978 - and 15 years depreciation with reheating to 80°C indicates a cost of about 1.1 yen/kWhr.

5.3.3 Sakaide Plant, Shikoku Electric

The Sakide plant, Shikoku Electric, has a capacity of treating flue gas from a 450 MW oil-fired boiler by the Kureha-Kawasaki process by using two scrubbers in parallel.[16] Operation parameters are shown in Table 5-2. A flowsheet is shown in Figure 5-8.

The plant went into operation in October 1976 and had troubles mainly with separators, piping, and valves of the regeneration step. The problems have been gradually solved and operability in a recent year reached 98.5% (Table 5-9).

The plant normally purges no wastewater. To prevent the accumulation of magnesium derived from limestone, a magnesium removal step is incorporated. Chlorine concentration in

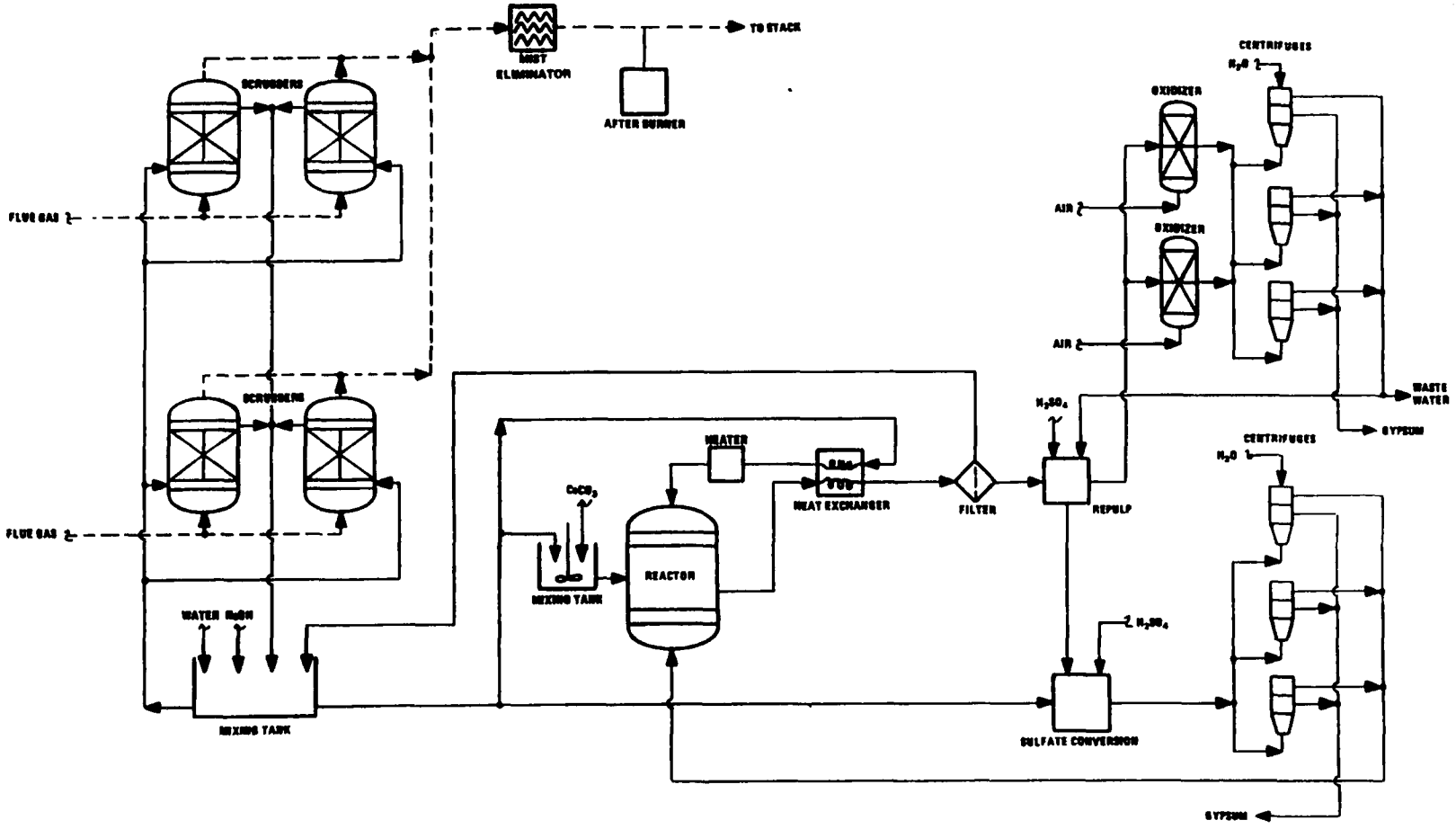

Figure 5-7. Flow sheet of Ichihara (Chiba) plant, Showa Denko.

TABLE 5-7. OPERATION HOURS OF ICHIHARA PLANT, SHOWA DENKO

	Hours			Availability		Opera-bility	
	Total (A)	Boiler operation (B)	FGD operation (C)	Boiler B/A(%)	FGD C/A(%)	C/B(%)	Remarks
Sept. 1976	720	720	718	100	99.7	99.7	
Oct.	744	744	737	100	99.1	99.1	Repair of pump
Nov.	720	490	490	68.0	68.0	100	Annual maintenance of boiler
Dec.	744	175	175	23.5	23.5	100	
Jan. 1977	744	744	744	100	100	100	
Feb.	672	672	640	100	95.3	95.3	Erosion of regeneration system
Mar.	744	740	721	99.4	96.9	97.5	Scaling in regeneration system
Apr.	720	717	717	99.7	99.7	100	
May	744	722	717	97.1	96.4	99.3	Inspection of blower
June	720	720	683	100	94.8	94.8	Scaling
July	744	744	744	100	100	100	
Aug.	744	695	697	93.4	91.1	97.5	Repair of control valve
TOTAL	8,760	7,883	7,783	90.0	88.8	98.7	

TABLE 5-8. FGD COST (ICHIHARA PLANT)

	Millions of yen
Plant cost	2,000
Annual cost	
Depreciation	256
Interest	114
Insurance & tax	48
Labor and overhead	30
Maintenance	60
NaOH (23,000 yen/ton)	79.5
H_2SO_4 (10,000 yen/ton)	57.6
$CaCO_3$ (4,500 yen/ton)	103.7
Electricity (5.9 yen/kWh)	172.8
Water (18 yen/ton)	8.3
Steam (1,900 yen/ton)	8.7
Fuel (30,000 yen/kl)	345.6
Total Annual Cost	1,284
(1.13 yen/kWhr at 7,580 hours annual operation)	

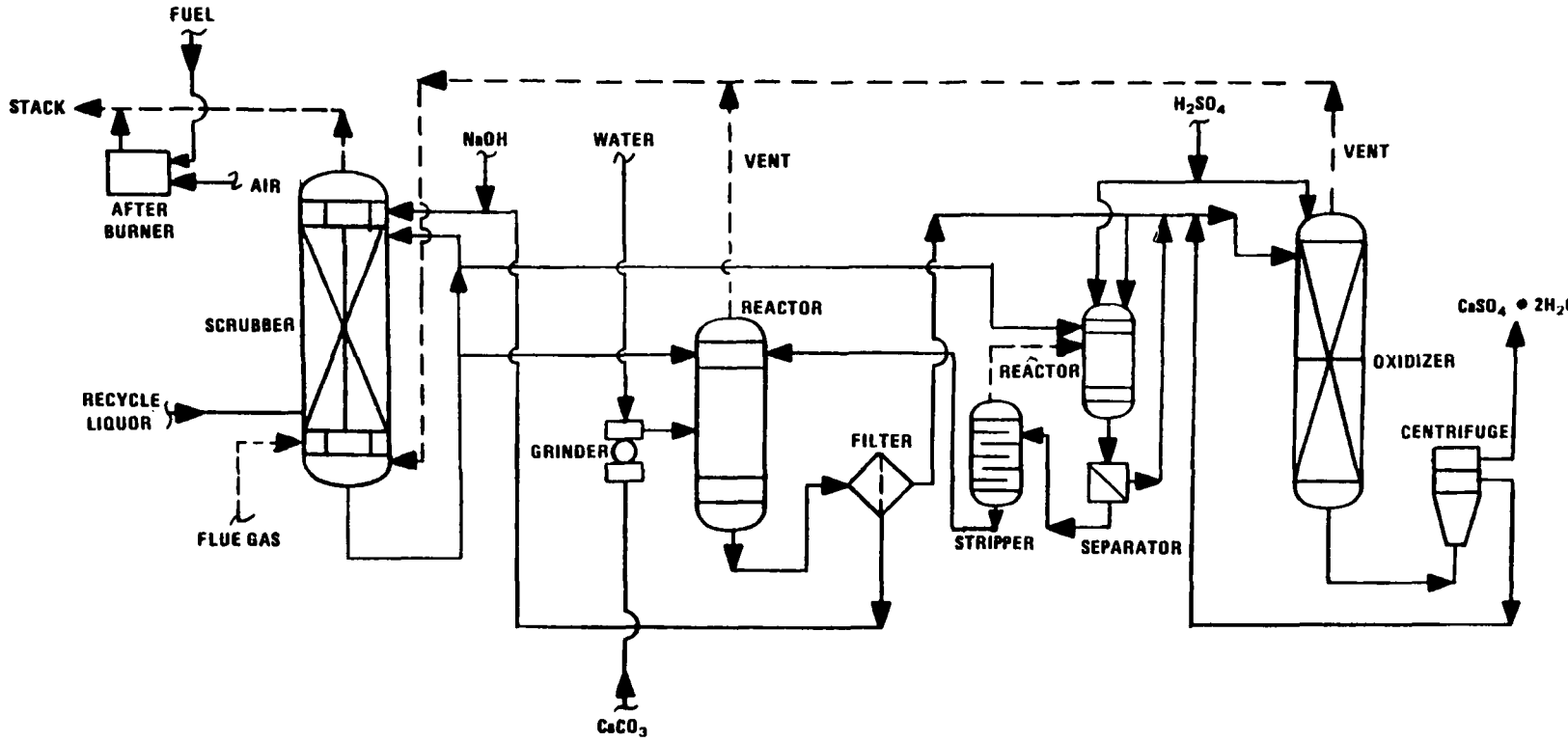

Figure 5-8. Flow sheet of Kureha-Kawasaki process.

TABLE 5-9. OPERATION HOURS OF SAKAIDE NO. 3 PLANT

	Hours			Availability		Opera-bility	
	Total (A)	Boiler oper-ation (B)	FGD oper-ation (C)*	Boiler B/A(%)	FGD C/A(%)	C/B (%)	Remarks
Oct. 1976	744	744	738	100	99.2	99.2	Leakage from liquor circulation pipe of scrubber.
Nov.	720	359	358	49.9	49.7	99.7	Scheduled annual maintenance of boiler. FGD start-up was delayed after boiler start-up.
Dec.	744	135	60	18.1	8.1	44.4	
Jan. 1977	744	744	744	100	100	100	
Feb.	672	672	672	100	100	100	
Mar.	744	744	744	100	100	100	
Apr.	720	450	440	62.5	61.1	97.8	Boiler stopped by trouble. FGD started up 10 hours after boiler started.
May	744	744	744	100	100	100	
June	720	720	720	100	100	100	
July	744	744	744	100	100	100	
Aug.	744	665	660	89.4	88.7	99.2	Boiler operation stopped.
Sept.	720	720	712	100	98.9	98.9	One scrubber operation test was carried out.
TOTAL	8,760	7,445	7,326	84.9	83.6	98.5	

*Operation hours when both of the two parallel scrubbers were in use.

the scrubber liquor has reached about 4,000 ppm but has had no adverse effect on the system. By-product gypsum is of good quality and has been sold for wallboard and cement.

5.3.4 Anan Plant, Shikoku Electric

The Anan plant, Shikoku Electric, has a capacity of treating flue gas from a 450 MW oil-fired boiler and is similar to the Sakaide plant mentioned above. The plant went into operation in August 1975. The operability in a recent year was close to 100% (Table 5-10). The monthly operation data and costs are shown in Table 5-11. The operation cost including 7 years depreciation and reheating to 100°C is about 1.6 yen/kWhr at a 70% power factor and about 2 yen/kWhr at a 50% power factor. The power consumption is not much, but fixed costs and costs for chemicals are relatively high.

5.3.5 Buzen Plant, Kyushu Electric

The plant has a capacity of treating half the flue gas from a 500 MW oil-fired boiler by using the Kureha-Kawasaki sodium-limestone gypsum process. The plant is characterized by the use of an electrolytic cell developed by Ionics, U.S., to decompose Na_2SO_4 to NaOH and H_2SO_4.

About 800 kg/hr of Na_2SO_4 formed in the FGD system by oxidation of Na_2SO_3 (2% O_2 in flue gas) is sent to the cell in a 20% solution after being treated by NaOH and Na_2CO_3 to reduce Ca and Mg below 10 ppm in total and Fe below 1.5 ppm. The by-produced NaOH is sent to the scrubber system and the H_2SO_4 (actually a mixture with Na_2SO_4) is sent to an oxidizer to lower the pH of the slurry and to promote $CaSO_3$ oxidation.

TABLE 5-10. RESULTS OF FGD OPERATION IN ANAN POWER STATION

Process: Kureha-Kawasaki Sodium Sulfite/Gypsum Process

Capacity: 450 MW, 625,000 x 2 Nm^3 /hr

Start-up: August, 1975

	Scrubber shutdown hours			FGD operability %	
	No. 1	No. 2	Reasons for shutdown	No. 1	No. 2
July 1976	245.2	248.1	Periodical maintenance & boiler minor servicing	100	100
Aug.	90.2	96.1	Stack cleaning	100	100
Sept.	4.7	0	Spray nozzle plugging	99.4	100
Oct.	0	0		100	100
Nov.	0	15.7	110 MW minimum load test run	100	100
Dec.	37.7	0	110 MW minimum load test run	100	100
Jan. 1977	5.0	0	Nozzle plugging in the inlet cooling zone	99.4	100
Feb.	0	16.5	Nozzle maintenance in the inlet cooling zone	100	97.7
Mar.	0	19.8	Air heater cleaning	100	100
Apr.	0	0		100	100
May	312	312	Annual maintenance of boiler and FGD	100	100
June	680.5	686	Annual maintenance of boiler and FGD	100	100
				99.9	99.7

TABLE 5-11. OPERATION DATA AND COSTS (ANAN PLANT, 1977)

		Apr.	May	June	July	Aug.	Sept.	Oct.	Nov.	Dec.
1. Generated Power	MWhr	239,452	103,139	20,225	243,334	225,493	232,646	212,108	254,193	162,290
2. Power Factor	%	73.9	56.2	41.6	72.7	67.3	71.8	63.4	47.6	48.5
3. Delivered Raw Material										
$CaCO_3$	T	5,506	2,290	43	5,302	5,423	5,677	5,196	3,182	3,494
NaOH	T	275	210	288	534	163	120	392	570	737
H_2SO_4	T	2,656	1,255	19	2,365	2,581	2,530	2,350	1,462	1,877
Steam	T	13,791	7,691	1,481	13,270	15,456	15,687	16,081	9,204	10,220
Oil	kl	1,813	841	82	1,686	1,428	1,321	1,216	679	793
Process water	T	44,055	27,133	12,811	42,723	40,718	41,381	39,844	41,749	32,472
Electricity	MWhr	4,589	2,623	876.3	42,667	4,706	4,506	4,516	3,335	3,421
Gypsum production (deliv. base)	T	9,656	4,481	0	8,657	9,555	10,145	8,951	6,131	6,637
4. Total Expenses*	10^3 yen	380,320	188,800	16,340	373,710	368,430	364,700	371,140	322,040	341,040
5. Operation Cost	Yen/kWhr	1.59	1.83	1.81	1.54	1.63	1.57	1.75	2.09	2.10

*Including 7 years depreciation and reheating to 100°C.

The plant has been operated since November 1977. The electrolytic cell has had a corrosion problem due to chlorine and other impurities. Studies are under way to prevent the corrosion. About 20-40% of the energy required for FGD is used by the cell.

An additional FGD unit to treat the remaining half of the gas from the boiler will be installed by 1980. Use of the cell substantially reduces the requirement for make-up NaOH and eliminates the consumption of sulfuric acid; however, it increases power consumption and makes the process even more complex.

5.3.6 Evaluation

Compared with the sodium-lime double alkali processes developed in the U.S., the limestone sodium-limestone gypsum processes have the following advantages and disadvantages:

Advantages:

1) Limestone is used.

2) Sodium consumption is less because gypsum contains much less liquor than does sulfite sludge.

3) The properties of gypsum are much better than the sludge.

Disadvantages:

1) The process is complex and the plant is costly.

2) Sulfuric acid is required.

Although the Kureha Kawasaki process consumes less sulfuric acid, the process is more complex than the Showa Denko

process. The use of the electrolytic cell may eliminate the need for sulfuric acid but may add to the complexity.

Since lime/limestone gypsum processes have been improved and can attain a high operability, the sodium-limestone gypsum process may not be attractive, unless substantial improvements are made to render it simpler and less costly.

5.4 DOWA ALUMINUM SULFATE LIMESTONE PROCESS

5.4.1 Outline

Dowa Mining Co. has developed a process which uses a basic aluminum sulfate solution at a pH of 3.5 as the absorbent and limestone as the precipitant. They have constructed 7 plants as shown in Table 5-1. In addition, a pilot plant with a capacity of treating 30,000 Nm^3/hr of flue gas from a coal-fired boiler will be constructed at the Tennessee Valley Authority, U.S., and a commercial plant with a capacity of treating 52,000 Nm^3/hr of flue gas from a pelletizing plant will be erected in Mainland China by 1980. Details of the process are available in published literature.

5.4.2 Okayama Plant (Tamano Plant), Naikai Engyo

A flowsheet of the plant is shown in Figure 5-9. The plant has a capacity of treating 72,000 Nm^3/hr of flue gas from an oil-fired industrial boiler which has no electrostatic precipitator. Operation parameters are shown in Table 5-2.

Flue gas at 170°C containing, 1,500 ppm of SO_2 and about 200 mg/Nm^3 of dust is first introduced in a cooler, in which it is cooled to 57°C with a spray of dilute aluminum

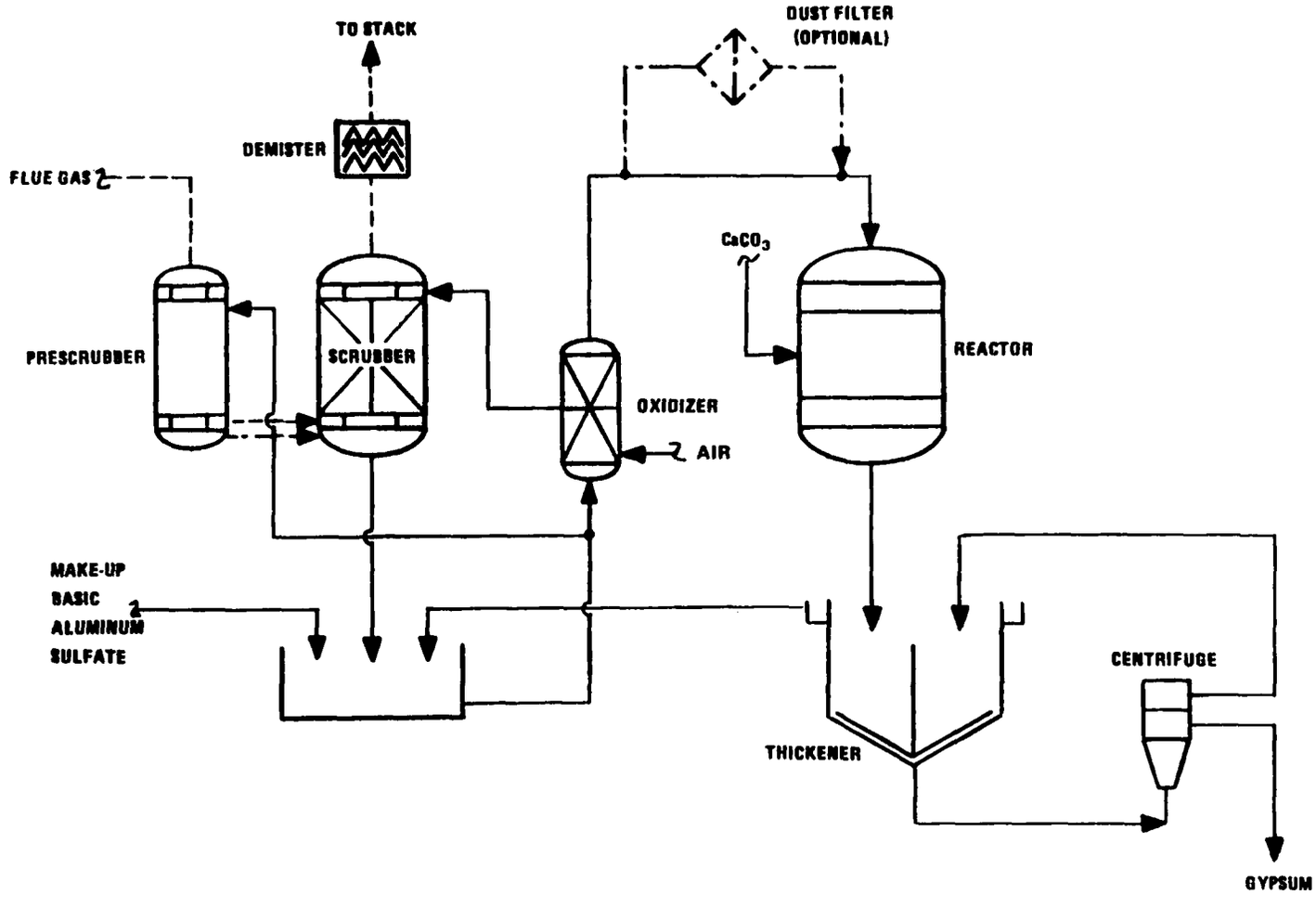

Figure 5-9. Flow sheet of Dowa process.

sulfate liquor. The gas is then sent to a packed absorber. The scrubber liquor contains a small amount of soluble inorganic catalyst to increase the SO_2 removal efficiency. Over 90% of the SO_2 is absorbed in the cooler and the absorber. A wire-mesh type demister is placed in an upper part of the absorber and is washed with 2.5 tons/hr of water. The aluminum sulfate-sulfite liquor discharged from the absorber is sent to an oxidizer, where the sulfite is oxidized to sulfate by air bubbles. The oxidized liquor is treated with limestone to precipitate gypsum, which is then centrifuged and washed with 1 ton/hr of water.

Chemical reactions for the process are listed below:

Absorption: $Al_2(SO_4)_3 \cdot Al_2O_3 + 3SO_2 = Al_2(SO_4)_3 \cdot Al_2(SO_3)_3$ (5-4)

Oxidation: $Al_2(SO_4)_3 \cdot Al_2(SO_3)_3 + 3/2O_2 = 2Al_2(SO_4)_3$ (5-5)

Precipitation: $2Al_2(SO_4)_3 + 3CaCO_3 + 6H_2O$ (5-6)
$= Al_2(SO_4)_3 \cdot Al_2O_3 + 3(CaSO_4 \cdot 2H_2O) + 3CO_2$

About 0.44 ton/hr of limestone, ground so that 80% passes through a 200 mesh screen, is consumed to by-produce 0.8 ton/hr of gypsum containing 8-10% of moisture and 0.1-0.2% Al_2O_3. The plant went into operation in March 1976 and has been operated smoothly. No wastewater was purged during the first year of operation, resulting in an increase in the impurity concentrations in the scrubber liquor: Cl reached 2,000 ppm and Mg 20,000 ppm. Since then, about 8 tons/day of wastewater have been purged to prevent further accumulation of impurities. To purge the water, a portion of the liquor discharged from the gypsum centrifuge is neutralized to pH 6 with limestone and a small amount of lime. This precipitates Al and the catalyst,

which are then returned to the scrubber system. The residual water, containing Cl and Mg, is then purged.

The operation hours in a recent year are shown in Table 5-12. The boiler was operated for over 8,000 hours and the FGD operability reached 99.6%, indicating smooth operation of the plant. Pressure drop of gas through the scrubber increased appreciably during the operation for a year due to soft deposits of solids on the packing. Therefore, the packing (plastic ball type) was removed from the scrubber and washed with water during the annual shutdown of the boiler for maintenance.

5.4.3 Economics

The plant cost 400 million yen in 1976. Operation cost figures are shown in Table 5-13. The plant consumes aluminum sulfate and a catalyst but the amount and cost are small. The annualized cost of desulfurization including 7 years depreciation without gas reheating is ¥3,850/kl oil ($13.73 at $1 = ¥280) which is equivalent to ¥0.96/kWhr. The cost should be lower for a larger plant due to scale merits.

5.4.4 Evaluation

The process is simple and operation is easy. Aluminum sulfate has been used widely for wastewater treatment, is readily available, and does not affect the environment. Due to the low pH of the scrubber liquor, the L/G ratio is fairly high but the liquor readily reacts with limestone. The plant cost as well as operation cost is low. The pilot plant test at TVA will give information on the applicability for coal-fired boilers.

TABLE 5-12. OPERATION HOURS OF NAIKAI PLANT (DOWA PROCESS)

	Hours			Availability (%)		Opera-	
	Total (A)	Boiler oper- ation (B)	FGD oper- ation (C)	Boiler (B/A)	FGD (C/A)	bility (C/B)(%)	Remarks
Aug. 1976	744	744	741	100	99.6	99.6	FGD stop due to boiler shutdown
Sept.	720	608	602	84.4	83.5	99.0	
Oct.	744	744	721	100	96.9	96.9	Repair of oxidizer nozzle
Nov.	720	720	720	100	100	100	
Dec.	744	680	680	91.4	91.4	100	
Jan. 1977	744	623	623	83.7	83.7	100	
Feb.	672	584	584	86.9	86.9	100	Scheduled boiler shutdown
Mar.	744	515	515	69.2	69.2	100	
Apr.	720	720	720	100	100	100	
May	744	743	743	99.9	99.9	100	
June	720	577	577	80.1	80.1	100	Scheduled boiler shutdown
July	744	744	744	100	100	100	
TOTAL	8,760	8,002	7,970	91.3	91.0	99.6	

TABLE 5-13. COST FIGURES (OKAYAMA PLANT, NAIKAI)
Note: $1 = ¥280

Gas volume	72,000 Nm^3/hr	Sulfur in oil 3% SO_2 1,500 ppm	
Removal of SO_2	92%	Rate of operation 95%, 347 days/year	
Plant area	20 m x 30 m	By-product $CaSO_4 \cdot 2H_2O$, 0.8 t/hr	
Plant cost	$1,357,143 (Plant, $1,178,571; Civil, $178,571)		

	Item	Calculation method	Calculation ($)	Amount ($)
1	Depreciation	Plant cost x 0.9 x 1/7 year	$1,357,143 x 0.9 x 1/7	$174,490
	Rate of interest	Plant cost x 0.55 x 0.06	$1,357,143 x 0.55 x 0.06	44,786
	Fixed property tax	Plant cost x 0.014 x 0.4 x 0.55	$1,357,143 x 0.014 x 0.4 x 0.55	4,179
	TOTAL			$223,455
2	Labor cost	$14,286/year x (4 men)		$ 57,144
	Repair cost	Plant cost x 0.03	$1,357,143 x 0.03	40,714
	TOTAL			$ 97,858
3	Electric power rates	480 kWh/hr @$0.043/kWh	480 x 8,328 hr x 0.043	$171,318
	Process water cost	5.5 t/hr, @$0.21/$m^3$	5.5 x 8,328 x 0.21	9,814
	Aluminum sulfate	9 kg/hr, @$0.05/kg	9 x 8,328 x 0.05	3,748
	Catalyst cost	1 kg/hr, @$0.43/kg	1 x 8,328 x 0.43	3,581
	$CaCO_3$ consumption	0.44 t/hr, @$17.86/ton	0.44 x 8,328 x 17.86	65,445
	TOTAL			$253,879
4	Cost of production	1 + 2 + 3	223,455 + 97,858 + 253,879	$575,192
5	Total indirect accounts	(2 + 3) x 0.12	(97,858 + 253,879) x 0.12	$ 42,257
6	Cost	4 + 5	575,192 + 42,257	$617,449
7	Income of by-product			0
8	Balance	6 - 7		$617,449
9	Total oil consumption/year for boiler	5.4 kl/hr	5.4 x 8,328 44,971 kl/year	
10	All total cost/kl oil		617,449/44,971	$13.73/kl

5.5 KAWASAKI MAGNESIUM GYPSUM PROCESS

5.5.1 Characteristics

The process is characterized by the use of a lime/limestone slurry to which a fairly high concentration of Mg (about 5% as $MgSO_4$) is added in order to prevent scaling and to increase SO_2 removal efficiency. Kawasaki Heavy Industries experienced a scaling problem with a lime process plant completed in 1973, discovered the effects of the magnesium, and subsequently constructed two commercial plants with the magnesium gypsum process (Table 5-1).

A lime slurry containing Mg has also been used for scale prevention in the U.S. in throw-away sludge processes. The Kawasaki process uses a much higher concentration of magnesium so that the major absorbent is magnesium hydroxide and sulfite. It also by-produces gypsum salable for wallboard and cement. The process may be classified as one of the double-alkali processes.

5.5.2 Process Description

A flowsheet of the Saidaiji plant, Japan Exlan Co., is shown in Figure 5-10. The plant has a capacity of treating 300,000 Nm^3/hr of flue gas from an industrial boiler burning 2.8%-sulfur oil. The boiler is often operated at about 50% load. Two scrubbers were installed in parallel. Only one of them is operated when the boiler is at half load. The boiler has no electrostatic precipitator; therefore, two-stage multi-venturi type scrubbers are used to remove particulates at high efficiency.

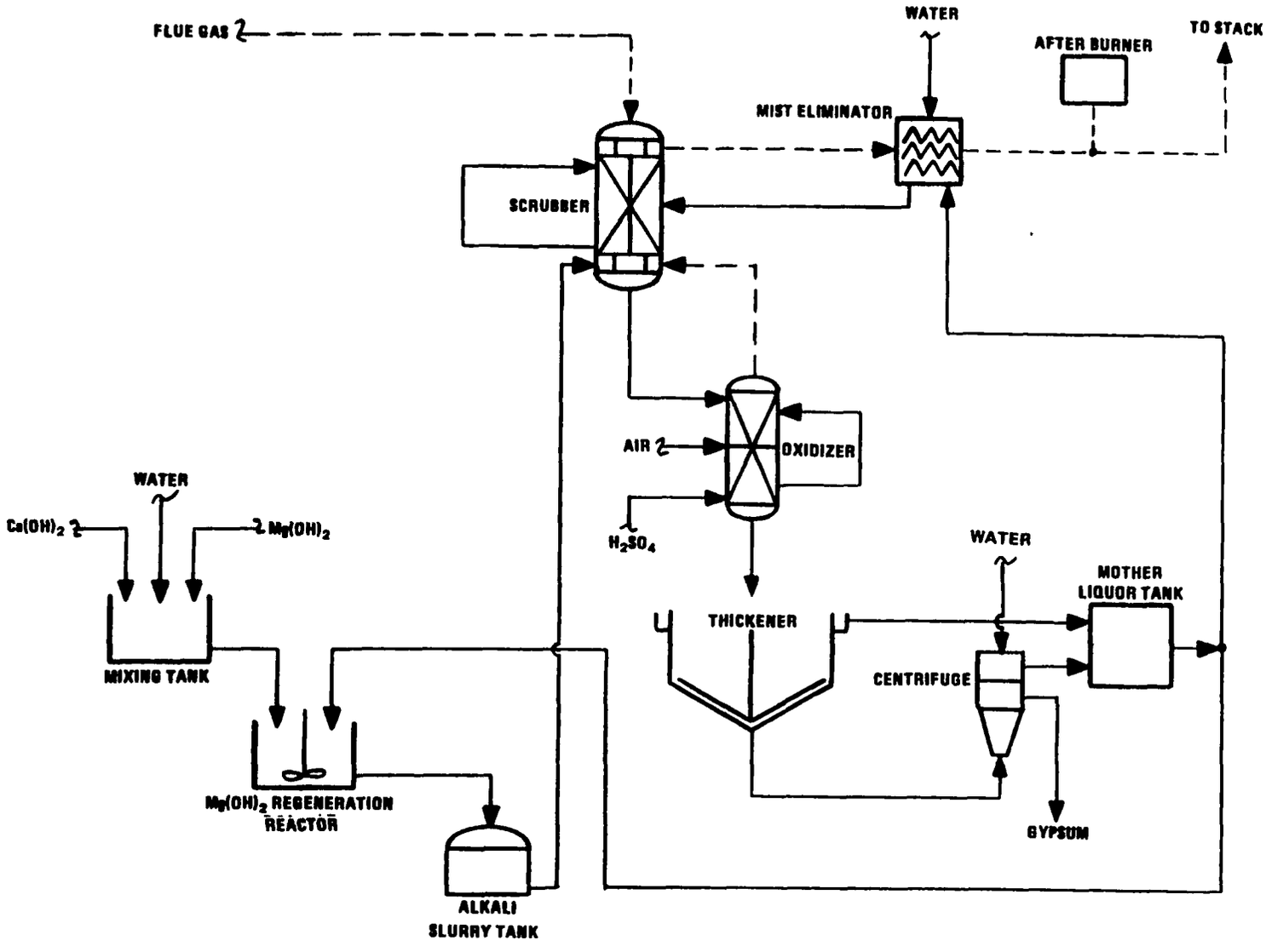

Figure 5-10. Flow sheet of Japan Exlan plant.

The plant has a regeneration reactor in which mother liquor from a gypsum centrifuge, containing $MgSO_4$, is reacted with $Ca(OH)_2$ to precipitate $Mg(OH)_2$ and gypsum.

$$MgSO_4 + Ca(OH)_2 + 2H_2O = Mg(OH)_2 + CaSO_4 \cdot 2H_2O \qquad (5\text{-}7)$$

The slurry containing $Mg(OH)_2$ and gypsum is then fed to the absorber, where the $Mg(OH)_2$ reacts as the absorbent and the gypsum works as crystal seed to prevent scaling.

$$Mg(OH)_2 + SO_2 = MgSO_3 + H_2O \qquad (5\text{-}8)$$

$$MgSO_3 + H_2O + SO_2 = Mg(HSO_3)_2 \qquad (5\text{-}9)$$

Slurry discharged from the scrubber is sent to an oxidizer, where magnesium sulfite and bisulfite are oxidized by air to form magnesium sulfate. The slurry is sent through a thickener to a centrifuge. The solids are washed with water in the centrifuge, to reduce the magnesium content to 0.1-0.2% and to produce gypsum which is useful for wallboard and cement. The mother liquor and wash water are returned to the reactor.

The process has no cooler and a large amount of water is evaporated in the scrubber. The plant is operated without any wastewater production. If the process is applied to a coal-fired system, however, a prescrubber may be needed to remove chlorine and fly ash. Major equipment in the plant is listed in Table 5-14.

The SO_2 concentration of the flue gas is reduced from 1,400 to 100 ppm by scrubbing with the slurry, which has a pH of 5-6. Since the boiler has no electrostatic precipitator, flue gas contains nearly 200 mg/Nm^3 of dust. This is reduced to about 50 mg/Nm^3 after scrubbing and reheating. The gypsum

TABLE 5-14. MAJOR EQUIPMENT LIST (SAIDAIJI PLANT, JAPAN EXLAN CO.)

Item	Type	Capacity
No. 1 Absorber	Two stage multi-venturi	160,000 Nm^3/h
No. 2 Absorber	Two stage multi-venturi	140,000 Nm^3/h
No. 1 Forced draft fan	Turbo, with double suction	160,000 Nm^3/h x 350 mmH_2O
No. 2 Forced draft fan	Turbo, with double suction	140,000 Nm^3/h x 350 mmH_2O
No. 1 Absorbent circulation pump	Centrifugal	530 m^3/h x 55 m x 3 (2 out of 3 in operation)
No. 2 Absorbent circulation pump	Centrifugal	530 m^3/h x 55 m x 3 (2 out of 3 in operation)
No. 1, No. 2 Oxidizer	Cylindrical bubbling tower	
Air compressor for oxidizer	2-stage turbo compressor	
Regeneration tank	Cylindrical vertical	3.3 m^3
Alkali slurry tank	Cylindrical vertical	58 m^3
Mother liquor tank	Cylindrycal vertical	180 m^3
Sulfuric acid tank	Cone roof	12 m^3
Gypsum centrifuge	Basket type centrifuge	
Mist eliminator	Louver	

product is dark colored because of the dust, but is still useful. The particulates reportedly cause no other problems in the system. The plant consumes 953 kg/hr of $Ca(OH)_2$ and 6 kg/hr of $Mg(OH)_2$ and by-produces 2,214 kg/hr of gypsum.

The relations between absorbent slurry pH and L/G to the SO_2 removal efficiency are shown in Figures 5-11 and 5-12.

Another commercial plant, the Okazaki plant, Unitika Co., is similar to the Saidaiji plant, except that it uses a single scrubber train, and it uses limestone in addition to lime. Lime is added to the reactor and limestone is added to the absorber; the ratio of limestone to lime is about 5 to 1. Operation parameters of the plant are shown in Table 5-2. The Okazaki plant consumes 920 kg/hr of $CaCO_3$, 200 kg/hr of $Ca(OH)_2$, 120 kg/hr of H_2SO_4, and 10.9 tons/hr of industrial water; it by-produces 2,280 kg/hr of gypsum containing 10% water. It also operated without any wastewater production.

5.5.3 Operation of Commercial Plants

The Saidaiji plant was put into operation in January 1976. Formation of soft scale in a pipe from the reactor forced a 4-day plant shutdown later in the month to install an additional pipe for use during cleaning of the original pipe. The plant was shut down again for 10 days in February 1976 to remove scale in mist eliminators, which had been washed with a circulating liquor. Both fresh water and circulating liquor have been used since to prevent scaling. The wash water has been discharged to the scrubber. Since a large amount of water is evaporated in the scrubber, no wastewater is discharged from the plant. The boiler has been shut down twice a year for maintenance. The operability of the FGD plant since start-up has

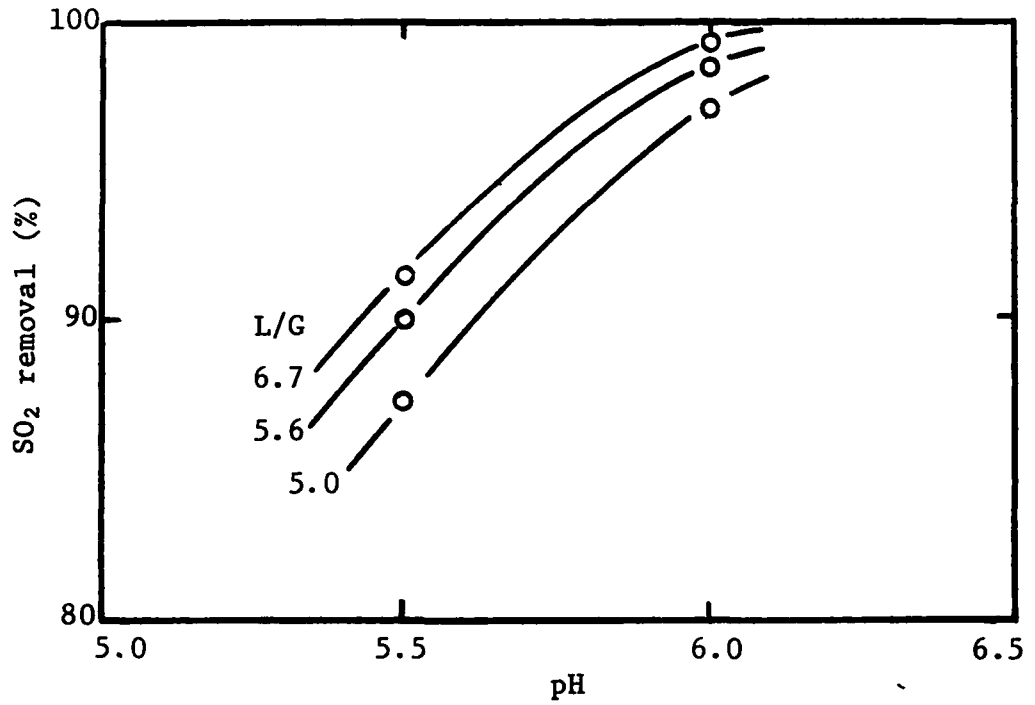

Figure 5-11. Absorbent pH and SO_2 removal.

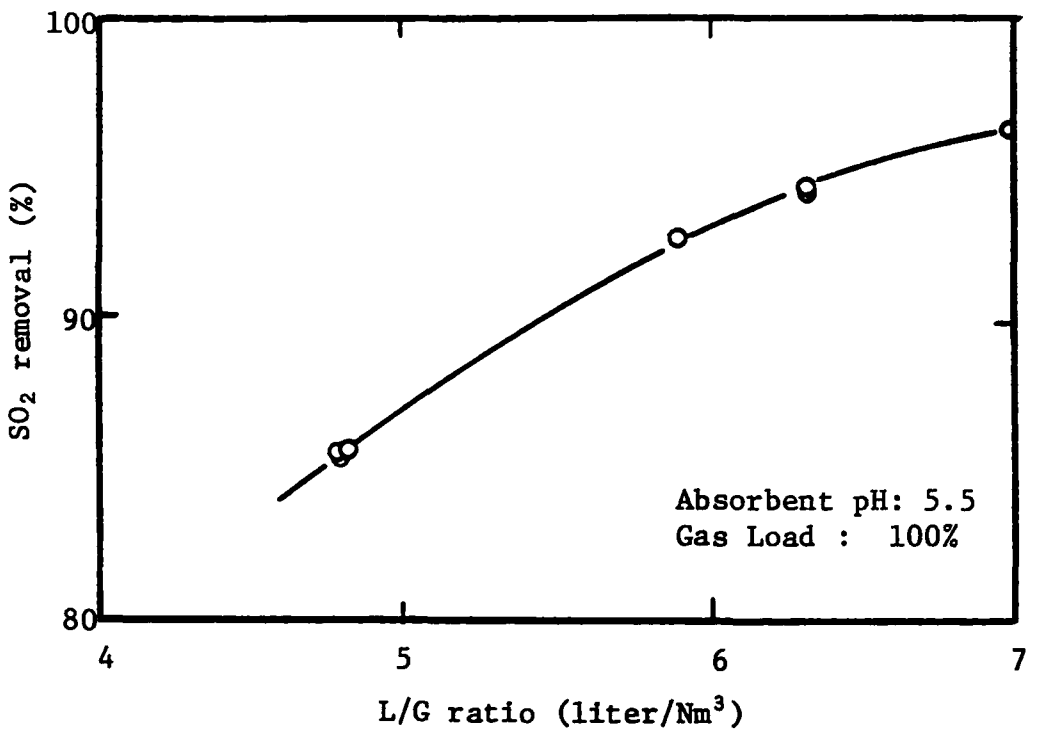

Figure 5-12. Relation between L/G ratio and SO_2 removal.

reached over 98%. The plant is operated by one person per shift.

Operation of the Okazaki plant (200,000 Nm^3/hr) was started in January 1976. Problems similar to those at the Saidaiji plant were encountered at the beginning of operation but were solved fairly easily. The performance of the plant in a recent year is shown in Table 5-15. Operability in this year exceeds 99%. Repair work was made during the scheduled shutdown of the boiler.

Tests With Flue Gas from Coal-Fired Boilers--

Kawasaki has conducted pilot plant tests with flue gas (5,000 Nm^3/hr) from a coal-fired utility boiler containing 500-1,000 ppm of SO_2 and 40 ppm of Cl at 130°C using a single stage mono-venturi scrubber and $Ca(OH)_2$ -$Mg(OH)_2$ slurry. The tests also have shown the effects of magnesium to increase SO_2 removal efficiency and to reduce the tendency for scaling. There has been no plan yet to construct a commercial plant for flue gas from a coal-fired boiler using the process.

5.5.4 Evaluation

The process is fairly simple and plant operation seems easy. Power consumption is low - 1.7% of the power generated - because of the relatively low L/G ratio and the slight pressure drop involved. These attractive features are due to the use of magnesium as the absorbent. No-wastewater operation is another advantage. Although chlorine accumulates in the scrubber liquor, adverse effects are reduced by the presence of magnesium.

TABLE 5-15. PERFORMANCE OF OKAZAKI PLANT, UNITIKA

	Hours			Availability (%)		Opera-	
	Total (A)	Boiler oper- ation (B)	FGD oper- ation (C)	Boiler (B/A)	FGD (C/A)	bility (C/B)(%)	Remarks
Sept. 1976	720	720	720	100	100	100	
Oct.	744	744	672	100	90.3	90.3	Inspection of absorber. Repair of agitator sealing.
Nov.	720	720	720	100	100	100	
Dec.	744	744	744	100	100	100	
Jan. 1977	744	744	744	100	100	100	
Feb.	672	672	672	100	100	100	
Mar.	744	744	744	100	100	100	
Apr.	720	192	192	26.7	26.7	100	Scheduled boiler shutdown*
May	744	744	744	100	100	100	
June	720	720	720	100	100	100	
July	744	744	744	100	100	100	
Aug.	744	744	744	100	100	100	
TOTAL	8,760	8,232	8,160	94.0	93.1	99.1	

*Spray piping in absorber and mist eliminator was repaired during the period.

Oxidation of the magnesium salts occurs much more readily than oxidation of calcium sulfite. The plants have used small amounts of sulfuric acid to lower the slurry pH from 5.5 to 5.0 in order to promote the oxidation. However, the acid may not be needed when inlet and outlet SO_2 concentrations are higher, as in most plants in the U.S., because the slurry pH can easily be reduced to 5.0 by scrubbing. No make-up magnesium hydroxide is needed when an MgO-rich lime is used.

Another advantage of the process is the negligible formation of dithionate ion $S_2O_6^{--}$. This ion can cause COD problems with wastewater. 'It is known that $S_2O_6^{--}$ increases when SO_3^{--} ion is oxidized at a low pH. The pH of the slurry at the oxidation step is about 5, which is higher than the usual oxidation pH of 3.5-4.0 in lime/limestone processes.

Magnesium tends to prevent the crystal growth of gypsum. However, Kawasaki Heavy Industries has succeeded in by-producing gypsum which has a good crystal size, can be centrifuged to about 10% moisture, and is useful for wallboard and cement.

On the other hand, the process has a few minor disadvantages. The process requires lime, which is much more expensive than limestone. Although the Okazaki plant has used limestone, lime should give better play to the advantages of the process. Need for a reactor may not be an appreciable disadvantage, because the reactor is simple and is not much more costly than the lime slurry preparation tank for the lime/limestone process. The scrubber contains over 300 small venturis made of plastic and is highly efficient for particulate removal, but this design may not be adequate for a large size scrubber.

5.6 KOBE STEEL CALCIUM CHLORIDE PROCESS

5.6.1 Characteristics

Accumulation of chlorine in the scrubber liquor of lime/limestone processes tends to reduce SO_2 removal efficiency and to increase scaling. Kobe Steel Co. has found that a much higher chlorine concentration can have beneficial effects on FGD. They have developed a process using a 30% calcium chloride solution dissolving lime as the absorbent. The solution has the following advantages over the conventional lime slurry:

1) Solubility of lime in the solution is 7 times better than in water (Figure 5-13), reportedly allowing the use of a much smaller L/G ratio than with the standard lime process. (3 versus 10).

2) Since the vapor pressure of the solution is low (Figure 5-14), the scrubber outlet gas temperature can be high (70°C versus 55-60°C). The process therefore, requires less reheating and less cooling water.

3) The oxidation rate is small and therefore less gypsum is formed in the cooler and scrubber (Figure 5-16). This helps scale prevention.

4) Calcium chloride is highly hygroscopic and neither the solution nor the slurry dries up in any part of the cooler, scrubber, or demister. This prevents the formation of hard scale.

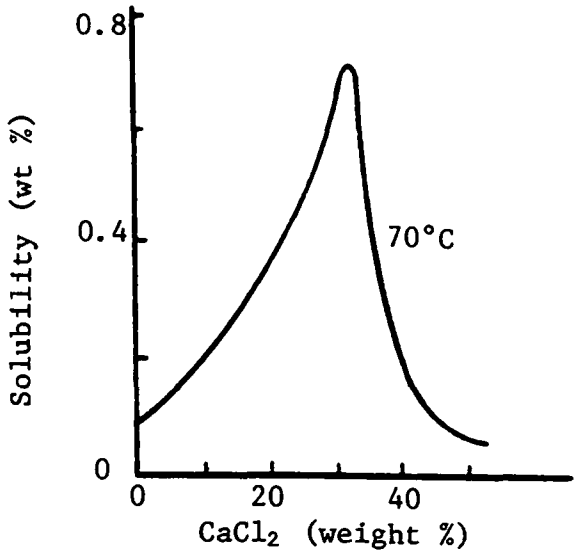

Figure 5-13. Solubility of $Ca(OH)_2$ in $CaCl_2$ solution.

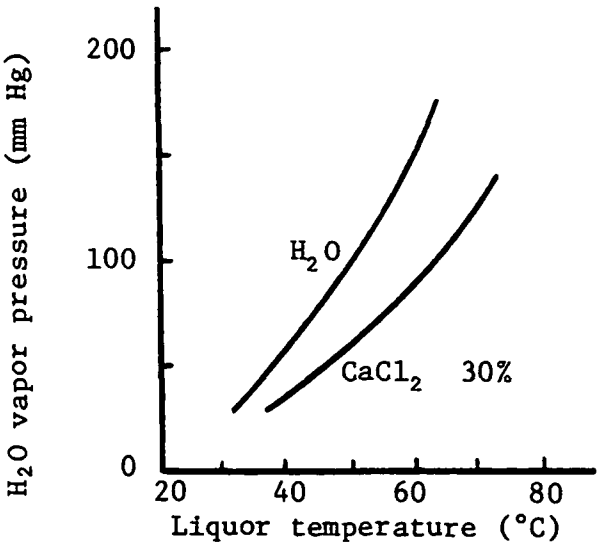

Figure 5-14. Vapor pressure on $CaCl_2$ solution.

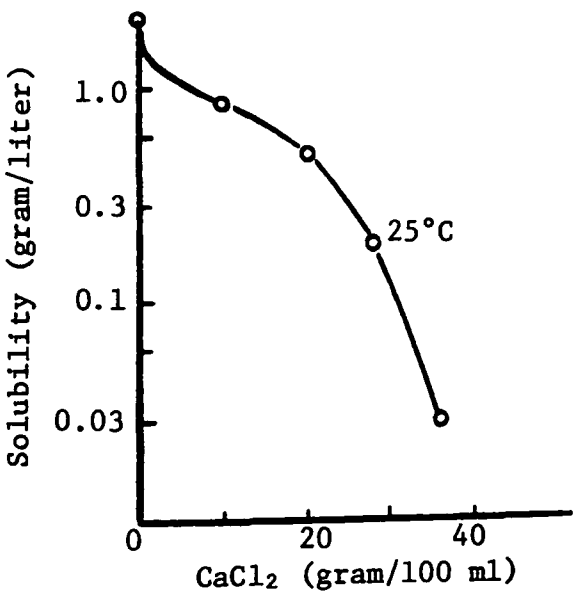

Figure 5-15. $CaSO_4$ solubility in $CaCl_2$ solution.

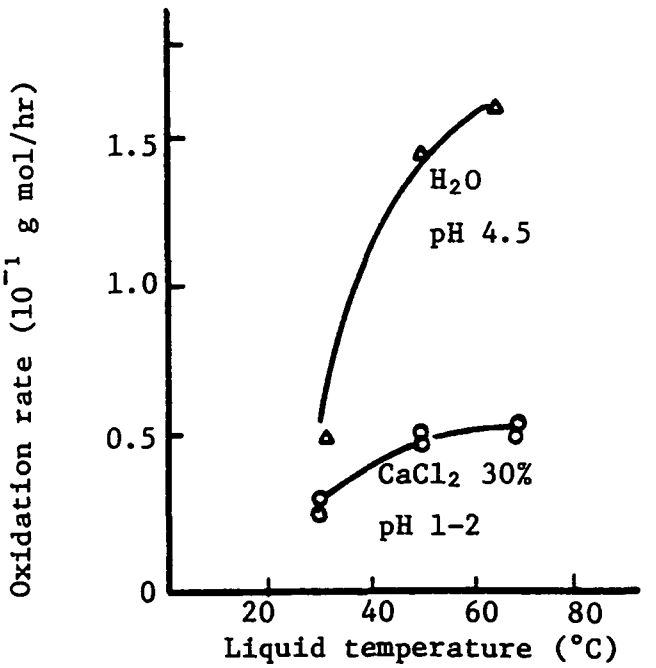

Figure 5-16. Oxidation rate of $CaSO_3$ to $CaSO_4$ (at optimum pH)

A flowsheet of the process is shown in Figure 5-17. Flue gas is first cooled to about 70°C in the cooler. The cooling liquor is weak calcium chloride solution (about 5%) from the gypsum centrifuge which is concentrated to 30% in the cooler. The cooled gas is then scrubbed in the Sanabs Scrubber, a kind of spray tower with a parallel gas-liquid flow. The scrubbing liquor is a 30% calcium chloride solution dissolving lime which contains about 6% solids (calcium sulfite and gypsum). Operation parameters are shown in Table 5-2.

The slurry leaving the scrubber is thickened and centrifuged. Most of the liquor is returned to the scrubber. This separation is needed to promote the oxidation of the sulfite to gypsum, since the oxidation occurs slowly in a concentrated calcium chloride solution. The calcium sulfite sludge is repulped with water and a small amount of sulfuric acid. It is then oxidized by air to form gypsum. The gypsum slurry is centrifuged and the liquor from the centrifuge, a solution of about 5% $CaCl_2$, is returned to the cooler. The by-product gypsum contains about 10% moisture and 0.5% $CaCl_2$ and is useful for wallboard and cement production. Normally, no wastewater is purged.

Five commercial plants are in operation. One is under construction to treat flue gas from an iron-ore sintering machine (Table 5-1). The process was recently licensed to Uhde, West Germany.

5.6.2 Operation of Commercial Plants

Table 5-16 shows the operation hours in a recent year of the Amagasaki plant, Kobe Steel, which has a capacity of treating 175,000 Nm^3/hr of flue gas from an iron-ore sintering

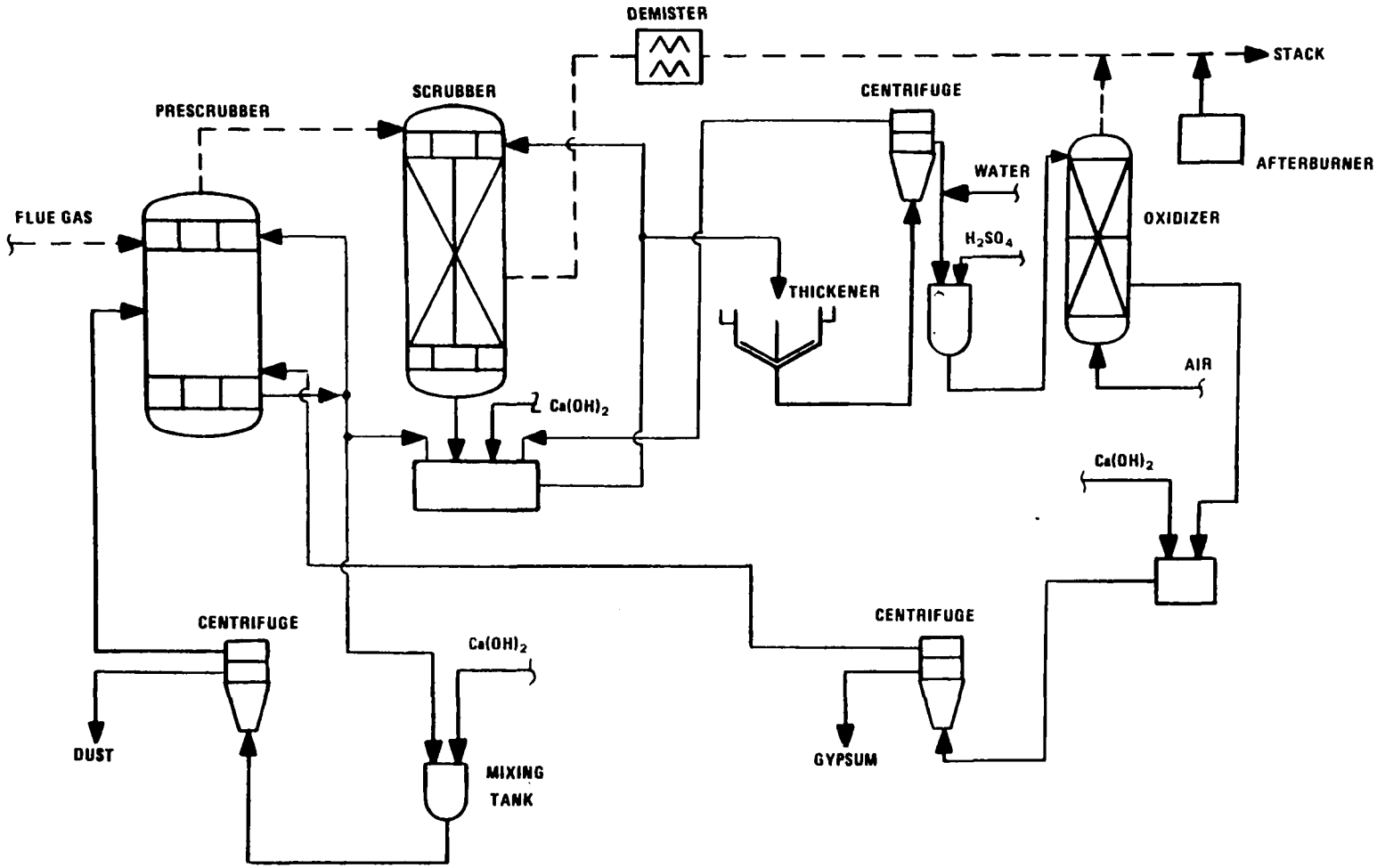

Figure 5-17. Flow sheet of Kobe steel process.

TABLE 5-16. OPERATION OF AMAGASAKI PLANT, KOBE STEEL (SM = SINTERING MACHINE)

	Hours			Availability (%)		Opera-	
	Total (A)	SM oper- ation (B)	FGD oper- ation (C)	SM (B/A)	FGD (C/A)	bility (C/B)(%)	Remarks
Apr. 1976	720	686	622	95.3	86.4	90.7	Start-up problems
May	744	698	667	93.9	89.7	95.5	
June	720	648	624	90.0	86.7	96.3	
July	744	650	637	87.4	85.6	98.0	
Aug.	744	698	696	93.8	93.6	99.8	
Sept.	720	672	653	93.4	90.8	97.2	Scrubber scaling
Oct.	744	709	709	95.3	95.3	100	
Nov.	720	615	615	85.5	85.5	100	Shutdown for 4 days*
Dec.	744	708	708	95.2	95.2	100	
Jan. 1977	744	599	599	80.6	80.6	100	Shutdown of SM
Feb.	672	657	657	97.7	97.7	100	
Mar.	744	0	0	0	0	0	Modification of plant†

*To change piping to use slurry instead of clear liquid as absorbent.

†Repair of stack, cooler lining, and mist eliminator.

machine. The plant, the first commercial plant by the process, went into operation in January 1976, and had minor start-up problems. The operability was 90-96% in April through June and gradually approached 100% as the problems were solved. At the beginning, the absorbent used in the system was a clear liquor, a 30% $CaCl_2$ solution with dissolved lime. A tendency for scale formation was observed. In November 1976, the plant was shut down for four days to modify the system in order to use a slurry containing about 6% solids as the absorbent so that gypsum crystals could be circulated as seeds. The scaling problem was thus solved. Operation parameters of the plant are similar to those of the Nakáyama Steel plant shown in Table 5-2.

In March 1977 the plant was shut down for 3 months to repair a stack, the cooler lining, and a mist eliminator. Operation resumed in June 1977 and has since been carried out at nearly 99% operability.

Table 5-17 shows the operation hours in the first year after start-up of the Funamachi plant, Nakayama Steel, which has a capacity of treating 375,000 Nm^3/hr of flue gas from an iron-ore sintering machine. From the beginning, the absorbent used in the plant has been a calcium chloride liquor containing dissolved lime and solids. The scrubbers have had no scaling problem. A Euroform demister is used which has higher efficiency but is more vulnerable to scaling than the conventional Chevron type demister. The demister had minor plugging problems and required occasional cleaning. The demister system was modified in December 1976 and the problem has been nearly solved. The average operability in the first year after start-up was 97.4%. The operability after January 1977 exceeded 98%.

TABLE 5-17. OPERATION HOURS OF FUNAMACHI PLANT, NAKAYAMA STEEL (SM = SINTERING MACHINE)

	Hours			Availability (%)		Opera-bility	
	Total (A)	SM oper-ation (B)	FGD oper-ation (C)	SM (B/A)	FGD (C/A)	(C/B)(%)	Remarks
June 1976	720	696	651	96.7	90.4	93.5	Start-up troubles
July	744	720	716	96.8	96.2	99.4	Mist eliminator plugging
Aug.	744	720	714	96.8	96.0	99.2	Repair of rubber lining
Sept.	720	696	696	96.7	96.7	100	
Oct.	744	720	720	96.8	96.8	100	
Nov.	720	696	692	96.7	96.1	99.4	Mist eliminator plugging
Dec.	744	720	576	96.8	77.4	80.0	Modification of mist eliminator
Jan. 1977	744	720	720	96.8	96.8	100	
Feb.	672	643	635	95.7	94.5	98.8	Unusual vibration
Mar.	744	720	720	96.8	96.8	100	
Apr.	720	588	588	81.7	81.7	100	Maintenance of SM
May	744	732	732	98.4	98.4	100	
TOTAL	8,760	8,371	8,160	95.6	93.1	97.4	

5.6.3 Evaluation

The process has advantages over usual lime scrubbing processes in that it has a smaller tendency to form hard scale, reportedly uses a lower L/G ratio, gives a higher outlet gas temperature, and produces no wastewater. On the other hand, an additional centrifuge and highly corrosion-resistant materials are needed. Titanium was used at the hot zone in the cooler of the first commercial plant. Plants constructed later use pumice stone instead of the expensive titanium.

The plants have a cooler separate from the scrubber in order to remove dust and to obtain good quality gypsum. For the purpose of producing throw-away gypsum, the cooler and the scrubber can be put together, eliminating the dust removal step.

The Kobe Steel process is of particular interest for treating chlorine-rich flue gases, such as flue gas from burning coal. If this flue gas were to be treated by a standard lime scrubbing process by-producing gypsum with about 10% moisture and without a wastewater purge, chlorine would accumulate in the scrubber liquor to about 20-35% $CaCl_2$. This is the level at which the amount of chlorine entering the system with the flue gas would equal that leaving the system with the gypsum. In other words, any lime-gypsum process treating flue gas from coal and purging no wastewater will naturally be operated in the range of the Kobe process. No makeup calcium chloride will be needed when the Kobe Steel process is used.

The process is similar to the Hoelter process of West Germany. Kobe Steel is ahead of Hoelter in patent application and commercial application, while Hoelter seems to use an additive which is said to improve the process.

5.7 OTHER INDIRECT LIME-GYPSUM PROCESSES

5.7.1 Kurabo Acidic Ammonium Sulfate Process

Kurabo Engineering Co. has developed a process which uses an acidic ammonium sulfate liquor at a pH of 3.5-4.0 as the absorbent and lime as the precipitant. Plume formation, a major problem with ammonia scrubbing processes, is eliminated by using the acidic liquor, because the NH_3 vapor pressure of the liquor is less than 1 ppm equivalent.

A flowsheet of the process is shown in Figure 5-18. After SO_2 absorption, the scrubbing liquor is oxidized by air bubbles to convert ammonium sulfite into sulfate. Most of the liquor leaving the oxidizer is returned to the absorber; a portion, however, is sent to three reactors in series and treated with lime to precipitate gypsum. The gypsum is then centrifuged. The liquor and wash water discharged from the centrifuge are sent to an aqueous ammonia tank. The aqueous ammonia is then sent back to the oxidizer.

Kurabo constructed 5 commercial plants, as shown in Table 5-1. The operation parameters of one of the plants are shown in Table 5-2. The operability of the plant in a recent year reached 99.3%. The plant normally purges no wastewater. However, to prevent the accumulation of chlorine and magnesium in the scrubber liquor, it may be necessary to purge some wastewater occasionally after removing ammonia. Such a purge has been required in commercial operation.

The pH of the scrubber liquor is much lower and consequently the L/G ratio much larger than in the conventional ammonia-lime process, but the Kurabo process has no plume

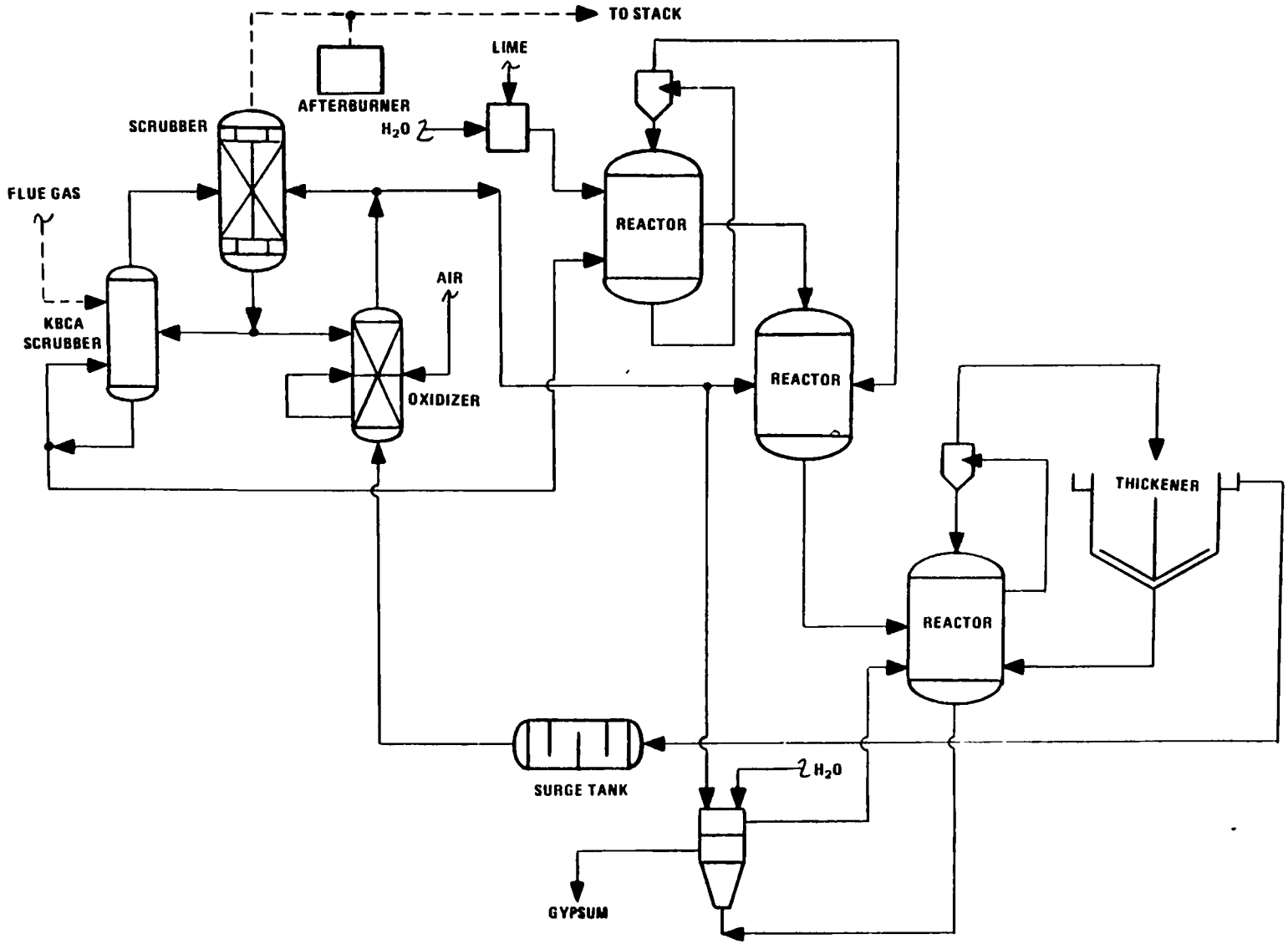

Figure 5-18. Flow sheet of Kurabo ammonium sulfate-gypsum process.

problem; plume is virtually invisible. In comparison with the Dowa and Chiyoda (101) processes, the pH is higher and the L/G is smaller, but limestone cannot be used.

5.7.2 Nippon Kokan Ammonia Lime Process

Nippon Kokan, at the Keihin Works, has continued tests with a pilot plant of an ammonia-lime gypsum process with a capacity of treating 150,000 Nm^3/hr of flue gas from an iron-ore sintering machine. The process is characterized by the use of a screen type absorber and by treating an ammonium sulfite-sulfate liquor with lime to recover gaseous ammonia followed by the oxidation of calcium sulfite to obtain gypsum. Details of the process are available in published literature.[10] Recent operation parameters are shown in Table 5-2. A flow sheet of the process is given in Figure 5-19.

In a recent year, the sintering machine was operated for 8,202 hours (availability 93.6%) and the FGD plant for 8,098 hours (operability 98.7%). In each month, the sintering machine was operated 28 to 30 days and was shut down for 1 to 3 days for maintenance. Although the FGD plant also required some servicing, such as cleaning the lime slurry tank, repairing the absorber and oxidizer lining, etc., most of the work could be done during the shutdown of the sintering machine. The high availability and operability indicate good performance of the plant.

The plant is only used for testing purposes. The treated gas is emitted from a stack without reheating, resulting in an appreciable plume.

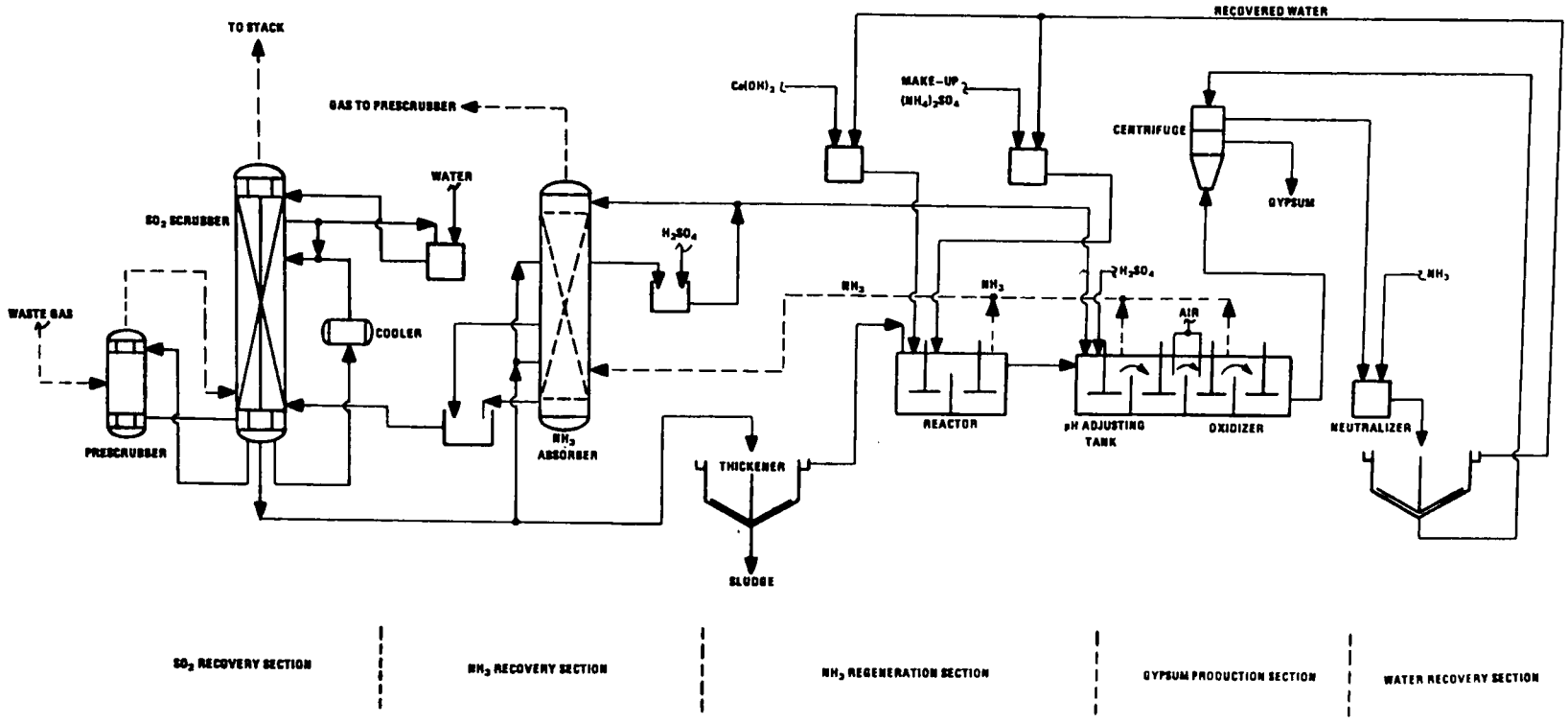

Figure 5-19. Flow sheet of Nippon Kokan ammonia-lime process.

5.7.3 Kureha Sodium Acetate Process

Kureha Chemical has continued tests of the sodium acetate-limestone process with a pilot plant (5,000 Nm^3/hr). The process has been improved by the substitution of lime for limestone. A flowsheet of the improved process is shown in Figure 5-20. SO_2 is absorbed in a sodium acetate liquor at a pH of 6.8-7.0. The liquor discharged from the scrubber is sent to a reactor in which it is oxidized by air and reacted with lime to precipitate gypsum. The presence of acetic acid promotes the reactions of sodium sulfate with lime to precipitate gypsum and regenerate sodium acetate, as shown below:

$$2CH_3COONa + SO_2 + H_2O = Na_2SO_3 + 2CH_3COOH \quad (5\text{-}10)$$

$$Na_2SO_3 + \tfrac{1}{2}O_2 = Na_2SO_4 \quad (5\text{-}11)$$

$$Ca(OH)_2 + 2CH_3COOH = (CH_3COO)_2Ca + 2H_2O \quad (5\text{-}12)$$

$$(CH_3COO)_2Ca + Na_2SO_4 + 2H_2O = 2CH_3COONa + CaSO_4 \cdot 2H_2O \quad (5\text{-}13)$$

By the substitution of lime for limestone, with the resulting higher pH of the scrubber liquor, the size of the scrubber and the reactor as well as the evaporation of acetic acid in the scrubber has been substantially reduced. No acetic acid recovery section is needed because the acid is sufficiently recovered in a mist eliminator. Air blown into the reaction tank eliminates the need for a separate oxidation tower. The overall FGD cost was considerably lowered even though lime is used.

Kureha claims that the total investment including land cost, etc. for a plant with a capacity of treating 810,000 Nm^3/hr of flue gas from a coal-fired boiler (250 MW equivalent, sulfur content of coal about 1.2%) will be about 3 billion yen.

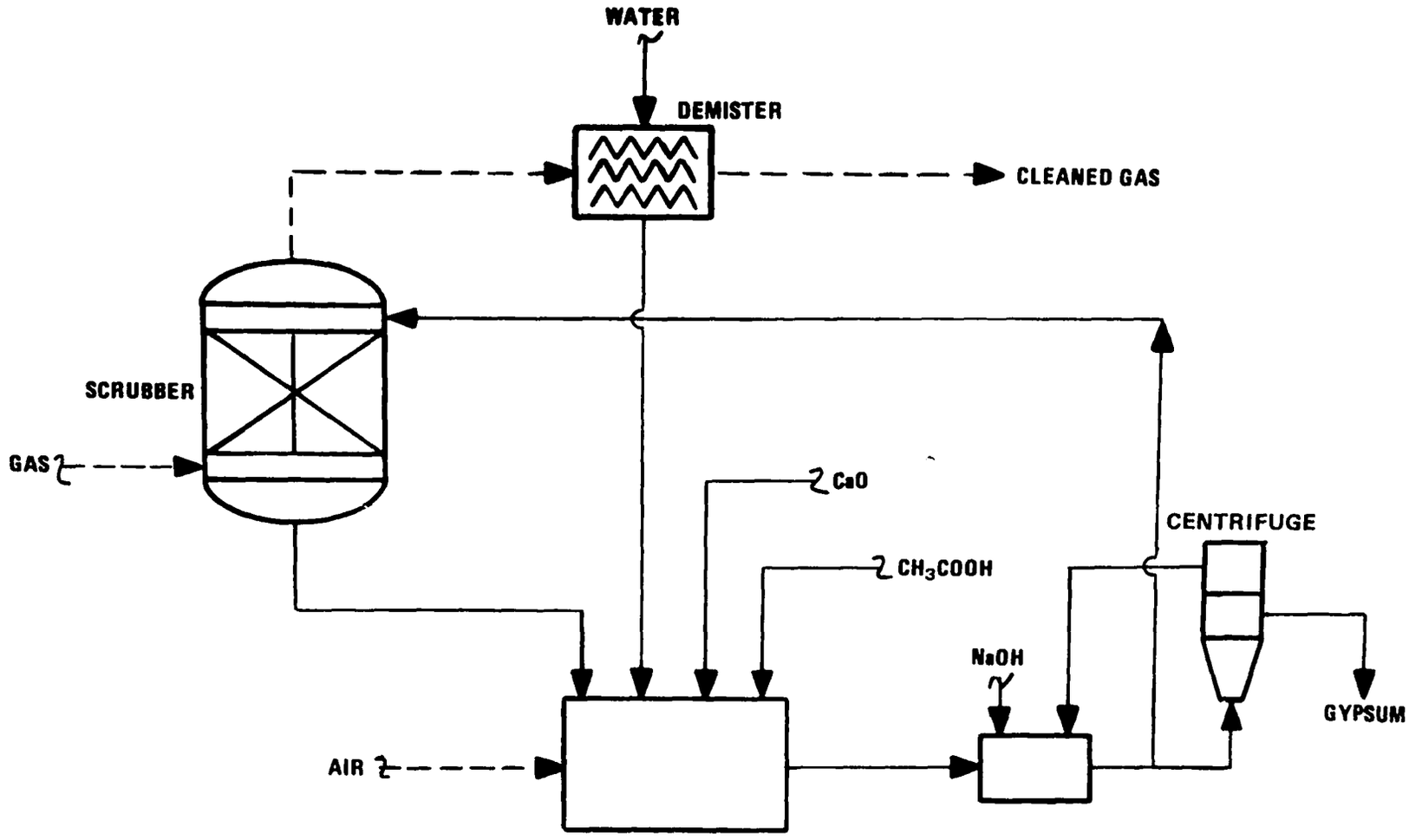

Figure 5-20. Simplified flow sheet of Kureha sodium acetate lime process.

The estimated requirements and products of the operation are as follows: (in tons/hr)

$Ca(OH)_2$	2.34	NaOH	0.051	CH_3COOH	0.117
Steam	1.8	Water	66	Wastewater	9
Gypsum	5.07 (dry basis)				

About 99% of SO_2 can be removed without difficulty. Wastewater should be treated to remove acetic acid, which can be readily decomposed by a biological method used widely for wastewater treatment ("activated sludge").

Kureha conducted pilot plant tests with a coal-fired boiler flue gas (300 Nm^3/hr) before and after particulate removal by an electrostatic precipitator. No appreciable difference in process chemistry was observed in tests with a flue gas from an oil-fired boiler, except that a larger amount of chlorine accumulated in the scrubber liquor and that fly ash increased erosion. About 2% chlorine in the liquor was tolerable for the process.

The process can be used for simultaneous removal of SO_2 and NO_x by adding catalysts to the scrubbing liquor.

SECTION 6

REGENERABLE PROCESSES

6.1 GENERAL DESCRIPTION

6.1.1 Ammonia Scrubbing

Nippon Kokan has developed a process to by-produce ammonium sulfate from SO_2 in flue gas and ammonia in coke oven gas. Two commercial plants based on the process (Table 6-1) have been constructed. To diminish plume from the scrubber, which is a common problem with ammonia scrubbing processes, Nippon Kokan uses an after-burner to raise the temperature of the treated gas at its Fukuyama plant and a wet electrostatic precipitator for its Ogishima plant.

A small commercial plant to by-produce ammonium sulfate was completed by Kurabo Engineering for a fertilizer producer (Table 6-1). The plant has been operated smoothly but the oversupply of ammonium sulfate has made the process less attractive.

Two relatively small plants, with ammonia scrubbing, thermal decomposition of ammonium sulfate, and an IFP reactor to by-produce elemental sulfur, were constructed by Mitsubishi Heavy Industries and Toyo Engineering. Both had problems mainly with the decomposition step and were given up.

TABLE 6-1. FGD INSTALLATIONS BY-PRODUCING H_2SO_4, S AND $(NH_4)_2SO_4$

Process Developer	Absorbent	User	Plant Site	Capacity (1,000 Nm^3/hr)	Source of Gas	Inlet SO_2 (ppm)	Year of Completion	By-Product
Wellman-MKK	Na_2SO_3	Japan S.R.	Chiba	200	Industrial boiler	2,000	1971	H_2SO_4
"	"	Chubu Electric	Nishinagoya	620	Utility boiler	1,600	1973	"
"	"	Kashima Oil	Kashima	30	Claus furnace	11,000	1973	S
"	"	Japan S.R.	Yokkaichi	450	Industrial boiler	1,000	1973	H_2SO_4
"	"	Toyo Rayon	Nagoya	330	"	1,500	1974	"
"	"	J.N. Railways	Kawasaki	700	"	1,500	1975	"
"	"	Mitsubishi Chem.	Mizushima	600	"	1,500	1975	"
"	"	Kuraray	Okayama	410	"	1,500	1975	"
"	"	Shindaikyowa Oil	Yokkaichi	400	"	1,500	1975	"
"	"	Mitsubishi Chem.	Mizushima	628	"	1,500	1976	"
"	"	"	Kubosaki	530		1,500	1976	"
"	"	Tohoku Electric	Niigata	380	Utility boiler	1,000	1977	
Wellman-SCEC	"	Toa Nenryo	Kawasaki	67	Claus furnace	6,500	1971	S
"	"	Sumitomo Chem.	Sodegaura	360	Industrial boiler	1,550	1973	H_2SO_4
"	"	Toa Nenryo	Wakayama	17	Claus furnace	19,000	1974	S
"	"	Fuji Film	Fujinomiya	150	Industrial boiler	1,300	1974	SO_2
"	"	Sumitomo Chem.	Niihama	155	"	1,600	1975	H_2SO_4
"	"	"	Sodegaura	540	"	1,600	1975	"
Onahama-Tsukishima	MgO	Onahama Smelting	Onahama	84	Copper smelter	20,000	1972	
Mitsui-Chemico	"	Idemitsu Kosan	Chiba	500	Claus and boiler		1975	S
Mitsui Mining	"	Mitsui Mining	Hibi	80	H_2SO_4 plant	1,200	1971	H_2SO_4
"	ZnO	"	Kamioka	48	"	1,200	1972	"
"	"	"	Hikoshima	25			1972	"
Hachinohe Smelting	"	Hachinohe Smelting	Hachinohe	60	Sintering machine	2,400	1973	
Shell	CuO	Showa Y.S.	Yokkaichi	120	Industrial boiler	1,500	1973	S
Sumitomo H.I.	Carbon	Kansai Electric	Sakai	160	Utility boiler		1971	H_2SO_4
Hitachi Ltd.	"	Tokyo Electric	Kashima	420	"		1972	H_2SO_4**
"	"	Unitika	Oji	170	Industrial boiler	1,500	1975	H_2SO_4
Nippon Kokan	$(NH_4)_2SO_3$	Nippon Kokan	Fukuyama	760	Sintering plant	400	1976	$(NH_4)_2SO_4$
"	"	"	Ogishima	1,140	"	400	1977	"
Kursbo Engineering	$(NH_4)_2SO_4$	Taki Chemical	Befu	15	Industrial boiler	1,500	1976	"
MHI-IFP	$(NH_4)_2SO_3$	Maruzen Oil	Shimozu	42	Claus furnace		1974	S
TEC-IFP	"	Fuji Oil	Chiba	6	"		1974	"
Ube Industries		Ube Industries	Ube	110 x 2	Industrial boiler	1,000	1974	$(NH_4)_2SO_4$

* 1,000 Nm^3/hr = 590 scfm = 320 MW

** Reacted with limestone to produce gypsum.

Ube industries recently constructed two units to by-produce ammonium sulfate to be used for caprolactam production.

6.1.2 Wellman-Lord Process

Many Wellman-Lord process plants have been constructed by Mitsubishi Kakoki Kaisha (MKK) and Sumitomo Chemical Engineering Co. (SCEC) (Table 6-1). As is well known, the process uses sodium sulfite as the absorbent to obtain sodium bisulfite, which is heated to regenerate sodium sulfite and SO_2 in a concentrated form. Plant operation has been carried out smoothly.

The major problem with the process has been the formation of undesirable compounds: sodium sulfate, which results in the consumption of sodium, and polythionates, such as dithionate $Na_2S_4O_6$, which cause an increase in chemical oxygen demand (COD) of wastewater. The sulfate is formed by oxidation and the polythionates are produced mainly during the regeneration step. MKK has succeeded in decomposing the polythionates by ozone oxidation at a pH below 1.5, but the treatment increased capital and operating costs. SCEC has used an oxidation inhibitor to reduce the formation of the sulfate, but the inhibitor may make the decomposition of the polythionates more difficult.

Most of the Wellman-Lord process plants by-produce sulfuric acid, while three plants of oil companies by-produce elemental sulfur by feeding the recovered SO_2 into a Claus furnace.

6.1.3 Magnesium and Zinc Scrubbing

Three magnesium scrubbing plants have been constructed. These are the Onahama plant, Onahama Smelting Co., the Hibi plant, Mitsui Mining & Smelting, and the Chiba plant, Idemitsu Kosan (Table 6-1). By the magnesium scrubbing processes, SO_2 is absorbed in a magnesium hydroxide-sulfite slurry to by-produce magnesium sulfite, which is then filtered, dried, and calcined to regenerate the magnesium hydroxide and to recover SO_2 at about 7% concentration. The SO_2 is used for sulfuric acid production (Onahama plant and Hibi plant) or is charged to a Claus furnace to by-product elemental sulfur (Chiba plant).

The Onahama plant and the Hibi plant were shut down a few years ago and have since remained inoperative because of the overproduction of sulfuric acid and the large energy consumption for the drying and calcination. Both plants have been replaced by lime scrubbing plants to by-produce gypsum. Only the Chiba plant is in operation at present.

Zinc scrubbing has been used in three zinc smelters. At Kamioka and Hikoshima of Mitsui Mining and Smelting Co., it is used to treat the tail gas of sulfuric acid plants producing 48,000 and 25,000 Nm^3/hr, respectively. At Hachinohe Smelter, it is used to treat 60,000 Nm^3/hr of weak and fugitive gases from a sintering plant. All of the zinc scrubbing plants were contructed by MESCO, the Engineering Division of Mitsui Mining and Smelting Co.

ZnO-rich dust caught by cyclones and electrostatic precipitators at the smelters is used for the scrubbing. The by-product, zinc sulfite with a small amount of zinc sulfate,

can be treated in different ways. Until a few years ago, the sulfite was filtered, dried, and calcined to regenerate ZnO and to release concentrated SO_2 which was sent to the sulfuric acid plant. The process, however, requires a considerable amount of energy for the drying and calcination. In recent operation, zinc sulfite slurry is treated with sulfuric acid to produce concentrated SO_2 gas, which is sent to the acid plant, and to recover zinc sulfate liquor, which is used to prepare a feed slurry to the roaster or to produce refined zinc sulfate.

The zinc scrubbing is useful for zinc smelters but may not be for other plants because of the difficulty in obtaining zinc oxide and because of environmental considerations.

6.1.4 Sodium Sulfite By-Production

There are over 800 sodium scrubbing plants with an average capacity of treating 40,000 Nm^3/hr of flue gas. The processes by-produce mainly sodium sulfite and some sulfate.

The process is simple, the plant is easy to operate, and the plant cost is low, but demand for the sulfite is limited. In a number of plants the sulfite in solution is air-oxidized into sulfate which is used for glass production, etc. or is purged. Use of such sodium sulfite scrubbing plants will not increase much because of the oversupply of the by-products and the increase in the cost of sodium hydroxide, which is required for the process.

6.1.5 Shell Process

The SYS plant, which uses the Shell copper oxide process, has continued operation (Table 6-1). Tests for

simultaneous removal of NO_x by ammonia injection have been carried out (see Section 7).

6.1.6 Activated Carbon Process

Tokyo Electric Power has been operating an activated carbon process plant at Kashima (420,000 Nm^3/hr) to produce a weak sulfuric acid which is treated with limestone to produce good-quality gypsum.

Unitika Co. has constructed a carbon process plant to by-produce a stronger sulfuric acid.

The dry carbon process plant of Kansai Electric at Sakai, using a moving bed designed by Sumitomo Heavy Industry (former Sumitomo Shipbuilding), has been given up after 5 years of operation.

6.1.7 Operation Parameters of Major Plants

Table 6-2 shows operation parameters of major regenerable process plants. Most of the plants have over 92% operability. An exception is the SYS plant using the Shell process, which has been occasionally modified for improvement.

Investment costs for the sulfuric acid and sulfur by-producing plants excluding the Claus furnace range from $80-130/kW in battery limits at current prices.

Although most of the regenerable process plants as well as plants by other processes have achieved a high operability, not many new FGD plants will be constructed due to the oversupply of by-products.

TABLE 6-2. OPERATION DATA OF REGENERABLE PROCESS PLANTS

Process Developer	Nippon Kokan	Wellman-MKK	Wellman-SCEC	Mitsui-Chemico	Kureha	Shell*	TEPCO-Hitachi*
Absorbent	NH_3	NaOH	NaOH	MgO	NaOH	CuO	Carbon
By-product	$(NH_4)_2SO_4$	$SO_2 \rightarrow H_2SO_4$	$SO_2 \rightarrow H_2SO_4$	$SO_2 \rightarrow S$	Na_2SO_3	$SO_2 \rightarrow S$	$H_2SO_4 \rightarrow CaSO$
Plant owner	Nippon Kokan	Chubu Electric	Sumitomo Chemical	Idemitsu Kosan	Mitsui Toatsu	Showa Y.S.	Tokyo Electric
Plant site	Ogishima	Nishinagoya	Sodegaura	Chiba	Nagoya	Yokkaichi	Kashima
Fuel	Coke†	Oil	Oil	Oil	Oil	Oil	Oil
FGD capacity (1,000 Nm^3/hr)	1,120	620	370	460Δ	190	116	420
FGD capacity (MW)	(380)	220	130	(160)	65	38	150
Inlet SO_2 (ppm)	350	1,600	1,500	2,850	1,400	1,250	150
Inlet dust (mg/Nm^3)	50		100		200-300	Below 50	
Inlet gas temperature (°C)	120	140	160	185	170		130
Number of scrubbers in parallel	2	1		1		1#	
Prescrubber type	Spray			Venturi			
L/G (liters/Nm^3)	1.0						
Scrubber type	Screen	Sieve tray		Venturi	Packed	pp+	Packed
Liquor pH	6.0				6.5		
L/G (liters/Nm^3)	1.0	0.6			1.2		
Gas velocity (m/sec)	1.6	1.8			Below 2.0		
Outlet SO_2 (ppm)	10-20	120	Below 150	120	6	125	30
Outlet dust (mg/Nm^3)	10	35	Below 50			Below 50	
SO_2 removal efficiency (%)	94-97	92	Over 90	95		90	80
Mist eliminator type	Wet EP			Chemico			
Pressure drop (mmH_2O): Prescrubber							
Pressure drop (mmH_2O): Scrubber		400			165	200	630
Pressure drop (mmH_2O): Mist eliminator		50			40		
Pressure drop (mmH_2O): Total system	250	550		500∇	250	400-500∇	870
Wastewater purged (t/hr)	10	4	Some	0.1	Some	Some	13
Energy requirements (Design)††							
Pump (kW)		840		1,960		140	280
Fan (kW)		2,350		3,400		730	2,700
Total FGD system (kW)					560	870∇	3,245
Percent of power generated		1.5‡		3.4‡	0.9	2.3∇	2.2
Operability (%)	100	99.5	Over 95	98	100		92

† Iron ore sintering plant

Δ From oil burner and Claus furnace

* Dry process

\# Two reactors are used alternately for SO_2 absorption and regeneration

\+ Parallel passage reactor

∇ Excluding Claus furnace

‡ For pump and fan

†† Excluding steam requirements

6.2 NKK AMMONIA SCRUBBING PLANTS

6.2.1 Outline

Nippon Kokan Kabushiki Kaisha (NKK) recently completed two large FGD plants to treat flue gas from iron-ore sintering plants. By using ammonia in coke oven gas ammonium sulfate is produced as a by-product. One of these plants, the Ogishima plant, has a capacity of treating 1,120,000 Nm^3/hr of flue gas (370 MW equivalent) and the other, the Fukuyama plant, has a capacity of 760,000 Nm^3/hr (250 MW equivalent). The former has wet electrostatic precipitators (ESPs) after the scrubber which almost entirely eliminate the plume, while the latter has an after-burner to reheat the gas to 120°C and produces appreciable plume.

6.2.2 Ogishima Plant

Flowsheets of the flue gas treating system of the Ogishima plant are shown in Figures 6-1 and 6-2. The flue gas, 1,120,000 Nm^3/hr at 150°C, containing about 300 ppm SO_2 and about 500 mg/Nm^3 dust, is first treated by two trains of the FGD system, each of which has two ESPs to reduce dust to about 20 mg/Nm^3. The gas is then passed through a Ljungstrom type heat exchanger to be cooled to 90°C, and is then subjected to ammonia scrubbing to have over 90% of SO_2 removed. Next, the gas is passed through wet ESPs specially designed by NKK, heated in the heat exchanger to 110°C, and then discharged. The stack gas contains 2-5 mg/Nm^3 dust, about 10 ppm SO_2, and 2-20 ppm NH_3, and is virtually invisible. A very slight plume is observed when the NH_3 concentration exceeds 10 ppm.

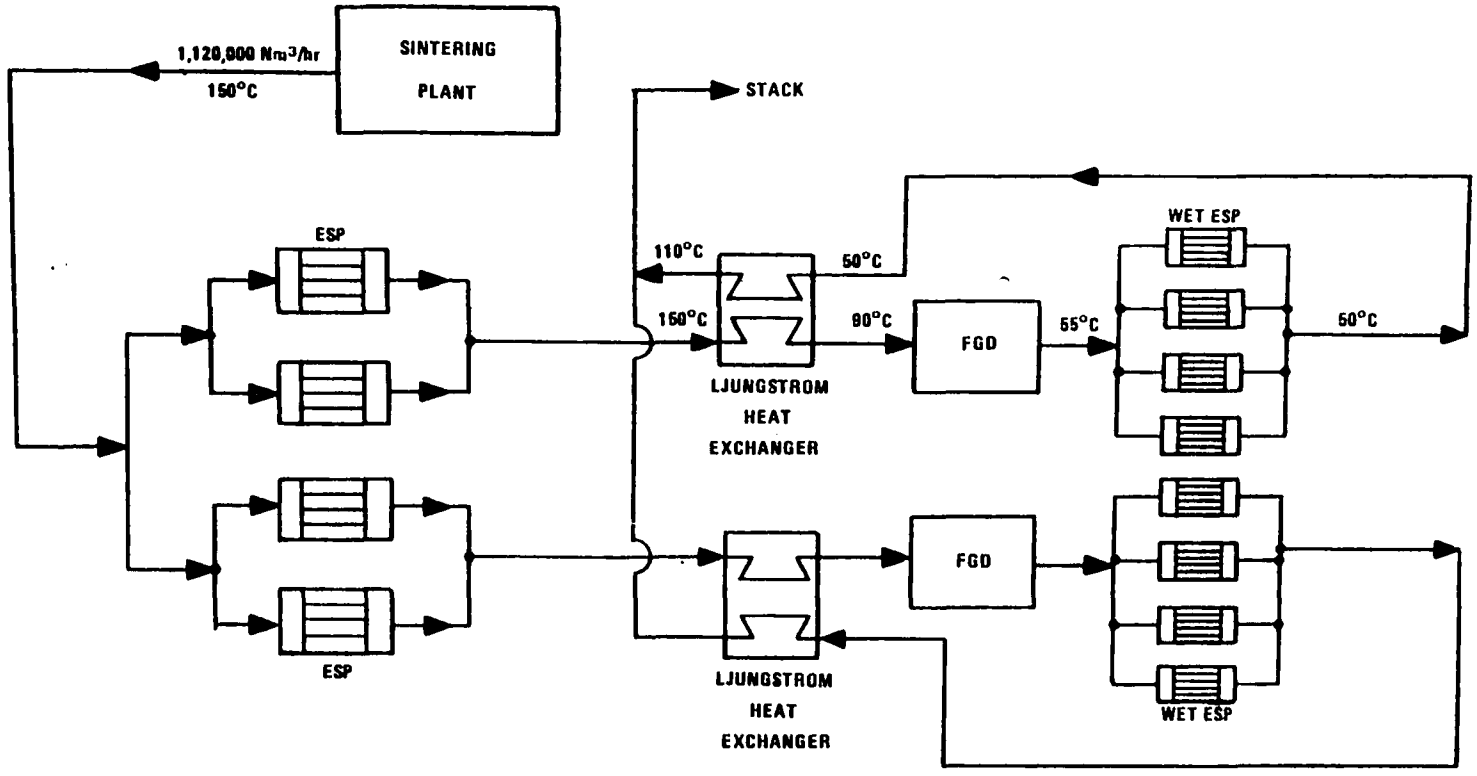

Figure 6-1. Flue gas treatment system (Ogishima plant, Nippon Kokan).

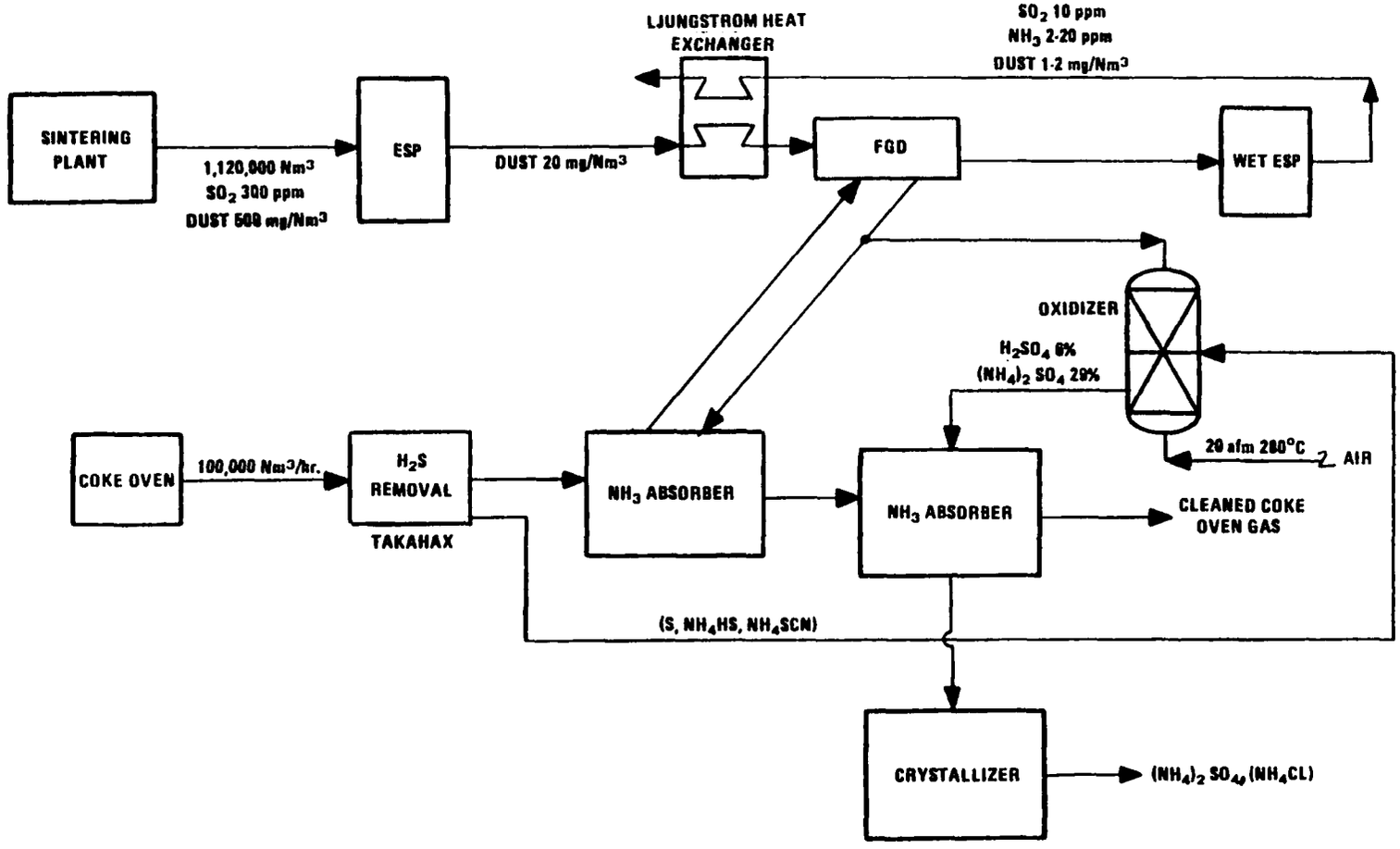

Figure 6-2. SO_2 and NH_3 absorption system (Ogishima plant, Nippon Kokan).

The scrubber has five stages of screens, as shown in Figure 6-3, and consists of three sections: the gas refining section (top), absorbing section (middle), and cooling section (bottom). Water is fed to the wet ESPs. The liquor discharged from the wet ESPs, with a specific gravity of 1.02 and a pH of 6.5, is first sent to the refining section. It flows through two stages of screens, forming liquid films that remove most of the SO_x and NH_3 which have not been absorbed in the absorbing section. The liquor is then sent to the cooling section and sprayed into the gas. The specific gravity increases to 1.10 and the pH is lowered to 5.8. The liquor is then sent to the absorbing section where there are three stages of screens. A portion of the liquor circulating in the absorbing section is sent to an ammonia absorber, where the liquor absorbs ammonia from coke oven gas. The liquor is then returned to the absorbing section. The coke oven gas is pretreated by the Takahax process to remove H_2S.

The liquor in the SO_2 absorbing section has a specific gravity of 1.18 and a pH of 5.9 and contains ammonium sulfate, bisulfate, sulfite, and bisulfite with small amounts of chloride and thiosulfate. The ratio of (sulfate + bisulfate): (sulfite + bisulfite):(other compounds) is approximately 70:25:5. The high oxidation ratio is due to the high O_2 concentration (over 15%) and low SO_2 concentration (300 ppm) in the flue gas. Ammonium chloride is derived from chlorine in the flue gas (about 50 ppm) and the thiosulfate mostly from H_2S.

A portion of the liquor is sent to an oxidizer together with the liquor discharged from the Takahax unit, which contains S, NH_4HS, and NH_4SCN. There it is oxidized by air at 280°C under 20 atmospheres of pressure. The product of the oxidation, a mixed solution of ammonium sulfate and sulfuric acid

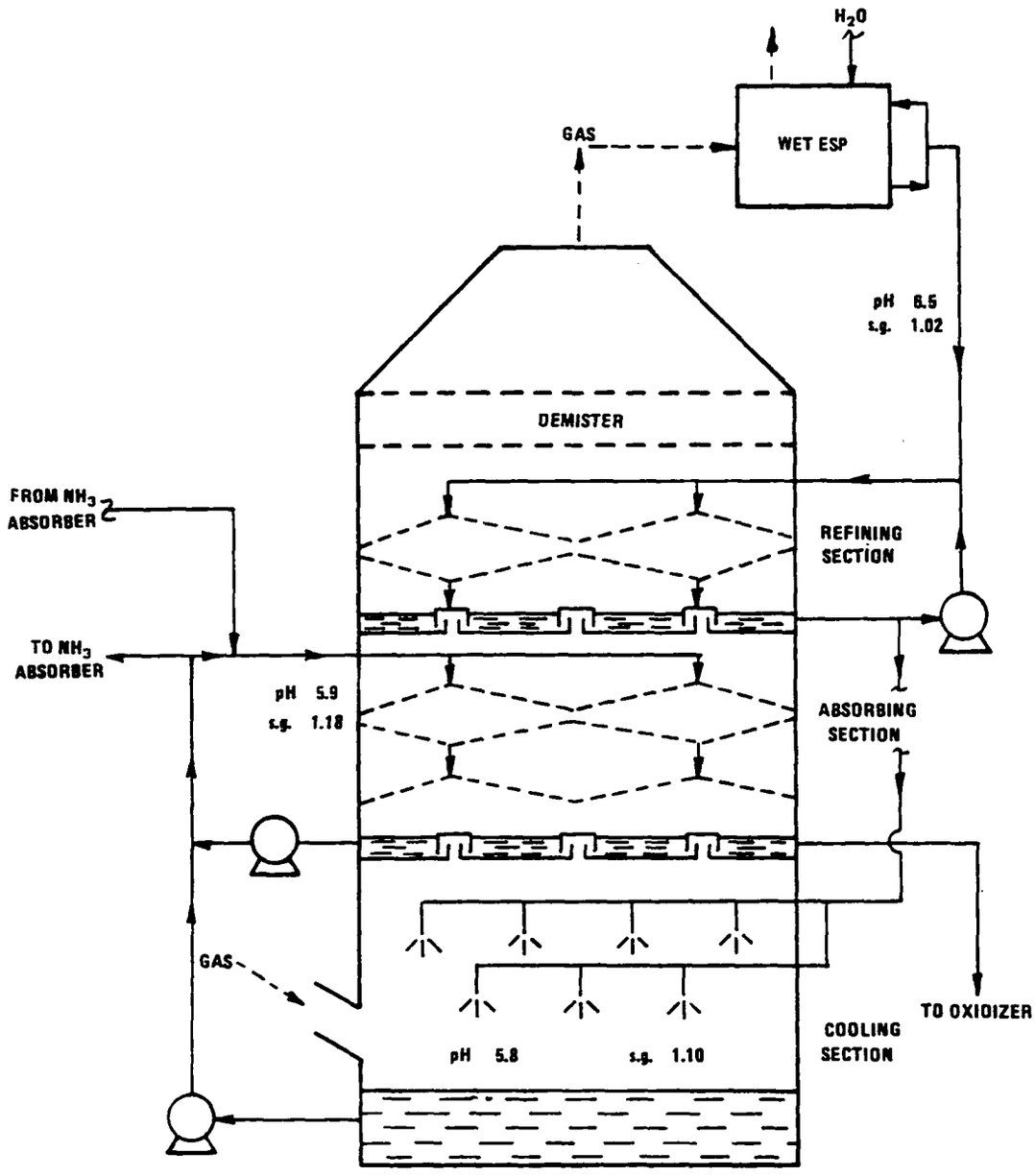

Figure 6-3. Scrubber and liquor flow (Ogishima plant, Nippon Kokan) (s.g.: specific gravity).

with a small amount of chloride, is sent to the second ammonia scrubber and then to a crystallizer, where solid ammonium sulfate (with a small amount of chloride) is produced.

Performance of Ogishima Plant--

Operation parameters of the Ogishima plant are shown in Table 6-2. The screen scrubber gives a high SO_2 removal efficiency with a low pressure drop. The L/G ratio is low as well, resulting in a relatively small power requirement. The operation hours in each month since the start-up of the plant in November 1976 are shown in Table 6-3.

TABLE 6-3. OPERATION HOURS SINCE START-UP

	Total hours (A)	Operation Hours Machine (B)	Operation Hours FGD (C)	B/A (%)	C/B (%)
Nov. 1976	720	401	401	55.7	100
Dec.	744	667	667	89.7	100
Jan. 1977	744	668	668	89.8	100
Feb.	672	527	527	78.4	100
Mar.	744	733	733	98.5	100
Apr.	720	681	681	94.6	100
May	744	704	704	94.6	100
June	720	684	684	95.0	100
July	744	697	697	93.7	100
Aug.	744	725	725	97.4	100
Sept.	720	702	702	97.5	100
TOTAL =	8,760	7,189	7,189	82.1	100

The sintering machine is stopped for a few days each month for maintenance. Maintenance work on the FGD system is done during that period. The sintering machine has never been

shut down because of problems with the FGD system. The plant has no flue gas bypass because the stringent SO_2 regulations do not allow sintering machines to be operated without FGD.

Economics--

The total FGD plant cost was ¥7.24 billion in 1976, excluding the Takahax unit but including ¥1.24 billion for the wet ESPs and ¥0.24 billion for the heat exchangers. The annualized cost including 7 years depreciation is ¥4.5 billion, which is equivalent to ¥1,950/ton of sintered ore or ¥562/ 1,000 Nm^3 of flue gas. The plant was designed for a capacity of 1,230,000 Nm^3/hr, which is equivalent to 410 MW. Therefore, the plant cost works out as $71/kW, of which the wet ESPs and heat exchangers account for $12 and $7.1, respectively. The annualized cost is equivalent to 7.6 mills/kWhr including 7 years depreciation.

The costs of the wet ESPs and heat exchangers are fairly high, but a calculation by NKK indicates that the annualized cost is less than the annualized cost for fuel to reheat flue gas to 110°C, which is required when wet ESPs and heat exchangers are not installed. The ESPs not only eliminate plume but also protect the heat exchanger from corrosion.

6.2.3 Fukuyama Plant

The Fukuyama plant uses one scrubber and has a capacity of treating 760,000 Nm^3/hr of flue gas from an iron-ore sintering machine. The process is similar to that of the Ogishima plant except that after FGD the flue gas is reheated by an after-burner to 120°C without wet ESPs or heat exchangers. A noticeable plume is formed. The operation data are shown in Table 6-4.

TABLE 6-4. OPERATION PARAMETERS OF FUKUYAMA PLANT

FGD capacity (1,000 Nm^3/hr)	760
Inlet SO_2 (ppm)	250
Inlet gas temperature (°C)	125
Inlet dust (mg/Nm^3)	30
L/G (liters/Nm^3)	1.5
Liquor pH	6.0
Gas velocity (m/sec)	1.2
Outlet SO_2 (ppm)	10 - 20
Pressure drop, total (mmH_2O)	230
Energy requirement, total (kW)	13

The monthly operation hours are smaller than those of the Ogishima plant due to the planned cutback of iron production. Maintenance of the FGD system can be performed during the shutdown of the sintering machine, and therefore, the FGD operability has been kept at 100%.

6.2.4 Evaluation

The Ogishima plant may be the world's first large-scale commercial ammonia scrubbing plant free from plume problems. The process has the following advantages: 1) It by-produces ammonium sulfate using SO_2 and NH_3 in waste gases; 2) Use of the wet ESP prevents plume formation and protects the heat exchanger from corrosion; 3) The screen type scrubber has a high SO_2 removal efficiency with a small pressure drop and a low L/G ratio, thus requiring small power consumption.

On the other hand, the process is not simple because of the use of coke oven gas containing H_2S. The wet ESP is fairly costly. Advantages, however, may compensate for the disadvantages.

6.3 NISHINAGOYA PLANT, CHUBU ELECTRIC (WELLMAN-MKK PROCESS)

6.3.1 Outline

The FGD plant at Nishinagoya station, Chubu Electric, was constructed by MKK (Mitsubishi Kakoki Kaisha) using the Wellman-Lord process to treat the gas from the No. 1 oil-fired boiler (220 MW). It has been in operation since 1972. SO_2 in the flue gas is absorbed in an Na_2SO_3 liquor to form $NaHSO_3$, which is heated to regenerate Na_2SO_3 and to produce concentrated SO_2 for sulfuric acid production. A flowsheet of the process is given in Figure 6-4. Details of the process are available in published literature.[10] Recent operation parameters are shown in Table 6-2. In addition to the energy requirements given in Table 6-2, 24 tons/hr of steam are required for regeneration (14 ton/hr for evaporation).

The process requires extensive wastewater treatment to remove Na_2SO_4 and polythionates, such as dithionate ($Na_4S_2O_6$), formed by oxidation of Na_2SO_3. A purge stream from the absorption-regeneration loop is first treated with ozone to decompose the polythionates, and is then cooled to 0°C to crystallize Na_2SO_4, which is centrifugally separated from the mother liquor. The liquor is returned to the scrubber system. Since the separated Na_2SO_4 contains a considerable amount of Na_2SO_3, which has a chemical oxygen demand (COD), it is treated with H_2SO_4 to convert the Na_2SO_3 to Na_2SO_4 and SO_2. The SO_2 is sent to the scrubber, and the product Na_2SO_4 solution is purged.

6.3.2 Sulfur Balance

The sulfur balance of the system is shown in Figure 6-5. One hundred parts of S with 6.3 parts of recycle S, both in the form of dilute SO_x, are fed to the absorber. The

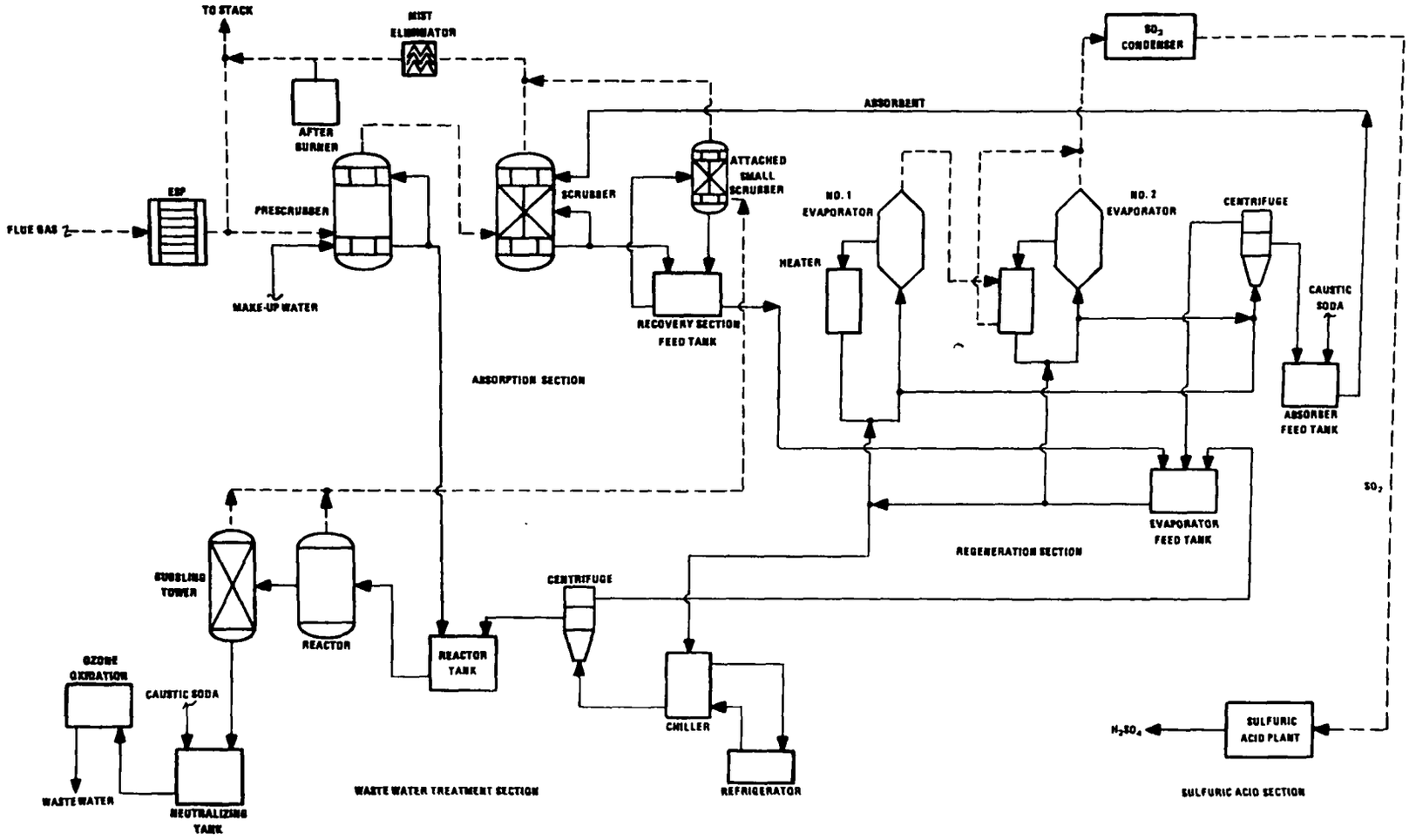

Figure 6-4. Flow sheet of the Wellman-MKK process (Nishinagoya Station, Chubu Electric Power).

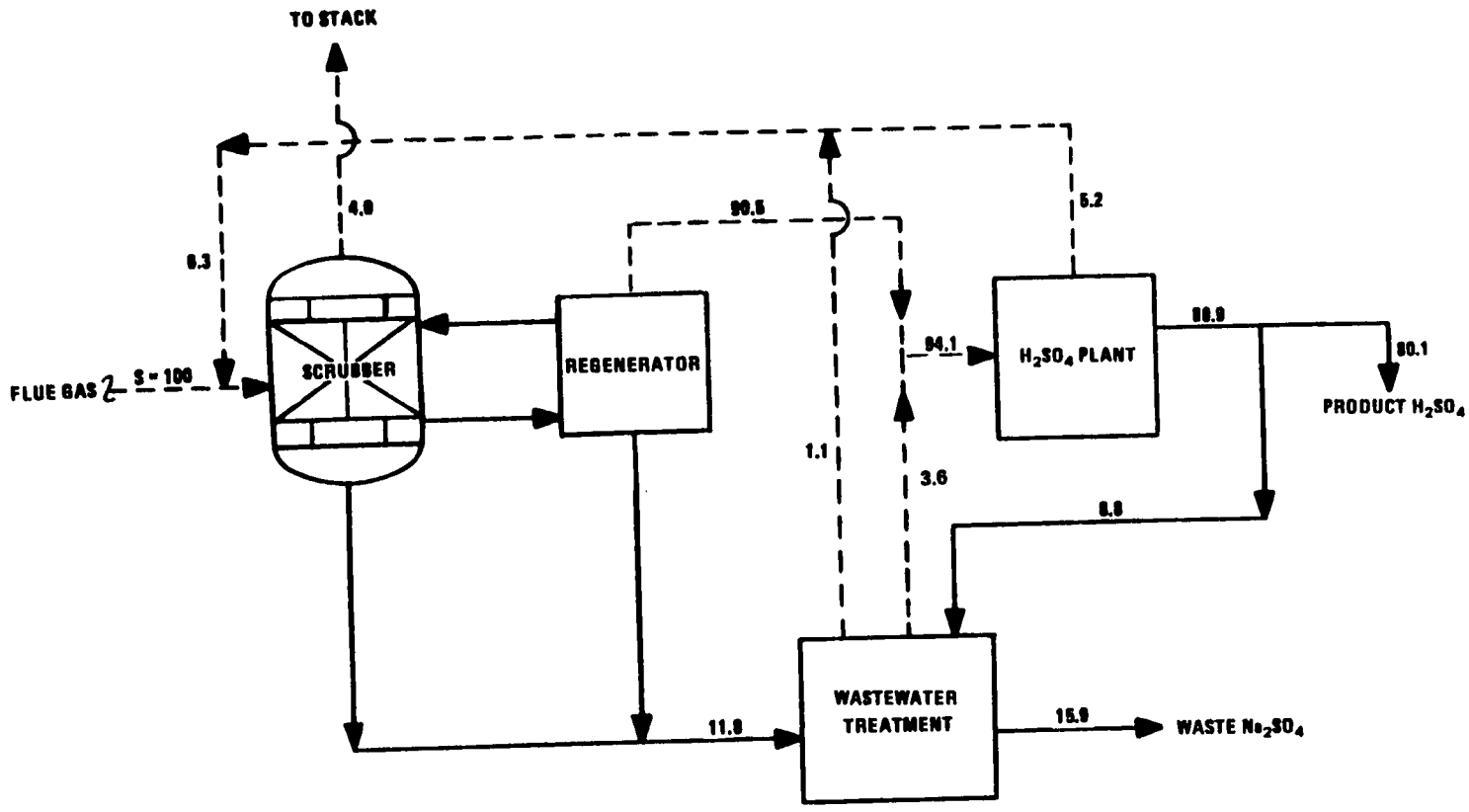

Figure 6-5. Sulfur balance of FGD system at Nishinagoya, Chubu Electric (Wellman-MKK process).

regenerator yields 90.5 parts of S in the form of concentrated SO_2, while 11.8 parts of S--mainly Na_2SO_4, some $Na_4S_2O_6$, and Na_2SO_3--are sent to the wastewater treatment system. Sulfuric acid (8.8 parts of S) is added to the wastewater treatment system to produce concentrated SO_2 (3.6 parts of S), which is sent to an H_2SO_4 plant, and dilute SO_2 (1.1 parts of S), which is returned to the absorber together with the H_2SO_4 plant tail gas (5.2 parts of S).

Thus, of the 100 parts of inlet S, 4.0 parts leave the scrubber unabsorbed, 80.1 parts are produced as H_2SO_4, and 15.9 parts are discarded in wastewater. Actually, the plant requires 7 tons/day of NaOH (as 100%) and by-produces 80 tons/day of H_2SO_4 (98%) at full load operation to treat 620,000 Nm^3/hr of flue gas containing 1,500 ppm SO_2.

6.3.3 Performance and Cost

The plant, including the sulfuric acid plant, is fully automated and is operated by 2 persons per shift with 5 persons for maintenance in the daytime. The operation hours of the boiler and FGD plant are shown in Table 6-5. The yearly average operability was 96.5%. Excluding March, when low-sulfur oil was used to start up the boiler after the annual maintenance work on it, average operability was 98.9%. Major problems involved the evaporator (regenerator).

The pH and the composition of the liquor regenerated to return to the scrubber are as follows:

pH	7.3 - 7.4		
Na_2SO_3	15 - 18%	Na_2SO_4	7 - 9%
$NaHSO_3$	1%	NaCl	0.6 - 0.7%

TABLE 6-5. YEARLY OPERATION OF NISHINAGOYA NO. 1 BOILER AND FGD PLANT

	Hours			Availability (%)		Opera-bility (C/B) (%)	Remarks
	Total (A)	Boiler oper-ation (B)	FGD oper-ation (C)	Boiler (B/A)	FGD C/A		
Oct. 1976	744	732	732	98.4	98.4	100	
Nov.	720	665	655	92.4	91.0	98.5	Maintenance of evaporator circulation pump
Dec.	744	744	740	100	99.5	99.5	Servicing of evaporator vacuum pump
Jan. 1977	744	339	339	45.6	45.6	100	Scheduled maintenance work on boiler
Feb.	672	0	0	0	0		Scheduled maintenance work on boiler
Mar.	744	744	501	67.3	48.5	72.1	Use of low-sulfur oil at boiler start-up
Apr.	720	710	710	98.6	98.6	100	
May.	744	738	738	99.2	99.2	100	
June	720	674	674	93.6	93.6	100	
July	744	744	744	100	100	100	
Aug.	744	680	680	91.4	91.4	100	
Sept.	720	720	717	100	99.6	99.6	Leakage of evaporator
TOTAL =	8,760	7,490	7,230	85.5	82.5	96.5	
(excluding March)	8,016	6,819	6,746	85.1	84.1	98.9	

The plant requires a high-quality corrosion resistant material in the regeneration section; 316 stainless steel has proved unsatisfactory. Another problem is the crystallization of Na_2SO_4 on the tubes of the heat exchanger resulting in the decrease of cooling efficiency. The tubes are occasionally washed with the scrubber liquor at 40°C to dissolve the Na_2SO_4.

The plant cost 1.6 billion yen in 1972. About 100 million yen was spent later for the wastewater treatment system.

6.3.4 Evaluation

The plant cost in 1972, *viz.*, 7,300 yen/kW, was unusually low. New plants by the Wellman-MKK process cost considerably more due to the need for a highly corrosion-resistant material and an extensive wastewater treatment system.

The Wellman process would suit a plant which has a good market for sulfuric acid or a Claus furnace to convert the recovered SO_2 to sulfur. Compared with a magnesium scrubbing process, the Wellman process has no calciner, but it has a regenerator, which also consumes much energy and often causes problems. The Wellman process requires an extensive wastewater treatment system while magnesium scrubbing normally produces no wastewater.

6.4 CHIBA PLANT, IDEMITSU KOSAN (MISTUI-CHEMICO MAGNESIUM) PROCESS

6.4.1 Process Description

The plant has a capacity of treating 500,000 Nm^3/hr of flue gas containing 3,000 ppm SO_2 from two industrial boilers burning 3%-sulfur oil and four Claus furnaces. It uses the Mitsui-Chemico magnesium scrubbing process. A flowsheet of the process is shown in Figure 6-6. The actual plant has a tower with two-stage venturi scrubbers.

The flue gas is passed through the 1st to the 2nd scrubber while $Mg(OH)_2$ is fed to the 2nd scrubber. Slurry from the second scrubber is sent to the 1st scrubber through a pH controller and a thickener. The pH of the slurry is 6.5 - 7 in the second scrubber, where the major component is $MgSO_3$. Since the slurry temperature is 68°C, the $MgSO_3$ is present mostly in the form of trihydrate (with a small crystal size of 2 - 5 microns), and partly in the form of hexahydrate (with much larger crystal size, up to about 100 microns). The pH is lower in the first scrubber, where the major compound is $Mg(HSO_3)_2$. A portion of the circulating slurry from the first scrubber is cooled to 40°C and sent to the pH controller, where it is treated with $Mg(OH)_2$ to adjust the pH to 6.5 - 7. The $Mg(HSO_3)_2$ then reacts with $Mg(OH)_2$ to form mostly $MgSO_3 \cdot 6H_2O$ with a large crystal size of 50 - 100 microns.

The slurry from the pH controller and the second scrubber is treated in a thickener to separate the hexahydrate and trihydrate by crystal size. The trihydrate is returned to the 1st scrubber. The hexahydrate discharged from the bottom of the thickener is filtered by a centrifugal separator (super-decantor), dried in a co-current dryer, and then calcined with

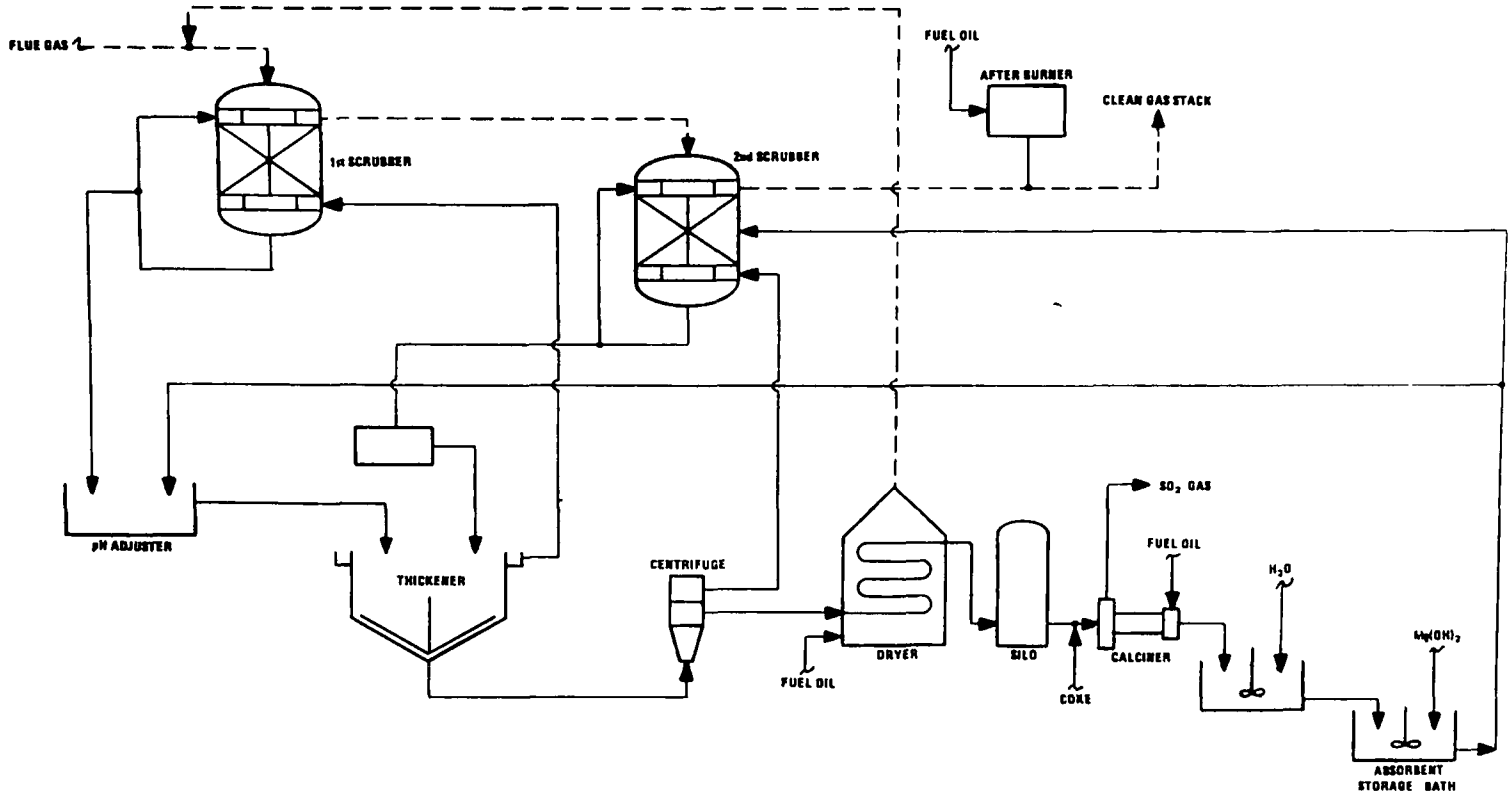

Figure 6-6. Flow sheet of Chiba plant, Idemitsu Kokan (Mitsui-Chemico magnesium process).

petroleum coke in a rotary kiln at about 900°C to regenerate MgO and to produce about 10% SO_2 gas. The SO_2 gas is sent to the Claus furnace to by-produce sulfur. The MgO is slaked to form a $Mg(OH)_2$ slurry, which is fed to the second absorber and the pH controller.

6.4.2 Performance

Operation parameters are shown in Table 6-2. About 95% of SO_2 is removed at a pressure drop of 500 mmH_2O. Since the reactivity of MgO gradually decreases by the repeated calcination, a portion of the MgO is replaced by fresh $Mg(OH)_2$ obtained from sea water. The old MgO is discarded. The requirement of MgO amounts to 300 tons/year. The operation hours of the boiler and scrubber in a recent year are shown in Table 6-6. Operation of the scrubbing section has been almost trouble-free except that pumps have had to be replaced occasionally. Since a stand-by pump is provided, replacement can be done without interfering with scrubber operation.

On the other hand, the regeneration steps sometimes encounter problems. During the first year after the start-up in August 1974, many troubles were encountered, including the wearing of the super-decantor, falling off of the refractories, and build-up of solids in the kiln. The problems have been reduced but the kiln still has to be shut down occasionally. The plant has a magnesium sulfite silo with a capacity to store the dried sulfite produced in 20 hours of operation, so that the other steps in the process can remain in operation while the kiln is shutdown for up to 20 hours. For longer shutdowns of the kiln, low-sulfur oil is burned to reduce the production rate of sulfite. The ratio of high-sulfur and low-sulfur oils consumed in a recent year is 80 to 20.

TABLE 6-6. OPERATION HOURS (CHIBA PLANT, IDEMITSU KOSAN. FGD TREATS FLUE GAS FROM BOILER AND CLAUS FURNACE.)

	Hours			Availability (%)		Opera-	
	Total (A)	Boiler oper- ation (B)	Scrubber op- eration (C)*	Boiler B/A	FGD C/A	bility (C/B) (%)	Remarks
Sept. 1976	720	720	720	100	100	100	
Oct.	744	442	744	59	100	100	
Nov.	720	528	720	73	100	100	Scheduled maintenance work on boiler (Claus furnaces were in operation)
Dec.	744	456	744	61	100	100	
Jan. 1977	744	744	744	100	100	100	
Feb.	672	672	672	100	100	100	
Mar.	744	744	744	100	100	100	
Apr.	720	720	720	100	100	100	
May	744	384	329	52	44	86	Scheduled maintenance work on boiler and FGD
June	720	336	301	47	42	90	
July	744	744	724	100	97	97	Accident of power source
Aug.	744	744	725	100	97	97	Cleaning of slurry nozzle
TOTAL =	8,760	6,514	7,887	74.3	90.0	(97.5)	

* Calciner sometimes stops while scrubber is in operation.

The life of the refractories is estimated at 3 years. The FGD plant normally purges no wastewater.

6.4.3 Evaluation

The process has been improved by the joint efforts of Idemitsu and Mitsui Miike, resulting in high operability. One of the important improvements is the use of the pH controller to produce well-grown crystals of $MgSO_3 \cdot 6H_2O$, which is easily filtered and dried. A patent has been applied for by Idemitsu and Mitsui Miike for the use of the pH controller. The calciner still has problems, but the operation experience will further reduce them.

The process is suitable for a refinery which has a Claus furnace to by-produce sulfur and for a plant which has a market for sulfuric acid. No-wastewater operation is another advantage for the process.

For application to a coal-fired boiler, the accumulation of chlorine and fly ash in the slurry may increase corrosion and erosion. It may be preferable to remove chlorine and fly ash by installing a prescrubber. Since the switching to a low-sulfur fuel is not as easy with coal as with oil, a larger magnesium sulfite silo may be needed.

6.5 OTHER MAJOR REGENERABLE PROCESSES

6.5.1 Sodium Scrubbing By-Producing Sodium Sulfite

Over 800 sodium scrubbing plants are in operation by-producing sodium sulfite and sulfate. Most of the plants use sodium sulfite liquor at pH 6 - 7 rather than NaOH as the

SO_2 absorbent because sodium hydroxide also absorbs CO_2. Absorbed SO_2 reacts with sodium sulfite to produce sodium bisulfite (reaction 6-1). The sodium bisulfite is then neutralized with sodium hydroxide to regenerate a sulfite solution (reaction 6-2), half of which is returned to the scrubber and the rest of which is sent to a concentration step. The by-product sulfite, in the form of either a concentrated solution or crystal, is sold to paper mills. Reactions in a sodium sulfite system are listed below:

$$Na_2SO_3 + SO_2 + H_2O = 2NaHSO_3 \qquad (6\text{-}1)$$

$$2NaHSO_3 + 2NaOH = 2Na_2SO_3 + 2H_2O \qquad (6\text{-}2)$$

As an example, operation parameters of the Nagoya plant, Mitsui Toatsu, which uses the Kureha process, are shown in Table 6-2. Over 99% of SO_2 in the flue gas is recovered with a low L/G ratio and a small power consumption.

In several plants, including those of Jujo Paper Co., a sodium hydroxide solution is sprayed in a reactor to obtain a powdery product consisting of sodium sulfite, sulfate, and carbonate (for example, 60% Na_2SO_3, 20% Na_2SO_4, and 20% Na_2CO_3) which is caught by a multicyclone, electrostatic precipitator, or baghouse. The product is usable for Kraft pulp production.

6.5.2 Shell Copper Oxide Process

The Yokkaichi plant, Showa Yokkaichi Sekiyu (SYS), using the Shell copper oxide process, has treated 120,000 Nm^3/hr of flue gas from an oil-fired industrial boiler to reduce SO_x from 1,250 ppm to 90 ppm. Operation parameters are shown in Table 6-2. The process has been described in published

literature.[10,21] Since the start-up in 1972, the plant has occasionally been shut down for modifications to improve operability. In February 1977, the acceptor (granular alumina impregnated with copper oxide) was renewed. The previous replacement was made three years ago. Since 1975 ammonia has been added to the reactor in order to simultaneously reduce NO_x, as will be described in Section 7.2.

The FGD plant was started up in May 1977 and shut down in June because of a boiler shutdown. Operation resumed in August and the SO_2 and NO_x removal efficiencies were kept at 80-85% and 40-45%, respectively. Higher removal efficiencies were not attempted as these values were sufficient to meet local and federal regulations.

6.5.3 Activated Carbon Processes

Tokyo Electric has been operating an activated carbon process plant at Kashima with a capacity of treating one-fourth the quantity of gas from a 600 MW oil-fired boiler. The SO_x adsorbed on the carbon is washed with water to by-produce a weak sulfuric acid, which is then treated with limestone to produce good-quality gypsum. The plant has been operated for over 5 years without any serious problem. Loss of carbon has been less than 2% per year. Although the process is costly, requiring large adsorbers with a large amount of carbon (about 500 tons), stable operation and small consumption of carbon are attractive features.

In 1975, Unitika Co. installed an activated carbon process plant at Uji with a capacity of treating 170,000 Nm^3/hr of flue gas from an industrial boiler burning 2.5%-sulfur oil. Dilute H_2SO_4 (5-7% concentration) is obtained by washing the

carbon with water. The dilute acide is then sprayed into the incoming flue gas at 170°C. The gas is then cooled to 80-90°C, and the acid is concentrated to about 60%. Unitika has used the acid in its own chemical plant. The process may be useful where there is a demand for the product acid, which is a little dirty and too dilute for general commercial uses.

The dry carbon process plant of Kansai Electric at Sakai, which had a capacity of treating 150,000 Nm^3/hr of flue gas from an oil-fired boiler by using a moving bed, has been given up after 5 years of operation. After adsorbing SO_2, the carbon was heated in a reducing atmosphere to recover concentrated SO_2 gas, which was then used for sulfuric acid production. The consumption of carbon in the process was too high. Activated carbon used for FGD in Japan is of high quality and ensures smooth operation but is expensive (800,000 yen/ton).

Tests have been made by Unitika and also by Sumitomo Heavy Industries on simultaneous removal of SO_x and NO_x using activated carbon (Section 7.2).

6.5.4 Ammonia Scrubbing by Ube Industries

Ube Industries has developed an ammonia scrubbing process and constructed two commercial units in 1977, each with a capacity of treating 120,000 Nm^3/hr of flue gas from an industrial boiler burning 2.5%-sulfur oil. Ammonium sulfite is by-produced and is used for caprolactum production. The total investment cost was nearly 1.2 billion yen.

Each FGD unit consists of a gas-cooler and two absorbers in series. About 20% solution of ammonium compounds, mainly sulfite with small amounts of bisulfite and sulfate, is formed

in the scrubber and concentrated in the gas-cooler to 35% solution. The solution is purified by filtration, absorption by activated carbon, and by chlating agent.

A plume problem, common to ammonia scrubbing processes, has been encountered. Tests are in progress to reduce the plume.

SECTION 7

SIMULTANEOUS REMOVAL OF SO_x AND NO_x

7.1 OUTLINE

7.1.1 Problems with NO_x and SO_x Removal Processes

NO_x removal from flue gas is increasing in importance with the growing consumption of fossil fuels, particularly coal. Selective catalytic reduction (SCR), in which NO_x is catalytically reacted with ammonia to produce N_2 and H_2O, has been considered most promising in Japan and has been applied to about 40 commercial plants. In those plants 85-95% of NO_x in flue gas is removed at 300-400°C with an NH_3/NO_x mole ratio of 1.0-1.2 and a space velocity of 5,000-10,000 hr^{-1}. Plant operation is easy with clean gas but not with dirty gases containing dust and SO_x because of the following problems:

1) Plugging of catalyst with dust.

2) Poisoning of catalyst by SO_x, especially by SO_3.

3) Formation of NH_4HSO_4 in the air heater resulting in corrosion and plugging.

4) Consumption of large amounts of ammonia.

5) Oxidation of a portion of SO_2 to SO_3 by some of the catalysts.

Selective noncatalytic reduction (SNR) which uses 1.5-2 moles NH_3 to 1 mole NO_x at 950-1,000°C has been tested in several large-scale plants. In those plants, 40-50% of NO_x has been removed at a relatively low cost but problems 3) and 4) are larger than in SCR.

Further problems, as shown below, are encountered when the ammonia reduction processes (dry processes) are used in combination with FGD (predominantly wet processes):

6) Large energy requirement for gas heating when SCR is applied after wet FGD.

7) Accumulation of NH_3 in the FGD scrubber liquor when SCR is applied ahead of FGD.

8) A large space requirement for the installation of both units.

Simultaneous SO_x and NO_x removal processes, either dry or wet, have been studied aiming at removal with less difficulty and lower cost than by the combinations of SO_x and NO_x removal processes.

7.1.2 Comparison of Simultaneous and Combined Removal Processes

Major simultaneous removal processes are classified in Table 7-1. The reaction temperatures and heat loss of simultaneous processes are shown schematically in Figure 7-1 (No. 6-No. 9) in comparison with the combined processes (No. 3-No. 5).

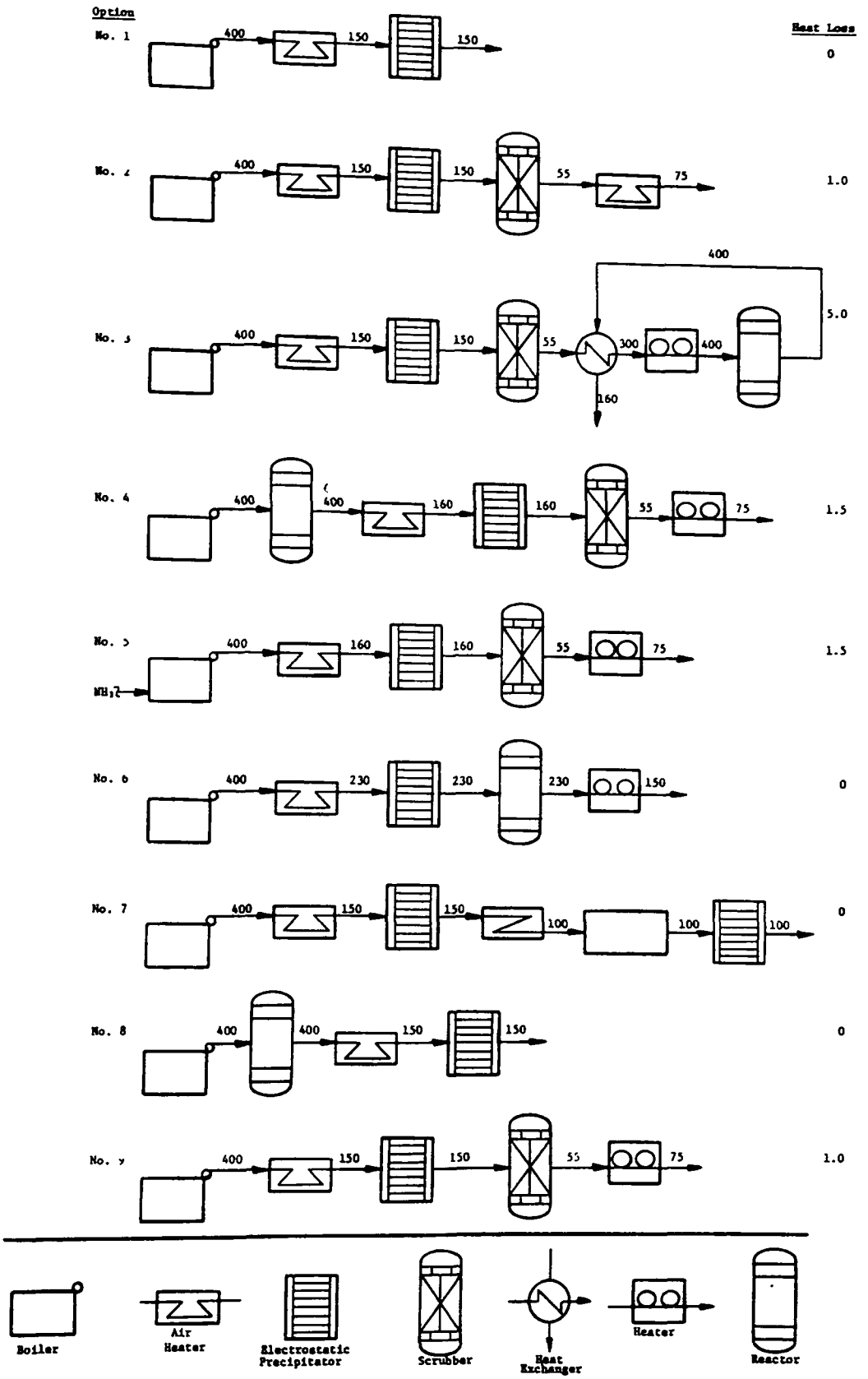

Figure 7-1. Combined and simultaneous removal systems - control strategy options (numbers show temperatures, °C).

TABLE 7-1. CLASSIFICATION OF SIMULTANEOUS REMOVAL PROCESSES

	Process	Process Developer
Dry	Metallic oxide	Shell, others
	Activated carbon	Unitika, Sumitomo Heavy Industries
	Electron beam	Ebara
Wet	Oxidation reduction	Sumitomo Metal-Fujikasui, IHI, MHI
	Reduction	Kureha, Chisso, Asahi Chemical
	Equimolecular absorption	Kawasaki H.I.

No. 1 of Figure 7-1 shows gas temperatures at regular boiler operation, which is taken as a standard (no heat loss). No. 2 illustrates the application of FGD with gas reheating from 55 to 75°C, which accounts for a heat loss of about 1% (equivalent to about 1% of boiler input).

No. 3 of Figure 7-1 shows the application of FGD ahead of SCR to clean the gas to avoid problems 1) and 2) mentioned in Section 7.1.1. The combination causes much heat loss (about 5%), and yet is not entirely free from problems 1), 2), and 3). Moreover, mist from FGD aggravates the problems. Use of a high-efficiency wet electrostatic precipitator after FGD (ahead of a heat exchanger) can solve the problems as has been done at the Chiba plant, Kawasaki Steel, which treats 800,000 Nm^3/hr flue gas from an iron-ore sintering plant. But such a system is very expensive and may not be applicable to other plants.

No. 4 in Figure 7-1 illustrates a recent trend in Japan to treat gas at 350-400°C from a boiler economizer by SCR and then by FGD. Catalysts based on TiO_2 resistant to SO_x have been produced. Present efforts are concentrated on developing reactors and catalysts free from dust plugging. Use of parallel

flow by a parallel passage reactor or use of a honeycomb, tube, or plate type catalyst seem promising. Nevertheless, problems 3) and 4) (in Section 7.1.1) remain unsolved and 7) is added. About 0.5% heat loss may be caused by problem 3) in addition to about 1% for reheating after FGD.

Selective noncatalytic reduction (No. 5 in Figure 7-1) gives a heat loss similar to No. 4, and has problems 3), 4), and 7) to a greater extent than No. 4. Both systems require a device to cope with the fluctuation of boiler load to maintain an optimum reaction temperature.

Systems No. 6-No. 9 show dry simultaneous removal processes which are expected to have no heat loss, although considerable energy is required for plant operation. All major dry processes developed so far in Japan use ammonia and are not free from problem 4). In addition, carbon and metal oxide processes have problems 1) and 3).

The wet simultaneous removal process (No. 9) has a heat loss similar to FGD but is expected to be free from all problems from 1) to 8). The process, however, has other problems to be solved, as will be mentioned later.

7.2 DRY SIMULTANEOUS REMOVAL USING ACTIVATED CARBON

7.2.1 Reactions of Activated Carbon

Activated carbon absorbs not only SO_x but also NO_x. The adsorption capacity is smaller at higher temperature and the adsorption rate of NO is much smaller than that of NO_2 and SO_2.[22] Moreover, regeneration of the carbon gives off NO_x-containing gas, which is useless and requires further treatment.

Thus, it is not practical to remove NO_x in a large amount of flue gas by using activated carbon.

Activated carbon impregnated with metal compounds serves as a catalyst for the following reaction above 100°C:

$$4NO + 4NH_3 + O_2 = 4N_2 + 6H_2O \qquad (7\text{-}1)$$

The effects of metal compounds are shown in Table 7-2.[22] Copper and vanadium have high catalytic reactivities at 100°C. Ammonium bromide also has a high catalytic reactivity at 100°C.[23] At temperatures below 200°C, however, the treatment of flue gas containing SO_x and NO_x with ammonia results in the formation of ammonium bisulfate, which deposits on the carbon and lowers the reactivity. Therefore, a temperature above 200°C is preferred. Since SO_x removal efficiency tends to be lowered at higher temperature (Figure 7-2), a temperature between 220 and 250°C is used for simultaneous removal by activated carbon. SO_2 adsorbed by the carbon is converted mainly to H_2SO_4 and partly to NH_4HSO_4, while the adsorbed NO_x is converted to N_2.

The process has the advantages of a dry simultaneous removal process, but has disadvantages as well. Because a moderate reaction temperature is used, two heat exchangers are needed for heat recovery, as shown in No. 6 of Figure 7-1. One is needed before the reactor and the other is needed after. Activated carbon is also costly (over 1 million yen per ton) and is needed in a large amount because of the small space velocity of 500-1,000 hr^{-1} required to attain over 90% NO_x and SO_x removal efficiencies. Some of the activated carbon is lost during the regeneration process. If the reacted carbon were washed with water, a weak solution of H_2SO_4, which is

TABLE 7-2. EFFECT OF ADDITION OF BASE METAL COMPOUNDS TO CARBON ON NO_x REDUCTION EFFICIENCY (2,000 ppm NO, 3,000 ppm NH_3, 3,000 hr^{-1} SV)

Metal	NO_x reduction efficiency, %		
	110°C	150°C	250°C
None	38	44	78
Ti		65	
Cr	55	70	95
Mn	50	67	88
Fe	52	67	90
Co	63	75	98
Ni		67	
Cu	91	99	100
V	80	88	100
Mo		70	
W		65	

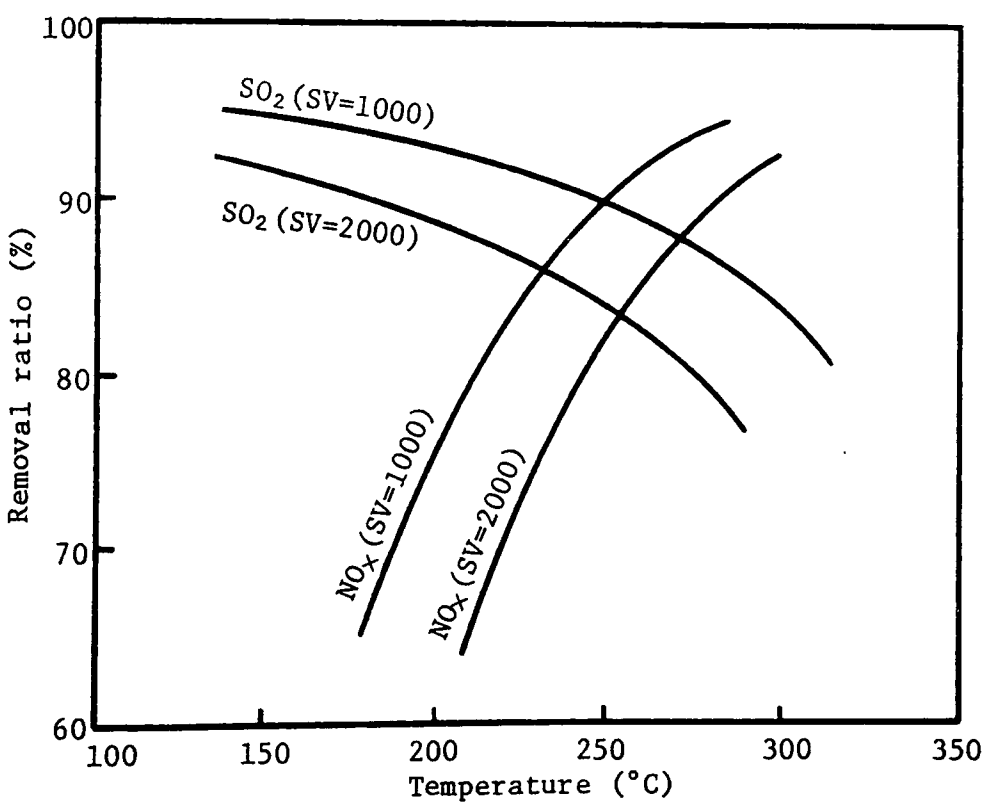

Figure 7-2. Efficiency of simultaneous removal by activated carbon and ammonia.

difficult to treat, would be produced. Moreover, wet carbon adsorbs SO_x but not NO_x. Therefore, the reacted carbon is usually regenerated by being heated at about 400°C to convert H_2SO_4 and NH_4HSO_4 to SO_2, N_2, NH_3, and H_2O. A considerable portion of the carbon is consumed by the thermal reactions as shown below:

$$H_2SO_4 + C = SO_2 + CO + H_2O \qquad (7\text{-}2)$$

$$NH_4HSO_4 + C = NH_3 + H_2O + SO_2 + CO \qquad (7\text{-}3)$$

The carbon consumption increases with the SO_x concentration of the gas and the SO_x removal efficiency. Ammonia consumption increases not only with NO_x but also with SO_2, because a portion of the SO_2 forms NH_4HSO_3. Therefore, the carbon process may be too costly for a gas containing over 500 ppm SO_x. Less expensive carbon with a high efficiency and yet without a tendency to burn is desired.

7.2.2 Unitika Activated Carbon Process

Since November 1975, Unitika Co. has operated a pilot plant with a capacity of treating 4,500 Nm^3/hr of flue gas from a glass melting furnace containing about 300 ppm SO_2, 200 ppm NO_x, and 5-10 mg/Nm^3 dust (Figure 7-3). The adsorption tower has four compartments, all of which have a fixed carbon bed. About 400 ppm NH_3 is added to the incoming flue gas at about 230°C and the gas mixture is led into three compartments. (The fourth compartment undergoes simultaneous regeneration.) About 90% of NO_x and SO_2 is removed. The carbon that has adsorbed SO_2 is regenerated by being heated to 350°C in an inert gas produced by incomplete combustion of propane. The inert gas contains about 1-1.5% CO, 9.5-10% CO_2, 0.8% H_2O, and 0.5% O_2. The recovered concentrated SO_2 gas can be used for sulfuric

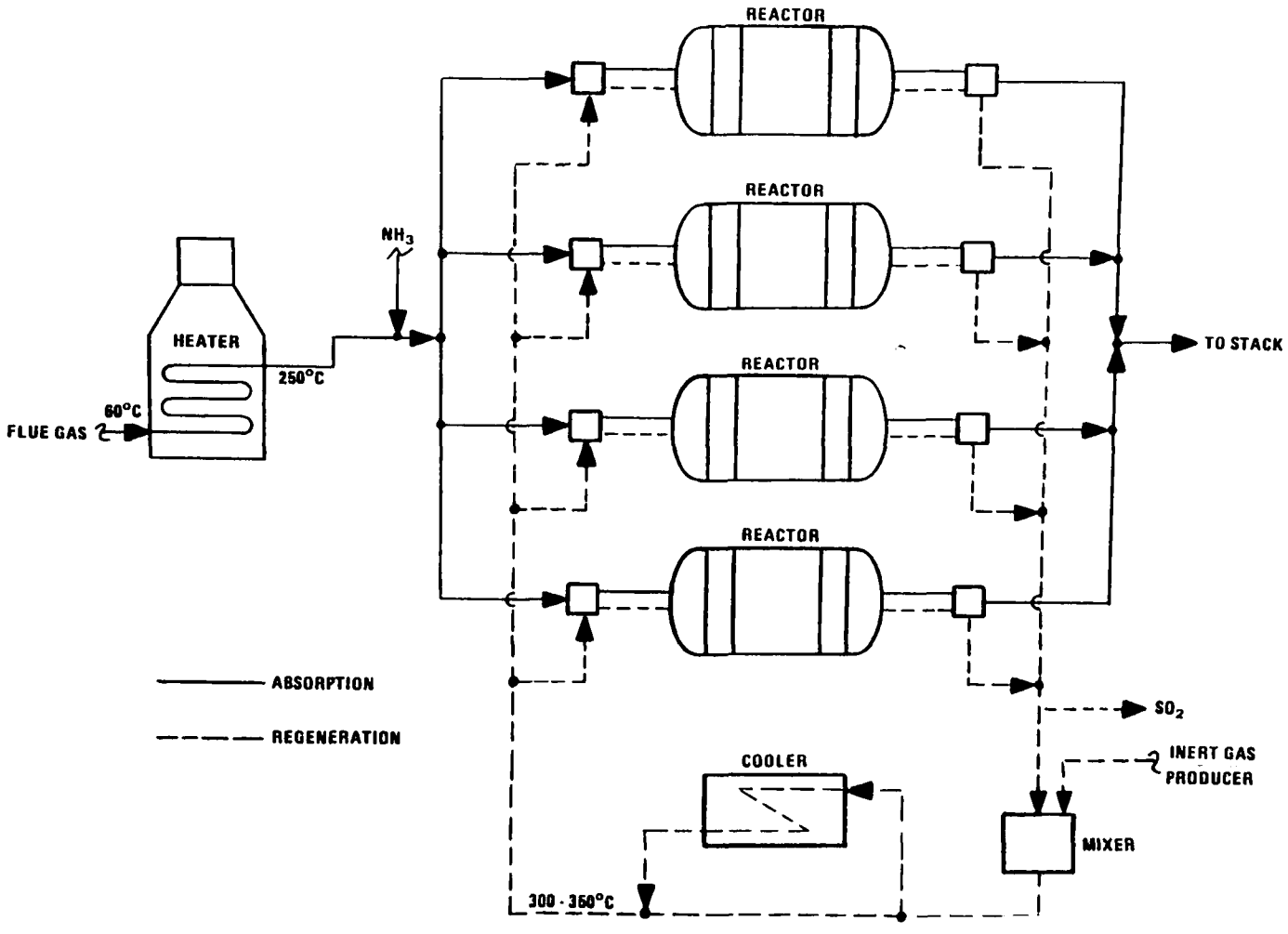

Figure 7-3. Flow sheet of Unitika process (Uji plant).

acid production or other purposes. Ammonium sulfate and bisulfate which tend to form on the carbon are decomposed to SO_2 and N_2 in the regeneration step.

The main design and operating parameters are as follows:

Tower height	17 m
Carbon bed thickness	1 m
Pressure drop	100 mmH_2O (reactor)
	250 mmH_2O (total)
Absorption time for 1 cycle	3 days
Regeneration time for 1 cycle	12 hours
SO_2 in gas from regeneration step	5-10%
Space velocity (SV)	700-1,500
Superficial gas velocity	0.1-0.2 m/sec

The activated carbon, produced by Takeda Chemical for the simultaneous removal, is in the form of cylinders with a 5 mm diameter and 8-10 mm length. Carbon consumption is estimated to be about 50% of the charge per year.

At an early stage of operation, when the reaction temperature was about 180°C, a large amount of ammonium bisulfate and sulfate formed on the carbon and caused plugging. Use of a 230°C temperature solved the problem.

Unitika's cost estimates for plants of three sizes, 30,000-500,000 Nm^3/hr (10-160 MW), are shown in Table 7-3. For the calculation, the carbon consumption was assumed to be 100% of the charge yearly.

TABLE 7-3. ESTIMATED CAPITAL AND OPERATING COST FOR SIMULTANEOUS REMOVAL BY ACTIVATED CARBON (1,000 ppm SO_x, 300 ppm NO_x)

	Capacity (1,000 Nm^3/hr)		
	30	100	500
Total plant cost (10^6 yen)	400	900	3,000
Major units	249	587	2,048
Accessories	41	87	252
H_2SO_4 plant	111	226	700
Operation cost (yen/kl oil)			
Depreciation and interest	3,700	2,890	2,440
Electric power	650	650	650
Fuel	2,500	2,500	2,500
Ammonia	1,200	1,200	1,200
Other (carbon, etc.)	1,500	1,400	1,400
Total	9,550	8,640	8,190

Since the process uses a fixed bed, carbon consumption is relatively small. The dust content of the gas at the pilot plant is very low and does not contaminate the catalyst. For dust-rich gas, a moving bed is needed which will increase the attrition of the carbon. For such a case, the carbon consumption might exceed 100% of the charge per year.

7.2.3 Activated Carbon Process by Sumitomo Heavy Industries

Sumitomo Heavy Industries (former Sumitomo Shipbuilding) tested a simultaneous removal process using a moving bed of activated carbon (Figure 7-4). Flue gases from an iron-ore sintering plant and also from an oil-fired boiler were used.

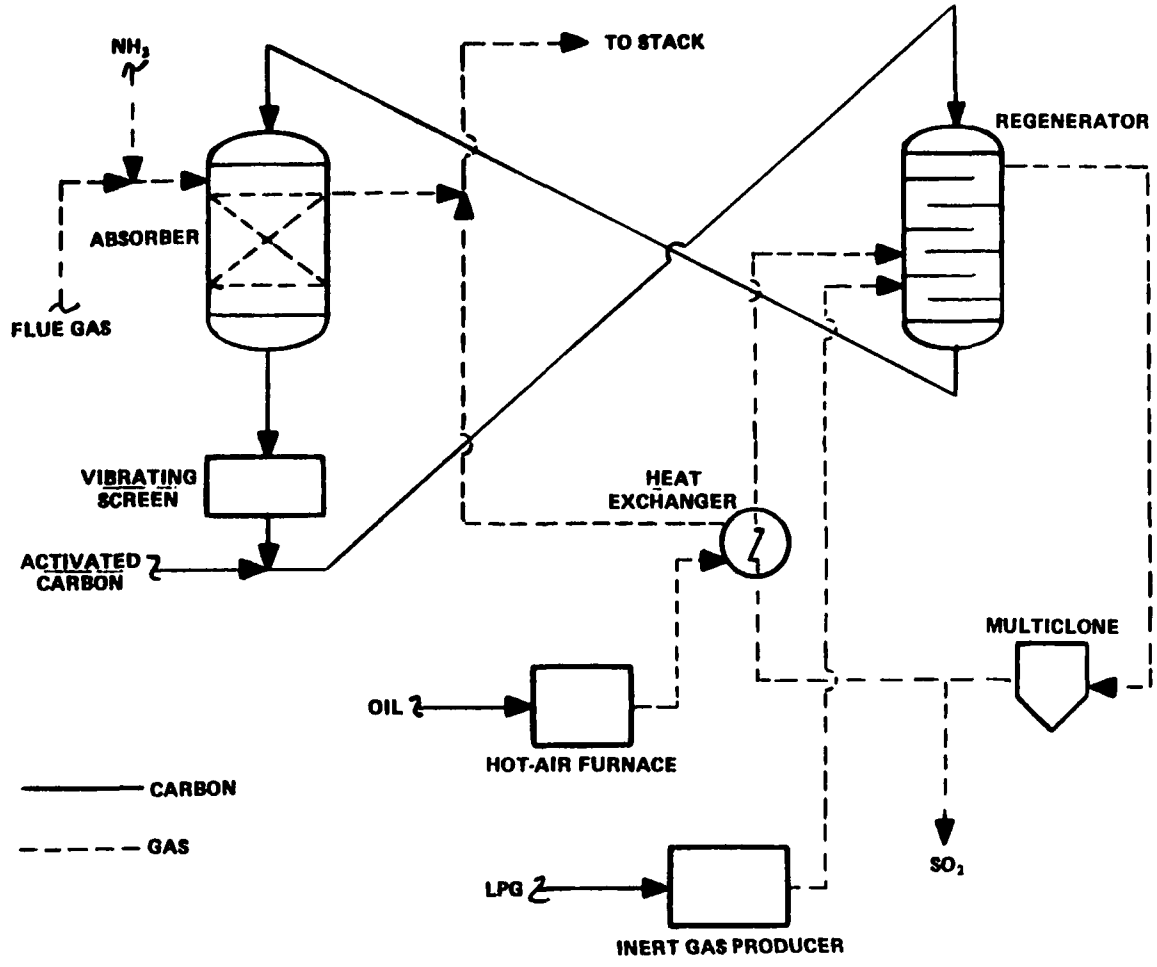

Figure 7-4. Flow sheet of Sumitomo activated carbon process.

Tests with a gas (2,000 Nm^3/hr) containing 500 ppm of SO_x, 200 ppm of NO_x and about 100 mg/Nm^3 of dust indicated that 95% of SO_x, 90% of NO_x and 60% of dust were removed by reaction at 230°C with a space velocity of 1,000 hr^{-1} and a total pressure drop of 150-200 mmH_2O. The carbon discharged from the reactor at 230°C containing SO_3 and NH_4HSO_4 was heated in an inert gas to produce concentrated SO_2. The inert gas contains 1.5% CO, 12.5% CO_2, 0.05% O_2, and 0.8% H_2. The ammonium bisulfate was decomposed to SO_2, N_2, NH_3 and H_2O.

The operation was carried out fairly smoothly but the consumption of carbon was fairly high; the consumption was due both to attrition and to chemical consumption.

Sumitomo estimates that a plant with a capacity of treating flue gas from a 500 MW coal-fired boiler containing 500 ppm SO_2 and 600 ppm NO_x would cost about 5 billion yen plus about 2 billion yen for the initial charge of activated carbon. In addition, a hot electrostatic precipitator is needed. Roughly 3,000 tons/year of activated carbon, 3,100 kW of power, 1,050 kg/hr of NH_3, 470 kg/hr of LPG for inert gas production, and 1 ton/hr of steam would be consumed.

The plant cost is low but carbon consumption is very high. Since the consumption of activated carbon increases with the SO_2 concentration of flue gas, the process may only be useful for a gas with a relatively low SO_2 concentration, say below about 500 ppm. The SCR process using the moving bed tolerates about 200 mg/Nm^3 dust. An electrostatic precipitator, therefore, would be needed to treat flue gas from a coal-fired boiler.

7.3 OTHER DRY PROCESSES FOR SIMULTANEOUS REMOVAL

7.3.1 Shell Copper Oxide Process

The Shell process uses copper oxide supported on granular alumina placed in two parallel passage reactors. Originally the process was used for SO_x removal only. Flue gas at 400°C is introduced into one of the reactors, where SO_x reacts with copper oxide to form copper sulfate (reaction 7-4). Then hydrogen is introduced into the reactor to reduce the sulfate to metallic copper and to generate concentrated SO_2 which is used for sulfur or sulfuric acid production (reaction 7-5). The two reactors are used alternately for acceptance and regeneration. At the beginning of the acceptance flow, copper is oxidized by oxygen in flue gas before reacting with SO_2 (reaction 7-6). Prior to the introduction of flue gas or hydrogen, steam is introduced into the reactors to purge remaining gases and to prevent explosions.

$$CuO + SO_2 + \tfrac{1}{2}O_2 = CuSO_4 \qquad \text{(acceptance)} \qquad (7\text{-}4)$$

$$CuSO_4 + 2H_2 = Cu + SO_2 + 2H_2O \qquad \text{(regeneration)} \qquad (7\text{-}5)$$

$$Cu + \tfrac{1}{2}O_2 = CuO \qquad \text{(oxidation)} \qquad (7\text{-}6)$$

The Yokkaichi plant, Showa Yokkaichi Sekiyu (SYS), has treated flue gas (120,000 Nm^3/hr) from an oil-fired boiler since 1973, reducing SO_x from about 1,200 to 120 ppm. Since 1975 ammonia has been introduced into the reactor during the acceptance period, to reduce NO_x by using the CuO and $CuSO_4$ as the catalyst for the following selective reduction:

$$4NO + 4NH_3 + O_2 = 4N_2 + 6H_2O \qquad (7\text{-}7)$$

Performance of the reactor is shown in Figure 7-5.[24] At the beginning of acceptance, the copper is present as a metal which is not effective for the removal of either SO_x or NO_x. Reactor outlet SO_x concentration is lowered rapidly as copper is oxidized. Ammonia is injected as the oxidation proceeds. The SO_2 removal efficiency reaches a maximum in about 20 minutes and then decreases as most of CuO is converted to $CuSO_4$; while NO_x removal efficiency keeps increasing because $CuSO_4$ is a better catalyst than CuO. With an acceptance time of about 120 minutes, the overall removal efficiency reaches 88% for SO_x, and 50% for NO_x with an NH_3/NO mole ratio of 0.71 or 65% for NO_x with a ratio of 0.99.

The Yokkaichi plant has removed about 90% of SO_2 and 40% of NO_x to meet local regulations. Leak ammonia present in the treated gas is only about 1 ppm at 40% removal. Operability of the plant has not been high but has increased recently due to process improvements. Continuous operation has been achieved for the period July 1977 through May 1978.

The process has a desirable feature as a dry simultaneous removal process although it consumes considerable amounts of hydrogen and steam. Nearly 70% NO_x removal with about 90% SO_2 removal is achieved by using an NH_3/NO mole ratio of 0.99. To obtain a higher NO_x removal efficiency, some extra device may be needed. A prolonged acceptance time would increase the NO_x removal efficiency but would lower the SO_x removal efficiency, and the use of excessive ammonia would increase the leak ammonia.

The process may suit flue gas with a moderate SO_2 concentration. An SO_2-rich gas would require frequent switching between acceptance and regeneration, resulting in the

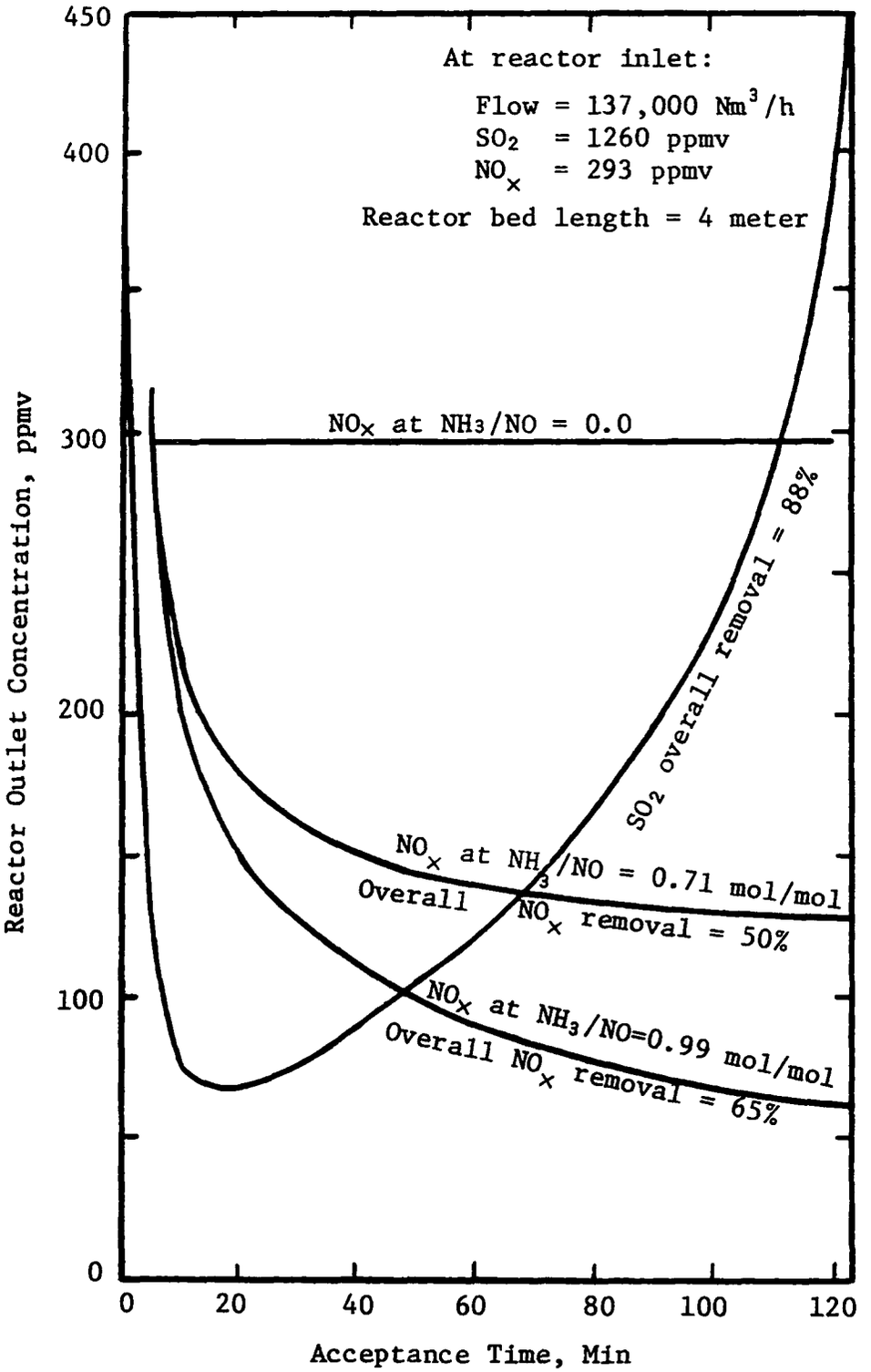

Figure 7-5. Performance of Shell FGD reactor at SYS. Instantaneous SO_2 and NO_x slip (92).

consumption of a large amount of hydrogen and steam and in a decrease in NO_x removal efficiency.

7.3.2 Ebara Electron Beam Radiation Process

The process has been developed by Ebara Manufacturing Co. jointly with the Japan Atomic Energy Research Institute. It will be tested by Nippon Steel in a pilot plant with a capacity of treating 3,000 Nm^3/hr flue gas. A flue gas at about 100°C to which a small amount of ammonia is added is exposed to electron beam radiation. A powdery product consisting of ammonium nitrate and sulfate is formed and is caught by an electrostatic precipitator. Over 90% of NO_x is removed with 70-80% of SO_2 (Figure 7-6).

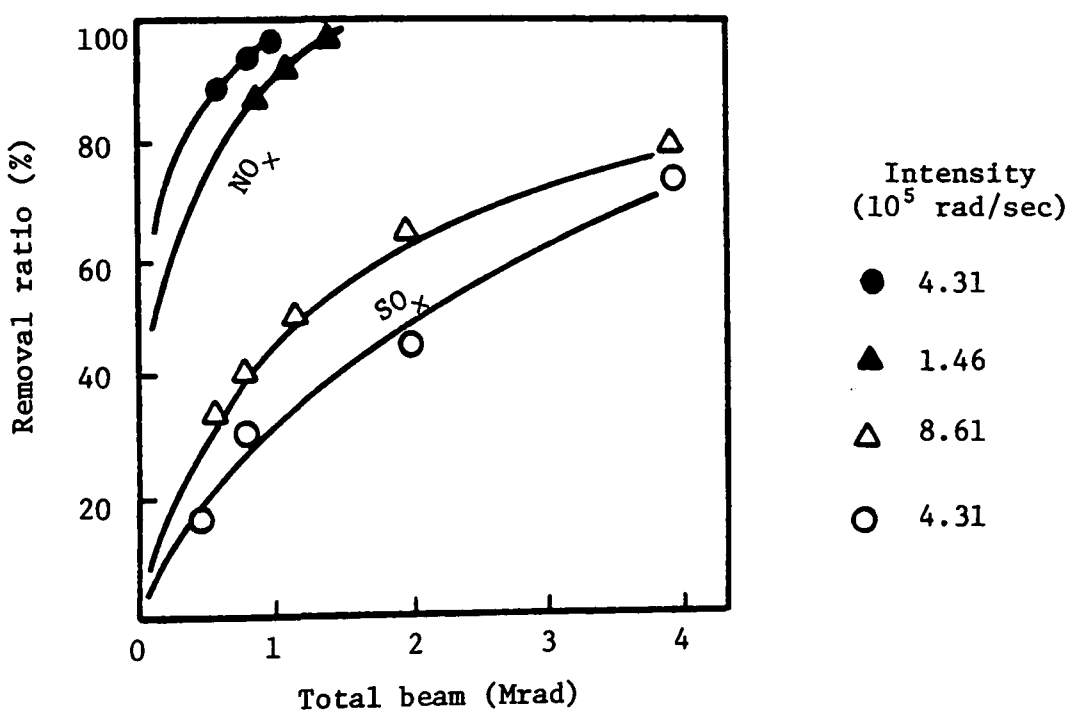

Figure 7-6. Simultaneous removal by electron beam radiator.[28]

Energy consumption is claimed to be no greater than in other simultaneous removal processes, but the investment cost seems high. Many large electron beam generators are needed for a large-scale plant because the electron beam has a limited range. Another drawback of the process is the requirement of cooling the gas to about 100°C, which is necessary because the removal efficiency is less at 150°C, the usual flue gas temperature. The process may suit gases produced at moderate rates that are relatively rich in NO_x and low in SO_2. The by-product may be useful for fertilizer. To treat flue gas from a coal-fired boiler, fly ash should be removed in advance to make the by-product ammonium salts useful for fertilizer.

7.4 WET SIMULTANEOUS REMOVAL PROCESSES

7.4.1 Outline

To remove NO_x by wet processes, sodium scrubbing and magnesium scrubbing (equimolecular absorption) have been applied in Japan in pilot and small commercial plants. These processes, however, are not suitable for large plants because they by-produce sodium and magnesium nitrates, which have little use.

For large-scale application, NO_x should be converted to N_2 or NH_3. This can be achieved by using the reducing effect of SO_2 in flue gas. Processes based on this principle are shown in Table 7-4. In the oxidation reduction process, NO, which is fairly inactive, is first oxidized to NO_2. It is then absorbed in a limestone slurry containing a small amount of catalyst. In the reduction process, NO is absorbed in a solution of a sodium or ammonium compound containing ferrous sulfate and a chelating compound such as EDTA (ethylenediamine tetraacetic acid), which forms an adduct with NO to promote absorption.

TABLE 7-4. MAJOR WET SIMULTANEOUS REMOVAL PROCESSES

Process developer	Oxidizing (Complex) agent	Absorbent (Precipitant)	By-product	Plant capacity (Nm^3/hr)
Oxidation reduction process				
Mitsubishi H.I.	O_3	$CaCO_3$	Gypsum, NH_3	2,000
Ishikawajima H.I.	O_3	$CaCO_3$	Gypsum, N_2	5,000
Sumitomo-Fujikasui	ClO_2	$CaCO_3$	Gypsum, nitrate, N_2, chloride	500
Reduction process				
Chisso Engineering	EDTA, Fe^{2+}	NH_3	$(NH_4)_2SO_4$	500
Kureha Chemical	EDTA, Fe^{2+}	CH_3COONa CaO	Gypsum, NH_3, (N_2)	5,000
Asahi Chemical	EDTA, Fe^{2+},	NaOH $CaCO_3$	Gypsum, N_2	600

Various reactions occur in the scrubber liquor. Most of the absorbed NO_x forms an imidodisulfonate $NH(SO_3M)_2$ or a sulfamate NH_2SO_3M (M = NH_4, Na, or ½Ca) by reactions (7-8), (7-9) and (7-10).

$$2\ NO + 5\ SO_2 + 6MOH = 2NH(SO_3M)_2 + M_2SO_4 + 2H_2O \qquad (7\text{-}8)$$

$$2NO_2 + 7SO_2 + 10MOH = 2NH(SO_3M)_2 + 3M_2SO_4 + 4H_2O \qquad (7\text{-}9)$$

$$NH(SO_3M)_2 + H_2O = NH_2SO_3M + MHSO_4 \qquad (7\text{-}10)$$

Those equations indicate that 2.5 or 3.5 moles of SO_x are needed to each mole of NO or NO_2. Since a portion of SO_2 is oxidized by O_2 in the liquor, 3.5-4.5 moles of SO_2 are required to attain about 90% NO_x removal.

The imododisulfonate and sulfamate are decomposed in different ways depending on the process. In the Mitsubishi, Chisso, and Kureha processes, NH_3 or $(NH_4)_2SO_4$ is produced by

reactions (7-10) to (7-13), while in the Asahi and Ishikawajima processes, N_2 is formed by reactions (7-14) and (7-15).

$$NH_2SO_3M + MHSO_4 + H_2O = NH_4HSO_4 + M_2SO_4 \quad (7\text{-}11)$$

$$NH_4HSO_4 + NH_3 = (NH_4)_2SO_4 \quad (7\text{-}12)$$

$$NH_4HSO_4 + CaO = CaSO_4 + NH_3 + H_2O \quad (7\text{-}13)$$

$$2NH(SO_3M)_2 + \tfrac{1}{2}O_2 \xrightarrow{heat} 2M_2SO_4 + 2SO_2 + N_2 + H_2O \quad (7\text{-}14)$$

$$2NH_2SO_3M + 2M(OH)_2 + O_2 \xrightarrow{heat} N_2 + 2M_2SO_4 + 4H_2O \quad (7\text{-}15)$$

7.4.2 Oxidation Reduction Process

A simplified flowsheet of the Mitsubishi (MHI) and Ishikawajima (IHI) processes is shown in Figure 7-7. Flue gas to which ozone is added is treated in a system similar to the wet FGD system by a limestone slurry containing catalysts (small amounts of NaCL and $CuCl_2$ in the IHI process).[5] By using 1 mole ozone to 1 mole NO, about 90% of NO_x is removed together with over 95% of SO_2. An oxidation step of calcium sulfite is virtually unneeded because of the oxidizing effect of NO_2. A portion of the liquor from a gypsum centrifuge containing calcium imidodisulfonate and sulfamate, which are both water-soluble, is treated in different ways. In the MHI process, the compounds are hydralized to ammonium bisulfate, which is treated with lime to produce NH_3 and gypsum (reactions (7-10), (7-11), and (7-13)), while by the IHI process the liquor is evaporated and the solids are calcined to produce calcium sulfate and N_2 (reaction 7-15). IHI also has a process to by-product NH_3 in a way similar to that of MHI. Details of the processes are available in published literature.[25,27]

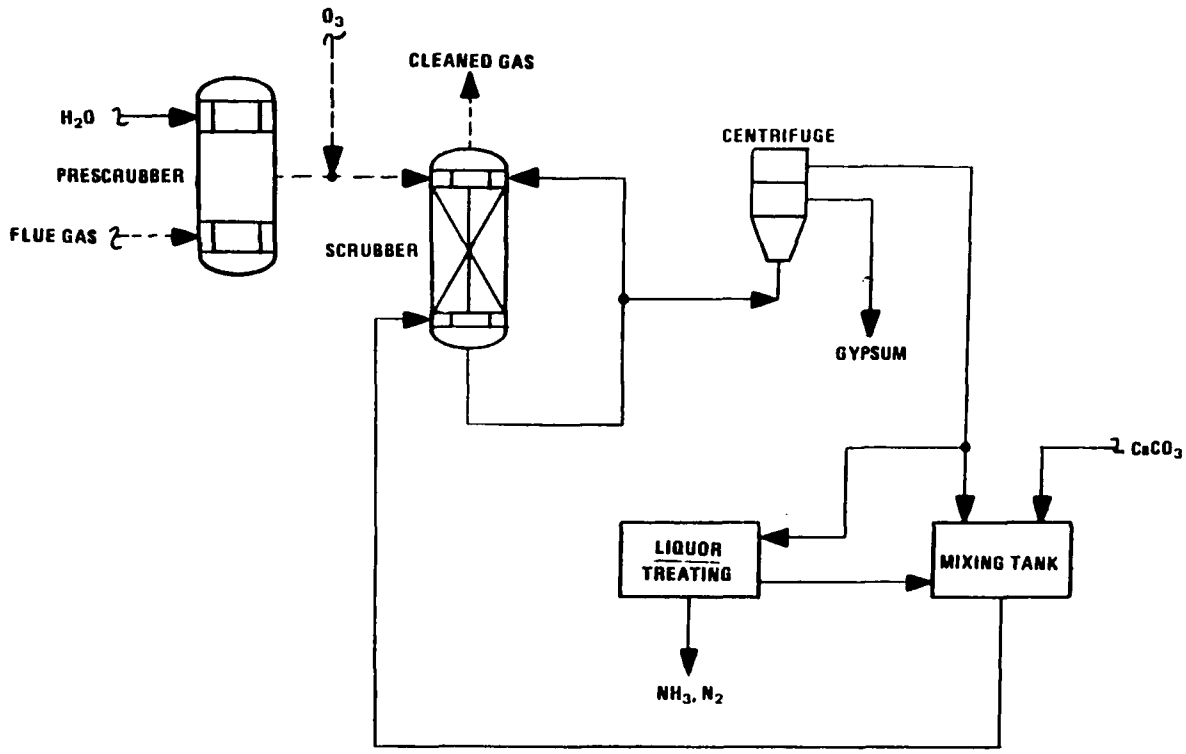

Figure 7-7. Simplified flow sheet of wet-limestone simultaneous removal process (oxidation reduction process).

The overall reactions of the two processes may be simply expressed by equations (7-16) and (7-17).

$$2NO_2 + 7SO_2 + 7CaO + 3H_2O = 7CaSO_4 + 2NH_3 \quad (7\text{-}16)$$

$$2NO_2 + 5SO_2 + 5CaO + \tfrac{1}{2}O_2 = 5CaSO_4 + N_2 \quad (7\text{-}17)$$

The equimolar proportion of ozone to NO required to achieve 90% removal results in the formation of a small amount of nitrate which would accumulate in the liquor. For 80% NO_x removal, less ozone is used and the nitrate formation is virtually avoided.

A great advantage of the processes is that they can be carried out in conventional wet lime/limestone scrubbing plants by adding a small liquor treatment system. On the other hand, a major drawback is the consumption of ozone. For flue gas containing more than 200 ppm NO, ozone oxidation is too expensive. The ammonia by-production process may be useful for flue gas from coal if the NO content is reduced to 250 ppm by combustion modification and to 150 ppm by injecting the by-product NH_3 into the boiler.

Sumitomo Metal jointly with Fujikasui has developed a process that uses ClO_2, which is less expensive than ozone. By that process, about half of NO_x in the gas is converted to N_2 while the rest goes into a scrubber liquor as calcium nitrate. In addition, the liquor contains a considerable amount of calcium chloride. The process may be useful if the by-product liquor, a mixture of calcium chloride and nitrate, can be used. One possible use is as an antifreeze agent for roads (the freezing point of water is substantially lowered by the calcium salts). Otherwise, the liquor may be treated with ammonium

sulfate to precipitate gypsum and to recover ammonium chloride and nitrate liquors which may be used as fertilizer.

Both investment and operation costs are roughly estimated at 40% more than FGD only for flue gas containing 150-200 ppm NO_x.

7.4.3 Reduction Processes

Reduction processes (Chisso, Kureha and Asahi) use a sulfite solution containing ferrous ion and EDTA, which promote the absorption of NO by forming an adduct. EDTA is fairly expensive (about $3,000/metric ton) but is consumed in a very small amount. It is often used for wastewater treatment and does not affect the environment. A small portion of the absorbed NO may be converted to N_2 by reaction (7-18) shown below, but a major portion forms an imidodisulfonate. A large portion of absorbed SO_2 forms a dithionate, $(NH_4)_2S_2O_6$ or $Na_2S_2O_6$, by the effect of ferrous ion and EDTA. Therefore, a decomposition step of those compounds is needed in addition to a standard FGD process.

The Chisso process uses ammonia scrubbing while the Kureha process uses a sodium acetate-lime double alkali system. In those processes imidodisulfonate and dithionate undergo hydrolysis at 120-140°C under pressure to form a bisulfate and sulfate by reactions (7-10), (7-11), (7-19) and (7-20). The overall reactions of the Chisso and Kureha processes may be expressed by equations (7-21) and (7-22), respectively.

$$Fe - EDTA\ NO + SO_3^{2-} \longrightarrow Fe - EDTA + SO_4^{2-} + \tfrac{1}{2}2N_2 \quad (7\text{-}18)$$

$$M_2S_2O_6 + H_2O + \tfrac{1}{2}O_2 = 2MHSO_4 \quad (7\text{-}19)$$

$$M_2S_2O_6 \xrightarrow{heat} M_2SO_4 + SO_2 \quad (7\text{-}20)$$

$$2NO + 5SO_2 + 8NH_3 + 8H_2O = 5(NH_4)_2SO_4 \quad (7\text{-}21)$$

$$2NO + 5SO_2 + 5CaO + 3H_2O = 5CaSO_4 + 2NH_3 \quad (7\text{-}22)$$

($M = Na^+$, NH^+, or $\frac{1}{2}Ca^{++}$.)

A simplified flow sheet of the Chisso process is shown in Figure 7-8. SO_x and NO_x are absorbed in an ammonia liquor containing EDTA and ferrous ion at pH 6. Since a considerable portion of EDTA woul d be decomposed at the above-mentioned hydrolysis (decomposition) step, most of the EDTA is separated ahead of this step. Separation is achieved by crystallization by cooling in an acidic liquor. This catalyst recovery step reduces the EDTA consumption but makes the process complex.

A simplified flow sheet of the Kureha process is shown in Figure 7-9. The process uses sodium acetate scrubbing and gypsum is precipitated from the liquor by lime addition. Ammonia formed by the hydrolysis is stripped by lime addition and is either recovered or decomposed. The process has no EDTA recovery step as does the Chisso process. A considerable amount of EDTA, therefore, may be decomposed at the hydrolysis step.

The Asahi process is a combination of a sodium-limestone FGD process and thermal decomposition of imidodisulfonate and dithionate (reactions (7-14) and (7-20)). SO_2 released by the decomposition is used to decompose Na_2SO_4 to $NaHSO_3$ and $CaSO_4$ in the same manner as in the above FGD process. The by-products of the Asahi process are gypsum and N_2 with a small amount of Na_2SO_4.

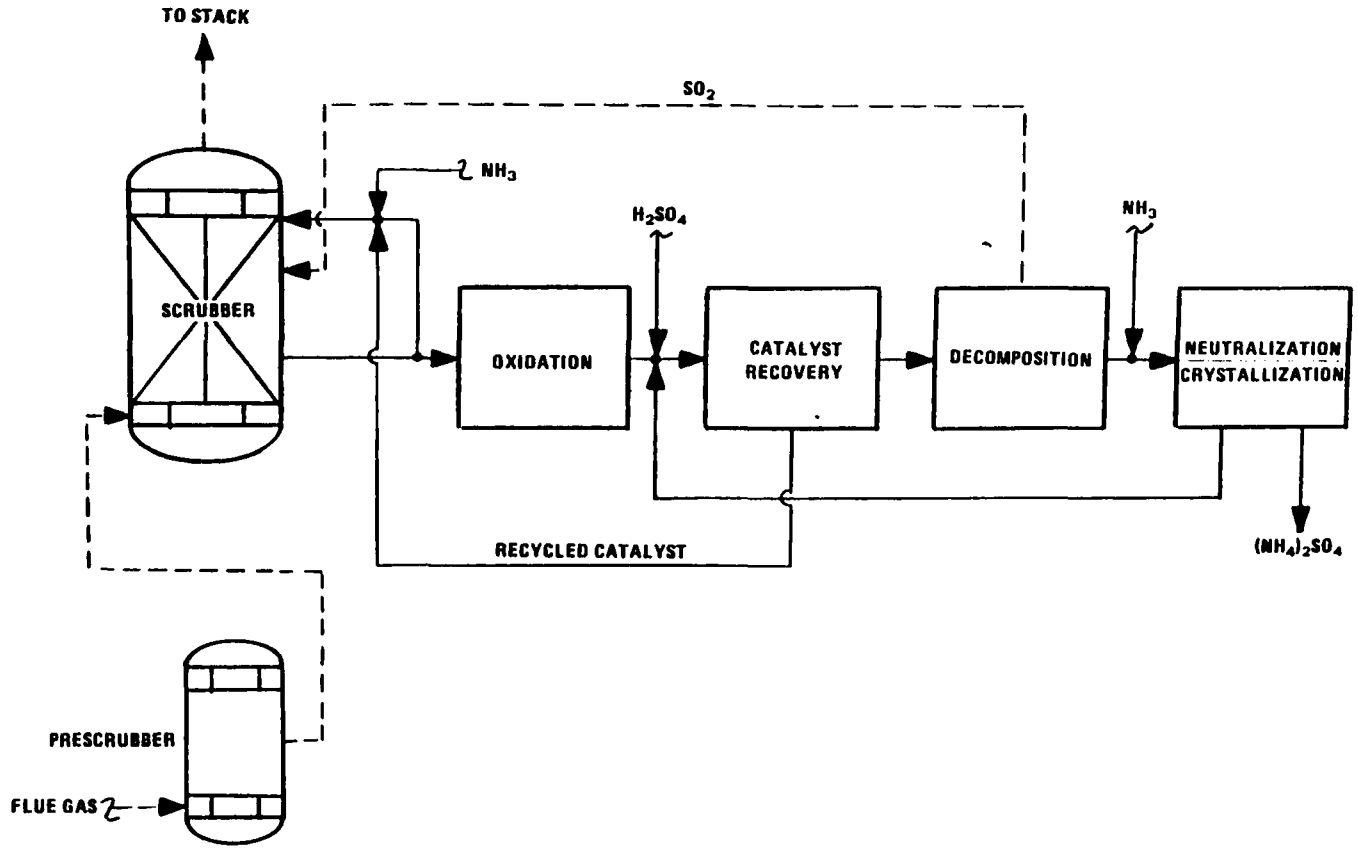

Figure 7-8. Flow sheet of Chisso process (CEC process).

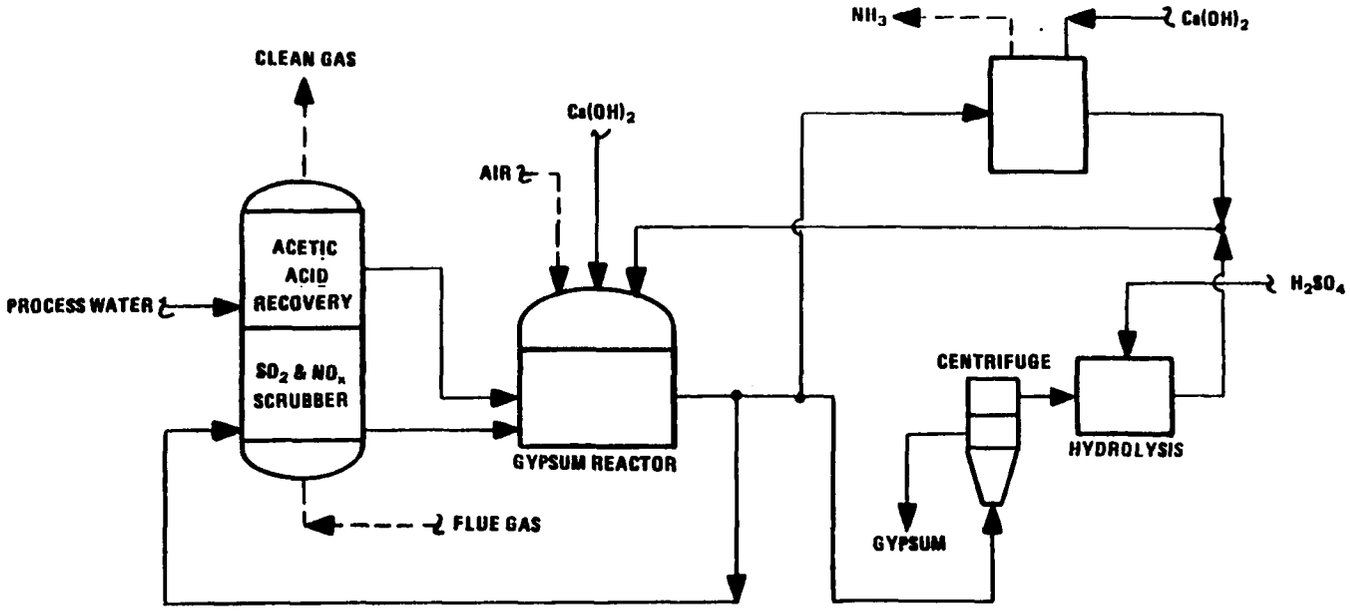

Figure 7-9. Flow sheet of Kureha process.

These reduction processes do not require an oxidizing agent and may suit NO_x-rich gases provided that more than about 4 moles of SO_2 are contained for each mole of NO for flue gas containing less than 4% O_2. With a higher O_2 concentration, a larger SO_2/NO_x mole ratio will be required in order to attain a high NO_x removal ratio. Since the absorption of NO occurs slowly and its solubility is small, the scrubber requires many stages with a heavy pressure drop and a large L/G ratio. Although 90% NO_x removal can be attained, 70-80% removal may be a more practical target. The costs of the investment as well as the operation are roughly estimated at 50% more than those for FGD only.

7.5 SUMMARY - APPLICABILITY OF SIMULTANEOUS REMOVAL PROCESSES

Relationships of SO_x and NO_x concentrations in gas to suitable processes for treatment are illustrated in Figure 7-10. Wet simultaneous removal processes suit a gas rich in SO_2 and relatively low in NO_x because an SO_2/NO_x mole ratio of over 4 is required to achieve 90% NO_x removal. Moreover, equipment required to convert FGD units for NO_x removal are smaller and less costly with a low NO_x concentration. Application of the oxidation-reduction process may be limited to gases containing less than 200 ppm of NO because of the cost of the oxidizing agent. Reduction processes should be used for gases with relatively high NO_x concentrations. Although 90% NO_x removal can be achieved by the wet processes, 70-80% removal may be more practical. Ninety percent removal requires a large L/G ratio or an excessive amount of oxidizing agent, which tends to form a hard-to-treat nitrate.

On the other hand, dry simultaneous processes suit gases with a relatively small SO_x/NO_x ratio for the following reasons:

1) For the carbon process, carbon consumption increases with SO_x concentration.

2) For the electron beam process, SO_x removal is much more difficult than NO_x removal.

3) For the Shell process, a high SO_x concentration increases hydrogen and steam consumption and tends to lower NO_x removal efficiency.

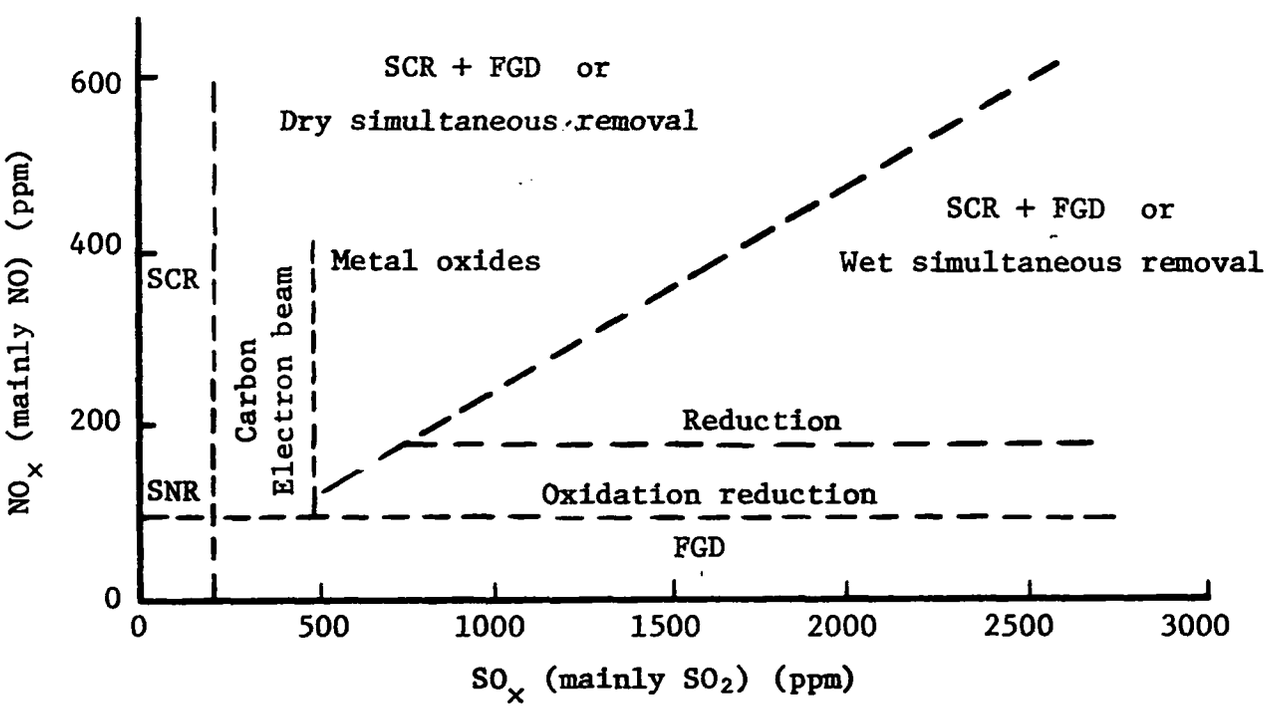

Figure 7-10. Gas composition and suitable processes.
(SCR: Selective catalytic reduction)
(SNR: Selective non-catalytic reduction)

Use of the carbon and electron beam processes may be restricted to gases containing less than about 500 ppm SO_x. For the Shell process, 70-80% NO_x removal may be a practical limit unless a special device is used, while for the electron beam process, 70-80% removal may be a practical limit for SO_x.

All of the simultaneous removal processes would require further tests and improvements before they become commercially applicable.

REFERENCES

Descriptions in this report are based primarily on Dr. Ando's visits to the FGD and denitrification plants, his discussions with the users and developers of each process, and data made available by them. In addition, the following publications were used as references (the publications are written in English unless otherwise noted).

1. Japan's Sunshine Project, Sunshine Project Promotion Headquarters, Agency of Industrial Science and Technology, MITI (July, 1977).

2. J. Ando, Fundamental Problems of Sulfur Oxides and Flue Gas Desulfurication, Industrial Pollution Control Vol. 12 (September, 1976). (in Japanese).

3. A. P. Altschuller, Regional Transport and Transformation of Sulfur Dioxide to Sulfates in the U.S., J. Air Pollution Control Assoc. 26, 318-324 (April, 1976).

4. Trends of Pollution Control Investment by Private Companies, Industrial Pollution Control Assoc. of Japan (December, 1977). (in Japanese).

5. M. Shimane, New Desulfurization Technology and Residual Oil. Mol, 30-36 (October, 1977). (in Japanese).

6. S. Gomi, R. Takahashi, et al., Thermal Cracking of Residual Oils Using Superheated Steam and Application of the Products, Proceedings of 9th World Petroleum Congress (1975).

7. T. Mori, Cherry-P Process, 2nd PACHEC Meeting, (Denver, Colorado, August, 1977).

8. Japan's Sunshine Project, Summary of Coal Gasification and Liquefaction, Sunshine Project Promotion Headquarters, Agency of Industrial Science and Technology, MITI (August, 1977).

9. Y. Sudo, et al., Commercialization Study of Gas Heater for Wet Sodium Gypsum Process FGD, Karyoku Genshiryoku Hatsuden, 535-545, Vol. 28, No. 6 (June, 1977). (in Japanese).

10. J. Ando and G. A. Isaacs, SO_2 Abatement for Stationary Sources in Japan, Contract No. 21ACX-130, US EPA (January, 1976).

11. O. W. Hargrove, Jr., and W. E. Corbett, Results of EPA-Sponsored Characterization Tests of Louisville Gas and Electric's Paddy's Run Flue Gas Desulfurization System, PACHEC 1977 (Denver, Colorado, August, 1977).

12. M. Miyajima, Flue Gas Desulfurization Plant at Owase-Mita Power Station, EPA-JMA Forum, Hollywood, Florida (November, 1977).

13. Y. Takehana, Flue Gas Desulfurization Plant at Owase-Mita Power Station, Hikari to Netsu, 11-15, Vol. 27, No. 8 (August, 1976). (in Japanese).

14. H. W. Elder, F. T. Princiotta, G. A. Hollinden and S. J. Gage, Sulfur Dioxide Control Technology. Visits in Japan, Interagency Technical Committee (August, 1972).

15. J. Sakanishi and R. H. Quig, One Year's Performance and Operability of the Chemico/Mitsui Carbide Sludge (Lime) Additive SO_2 Scrubbing System, Proceedings of EPA FGD Symposium - 1973 (December, 1973).

16. J. Ando and B. A. Laseke, SO_2 Abatement for Stationary Sources in Japan, EPA 600/7-77-103a (September, 1977).

17. H. Idemura, T. Kanai and H. Yanagioka, Jet Bubbling Flue Gas Desulfurization Process, Proceedings of PACHEC Symposium (Denver, Colorado, August, 1977).

18. D. D. Clasen and H. Idemura, Limestone/Gypsum Jet Bubbling Scrubbing System, EPA FGD Symposium (November, 1977).

19. M. Noguchi, Status Report on Chiyoda Thoroughbred 101 Process, Proceedings of EPA FGD Symposium Vol. II (November, 1974).

20. Y. Yamamichi and J. Nagao, Dowa's Basic Aluminum Sulfate-Gypsum Flue Gas Desulfurization Process, EPA FGD Symposium (March, 1976).

21. J. B. Pohlenz, The Shell Flue Gas Desulfurization Process, EPA FGD Symposium (November, 1974).

22. N. Ninomiya, Simultaneous Removal of NO_x and SO_2 by Activated Carbon, Report of Takeda Chemical (1975). (in Japanese).

23. M. Seki, et al., Ammonium Halide Activated Carbon Catalyst to Decompose NO_x in Stack Gas at Low Temperatures Around 100°C, American Chemical Society, Chicago (August, 1975).

24. F. M. Nooy and J. B. Pohlenz, Nitrogen Oxides Reduction with the Shell Flue Gas Desulfurization Process, Proceedings of PACHEC Symposium (Denver, Colorado, August, 1977).

25. J. Ando, H. Tohata, K. Nagata and B. A. Laseke, NO_x Abatement for Stationary Sources in Japan, EPA 600/7-77-1036, (September, 1977).

26. K. Sawai and T. Gorai, Simultaneous Removal of SO_2 and NO_x from Stack Gas by Scrubbing (CEC Process) Proceedings of PACHEC Symposium (Denver, Colorado, August, 1977).

27. H. L. Faucett, J. D. Maxwell, and T. A. Burnett, Technical Assessment of NO_x Removal Processes for Utility Application, EPA 600/7-77-127 (November, 1977).

28. W. Kawakami and K. Kawamura, Treatment of Oil-fired Flue Gas by Electron Beam, Denkikyokai Zasshi, 29 (December, 1973). (in Japanese).

TECHNICAL REPORT DATA
(Please read Instructions on the reverse before completing)

1. REPORT NO. EPA-600/7-78-210	2.	3. RECIPIENT'S ACCESSION NO.
4. TITLE AND SUBTITLE SO2 Abatement for Stationary Sources in Japan		5. REPORT DATE November 1978
		6. PERFORMING ORGANIZATION CODE
7. AUTHOR(S) Jumpei Ando		8. PERFORMING ORGANIZATION REPORT NO.
9. PERFORMING ORGANIZATION NAME AND ADDRESS Chuo University, Tokyo, Japan		10. PROGRAM ELEMENT NO. 1NE624
		11. CONTRACT/GRANT NO. 68-02-2161
12. SPONSORING AGENCY NAME AND ADDRESS EPA, Office of Research and Development, Industrial Environmental Research Laboratory, Research Triangle Park, NC 27711		13. TYPE OF REPORT AND PERIOD COVERED Final; 9/77 - 10/78
		14. SPONSORING AGENCY CODE EPA/600/13

15. SUPPLEMENTARY NOTES IERL-RTP project officer is J. David Mobley, Mail Drop 61, 919/541-2915.

16. ABSTRACT The report gives results of a study of Japanese government efforts to regulate SOx emissions: the efforts were prompted by serious air pollution problems in Japan during the 1960s. Several technologies are being developed including production of low sulfur gas from coal, fuel desulfurization, and fluidized bed combustion. However, predominant methods currently used for SO2 control in Japan are burning low sulfur fuels and flue gas desulfurization (FGD). Development and application of FGD technology in Japan has preceded similar development in other countries, resulting in a significant reduction in ambient SO2 levels. The stringent, daily average ambient standard of 0.014 ppm has almost been achieved. Several types of FGD systems are currently in use in Japan, including wet lime/limestone, indirect and modified lime/limestone, regenerable, and simultaneous NOx/SOx. These processes have been operated satisfactorily on a commercial scale. Both SO2 removal and operability are typically over 90%. Removals and operabilities of 98-99% can be achieved at higher costs.

17. KEY WORDS AND DOCUMENT ANALYSIS

a. DESCRIPTORS		b. IDENTIFIERS/OPEN ENDED TERMS	c. COSATI Field/Group	
Air Pollution	Limestone	Air Pollution Control	13B	08G
Sulfur Oxides	Coal Gasification	Stationary Sources	07B	13H
Flue Gases	Fossil Fuels	Flue Gas Desulfurization	21B	21D
Desulfurization	Combustion	Lime	07A,07D	
Scrubbers	Fluidized Bed Processing	Japan	13I	
Calcium Oxides	Nitrogen Oxides			

18. DISTRIBUTION STATEMENT Unlimited	19. SECURITY CLASS *(This Report)* Unclassified	21. NO. OF PAGES 328
	20. SECURITY CLASS *(This page)* Unclassified	22. PRICE

EPA Form 2220-1 (9-73)