United States
Environmental Protection
Agency

Industrial Environmental Research
Laboratory
Research Triangle Park NC 27711

EPA-600/7-79-022a
January 1979

EPA

EPA Utility FGD Survey: August-September 1978

Interagency Energy/Environment R&D Program Report

RESEARCH REPORTING SERIES

Research reports of the Office of Research and Development, U.S. Environmental Protection Agency, have been grouped into nine series. These nine broad categories were established to facilitate further development and application of environmental technology. Elimination of traditional grouping was consciously planned to foster technology transfer and a maximum interface in related fields. The nine series are:

1. Environmental Health Effects Research
2. Environmental Protection Technology
3. Ecological Research
4. Environmental Monitoring
5. Socioeconomic Environmental Studies
6. Scientific and Technical Assessment Reports (STAR)
7. Interagency Energy-Environment Research and Development
8. "Special" Reports
9. Miscellaneous Reports

This report has been assigned to the INTERAGENCY ENERGY-ENVIRONMENT RESEARCH AND DEVELOPMENT series. Reports in this series result from the effort funded under the 17-agency Federal Energy/Environment Research and Development Program. These studies relate to EPA's mission to protect the public health and welfare from adverse effects of pollutants associated with energy systems. The goal of the Program is to assure the rapid development of domestic energy supplies in an environmentally-compatible manner by providing the necessary environmental data and control technology. Investigations include analyses of the transport of energy-related pollutants and their health and ecological effects; assessments of, and development of, control technologies for energy systems; and integrated assessments of a wide range of energy-related environmental issues.

EPA REVIEW NOTICE

This report has been reviewed by the participating Federal Agencies, and approved for publication. Approval does not signify that the contents necessarily reflect the views and policies of the Government, nor does mention of trade names or commercial products constitute endorsement or recommendation for use.

This document is available to the public through the National Technical Information Service, Springfield, Virginia 22161.

EPA-600/7-79-022a

January 1979

EPA Utility FGD Survey: August-September 1978

by

M. Melia, M. Smith, T. Koger, and B. Laseke

PEDCo Environmental, Inc.
11499 Chester Road
Cincinnati, Ohio 45246

Contract No. 68-02-2603
Task No. 24
Program Element No. EHE624

EPA Project Officers:

N. Kaplan

Industrial Environmental Research Laboratory
Office of Energy, Minerals, and Industry
Research Triangle Park, NC 27711

J. C. Herlihy

Division of Stationary Source Enforcement
Office of Enforcement
Washington, DC 20460

Prepared for

U.S. ENVIRONMENTAL PROTECTION AGENCY
Office of Research and Development
Washington, DC 20460

NOTICE

This report, (prepared by PEDCo Environmental, Inc., Cincinnati, Ohio, under EPA Contract No. 68-02-2603, Task No. 24) is provided as an information transfer document. Data in this report are supplied voluntarily by utility representatives; flue gas desulfurization (FGD) system designers, vendors, and suppliers; regulatory personnel; and others. Neither EPA nor the designated contractor warrants the accuracy or completeness of information contained in this report.

This report is the fourth of five supplementary issues to the December 1977-January 1978 report. Supplementary issues are cumulative, so that it is necessary to retain only the latest issue and the December 1977-January 1978 report (EPA-600/7-78-051a).

Initial distribution of the report (generally, one copy per company) is limited to organizations and individuals indicating a specific interest in the field of FGD technology. Additional copies of this report and succeeding issues can be purchased from National Technical Information Service, Springfield, Virginia 22151.

CONTENTS

		Page
Notice		ii
Tables		vi
Executive Summary and Highlights		vii
Section 1	Summary List of FGD Systems	1
Section 2	Status of FGD Systems	4
Section 3	Performance Description of Operational FGD Systems	22
	Alabama Electric	
	Tombigbee 2	22
	Arizona Electric Power	
	Apache 2	23
	Arizona Public Service	
	Cholla 1	24
	Cholla 2	25
	Central Illinois Light	
	Duck Creek 1	27
	Columbus and Southern Ohio Electric	
	Conesville 5	28
	Conesville 6	29
	Duquesne Light	
	Elrama 1 through 4	30
	Phillips 1 through 6	32
	Gulf Power	
	Scholz 1B and 2B	34
	Indianapolis Power and Light	
	Petersburg 3	35
	Kansas City Power and Light	
	Hawthorn 3	36
	Hawthorn 4	37
	La Cygne 1	38
	Kansas Power and Light	
	Jeffrey 1	39
	Lawrence 4	40
	Lawrence 5	41
	Kentucky Utilities	
	Green River 1, 2, and 3	42

CONTENTS (continued)

	Page
Louisville Gas and Electric	
Cane Run 4	44
Cane Run 5	45
Mill Creek 3	46
Paddys Run 6	47
Minnkota Power Cooperative	
Milton R. Young 2	48
Montana Power	
Colstrip 1	49
Colstrip 2	50
Nevada Power	
Reid Gardner 1	51
Reid Gardner 2	53
Reid Gardner 3	55
Northern Indiana Public Service	
Dean H. Mitchell 11	57
Northern States Power	
Sherburne County Station 1	59
Sherburne County Station 2	61
Pennsylvania Power	
Bruce Mansfield 1	63
Bruce Mansfield 2	65
Philadelphia Electric	
Eddystone 1A	67
Public Service Company of New Mexico	
San Juan 1	68
San Juan 2	69
South Carolina Public Service	
Winyah 2	70
Southern Mississippi Electric	
R. D. Morrow 1	71
Springfield City Utilities	
Southwest 1	72
Tennessee Valley Authority	
Shawnee 10A	74
Shawnee 10B	75
Widows Creek 8	77
Texas Utilities	
Martin Lake 1	79
Martin Lake 2	80
Monticello 3	81
Utah Power and Light	
Huntington 1	82
Section 4 Summary of FGD Systems by Company	**83**
Section 5 Summary of FGD Systems by Vendor	**84**

CONTENTS (continued)

		Page
Section 6	Summary of New and Retrofit FGD Systems by Process	86
Section 7	Summary of Operating FGD Systems by Process and Generating Units	87
Section 8	Summary of Sludge Disposal Practices for Operational FGD Systems	89
Section 9	Summary of FGD Systems by Process and Regulatory Class	91
Section 10	Summary of FGD Systems Under Construction	93
Section 11	Summary of Planned FGD Systems	95
Section 13	Total of FGD Megawatt Capacity by Year	98
Appendix A	FGD Systems Economics	A-1
Appendix B	FGD Process Flow Diagrams	B-1
Appendix C	Definitions	C-1

TABLES

No.		Page
I	Number and Total MW of FGD Systems	vii
II	Summary of Changes: FGD Summary Report, August - September 1978	x
III	Performance of Operational Units during August - September Period	xi

EXECUTIVE SUMMARY

This report is prepared every other month by PEDCo Environmental, Inc., under a contract to the Industrial Environmental Research Laboratory/RTP and the Division of Stationary Source Enforcement of the U.S. Environmental Protection Agency. Table 1 summarizes the current status of the FGD systems addressed in this 2-month period.

Table I

NUMBER OF TOTAL MW OF FGD SYSTEMS

Status	No. of units	MW
Operational	46	16,054
Under construction	38	16,128
Planning:		
Contract awarded	23	12,450
Letter of intent	1	240
Requesting/evaluating bids	4	2,350
Considering only FGD systems	27	12,160
TOTAL	139	59,382

Table II (page x) summarizes the individual units that changed status during the reporting period.

The performance of the operating systems is summarized in Table III (page xi). Other activity highlights during the months of August and September are summarized below:

The present total power-generating capability of the electric utility industry in the United States is approximately 532.4 GW.[a] Of this total, approximately 250 GW,[b] representing 47 percent of the total, is generated by coal. As indicated in Table I, 46

FGD-equipped coal-fired units (representing 16,054 MW of power capability) are now in service. Thus, 3 percent of the total utility power generating capacity and a little over 6 percent of the utility coal-fired capacity are controlled by FGD. By 1986, the projected total power generating capacity of the electric utility industry in the United States will be approximately 812.7 GW.[a] This represents an increase of 53 percent over the present total and includes retirements of older units (0.4 percent annual average based on year-end power-generation capability). Of the 1986 total, approximately 363.2 GW,[a,b,c] (representing 45 percent of the total) will be generated by coal. 132 of the 139 FGD-equipped coal-fired units shown in Table I, (representing 55,782 MW of power capacity) are now scheduled for operation by 1986; therefore, approximately 7 percent of the projected total generating capacity and 15 percent of the projected coal-fired capacity will be controlled by FGD by the end of 1986.

HIGHLIGHTS: AUGUST-SEPTEMBER 1978

Tombigbee 2 of Alabama Electric Cooperative achieved initial FGD operations over the August-September period. This new coal-fired unit uses ESP's for particulate control and a limestone FGD system for SO_2 control.

Arizona Electric Power Cooperative announced that Apache 2 became operational in September. This 200-MW unit controls particulates by an ESP and SO_2 with a limestone FGD system. Compliance testing is scheduled in early November.

Arizona Public Service reported that Cholla 1 was in service through the month of August with the A-module logging 744 hours of operation, and B-module, 708 hours. The boiler operated 744 hours in February. Reliability index values for Cholla 1 were 100 and 95 percent for A and B modules respectively.

A contract was awarded for the particulate and SO_2 control installation of Basin Electric Power Cooperative. Particulates will be controlled by a baghouse and SO_2 by a lime FGD system. Construction is scheduled to begin at this 455-MW unit in June 1979. The utility announced that it is now requesting bids for the emissions control system at Laramie River 3. Larami River Nos. 1 and 2 are currently under construction.

The 23-MW jet bubbling-reactor demonstration plant on Gulf Power's Scholz Power Generating Station (Units 1B and 2B) became operation during September 1978. This new limestone system features a large gas/liquid interfacial area and provides particulate as well as SO_2 removal. In the SO_2 removal operation, the CT-121 system produces gypsum, which is stacked in the existing pond.

Because of a continuing strike at Kansas City Power and Light, no information was reported for Hawthorn 3 or 4; however, the utility reported La Cygne 1 achieved an average system availability of 94 percent in August and 96 percent in September.

Jeffrey 1 of Kansas Power and Light began initial FGD operations in September 1978. The 680-MW limestone unit is expected to become fully operational by the October-November report period. The utility reported that no forced outages occurred on Lawrence 4 or 5 during this period.

Louisville Gas and Electric announced that the FGD system on Mill Creek 1 is now under construction. The combination lime/limestone system is scheduled to become operational in early 1981. Mill Creek 3 of Louisville Gas and Electric became operational on August 13, 1978. The FGD system is now undergoing shakedown and debugging operations. Operabilities for Cane Run 4 and 5 were 94 and 86 percent for August and 100 and 80 percent for September.

Nevada Power reported that during the period availabilities ranged from 94 to 100 percent for Reid Gardner 1, 2, and 3, while reliabilities were between 93 and 100 percent.

The Wellman Lord FGD system on Dean H. Mitchell 11 of Northern Indiana Public Service Company achieved reliabilities of 98 and 99 percent during August and September, respectively. Boiler hours were 707 and 319 for August and September.

The FGD systems at Sherburne 1 and 2 of Northern States Power demonstrated total-system availabilities of 91 and 93 percent for August. Total-system availabilities for September were 97 and 96 percent for Units 1 and 2, respectively.

The Public Service Company of New Mexico announced that initial operations began at San Juan 2 in early September; the utility added that a contract was awarded for the remainder of San Juan 3 and the total FGD system on Unit 4.

Seminole Electric announced plans to construct one and possibly two new 600-MW coal-fired units, Seminole 1 and 2, that will utilize ESP's for particulate removal and a limestone FGD system for SO_2 control. The utility expects to initiate bid requests in May 1979.

R. D. Morrow 1 of Southern Mississippi Electric began initial FGD operations during the August-September report period. The acceptance test is scheduled in November.

Construction began at the Widows Creek 7 FGD facility of Tennessee Valley Authority and the retrofit unit is expected to begin FGD operations in October 1980.

TABLE II. SUMMARY OF CHANGES: FGD SUMMARY REPORT, AUGUST - SEPTEMBER 1978

FGD status report	Operational		Under construction		Contract awarded		Letter of intent		Requesting/ eval. bids		Considering FGD		Total	
	No.	MW	No.	MW	No.	MW	No.	MW	No.	MW	No.	MW	No.	MW
7-31-78	40	14,440	42	16,834	21	10,708	3	1,960	4	2,255	29	13,232	139	59,469
Alabama Electric Coop	+1	225	-1	225										
Tombigbee 2														
Arizona Electric Power Coop	+1	200	-1	200										
Apache 2														
Basin Electric Power Coop					+1	455			-1	455				
Antelope Valley 1														
Basin Electric Power Coop									+1	550	-1	550		
Laramie River 3														
Gulf Power	+1	23	-1	20										
Scholz 1B and 2B														
Kansas Power and Light	+1	680	-1	680										
Jefferey 1														
Louisville Gas and Electric			+1	330	-1	330								
Mill Creek 1														
New England Electric System											-1	650	-1	650
Brayton Point 3														
Northern States Power					+1	860	-1	860						
Sherburne 3														
Northern States Power					+1	860	-1	860						
Sherburne 4														
Public Service of New Mexico	+1	306	-1	306										
San Juan 2														
Public Service of New Mexico					+1	472					-1	472		
San Juan 4														
Seminole Electric											+1	600	+1	600
Seminole 1														
Southern Mississippi Electric	+1	180	-1	180										
R.D. Morrow 1														
Tennessee Valley Authority			+1	575	-1	575								
Widows Creek 7														
Total	46	16,054	38	16,128	23	12,450	1	240	4	2,350	27	12,160	139	59,382

TABLE III. PERFORMANCE OF OPERATIONAL UNITS DURING AUGUST - SEPTEMBER PERIOD

Plant	FGD system design capacity	FGD unit on-line during period	No information for this period	Shutdown throughout period	FGD system availability, %		FGD system operability, %		FGD system reliability, %		FGD system utilization, %	
					August	September	August	September	August	September	August	September
Tombigbee 2	225	225										
Apache 2	200	200										
Cholla 1	115	115							98			
Cholla 2	250	250										
Duck Creek 1	400	400										
Conesville 5	400	400			18	58	21	45	21	54	18	44
Conesville 6	400	400			55	62	53	53	74	55	48	52
Elrama	510	510										
Phillips	410	410										
Scholz 1B and 2B	23	23				99						
Petersburg 3	530	530										
Hawthorn 3	100	100										
Hawthorn 4	100	100										
La Cygne	820	820			94	96						
Jeffrey 1	680	680										
Lawrence 4	125	125										
Lawrence 5	400	400										
Green River 1,2, and 3	64	64			61	76	99	100	99	98	28	41
Cane Run 4	178	178					94	100			94	19
Cane Run 5	183	183					86	80			62	67
Mill Creek 3	425	425						81				80
Paddys Run 6	65	65										
Milton R. Young 2	450	450										
Colstrip 1	360		360									
Colstrip 2	360		360									
Reid Gardner 1	125	125			94	99	93	99	94	97	89	87
Reid Gardner 2	125	125			95	100	93	100	82	97	81	94
Reid Gardner 3	125	125			98	100	98	100	98	97	97	32
Dean H. Mitchell 11	115	115			98	44			98	99	98	44
Sherburne 1	710	710			91	97						
Sherburne 2	710	710			93	96						
Bruce Mansfield 1	825		825									
Bruce Mansfield 2	825		825									
Eddystone 1A	120	120					38	78			32	56
San Juan 1	314	314										
San Juan 2	306	306										
Winyah 2	280	280										
R. D. Morrow 1	180	180										
Southwest 1	200	100		100	30	11	30	14	30	14	30	14
Shawnee 10A	10	10										
Shawnee 10B	10	10										
Widows Creek 8	550		550									
Martin Lake 1	793	793										
Martin Lake 2	793	793										
Monticello 3	750	750										
Huntington 1	415	415					100	100			73	69
TOTAL	16,054	13,034	2,920	100								

REFERENCES

a. Sixth Biennial Survey of Power Equipment Requirements of the U.S. Electric Utility Industry: 1977-1986, sponsored by the Power Equipment Div., National Electrical Manufacturers Association.

b. Policy Testing Model for Electric Utilities, Exhibit II-3, Developed by Temple, Barker, and Sloane, Inc.

c. 12 Annual Power Engineering Survey, Power Engineering, April 1978.

SECTION 1
SUMMARY LIST OF FGD SYSTEMS

COMPANY NAME	UNIT NAME	START UP DATE	STATUS	REG CLASS
ALABAMA ELECTRIC COOP	TOMBIGBEE 2	9-78	1	A
ALABAMA ELECTRIC COOP	TOMBIGBEE 3	6-79	2	A
ALLEGHENY POWER SYSTEM	PLEASANTS 1	3-79	2	A
ALLEGHENY POWER SYSTEM	PLEASANTS 2	3-80	2	A
ARIZONA ELECTRIC POWER COOP	APACHE 2	8-78	1	B
ARIZONA ELECTRIC POWER COOP	APACHE 3	4-79	2	B
ARIZONA PUBLIC SERVICE	CHOLLA 1	10-73	1	B
ARIZONA PUBLIC SERVICE	CHOLLA 2	6-78	1	B
ARIZONA PUBLIC SERVICE	CHOLLA 4	6-80	2	B
ARIZONA PUBLIC SERVICE	FOUR CORNERS 1	0-79	6	B
ARIZONA PUBLIC SERVICE	FOUR CORNERS 2	0-79	6	B
ARIZONA PUBLIC SERVICE	FOUR CORNERS 3	0-79	6	B
ARIZONA PUBLIC SERVICE	FOUR CORNERS 4	0-82	3	B
ARIZONA PUBLIC SERVICE	FOUR CORNERS 5	0-82	3	B
ASSOCIATED ELECTRIC COOP	THOMAS HILL 3	1-82	3	A
BASIN ELECTRIC POWER COOP	ANTELOPE VALLEY 1	11-81	3	B
BASIN ELECTRIC POWER COOP	ANTELOPE VALLEY 2	11-83	6	B
BASIN ELECTRIC POWER COOP	LARAMIE RIVER 1	4-80	2	B
BASIN ELECTRIC POWER COOP	LARAMIE RIVER 2	10-80	2	B
BASIN ELECTRIC POWER COOP	LARAMIE RIVER 3	4-82	5	B
BIG RIVERS ELECTRIC	GREEN 1	12-79	2	A
BIG RIVERS ELECTRIC	GREEN 2	12-80	2	A
CENTRAL ILLINOIS LIGHT	DUCK CREEK 1	7-78	1	A
CENTRAL ILLINOIS LIGHT	DUCK CREEK 2	1-82	5	A
CENTRAL ILLINOIS PUBLIC SERV	NEWTON 1	11-79	2	A
CENTRAL MAINE POWER	SEARS ISLAND 1	11-86	6	A
CINCINNATI GAS & ELECTRIC	EAST BEND 2	1-81	3	A
COLORADO UTE ELECTRIC ASSN.	CRAIG 1	3-79	2	B
COLORADO UTE ELECTRIC ASSN.	CRAIG 2	3-79	2	B
COLUMBUS & SOUTHERN OHIO ELEC.	CONESVILLE 5	1-77	1	B
COLUMBUS & SOUTHERN OHIO ELEC.	CONESVILLE 6	6-78	1	B
COLUMBUS & SOUTHERN OHIO ELEC.	POSTON 5	0-83	6	B
COLUMBUS & SOUTHERN OHIO ELEC.	POSTON 6	0-85	6	B
COMMONWEALTH EDISON	POWERTON 51	3-79	2	C
COOPERATIVE POWER ASSOCIATION	COAL CREEK 1	2-79	2	A
COOPERATIVE POWER ASSOCIATION	COAL CREEK 2	11-79	2	A
DELMARVA POWER & LIGHT	DELWARE CITY 1, 2 & 3	4-80	2	C
DUQUESNE LIGHT	ELRAMA POWER STATION	10-75	1	B
DUQUESNE LIGHT	PHILLIPS POWER STATION	7-73	1	B
EAST KENTUCKY POWER COOP	SPURLOCK 2	3-80	3	A
GENERAL PUBLIC UTILITIES	COHO 1	5-87	6	A
GENERAL PUBLIC UTILITIES	SEWARD 7	5-84	6	A
GULF POWER	SCHOLZ 1B & 2B	8-78	1	C
HOOSIER ENERGY	MEROM 1	4-81	2	A
HOOSIER ENERGY	MEROM 2	1-82	2	A
INDIANAPOLIS POWER & LIGHT	PETERSBURG 3	10-77	1	A
INDIANAPOLIS POWER & LIGHT	PETERSBURG 4	4-82	2	A
KANSAS CITY POWER & LIGHT	HAWTHORN 3	11-72	1	B
KANSAS CITY POWER & LIGHT	HAWTHORN 4	8-72	1	B
KANSAS CITY POWER & LIGHT	LA CYGNE 1	2-73	1	C
KANSAS POWER & LIGHT	JEFFREY 1	8-78	1	B
KANSAS POWER & LIGHT	JEFFREY 2	6-80	2	B
KANSAS POWER & LIGHT	LAWRENCE 4	12-68	1	B
KANSAS POWER & LIGHT	LAWRENCE 5	11-71	1	B
KENTUCKY UTILITIES	GREEN RIVER 1,2 & 3	9-75	1	C
LAKELAND UTILITIES	MCINTOSH 3	10-81	3	A
LOUISVILLE GAS & ELECTRIC	CANE RUN 4	8-76	1	B
LOUISVILLE GAS & ELECTRIC	CANE RUN 5	12-77	1	B
LOUISVILLE GAS & ELECTRIC	CANE RUN 6	12-78	2	B
LOUISVILLE GAS & ELECTRIC	MILL CREEK 1	1-81	2	B

1. OPERATIONAL UNITS
2. UNITS UNDER CONSTRUCTION
3. PLANNED - CONTRACT AWARDED
4. PLANNED - LETTER OF INTENT SIGNED
5. PLANNED - REQUESTING/EVALUATING BIDS
6. CONSIDERING ONLY FGD SYSTEMS
7. CONSIDERING FGD SYSTEMS AS WELL AS ALTERNATIVE METHODS

A. BOILER CONSTRUCTED SUBJECT TO FEDERAL NSPS
B. BOILER SUBJECT TO STATE STANDARD THAT IS MORE STRINGENT THAN THE FEDERAL NSPS
C. BOILER SUBJECT TO STATE STANDARD THAT IS EQUAL TO OR LESS STRINGENT THAN NSPS
D. OTHER
E. REGULATORY CLASS UNKNOWN

SECTION 1
SUMMARY LIST OF FGD SYSTEMS

COMPANY NAME	UNIT NAME	START UP DATE	STATUS	REG CLASS
LOUISVILLE GAS & ELECTRIC	MILL CREEK 2	1-82	3	B
LOUISVILLE GAS & ELECTRIC	MILL CREEK 3	8-78	1	B
LOUISVILLE GAS & ELECTRIC	MILL CREEK 4	6-80	2	B
LOUISVILLE GAS & ELECTRIC	PADDYS RUN 6	4-73	1	C
MINNESOTA POWER & LIGHT	CLAY BOSWELL 4	5-80	2	A
MINNKOTA POWER COOPERATIVE	MILTON R. YOUNG 2	9-77	1	B
MONTANA POWER	COLSTRIP 1	11-75	1	A
MONTANA POWER	COLSTRIP 2	8-76	1	A
MONTANA POWER	COLSTRIP 3	7-80	3	B
MONTANA POWER	COLSTRIP 4	7-81	3	B
NEVADA POWER	HARRY ALLEN 1	6-85	6	A
NEVADA POWER	HARRY ALLEN 2	6-86	6	A
NEVADA POWER	HARRY ALLEN 3	6-87	6	A
NEVADA POWER	HARRY ALLEN 4	6-88	6	A
NEVADA POWER	REID GARDNER 1	4-74	1	A
NEVADA POWER	REID GARDNER 2	4-74	1	A
NEVADA POWER	REID GARDNER 3	7-76	1	A
NEVADA POWER	REID GARDNER 4	0-83	6	A
NEVADA POWER	WARNER VALLEY 1	6-84	6	A
NEVADA POWER	WARNER VALLEY 2	6-85	6	A
NEW ENGLAND ELEC SYSTEM	BRAYTON POINT 3	0- 0	7	C
NIAGARA MOHAWK POWER COOP	CHARLES R. HUNTLEY 6	0-80	3	C
NORTHERN INDIANA PUB SERVICE	BAILLY 7	0- 0	6	C
NORTHERN INDIANA PUB SERVICE	BAILLY 8	0- 0	6	C
NORTHERN INDIANA PUB SERVICE	DEAN H. MITCHELL 11	11-76	1	C
NORTHERN STATES POWER	SHERBURNE 1	3-76	1	B
NORTHERN STATES POWER	SHERBURNE 2	4-77	1	B
NORTHERN STATES POWER	SHERBURNE 3	5-84	3	B
NORTHERN STATES POWER	SHERBURNE 4	0-87	3	B
OTTER TAIL POWER	COYOTE 1	5-81	2	A
PACIFIC GAS AND ELECTRIC	FOSSIL 1	0-85	6	B
PACIFIC GAS AND ELECTRIC	FOSSIL 2	0-86	6	B
PACIFIC POWER & LIGHT	JIM BRIDGER 4	9-79	2	B
PENNSYLVANIA POWER	BRUCE MANSFIELD 1	4-76	1	B
PENNSYLVANIA POWER	BRUCE MANSFIELD 2	7-77	1	B
PENNSYLVANIA POWER	BRUCE MANSFIELD 3	4-80	2	B
PHILADELPHIA ELECTRIC	CROMBY	6-80	6	B
PHILADELPHIA ELECTRIC	EDDYSTONE 1A	9-75	1	B
PHILADELPHIA ELECTRIC	EDDYSTONE 1B	6-80	4	B
PHILADELPHIA ELECTRIC	EDDYSTONE 2	6-80	6	B
POTOMAC ELECTRIC POWER	DICKERSON 4	5-85	7	D
POWER AUTHORITY OF NEW YORK	ARTHUR KILL PLANT	11-84	7	B
PUBLIC SERVICE OF INDIANA	GIBSON 5	0-82	5	A
PUBLIC SERVICE OF NEW MEXICO	SAN JUAN 1	4-78	1	B
PUBLIC SERVICE OF NEW MEXICO	SAN JUAN 2	7-78	1	B
PUBLIC SERVICE OF NEW MEXICO	SAN JUAN 3	6-79	3	B
PUBLIC SERVICE OF NEW MEXICO	SAN JUAN 4	1-82	3	B
SALT RIVER PROJECT	CORONADO 1	1-79	2	B
SALT RIVER PROJECT	CORONADO 2	1-80	2	B
SALT RIVER PROJECT	CORONADO 3	0-87	6	B
SAN MIGUEL ELECTRIC COOP	SAN MIGUEL 1	6-80	2	A
SEMINOLE ELECTRIC	SEMINOLE 1	6-83	6	A
SIKESTON BOARD OF MUNIC. UTIL.	SIKESTON POWER STATION	6-81	2	A
SOUTH CAROLINA PUBLIC SERVICE	WINYAH 2	7-77	1	A
SOUTH CAROLINA PUBLIC SERVICE	WINYAH 3	5-80	3	A
SOUTHERN ILLINOIS POWER COOP	MARION 4	9-78	2	A
SOUTHERN ILLINOIS POWER COOP	MARION 5	0-84	6	A
SOUTHERN INDIANA GAS & ELEC	A. B. BROWN 1	4-79	2	A
SOUTHERN MISSISSIPPI ELECTRIC	R. D. MORROW 1	8-78	1	A
SOUTHERN MISSISSIPPI ELECTRIC	R. D. MORROW 2	1-79	2	A

1. OPERATIONAL UNITS
2. UNITS UNDER CONSTRUCTION
3. PLANNED - CONTRACT AWARDED
4. PLANNED - LETTER OF INTENT SIGNED
5. PLANNED - REQUESTING/EVALUATING BIDS
6. CONSIDERING ONLY FGD SYSTEMS
7. CONSIDERING FGD SYSTEMS AS WELL AS ALTERNATIVE METHODS

A. BOILER CONSTRUCTED SUBJECT TO FEDERAL NSPS
B. BOILER SUBJECT TO STATE STANDARD THAT IS MORE STRINGENT THAN THE FEDERAL NSPS
C. BOILER SUBJECT TO STATE STANDARD THAT IS EQUAL TO OR LESS STRINGENT THAN NSPS
D. OTHER
E. REGULATORY CLASS UNKNOWN

SECTION 1
SUMMARY LIST OF FGD SYSTEMS

COMPANY NAME	UNIT NAME	START UP DATE	STATUS	REG CLASS
SOUTHWESTERN ELECTRIC POWER	HENRY W. PERKEY 1	2-84	3	A
SPRINGFIELD CITY UTILITIES	SOUTHWEST 1	4-77	1	A
SPRINGFIELD WATER LIGHT & PWR	DALLMAN 3	7-80	3	A
ST. JOE ZINC	G. F. WEATON 1	12-78	2	B
TENNESSEE VALLEY AUTHORITY	SHAWNEE 10A	4-72	1	C
TENNESSEE VALLEY AUTHORITY	SHAWNEE 10B	4-72	1	C
TENNESSEE VALLEY AUTHORITY	WIDOWS CREEK 7	10-80	2	C
TENNESSEE VALLEY AUTHORITY	WIDOWS CREEK 8	5-77	1	C
TEXAS MUNICIPAL POWER AGENCY	GIBBONS CREEK 1	1-82	3	A
TEXAS POWER & LIGHT	SANDOW 4	7-80	3	A
TEXAS POWER & LIGHT	TWIN OAKS 1	8-83	6	A
TEXAS POWER & LIGHT	TWIN OAKS 2	9-84	6	A
TEXAS UTILITIES	FOREST GROVE 1	0-81	5	A
TEXAS UTILITIES	MARTIN LAKE 1	8-77	1	A
TEXAS UTILITIES	MARTIN LAKE 2	5-78	1	A
TEXAS UTILITIES	MARTIN LAKE 3	12-78	2	A
TEXAS UTILITIES	MARTIN LAKE 4	11-82	3	A
TEXAS UTILITIES	MONTICELLO 3	5-78	1	A
UTAH POWER & LIGHT	EMERY 1	12-78	2	A
UTAH POWER & LIGHT	EMERY 2	6-80	3	A
UTAH POWER & LIGHT	HUNTINGTON 1	5-78	1	A
VIRGINIA ELECTRIC & POWER	MT. STORM	0- 0	7	C
WISCONSIN POWER & LIGHT	COLUMBIA 2	1-80	3	A

1. OPERATIONAL UNITS
2. UNITS UNDER CONSTRUCTION
3. PLANNED - CONTRACT AWARDED
4. PLANNED - LETTER OF INTENT SIGNED
5. PLANNED - REQUESTING/EVALUATING BIDS
6. CONSIDERING ONLY FGD SYSTEMS
7. CONSIDERING FGD SYSTEMS AS WELL AS ALTERNATIVE METHODS

A. BOILER CONSTRUCTED SUBJECT TO FEDERAL NSPS
B. BOILER SUBJECT TO STATE STANDARD THAT IS MORE STRINGENT THAN THE FEDERAL NSPS
C. BOILER SUBJECT TO STATE STANDARD THAT IS EQUAL TO OR LESS STRINGENT THAN NSPS
D. OTHER
E. REGULATORY CLASS UNKNOWN

SECTION 2
STATUS OF FGD SYSTEMS

UNIT IDENTIFICATION	CURRENT STATUS
ALABAMA ELECTRIC COOP TOMBIGBEE 2 225 MW - NEW COAL: 1.15% SULFUR PEABODY ENGINEERING LIMESTONE STARTUP 9/78	REFER TO SECTION 3 OF THIS REPORT FOR ADDITIONAL INFORMATION. PEABODY ENGINEERING WAS AWARDED A CONTRACT FOR THE INSTALLATION OF A LIMESTONE FGD SYSTEM ON THIS UNIT. A HIGH-EFFICIENCY ESP INSTALLED UPSTREAM OF THE FGD SYSTEM PROVIDES PRIMARY PARTICULATE CONTROL. THE FGD SYSTEM CONTAINS TWO SCRUBBING TRAINS, TREATING APPROXIMATELY 70% OF THE FLUE GAS FOR REMOVAL OF SO2. STACK GAS REHEAT IS NOT REQUIRED. THE UNIT IS CURRENTLY IN THE SHAKEDOWN-DEBUGGING PHASE OF OPERATIONS.
ALABAMA ELECTRIC COOP TOMBIGBEE 3 225 MW - NEW COAL: 1.15% SULFUR PEABODY ENGINEERING LIMESTONE STARTUP 6/79	PEABODY ENGINEERING HAS BEEN AWARDED A CONTRACT FOR THE INSTALLATION OF A LIMESTONE FGD SYSTEM ON THIS UNIT. A HIGH-EFFICIENCY ESP WILL BE INSTALLED UPSTREAM OF THE FGD SYSTEM TO PROVIDE PRIMARY PARTICULATE CONTROL. THE FGD SYSTEM CONSISTS OF TWO TRAINS, TOGETHER TREATING APPROXIMATELY 70% OF THE FLUE GAS FOR REMOVAL OF SULFUR DIOXIDE. STACK GAS REHEAT WILL NOT BE REQUIRED. CONSTRUCTION ON THE UNIT 3 TURBINE AND BOILER IS NOW 50% COMPLETE.
ALLEGHENY POWER SYSTEM PLEASANTS 1 625 MW - NEW COAL: 4.5% SULFUR BABCOCK & WILCOX LIME STARTUP 3/79	THE THREE PRINCIPAL OPERATING UTILITY COMPANIES OF THE ALLEGHENY POWER SYSTEM ARE INSTALLING AN EMISSION CONTROL SYSTEM FOR THIS NEW COAL-FIRED UNIT WHICH INCLUDES A HIGH EFFICIENCY ESP UPSTREAM OF FOUR TRAY TOWERS FOR THE CONTROL OF PARTICULATES AND SULFUR DIOXIDE. DESIGN REMOVAL EFFICIENCIES FOR THIS EMISSION CONTROL SYSTEM ARE 99.5 AND 90 PERCENT RESPECTIVELY. THE DRAVO CO. IS SUPPLYING THIOSORBIC LIME. THE CONSULTING ENGINEERING FIRM IS UNITED ENGINEERS AND CONSTRUCTORS. CURRENTLY, ERECTION OF THE SCRUBBING EQUIPMENT IS IN PROGRESS.
ALLEGHENY POWER SYSTEM PLEASANTS 2 625 MW - NEW COAL: 4.5% SULFUR BABCOCK & WILCOX LIME STARTUP 3/80	THE THREE PRINCIPAL OPERATING UTILITY COMPANIES OF THE ALLEGHENY POWER SYSTEM ARE INSTALLING AN EMISSION CONTROL SYSTEM FOR THIS NEW COAL-FIRED UNIT WHICH INCLUDES A HIGH EFFICIENCY ESP UPSTREAM OF FOUR TRAY TOWERS FOR THE CONTROL OF PARTICULATES AND SULFUR DIOXIDE. DESIGN REMOVAL EFFICIENCIES FOR THIS EMISSION CONTROL SYSTEM ARE 99.5 AND 90 PERCENT, RESPECTIVELY. THE DRAVO CO. IS SUPPLYING THIOSORBIC LIME. THE CONSULTING ENGINEERING FIRM IS UNITED ENGINEERS AND CONSTRUCTORS. CURRENTLY, FOUNDATION WORK ON THE SCRUBBER PLANT IS IN PROGRESS.
ARIZONA ELECTRIC POWER COOP APACHE 2 200 MW - NEW COAL: 0.7% SULFUR, 10% ASH RESEARCH COTTRELL LIMESTONE STARTUP 8/78	REFER TO SECTION 3 OF THIS REPORT FOR ADDITIONAL INFORMATION. THE FGD SYSTEM FOR THIS NEW 200 MW UNIT WAS SUPPLIED BY RESEARCH COTTRELL. THE DESIGN INCLUDES A 22 ACRE SLUDGE POND AND A 64 ACRE ASH POND, BOTH OF WHICH ARE UNLINED AND TEN FEET DEEP. A REHEAT SYSTEM IS NOT INCLUDED. THE LINERS USED IN THE STACK AND THE DUCTS THAT LEAD TO THE STACK ARE A NEW COLE BRAND CXL2000 WHICH HAS A VERY HIGH HEAT RESISTANCE. THIS UNIT BURNS BITUMINOUS COAL WITH SULFUR AND ASH CONTENTS OF .7% AND 10% RESPECTIVELY. INITIAL OPERATION OF THIS UNIT BEGAN IN AUGUST, 1978.
ARIZONA ELECTRIC POWER COOP APACHE 3 200 MW - NEW COAL: 0.7% SULFUR, 10% ASH RESEARCH COTTRELL LIMESTONE STARTUP 4/79	CONSTRUCTION OF UNIT 3 IS NOW ESSENTIALLY COMPLETE. STRUCTURE ERECTION OF THE SCRUBBER-ABSORBER TOWERS IS COMPLETE. EACH SCRUBBER CAN HANDLE 400,000 ACFM @ 270 F AND RECIRCULATE 20,000 GPM OF SLURRY. BOILER CONSTRUCTION HAS BEGUN. THERE ARE CURRENTLY 2 PONDS WITH A TOTAL OF 20-YRS CAPACITY FOR THE DISPOSAL OF THE UNFIXATED SLUDGE. 2 ADDITIONAL PONDS ARE PLANNED PROVIDING AN ADDITIONAL 20 YRS OF DISPOSAL CAPABILITY. THERE WILL BE NO REHEAT. BECAUSE OF THE HIGH COST OF THE UNIT 2 STACK LINER, UNIT 3 WILL USE A CEILCOTE LINING INSTEAD OF THE CXL2000 USED IN UNIT 2.
ARIZONA PUBLIC SERVICE CHOLLA 1 115 MW - RETROFIT COAL: 0.55% SULFUR, 10% ASH RESEARCH COTTRELL LIMESTONE STARTUP 10/73	REFER TO SECTION 3 OF THIS REPORT FOR ADDITIONAL INFORMATION. THIS LIMESTONE SCRUBBING SYSTEM WAS PLACED IN SERVICE IN OCTOBER 1973. THE SCRUBBER PLANT CONSISTS OF TWO PARALLEL SCRUBBING TRAINS. PARTICULATE CONTROL IS PROVIDED BY TWO FLOODED-DISC SCRUBBERS. SO2 CONTROL IS PROVIDED BY ONE PACKED (MUNTERS PACKING) TOWER (A-SIDE). FLUE GAS CLEANING WASTES ARE DISCHARGED TO AN EXISTING FLY ASH POND. NO WATER IS RECYCLED BACK FROM THE DISPOSAL POND. IN-LINE STEAM REHEATERS RAISE THE GAS TEMPERATURE 40 F.
ARIZONA PUBLIC SERVICE CHOLLA 2 250 MW - NEW COAL: 0.55% SULFUR, 10% ASH RESEARCH COTTRELL LIMESTONE STARTUP 6/78	REFER TO SECTION 3 OF THIS REPORT FOR ADDITIONAL INFORMATION. THE CONTRACT FOR THIS WET LIMESTONE SCRUBBING SYSTEM WAS AWARDED BY THE UTILITY TO RESEARCH-COTTRELL. THE DESIGN INCLUDES MECHANICAL COLLECTORS FOR PRIMARY PARTICULATE REMOVAL. THE FGD SYSTEM CONSISTS OF FOUR PARALLEL FLOODED-DISC AND PACKED TOWER ABSORBER TRAINS. THREE ARE REQUIRED FOR FULL LOAD CAPACITY. INITIAL OPERATIONS BEGAN IN JUNE 1978. COMPLIANCE TESTING WAS COMPLETED DURING THE SECOND WEEK OF AUGUST 1978. THE UNIT IS CURRENTLY UNDERGOING SHAKEDOWN AND DEBUGGING OPERATIONS.

SECTION 2
STATUS OF FGD SYSTEMS

UNIT IDENTIFICATION	CURRENT STATUS
ARIZONA PUBLIC SERVICE CHOLLA 4 350 MW - NEW COAL: 0.7% SULFUR RESEARCH COTTRELL LIMESTONE STARTUP 6/80	UNIT NO. 4 IS CURRENTLY UNDER CONSTRUCTION. APS HAS AWARDED THE FGD CONTRACT TO RESEARCH COTTRELL. THE STATE REGULATORY AGENCY HAS NOT YET DECIDED THE EMISSIONS REGULATIONS WHICH WILL APPLY TO THE PLANT. THE C-E BOILER WILL FIRE THE SAME COAL AS CHOLLA NO. 1, WITH SULFUR CONTENT OF 0.44-1.0 PERCENT. THE A-E FIRM IS EBASCO. THE FGD SYSTEM IS A DOUBLE LOOP LIMESTONE ABSORPTION PROCESS AND REVENUES OF THE CONTRACT TO R-C ARE REPORTED TO BE $5 MM. FOR CONTROL OF PARTICULATE AN ESP WILL HANDLE 100% OF THE FLUE GAS.
ARIZONA PUBLIC SERVICE FOUR CORNERS 1 175 MW - RETROFIT COAL: 0.7% SULFUR CHEMICO/APS LIME/ALKALINE FLYASH STARTUP 0/79	APS WILL BE UPGRADING THE OPERATIONAL PARTICULATE SCRUBBERS AT THE FOUR CORNERS 1, 2 AND 3 FOR ADDITIONAL SO2 REMOVAL. CURRENTLY, EACH UNIT HAS 2 CHEMICO VENTURI SCRUBBER MODULES FOR PARTICULATE CONTROL. ROUGHLY 30% OF THE FLUE GAS SO2 CONTENT IS REMOVED AT THE PRESENT TIME IN THE VENTURIS WITH THE HIGH ALKALINE FLYASH. NEW MEXICO APC OFFICALS INDICATED THAT THE 5 FOUR CORNERS UNITS WILL BE REQUIRED TO REMOVE AT LEAST 67.5% OF THE STATION SO2 (ALL 5 UNITS CONSIDERED TOGETHER). ADDITIONAL ALKALINITY WILL BE IMPARTED TO THE SCRUBBING SOLUTION BY ADDING LIME.
ARIZONA PUBLIC SERVICE FOUR CORNERS 2 175 MW - RETROFIT COAL: 0.7% SULFUR CHEMICO/APS LIME/ALKALINE FLYASH STARTUP 0/79	APS WILL BE UPGRADING THE OPERATIONAL PARTICULATE SCRUBBERS AT THE FOUR CORNERS UNIT NOS. 1, 2 AND 3 FOR ADDITIONAL SO2 REMOVAL. EACH UNIT HAS 2 CHEMICO VENTURI SCRUBBER MODULES FOR PARTICULATE CONTROL. ROUGHLY 30% OF THE FLUE GAS SO2 CONTENT IS REMOVED AT THE PRESENT TIME IN THE VENTURIS WITH THE HIGH ALKALINE FLYASH. NEW MEXICO APC OFFICALS INDICATED THAT THE 5 FOUR CORNERS UNITS WILL BE REQUIRED TO REMOVE AT LEAST 67.5% OF THE STATION SO2 (ALL 5 UNITS, CONSIDERED TOGETHER). ADDITONAL ALKALINITY WILL BE IMPARTED TO THE SCRUBBING SOLUTION BY ADDING LIME.
ARIZONA PUBLIC SERVICE FOUR CORNERS 3 229 MW - RETROFIT COAL: 0.7% SULFUR CHEMICO/APS LIME/ALKALINE FLYASH STARTUP 0/79	APS WILL BE UPGRADING THE OPERATIONAL PARTICULATE SCRUBBERS AT THE FOUR CORNERS UNIT NOS. 1, 2 AND 3 FOR ADDITIONAL SO2 REMOVAL. EACH UNIT HAS 2 CHEMICO VENTURI SCRUBBER MODULES FOR PARTICULATE CONTROL. ROUGHLY 30% OF THE FLUE GAS SO2 CONTENT IS REMOVED AT THE PRESENT TIME IN THE VENTURIS WITH THE HIGH ALKALINE FLYASH. NEW MEXICO APC OFFICALS INDICATED THAT THE 5 FOUR CORNERS UNITS WILL BE REQUIRED TO REMOVE AT LEAST 67.5% OF THE STATION SO2 (ALL 5 UNITS CONSIDERED TOGETHER). ADDITIONAL ALKALINITY WILL BE IMPARTED TO THE SCRUBBING SOLUTION BY ADDING LIME.
ARIZONA PUBLIC SERVICE FOUR CORNERS 4 755 MW - RETROFIT COAL: 0.7% SULFUR UNITED ENGINEERS PROCESS NOT SELECTED STARTUP 0/82	THE UTILITY IS CURRENTLY EVALUATING THE DATA AND INFORMATION ACCUMULATED DURING THE HORIZONTAL PROTOTYPE SCRUBBING PROGRAM IN ORDER TO ASCERTAIN VARIOUS POSSIBLE STRATEGIES TO CONTROL THE EMISSIONS FROM THIS COAL FIRED 755-MW UNIT. APS WILL BE REQUIRED TO REDUCE THE CURRENT LEVEL OF SO2 EMISSIONS FROM THE ENTIRE PLANT BY INCREASING THE REMOVAL EFFICIENCY TO AT LEAST 67.5%. A CONTRACT HAS BEEN AWARDED TO UNITED ENGINEERS FOR THE ENGINEERING AND CONSTRUCTION OF AN FGD SYSTEM.
ARIZONA PUBLIC SERVICE FOUR CORNERS 5 755 MW - RETROFIT COAL: 0.7% SULFUR UNITED ENGINEERS PROCESS NOT SELECTED STARTUP 0/82	THE UTILITY IS CURRENTLY EVALUATING THE DATA AND INFORMATION ACCUMULATED DURING THE HORIZONTAL PROTOTYPE SCRUBBING PROGRAM IN ORDER TO ASCERTAIN VARIOUS POSSIBLE STRATEGIES TO CONTROL THE EMISSIONS FROM THIS COAL FIRED 755-MW UNIT. APS WILL BE REQUIRED TO REDUCE THE CURRENT LEVEL OF SO2 EMISSIONS FROM THE ENTIRE PLANT BY INCREASING THE REMOVAL EFFICIENCY TO AT LEAST 67.5%. A CONTRACT HAS BEEN AWARDED TO UNITED ENGINEERS FOR THE ENGINEERING AND CONSTRUCTION OF AN FGD SYSTEM.
ASSOCIATED ELECTRIC COOP THOMAS HILL 3 670 MW - NEW COAL: 4.8% SULFUR, 11.2% ASH PULLMAN KELLOGG LIMESTONE STARTUP 1/82	ASSOCIATED ELECTRIC COOP AWARDED A CONTRACT TO PULLMAN KELLOGG FOR THE ENGINEERING, PROCUREMENT AND CONSTRUCTION OF AN FGD SYSTEM ON THE UTILITY'S THOMAS HILL UNIT NO. 3 POWER PLANT. SO2 REMOVAL EQUIPMENT WILL OPERATE IN CONJUNCTION WITH A HIGH EFFICIENCY ESP. THE SYSTEM, SCHEDULED FOR START-UP IN 1982, WILL UTILIZE MAGNESIUM-PROMOTED LIMESTONE AS A REAGENT IN THE FOUR MODULE WEIR FGD SYSTEM. REHEAT WILL PROBABLY NOT BE INCLUDED, SINCE THE CHIMNEY WILL BE BRICK LINED. THE DRY FIXATED SLUDGE WILL BE HAULED TO AN ACTIVE STRIP MINE. THE GROUND BREAKING HAS TAKEN PLACE.
BASIN ELECTRIC POWER COOP ANTELOPE VALLEY 1 455 MW - NEW LIGNITE; 0.68% SULFUR, 8% ASH VENDOR NOT SELECTED LIME STARTUP 11/81	THE UTILITY HAS SELECTED A LIME SCRUBBING PROCESS FOR THEIR PLANNED FGD SYSTEM. THE UNIT WILL FIRE LIGNITE COAL WITH A SULFUR CONTENT OF 0.68 PERCENT AND AN ASH CONTENT OF 8.0 PERCENT (6600 BTU/LB). THE WATER LOOP WILL BE OPEN WITH MAKE-UP COMING FROM COOLING TOWER BLOWDOWN. THE SLUDGE WILL BE DISPOSED IN A MINE LANDFILL. A CONTRACT HAS BEEN AWARDED TO WESTERN PRECIPITATION FOR A BAGHOUSE AND TO NIROLL ATOMIZER FOR A DRY FGD SYSTEM.

SECTION 2
STATUS OF FGD SYSTEMS

UNIT IDENTIFICATION	CURRENT STATUS
BASIN ELECTRIC POWER COOP ANTELOPE VALLEY 2 455 MW - NEW LIGNITE; 0.68% SULFUR, 8% ASH VENDOR NOT SELECTED PROCESS NOT SELECTED STARTUP 11/83	THE UTILITY IS TENTATIVELY INVESTIGATING VARIOUS FGD PROCESSES FOR THIS SECOND LIGNITE-FIRED UNIT SCHEDULED AT THE NEW STATION LOCATED IN MERCER COUNTY, NEAR BEULAH, NORTH DAKOTA. THIS NEW FACILITY WILL BE KNOWN AS THE ANTELOPE VALLEY STATION AND WILL BE REQUIRED TO COMPLY WITH STATE AIR EMISSION STANDARDS VIA THE BEST AVAILABLE TECHNOLOGY. START-UP IS NOW SCHEDULED FOR NOVEMBER 1983.
BASIN ELECTRIC POWER COOP LARAMIE RIVER 1 570 MW - NEW COAL: 0.8% SULFUR, 7% ASH RESEARCH COTTRELL LIMESTONE STARTUP 4/80	RESEARCH-COTTRELL IS CURRENTLY FABRICATING THE DUAL-LOOP LIMESTONE WET SCRUBBERS. ON-SITE CONSTRUCTION COMMENCED IN JANUARY 1978. SLUDGE WILL BE DEWATERED TO 83% SOLIDS BEFORE LANDFILL. THE SCRUBBERS WILL BE MADE OF STAINLESS STEEL AND WILL HANDLE 2.3 MM ACFM AT 286 F. L/G RATIO WILL BE 60. B&W HAS BEEN AWARDED A CONTRACT FOR TWO ESP'S. THE DESIGN DOES NOT INCLUDE STACK GAS REHEAT. COOLING TOWER BLOWDOWN WILL BE USED FOR MAKE-UP IN THIS CLOSED LOOP SYSTEM. CONSTRUCTION IS NOW 20 PERCENT COMPLETE.
BASIN ELECTRIC POWER COOP LARAMIE RIVER 2 570 MW - NEW COAL: 0.8% SULFUR, 7% ASH RESEARCH COTTRELL LIMESTONE STARTUP 10/80	RESEARCH-COTTRELL IS CURRENTLY FABRICATING THE DUAL-LOOP LIMESTONE WET SCRUBBERS. ON-SITE CONSTRUCTION COMMENCED IN JANUARY 1978. SLUDGE WILL BE DEWATERED TO 83% SOLIDS BEFORE LANDFILL. THE SCRUBBERS WILL BE MADE OF STAINLESS STEEL AND WILL HANDLE 2.3 MM ACFM AT 286 F. L/G RATIO WILL BE 60. B&W HAS BEEN AWARDED A CONTRACT FOR TWO ESP'S. THE DESIGN DOES NOT INCLUDE STACK GAS REHEAT. COOLING TOWER BLOWDOWN WILL BE USED FOR MAKE-UP IN THIS CLOSED LOOP SYSTEM. CONSTRUCTION IS NOW 20 PERCENT COMPLETE.
BASIN ELECTRIC POWER COOP LARAMIE RIVER 3 550 MW - NEW COAL: 0.8% SULFUR, 7% ASH VENDOR NOT SELECTED PROCESS NOT SELECTED STARTUP 4/82	THE UTILITY IS NOW IN THE PROCESS OF EVALUATING BIDS. LARAMIE RIVER STATION WILL FIRE SUB-BITUMINOUS COAL WITH THE FOLLOWING CHARACTERISTICS: 8100 BTU/LB, 0.8 PERCENT SULFUR AND 7.0 PERCENT ASH.
BIG RIVERS ELECTRIC GREEN 1 250 MW - NEW COAL; 3.75% SULFUR AMERICAN AIR FILTER LIME STARTUP 12/79	THE EMISSION CONTROL SYSTEM FOR THIS NEW COAL-FIRED UNIT IS BEING SUPPLIED BY AMERICAN AIR FILTER. THE SYSTEM WILL CONSIST OF A COLD-SIDE ESP AND TWO SPRAY TOWERS CONTROLLING PARTICULATE AND SO2 TO 99.6 PERCENT AND 90 PERCENT, RESPECTIVLEY. THE B&W BOILER WILL FIRE HIGH SULFUR (3.5 TO 4.5 PERCENT) WESTERN KENTUCKY COAL. CONSTRUCTION IS NOW 66 PERCENT COMPLETE ON THE BOILER AND 34 PERCENT COMPLETE ON THE FGD SYSTEM. THE DESIGN INCLUDES AN INDIRECT HOT AIR REHEAT SYSTEM. IUCS WILL CONSTRUCT A SLUDGE DISPOSAL SYSTEM TO SERVICE BOTH GREEN 1 AND 2.
BIG RIVERS ELECTRIC GREEN 2 240 MW - NEW COAL; 3.75% SULFUR AMERICAN AIR FILTER LIME STARTUP 12/80	THE EMISSION CONTROL SYSTEM FOR THIS NEW COAL-FIRED UNIT IS BEING SUPPLIED BY AMERICAN AIR FILTER. THE SYSTEM WILL CONSIST OF A COLD-SIDE ESP AND TWO SPRAY TOWERS CONTROLLING PARTICULATE AND SO2 TO 99.6 PERCENT AND 90 PERCENT, RESPECTIVELY. THE B&W BOILER WILL FIRE HIGH SULFUR (3.5 TO 4.5 PERCENT) WESTERN KENTUCKY COAL. THE FGD SYSTEM WILL INCLUDE AN INDIRECT HOT AIR REHEAT SYSTEM. IUCS WILL CONSTRUCT A SLUDGE DISPOSAL SYSTEM TO SERVICE BOTH GREEN 1 AND 2. THE BOILER IS CURRENTLY 8% COMPLETE AND NO WORK HAS YET STARTED ON THE FGD SYSTEM.
CENTRAL ILLINOIS LIGHT DUCK CREEK 1 400 MW - NEW COAL; 3.3% SULFUR, 8.3% ASH RILEY STOKER / ENVIRONEERING LIMESTONE STARTUP 7/78	REFER TO SECTION 3 OF THIS REPORT FOR ADDITIONAL INFORMATION. RILEY STOKER WAS THE SUPPLIER OF THE FOUR VENTURI-SORBER MODULES AT THIS UNIT. SCRUBBER TANKS AND PUMPS ARE NEOPRENE LINED. A HIGH EFFICIENCY ESP IS UPSTREAM OF THE FOUR VENTURI-SORBER SCRUBBER MODULES FOR PARTICULATE CONTROL. THE CONCRETE STACK IS LINED WITH CEILCOTE FLAKELINE 151. NO REHEAT SYSTEM IS INCLUDED. THE FIRST LIMESTONE SLURRY SCRUBBER MODULE WAS PLACED IN SERVICE ON SEPTEMBER 9, 1976, AND OPERATED INTERMITTENTLY UNTIL APRIL 1, 1977. ALL FOUR MODULES BECAME OPERATIONAL ON JULY 24, 1978.
CENTRAL ILLINOIS LIGHT DUCK CREEK 2 400 MW - NEW COAL; 3.3% SULFUR, 8.3% ASH VENDOR NOT SELECTED PROCESS NOT SELECTED STARTUP 1/82	THE UTILITY HAS NOT YET SELECTED A SYSTEM SUPPLIER. A DECISION CONCERNING THE STATUS OF THE BOILER AND CONTROL STRATEGY WILL BE ANNOUNCED IN LATE 1978. THE UTILITY WILL USE ESP'S FOR PARTICULATE CONTROL AND EITHER LIMESTONE OR DOUBLE ALKALI FOR SO2 ABSORPTION. THE UTILITY IS NOW IN THE PROCESS OF EVALUATING BIDS AND A STUDY IS UNDERWAY TO DETERMINE THE SLUDGE DISPOSAL STRATEGY THAT WILL BE EMPLOYED.

SECTION 2
STATUS OF FGD SYSTEMS

UNIT IDENTIFICATION	CURRENT STATUS
CENTRAL ILLINOIS PUBLIC SERV NEWTON 1 575 MW - NEW COAL: 4% SULFUR BUELL/ENVIROTECH DOUBLE ALKALI STARTUP 11/79	A CONTRACT HAS BEEN AWARDED BY CIPSCO TO BUELL/ENVIROTECH FOR THE INSTALLATION OF AN EMISSION CONTROL SYSTEM ON UNIT 1. THE KEY COMPONENTS OF THE EMISSION CONTROL SYSTEM INCLUDE: A HIGH-EFFICIENCY ESP; FOUR PRECOOLERS, FOUR POLYSPHERE ABSORBERS, THREE THICKENERS, TWO EXPERIMENTAL REHEAT SYSTEMS, AND THREE HORIZONTAL EXTRACTION FILTERS FOR SLUDGE DEWATERING. MORE THAN 50 PERCENT OF THE CONSTRUCTION WORK AT THE PLANT HAS BEEN COMPLETED. THE FGD SYSTEM WILL HAVE CEILCOTE-LINED ABSORBER MODULES.
CENTRAL MAINE POWER SEARS ISLAND 1 600 MW - NEW COAL: SOURCE UNDETERMINED VENDOR NOT SELECTED PROCESS NOT SELECTED STARTUP 11/86	BECAUSE OF THE DISCOVERY OF A GEOLOGICAL FAULT ON SEARS ISLAND, THE UTILITY HAS CANCELLED PLANS FOR A 1150-MW NUCLEAR POWER PLANT. A 600-MW COAL-FIRED UNIT IS NOW BEING PLANNED IN ITS PLACE. COMMERCIAL OPERATION IS PROJECTED FOR NOVEMBER 1986. COMPLIANCE WITH SO2 NSPS WILL BE ACHIEVED BY INSTALLING AN FGD SYSTEM. LIME AND LIMESTONE SCRUBBING PROCESSES ARE BEING GIVEN PRIMARY CONSIDERATION. CURRENTLY, CMPCO HAS FILED AN APPLICATION WITH THE STATE PUBLIC UTILITIES COMMISSION. AN ENVIRONMENTAL PERMIT APPLICATION WILL BE FILED WITHIN THE NEXT TWO YEARS.
CINCINNATI GAS & ELECTRIC EAST BEND 2 600 MW - NEW COAL BABCOCK & WILCOX LIME STARTUP 1/81	A CONTRACT HAS BEEN CONDITIONALLY AWARDED TO BABCOCK AND WILCOX FOR A COMMERCIAL LIME SCRUBBING SYSTEM. THE COAL SOURCE IS EXPECTED TO BE A WESTERN KENTUCKY COAL WITH A HIGH SULFUR CONTENT. THE THREE LIME SLURRY FGD MODULES WILL BE PRECEDED BY AN ESP FOR PARTICULATE CONTROL. SLUDGE WILL BE DISPOSED OF ON-SITE USING A DRY FIXATION SYSTEM. THE A-E DESIGN FIRM IS SARGENT AND LUNDY. UNIT FOUNDATION CONSTRUCTION HAS BEGUN AND FGD SYSTEM CONSTRUCTION WILL BEGIN IN EARLY 1979.
COLORADO UTE ELECTRIC ASSN. CRAIG 1 450 MW - NEW COAL: 0.45% SULFUR PEABODY ENGINEERING LIMESTONE STARTUP 3/79	PEABODY ENGINEERED SYSTEMS HAS BEEN AWARDED A CONTRACT TO DESIGN AND SUPPLY A LIMESTONE SLURRY SPRAY TOWER ABSORBER SYSTEM FOR SO2 REMOVAL FROM LOW-SULFUR COAL-FIRED BOILER FLUE GAS FOR UNITS 1 AND 2. PARTICULATE CONTROL WILL BE PROVIDED BY HOT-SIDE ESP'S UPSTREAM OF THE SCRUBBER PLANT. SLUDGE WILL BE STABILIZED AND HAULED TO A MINEFILL. THERE WILL BE A STEAM COIL TYPE STACK GAS REHEATER INCLUDED. REQUIRED PARTICULATE AND SO2 REMOVAL EFFICIENCIES ARE 99.8 AND 85 PERCENT, RESPECTIVELY. FGD SYSTEM CONSTRUCTION IS NOW 50% COMPLETE.
COLORADO UTE ELECTRIC ASSN. CRAIG 2 450 MW - NEW COAL: 0.45% SULFUR PEABODY ENGINEERING LIMESTONE STARTUP 3/79	PEABODY ENGINEERED SYSTEMS HAS BEEN AWARDED A CONTRACT TO DESIGN AND SUPPLY A LIMESTONE SLURRY SPRAY TOWER ABSORBER SYSTEM FOR SO2 REMOVAL FROM LOW-SULFUR COAL-FIRED BOILER FLUE GAS FOR UNITS 1 AND 2. PARTICULATE CONTROL WILL BE PROVIDED BY HOT-SIDE ESP'S UPSTREAM OF THE ABSORBER SYSTEM. SLUDGE WILL BE STABILIZED AND HAULED TO A MINEFILL. THERE WILL BE A STEAM COIL TYPE STACK GAS REHEATER INCLUDED. REQUIRED PARTICULATE AND SO2 REMOVAL EFFICIENCIES ARE 99.8 AND 85 PERCENT, RESPECTIVELY. FGD CONSTRUCTION IS NOW 50% COMPLETE.
COLUMBUS & SOUTHERN OHIO ELEC. CONESVILLE 5 400 MW - NEW COAL: 4.7% SULFUR, 15.1% ASH AIR CORRECTION DIVISION, UOP LIME (MG-PROMOTED) STARTUP 1/77	REFER TO SECTION 3 OF THIS REPORT FOR ADDITIONAL INFORMATION. THE BOILER AND ESP WERE COMPLETED AND PLACED IN SERVICE IN SEPT. 1976. THE B-SIDE MODULE BECAME AVAILABLE FOR SERVICE IN JANUARY 1977. COMMERCIAL OPERATIONS WERE ACHIEVED ON FEBRUARY 13, 1977. THE EMISSION CONTROL SYSTEM FOR THIS UNIT CONSISTS OF A COLD-SIDE ESP FOLLOWED BY TWO LIME TCA MODULES SUPPLIED BY UOP. DRAVO IS SUPPLYING THE THIOSORBIC LIME REAGENT. IUCS IS SUPPLYING A POZ-O-TEC SLUDGE STABILIZATION FACILITY.
COLUMBUS & SOUTHERN OHIO ELEC. CONESVILLE 6 400 MW - NEW COAL: 4.67% SULFUR, 15.1% ASH AIR CORRECTION DIVISION, UOP LIME (MG-PROMOTED) STARTUP 6/78	REFER TO SECTION 3 OF THIS REPORT FOR ADDITIONAL INFORMATON. C&SOE SIGNED LONG-TERM CONTRACTS WITH DRAVO FOR THE PURCHASE OF THIOSORBIC LIME AND WITH IUCS FOR A SLUDGE FIXATION SYSTEM. CONSTRUCTION COMMENCED IN 1977 AND WAS COMPLETED IN JANUARY 1978. SIMILAR TO UNIT 5, THIS MINE MOUTH PLANT BURNS COAL WITH 17% ASH AND 4.5 TO 4.9% SULFUR CONTENTS. THE DESIGN INCLUDES AN ESP UPSTREAM OF THE FGD SYSTEM FOR PARTICULATE CONTROL. THE FGD SYSTEM INCLUDES TWO TCA MODULES FOR THE REMOVAL OF SO2.
COLUMBUS & SOUTHERN OHIO ELEC. POSTON 5 375 MW - NEW COAL: 2.5% SULFUR VENDOR NOT SELECTED PROCESS NOT SELECTED STARTUP 0/83	THIS UNIT WILL BURN HIGH SULFUR OHIO COAL (APPROXIMATELY 2.5 PERCENT SULFUR CONTENT). THE DESIGN OF THE EMISSION CONTROL STRATEGY HAS NOT YET BEEN FINALIZED. THE PROCESS WILL EITHER BE LIME, LIMESTONE, OR DOUBLE ALKALI.

SECTION 2
STATUS OF FGD SYSTEMS

UNIT IDENTIFICATION	CURRENT STATUS
COLUMBUS & SOUTHERN OHIO ELEC. POSTON 6 375 MW - NEW COAL: 2.5% SULFUR VENDOR NOT SELECTED PROCESS NOT SELECTED STARTUP 0/85	THIS UNIT WILL BURN HIGH SULFUR COAL (APPROXIMATELY 2.5 PERCENT SULFUR CONTENT). THE DESIGN OF THE EMISSION CONTROL STRATEGY FOR THIS UNIT HAS NOT YET BEEN FINALIZED.
COMMONWEALTH EDISON POWERTON 51 425 MW - RETROFIT COAL: 3.6% SULFUR AIR CORRECTION DIVISION, UOP LIMESTONE STARTUP 3/79	THE AIR CORRECTION DIVISION OF UOP WAS AWARDED THE CONTRACT FOR A WET LIMESTONE SYSTEM THAT WILL BE BACKFITTED ONTO BOILER NO. 51, ONE OF TWO IDENTICAL BOILERS SUPPLYING STEAM TO AN 850-MW TURBINE-GENERATOR. THE SLUDGE WILL BE STABILIZED AND HAULED TO A LANDFILL. REHEAT WILL BE PROVIDED BY A STEAM COIL WHICH WILL HEAT THE AMBIENT AIR THAT IS PUMPED INTO THE SCRUBBER OUTLET BEFORE THE FLUE GAS ENTERS THE STACK. THE SO2 EMISSION STANDARD IS 1.8 LB. SO2/MM BTU. CURRENTLY, EXCAVATION, BACKFILL, AND STRUCTURAL STEEL ERECTION IS IN PROGRESS.
COOPERATIVE POWER ASSOCIATION COAL CREEK 1 545 MW - NEW LIGNITE; 0.63% SULFUR COMBUSTION ENGINEERING LIME STARTUP 2/79	THIS UNIT IS UNDER THE COMBINED OWNERSHIP OF COOP POWER AND UNITED POWER. A CONTRACT HAS BEEN AWARDED TO COMBUSTION ENGINEERING FOR THE INSTALLATION OF LIME FGD SYSTEMS ON UNITS 1 AND 2 AT THIS STATION. THE FGD SYSTEM FOR EACH BOILER WILL CONSIST OF FOUR SPRAY TOWER ABSORBER MODULES FOR SO2 REMOVAL. ELECTROSTATIC PRECIPITATORS WILL BE INSTALLED UPSTREAM OF EACH ABSORBER TRAIN. CONSTRUCTION BEGAN EARLY IN AUGUST 1977 AND THE UNIT IS 85-90% COMPLETE. BAD WINTER WEATHER SLOWED CONSTRUCTION SLIGHTLY.
COOPERATIVE POWER ASSOCIATION COAL CREEK 2 545 MW - NEW LIGNITE; 0.63% SULFUR COMBUSTION ENGINEERING LIME STARTUP 11/79	THIS UNIT IS UNDER THE COMBINED OWNERSHIP OF COOP POWER AND UNITED POWER A CONTRACT HAS BEEN AWARDED TO COMBUSTION ENGINEERING FOR THE INSTALLA- OF LIME FGD SYSTEMS ON UNITS 1 AND 2 AT THIS STATION. THE FGD SYSTEM FOR EACH BOILER WILL CONSIST OF FOUR SPRAY TOWER ABSORBER MODULES FOR SO2 REMOVAL. ELECTROSTATIC PRECIPITATORS WILL BE INSTALLED UPSTREAM OF EACH ABSORBER TRAIN. CONSTRUCTION BEGAN IN AUGUST 1977 AND THE UNIT IS NOW 45% COMPLETE. THERE HAVE BEEN MINOR DELAYS BUT START-UP IS STILL SCHEDULED FOR NOVEMBER 1979.
DELMARVA POWER & LIGHT DELWARE CITY 1, 2 & 3 180 MW - RETROFIT COKE; 7.5% SULFUR DAVY POWERGAS WELLMAN LORD STARTUP 4/80	DELMARVA'S DELAWARE CITY PLANT HAS 4 BOILERS, 3 OF WHICH HAVE STEAM CAPACITIES OF 500K LBS/HR EACH. THE BOILERS GENERATE STEAM AS WELL AS ELECTRICAL POWER FOR GETTY REFINING & MARKETING. 7-8% S COKE WILL BE BURNED IN THE BOILERS (INSTEAD OF THE LOW-S CRUDE OIL NOW BURNED) WHEN THE CONTROL SYSTEM GOES INTO OPERATION IN APRIL 1980. DELMARVA WILL USE VENTURI SCRUBBERS FOR PARTICULATE REMOVAL AND WELLMAN LORD FGD SYSTEMS AT EACH BOILER GAS EXIT FOR SO2 CONTROL. DESIGN PARTICULATE AND SO2 REMOVAL EFFICIENCIES ARE 90 AND 85-90 PERCENT RESPECTIVELY. CONSTRUCTION IS 11% COMPLETE.
DUQUESNE LIGHT ELRAMA POWER STATION 510 MW - RETROFIT COAL; 2% SULFUR, 16.5% ASH CHEMICO LIME STARTUP 10/75	REFER TO SECTION 3 OF THIS REPORT FOR ADDITIONAL INFORMATION. THE FGD SYSTEM ON THIS 4-BOILER UNIT CONSISTS OF FIVE COMMON-HEADERED SINGLE STAGE VENTURI SCRUBBER-ABSORBERS DOWNSTREAM FROM A MECHANICAL COLLECTOR-ESP PARTICULATE REMOVAL SYSTEM. THE PLANT BURNS COAL WITH A HEATING VALUE OF 11,000 BTU/LB AND SULFUR AND ASH CONTENTS OF 1.8 TO 2.2% AND 21% RESPECTIVELY. DEWATERED SLUDGE FROM THE IUCS PLANT IS HAULED TO AN OFF-SITE LANDFILL. THE SYSTEM INCLUDES A DIRECT OIL-FIRED STACK GAS REHEAT SYSTEM. DESIGNED REMOVAL EFFICIENCIES ARE 99% (PART) AND 83% (SO2).
DUQUESNE LIGHT PHILLIPS POWER STATION 410 MW - RETROFIT COAL; 2% SULFUR, 16.5% ASH CHEMICO LIME STARTUP 7/73	REFER TO SECTION 3 OF THIS REPORT FOR ADDITIONAL INFORMATION. THE FGD SYSTEM ON THIS 6-BOILER UNIT CONSISTS OF ONE 2-STAGE AND THREE SINGLE STAGE VENTURI SCRUBBER-ABSORBERS DOWNSTREAM FROM A MECHANICAL COLLECTOR-ESP PARTICULATE REMOVAL SYSTEM. THE PLANT BURNS COAL WITH A HEATING VALUE OF 11,000 BTU/LB AND SULFUR AND ASH CONTENTS OF 1.8 TO 2.2% AND 21% RESPECTIVELY. DEWATERED SLUDGE FROM THE IUCS PLANT IS HAULED TO AN OFF-SITE LANDFILL. THE SYSTEM INCLUDES A DIRECT OIL-FIRED STACK GAS REHEAT SYSTEM. DESIGNED REMOVAL EFFICIENCIES ARE 99% (PART) AND 83% (SO2).
EAST KENTUCKY POWER COOP SPURLOCK 2 500 MW - NEW COAL ADL/COMBUSTION EQUIP ASSOCIATE LIME STARTUP 3/80	A CONTRACT HAS BEEN AWARDED TO ADL/COMBUSTION EQUIP ASS. FOR A LIME SLURRY FGD SYSTEM ON THE NEW 500-MW UNIT SPURLOCK 2. PARTICULATE WILL BE CONTROLLED BY A 99.5% EFFICIENT ESP. COOLING TOWER BLOWDOWN WILL BE THE MAKE-UP SOURCE FOR THE FGD SYSTEM. THE DESIGNED SO2 REMOVAL EFFICIENCY IS 90%.

SECTION 2
STATUS OF FGD SYSTEMS

UNIT IDENTIFICATION	CURRENT STATUS
GENERAL PUBLIC UTILITIES COHO 1 800 MW - NEW COAL; 3.5% SULFUR VENDOR NOT SELECTED PROCESS NOT SELECTED STARTUP 5/87	STARTUP DATE WAS CHANGED TO 5/87 FOR BOTH BOILER AND DESULFURIZATION SYSTEM LIME AND LIMESTONE SCRUBBING ARE THE PRIMARY STRATEGIES BEING CONSIDERED FOR COMPLIANCE WITH NEW SOURCE PERFORMANCE STANDARDS. NO DECISION HAS BEEN MADE YET, ALTHOUGH A SLURRY TYPE SYSTEM IS NOT CONTEMPLATED.
GENERAL PUBLIC UTILITIES SEWARD 7 800 MW - NEW COAL VENDOR NOT SELECTED PROCESS NOT SELECTED STARTUP 5/84	STARTUP DATE WAS CHANGED TO 5/84 FOR BOTH BOILER AND DESULFURIZATION SYSTEM LIME AND LIMESTONE SCRUBBING ARE THE PRIMARY STRATEGIES BEING CONSIDERED FOR COMPLIANCE WITH NEW SOURCE PERFORMANCE STANDARDS. NO DECISION HAS BEEN MADE YET, ALTHOUGH SLURRY TYPE WILL NOT BE USED.
GULF POWER SCHOLZ 1B & 2B 23 MW - RETROFIT COAL; 2% SULFUR CHIYODA INTERNATIONAL LIMESTONE STARTUP 8/78	REFER TO SECTION 3 OF THIS REPORT FOR ADDITIONAL INFORMATION. CHIYODA INTERNATIONAL SUPPLIED THIS 23 MW PROTOTYPE UNIT WHICH BEGAN OPERATION ON AUGUST 30, 1978. THE CT-121 SYSTEM INCLUDES A NEWLY DEVELOPED JET BUBBLING REACTOR WHICH FEATURES A LARGE GAS-LIQUID INTERFACIAL AREA AND PROVIDES PARTICULATE AS WELL AS SO2 REMOVAL. MIST ELIMINATION IS PROVIDED BY A DOUBLE PASS VERTICAL CHEVRON. GYPSUM IS PRODUCED AND STACKED IN THE EXISTING POND. THE STACKING CAPABILITIES OF THE GYPSUM ARE BEING TESTED ALONG WITH THE GROUND WATER NEAR THE STACK SITE TO CHECK FOR LEECHING.
HOOSIER ENERGY MEROM 1 490 MW - NEW COAL; 3.5% SULFUR MITSUBISHI INTERNATIONAL LIMESTONE STARTUP 4/81	HOOSIER ENERGY HAS AWARDED A CONTRACT TO MITSUBISHI INTERNATIONAL CORP. FOR TWO LIMESTONE FGD SYSTEMS FOR MEROM 1 AND 2. THE NEW 490 MW COAL-FIRED UNITS ARE PLANNED FOR LOCATION IN SULLIVAN, INDIANA. THE FLUE GAS STREAMS WILL BE CLEANED OF PARTICULATES WITH ESP'S (99.4%) AND OF SULFUR DIOXIDE WITH GRID-TOWER ABSORBERS (90%). SLUDGE WILL BE STABILIZED AND STOCK PILED. THE GROUND WAS BROKEN FOR CONSTRUCTION IN NOVEMBER 1977, BUT DUE TO THE BAD WINTER WEATHER, CONSTRUCTION WAS DELAYED. CONSTRUCTION HAS PROCEEDED ACCORDING TO SCHEDULE THROUGH THE SUMMER.
HOOSIER ENERGY MEROM 2 490 MW - NEW COAL; 3.5% SULFUR MITSUBISHI INTERNATIONAL LIMESTONE STARTUP 1/82	HOOSIER ENERGY HAS AWARDED A CONTRACT TO MITSUBISHI INTERNATIONAL CORP. FOR TWO LIMESTONE FGD SYSTEMS FOR MEROM 1 AND 2. THE NEW 490 MW COAL-FIRED UNITS ARE PLANNED FOR LOCATION IN SULLIVAN, INDIANA. THE FLUE GAS STREAMS WILL BE CLEANED OF PARTICULATES WITH ESP'S (99.4%) AND OF SULFUR DIOXIDE WITH GRID-TOWER ABSORBERS (90%). SLUDGE WILL BE STABILIZED AND STOCK PILED. THE GROUND WAS BROKEN FOR CONSTRUCTION IN NOVEMBER 1977, BUT DUE TO THE BAD WINTER WEATHER, CONSTRUCTION WAS DELAYED. THE BOILER IS ESSENTALLY COMPLETE. STARTUP IS EXPECTED SHORTLY.
INDIANAPOLIS POWER & LIGHT PETERSBURG 3 530 MW - NEW COAL; 3.25% SULFUR, 9.5% ASH AIR CORRECTION DIVISION, UOP LIMESTONE STARTUP 10/77	REFER TO SECTION 3 OF THIS REPORT FOR ADDITIONAL INFORMATION. THE WET LIMESTONE FGD SYSTEM INSTALLED ON THIS UNIT WAS SUPPLIED BY THE AIR CORRECTION DIVISION OF UOP. UNIT 3 FIRES BITUMINOUS COAL HAVING A SULFUR CONTENT OF 3.0-3.5%, AN ASH CONTENT OF 9-10% AND A 11,000 BTU/LB HEATING VALUE. TWO ESPS PROVIDE PRIMARY PARTICULATE CONTROL UPSTREAM OF A FOUR-MODULE TCA FGD SYSTEM. STABILIZED SLUDGE IS DISPOSED ON AN ON-SITE POND. THE DESIGN INCLUDES AN INDIRECT STEAM TUBE REHEAT SYSTEM. SHAKEDOWN-DEBUGGING OPERATIONS ARE STILL PROCEDING.
INDIANAPOLIS POWER & LIGHT PETERSBURG 4 530 MW - NEW COAL; 3.5% SULFUR, 10% ASH RESEARCH COTTRELL LIMESTONE STARTUP 4/82	INDIANAPOLIS POWER & LIGHT AWARDED A CONTRACT TO RESEARCH COTTRELL FOR A LIMESTONE FGD SYSTEM. SO2 REMOVAL EFFICIENCY WILL BE APPROXIMATELY 80 PERCENT. THIS NEW UNIT WILL FIRE HIGH-SULFUR SUBBITUMINOUS COAL WITH A HEATING VALUE OF 11,000 BTU/LB AND ASH AND SULFUR CONTENTS OF 10 PERCENT AND 3.5 PERCENT, RESPECTIVELY. SLUDGE WILL BE DEWATERED AND MIXED WITH FLYASH TO PRODUCE A DRY STABILIZED PRODUCT. PLANT CONSTRUCTION BEGAN IN DECEMBER 1977.
KANSAS CITY POWER & LIGHT HAWTHORN 3 100 MW - RETROFIT COAL; 2% SULFUR, 12.5% ASH COMBUSTION ENGINEERING LIME STARTUP 11/72	REFER TO SECTION 3 OF THIS REPORT FOR ADDITIONAL INFORMATION. THE SCRUBBER-ABSORBER SYSTEM ON THIS UNIT WAS CONVERTED FROM A LIMESTONE FURNACE INJECTION AND TAIL-END SYSTEM TO A TAIL-END LIME SLURRY SYSTEM. OPERATION IN THE LIME SCRUBBING MODE COMMENCED ON FEBRUARY 7, 1977. COMPLIANCE TEST RESULTS INDICATED THE UNIT MEETS THE KANSAS CITY 0.17 LB/MM BTU PARTICULATE REG. FGD SYSTEM DESIGN INCLUDES A FINNED-TUBE STEAM REHEATER, AN ON-SITE UNLINED SLUDGE DISPOSAL POND, AND A CHEVRON MIST ELIMINATOR SYSTEM. THE 2 FGD MODULES CAN BE BY-PASSED IN EMERGENCIES.

SECTION 2
STATUS OF FGD SYSTEMS

UNIT IDENTIFICATION	CURRENT STATUS
KANSAS CITY POWER & LIGHT HAWTHORN 4 100 MW - RETROFIT COAL: 2% SULFUR, 12.5% ASH COMBUSTION ENGINEERING LIME STARTUP 8/72	REFER TO SECTION 3 OF THIS REPORT FOR ADDITIONAL INFORMATION. THE SCRUBBER-ABSORBER SYSTEM ON THIS UNIT WAS CONVERTED FROM A LIMESTONE FURNACE INJECTION AND TAIL-END SYSTEM TO A TAIL-END LIME SLURRY SYSTEM. OPERATION IN THE LIME SCRUBBING MODE COMMENCED ON JANUARY 1, 1977. COMPLIANCE TEST RESULTS INDICATED THE UNIT MEETS THE KANSAS CITY 0.17 LB/MM BTU PARTICULATE REG. FGD SYSTEM DESIGN INCLUDES A FINNED-TUBE STEAM REHEATER, AN ON-SITE UNLINED SLUDGE DISPOSAL POND , AND A CHEVRON MIST ELIMINATOR SYSTEM. THE 2 FGD MODULES CAN BE BY-PASSED IN EMERGENCIES.
KANSAS CITY POWER & LIGHT LA CYGNE 1 820 MW - NEW COAL: 5% SULFUR, 25% ASH BABCOCK & WILCOX LIMESTONE STARTUP 2/73	REFER TO SECTION 3 OF THIS REPORT FOR ADDITIONAL INFORMATION. THE EMISSION CONTROL SYSTEM FOR THIS NEW COAL-FIRED POWER-GENERATING UNIT CONSISTS OF EIGHT SCRUBBER MODULES FOR FLY ASH AND SO2 REMOVAL. EACH MODULE INCLUDES A VENTURI SCRUBBER IN SERIES WITH A 2-STAGE IMPINGEMENT PLATE ABSORBER. THE SCRUBBER PLANT IS AN INTEGRAL PART OF THE POWER-GENERATING COMPLEX, ALLOWING NO FLUE GAS BYPASS. INITIAL OPERATIONS COMMENCED IN FEB. 1973. COMMERCIAL SERVICE WAS ATTAINED BY JUNE 1973.
KANSAS POWER & LIGHT JEFFREY 1 680 MW - NEW COAL: 0.3% SULFUR, 7.5% ASH COMBUSTION ENGINEERING LIMESTONE STARTUP 8/78	REFER TO SECTION 3 OF THIS REPORT FOR ADDITIONAL INFORMATION. COMBUSTION ENGINEERING SUPPLIED THE LIMESTONE EMISSION CONTROL SYSTEM FOR THIS NEW COAL FIRED UNIT. THE SYSTEM CONSISTS OF A COLD-SIDE ESP AND SPRAY TOWERS FOR THE CONTROL OF SO2 AND PARTICULATE EMISSIONS. 30% OF THE FLUE GAS IS BYPASSED FOR REHEAT. NOX EMISSIONS ARE CONTROLLED BY AN AIR OVERFIRE SYSTEM AT THE TANGENTIALLY FIRED PULVERIZED BURNERS. THE CLEANED GASES ARE VENTED TO A 600 FT STACK. SLUDGE IS MIXED WITH BOTTOM ASH AND DISPOSED OF IN THE EXISTING ON-SITE BOTTOM ASH POND.
KANSAS POWER & LIGHT JEFFREY 2 680 MW - NEW COAL: 0.3% SULFUR, 7.5% ASH COMBUSTION ENGINEERING LIMESTONE STARTUP 6/80	COMBUSTION ENGINEERING IS SUPPLYING THE EMISSION CONTROL SYSTEM FOR THIS NEW COAL FIRED UNIT. THE SYSTEM WILL CONSIST OF A COLD SIDE ESP ALONG WITH SPRAY TOWERS FOR THE CONTROL OF SO2 AND PARTICULATE EMISSIONS. 30% OF THE FLUE GAS WILL BE BYPASSED FOR REHEAT. AN OVERFIRE AIR SYSTEM AT THE TANGENTIAL FIRED PULVERIZED BURNERS WILL CONTROL NOX EMISSIONS. THE CLEANED GASES WILL BE VENTED TO A 600 FT STACK. SLUDGE WILL BE MIXED WITH BOTTOM ASH AND DISPOSED ON-SITE IN THE BOTTOM ASH POND. THE SYSTEM STEEL WORK IS UP AND CONSTRUCTION IS APPROXIMATELY 10% COMPLETE.
KANSAS POWER & LIGHT LAWRENCE 4 125 MW - RETROFIT COAL: 0.5% SULFUR, 10% ASH COMBUSTION ENGINEERING LIMESTONE STARTUP 12/68	REFER TO SECTION 3 OF THIS REPORT FOR ADDITIONAL INFORMATION. THE NEW LIMESTONE FGD SYSTEM COMMENCED OPERATIONS IN EARLY JANUARY 1977. THE NEW SYSTEM REPLACED MARBLE-BED TOWERS WITH SPRAY TOWERS. THERE HAVE BEEN NO FORCED SCRUBBER OUTAGES REPORTED SINCE START-UP. CONTINUOUS SO2 MONITORS HAVE RECORDED SO2 REMOVAL EFFICIANCIES OF BETTER THAN 85%. THE UTILITY REPORTED PARTICULATE REMOVAL IS SUCH THAT NO VISIBLE PLUME EXITS THE STACK THE PLANT IS FIRING COAL RATED AT 10,000 BTU/LB WITH A SULFUR CONTENT OF 0.5%.
KANSAS POWER & LIGHT LAWRENCE 5 400 MW - NEW COAL: 0.5% SULFUR, 10% ASH COMBUSTION ENGINEERING LIMESTONE STARTUP 11/71	REFER TO SECTION 3 OF THIS REPORT FOR ADDITIONAL INFORMATION. THE ORIGINAL LIMESTONE INJECTION AND TAIL-END SCRUBBING SYSTEM WAS SHUT DOWN ON MARCH 20 SO THAT THE NEW ROD-SCRUBBER AND SPRAY TOWER ABSORBER SYSTEM COULD BE TIED INTO THE UNIT. THE NEW SYSTEM, WHICH INCLUDES TWO MODULES, EACH CAPABLE OF HANDLING APPROXIMATELY 50 PERCENT OF THE TOTAL BOILER FLUE GAS FLOW, CAME ON LINE ON APRIL 14, 1978. THE SYSTEM DESIGNER AND SUPPLIER IS COMBUSTION ENGINEERING. THE UNIT FIRES LOW SULFUR WYOMING COAL WITH A HEAT CONTENT OF 10,000 BTU/LB.
KENTUCKY UTILITIES GREEN RIVER 1,2 & 3 64 MW - RETROFIT COAL: 3.7% SULFUR, 11.0% ASH AMERICAN AIR FILTER LIME STARTUP 9/75	REFER TO SECTION 3 OF THIS REPORT FOR ADDITIONAL INFORMATION. THE SCRUBBER PLANT INSTALLED AT THIS STATION CONSISTS OF ONE MODULE DESIGNED TO REMOVE PARTICULATE (VARIABLE-THROAT VENTURI) AND SO2 (MOBILE -BED CONTACTOR) FROM COAL-FIRED BOILER FLUE GAS. THE SCRUBBER WAS DESIGNED AND SUPPLIED BY AAF. SLUDGE IS DISPOSED IN AN ON-SITE UNLINED POND. THE COAL BURNED HAS SULFUR AND ASH CONTENTS OF 3.7 AND 11 PERCENT RESPECTIVELY AND A MOISTURE CONTENT OF 6-10 PERCENT. INITIAL STARTUP OCCURRED IN SEPTEMBER 1975. COMMERCIAL OPERATION BEGAN IN JANUARY 1976.
LAKELAND UTILITIES MCINTOSH 3 350 MW - NEW COAL: 2.6% SULFUR, 10% ASH BABCOCK & WILCOX LIMESTONE STARTUP 10/81	THE CITY OF LAKELAND DEPARTMENT OF ELECTRIC AND WATER UTILITIES AWARDED A CONTRACT TO B&W FOR AN EMISSION CONTROL SYSTEM ON THE UTILITY'S NEW 350-MW POWER GENERATING UNIT, MCINTOSH 3. THE UNIT WILL UTILIZE COLD SIDE ESP'S FOR PARTICULATE REMOVAL AND TWO LIMESTONE SCRUBBER-ABSORBER MODULES. START-UP IS SCHEDULED FOR OCTOBER 1981. THE COAL WILL CONTAIN ABOUT 2.5% SULFUR. THE UNIT DESIGN INCLUDES A REHEAT AND AN IUCS SLUDGE DISPOSAL SYSTEM. CONSTRUCTION SHOULD BEGIN IN THE FIRST PART OF 1979.

SECTION 2
STATUS OF FGD SYSTEMS

UNIT IDENTIFICATION	CURRENT STATUS
LOUISVILLE GAS & ELECTRIC CANE RUN 4 178 MW - RETROFIT COAL: 3.75% SULFUR, 15.5% ASH AMERICAN AIR FILTER LIME (CARBIDE) STARTUP 8/76	REFER TO SECTION 3 OF THIS REPORT FOR ADDITIONAL INFORMATION. THE FGD SYSTEM RETROFITTED ON THIS BOILER WAS DESIGNED AND SUPPLIED BY AMERICAN AIR FILTER AND WAS FIRST PLACED IN THE GAS PATH ON AUGUST 7, 1976. THE SYSTEM CONSISTS OF TWO PARALLEL MODULES WHICH INCLUDE MOBILE BED CONTACTORS AND OPERATE WITH A CARBIDE LIME ADDITIVE. FOLLOWING A NUMBER OF MAJOR SYSTEM MODIFICATIONS (CHEVRON-TYPE MIST ELIMINATOR, OIL FIRED REHEAT, PLASITE DUCT LINER, HIGHER L/G), THE SYSTEM SUCCESSFULLY PASSED COMPLIANCE TESTING (85% SO2 REMOVAL) ON AUGUST 3 AND 4, 1977.
LOUISVILLE GAS & ELECTRIC CANE RUN 5 183 MW - RETROFIT COAL: 3.75% SULFUR, 15.5% ASH COMBUSTION ENGINEERING LIME (CARBIDE) STARTUP 12/77	REFER TO SECTION 3 OF THIS REPORT FOR ADDITIONAL INFORMATION. THE FGD SYSTEM FOR THIS UNIT WAS DESIGNED AND SUPPLIED BY COMBUSTION ENGINEERING. IT CONSISTS OF TWO SPRAY TOWER ABSORBERS FOR FULL-LOAD SO2 REMOVAL AND UTILIZES CARBIDE LIME AS THE ABSORBING REAGENT. IN-LINE STEAM REHEAT, A COMMON REACTION TANK, AND A THICKENER FOR SOLIDS DEWATERING ARE INCLUDED. AN EXISTING UPSTREAM ESP PROVIDES PRIMARY PARTICULATE CONTROL. THE FGD SYSTEM BEGAN INITIAL OPERATION IN DEC. '77 BUT A COAL STRIKE FORCED A PLANT SHUTDOWN. THE SYSTEM WAS RE-STARTED MARCH 24, 1978.
LOUISVILLE GAS & ELECTRIC CANE RUN 6 277 MW - RETROFIT COAL: 3.75% SULFUR, 15.5% ASH ADL/COMBUSTION EQUIP ASSOCIATE DOUBLE ALKALI STARTUP 12/78	THE CONTRACT FOR THIS FULL-SCALE DEMONSTRATION FGD SYSTEM HAS BEEN AWARDED TO A.D.LITTLE/COMBUSTION EQUIPMENT ASSOC. FOR THE INSTALLATION OF A DOUBLE ALKALI SYSTEM. THE FEDERAL EPA WILL SUBSIDIZE A MAXIMUM $4.5 MM FOR OPERATION, RESEARCH AND DEVELOPMENT, AND REPORT WRITING FOR A ONE-YEAR PERIOD FOLLOWING THE FIRST THREE MONTHS OF OPERATION (NOTE:THIS SUBSIDY WILL NOT BE APPLIED FOR ANY CAPITAL EXPENDITURES). CONSTRUCTION AT THIS UNIT IS PRESENTLY 85% COMPLETE. UNIT START-UP IS EXPECTED TO BE IN DECEMBER 1978.
LOUISVILLE GAS & ELECTRIC MILL CREEK 1 330 MW - RETROFIT COAL: 3.75% SULFUR, 15.5% ASH COMBUSTION ENGINEERING LIME/LIMESTONE STARTUP 1/81	A COMPLIANCE SCHEDULE WAS SUBMITTED TO THE JEFFERSON COUNTY AIR POLLUTION CONTROL DISTRICT WITH 4/81 ESTABLISHED AS THE STARTUP DATE FOR AN FGD SYSTEM. OPERATING DATA AND INFORMATION FROM THE FULL-SCALE SCRUBBER PLANT NOW IN SERVICE ON THE NO.4 UNIT AT CANE RUN WILL BE OBTAINED BEFORE THE UTILITY PROCEEDS WITH ADDITIONAL SYSTEM DESIGN WORK. A CONTRACT WAS AWARDED TO COMBUSTION ENGINEERING FOR A LIME/LIMESTONE FGD SYSTEM.
LOUISVILLE GAS & ELECTRIC MILL CREEK 2 330 MW - RETROFIT COAL: 3.75% SULFUR, 15.5% ASH COMBUSTION ENGINEERING LIME/LIMESTONE STARTUP 1/82	A COMPLIANCE SCHEDULE HAS BEEN SUBMITTED TO THE JEFFERSON COUNTY AIR POLLUTION CONTROL DISTRICT WITH 4/82 ESTABLISHED AS THE STARTUP DATE FOR AN FGD SYSTEM. OPERATING DATA AND INFORMATION FROM THE FULL-SCALE SCRUBBER PLANT NOW IN SERVICE ON THE NO.4 UNIT AT CANE RUN WILL BE OBTAINED BEFORE THE UTILITY PROCEEDS WITH ADDITIONAL SYSTEM DESIGN WORK. A CONTRACT WAS AWARDED TO COMBUSTION ENGINEERING FOR A LIME/LIMESTONE FGD SYSTEM.
LOUISVILLE GAS & ELECTRIC MILL CREEK 3 425 MW - NEW COAL: 3.75% SULFUR, 15.5% ASH AMERICAN AIR FILTER LIME (CARBIDE) STARTUP 8/78	REFER TO SECTION 3 OF THIS REPORT FOR ADDITIONAL INFORMATION. THE SYSTEM WAS DESIGNED AND SUPPLIED BY AMERICAN AIR FILTER AND UTILIZES CARBIDE LIME AS THE ABSORBENT. FOUR MOBILE-BED ABSORBERS TREAT THE FLUE GAS RESULTING FROM THE COMBUSTION OF HIGH SULFUR COAL. THE SYSTEM OPERATES IN AN OPEN WATER LOOP. THE SCRUBBING WASTE IS STABILIZED WITH FLYASH AND LIME. THE UNIT BECAME OPERATIONAL ON AUGUST 13, 1978.
LOUISVILLE GAS & ELECTRIC MILL CREEK 4 495 MW - NEW COAL: 3.75% SULFUR, 15.5% ASH AMERICAN AIR FILTER LIME STARTUP 6/80	BECAUSE POWER DEMAND HAS NOT COME UP AS RAPIDLY AS HAD BEEN EXPECTED, UNIT START-UP HAS BEEN MOVED BACK TO JUNE 1980. CONSTRUCTION OF THIS NEW 495-MW COAL-FIRED UNIT IS ON SCHEDULE. CURRENTLY, FOUNDATION WORK IS IN PROGRESS. THIS AAF SYSTEM WILL INCLUDE MOBILE-BED ABSORBERS TREATING HIGH SULFUR COAL FLUE GAS. THE SYSTEMS WATER LOOP WILL BE CLOSED. THE SLUDGE WILL BE STABILIZED WITH LIME AND FLYASH. STEAM REHEAT WILL PROVIDE GAS TEMPERATURE ELEVATION OF THE SCRUBBED GASES PRIOR TO DISCHARGE TO THE MAIN STACK.
LOUISVILLE GAS & ELECTRIC PADDYS RUN 6 65 MW - RETROFIT COAL: 3.75% SULFUR, 15.5% ASH COMBUSTION ENGINEERING LIME (CARBIDE) STARTUP 4/73	REFER TO SECTION 3 OF THIS REPORT FOR ADDITIONAL INFORMATION. THIS SCRUBBING SYSTEM WAS DESIGNED BY COMBUSTION ENGINEERING AND PLACED IN SERVICE IN APRIL 1973. THE FGD SYSTEM CONSISTS OF TWO 2-STAGE MARBLE BED ABSORBERS WHICH ARE DESIGNED TO USE CARBIDE LIME ADDITIVE AS THE SCRUBBING REAGENT. PADDYS RUN NO. 6 IS A PEAK-LOAD UNIT THAT OPERATES ONLY DURING DEMAND PERIODS. AN EXTENSIVE EPA SCRUBBER/SLUDGE EVALUATION STUDY WAS COMPLETED IN AUGUST 1977. THIS UNIT WILL BE RETIRED WHEN MILL CREEK 3 BECOMES FULLY OPERATIONAL.

SECTION 2
STATUS OF FGD SYSTEMS

UNIT IDENTIFICATION	CURRENT STATUS
MINNESOTA POWER & LIGHT CLAY BOSWELL 4 500 MW - NEW COAL: 0.8% SULFUR, 9% ASH PEABODY ENGINEERING LIME/ALKALINE FLYASH STARTUP 5/80	MINNESOTA P & L HAS AWARDED A CONTRACT TO PEABODY ENGINEERING FOR A LIME/ ALKALINE FLYASH SCRUBBING SYSTEM. THE CONFIGURATION WILL BE VENTURI SCRUBBERS FOLLOWED BY SPRAY TOWERS. HOT SIDE ESP'S WILL BE USED FOR PARTICULATE CONTROL. STACK GAS REHEAT WILL BE ACCOMPLISHED BY BYPASSING 5% OF FLUE GAS AROUND THE SCRUBBER. THE UNIT WILL FIRE SUB-BITUMINOUS COLSTRIP COAL WITH A SULFUR CONTENT OF 0.8%, AND AN ASH CONTENT OF 9.0% (HEATING VALUE - 8300 BTU/LB). MAKE-UP WATER SOURCE WILL BE THE RIVER AND THE CLAY-LINED POND. CONSTRUCTION OF THE FGD SYSTEM IS ABOUT 20% COMPLETE.
MINNKOTA POWER COOPERATIVE MILTON R. YOUNG 2 450 MW - NEW LIGNITE; 0.7% SULFUR, 8.0% ASH ADL/COMBUSTION EQUIP ASSOCIATE LIME/ALKALINE FLYASH STARTUP 9/77	REFER TO SECTION 3 OF THIS REPORT FOR ADDITIONAL INFORMATION. THIS LIME/ALKALINE FLYASH SCRUBBING SYSTEM WAS DESIGNED AND SUPPLIED BY ADL/COMBUSTION EQUIPMENT ASSOCIATES. IT CONSISTS OF A COLD-SIDE ESP FOLLOWED BY TWO SPRAY TOWERS. THE DESIGN INCLUDES A WASH TRAY AND A CHEVRON MIST ELIMINATOR. 15% FLUE GAS BYPASS PROVIDES STACK GAS REHEAT. THE UNIT FIRES A LOW-SULFUR NORTH DAKOTA LIGNITE WITH AN AVERAGE ASH CONTENT OF 8 PERCENT, SULFUR CONTENT OF 0.7 PERCENT, AND HEAT CONTENT OF 6500 BTU/LB. THE FLY ASH ALKALINITY IS USED AS THE PRIMARY SO2 REAGENT.
MONTANA POWER COLSTRIP 1 360 MW - NEW COAL; 0.8% SULFUR, 12% ASH ADL/COMBUSTION EQUIP ASSOCIATE LIME/ALKALINE FLYASH STARTUP 11/75	REFER TO SECTION 3 OF THIS REPORT FOR ADDITIONAL INFORMATION. THIS FGD EQUIPPED UNIT WAS DECLARED COMMERCIAL IN NOVEMBER 1975. THE SCRUBBING SYSTEM PROVIDES PARTICULATE AND SO2 CONTROL WITH THREE SCRUBBER MODULES. EACH MODULE CONSISTS OF A DOWNFLOW VENTURI SCRUBBER CENTERED WITHIN AN UPFLOW SPRAY TOWER ABSORBER. EACH MODULE CAN TREAT 40% OF THE TOTAL BOILER FLUE GAS AND THE MODULES CANNOT BE BYPASSED. THE UNSTABILIZED SLUDGE IS DISPOSED IN AN ON-SITE LINED DISPOSAL POND. IN-LINE STEAM REHEAT AND CLOSED WATER LOOP CAPABILITY ARE INCLUDED IN THE SYSTEM.
MONTANA POWER COLSTRIP 2 360 MW - NEW COAL; 0.8% SULFUR, 12% ASH ADL/COMBUSTION EQUIP ASSOCIATE LIME/ALKALINE FLYASH STARTUP 8/76	REFER TO SECTION 3 OF THIS REPORT FOR ADDITIONAL INFORMATION. THIS FGD EQUIPPED UNIT WAS DECLARED COMMERCIAL IN AUGUST 1976. THE SCRUBBING SYSTEM PROVIDES PARTICULATE AND SO2 CONTROL WITH THREE SCRUBBER MODULES. EACH MODULE CONSISTS OF A DOWNFLOW VENTURI SCRUBBER CENTERED WITHIN AN UPFLOW SPRAY TOWER ABSORBER. EACH MODULE CAN TREAT 40% OF THE TOTAL BOILER FLUE GAS AND THE MODULES CANNOT BE BYPASSED. THE UNSTABILIZED SLUDGE IS DISPOSED IN AN ON-SITE LINED DISPOSAL POND. IN-LINE STEAM REHEAT AND CLOSED WATER LOOP CAPABILITY ARE INCLUDED IN THE SYSTEM.
MONTANA POWER COLSTRIP 3 700 MW - NEW COAL; 0.7% SULFUR ADL/COMBUSTION EQUIP ASSOCIATE LIME/ALKALINE FLYASH STARTUP 7/80	A CONTRACT FOR THE INSTALLATION OF TWO ADDITIONAL LIME/ALKALINE FLYASH SCRUBBING SYSTEMS HAS BEEN AWARDED TO A.D. LITTLE/COMBUSTION EQUIPMENT ASSOCIATES. THESE SYSTEMS WILL BE INSTALLED ON UNITS 3 AND 4 OF THE COLSTRIP POWER STATION. COLSTRIP UNITS 1 AND 2 ARE BOTH EQUIPPED WITH OPERATIONAL LIME/ALKALINE FLYASH SCRUBBING SYSTEMS FOR THE REMOVAL OF PARTICULATES AND SULFUR DIOXIDE.
MONTANA POWER COLSTRIP 4 700 MW - NEW COAL; 0.7% SULFUR ADL/COMBUSTION EQUIP ASSOCIATE LIME/ALKALINE FLYASH STARTUP 7/81	A CONTRACT FOR THE INSTALLATION OF TWO ADDITIONAL LIME/ALKALINE FLYASH SCRUBBING SYSTEMS HAS BEEN AWARDED TO A.D. LITTLE/COMBUSTION EQUIPMENT ASSOCIATES. THESE SYSTEMS WILL BE INSTALLED ON UNITS 3 AND 4 OF THE COLSTRIP POWER STATION. COLSTRIP UNITS 1 AND 2 ARE BOTH EQUIPPED WITH OPERATIONAL LIME/ALKALINE FLYASH SCRUBBING SYSTEMS FOR THE REMOVAL OF PARTICULATES AND SULFUR DIOXIDE.
NEVADA POWER HARRY ALLEN 1 500 MW - NEW COAL VENDOR NOT SELECTED PROCESS NOT SELECTED STARTUP 6/85	CONSIDERING HOT SIDE ESP IN CONJUNCTION WITH AN FGD SYSTEM. SPECIFICATIONS HAVE NOT YET BEEN PREPARED.
NEVADA POWER HARRY ALLEN 2 500 MW - NEW COAL VENDOR NOT SELECTED PROCESS NOT SELECTED STARTUP 6/86	CONSIDERING HOT SIDE ESP IN CONJUNCTION WITH AN FGD SYSTEM. SPECIFICATIONS HAVE NOT YET BEEN PREPARED.

SECTION 2
STATUS OF FGD SYSTEMS

UNIT IDENTIFICATION	CURRENT STATUS
NEVADA POWER HARRY ALLEN 3 500 MW - NEW COAL VENDOR NOT SELECTED PROCESS NOT SELECTED STARTUP 6/87	CONSIDERING HOT SIDE ESP IN CONJUNCTION WITH AN FGD SYSTEM. SPECIFICATIONS HAVE NOT YET BEEN PREPARED.
NEVADA POWER HARRY ALLEN 4 500 MW - NEW COAL VENDOR NOT SELECTED PROCESS NOT SELECTED STARTUP 6/88	CONSIDERING HOT SIDE ESP IN CONJUNCTION WITH AN FGD SYSTEM. SPECIFICATIONS HAVE NOT YET BEEN PREPARED.
NEVADA POWER REID GARDNER 1 125 MW - RETROFIT COAL; 0.5% SULFUR, 8% ASH ADL/COMBUSTION EQUIP ASSOCIATE SODIUM CARBONATE STARTUP 4/74	REFER TO SECTION 3 OF THIS REPORT FOR ADDITIONAL INFORMATION. THIS SODIUM CARBONATE-BASED (TRONA) SCRUBBING SYSTEM CONSISTS OF ONE MODULE CONTAINING A TWIN VARIABLE-THROAT VENTURI SCRUBBER FOLLOWED BY A SEPARATOR IN SERIES WITH A SINGLE-STAGE PERFORATED-PLATE WASH TOWER. PRIMARY PARTICULATE CONTROL IS PROVIDED BY UPSTREAM MECHANICAL COLLECTORS. AN INDIRECT STEAM HOT AIR REHEAT SYSTEM RAISES THE GAS TEMPERATURE 30 F PRIOR TO DISCHARGE TO THE MAIN STACK. THE FLUE GAS CLEANING WASTES ARE ULTIMATELY DISPOSED IN AN ON-SITE CLAY-LINED SOLAR EVAPORATION POND.
NEVADA POWER REID GARDNER 2 125 MW - RETROFIT COAL; 0.5% SULFUR, 8% ASH ADL/COMBUSTION EQUIP ASSOCIATE SODIUM CARBONATE STARTUP 4/74	REFER TO SECTION 3 OF THIS REPORT FOR ADDITIONAL INFORMATION. THIS SODIUM CARBONATE-BASED (TRONA) SCRUBBING SYSTEM CONSISTS OF ONE MODULE CONTAINING A TWIN VARIABLE-THROAT VENTURI SCRUBBER FOLLOWED BY A SEPARATOR IN SERIES WITH A SINGLE-STAGE PERFORATED-PLATE WASH TOWER. PRIMARY PARTICULATE CONTROL IS PROVIDED BY UPSTREAM MECHANICAL COLLECTORS. AN INDIRECT STEAM HOT AIR REHEAT SYSTEM RAISES THE GAS TEMPERATURE 30 F PRIOR TO DISCHARGE TO THE MAIN STACK. THE FLUE GAS CLEANING WASTES ARE ULTIMATELY DISPOSED IN AN ON-SITE CLAY-LINED SOLAR EVAPORATION POND.
NEVADA POWER REID GARDNER 3 125 MW - NEW COAL; 0.5% SULFUR, 8% ASH ADL/COMBUSTION EQUIP ASSOCIATE SODIUM CARBONATE STARTUP 7/76	REFER TO SECTION 3 OF THIS REPORT FOR ADDITIONAL INFORMATION. THIS UNIT IS A NEW COAL-FIRED BOILER THAT IS EQUIPPED WITH SODIUM CARBONATE-BASED(TRONA)SCRUBBING SYSTEM WHICH INCORPORATES A TWIN VARIABLE-THROAT VENTURI SCRUBBER FOLLOWED BY A SEPARATOR IN SERIES WITH A SINGLE-STAGE PERFORATED-PLATE WASH TOWER. MECHANICAL COLLECTORS PROVIDE PRIMARY PARTICULATE CONTROL. REHEAT IS PROVIDED BY AN INDIRECT STEAM HOT AIR REHEAT SYSTEM. WASTE IS DISPOSED IN AN ON-SITE CLAY-LINED POND.
NEVADA POWER REID GARDNER 4 250 MW - NEW COAL; 0.75% SULFUR VENDOR NOT SELECTED PROCESS NOT SELECTED STARTUP 0/83	NEVADA POWER COMPANY HAS SCRAPPED THIER ORIGINAL PLANS TO MAKE UNIT 4 A COPY OF UNIT 3. THE NEW PLANS CALL FOR A 250-MW UNIT TO BE IN OPERATION BY 1983. THE UTILITY IS PREPARING SPECIFICATIONS AT THIS TIME. CONSTRUCTION IS SCHEDULED TO START IN 1980.
NEVADA POWER WARNER VALLEY 1 250 MW - NEW COAL VENDOR NOT SELECTED PROCESS NOT SELECTED STARTUP 6/84	SPECIFICATIONS ARE BEING PREPARED FOR A SCRUBBING SYSTEM. NEVADA POWER HAS NOT YET ANNOUNCED PLANS FOR THIS UNIT'S EMISSION CONTROL STRATEGY.
NEVADA POWER WARNER VALLEY 2 250 MW - NEW COAL VENDOR NOT SELECTED PROCESS NOT SELECTED STARTUP 6/85	SPECIFICATIONS ARE BEING PREPARED FOR A SCRUBBING SYSTEM. NEVADA POWER HAS NOT YET ANNOUNCED PLANS FOR THIS UNIT'S EMISSION CONTROL STRATEGY.

SECTION 2
STATUS OF FGD SYSTEMS

UNIT IDENTIFICATION	CURRENT STATUS
NEW ENGLAND ELEC SYSTEM BRAYTON POINT 3 650 MW - RETROFIT FUEL OIL; 1.0% SULFUR, .1% ASH VENDOR NOT SELECTED PROCESS NOT SELECTED STARTUP 0/ 0	NEW ENGLAND ELECTRIC SYSTEM HAS REQUESTED PERMISSION TO BURN 1.5% SULFUR COAL AT THIS UNIT. THIS IS ALLOWABLE UNDER STATE STANDARDS BUT SO2 EMISSIONS WOULD BE ABOVE ALLOWABLE FEDERAL LEVELS. A DECISION BY THE EPA IS STILL PENDING. MEANWHILE, THE UTILITY IS INVESTIGATING VARIOUS ADVANCED REGENERABLE FGD SYSTEMS WHICH OFFER A BREAKTHROUGH IN OPERATING COSTS AND PRODUCE ELEMENTAL SULFUR AS AN END PRODUCT. THE UTILITY IS CURRENTLY INVOLVED IN BENCH AND LABORATORY SCALE INVESTIGATIONS OF SULFUR RECOVERY. THIS UNIT IS CURRENTLY OPERATIONAL FIRING LOW SULFUR FUEL OIL.
NIAGARA MOHAWK POWER COOP CHARLES R. HUNTLEY 6 100 MW - RETROFIT COAL; 3.5% SULFUR ATOMICS INTERNATIONAL AQUEOUS CARBONATE STARTUP 0/80	A CONTRACT WAS AWARDED TO ATOMICS INTERNATIONAL FOR THE DESIGN AND INSTALLATION OF AN AQUEOUS CARBONATE FGD SYSTEM. THIS DEMONSTRATION SYSTEM WILL PRODUCE END-PRODUCT SULFUR. FUNDS ARE BEING PROVIDED BY THE USEPA AND THE EMPIRE STATE ELECTRIC ENERGY RESEARCH CORP. THE DESIGN SO2 REMOVAL EFFICIENCY WILL BE 90 PERCENT. GROUND BREAKING FOR CONSTRUCTION WILL BE IN LATE FALL 1978.
NORTHERN INDIANA PUB SERVICE BAILLY 7 190 MW - RETROFIT COAL; 3% SULFUR VENDOR NOT SELECTED PROCESS NOT SELECTED STARTUP 0/ 0	NORTHERN INDIANA PUBLIC SERVICE IS CURRENTLY CONSIDERING A LIME OR LIMESTONE SCRUBBING UNIT FOR BAILLY 7 AND 8. THEY ARE ALSO WAITING FOR PERFORMANCE RESULTS OF THE WELLMAN LORD/ALLIED CHEMICAL UNIT IN SERVICE AT DEAN H. MITCHELL 11. LOW SULFUR COAL MAY BE EMPLOYED TO COMPLY WITH SO2 EMISSION REGULATIONS. APPLICABLE INDIANA SO2 REGULATIONS ARE STILL NOT FIRMLY ESTABLISHED.
NORTHERN INDIANA PUB SERVICE BAILLY 8 400 MW - RETROFIT COAL; 3% SULFUR VENDOR NOT SELECTED PROCESS NOT SELECTED STARTUP 0/ 0	NORTHERN INDIANA PUBLIC SIRVICE IS CURRENTLY CONSIDERING A LIME OR LIMESTONE SCRUBBING UNIT FOR BAILLY 7 AND 8. THEY ARE ALSO WAITING FOR PERFORMANCE RESULTS OF THE WELLMAN LORD/ALLIED CHEMICAL UNIT IN SERVICE AT DEAN H. MITCHELL 11. LOW SULFUR COAL MAY BE EMPLOYED TO COMPLY WITH SO2 EMISSION REGULATIONS. APPLICABLE INDIANA SO2 REGULATIONS ARE STILL NOT FIRMLY ESTABLISHED.
NORTHERN INDIANA PUB SERVICE DEAN H. MITCHELL 11 115 MW - RETROFIT COAL; 3.5% SULFUR, 10% ASH DAVY POWERGAS WELLMAN LORD STARTUP 11/76	REFER TO SECTION 3 OF THIS REPORT FOR ADDITIONAL INFORMATION. THIS FGD SYSTEM IS AN INTEGRATION OF THE WELLMAN-LORD SO2 RECOVERY PROCESS OFFERED BY DAVY POWERGAS AND THE SO2 TO SULFUR REDUCTION PROCESS DEVELOPED BY ALLIED CHEMICAL. DAVY POWERGAS IS THE DESIGN AND CONSTRUCTION FIRM AND ALLIED CHEMICAL IS SYSTEM OPERATOR AND PRODUCT MARKETER. PERFORMANCE TESTS WERE SUCCESSFULLY COMPLETED ON SEPTEMBER 14, 1977. A DEMONSTRATION YEAR COMMENCED ON SEPTEMBER 16, 1977.
NORTHERN STATES POWER SHERBURNE 1 710 MW - NEW COAL; 0.8% SULFUR, 9.5% SULFUR COMBUSTION ENGINEERING LIMESTONE/ALKALINE FLYASH STARTUP 3/76	REFER TO SECTION 3 OF THIS REPORT FOR ADDITIONAL INFORMATION. FULL COMMERCIAL OPERATION OF THE SYSTEM BEGAN ON MAY 1, 1976. THE SCRUBBING SYSTEM FOR THIS UNIT CONSISTS OF 12 MODULES. EACH SCRUBBING MODULE INCORPORATES A VENTURI-ROD SECTION AND A MARBLE BED ABSORBER FOR PARTICULATE AND SULFUR DIOXIDE REMOVAL. A FORCED OXIDATION SYSTEM CONVERTS ALL THE CALCIUM SULFITE TO SULFATE PRIOR TO DISCHARGE TO A CLAY-LINED SETTLING POND. STACK GAS REHEAT IS PROVIDED BY IN-LINE HOT WATER TUBES. THE COAL BURNED AT THIS UNIT CONTAINS .8% SULFUR AND 9-10% ASH.
NORTHERN STATES POWER SHERBURNE 2 710 MW - NEW COAL; 0.8% SULFUR, 9.5% ASH COMBUSTION ENGINEERING LIMESTONE/ALKALINE FLYASH STARTUP 4/77	REFER TO SECTION 3 OF THIS REPORT FOR ADDITIONAL INFORMATION. THE SHERBURNE NO. 2 AIR QUALITY CONTROL SYSTEM IS IDENTICAL IN DESIGN TO THE SYSTEM IN OPERATION ON THE NO. 1 UNIT AT THIS STATION. TWELVE 2-STAGE PARTICULATE SCRUBBER (VENTURI-ROD SCRUBBER) AND SULFUR DIOXIDE ABSORBER (MARBLE-BED ABSORBER) MODULES ARE PROVIDED FOR FLY ASH AND SO2 CONTROL. ELEVEN MODULES ARE REQUIRED FOR FULL GENERATING CAPACITY OPERATIONS. THE CALCIUM SULFITE IS FORCIBLY OXIDIZED TO SULFATE PRIOR TO DISCHARGE TO THE DISPOSAL POND. IN-LINE HOT WATER TUBES PROVIDE STACK GAS REHEAT.
NORTHERN STATES POWER SHERBURNE 3 860 MW - NEW COAL; 0.8% SULFUR, 9.5% ASH COMBUSTION ENGINEERING LIMESTONE/ALKALINE FLYASH STARTUP 5/84	TWO ADDITIONAL COAL-FIRED POWER-GENERATING UNITS ARE SCHEDULED TO BE INSTALLED AT NSP'S SHERBURNE COUNTY GENERATING STATION IN BECKER MINNESOTA. COMBUSTION ENGINEERING WAS AWARDED A CONTRACT FOR LIMESTONE SLURRY SPRAY TOWER FGD SYSTEMS ON THE 860 MW UNITS 3 & 4. THE 2-STAGE SCRUBBING SYSTEM WILL REMOVE PARTICULATE (99.5%) & SO2 (80%). THE BOILER CONTRACT HAS BEEN AWARDED TO BABCOCK AND WILCOX AND THE TURBINE WILL BE SUPPLIED BY GENERAL ELECTRIC. START-UP HAS BEEN DELAYED TO MAY 1984 AND CONSTRUCTION START-UP HAS BEEN SUSPENDED UNTIL APRIL 1980 DUE TO ENVIRONMENTAL PROBLEMS.

SECTION 2
STATUS OF FGD SYSTEMS

UNIT IDENTIFICATION	CURRENT STATUS
NORTHERN STATES POWER SHERBURNE 4 860 MW - NEW COAL; 0.8% SULFUR, 9.5% ASH COMBUSTION ENGINEERING LIMESTONE/ALKALINE FLYASH STARTUP 0/87	TWO ADDITIONAL COAL-FIRED POWER-GENERATING UNITS ARE SCHEDULED TO BE INSTALLED AT NSP'S SHERBURNE COUNTY GENERATING STATION IN BECKER MINNESOTA. COMBUSTION ENGINEERING WAS AWARDED A CONTRACT FOR LIMESTONE SLURRY SPRAY TOWER FGD SYSTEMS ON THE 860 MW UNITS 3 & 4. THE 2-STAGE SCRUBBING SYSTEM WILL REMOVE PARTICULATE (99.5%) & SO2 (80%). THE BOILER CONTRACT HAS BEEN AWARDED TO BABCOCK AND WILCOX AND THE TURBINE WILL BE SUPPLIED BY GENERAL ELECTRIC. UNIT START-UP IS NOW TENTATIVELY SCHEDULED FOR 1987 ALTHOUGH LOW DEMAND AND ENVIRONMENTAL PROBLEMS MAY DELAY THIS INDEFINITELY.
OTTER TAIL POWER COYOTE 1 400 MW - NEW LIGNITE; 0.9% SULFUR, 6.5% ASH WHEELABRATOR-FRYE/A.I. AQUEOUS CARBONATE STARTUP 5/81	THIS NEW COAL-FIRED STATION IS JOINTLY OWNED BY FIVE UTILITIES. OTTER TAIL POWER IS THE MAJOR OWNER AND CONSTRUCTOR. MONTANA-DAKOTA UTILITIES IS THE FACILITY OPERATOR. THIS PLANNED UNIT WILL FIRE LOW SULFUR LIGNITE FROM THE MERCER COUNTY AREA IN A B&W CYCLONE BOILER. THE CONTRACT FOR THIS AQUEOUS CARBONATE/FABRIC FILTER SO2 SCRUBBER-ABSORBER WAS AWARDED TO WHEELABRATOR-FRYE AND ATOMICS INTERNATIONAL. THE DRY REMOVAL SYSTEM COMBINES AI'S AQUEOUS CARBONATE PROCESS IN A W-F FABRIC FILTER. UNIT CONSTRUCTION IS NOW 20% COMPLETE AND FGD SYSTEM CONSTRUCTION HAS JUST BEGUN.
PACIFIC GAS AND ELECTRIC FOSSIL 1 800 MW - NEW COAL; 0.8% SULFUR, 10% ASH VENDOR NOT SELECTED LIMESTONE STARTUP 0/85	PG&E ANNOUNCED PLANS TO BUILD TWO 800-MW COAL-FIRED POWER GENERATING UNITS IN NORTHERN CALIFORNIA. THE FIRST UNIT WILL BURN COAL WITH A HEATING VALUE OF 12000 BTU/LB, 0.8% SULFUR AND 10% ASH CONTENTS. THE SECOND UNIT WILL BURN COAL OF EQUAL OR BETTER QUALITY. THE EMISSION CONTROL SYSTEM WILL CONSIST OF AN ESP OR BAGHOUSE AND A LIMESTONE FGD SYSTEM. SLUDGE WILL BE DISPOSED OF IN A LANDFILL. START-UP DATES ARE 1985 AND 1986 FOR NOS. 1 AND 2 RESPECTIVELY.
PACIFIC GAS AND ELECTRIC FOSSIL 2 800 MW - NEW COAL; 0.8% SULFUR, 10% ASH VENDOR NOT SELECTED LIMESTONE STARTUP 0/86	PG&E ANNOUNCED PLANS TO BUILD TWO 800-MW COAL-FIRED POWER GENERATING UNITS IN NORTHERN CALIFORNIA. THE FIRST UNIT WILL BURN COAL WITH A HEATING VALUE OF 12000 BTU/LB, 0.8% SULFUR AND 10% ASH CONTENTS. THE SECOND UNIT WILL BURN COAL OF EQUAL OR BETTER QUALITY. THE EMISSION CONTROL SYSTEM WILL CONSIST OF AN ESP OR BAGHOUSE AND A LIMESTONE FGD SYSTEM. SLUDGE WILL BE DISPOSED OF IN A LANDFILL. START-UP DATES ARE 1985 AND 1986 FOR NOS. 1 AND 2 RESPECTIVELY.
PACIFIC POWER & LIGHT JIM BRIDGER 4 509 MW - NEW COAL; 0.56% SULFUR, 9% ASH AIR CORRECTION DIVISION, UOP SODIUM CARBONATE STARTUP 9/79	THE AIR CORRECTION DIVISION OF UOP WAS AWARDED A CONTRACT FOR AN FGD SYSTEM AT THIS NEW-509 MW COAL-FIRED UNIT. THE FGD SYSTEM WILL CONSIST OF PARALLEL TRAY TOWER ABSORBER MODULES, EACH TREATING ONE-THIRD OF THE BOILER FLUE GAS AT FULL LOAD. AN ESP WILL PROVIDE PRIMARY PARTICULATE CONTROL. AN ACID BRICK LINED WET STACK IS INCLUDED IN THE SYSTEM. PPL'S PILOT STUDY INSPECTION REVEALED SCALE FORMATION PROBLEMS. TESTS ARE BEING CONDUCTED TO RESOLVE THIS PROBLEM. TO DATE, 67% OF THE UNIT CONSTRUCTION IS COMPLETE.
PENNSYLVANIA POWER BRUCE MANSFIELD 1 825 MW - NEW COAL; 4.7% SULFUR, 12.5% ASH CHEMICO LIME STARTUP 4/76	REFER TO SECTION 3 OF THIS REPORT FOR ADDITIONAL INFORMATION. THIS EMISSION CONTROL SYSTEM WAS DESIGNED TO REMOVE FLYASH AND SO2 FROM 3.35 MM ACFM OF FLUE GAS USING THIOSORBIC LIME AS A SCRUBBING ABSORBENT. THE INITIAL SHAKEDOWN AND DEBUGGING PHASE OF OPERATION BEGAN FOR PART OF THE SYSTEM IN DECEMBER 1975. PARTIAL COMMERCIAL OPERATION COMMENCED IN APRIL 1976. THE UNIT WAS CERTIFIED FULL-LOAD COMMERCIAL IN JUNE 1976. THE FGD SYSTEM HAS EXPERIENCED OPERATIONAL PROBLEMS SINCE IT HAS BEEN IN SERVICE REQUIRING A NUMBER OF SYSTEM REPAIRS AND DESIGN MODIFICATINS.
PENNSYLVANIA POWER BRUCE MANSFIELD 2 825 MW - NEW COAL; 4.7% SULFUR, 12.5% ASH CHEMICO LIME STARTUP 7/77	REFER TO SECTION 3 OF THIS REPORT FOR ADDITIONAL INFORMATION. THIS EMISSION CONTROL SYSTEM WAS DESIGNED TO REMOVE FLYASH AND SO2 FROM 3.35 MM ACFM OF FLUE GAS USING THIOSORBIC LIME AS A SCRUBBING ABSORBENT. SIX SCRUBBING TRAINS, EACH INCLUDING TWO VENTURI SCRUBBERS IN SERIES ARRANGEMENT, ARE PROVIDED FOR FULL-LOAD OPERATION. THE INITIAL SHAKEDOWN AND DEBUGGING PHASE OF OPERATION BEGAN FOR THREE TRAINS IN JULY, 1977. FULL COMMERCIAL OPERATION FOR THE ENTIRE SYSTEM COMMENCED ON OCTOBER 1, 1977.
PENNSYLVANIA POWER BRUCE MANSFIELD 3 825 MW - NEW COAL; 4.7% SULFUR PULLMAN KELLOGG LIME STARTUP 4/80	A CONTRACT WAS AWARDED TO PULLMAN KELLOGG FOR THE FGD SYSTEM AT THIS UNIT. THE EMISSION CONTROL SYSTEM FOR THIS UNIT WILL CONSIST OF ESP'S UP-STREAM OF FIVE WEIR HORIZONTAL CROSSFLOW WET SCRUBBING MODULES. SLUDGE WILL BE DISPOSED OF BY THE EXISTING SYSTEM AT THE BRUCE MANSFIELD PLANT. LINER IN THE CHIMNEY WILL BE AN INCONEL 625 MATERIAL. THE UNIT IS CURRENTLY UNDER CONSTRUCTION WITH ESP'S 70-80 PERCENT COMPLETE AND THE FGD SYSTEM 30 PERCENT COMPLETE. UNIT START-UP WILL BE IN APRIL 1980.

SECTION 2
STATUS OF FGD SYSTEMS

UNIT IDENTIFICATION	CURRENT STATUS
PHILADELPHIA ELECTRIC CROMBY 150 MW - RETROFIT COAL: 2-4% SULFUR UNITED ENGINEERS MAGNESIUM OXIDE STARTUP 6/80	THE UTILITY PLANS TO RETROFIT ONE OF THE TWO BOILERS AT CROMBY WITH AN FGD SYSTEM. HOWEVER, A FINAL DECISION HAS NOT BEEN MADE. THE SYSTEM BEING GIVEN PRIMARY CONSIDERATION IS MAGNESIUM OXIDE. CURRENTLY, THE UTILITY IS RE-NEGOTIATING CONSENT ORDERS AND THE START-UP DATE OF JUNE 1980 IS TENTATIVE.
PHILADELPHIA ELECTRIC EDDYSTONE 1A 120 MW - RETROFIT COAL: 2.5% SULFUR, 10% ASH UNITED ENGINEERS MAGNESIUM OXIDE STARTUP 9/75	REFER TO SECTION 3 OF THIS REPORT FOR ADDITIONAL INFORMATION. THE EMISSION CONTROL SYSTEM FOR THIS UNIT CONSISTS OF THREE PARALLEL SCRUBBING TRAINS FOR THE CONTROL OF PARTICULATE AND SULFUR DIOXIDE. THE C-SIDE SCRUBBING TRAIN INCLUDES AN SO2 ABSORBER MODULE IN SERIES WITH A PARTICULATE SCRUBBER. APPROXIMATELY ONE-THIRD OF THE BOILER FLUE GAS IS SCRUBBED WITH MAGNESIUM OXIDE SLURRY FOR SO2 REMOVAL. THE SPENT SLURRY IS REGENERATED AT THE ESSEX SULFURIC ACID PLANT IN NEWARK, N.J. THE REGENERATED MAGOX IS RETURNED TO THE PLANT FOR SO2 SCRUBBING SERVICE.
PHILADELPHIA ELECTRIC EDDYSTONE 1B 240 MW - RETROFIT COAL: 2.5% SULFUR, 10% ASH UNITED ENGINEERS MAGNESIUM OXIDE STARTUP 6/80	THE INSTALLATION OF AN FGD SYSTEM ON THE BALANCE OF THE FLUE GAS FROM THIS UNIT WILL FOLLOW PENDING THE OUTCOME OF THE PERFORMANCE OF THE EXPERIMENTAL SCRUBBING UNIT WHICH HAS BEEN INSTALLED AND CURRENTLY OPERATIONAL ON THIS UNIT. CURRENTLY, 3 PARTICULATE SCRUBBERS ARE TREATING THE FULL GAS LOAD FROM THIS UNIT. CONSENT ORDERS ARE PRESENTLY BEING RE-NEGOTIATED AND THE START-UP DATE OF JUNE 1980 IS TENTATIVE.
PHILADELPHIA ELECTRIC EDDYSTONE 2 336 MW - RETROFIT COAL: 2.5% SULFUR, 10% ASH UNITED ENGINEERS MAGNESIUM OXIDE STARTUP 6/80	THE UTILITY IS AWAITING PERFORMANCE RESULTS FROM THE EXPERIMENTAL FGD SYSTEM INSTALLED ON UNIT 1 AT THIS STATION BEFORE PROCEEDING WITH THE DESIGN OF AN FGD SYSTEM FOR THIS COAL-FIRED BOILER. THE SYSTEM BEING GIVEN PRIMARY CONSIDERATION IS MAGNESIUM OXIDE, DESIGNED JOINTLY BY UNITED ENGINEERS AND PHILADELPHIA ELECTRIC. CURRENTLY, THE UTILITY IS RE-NEGOTIATING CONSENT ORDERS AND THE START UP DATE OF JUNE 1980 IS TENTATIVE.
POTOMAC ELECTRIC POWER DICKERSON 4 800 MW - NEW COAL: 2% SULFUR VENDOR NOT SELECTED PROCESS NOT SELECTED STARTUP 5/85	THERE ARE NO FIRM PLANS FOR INSTALLATION OF AN FGD SYSTEM. STARTUP DATE OF THE BOILER IS PLANNED FOR 1985. THIS UNIT WILL BURN 2 PERCENT SULFUR COAL WITH A HEATING VALUE OF 11,000 BTU/LB.
POWER AUTHORITY OF NEW YORK ARTHUR KILL PLANT 700 MW - NEW COAL: 3% SULFUR - REFUSE VENDOR NOT SELECTED PROCESS NOT SELECTED STARTUP 11/84	THE UTILITY IS CONSIDERING BOTH REGENERABLE AND LIMESTONE FGD PROCESSES. FGD TECHNOLOGY IS BEING CONSIDERED FOR A FOSSIL FUEL BURNING UNIT WHICH WILL EMPLOY COAL AS THE PRIMARY FUEL AND OIL AS BACKUP. REFUSE WILL BE PROVIDED AS A SUPPLEMENTAL FUEL SUPPLY. THE PREFERRED PLANT SITE IS THE ARTHUR KILL FACILITY LOCATED ON STATEN ISLAND. THE PROJECT DESIGN ENGINEERING FIRM IS SARGENT AND LUNDY. PUBLIC SERVICE COMMISSION HEARINGS ARE IN PROGRESS.
PUBLIC SERVICE OF INDIANA GIBSON 5 650 MW - NEW COAL: 3.3% SULFUR VENDOR NOT SELECTED PROCESS NOT SELECTED STARTUP 0/82	PUBLIC SERVICE CO OF INDIANA ANNOUNCED PLANS FOR THE CONSTRUCTION OF THIS NEW 650-MW COAL FIRED POWER GENERATIONG UNIT AT GIBSON STATION. BIDS HAVE BEEN RECEIVED AND ARE BEING EVALUATED. INITIAL STARTUP IS SCHEDULED FOR 1982.
PUBLIC SERVICE OF NEW MEXICO SAN JUAN 1 314 MW - NEW COAL: 0.8% SULFUR, 20% ASH DAVY POWERGAS WELLMAN LORD STARTUP 4/78	REFER TO SECTION 3 OF THIS REPORT FOR ADDITIONAL INFORMATION. THIS FGD SYSTEM IS AN INTEGRATION OF THE WELLMAN LORD SO2 RECOVERY PROCESS OF DAVY POWERGAS AND ALLIED CHEMICAL'S SO2 REDUCTION TO SULFUR PROCESS. A HOT SIDE ELECTROSTATIC PRECIPITATOR PRECEEDS THE FGD SYSTEM. OF THE FOUR ABSORBER TOWERS INSTALLED, THREE ARE NEEDED TO CARRY THE FULL LOAD. THE COAL BURNED AT THIS UNIT HAS SULFUR AND ASH CONTENTS OF .8% AND 20% RESPECTIVELY. THE SYSTEM OPERATES ON A CLOSED WATER LOOP WITH RIVER WATER BEING USED AS MAKE-UP FOR LOSSES DUE TO EVAPORATION.

SECTION 2
STATUS OF FGD SYSTEMS

UNIT IDENTIFICATION	CURRENT STATUS
PUBLIC SERVICE OF NEW MEXICO SAN JUAN 2 306 MW - RETROFIT COAL; 0.8% SULFUR, 20% ASH DAVY POWERGAS WELLMAN LORD STARTUP 7/78	REFER TO SECTION 3 OF THIS REPORT FOR ADDITIONAL INFORMATION. THIS FGD SYSTEM IS AN INTEGRATION OF THE WELLMAN LORD SO2 RECOVERY PROCESS OF DAVY POWERGAS AND ALLIED CHEMICAL'S SO2 REDUCTION TO SULFUR PROCESS. A HOT SIDE ELECTROSTATIC PRECIPITATOR PRECEEDS THE FGD SYSTEM. THE SYSTEM INCLUDES FOUR ABSORBER TOWERS, THREE OF WHICH ARE NECESSARY TO CARRY THE FULL LOAD. THE WATER LOOP IS CLOSED WITH RIVER WATER BEING USED TO MAKE UP FOR LOSSES DUE TO EVAPORATION. THE COAL BURNED AT THIS UNIT HAS SULFUR AND ASH CONTENTS OF .8% AND 20% RESPECTIVELY.
PUBLIC SERVICE OF NEW MEXICO SAN JUAN 3 468 MW - NEW COAL; 0.8% SULFUR, 20% ASH DAVY POWERGAS WELLMAN LORD STARTUP 6/79	A CONTRACT HAS BEEN AWARDED TO DAVY POWERGAS TO SUPPLY FOUR ABSORBER TOWERS FOR REMOVAL OF SO2 AT THIS NEW UNIT. ONE MODULE IS EXPECTED TO BE OPERATIONAL BY JUNE 1979 WHICH WILL BRING THE UNIT INTO COMPLIANCE WITH FEDERAL NSPS. THE REMAINING THREE MODULES SHOULD BE OPERATIONAL BY JANUARY 1982 AT WHICH TIME THE UNIT WILL BE IN COMPLIANCE OF STATE STANDARDS. POWER PLANT CONSTRUCTION IS BEHIND SCHEDULE BUT ABSORBER CONSTRUCTION IS PROCEEDING AS PLANNED. IT IS POSSIBLE THAT THE FINAL THREE ABSORBERS MAY BE IN AS EARLY AS JANUARY 1981.
PUBLIC SERVICE OF NEW MEXICO SAN JUAN 4 472 MW - NEW COAL; 0.8% SULFUR, 20% ASH DAVY POWERGAS WELLMAN LORD STARTUP 1/82	DAVY POWERGAS HAS BEEN AWARDED A CONTRACT TO SUPPLY THE SO2 REMOVAL SYSTEM FOR THIS UNIT. THE PLANS INCLUDE A WELLMAN LORD SO2 RECOVERY PROCESS AS WELL AS AN UPSTREAM ELECTROSTATIC PRECIPITATOR FOR PRIMARY PARTICULATE REMOVAL. FGD OPERATIONS ARE EXPECTED TO BEGIN AT THIS PLANT IN JANUARY 1982.
SALT RIVER PROJECT CORONADO 1 350 MW - NEW COAL; 1% SULFUR PULLMAN KELLOGG LIMESTONE STARTUP 1/79	THIS NEW UNIT WILL BURN LOW SULFUR WESTERN COAL. A MAXIMUM OF 80% OF THE FLUE GAS WILL BE SCRUBBED TO MEET SULFUR DIOXIDE EMISSION REGULATIONS. PULLMAN/KELLOGG WILL PROVIDE 2 WEIR HORIZONTAL SPRAY TOWERS UTILIZING LIMESTONE SLURRY FOR SO2 CONTROL. THE SYSTEM WILL UTILIZE RUBBER-LINED SLURRY RECYCLE PUMPS, EACH RATED AT 9800 GPM, RIGIFLAKE-LINED SCRUBBER MODULES, VERTICAL HEIL MIST ELIMINATORS AND A MINIMUM OF 20 PERCENT REHEAT. THE SLUDGE WILL BE PONDED. THE FOUNDATION IS IN AND STRUCTURAL WORK IS 70 PERCENT COMPLETE.
SALT RIVER PROJECT CORONADO 2 350 MW - NEW COAL; 1% SULFUR PULLMAN KELLOGG LIMESTONE STARTUP 1/80	THIS NEW UNIT WILL BURN LOW SULFUR WESTERN COAL. A MAXIMUM OF 80% OF THE FLUE GAS WILL BE SCRUBBED TO MEET SULFUR DIOXIDE EMISSION REGULATIONS. PULLMAN/KELLOGG WILL PROVIDE 2 WEIR HORIZONTAL SPRAY TOWERS UTILIZING LIMESTONE SLURRY FOR SO2 CONTROL. THE SYSTEM WILL UTILIZE RUBBER-LINED SLURRY RECYCLE PUMPS, EACH RATED AT 9800 GPM, RIGIFLAKE-LINED SCRUBBER MODULES, VERTICAL HEIL MIST ELIMINATORS AND A MINIMUM OF 20 PERCENT REHEAT. THE SLUDGE WILL BE PONDED. THE FOUNDATION IS IN AND STRUCTURAL WORK IS 50 PERCENT COMPLETE.
SALT RIVER PROJECT CORONADO 3 350 MW - NEW COAL; 1% SULFUR VENDOR NOT SELECTED LIMESTONE STARTUP 0/87	THIS NEW UNIT WILL BURN LOW SULFUR WESTERN COAL. 80 PERCENT OF THE GAS WILL BE SCRUBBED TO MEET SULFUR DIOXIDE EMISSION REGULATIONS. THE UTILITY IS CURRENTLY CONSIDERING THE INSTALLATION OF TWO HORIZONTAL SPRAY TOWERS EMPLOYING A LIMESTONE SCRUBBING SOLUTION TO REMOVE SO2 FROM THE FLUE GAS. SCHEDULED COMMERCIAL OPERATION DATE IS 1987. PLANS FOR AN EMISSION CONTROL SYSTEM HAVE NOT BEEN FINALIZED. SLUDGE WILL PROBABLY BE PONDED.
SAN MIGUEL ELECTRIC COOP SAN MIGUEL 1 400 MW - NEW LIGNITE; 1.67% SULFUR BABCOCK & WILCOX LIMESTONE STARTUP 6/80	THE EMISSION CONTROL EQUIPMENT FOR THE COAL-FIRED RADIANT BOILER WILL CONSIST OF AN ESP UPSTREAM OF FOUR LIMESTONE SCRUBBING MODULES. THE SCRUBBER FLUE GAS CAPACITY IS NOMINALLY DESIGNED AT 1.579 MILLION ACFM (302 F). DESIGN SO2 REMOVAL EFFICIENCY IS 86 PERCENT FOR 4400 PPM SO2 INLET. L/G RATIOS ARE 10 AND 45 FOR QUENCHER AND ABSORBER, RESPECTIVELY. RESEARCH COTTRELL HAS BEEN AWARDED THE SLUDGE DISPOSAL CONTRACT. FGD SYSTEM FOUNDATION AND STRUCTURAL STEEL WORK IS COMPLETE. INITIAL START-UP IS SCHEDULED FOR LATE SUMMER 1978.
SEMINOLE ELECTRIC SEMINOLE 1 600 MW - NEW COAL; 2.75% SULFUR, 8.5% ASH VENDOR NOT SELECTED LIMESTONE STARTUP 6/83	SEMINOLE ELECTRIC HAS ANNOUNCED PLANS TO CONSTRUCT ONE AND POSSIBLY TWO NEW 600MW COAL-FIRED UNITS. THE UTILITY INTENDS TO UTILIZE ESPS FOR PARTICULATE REMOVAL AND A LIMESTONE FGD SYSTEM FOR SO2 CONTROL OF EMISSIONS FROM THE BURNING OF 2.75% SULFUR , 8.5% ASH COAL (11,000 BTU/LB HEATING VALUE). THE UTILITY EXPECTS TO INITIATE REQUESTS FOR BIDS FOR THE FGD SYSTEM IN MAY 1979.

SECTION 2
STATUS OF FGD SYSTEMS

UNIT IDENTIFICATION	CURRENT STATUS
SIKESTON BOARD OF MUNIC. UTIL. SIKESTON POWER STATION 235 MW - NEW COAL; 2.8% SULFUR, 11.2% ASH BABCOCK & WILCOX LIMESTONE STARTUP 6/81	B&W WAS AWARDED A CONTRACT FOR THE BOILER AND AIR QUALITY CONTROL SYSTEM. THE AQCS WILL CONSIST OF 2 ESP'S FOLLOWED BY 3 FGD MODULES, EACH CAPABLE OF HANDLING 50% OF THE BOILER LOAD; ONE WILL BE ON STAND-BY AT ALL TIMES. THE UNIT WILL BURN A 2.8% SULFUR COAL. THE SIKESTON STATION WILL FEATURE AN FRP-LINED STACK, 2 PONDS (ONE FOR FLY ASH, ONE FOR SCRUBBER SLUDGE/ BOTTOM-ASH DISPOSAL), AND 4 AXIAL FLOW FANS. NO STACK GAS REHEAT IS PLANNED. MAXIMUM FLUE GAS CAPACITY IS 748,390 ACFM @ 288 F. CONSTRUCTION COMMENCED IN MAY 1978. THE UNIT IS NOW 10% COMPLETE.
SOUTH CAROLINA PUBLIC SERVICE WINYAH 2 280 MW - NEW COAL; 1.0% SULFUR, 19% ASH BABCOCK & WILCOX LIMESTONE STARTUP 7/77	REFER TO SECTION 3 OF THIS REPORT FOR ADDITIONAL INFORMATION. THE EMISSION CONTROL SYSTEM FOR THIS UNIT CONSISTS OF A 100% CAPACITY ESP FOLLOWED BY A 50% CAPACITY LIMESTONE FGD SYSTEM. ONE FGD MODULE, CONSISTING OF A VENTURI SCRUBBER AND TRAY TOWER ABSORBER, REMOVES 70% OF THE INLET SO2. REHEAT IS SUPPLIED BY FLUE GAS BYPASS. THE SCRUBBING WASTES ARE DISCHARGED TO AN ON-SITE, UNLINED DIKED POND. THE NO. 2 UNIT COMMENCED INITIAL OPERATION IN JULY 1977. THE ACCEPTANCE TEST FOR COMMERCIAL CERTIFICATION WAS SUCCESSFULLY COMPLETED IN DECEMBER 1977.
SOUTH CAROLINA PUBLIC SERVICE WINYAH 3 300 MW - NEW COAL; 1.7% SULFUR BABCOCK & WILCOX LIMESTONE STARTUP 5/80	A CONTRACT HAS BEEN AWARDED TO BABCOCK AND WILCOX FOR THE INSTALLATION OF THE FGD SYSTEM ON THIS UNIT. PARTICULATE REMOVAL WILL BE PROVIDED BY RESEARCH COTTRELL ESP'S. THE BOILER IS COAL-FIRED DRY-BOTTOM UNIT WHICH WILL BURN COAL WITH A 1.7% SULFUR CONTENT AND HEAT VALUE OF 11,500 BTU/LB. THE GENERATING EQUIPMENT IS BEING SUPPLIED BY RILEY STOKER. 100% OF THE FLUE GAS WILL BE SCRUBBED. FGD SYSTEM CONSTRUCTION WILL BEGIN IN DECEMBER 1978. START-UP IS SCHEDULED FOR MAY 1980.
SOUTHERN ILLINOIS POWER COOP MARION 4 184 MW - NEW COAL; 3% SULFUR, 16% ASH BABCOCK & WILCOX LIMESTONE STARTUP 9/78	THE EMISSION CONTROL SYSTEM FOR THIS NEW COAL-FIRED BOILER CONSISTS OF AN ESP FOR PARTICULATE CONTROL FOLLOWED BY 2 SPRAY TOWERS FOR SO2 CONTROL. LIMESTONE SLURRY WILL BE USED AS THE SCRUBBING REAGENT. SIPC IS NOT PLANNING TO UTILIZE FLUE GAS REHEAT AND IS CURRENTLY PLANNING ON A BRICK LINING FOR THE STACK. SIPC INTENDS TO USE A LANDFILL WITH ASH STABILIZATION OF WASTE FOR SLUDGE DISPOSAL. CONSTRUCTION IS NEARLY 100% COMPLETE AND THE SYSTEM HAS BEEN AIR TESTED. THE BOILER IS NOW OPERATING. THE FGD SYSTEM WILL START BY MID NOVEMBER.
SOUTHERN ILLINOIS POWER COOP MARION 5 300 MW - NEW COAL; 3% SULFUR, 16% ASH VENDOR NOT SELECTED PROCESS NOT SELECTED STARTUP 0/84	SOUTHERN ILLINOIS POWER COOP IS PLANNING A NEW COAL-FIRED UNIT FOR ITS MARION STATION, MARION 5. THE FGD PROCESS HAS NOT BEEN DECIDED. THE UNIT WILL FIRE 3.0% SULFUR COAL AND MAY START UP AS EARLY AS 1983. THE UTILITY IS WAITING FOR THE FINALIZATION OF THE SO2 REGULATIONS THEY WILL HAVE TO MEET.
SOUTHERN INDIANA GAS & ELEC A. B. BROWN 1 250 MW - NEW COAL; 3.75% SULFUR FMC CORPORATION DOUBLE ALKALI STARTUP 4/79	THE UTILITY HAS AWARDED A CONTRACT TO FMC FOR THE INSTALLATION OF A DOUBLE ALKALI SCRUBBING SYSTEM UTILIZING SODA ASH AND LIME. THIS UNIT IS A PART OF A NEW POWER STATION LOCATED IN WEST FRANKLIN, INDIANA. THE SYSTEM WILL PRODUCE FILTER CAKE AS A WASTE PRODUCT WHICH WILL BE DISPOSED OF IN AN ON-SITE LANDFILL. THE PARTICULATE EMISSIONS WILL BE CONTROLLED BY A BUELL-ENVIROTECH COLD-SIDE ESP. THE CONSTRUCTION WORK AND ENGINEERING IS APPROXIMATELY 78% COMPLETE. THE FGD SYSTEM IS APPROXIMATELY 70% COMPLETE.
SOUTHERN MISSISSIPPI ELECTRIC R. D. MORROW 1 180 MW - NEW COAL; 1% SULFUR, 8% ASH RILEY STOKER / ENVIRONEERING LIMESTONE STARTUP 8/78	A CONRTACT WAS AWARDED BY SME TO RILEY STOKER/ENVIRONEERING FOR THIS FGD SYSTEM. PARTICULATES WILL BE CONTROLLED BY A HIGH-EFFICIENCY ESP UPSTREAM OF THE FGD SYSTEM. DESIGNED SO2 AND PARTICULATE REMOVAL EFFICIENCIES ARE 85 AND 99.6 PERCENT, RESPECTIVELY. A WATER SPRAY HAS BEEN ADDED IN THE BY-PASS DUCT TO PROTECT THE LINER FROM TEMPERATURE EXCURSION. SLUDGE WILL BE STABILIZED WITH FLYASH AND DISPOSED OF ON-SITE. INITIAL STARTUP HAS BEGUN. HOWEVER DUE TO BOILER PROBLEMS NO OPERATING TIME HAS BEEN ACCUMULATED. ACCEPTANCE TESTING IS EXPECTED IN NOVEMBER.
SOUTHERN MISSISSIPPI ELECTRIC R. D. MORROW 2 180 MW - NEW COAL; 1% SULFUR, 8% ASH RILEY STOKER / ENVIRONEERING LIMESTONE STARTUP 1/79	A CONTRACT WAS AWARDED BY SME TO RILIY STOKER/ENVIRONEERING FOR THIS FGD SYSTEM. PARTICULATES WILL BE CONTROLLED BY A HIGH-EFFICIENCY ESP UPSTREAM OF THE FGD SYSTEM. DESIGN SULFUR DIOXIDE AND PARTICULATE REMOVAL EFFICIENCIES ARE 85 AND 99.6 PERCENT, RESPECTIVELY. A WATER SPRAY HAS BEEN ADDED IN THE BY-PASS DUCT TO PROTECT THE LINER FROM TEMPERATURE EXCURSION. SLUDGE WILL BE STABILIZED WITH FLYASH AND DISPOSED ON THE PLANT SITE. CONSTRUCTION OF THE WET LIMESTONE SCRUBBING SYSTEM IS 85 PERCENT COMPLETE.

SECTION 2
STATUS OF FGD SYSTEMS

UNIT IDENTIFICATION	CURRENT STATUS
SOUTHWESTERN ELECTRIC POWER HENRY W. PERKEY 1 720 MW - NEW LIGNITE; 0.8% SULFUR, 20% ASH AIR CORRECTION DIVISION, UOP LIMESTONE STARTUP 2/84	A CONTRACT FOR THE EMISSION CONTROL SYSTEM HAS BEEN AWARDED TO THE AIR CORRECTION DIVISION OF UOP. THE SYSTEM DESIGN INCLUDES TWO COLD-SIDE ESP'S FOR PARTICULATE REMOVAL UP-STREAM FROM 4 SPRAY TOWERS WHICH UTILIZE LIME-STONE SLURRY FOR SO2 CONTROL. SLUDGE DISPOSAL WILL BE HANDLED BY AN IUCS SYSTEM. START-UP IS EXPECTED BY FEBRUARY 1984.
SPRINGFIELD CITY UTILITIES SOUTHWEST 1 200 MW - NEW COAL; 3.5% SULFUR, 13% ASH AIR CORRECTION DIVISION, UOP LIMESTONE STARTUP 4/77	REFER TO SECTION 3 OF THIS REPORT FOR ADDITIONAL INFORMATION. THE EMISSION CONTROL SYSTEM FOR THIS NEW COAL-FIRED UNIT CONSISTS OF A FOUR-FIELD HIGH EFFICIENCY ESP (99.6% DESIGN) AND 2 TURBULENT CONTACT AB-SORBER MODULES (80% DESIGN) FOR THE CONTROL OF PARTICULATES AND SO2. BOTH THE ESP AND LIMESTONE FGD SYSTEM ARE SUPPLIED BY UOP. THE SCRUBBING WASTES ARE DEWATERED BY A ROTARY DRUM VACUUM FILTER AND THE FILTER CAKE IS HAULED AWAY TO A LANDFILL. INITIAL OPERATION OF THE FGD SYSTEM OCCURRED IN APRIL 77. IN SEPT. 77, THE UNIT SUCCESSFULLY COMPLETED COMPLIANCE TESTING.
SPRINGFIELD WATER LIGHT & PWR DALLMAN 3 190 MW - NEW COAL; 3.7% SULFUR RESEARCH COTTRELL LIMESTONE STARTUP 7/80	A CONTRACT HAS BEEN AWARDED TO RESEARCH COTTRELL FOR THE INSTALLATION OF A LIMESTONE FGD SYSTEM. REQUIRED SULFUR DIOXIDE REMOVAL EFFICIENCY IS 90 PERCENT. A SLUDGE DISPOSAL STRATEGY HAS NOT BEEN FINALIZED, BUT THE UTILITY IS CONSIDERING EITHER PONDING OR LANDFILL. CONSTRUCTION OF THE FGD SYSTEM SHOULD COMMENCE IN LATE 1978. FGD START-UP IS SCHEDULED FOR JULY 1980. BOILER OPERATION IS SCHEDULED TO COMMENCE IN JUNE 1978.
ST. JOE ZINC G. F. WEATON 1 60 MW - RETROFIT COAL; 3% SULFUR BUREAU OF MINES CITRATE STARTUP 12/78	CONSTRUCTION CONTINUES ON THE CITRATE PROCESS SCRUBBING SYSTEM WHICH WILL CONTROL SO2 EMISSIONS FROM A 60-MW COAL-FIRED POWER GENERATING UNIT AT ST. JOE MINERALS. THIS UNIT PROVIDES POWER FOR THE LOCAL UTILITY GRID. FGD SYSTEM START-UP IS SCHEDULED FOR DECEMBER 1978. THE REGENERABLE FGD SYSTEM WILL PRODUCE ELEMENTAL SULFUR AS A BY-PRODUCT. ALL MAJOR CONSTRUCTION IS COMPLETE. WIRING AND PIPING WORK IS NOW BEING COMPLETED.
TENNESSEE VALLEY AUTHORITY SHAWNEE 10A 10 MW - RETROFIT COAL; 2.9% SULFUR, 15.8% ASH AIR CORRECTION DIVISION, UOP LIME/LIMESTONE STARTUP 4/72	REFER TO THE BACKGROUND INFORMATION IN SECTION 3 OF THIS REPORT. THIS TURBULENT CONTACT ABSORBER (TCA) LIME/LIMESTONE SCRUBBING SYSTEM HAS BEEN OPERATIONAL SINCE APRIL 1972. THIS TEST PROGRAM IS FUNDED BY THE EPA WITH TVA AS THE CONSTRUCTOR AND FACILITY OPERATOR. THE BECHTEL CORP. OF SAN FRANCISCO IS THE MAJOR CONTRACTOR, TEST DIRECTOR, AND REPORT WRITER. TESTING WITH ADIPIC ACID AS ADDITIVE FOR IMPROVING SO2 REMOVAL EFFICIENCY CONTINUED THROUGH AUGUST AND SEPTEMBER. BOTH VENTURI/SPRAY TOWER AND TCA SYSTEMS WERWE OPERATED ON LIMESTONE SLURRY WITH HIGH FLYASH LOADING.
TENNESSEE VALLEY AUTHORITY SHAWNEE 10B 10 MW - RETROFIT COAL; 2.9% SULFUR, 15.8% ASH CHEMICO LIME/LIMESTONE STARTUP 4/72	REFER TO THE BACKGROUND INFORMATION IN SECTION 3 OF THIS REPORT. THIS VENTURI/SPRAY TOWER LIME/LIMESTONE SCRUBBING SYSTEM HAS BEEN OPERATIONAL SINCE APRIL 1972. THIS TEST PROGRAM IS FUNDED BY THE EPA WITH TVA AS THE CONSTRUCTOR AND FACILITY OPERATOR. THE BECHTEL CORP. OF SAN FRANCISCO IS THE MAJOR CONTRACTOR, TEST DIRECTOR, AND REPORT WRITER. TESTING WITH ADIPIC ACID AS ADDITIVE FOR IMPROVING SO2 REMOVAL EFFICIENCY CONTINUED THROUGH AUGUST AND SEPTEMBER. BOTH VENTURI/SPRAY TOWER AND TCA SYSTEMS WERE OPERATED ON LIMESTONE SLURRY WITH HIGH FLYASH LOADING.
TENNESSEE VALLEY AUTHORITY WIDOWS CREEK 7 575 MW - RETROFIT COAL; 3.7% SULFUR COMBUSTION ENGINEERING LIMESTONE STARTUP 10/80	TENNESSEE VALLEY AUTHORITY ANNOUNCED THAT A CONTRACT HAS BEEN AWARDED TO COMBUSTION ENGINEERING FOR A LIMESTONE SLURRY SPRAY TOWER FGD SYSTEM. THE FGD SYSTEM WILL TREAT HIGH SULFUR COAL FLUE GAS. THE SPRAY TOWER ABSORBERS WILL BE CONSTRUCTED OF 317L STAINLESS STEEL. THE NO. 7 UNIT FIRES COAL WITH THE SAME CHARACTERISTICS AS THE COAL FIRED IN THE NO. 8 UNIT. INITIAL OPERATIONS ARE SCHEDULED FOR OCTOBER 1980. THE FGD SYSTEM IS CURRENTLY UNDER CONSTRUCTION.
TENNESSEE VALLEY AUTHORITY WIDOWS CREEK 8 550 MW - RETROFIT COAL; 3.7% SULFUR, 17% ASH TENNESSEE VALLEY AUTHORITY LIMESTONE STARTUP 5/77	REFER TO SECTION 3 OF THIS REPORT FOR ADDITIONAL INFORMATION. THE EMISSION CONTROL SYSTEM FOR THIS 550-MW COAL-FIRED POWER-GENERATING UNIT CONSISTS OF EXISTING ELECTROSTATIC PRECIPITATORS FOLLOWED BY FOUR PARALLEL SCRUBBING TRAINS, EACH CAPABLE OF HANDLING 25 PERCENT OF THE BOILER FLUE GAS FROM UNIT 8. EACH TRAIN INCLUDES A RECTANGULAR THROAT VENTURI SCRUBBER AND A GRID-TOWER ABSORBER SUPPLIED BY POLYCON. THE GRID TOWER CAN BE CONVERTED TO A MOBILE-BED TOWER IF GREATER SO2 REMOVAL IS REQUIRED.

SECTION 2
STATUS OF FGD SYSTEMS

UNIT IDENTIFICATION	CURRENT STATUS
TEXAS MUNICIPAL POWER AGENCY GIBBONS CREEK 1 400 MW - NEW LIGNITE; 1.06% SULFUR, 25% ASH COMBUSTION ENGINEERING LIMESTONE STARTUP 1/82	COMBUSTION ENGINEERING WAS AWARDED A CONTRACT TO DESIGN AND SUPPLY A 400-MW LIGNITE-FIRED BOILER, ESP, AND FGD SYSTEM AT GIBBONS CREEK STEAM ELECTRIC STATION UNIT NO. 1. THE BOILER WILL BURN 1.06% SULFUR LIGNITE. FLUE GAS WILL BE CLEANED OF PARTICULATES BY A COLD-SIDE ESP (99.73% EFFICIENCY). SO2 WILL BE REMOVED BY 3 SPRAY TOWER MODULES UTILIZING A LIMESTONE SLURRY (72.5 TO 87.5% EFFICIENCY). A CONTRACT HAS BEEN AWARDED TO IUCS FOR SLUDGE DISPOSAL. CONSTRUCTION IS TO BEGIN IN THE SPRING OF 1979. COMMERCIAL START-UP IS SCHEDULED FOR JANUARY, 1982.
TEXAS POWER & LIGHT SANDOW 4 545 MW - NEW LIGNITE COMBUSTION ENGINEERING LIMESTONE STARTUP 7/80	COMBUSTION ENGINEERING HAS BEEN CHOSEN AS THE BOILER AND FGD VENDOR FOR THIS UNIT. BOILER CONSTRUCTION BEGAN ON SEPTEMBER 9, 1977. PARTICULATE REMOVAL EQUIPMENT WILL BE LOCATED ON THE COLD-SIDE OF THE AIR HEATER. SOME PORTION OF FLUE GAS WILL BYPASS THE SCRUBBER FOR REHEAT. THE SPENT SLURRY WILL BE PONDED AND WATER RECYCLED. FGD CONSTRUCTION IS SCHEDULED TO BEGIN NOVEMBER 1978.
TEXAS POWER & LIGHT TWIN OAKS 1 750 MW - NEW LIGNITE VENDOR NOT SELECTED LIMESTONE STARTUP 8/83	THIS UNIT WILL BE JOINTLY OWNED BY TP&L AND ALCOA. A FIRM DECISION HAS NOT BEEN MADE WHETHER TO INSTALL FGD FACILITIES. THIS IS PRIMARILY DUE TO THE FACT THAT SUCH A DECISION IS NOT YET REQUIRED IN THE UTILITIES PLANNING TIMETABLE.
TEXAS POWER & LIGHT TWIN OAKS 2 750 MW - NEW LIGNITE VENDOR NOT SELECTED LIMESTONE STARTUP 9/84	THIS UNIT WILL BE JOINTLY OWNED BY TP&L AND ALCOA. A FIRM DECISION HAS NOT BEEN MADE WHETHER TO INSTALL FGD FACILITIES. THIS IS PRIMARILY DUE TO THE FACT THAT SUCH A DECISION IS NOT YET REQUIRED IN THE UTILITIES PLANNING TIMETABLE.
TEXAS UTILITIES FOREST GROVE 1 750 MW - NEW LIGNITE VENDOR NOT SELECTED PROCESS NOT SELECTED STARTUP 0/81	TEXAS UTILITIES IS PLANNING A NEW 750-MW UNIT AT THE FOREST GROVE SITE. TWO ESP'S WILL BE INSTALLED FOR PARTICULATE CONTROL. THE UTILITY IS CURRENTLY REQUESTING BIDS FOR AN FGD SYSTEM. START-UP IS SCHEDULED FOR LATE 1981. THE BOILER WILL BE SUPPLIED BY THE BABCOCK & WILCOX COMPANY. THE DESIGN DOES NOT INCLUDE A STACK GAS REHEAT SYSTEM.
TEXAS UTILITIES MARTIN LAKE 1 793 MW - NEW COAL; 0.9% SULFUR, 8% ASH RESEARCH COTTRELL LIMESTONE STARTUP 8/77	REFER TO SECTION 3 OF THIS REPORT FOR ADDITIONAL INFORMATION. THIS NEW 793 MW UNIT FIRES TEXAS LIGNITE CONTAINING 0.9% SULFUR (AVG) AND 8% ASH (AVG). THE UNIT IS EQUIPPED WITH AN EMISSION CONTROL SYSTEM WHICH INCLUDES COLD-SIDE ESP'S AND A LIMESTONE FGD SYSTEM BOTH SUPPLIED BY RESEARCH-COTTRELL. THE FGD SYSTEM CONSISTS OF 6 PACKED/SPRAY TOWER ABSORBERS WHICH TREAT 75% OF THE TOTAL BOILER FLUE GAS. THE REMAINING FLUE GAS IS BYPASSED FOR REHEAT. TOTAL SO2 REMOVAL EFFICIENCY IS 70.5%. THE FLUE GAS CLEANING WASTES ARE STABILIZED AND DISPOSED IN AN ON-SITE, LINED POND.
TEXAS UTILITIES MARTIN LAKE 2 793 MW - NEW COAL; 0.9% SULFUR, 8% ASH RESEARCH COTTRELL LIMESTONE STARTUP 5/78	REFER TO SECTION 3 OF THIS REPORT FOR ADDITIONAL INFORMATION. THIS NEW 793 MW UNIT FIRES TEXAS LIGNITE CONTAINING 0.9% SULFUR (AVG) AND 8% ASH (AVG). THE UNIT IS EQUIPPED WITH AN EMISSION CONTROL SYSTEM CONSISTING OF COLD-SIDE ESP'S AND A LIMESTONE FGD SYSTEM, BOTH SUPPLIED BY RESEARCH-COTTRELL. THE FGD SYSTEM CONSISTS OF 6 PACKED/SPRAY TOWER ABSORBERS THAT TREAT 75% OF THE BOILER FLUE GAS. THE REMAINING GAS IS BYPASSED FOR REHEAT. TOTAL DESIGN SO2 REMOVAL EFFICIENCY IS 70.5%. THE FLUE GAS CLEANING WASTES ARE STABILIZED AND DISPOSED IN AN ON-SITE, LINED POND.
TEXAS UTILITIES MARTIN LAKE 3 793 MW - NEW COAL; 0.9% SULFUR, 8% ASH RESEARCH COTTRELL LIMESTONE STARTUP 12/78	THIS NEW 793-MW POWER GENERATING UNIT WILL FIRE TEXAS LIGNITE CONTAINING 0.9% SULFUR (AVG.) AND 8% ASH (AVG.). TO MEET FEDERAL NSPS, THE UNIT WILL BE EQUIPPED WITH AN EMISSION CONTROL SYSTEM CONSISTING OF COLD-SIDE ESP'S AND A LIMESTONE FGD SYSTEM, BOTH SUPPLIED BY RESEARCH-COTTRELL. THE FGD SYSTEM CONSISTS OF 6 PACKED/SPRAY TOWER ABSORBERS WHICH WILL TREAT 75% OF THE TOTAL BOILER FLUE GAS. THE REMAINING GAS WILL BE BYPASSED FOR REHEAT. TOTAL DESIGN SO2 REMOVAL EFFICIENCY IS 70.5%. THE FLUE GAS CLEANING WASTES WILL BE STABILIZED AND DISPOSED IN AN ON-SITE, LINED POND.

SECTION 2
STATUS OF FGD SYSTEMS

UNIT IDENTIFICATION	CURRENT STATUS
TEXAS UTILITIES MARTIN LAKE 4 793 MW - NEW COAL: 0.9% SULFUR, 8% ASH RESEARCH COTTRELL LIMESTONE STARTUP 11/82	THE CONTRACT FOR THIS FGD SYSTEM HAS BEEN AWARDED TO RESEARCH-COTTRELL. THE BOILER IS NOW BEING ERECTED. START-UP HAS BEEN DELAYED TO EITHER 1985 OR 1986.
TEXAS UTILITIES MONTICELLO 3 750 MW - NEW LIGNITE; 1.5% SULFUR, 19% ASH CHEMICO LIMESTONE STARTUP 5/78	REFER TO SECTION 3 OF THIS REPORT FOR ADDITIONAL INFORMATION. THE EMISSION CONTROL SYSTEM FOR THIS UNIT CONSISTS OF A HIGH EFFICIENCY ESP AND A LIMESTONE FGD SYSTEM. THE ESP (POLLUTION CONTROL-WALTHER) PROVIDES PRIMARY PARTICULATE CONTROL (99.56%). THE FGD SYSTEM CONSISTS OF 3 LIMESTONE SCRUBBING SPRAY TOWERS THAT PROVIDE PRIMARI SO2 CONTROL (74%). THE FGD SYSTEM IS DESIGNED TO TREAT 3MM ACFM OF FLUE GAS RESULTING FROM COAL WITH 1.5% SULFUR, 18.9% ASH AND 0.04% CL. THE FLUE GAS CLEANING WASTES ARE DISPUSED IN AN ON-SITE, LINED POND.
UTAH POWER & LIGHT EMERY 1 400 MW - NEW COAL; 0.5% SULFUR, 9-12% ASH CHEMICO LIME STARTUP 12/78	A CONTRACT HAS BEEN AWARDED TO THE CHEMICO AIR POLLUTION DIVISION FOR A PEBBLE LIME WET SCRUBBING SYSTEM ON THIS NEW UNIT. THE SCRUBBING SYSTEM IS DESIGNED TO OPERATE IN AN OPEN WATER LOOP MODE WITH AN SO2 REMOVAL EFFICIENCY OF 80 PERCENT FOR LOW SULFUR UTAH COAL. PRIMARY PARTICULATE CONTROL WILL BE PROVIDED BY AN ESP UPSTREAM OF THE SCRUBBERS. THE SLUDGE WILL BE STABILIZED WITH FLYASH AND DISPOSED ON THE PLANT SITE. THE A-E DESIGN FIRM FOR THIS PROJECT IS STEARNS-ROGER. CONSTRUCTION IS NOW APPROXIMATELY 85-90% COMPLETE AT THIS UNIT.
UTAH POWER & LIGHT EMERY 2 400 MW - NEW COAL; 0.5% SULFUR, 9-12% ASH CHEMICO LIME STARTUP 6/80	UTAH P&L AWARDED CHEMICO A CONTRACT TO SUPPLY A LIME FGD SYSTEM FOR EMERY 2 DESIGNED TO OPERATE IN AN OPEN WATER LOOP MODE WITH AN SO2 REMOVAL EFFICIENCY OF 80 PERCENT (FIRING LOW SULFUR UTAH COAL). PRIMARY PARTICULATE CONTROL WILL BE PROVIDED BY AN ESP UP-STREAM OF THE SCRUBBERS. THE SLUDGE WILL BE STABILIZED WITH FLYASH AND DISPOSED ON THE PLANT SITE. INITIAL BOILER AND FGD SYSTEM START-UP IS SCHEDULED FOR JUNE 1980. BOILER CONSTRUCTION HAS BEGUN. THIS UNIT WILL BE IDENTICAL TO EMERY 1.
UTAH POWER & LIGHT HUNTINGTON 1 415 MW - NEW COAL; 0.5% SULFUR, 10% ASH CHEMICO LIME STARTUP 5/78	REFER TO SECTION 3 OF THIS REPORT FOR ADDITIONAL INFORMATION. CHEMICO WAS THE SUPPLIER OF A LIME SCRUBBING SYSTEM FOR THIS NEW UNIT. PRIMARY PARTICULATE REMOVAL IS PROVIDED BY AN ESP INSTALLED UPSTREAM OF THE WET SCRUBBING SYSTEM. A DAMPER IS USED DURING OPERATION TO ALLOW BETWEEN 10 AND 20 PERCENT OF THE FLUE GAS TO BY-PASS THE FGD SYSTEM. DESIGN REMOVAL EFFICIENCIES FOR SO2 AND PARTICULATE ARE 80 AND 99.5 PERCENT RESPECTIVELY. SLUDGE IS DEWATERED (60% SOLIDS) AND TRUCKED TO AN ON-SITE LANDFILL. INITIAL OPERATIONS AT THIS UNIT BEGAN ON MAY 10, 1978.
VIRGINIA ELECTRIC & POWER MT. STORM 1147 MW - RETROFIT COAL VENDOR NOT SELECTED PROCESS NOT SELECTED STARTUP 0/ 0	THE UTILITY IS CURRENTLY WAITING FOR AN EPA DECISION REGARDING A WEST VIRGINIA STATE EMISSION CONTROL PROPOSAL. PLANS FOR SULFUR DIOXIDE CONTROL ARE TEMPORARILY AT A STANDSTILL PENDING THIS DECISION. IF THE PRESENT PROPOSAL IS ACCEPTED AN FGD SYSTEM MAY NOT BE REQUIRED.
WISCONSIN POWER & LIGHT COLUMBIA 2 527 MW - NEW COAL; 0.8% SULFUR CHEMICO LIME/ALKALINE FLYASH STARTUP 1/80	A CONTRACT HAS BEEN AWARDED TO CHEMICO FOR A LIME/FLYASH FGD SYSTEM. IT WILL CONSIST OF TWO SPRAY MODULES WITH A HOT-SIDE ESP FOR PARTICULATE REMOVAL. A CLOSED LOOP WATER SYSTEM IS ANTICIPATED WITH FLYASH STABILIZATION OF THE SLUDGE. A SLUDGE DISPOSAL POND LOCATED OFF-SITE IS BEING CONSIDERED. THE FGD SYSTEM IS BEING DESIGNED TO TREAT 60% OF THE FLUE GAS RESULTING FROM THE COMBUSTION OF LOW SULFUR COLSTRIP COAL. THE REMAINING 40% WILL BE BYPASSED FOR REHEAT.

SECTION 3
PERFORMANCE DESCRIPTION FOR OPERATIONAL FGD SYSTEMS

UTILITY NAME	ALABAMA ELECTRIC COOP
UNIT NAME	TOMBIGBEE 2
UNIT LOCATION	JACKSON ALABAMA
UNIT RATING	225 MW
FUEL CHARACTERISTICS	COAL: 1.15% SULFUR
FGD VENDOR	PEABODY ENGINEERING
PROCESS	LIMESTONE
NEW OR RETROFIT	NEW
START UP DATE	9/78
EFFICIENCY:	
PARTICULATES (ACTUAL)	
(DESIGN)	99.8 PERCENT
SO2 (ACTUAL)	
(DESIGN)	60.0 PERCENT
WATER MAKE UP	OPEN LOOP 1.10 GPM/MW
SLUDGE DISPOSAL	UNSTABILIZED/SLUDGE POND

OPERATING EXPERIENCE UPDATE:

AUGUST-SEPTEMBER 1978 - INITIAL OPERATION OF THIS UNIT BEGAN DURING THE AUGUST-SEPTEMBER REPORT PERIOD. THE FGD SYSTEM IS CURRENTLY IN THE SHAKEDOWN AND DEBUGGING PHASE OF OPERATION. DUE TO THE RECENT OPERATING STATUS, HOURS OF OPERATION ARE NOT YET AVAILABLE.

SECTION 3
PERFORMANCE DESCRIPTION FOR OPERATIONAL FGD SYSTEMS

UTILITY NAME	ARIZONA ELECTRIC POWER COOP
UNIT NAME	APACHE 2
UNIT LOCATION	COCHISE ARIZONA
UNIT RATING	200 MW
FUEL CHARACTERISTICS	COAL: 0.7% SULFUR, 10% ASH
FGD VENDOR	RESEARCH COTTRELL
PROCESS	LIMESTONE
NEW OR RETROFIT	NEW
START UP DATE	8/78
EFFICIENCY:	
PARTICULATES (ACTUAL)	
(DESIGN)	99.4 PERCENT
SO2 (ACTUAL)	
(DESIGN)	85.0 PERCENT
WATER MAKE UP	OPEN LOOP 9.2 GPM/MW
SLUDGE DISPOSAL	UNSTABILIZED/SLUDGE POND

OPERATING EXPERIENCE UPDATE:

AUGUST-SEPTEMBER 1978 - INITIAL OPERATION OF THE FGD SYSTEM AT THIS UNIT BEGAN IN AUGUST AND IT IS CURRENTLY BEING TESTED. NO INITIAL PROBLEMS HAVE BEEN REPORTED. DUE TO THE RECENT OPERATING STATUS HOURS OF OPERATION ARE NOT YET AVAILABLE.

SECTION 3
PERFORMANCE DESCRIPTION FOR OPERATIONAL FGD SYSTEMS

UTILITY NAME	ARIZONA PUBLIC SERVICE
UNIT NAME	CHOLLA 1
UNIT LOCATION	JOSEPH CITY ARIZONA
UNIT RATING	115 MW
FUEL CHARACTERISTICS	COAL: 0.55% SULFUR, 10% ASH
FGD VENDOR	RESEARCH COTTRELL
PROCESS	LIMESTONE
NEW OR RETROFIT	RETROFIT
START UP DATE	10/73
EFFICIENCY:	
PARTICULATES (ACTUAL)	99.7 PERCENT
(DESIGN)	99.7 PERCENT
SO2 (ACTUAL)	50-60 PERCENT
(DESIGN)	58.5 PERCENT
WATER MAKE UP	OPEN LOOP 1.04 GPM/MW
SLUDGE DISPOSAL	UNSTABILIZED/SLUDGE POND

OPERATING EXPERIENCE UPDATE:

MONTH	RELIABILITY (%) MODULE A	MODULE B	COMMENTS
JAN. 78	97	91	THE FLOODED DISC SCRUBBER TANK HEADER FOR SLURRY LIMESTONE WAS REPAIRED AFTER BEING DAMAGED DURING THE OVERHAUL. THE BOILER WAS OPERATED ONLY 135 HRS. DURING JANUARY AS THE OVERHAUL HAD EXTENDED INTO THIS MONTH. THE A-SIDE AND B-SIDE SERVICE HOURS WERE 131 AND 123 HOURS RESPECTIVELY.
FEB. 78	99	88	SOME MINOR LEAK REPAIRS AFTER THE OVERHAUL/CLEANING TOOK PLACE DURING FEBRUARY. SERVICE HOURS WERE: BOILER = 642, A-SIDE = 636, B-SIDE = 564.
MAR. 78	74	74	ONE FORCED SHUTDOWN OCCURRED ON THE A-SIDE. SERVICE HOURS WERE: BOILER = 744, A-SIDE = 744, B-SIDE = 735.
APR. 78	100	100	A MINOR LEAK REPAIR WAS NECESSARY AFTER AN OVERHAUL/CLEANING. SERVICE HOURS WERE: BOILER = 720, A-SIDE = 667, B-SIDE = 720.
MAY 78	87	98	THERE WERE NO SIGNIFICANT PROBLEMS REPORTED. ONLY GENERAL MAINTENANCE WAS PERFORMED ON THE SYSTEM.
JUNE 78	100	100	NO PROBLEMS WERE REPORTED.
JULY 78	99	100	ONLY ROUTINE MAINTENANCE WAS REQUIRED.
AUG. 78	100	95	REPAIRS WERE NECESSARY TO PLUGGED B-SIDE REHEAT COILS.

SECTION 3
PERFORMANCE DESCRIPTION FOR OPERATIONAL FGD SYSTEMS

UTILITY NAME	ARIZONA PUBLIC SERVICE
UNIT NAME	CHOLLA 2
UNIT LOCATION	JOSEPH CITY ARIZONA
UNIT RATING	250 MW
FUEL CHARACTERISTICS	COAL; 0.55% SULFUR, 10% ASH
FGD VENDOR	RESEARCH COTTRELL
PROCESS	LIMESTONE
NEW OR RETROFIT	NEW
START UP DATE	6/78
EFFICIENCY:	
PARTICULATES (ACTUAL)	
(DESIGN)	99.7 PERCENT
SO2 (ACTUAL)	
(DESIGN)	75.0 PERCENT
WATER MAKE UP	OPEN LOOP
SLUDGE DISPOSAL	UNSTABILIZED/SLUDGE POND

OPERATING EXPERIENCE UPDATE:

APRIL-MAY 1978 - THE SCRUBBER ON UNIT 2 IS NOW WORKING MOST OF THE TIME AND IS THEREFORE CONSIDERED TO BE OPERATIONAL. SOME PROBLEMS HAVE OCCURRED WITH VIBRATIONS THROUGH THE SYSTEM. THE EPA HAS GRANTED THE UTILITY AN EXTENSION FOR COMPLIANCE.

JUNE-JULY 1978 - UNIT 2 IS STILL UNDERGOING SHAKEDOWN AND DEBUGGING OPERATIONS. THE SLURRY RECYCLE PIPING HAS EXPERIENCED CONTINUAL VIBRATION. THE CONTRACTOR HAS BEEN INJECTING NITROGEN (GAS) INTO THE LINES TO DAMPEN THE VIBRATIONS (AIR WAS NOT USED BECAUSE THE SULFITE WOULD BE OXIDIZED TO SULFATE AND RESULT IN SCALE FORMATION IN THE SYSTEM). A PROBLEM HAS ALSO OCCURRED WITH PEELING OF THE CORROSION RESISTANT COATING IN THE DOWNCOMER AREA IN ONE OF THE ABSORBER MODULES.

AUGUST-SEPTEMBER 1978 - SHAKEDOWN/DEBUGGING OPERATIONS CONTINUE. THE SLURRY RECYCLE PIPING IS STILL EXPERIENCING RESONANT VIBRATIONS.

SECTION 3
PERFORMANCE DESCRIPTION FOR OPERATIONAL FGD SYSTEMS

UTILITY NAME	CENTRAL ILLINOIS LIGHT
UNIT NAME	DUCK CREEK 1
UNIT LOCATION	CANTON ILLINOIS
UNIT RATING	400 MW
FUEL CHARACTERISTICS	COAL; 3.3% SULFUR, 8.3% ASH
FGD VENDOR	RILEY STOKER / ENVIRONEERING
PROCESS	LIMESTONE
NEW OR RETROFIT	NEW
START UP DATE	7/78
EFFICIENCY:	
PARTICULATES (ACTUAL)	99.8 PERCENT
(DESIGN)	99.8 PERCENT
SO2 (ACTUAL)	91.6 PERCENT
(DESIGN)	85.0 PERCENT
WATER MAKE UP	CLOSED LOOP 1.5 GPM/MW
SLUDGE DISPOSAL	UNSTABILIZED/SLUDGE POND

OPERATING EXPERIENCE UPDATE:

JUNE-JULY 1978 - ALL 4 MODULES BECAME OPERATIONAL ON JULY 24. THE SYSTEM HAS OPERATED INTERMITTENTLY THROUGHOUT THE PERIOD. MODIFICATIONS WERE MADE TO THE SLURRY TRANSFER TANK, SINCE IT WAS FOUND TO BE UNDER DESIGNED. A PLUGGING PROBLEM OCCURRED IN THE FGD SYSTEM DUE TO COAL FINES BEING MIXED IN WITH THE SLURRY. THIS RESULTED FROM THE USE OF COMMON UNLOADING AND TRANSFER SYSTEMS FOR THE COAL AND LIMESTONE.

PERIOD	TOTAL PERIOD (HR)	BOILER OPERATION (HR)	SYSTEM AVAILABILITY (HR)	SYSTEM CALLED TO OPERATE (HR)	HR. SYSTEM OPERATED
AUG. 78	744	691	333	714	315
AVAILABILITY = 45%					
OPERABILITY = 46%					
RELIABILITY = 44%					
UTILIZATION = 42%					
SEP. 78	720	691	333	714	315
AVAILABILITY = 46%					
OPERABILITY = 46%					
RELIABILITY = 44%					
UTILIZATION = 44%					

PROBLEMS CONTINUED TO EXIST THROUGH AUGUST AND SEPTEMBER WITH THE COMMON COAL AND LIMESTONE UNLOADING FACILITY. SCREEN BASKETS WERE USED TO KEEP COAL PARTICLES OUT OF THE LIMESTONE IN ORDER TO PREVENT NOZZLE PLUGGING. MORE PERMANENT SEPARATOR SYSTEMS ARE BEING STUDIED. DESIGN DEFICIENCIES IN THE SLURRY TRANSFER SYSTEM PREVENTED PROPER FLOW OF THE SLURRY TO THE SCRUBBER MODULE RECYCLE TANKS. THE OLD SYSTEM WAS REMOVED AND A NEW PIPING SYSTEM WAS INSTALLED. NO PROBLEMS HAVE BEEN ENCOUNTERED WITH THE NEW SYSTEM. PLUGGING OF THE RECYCLE PUMP SHUT-OFF VALVES OCCURRED AND THEY ARE BEING REPLACED WITH PINCH VALVES. THE SCRUBBER WASTE WATER SUMP PUMPS HAVE ALSO BEEN PLUG-ING AND NEW PUMPS ARE BEING INVESTIGATED.

SECTION 3
PERFORMANCE DESCRIPTION FOR OPERATIONAL FGD SYSTEMS

UTILITY NAME	COLUMBUS & SOUTHERN OHIO ELEC.
UNIT NAME	CONESVILLE 5
UNIT LOCATION	CONESVILLE OHIO
UNIT RATING	400 MW
FUEL CHARACTERISTICS	COAL: 4.7% SULFUR, 15.1% ASH
FGD VENDOR	AIR CORRECTION DIVISION, UOP
PROCESS	LIME (MG-PROMOTED)
NEW OR RETROFIT	NEW
START UP DATE	1/77
EFFICIENCY:	
PARTICULATES (ACTUAL)	
(DESIGN)	99.6 PERCENT
SO2 (ACTUAL)	
(DESIGN)	89.5 PERCENT
WATER MAKE UP	OPEN LOOP 1.25 GPM/MW
SLUDGE DISPOSAL	STABILIZED/LANDFILL

OPERATING EXPERIENCE UPDATE:

PERIOD	OPERATION TIME (HR) BOILER	A-SIDE	B-SIDE	COMMENTS
JAN. 78		0	0	
ALL INDEX VALUES = 0 PERCENT				
FEB. 78				THE UNIT WAS SHUTDOWN FOR OVERHAUL THROUGH FEBRUARY AND STARTED UP ON MARCH 16.
ALL INDEX VALUES = 0 PERCENT				
MAR. 78	379	72	60	IMPURITIES IN LIME HAVE CAUSED PLUGGING PROBLEMS. PH CONTROLS AND SO2 ANALYSERS HAVE GIVEN SOME OPERATIONAL PROBLEMS.
AVAILABILITY (%) =		20	20	
OPERABILITY (%) =		19	16	
RELIABILITY (%) =		64	54	
UTILIZATION (%) =		10	8	
APR. 78	716	418	425	THE SYSTEM WAS DOWN DUE TO AN EXCESS OF FLOCCULANT IN THE THICKENER. THIS CAUSED A HIGH AMOUNT OF SOLIDS IN THE OVERFLOW THAT RESULTED IN PLUGGING PROBLEMS IN THE ABSORBER MODULES.
AVAILABILITY (%) =		67	65	
OPERABILITY (%) =		58	59	
RELIABILITY (%) =		61	63	
UTILIZATION (%) =		58	59	
MAY 78	720	327	365	THE SYSTEM WAS TAKEN OUT OF SERVICE BECAUSE OF CONTINUED PROBLEMS WITH THE FLOCCULANT FEED SYSTEM. THE THICKENER WAS EMPTIED TO RESTORE PROPER FLOCCULANT BALANCE. FLOCCULANT WAS CLEANED OUT.
AVAILABILITY (%) =		52	54	
OPERABILITY (%) =		45	50	
RELIABILITY (%) =		45	51	
UTILIZATION (%) =		44	49	
JUNE 78	720	269	217	AN FRP PIPING FAILURE IN THE MIST ELIMINATOR WASH SYSTEM OCCURRED IN JUNE.
AVAILABILITY (%) =		48	30	
OPERABILITY (%) =		37	30	
RELIABILITY (%) =		37	30	
UTILIZATION (%) =		37	30	
JULY 78	727	478	240	OUTAGE TIME WAS DUE TO PLUGGING IN THE MIST ELIMINATOR AND SCRUBBER BALL REGIONS.
AVAILABILITY (%) =		66	43	
OPERABILITY (%) =		66	33	
RELIABILITY (%) =		66	33	
UTILIZATION (%) =		64	32	

EPA UTILITY FGD SURVEY: AUGUST 1978 - SEPTEMBER 1978

COLUMBUS & SOUTHERN OHIO ELEC. CONESVILLE 5

PERIOD	BOILER	OPERATION TIME (HR) A-SIDE	B-SIDE	COMMENTS
AUG. 78	667	134	137	FORCED OUTAGE TIME WAS REQUIRED TO REMOVE SCALE FROM THE MIST ELIMINATOR. IT WAS ALSO NECESSARY TO REPLACE SOME OF THE PING PONG BALLS IN THE MODULES.
AVAILABILITY (%) =		18	18	
OPERABILITY (%) =		20	21	
RELIABILITY (%) =		20	21	
UTILIZATION (%) =		18	18	
SEP. 78	707	324	308	DURING THE AUGUST-SEPTEMBER REPORT PERIOD PROBLEMS WERE ENCOUNTERED WITH THE BYPASS DAMPERS. OTHER PROBLEM AREAS INCLUDED BROKEN SLUDGE LINES AND PLUGGING OF THE LIME SLURRY FEED LINES.
AVAILABILITY (%) =		61	54	
OPERABILITY (%) =		46	44	
RELIABILITY (%) =		55	53	
UTILIZATION (%) =		45	43	

SECTION 5
PERFORMANCE DESCRIPTION FOR OPERATIONAL FGD SYSTEMS

UTILITY NAME	COLUMBUS & SOUTHERN OHIO ELEC.
UNIT NAME	CONESVILLE 6
UNIT LOCATION	CONESVILLE OHIO
UNIT RATING	400 MW
FUEL CHARACTERISTICS	COAL: 4.67% SULFUR, 15.1% ASH
FGD VENDOR	AIR CORRECTION DIVISION, UOP
PROCESS	LIME (MG-PROMOTED)
NEW OR RETROFIT	NEW
START UP DATE	6/78
EFFICIENCY:	
PARTICULATES (ACTUAL)	
(DESIGN)	99.6 PERCENT
SO2 (ACTUAL)	
(DESIGN)	89.5 PERCENT
WATER MAKE UP	OPEN LOOP 1.25 GPM/MW
SLUDGE DISPOSAL	STABILIZED/LANDFILL

OPERATING EXPERIENCE UPDATE:

PERIOD	BOILER	OPERATION TIME (HR) A-SIDE	B-SIDE	COMMENTS
JUNE 78	524	173	175	CONTROL OF THE LOUVERED DAMPER OF THE BYPASS SYSTEM WAS LOST. THE RESULT WAS A BACK PRESSURE BUILD UP THAT AUTOMATICALLY TRIPPED THE BOILER OFF. SCRUBBER CONTROLS WERE NOT OPERATING PROPERLY AND NEEDED ADJUSTMENT.
AVAILABILITY (%) =		56	44	
OPERABILITY (%) =		49	33	
RELIABILITY (%) =		51	34	
UTILIZATION (%) =		42	30	
JULY 78	502	186	96	THE LOUVERED DAMPER PROBLEM CONTINUED. SCRUBBER CONTROLS WERE ADJUSTED. THE FRP TRANSFER LINE FROM THE THICKENER TO THE IUCS SYSTEM RUPTURED AS A RESULT OF A WATER HAMMER IN THE LINES AND HAD TO BE REPAIRED. THE LINE BECAME PLUGGED AT A "Y" VALVE DURING DOWN TIME.
AVAILABILITY (%) =		83	70	
OPERABILITY (%) =		37	19	
RELIABILITY (%) =		63	33	
UTILIZATION (%) =		25	13	
AUG. 78	642	318	390	DURING AUGUST PROBLEMS WERE ENCOUNTERED WITH THE SLUDGE LINE AS WELL AS THE BY-PASS CONTROL DAMPERS. THE UTILITY REPORTS THAT THESE ARE TYPICALLY HIGH MAINTENANCE AREAS.
AVAILABILITY (%) =		47	62	
OPERABILITY (%) =		50	60	
RELIABILITY (%) =		66	81	
UTILIZATION (%) =		43	52	
SEP. 78	706	356	388	THE BY-PASS DAMPER CONTROL PROBLEMS CONTINUED THROUGH SEPTEMBER. ANOTHER PROBLEM AREA WAS THE PLUGGING OF THE LIME SLURRY FEED LINES.
AVAILABLITY (%) =		55	69	
OPERABILITY (%) =		50	55	
RELIABILITY (%) =		53	57	
UTILIZATION (%) =		49	54	

SECTION 3
PERFORMANCE DESCRIPTION FOR OPERATIONAL FGD SYSTEMS

UTILITY NAME	DUQUESNE LIGHT
UNIT NAME	ELRAMA POWER STATION
UNIT LOCATION	ELRAMA PENNSYLVANIA
UNIT RATING	510 MW
FUEL CHARACTERISTICS	COAL: 2% SULFUR, 16.5% ASH
FGD VENDOR	CHEMICO
PROCESS	LIME
NEW OR RETROFIT	RETROFIT
START UP DATE	10/75
EFFICIENCY:	
PARTICULATES (ACTUAL)	99.0 PERCENT
(DESIGN)	99.0 PERCENT
SO2 (ACTUAL)	75+ PERCENT
(DESIGN)	83.0 PERCENT
WATER MAKE UP	OPEN LOOP
SLUDGE DISPOSAL	STABILIZED/LANDFILL

OPERATING EXPERIENCE UPDATE:

PERIOD	OPERATING HOURS BOILER	SCRUBBER-ABSORBER VESSELS 101	201	301	401	501	
JAN. 78		700	673	38	181	26	DURING THE PERIOD A NEW WORMER RECYCLE PUMP INSTALLED IN NOVEMBER EXPERIENCED JACK SHAFT BEARING PROBLEMS RESULTING IN THE REMOVAL OF TRAIN 501 FROM SERVICE. BOILER NO. 4 WAS CONNECTED ADDING AN ADDITIONAL 176 MW LOAD TO THE SYSTEM. THE TUCS SLUDGE DISPOSAL FACILITY IS NOW IN SERVICE. A LOW LOAD DEMAND AND THE COAL STRIKE HAVE HAMPERED SCRUBBER OPERATIONS. THERE IS SOME OUTAGE TIME SCHEDULED FOR MARCH.
FEB. 78		204	277	0	107	121	THE SYSTEM WAS SHUTDOWN ON FEB. 11 DUE TO A COAL SHORTAGE. THE FOLLOWING REPAIRS WERE MADE DURING THE OUTAGE WHICH CONTINUED THROUGH MARCH: * BOILER EXIT DAMPERS WERE LINED WITH 316 SS ON AREAS OF HIGH EROSION CAUSED BY FLYASH IMPINGEMENT. * EXPANSION JOINTS IN THE UPSTREAM DUCTWORK WERE SHIELDED BY METAL PLATES WHICH WERE WELDED AT ONE END. * EXPANSION JOINTS IN THE DOWNSTREAM DUCTWORK WERE COMPLETELY REPLACED. * THE DOWNSTREAM DUCTWORK WAS RELINED WITH CEILCOTE. * MODULE 401 INTERNALS WERE CLEANED AND SOME HOLES IN THE UPPER CONICAL REGION WERE REPAIRED. BOILERS 1, 2 AND 4 ARE NOW COMPLETELY CONNECTED TO THE FGD SYSTEM. BOILER 3 IS UNDERGOING AN EXTENSIVE OVERHAUL AND WILL BE CONNECTED TO THE SYSTEM IN LATE APRIL.
MAR. 78	0	0	0	0	0	0	

DUQUESNE LIGHT ELRAMA POWER STATION

OPERATING HOURS

MONTH	BOILER 1	2	3	4	AVG	SCRUBBER-ABSORBER 101	201	301	401	501	AVG
APR. 78	699	528	0	672	475						
MAY 78	723	723	0	740	547						

DURING THE APRIL-MAY PERIOD BOILER NUMBER 3 WAS STILL BEING OVERHAULED. FGD SYSTEM CONSTRUCTION WAS COMPLETED AND PRELIMINARY TESTING VERIFIED SYSTEM SO2 REMOVAL EFFICIENCY.

JUNE 78	691	616	0	662	492
JULY 78	691	640	588	729	662

MODULE 301 WAS PULLED OFF FOR A MAJOR CLEANING OVER THE PERIOD. MIST ELIMINATOR PLUGGING WAS EXPERIENCED AS A RESULT OF LOW PH. THE CHRONIC INABILITY TO CONTROL CHEMISTRY (PH) IS DIRECTLY RELATED TO GRIT BUILD-UP IN THE LIME HANDLING AND SLURRY PREPARATION SYSTEM. THE UTILITY IS CURRENTLY STUDYING WAYS TO TIGHTEN THE WATER BALANCE BY TAKING THICKENER SUPERNATE FOR THE MIST ELIMINATORS INTERMITTENTLY WITH CLEAR SERVICE WATER. A COMPLIANCE TEST SHOULD TAKE PLACE DURING THE NEXT REPORT PERIOD.

AUG. 78	735	601	686	691	678
SEP. 78	676	585	674	720	664

DURING AUGUST MODULES 301 AND 501 WERE TAKEN DOWN FOR CLEANING. THE RUBBER LINING ON THREE FAN HOUSINGS WAS REPAIRED. IT WAS ALSO NECESSARY TO SHUT DOWN THE LIME MIXING BASIN IN ORDER TO CLEAN OUT EXCESSIVE GRIT AND SOLIDS BUILD UP.

SECTION 3
PERFORMANCE DESCRIPTION FOR OPERATIONAL FGD SYSTEMS

UTILITY NAME	DUQUESNE LIGHT
UNIT NAME	PHILLIPS POWER STATION
UNIT LOCATION	SOUTH HEIGHT PENNSYLVANIA
UNIT RATING	410 MW
FUEL CHARACTERISTICS	COAL: 2% SULFUR, 16.5% ASH
FGD VENDOR	CHEMICO
PROCESS	LIME
NEW OR RETROFIT	RETROFIT
START UP DATE	7/73
EFFICIENCY:	
PARTICULATES (ACTUAL)	99.0 PERCENT
(DESIGN)	99.0 PERCENT
SO2 (ACTUAL)	75+ PERCENT
(DESIGN)	83.0 PERCENT
WATER MAKE UP	OPEN LOOP
SLUDGE DISPOSAL	STABILIZED/LANDFILL

OPERATING EXPERIENCE UPDATE:

OPERATING HOURS

MONTH	BOILER 1	2	3	4	5	6	AVG	SCRUBBER-ABSORBER 101	201	301	401	AVG
JAN. 78								627	574	0	484	421
FEB. 78								209	287	18	152	167

AN OUTAGE OCCURRED BETWEEN JAN. 6 AND JAN. 8 WHEN THE STACK DRAIN LEAKS WERE REPAIRED BY SANDBLASTING THE OUTER WALL AND REPLACING THE CARBON STEEL BANDS WITH STAINLESS STEEL BANDS. THE SYSTEM WAS SHUTDOWN ON FEB. 11 DUE TO THE COAL SHORTAGE. THE OUTAGE CONTINUED THROUGH MARCH AND THE SYSTEM IS SCHEDULED TO BE ON LINE BY APRIL 15. DURING THE OUTAGE THE FOLLOWING REPAIRS AND MODIFICATIONS WERE MADE:

- *THE BOILER EXIT DAMPERS WERE LINED WITH 316SS ON AREAS OF HIGH EROSION CAUSED BY FLYASH IMPINGEMENT.
- *EXPANSION JOINTS ON THE INLET DUCTWORK WERE SHIELDED BY METAL PLATES WHICH WERE WELDED AT ONE END.
- *NUMEROUS HOLES IN THE WET GAS DUCT WORK WERE REPAIRED AND THE DUCTS WERE RELINED WITH CEILCOTE.
- *THE THROAT DAMPERS WERE CLEANED ON ALL THE SCRUBBERS.
- *INTERNAL MIST ELIMINATORS WERE CLEANED. THE EXTERNAL MIST ELIMINATORS, WHICH ARE BADLY DETERIORATED, MAY BE REPLACED.
- *THE STACK BRICKLINING WAS INSPECTED AND SOME BRICKS WERE REPLACED AT THE TOP OF THE STACK.

CONSTRUCTION WORK ON ADDITIONAL EQUIPMENT SUCH AS THE THICKENER AND SILOS IS ALMOST COMPLETE. IT WAS NOTED THAT THE CEILCOTE LINER CORDLINE 505AR HAS HELD UP WELL OVER THREE YEARS ON THE CONICAL APEX OF MODULE 401.

MAR. 78							
APR. 78	358	0	562	623	524	0	345
MAY 78	725	389	714	667	690	0	531

THE FGD SYSTEM CAME BACK ON LINE AFTER THE COAL STRIKE IN LATE MARCH. IT IS NOT OPERATING AT FULL LOAD BECAUSE THE NO. 6 BOILER IS STILL OUT AND SHOULD BE BACK ON LINE IN MID-JULY. COMPLIANCE TESTS WILL TAKE PLACE IN JULY, AFTER BOILER 6 IS BACK ON LINE, TO SEE IF THE SYSTEM IS MEETING THE 83% SO2 REMOVAL REQUIREMENT FOR 2% SULFUR COAL. THERE WERE NO HOURS REPORTED FOR THIS PERIOD BECAUSE OF PRELIMINARY TESTING BEING CONDUCTED IN PREPARATION FOR THE COMPLIANCE TESTS. SO FAR, TESTS INDICATE THAT THE SYSTEM WILL COMPLY WITH THE REQUIRED STANDARDS. THE AVAILABILITY FOR ALL FOUR TRAINS WAS BETWEEN 65 AND 75 PERCENT.

DUQUESNE LIGHT PHILLIPS POWER STATION

OPERATING HOURS

MONTH	BOILER 1	2	3	4	5	6	AVG	SCRUBBER-ABSORBER 101	201	301	401	AVG
JUNE 78	632	581	618	720	518	0	512					
JULY 78	476	425	568	544	588	0	434					

THE INTERNAL MIST ELIMINATOR ON MODULE 201 WAS REMOVED AND CLEANED OVER THE PERIOD. THE FGD SYSTEM HAS ACCUMULATED APPROXIMATELY 24,000 HOURS OF OPERATION ON ALL FOUR MODULES SINCE START-UP. THERE HAVE BEEN WATER BALANCE PROBLEMS AT THE UNIT WHICH CONTRIBUTED TO THE OCCURRANCE OF LOW PH AND EVENTUALLY MIST ELIMINATOR PLUGGING. THE MIST ELIMINATOR PLUGGING IS ALSO RELATED TO LOW PH RESULTING FROM LIME HANDLING AND SLURRY PREPARATION SYSTEM FAILURE. GRIT BUILD UP HAS BEEN THE MAJOR SOURCE OF THE REAGENT HANDLING SYSTEM FAILURES. THE UTILITY IS CURRENTLY STUDYING WAYS TO TIGHTEN THE WATER BALANCE BY TAKING THICKENER SUPERNATE FOR THE MIST ELIMINATORS INTERMITTENTLY WITH CLEAR SERVICE WATER. THE COMPLIANCE TEST SHOULD TAKE PLACE DURING THE NEXT REPORT PERIOD.

AUG. 78	636	663	500	627	591	623	607					
SEP. 78	608	599	593	546	146	447	490					

DURING THE AUGUST-SEPTEMBER PERIOD MIST ELIMINATOR CLEANING TOOK PLACE IN ORDER TO CORRECT THE PLUGGING PROBLEM. IN AUGUST THE INTERNAL MIST ELIMINATOR ON MODULE 201 WAS REPLACED. THE LIME MIXING BASIN HAD TO BE SHUTDOWN OVER A WEEKEND SO THAT EXCESSIVE GRIT AND SOLID PARTICLES THAT HAD BUILT UP COULD BE CLEANED OUT. HIGH PRESSURE WATER CLEANING WAS PERFORMED ON MODULES 101 AND 401 AND THE RUBBER LINING ON MODULE 101 WAS REPAIRED. A MAJOR PROBLEM AREA DURING THE PERIOD WAS CAUSED BY INSUFFICIENT AVAILABILITY OF DRY FLYASH TO MIX WITH THE SLUDGE. AS A RESULT THE SLUDGE HAS BEEN LEAKING OUT OF THE TRANSPORT TRUCKS WHILE IN TRANSIT TO THE FINAL DISPOSAL SITE. APPARENTLY NOT ENOUGH FLYASH IS BEING COLLECTED WITH THE PRESENT SYSTEM AND THE UTILITY IS LOOKING INTO THE POSSIBILITY OF REPLACING THEIR CYCLONE COLLECTORS AS A SOLUTION.

SECTION 3
PERFORMANCE DESCRIPTION FOR OPERATIONAL FGD SYSTEMS

UTILITY NAME	GULF POWER
UNIT NAME	SCHOLZ 1B & 2B
UNIT LOCATION	CHATTAHOOCHEE FLORIDA
UNIT RATING	23 MW
FUEL CHARACTERISTICS	COAL: 2% SULFUR
FGD VENDOR	CHIYODA INTERNATIONAL
PROCESS	LIMESTONE
NEW OR RETROFIT	RETROFIT
START UP DATE	8/78
EFFICIENCY:	
PARTICULATES (ACTUAL)	
(DESIGN)	
SO2 (ACTUAL)	
(DESIGN)	
WATER MAKE UP	OPEN LOOP
SLUDGE DISPOSAL	GYPSUM/STACKED, EXISTING POND

OPERATING EXPERIENCE UPDATE:

AUG. 78 OPERATION OF THIS EXPERIMENTAL UNIT BEGAN ON AUGUST 30 AND AVAILABILITY HAS BEEN REPORTED
SEP. 78 TO BE BETTER THAN 99%. HOURS OF OPERATION ARE NOT YET AVAILABLE BUT SHOULD BE FOR THE OCTOBER-NOVEMBER PERIOD.

SECTION 3
PERFORMANCE DESCRIPTION FOR OPERATIONAL FGD SYSTEMS

UTILITY NAME	INDIANAPOLIS POWER & LIGHT
UNIT NAME	PETERSBURG 3
UNIT LOCATION	PETERSBURG INDIANA
UNIT RATING	530 MW
FUEL CHARACTERISTICS	COAL; 3.25% SULFUR, 9.5% ASH
FGD VENDOR	AIR CORRECTION DIVISION, UOP
PROCESS	LIMESTONE
NEW OR RETROFIT	NEW
START UP DATE	10/77
EFFICIENCY:	
PARTICULATES (ACTUAL)	
(DESIGN)	99.3 PERCENT
SO2 (ACTUAL)	
(DESIGN)	80.0 PERCENT
WATER MAKE UP	CLOSED LOOP; 1.66 GPM/MW
SLUDGE DISPOSAL	STABILIZED/SLUDGE POND

OPERATING EXPERIENCE UPDATE:

DECEMBER-JANUARY 1978 - OPERATION OF ALL FOUR MODULES WAS INITIATED IN DECEMBER 1977. A SUCCESSFUL 24-HOUR RUN WAS COMPLETED ON DEC. 16 AND 17 WITH MODULES "B", "C" AND "D" IN OPERATION. "A" MODULE HAD AN INOPERATIVE RECYCLE TANK AGITATOR. REPAIR OF THE AGITATOR WAS COMPLETED ON DEC. 22 AND MODULE A WAS PLACED IN INITIAL OPERATION. A 30-DAY RUN SCHEDULED TO BEGIN JAN. 11 WAS POSTPONED UNTIL MID-MARCH PENDING RESOLUTION OF PROBLEMS ASSOCIATED WITH THE FLY ASH REMOVAL SYSTEM. THE COLD WEATHER NECESSITATED THE ERECTION OF TEMPORARY ENCLOSURES AROUND SEGMENTS OF THE FGD SYSTEM UNTIL THE INSTALLATION OF HEAT TRACING COULD BE COMPLETED.

FEBRUARY-MARCH 1978 - THE MODULES DID NOT OPERATE DURING FEBRUARY AS REPAIRS WERE MADE TO LINES AND VALVES DAMAGED BY FREEZE-UPS DURING THE WINTER. DURING MARCH SOME SCHEDULED REPAIRS WERE MADE WHICH INCLUDED INSTRUMENTATION WORK, INSULATION INSTALLATION AND REPAIR OF A BROKEN PINION GEAR ON THE THICKENER. SYSTEM START-UP IS STILL BEING DELAYED BY PROBLEMS WITH THE FLY ASH HANDLING SYSTEM AND IS NOW EXPECTED TO BE IN MID-APRIL.

APRIL-MAY 1978 - THE UNIT CAME BACK ON LINE IN THE MIDDLE OF APRIL AFTER PROBLEMS WITH THE FLYASH HANDLING SYSTEM WERE CORRECTED. THE SYSTEM OPERATED UNTIL THE MAIN POWER TRANSFORMER FAULTED, CAUSING THE SYSTEM TO GO DOWN. THE OUTAGE LASTED UNTIL JUNE 16. PROBLEMS HAVE ALSO BEEN EXPERIENCED WITH ALL CONTROL VALVES AND PIPING. THE VALVES HAD TO BE SENT BACK TO THE FACTORY FOR MODIFICATIONS.

JUNE-JULY 1978 - THE UNIT IS STILL PROCEEDING WITH SHAKEDOWN AND DEBUGGING OPERATION AS FINAL DESIGN MODIFICATIONS ARE BEING MADE. PREPARATIONS ARE BEING COMPLETED FOR THE COMPLIANCE TEST WHICH HAS NOT YET TAKEN PLACE.

AUGUST-SEPTEMBER 1978 - SHAKEDOWN/DEBUGGING OPERATIONS CONTINUE. THE COMPLIANCE TEST IS NOW SET FOR THE LAST WEEK IN OCTOBER. THE UNIT HAS EXPERIENCED PROBLEMS WITH CONTROLS, FIBERGLASS PIPING AND VALVES.

SECTION 3
PERFORMANCE DESCRIPTION FOR OPERATIONAL FGD SYSTEMS

UTILITY NAME	KANSAS CITY POWER & LIGHT
UNIT NAME	HAWTHORN 3
UNIT LOCATION	KANSAS CITY MISSOURI
UNIT RATING	100 MW
FUEL CHARACTERISTICS	COAL: 2% SULFUR, 12.5% ASH
FGD VENDOR	COMBUSTION ENGINEERING
PROCESS	LIME
NEW OR RETROFIT	RETROFIT
START UP DATE	11/72
EFFICIENCY:	
PARTICULATES (ACTUAL)	99.0 PERCENT
(DESIGN)	99.0 PERCENT
SO2 (ACTUAL)	
(DESIGN)	70.0 PERCENT
WATER MAKE UP	OPEN LOOP 7.0 GPM/MW
SLUDGE DISPOSAL	UNSTABILIZED/SLUDGE POND

OPERATING EXPERIENCE UPDATE:

MONTH	PERIOD HRS.	BOILER HRS.	FGD SYSTEM HRS.	FGD SYSTEM UTILIZATION (%)
FEB. 78	672	167	167	25
MAR. 78	744	406	406	56

DURING FEBRUARY THE UNIT WAS DOWN FOUR TIMES WITH ECONOMIZER AND WATER WALL LEAKS (OUTAGE TIME APROX. 504 HRS). A TWO WEEK OUTAGE WAS SCHEDULED DURING MARCH FOR SEASONAL MAINTENANCE. WATER WALL LEAK REPAIR AS WELL AS ACID CLEANING OF THE BOILER CAUSED ADDITIONAL OUTAGE TIME DURING THE LAST WEEK IN MARCH.

APR. 78	720	548	220	76
MAY 78	744	403	403	42

AN AIR PREHEATER FIRE DISCOVERED ON MAY 12 CAUSED DAMAGES THAT FORCED MODULE A TO BE DOWN THE REST OF THE MONTH.

JUNE 78
JULY 78

NO INFORMATION WAS AVAILABLE FOR THE JUNE-JULY REPORT PERIOD DUE TO A PLANT STRIKE.

AUG. 78
SEP. 78

THE SCRUBBING SYSTEM IS OPERATING ALTHOUGH THE UTILITY IS STILL IN THE MIDST OF A STRIKE. FGD PERFORMANCE FIGURES ARE NOT AVAILABLE. THE UTILITY IS NOT RECORDING FGD SYSTEM OPERATING HOURS DURING THE STRIKE.

SECTION 3
PERFORMANCE DESCRIPTION FOR OPERATIONAL FGD SYSTEMS

UTILITY NAME	KANSAS CITY POWER & LIGHT
UNIT NAME	HAWTHORN 4
UNIT LOCATION	KANSAS CITY MISSOURI
UNIT RATING	100 MW
FUEL CHARACTERISTICS	COAL: 2% SULFUR, 12.5% ASH
FGD VENDOR	COMBUSTION ENGINEERING
PROCESS	LIME
NEW OR RETROFIT	RETROFIT
START UP DATE	8/72
EFFICIENCY:	
PARTICULATES (ACTUAL)	99.0 PERCENT
(DESIGN)	99.0 PERCENT
SO2 (ACTUAL)	
(DESIGN)	70.0 PERCENT
WATER MAKE UP	OPEN LOOP 7.0 GPM/MW
SLUDGE DISPOSAL	UNSTABILIZED/SLUDGE POND

OPERATING EXPERIENCE UPDATE:

MONTH	PERIOD HRS.	BOILER HRS.	FGD SYSTEM HRS.	FGD SYSTEM UTILIZATION (%)
FEB. 78	672	198	198	30
MAR. 78	744	471	471	63

THE UNIT WAS DOWN THREE TIMES DURING FEBRUARY FOR NON-SCRUBBER RELATED PROBLEMS. TWO OTHER OUTAGES WERE THE RESULT OF A FUEL SAFETY TRIP PROBLEM AND GENERAL SCRUBBER MAINTENANCE. IN MARCH THERE WERE THREE ECONOMIZER LEAK OUTAGES (APPOX. 231 HRS) AND THE SCRUBBER REQUIRED AN ADDITIONAL 32 HRS OF OUTAGE TIME FOR MAINTENANCE.

APR. 78	720	288	288	40
MAY 78	744	421	327	44

FGD OUTAGE IN MAY WAS DUE TO CLARIFIER PLUGGING. APRIL OUTAGE TIME WAS SCHEDULED FOR ROUTINE MAINTENANCE AND GENERAL CLEANING.

JUNE 78
JULY 78

NO INFORMATION WAS AVAILABLE FOR THE JUNE-JULY REPORT PERIOD DUE TO A PLANT STRIKE.

AUG. 78
SEP. 78

THE SCRUBBING SYSTEM IS OPERATING ALTHOUGH THE UTILITY IS STILL IN THE MIDST OF A STRIKE. FGD PERFORMANCE FIGURES ARE NOT AVAILABLE. THE UTILITY IS NOT RECORDING FGD SYSTEM OPERATION HOURS DURING THE STRIKE.

SECTION 3
PERFORMANCE DESCRIPTION FOR OPERATIONAL FGD SYSTEMS

UTILITY NAME	KANSAS CITY POWER & LIGHT
UNIT NAME	LA CYGNE 1
UNIT LOCATION	LA CYGNE KANSAS
UNIT RATING	820 MW
FUEL CHARACTERISTICS	COAL: 5% SULFUR, 25% ASH
FGD VENDOR	BABCOCK & WILCOX
PROCESS	LIMESTONE
NEW OR RETROFIT	NEW
START UP DATE	2/73
EFFICIENCY:	
PARTICULATES (ACTUAL)	98.2 PERCENT
(DESIGN)	98.0 PERCENT
SO2 (ACTUAL)	80.1 PERCENT
(DESIGN)	76.0 PERCENT
WATER MAKE UP	OPEN LOOP 1.4 GPM/MW
SLUDGE DISPOSAL	UNSTABILIZED/SLUDGE POND

OPERATING EXPERIENCE UPDATE:

MONTH	BOILER HOURS	PERCENT AVAILABILITY-BY MODULE A	B	C	D	E	F	G	H	AVERAGE
FEB. 78	578	92	93	95	94	91	97	96	93	94
MAR. 78	741	95	95	90	95	94	95	89	93	93

FGD OPERATIONS AT LA CYGNE WERE CONDUCTED DURING THE REPORT PERIOD WITH NO MAJOR PROBLEMS ENCOUNTERED.

APR. 78	620	91	92	93	91	90	92	91	91	91

THE BOILER WAS DOWN A TOTAL OF 100 HOURS IN APRIL. THIS TIME INCLUDED THREE OUTAGES DUE TO BOILER LEAKS AND LACK OF LOAD REQUIREMENT. MODIFICATIONS TO THE FGD SYSTEM WERE PERFORMED DURING THE OUTAGES WHICH INCLUDED CHANGING THE REHEAT TUBE BUNDLES.

MAY 78	593	89	92	92	93	92	91	93	86	91

IN MAY THE BOILER WAS DOWN TWICE FOR A TOTAL OF 151 HOURS. OUTAGES WERE AGAIN CAUSED BY BOILER LEAKS. GENERAL MAINTENANCE AND REPAIRS ON THE FGD SYSTEM WERE CONTINUED.

JUNE 78	15									
JULY 78	341	88	97	92	94	88	93	93	95	93

THE UNIT WAS ONLY UP FOR 15 HOURS IN JUNE. IN THE FIRST PART OF JUNE THERE WERE BOILER TUBE LEAKS. FROM JUNE 8 TO JUNE 17 A BOILER OUTAGE WAS NECESSARY FOR GENERATOR REPAIR. THE UNIT OPERATED THROUGHOUT JULY.

AUG. 78	577	92	93	95	96	93	94	95	95	94
SEP. 78	720	96	96	96	96	96	96	95	97	96

THERE WERE TWO BOILER OUTAGES (NON-FGD-RELATED) IN AUGUST. THE FGD SYSTEM REQUIRED ONLY ROUTINE MAINTENANCE. THE UTILITY IS EXPERIMENTING WITH A 3-STAGE MIST ELIMINATOR AND SOME DOUBLE STAGE MIST ELIMINATORS. BETTER MIST ELIMINATION AT THE SCRUBBER EXIT WOULD REDUCE THE FREQUENCY OF REHEATER CLEANING. OVER THE JULY-SEPTEMBER PERIOD TWO I.D. FAN ROTORS HAVE BEEN REPLACED.

SECTION 3
PERFORMANCE DESCRIPTION FOR OPERATIONAL FGD SYSTEMS

UTILITY NAME	KANSAS POWER & LIGHT
UNIT NAME	JEFFREY 1
UNIT LOCATION	ST MARYS KANSAS
UNIT RATING	680 MW
FUEL CHARACTERISTICS	COAL; 0.3% SULFUR, 7.5% ASH
FGD VENDOR	COMBUSTION ENGINEERING
PROCESS	LIMESTONE
NEW OR RETROFIT	NEW
START UP DATE	8/78
EFFICIENCY:	
PARTICULATES (ACTUAL)	
(DESIGN)	99.0 PERCENT
SO2 (ACTUAL)	
(DESIGN)	60.0 PERCENT
WATER MAKE UP	CLOSED LOOP .59 GPM/MW
SLUDGE DISPOSAL	UNSTABILIZED/SLUDGE POND

OPERATING EXPERIENCE UPDATE:

AUGUST-SEPTEMBER 1978 - THE SYSTEM IS PRESENTLY IN THE SHAKEDOWN PHASE OF OPERATION. EACH OF THE SIX MODULES OPERATED DURING THIS PERIOD NO MAJOR PROBLEMS REPORTED. INTEGRATED OPERATION OF THE SYSTEM IS EXPECTED TO BEGIN DURING THE FIRST HALF OF OCTOBER.

SECTION 3
PERFORMANCE DESCRIPTION FOR OPERATIONAL FGD SYSTEMS

UTILITY NAME	KANSAS POWER & LIGHT
UNIT NAME	LAWRENCE 4
UNIT LOCATION	LAWRENCE KANSAS
UNIT RATING	125 MW
FUEL CHARACTERISTICS	COAL: 0.5% SULFUR, 10% ASH
FGD VENDOR	COMBUSTION ENGINEERING
PROCESS	LIMESTONE
NEW OR RETROFIT	RETROFIT
START UP DATE	12/68
EFFICIENCY:	
PARTICULATES (ACTUAL)	99+ PERCENT
(DESIGN)	98.9 PERCENT
SO2 (ACTUAL)	90+ PERCENT
(DESIGN)	73.0 PERCENT
WATER MAKE UP	OPEN LOOP
SLUDGE DISPOSAL	UNSTABILIZED/SLUDGE POND

OPERATING EXPERIENCE UPDATE:

FEB. 78
MAR. 78 — THE FGD SYSTEM OPERATED DURING THE REPORT PERIOD WITH NO MAJOR PROBLEMS. THE THICKENER UNDERFLOW LINE IS STILL FROZEN AND TWO 3 INCH DIAMETER FIRE HOSES ARE BEING USED TO PUMP THE UNDERFLOW SOLIDS TO THE POND.

APR. 78
MAY 78 — THE UTILITY REPORTED THAT THE FGD SYSTEM AND THE BOILER RAN WITHOUT ANY OUTAGES DURING THIS PERIOD.

JUNE 78
JULY 78 — THE BOILER AND FGD SYSTEM BOTH OPERATED THROUGHOUT THE PERIOD. THE UTILITY REPORTED THAT THE OPERATING HOURS EQUALED THE HOURS IN THE PERIOD.

AUG. 78
SEP. 78 — HOURS OF OPERATION WERE NOT AVAILABLE BUT THE UTILITY REPORTED THAT THE SYSTEM RAN WITH NO FORCED OUTAGES DURING THE PERIOD. THE UNIT WAS DOWN THE LAST WEEK AND A HALF IN SEPTEMBER FOR A SCHEDULED FALL TURBINE/BOILER OUTAGE. ROUTINE MAINTENANCE INCLUDED BOILER AND TURBINE CLEANING AND REPAIR.

SECTION 3
PERFORMANCE DESCRIPTION FOR OPERATIONAL FGD SYSTEMS

UTILITY NAME	KANSAS POWER & LIGHT
UNIT NAME	LAWRENCE 5
UNIT LOCATION	LAWRENCE KANSAS
UNIT RATING	400 MW
FUEL CHARACTERISTICS	COAL; 0.5% SULFUR, 10% ASH
FGD VENDOR	COMBUSTION ENGINEERING
PROCESS	LIMESTONE
NEW OR RETROFIT	NEW
START UP DATE	11/71
EFFICIENCY:	
PARTICULATES (ACTUAL)	
(DESIGN)	98.9 PERCENT
SO2 (ACTUAL)	
(DESIGN)	52.0 PERCENT
WATER MAKE UP	OPEN LOOP
SLUDGE DISPOSAL	UNSTABILIZED/SLUDGE POND

OPERATING EXPERIENCE UPDATE:

FEB. 78 MAR. 78 THE ORIGINAL FGD SYSTEM WAS PULLED OFF LINE ON MARCH 20 SO THAT THE NEW SCRUBBER-ABSORBER SYSTEM COULD BE TIED INTO THE GAS PATH. THIS NEW SYSTEM CONSISTS OF TWO MODULES EACH WITH A ROD SECTION FOR PARTICULATE REMOVAL AND A SPRAY TOWER FOR SO2 REMOVAL. THE CAPACITY IS 210 MW EACH. INITIAL OPERATION SHOULD BEGIN BY THE FIRST OF MAY.

APR. 78 MAY 78 THE NEW UNIT WENT IN SERVICE ON APRIL 14 AND HAS OPERATED WITH NO OUTAGES SINCE START-UP.

JUNE 78 JULY 78 THE BOILER OPERATED ALL BUT TWO DAYS OF THE JUNE-JULY PERIOD. THE TWO DAYS OF OUTAGE TIME IN JUNE WERE DUE TO A BOILER DRAIN LINE LEAK. THE FGD SYSTEM OPERATED THE ENTIRE TIME THE BOILER WAS ON-LINE. NO PROBLEMS WERE REPORTED.

AUG. 78 SEP. 78 THE SYSTEM RAN WITH NO FORCED OUTAGES DURING THE AUGUST-SEPTEMBER PERIOD. THE UNIT WAS TAKEN DOWN AT THE END OF SEPTEMBER FOR A SCHEDULED TWO WEEK TURBINE/BOILER OUTAGE. ROUTINE MAINTENANCE IS BEING PERFORMED ON THE BOILER AND TURBINE.

EPA UTILITY FGD SURVEY: AUGUST 1978 - SEPTEMBER 1978

SECTION 3
PERFORMANCE DESCRIPTION FOR OPERATIONAL FGD SYSTEMS

UTILITY NAME KENTUCKY UTILITIES

UNIT NAME GREEN RIVER 1,2 & 3

UNIT LOCATION CENTRAL CITY KENTUCKY

UNIT RATING 64 MW

FUEL CHARACTERISTICS COAL: 3.7% SULFUR, 11.0% ASH

FGD VENDOR AMERICAN AIR FILTER

PROCESS LIME

NEW OR RETROFIT RETROFIT

START UP DATE 9/75

EFFICIENCY:

PARTICULATES	(ACTUAL)	99.7 PERCENT
	(DESIGN)	99.7 PERCENT
SO2	(ACTUAL)	80-90 PERCENT
	(DESIGN)	80.0 PERCENT

WATER MAKE UP OPEN LOOP 1.20 GPM/MW

SLUDGE DISPOSAL UNSTABILIZED/SLUDGE POND

OPERATING EXPERIENCE UPDATE:

PERIOD	TOTAL PERIOD (HR)	BOILER OPERATION (HR)	MODULE AVAILABILITY (HR)	MODULE CALLED TO OPERATE (HR)	HR. MODULE OPERATED
JAN. 78	744	537	722	537	170

AVAILABILITY = 23%
RELIABILITY = 32%
OPERABILITY = 32%
UTILIZATION = 23%

DURING THE MONTHS OF DECEMBER AND JANUARY NUMEROUS FREEZE-UPS OCCURED. AS ONE COMPONENT WAS THAWED ANOTHER WOULD FREEZE. THE ABSORBER WAS AVAILABLE FOR FGD OPERATIONS BUT COULD NOT BE UTILIZED BECAUSE THE SLURRY LINE TO THE POND FROZE. THE UNIT WENT DOWN AFTER ABOUT 170 HOURS OF OPERATION IN JANUARY. BECAUSE OF EMERGENCY CONDITIONS THE UTILITY CHOSE TO CONCENTRATE THEIR MAINTENANCE CREWS ON POWER GENERATION RATHER THAN FGD OPERATION. UNDER NORMAL CONDITIONS THE RELATIVELY MINOR FGD SYSTEM PROBLEMS WOULD HAVE BEEN SOLVED MORE QUICKLY. IN LIGHT OF THIS THE SYSTEM COULD HAVE BEEN CONSIDERED AVAILABLE THROUGHOUT MOST OF THE PERIOD CONCERNED.

FEB. 78	672	672	672	0	0

AVAILABILITY = 100%
RELIABILITY = UNDEFINED
OPERABILITY = 0%
UTILIZATION = 0%

DURING THE FREEZE UP NUMEROUS GASKETS WERE TORN THROUGHOUT THE SYSTEM. THE SYSTEM WAS SHUT DOWN COMPLETELY FOR REPAIR WORK.

MAR. 78	744	669	744	0	0

AVAILABILITY = 100%
RELIABILITY = UNDEFINED
OPERABILITY = 0%
UTILIZATION = 0%

REPAIR WORK WILL CONTINUE UNTIL LATE APRIL 78 WHEN THE SCRUBBER-ABSORBER SYSTEM IS EXPECTED BACK ON LINE.

APR. 78	720	295	296	295	296

AVAILABILITY = 41%
RELIABILITY = 99%
OPERABILITY = 99%
UTILIZATION = 41%

KENTUCKY UTILITIES GREEN RIVER 1,2 & 3

PERIOD	TOTAL PERIOD (HR)	BOILER OPERATION (HR)	MODULE AVAILABILITY (HR)	MODULE CALLED TO OPERATE (HR)	HR. MODULE OPERATED
MAY 78	744	474	474	473	474

AVAILABILITY = 64%
RELIABILITY = 100%
OPERABILITY = 100%
UTILIZATION = 64%

THE SCREENS ON THE SUCTION SIDE OF THE PUMPS THAT PUMP THE SLURRY FROM THE PREP ROOM TO THE NOZZLES EXPERIENCED PLUGGING PROBLEMS. THE SCREENS GET PLUGGED WITH LARGE GRIT IN THE SLURRY AND ARE SUCKED OUT OF POSITION BY THE PUMPS. THE UTILITY REPORTED THAT THIS TENDS TO BE A RE-OCCURRING PROBLEM.

JUNE 78	720	525	524	524	524

AVAILABILITY = 75%
RELIABILITY = 100%
OPERABILITY = 100%
UTILIZATION = 75%

BOILER AND FGD SYSTEM OUTAGES DURING JUNE WERE FOR ROUTINE MAINTENANCE.

JULY 78	744	103	99	99	99

AVAILABILITY = 13%
RELIABILITY = 100%
OPERABILITY = 96%
UTILIZATION = 13%

BOILER AND FGD SYSTEM OUTAGES DURING JULY WERE FOR ROUTINE MAINTENANCE.

AUG. 78	744	207	454	207	205

AVAILABILITY = 61%
RELIABILITY = 99%
OPERABILITY = 99%
UTILIZATION = 28%

THE UNIT WAS DOWN FROM AUGUST 1 UNTIL AUGUST 12 AS A RESULT OF BLEED PUMP PROBLEMS. ROUTINE MAINTENANCE ALSO CONTINUED THROUGH THE MIDDLE OF THE MONTH.

SEP. 78	720	305	546	298	298

AVAILABILITY = 76%
RELIABILITY = 100%
OPERABILITY = 98%
UTILIZATION = 41%

BECAUSE OF PLUGGING PROBLEMS THE FGD SYSTEM WAS OPERATED AT APPROXIMATELY ONE THIRD OF TOTAL CAPACITY THROUGHOUT SEPTEMBER.

SECTION 3
PERFORMANCE DESCRIPTION FOR OPERATIONAL FGD SYSTEMS

UTILITY NAME	LOUISVILLE GAS & ELECTRIC
UNIT NAME	CANE RUN 4
UNIT LOCATION	LOUISVILLE KENTUCKY
UNIT RATING	178 MW
FUEL CHARACTERISTICS	COAL: 3.75% SULFUR, 15.5% ASH
FGD VENDOR	AMERICAN AIR FILTER
PROCESS	LIME (CARBIDE)
NEW OR RETROFIT	RETROFIT
START UP DATE	8/76

EFFICIENCY:

PARTICULATES	(ACTUAL)	99.0 PERCENT
	(DESIGN)	99.0 PERCENT
SO2	(ACTUAL)	86-89 PERCENT
	(DESIGN)	85.0 PERCENT

WATER MAKE UP	OPEN LOOP .56 GPM/MW
SLUDGE DISPOSAL	STABILIZED/SLUDGE POND

OPERATING EXPERIENCE UPDATE:

PERIOD	HOURS	BOILER (HR)	FGD SYSTEM (HR)	PERFORMANCE FACTORS (%) OPERABILITY	UTILIZATION
FEB. 78	672	0	0	0	0
MAR. 78	744		249		34

THE UNIT WAS DOWN THE ENTIRE MONTH OF FEBRUARY DUE TO THE COAL SHORTAGE AND A LACK OF AVAILABLE LIME RESULTING FROM THE SEVERE WINTER WEATHER. THE UNIT CAME BACK ON LINE MARCH 21 AFTER WHICH TIME THE FGD SYSTEM WAS ON LINE DURING 95% OF THE BOILER HOURS THROUGH THE END OF MARCH.

APR. 78	720	303	303	100	47

DURING APRIL THE BOILER WAS DOWN FOR REPAIRS. THE UTILITY REPORTED THAT THE AVAILABILITY AND RELIABILITY WERE BOTH 100%.

MAY 78	744	352	115	35	12

THE BOILER WAS DOWN AGAIN IN MAY FOR REPAIRS. DURING THE BOILER OUTAGE A NUMBER OF MODIFICATIONS WERE MADE TO THE DAMPERS IN THE FGD SYSTEM. THE UTILITY REPORTED THAT THE FGD SYSTEM HAS BEEN RUNNING WELL SINCE THE MODIFICATIONS TOOK PLACE. THE AVAILABILITY AND RELIABILITY FOR MAY WERE 31 AND 35 PERCENT RESPECTIVELY.

JUNE 78	720	720	715	99	99
JULY 78	744	687	678	99	91

NO FGD SYSTEM RELATED OUTAGES WERE REPORTED BY THE UTILITY FOR THE JUNE-JULY PERIOD.

AUG. 78	744	744	701	94	94
SEP. 78	720	138	138	100	19

THERE WERE NO FGD FORCED OUTAGES DURING THE AUGUST-SEPTEMBER REPORT PERIOD. THE BOILER WAS DOWN DURING SEPTEMBER FOR TUBE REPAIRS.

SECTION 3
PERFORMANCE DESCRIPTION FOR OPERATIONAL FGD SYSTEMS

UTILITY NAME	LOUISVILLE GAS & ELECTRIC
UNIT NAME	CANE RUN 5
UNIT LOCATION	LOUISVILLE KENTUCKY
UNIT RATING	183 MW
FUEL CHARACTERISTICS	COAL: 3.75% SULFUR, 15.5% ASH
FGD VENDOR	COMBUSTION ENGINEERING
PROCESS	LIME (CARBIDE)
NEW OR RETROFIT	RETROFIT
START UP DATE	12/77
EFFICIENCY:	
PARTICULATES (ACTUAL)	
(DESIGN)	99.0 PERCENT
SO2 (ACTUAL)	
(DESIGN)	85.0 PERCENT
WATER MAKE UP	OPEN LOOP
SLUDGE DISPOSAL	STABILIZED/SLUDGE POND

OPERATING EXPERIENCE UPDATE:

DECEMBER-JANUARY 1978 - OPERATION OF THE FGD SYSTEM AT CANE RUN 5 BEGAN ON DECEMBER 29. INITIAL OPERATIONS WERE NOT CONTINUOUS. DURING OPERATION SOME OF THE CONTROLS WERE NOT WORKING PROPERLY AND MODIFICATIONS WERE NECESSARY.

FEBRUARY-MARCH 1978 - THE PLANT REMAINED OFF LINE THROUGHOUT FEBRUARY AND THEN RE-STARTED ON MARCH 24. THE BOILER OPERATED APPROXIMATELY 182 HOURS THROUGH THE END OF MARCH WITH THE FGD SYSTEM OPERATING APPROXIMATELY 91 HOURS. VARIOUS INITIAL START-UP PROBLEMS WERE STILL BEING ENCOUNTERED CAUSING FGD SYSTEM OUTAGES.

PERIOD	HOURS	BOILER (HR)	FGD SYSTEM (HR)	PERFORMANCE FACTORS (%) OPERABILITY	UTILIZATION
APR. 78	720	669	648	97	90
MAY 78	744	432	364	84	49

FGD SYSTEM MODIFICATIONS WERE MADE DURING THIS PERIOD IN PREPARATION FOR PERFORMANCE TESTS. TESTING TOOK PLACE BUT EPA TEST METHODS WERE NOT FOLLOWED ACCURATELY AND THE PROCESS OF DATA ACQUISITION WAS HANDLED POORLY BY DATA CREWS. THE UTILITY WAS CONFIDENT THAT HAD THE CREWS TAKEN THE DATA PROPERLY THE UNIT WOULD HAVE PASSED THE TESTS.

JUNE 78	720	685	590	86	82
JULY 78	744	632	506	80	68

THE UNIT EXPERIENCED REHEATER PROBLEMS OVER THE PERIOD. THE REHEAT COIL (STEAM) INSTALLATION HAS BEEN A CHRONIC PROBLEM AREA. THE BANK OF TUBES AROUND THE DUCT HAS WELDS AT EACH END, WHERE THE COIL FORMS A "U". THESE WELDS HAVE BEEN FAILING EVER SINCE INITIAL OPERATIONS.

AUG. 78	744	540	464	86	62
SEP. 78	720	609	485	80	67

PROBLEMS CONTINUED THROUGH AUGUST AND SEPTEMBER WITH THE REHEAT COIL WELDS. THIS PROBLEM AFFECTED ONLY SCRUBBER MODULE "A".

EPA UTILITY FGD SURVEY: AUGUST 1978 - SEPTEMBER 1978

SECTION 5
PERFORMANCE DESCRIPTION FOR OPERATIONAL FGD SYSTEMS

UTILITY NAME	LOUISVILLE GAS & ELECTRIC
UNIT NAME	MILL CREEK 3
UNIT LOCATION	LOUISVILLE KENTUCKY
UNIT RATING	425 MW
FUEL CHARACTERISTICS	COAL: 3.75% SULFUR, 15.5% ASH
FGD VENDOR	AMERICAN AIR FILTER
PROCESS	LIME (CARBIDE)
NEW OR RETROFIT	NEW
START UP DATE	8/78
EFFICIENCY:	
PARTICULATES (ACTUAL)	
(DESIGN)	99 PERCENT
SO2 (ACTUAL)	
(DESIGN)	85 PERCENT
WATER MAKE UP	OPEN LOOP .35 GPM/MW
SLUDGE DISPOSAL	STABILIZED/SLUDGE POND

OPERATING EXPERIENCE UPDATE:

AUGUST 1978 - INITIAL OPERATIONS BEGAN AT THIS UNIT ON AUGUST 13. DUE TO THE RECENT OPERATING STATUS OF THE SYSTEM HOURS OF OPERATION WERE NOT AVAILABLE FOR AUGUST.

PERIOD	HOURS	BOILER (HR)	FGD SYSTEM (HR)	PERFORMANCE FACTORS (%) OPERABILITY	UTILIZATION
SEP. 78	720	714	576	81	80

DURING THE MONTH OF SEPTEMBER PROBLEMS WERE ENCOUNTERED WITH FRP PIPING AND CERTAIN PUMPS. THE PUMP PROBLEMS WERE RELATED TO BEARING AND SHAFT FAILURES.

SECTION 3
PERFORMANCE DESCRIPTION FOR OPERATIONAL FGD SYSTEMS

UTILITY NAME	LOUISVILLE GAS & ELECTRIC
UNIT NAME	PADDYS RUN 6
UNIT LOCATION	LOUISVILLE KENTUCKY
UNIT RATING	65 MW
FUEL CHARACTERISTICS	COAL: 3.75% SULFUR, 15.5% ASH
FGD VENDOR	COMBUSTION ENGINEERING
PROCESS	LIME (CARBIDE)
NEW OR RETROFIT	RETROFIT
START UP DATE	4/73
EFFICIENCY:	
PARTICULATES (ACTUAL)	99.0 PERCENT
(DESIGN)	99.0 PERCENT
SO2 (ACTUAL)	80-99 PERCENT
(DESIGN)	80.0 PERCENT
WATER MAKE UP	OPEN LOOP 0.7 GPM/MW
SLUDGE DISPOSAL	STABILIZED/LANDFILL

OPERATING EXPERIENCE UPDATE:

SEPTEMBER 1977-MARCH 1978 - PADDY'S RUN DID NOT OPERATE DURING THIS PERIOD DUE TO A LACK OF POWER REQUIREMENT. THIS IS A PEAK LOAD UNIT THAT IS TO BE RETIRED SOON AFTER THE MILL CREEK 3 UNIT BECOMES FULLY OPERATIONAL.

APRIL-MAY 1978 - PADDY'S RUN WAS ONLY ON LINE A FEW HOURS DURING THIS PERIOD. NO OPERATIONAL PROBLEMS WERE REPORTED BY THE UTILITY.

JUNE-JULY 1978 - THIS UNIT RAN INTERMITTENTLY FOR ABOUT EIGHT TO TEN DAYS OVER THE JUNE-JULY PERIOD.

AUGUST-SEPTEMBER 1978 - THIS UNIT WAS OPERATED FOR TWO WEEKS IN SEPTEMBER SO THAT TESTING OF A NEW FLOCCULANT COULD BE CARRIED OUT. THE RESULTS OF THE TESTS WILL DETERMINE THE TYPE OF FLOCCULANT THAT WILL BE USED IN THE FUTURE AT THE OTHER LG&E UNITS.

SECTION 3
PERFORMANCE DESCRIPTION FOR OPERATIONAL FGD SYSTEMS

UTILITY NAME	MINNKOTA POWER COOPERATIVE
UNIT NAME	MILTON R. YOUNG 2
UNIT LOCATION	CENTER NORTH DAKOTA
UNIT RATING	450 MW
FUEL CHARACTERISTICS	LIGNITE; 0.7% SULFUR, 6.0% ASH
FGD VENDOR	ADL/COMBUSTION EQUIP ASSOCIATE
PROCESS	LIME/ALKALINE FLYASH
NEW OR RETROFIT	NEW
START UP DATE	9/77
EFFICIENCY:	
PARTICULATES (ACTUAL)	
(DESIGN)	99.6 PERCENT
SO2 (ACTUAL)	
(DESIGN)	75.0 PERCENT
WATER MAKE UP	OPEN LOOP 1.56 GPM/MW
SLUDGE DISPOSAL	UNSTABILIZED/LANDFILL

OPERATING EXPERIENCE UPDATE:

FEBRUARY-MARCH 1978 - BOTH THE BOILERS AND FGD SYSTEM CAME BACK ON LINE FEB. 21 AFTER COMPLETION OF THE TURBINE REPAIRS. ONE SCRUBBER-ABSORBER FORCED DRAFT FAN HAD AN OIL LEAK AND A SHAFT ALIGNMENT PROBLEM. IT WAS TAKEN OFF THE LINE AND SHIPPED TO BUFFALO FORGE CO.'S PLANT FOR REPAIRS. THE AFFECTED MODULE WAS DOWN FROM FEB. 23 THROUGH APRIL 10, WHEN THE REPAIRED UNIT WAS RE-INSTALLED. THE VACUUM FILTER ON THE SECOND SCRUBBER-ABSORBER WAS MALFUNCTIONING, ALLOWING LARGER SIZE PARTICLES TO ESCAPE THE FILTER. THIS CAUSED THE RUBBER LINING DOWNSTREAM TO PEEL WHICH, IN TURN, CREATED A PLUGGING PROBLEM. EIMCO ENGINEERS ARE PRESENTLY STUDYING THE PROBLEM AND HOPE TO INCORPORATE MODIFICATIONS TO IMPROVE THE PERFORMANCE OF THE FILTERS. THE COMPLIANCE TEST HAS AGAIN BEEN RESCHEDULED WITH THE EPA FOR THE END OF MAY.

APRIL-MAY 1978 - COMPLIANCE TESTING TOOK PLACE DURING THE WEEK OF JUNE 5. THE REPORT SHOULD BE AVAILABLE TO THE UTILITY BY THE END OF JUNE. THE UNIT WAS DOWN WITH DAMPER PROBLEMS (DOWN ON THE 24TH OF JUNE). APPARENTLY THE CHAINS THAT PULL THE GUILLOTINE DAMPERS WERE UNDERDESIGNED AND HAVE BEEN REPLACED.

JUNE-JULY 1978 - NO INFORMATION WAS REPORTED BY THE UTILITY FOR THIS REPORT PERIOD.

AUGUST-SEPTEMBER 1978 - OFFICIAL RESULTS OF THE COMPLIANCE TEST PERFORMED ON JUNE 6 ARE STILL NOT AVAILABLE. VARIOUS PROBLEMS WERE ENCOUNTERED WITH THIS SYSTEM DURING THE PERIOD. THE THICKENER HAS BEEN A MAJOR PROBLEM AREA. THE POLYETHYLENE LINER WAS ACCIDENTLY PIERCED DURING REPAIRS AND HAD TO BE PATCHED. BECAUSE OF INTERMITTENT OPERATION, HOURS ARE NOT YET AVAILABLE.

SECTION 3
PERFORMANCE DESCRIPTION FOR OPERATIONAL FGD SYSTEMS

UTILITY NAME	MONTANA POWER
UNIT NAME	COLSTRIP 1
UNIT LOCATION	COLSTRIP MONTANA
UNIT RATING	360 MW
FUEL CHARACTERISTICS	COAL; 0.8% SULFUR, 12% ASH
FGD VENDOR	ADL/COMBUSTION EQUIP ASSOCIATE
PROCESS	LIME/ALKALINE FLYASH
NEW OR RETROFIT	NEW
START UP DATE	11/75

EFFICIENCY:

PARTICULATES	(ACTUAL)	99.5 PERCENT
	(DESIGN)	99.5 PERCENT
SO2	(ACTUAL)	75.0 PERCENT
	(DESIGN)	60.0 PERCENT

WATER MAKE UP	CLOSED LOOP
SLUDGE DISPOSAL	STABILIZED/SLUDGE POND

OPERATING EXPERIENCE UPDATE:

JAN. 78 TOTAL SYSTEM AVAILABILITY = 96%

FEB. 78 TOTAL SYSTEM AVAILABILITY 100%

MAR. 78 TOTAL SYSTEM AVALIABILITY = 92%

APR. 78 TOTAL SYSTEM AVAILABILITY = 100%

MAY 78 TOTAL SYSTEM AVAILABILITY = 66%*
*THIS FIGURE IS BASED UPON 9.92 HOURS OF OPERATION ON TWO SCRUBBERS WHILE UNIT 1 WAS BEING BROUGHT BACK ON LINE AFTER COMPLETION OF ITS ANNUAL OVERHAUL. THE I.D. FAN MOTOR WAS NOT AVAILABLE AT UNIT STARTUP ON THE 1A MODULE.

JUNE 78 TOTAL SYSTEM AVAILABILITY = 76%

JULY 78 TOTAL SYSTEM AVAILABILITY = 96%

EPA UTILITY FGD SURVEY: AUGUST 1978 - SEPTEMBER 1978

SECTION 3
PERFORMANCE DESCRIPTION FOR OPERATIONAL FGD SYSTEMS

UTILITY NAME	MONTANA POWER
UNIT NAME	COLSTRIP 2
UNIT LOCATION	COLSTRIP MONTANA
UNIT RATING	360 MW
FUEL CHARACTERISTICS	COAL: 0.8% SULFUR, 12% ASH
FGD VENDOR	ADL/COMBUSTION EQUIP ASSOCIATE
PROCESS	LIME/ALKALINE FLYASH
NEW OR RETROFIT	NEW
START UP DATE	8/76

EFFICIENCY:

PARTICULATES	(ACTUAL)	99.5 PERCENT
	(DESIGN)	99.5 PERCENT
SO2	(ACTUAL)	75.0 PERCENT
	(DESIGN)	60.0 PERCENT

WATER MAKE UP	CLOSED LOOP
SLUDGE DISPOSAL	STABILIZED/SLUDGE POND

OPERATING EXPERIENCE UPDATE:

JAN. 78 TOTAL SYSTEM AVAILABILITY - 97%

FEB. 78 TOTAL SYSTEM AVAILABILITY = 95%

MAR. 78 TOTAL SYSTEM AVAILABILITY = 89%*
*THIS FIGURE IS BASED UPON THE 17 DAYS OF OPERATION BEFORE THE UNIT WAS SHUT DOWN FOR A SCHEDULED ANNUAL OVERHAUL.

APR. 78 TOTAL SYSTEM AVAILABILITY = 87%*
*THIS FIGURE IS BASED UPON 8 DAYS OF OPERATION IN APRIL AFTER A UNIT OVERHAUL.

MAY 78 TOTAL SYSTEM AVAILABILITY = 99%

JUNE 78 TOTAL SYSTEM AVAILABILITY = 97%

JULY 78 TOTAL SYSTEM AVAILABILITY - 96%

SECTION 3
PERFORMANCE DESCRIPTION FOR OPERATIONAL FGD SYSTEMS

UTILITY NAME	NEVADA POWER
UNIT NAME	REID GARDNER 1
UNIT LOCATION	MOAPA NEVADA
UNIT RATING	125 MW
FUEL CHARACTERISTICS	COAL: 0.5% SULFUR, 8% ASH
FGD VENDOR	ADL/COMBUSTION EQUIP ASSOCIATE
PROCESS	SODIUM CARBONATE
NEW OR RETROFIT	RETROFIT
START UP DATE	4/79
EFFICIENCY:	
PARTICULATES (ACTUAL)	99+ PERCENT
(DESIGN)	99.0 PERCENT
SO2 (ACTUAL)	85-90 PERCENT
(DESIGN)	85.0 PERCENT
WATER MAKE UP	OPEN LOOP 0.40 GPM/MW
SLUDGE DISPOSAL	UNSTABILIZED/SOLAR EVAP POND

OPERATING EXPERIENCE UPDATE:

PERIOD	TOTAL (HR.)	BOILER OPERATION (HR.)	MODULE AVAILABLE (HR.)	HR. CALLED UPON TO OPERATE	OPERATION (HR.)
FEB. 78	672	389	654	309	292

AVAILABILITY = 97%
RELIABILITY = 94%
OPERABILITY = 75%
UTILIZATION = 43%

THE SCRUBBER-ABSORBER SYSTEM WAS OFF-LINE FOR APPROXIMATELY 18 HOURS DURING FEBRUARY DUE TO PLUGGED SENSING LINES AND A DULT HI-LO PRESSURE TRIP. THE BOILER WENT OUT OF SERVICE ON ON FEBRUARY 17 FOR A THREE WEEK OUTAGE.

MAR. 78	744	355	207	355	207

AVAILABILITY = 28%
RELIABILITY = 58%
OPERABILITY = 58%
UTILIZATION = 28%

THE BOILER CAME BACK ON LINE MARCH 16 BUT PROBLEMS WITH THE GUILLOTINE SWITCHES DELAYED START-UP OF THE FGD SYSTEM UNTIL MARCH 22. FGD DOWNTIME WAS APPROXIMATELY 537 HOURS. A PROBLEM WAS ALSO ENCOUNTERED WITH THE REHEAT STEAM REGULATOR DURING MARCH.

APR. 78	720	560	720	541	541

AVAILABILITY = 100%
RELIABILITY = 100%
OPERABILITY = 97%
UTILIZATION = 75%

THERE WERE NO FGD SYSTEM FORCED OUTAGES. ALL DOWNTIME WAS BOILER RELATED (179 HRS.).

MAY 78	744	630	721	605	582

AVAILABILITY = 97%
RELIABILITY = 96%
OPERABILITY = 92%
UTILIZATION = 78%

THE UNIT WAS DOWN 132 HOURS FOR A PRODUCTION CONTROL OUTAGE, 7 HOURS FOR REPAIRS TO THE CONDENSER, AND 23 HOURS DUE TO HIGH TEMPERATURE ON I.D. FAN BEARING. (OUTAGES WERE BOILER RELATED.)

EPA UTILITY FGD SURVEY: AUGUST 1978 - SEPTEMBER 1978

NEVADA POWER REID GARDNER 1

PERIOD	TOTAL (HR.)	BOILER OPERATION (HR.)	MODULE AVAILABLE (HR.)	HR. CALLED UPON TO OPERATE	OPERATION (HR.)
JUNE 78	720	720	644	644	644

AVAILABILITY = 89%
RELIABILITY = 100%
OPERABILITY = 89%
UTILIZATION = 89%

THERE WAS ONE SCHEDULED FGD OUTAGE TO REPAIR A LEAK ON THE VENTURI WATER BOX.

JULY 78	744	744	744	736	736

AVAILABILITY = 100%
RELIABILITY = 100%
OPERABILITY = 99%
UTILIZATION = 99%

A SCHEDULED FGD OUTAGE WAS REQUIRED TO RECTIFY A HIGH TRAY DIFFERENTIAL PRESSURE PROBLEM. THE TRAY WAS CLEANED OUT DURING THE OUTAGE.

AUG. 78	744	706	698	707	661

AVAILABILITY = 94%
RELIABILITY = 93%
OPERABILITY = 94%
UTILIZATION = 89%

THE SCRUBBER WAS FORCED OFF LINE ON AUGUST 5 BECAUSE OF A LOSS OF THE ASH PANEL CONTROL POWER. THIS LEFT THE UNIT WITHOUT EMERGENCY SPRAY TO THE SCRUBBERS. A SECOND FORCED OUTAGE OCCURRED ON AUGUST 20 WHEN THERE WAS A SCRUBBER VENTURI HIGH TEMP ALARM. THE EXACT CAUSE WAS NOT KNOWN BUT A BOILER TUBE LEAK WAS SUSPECTED. THERE WAS ONE SCHEDULED OUTAGE DURING THE MONTH TO CLEAN THE TRAY.

SEP. 78	720	644	715	651	626

AVAILABILITY = 99%
RELIABILITY = 99%
OPERABILITY = 97%
UTILIZATION = 87%

DURING THE MONTH A BOILER TRIP OCCURRED WHICH WAS CAUSED BY SCRUBBER HIGH DUCT PRESSURE. AS A RESULT, THE UNIT WAS DOWN FOR 5.5 HOURS WHILE THE SCRUBBER PRESSURE SENSING LINES WERE CLEANED. THERE WERE THREE OTHER BOILER RELATED UNIT OUTAGES DURING THE MONTH TOTALING 89 HOURS. A BOILER TUBE LEAK AND THE NUMBER 5 BOILER BURNER WERE REPAIRED.

SECTION 3
PERFORMANCE DESCRIPTION FOR OPERATIONAL FGD SYSTEMS

UTILITY NAME NEVADA POWER

UNIT NAME REID GARDNER 2

UNIT LOCATION MOAPA NEVADA

UNIT RATING 125 MW

FUEL CHARACTERISTICS COAL; 0.5% SULFUR, 8% ASH

FGD VENDOR ADL/COMBUSTION EQUIP ASSOCIATE

PROCESS SODIUM CARBONATE

NEW OR RETROFIT RETROFIT

START UP DATE 4/74

EFFICIENCY:
PARTICULATES (ACTUAL) 99+ PERCENT

(DESIGN) 99.0 PERCENT

SO2 (ACTUAL) 85-90 PERCENT

(DESIGN) 85.0 PERCENT

WATER MAKE UP OPEN LOOP 0.40 GPM/MW

SLUDGE DISPOSAL UNSTABILIZED/SOLAR EVAP POND

OPERATING EXPERIENCE UPDATE:

PERIOD	TOTAL (HR.)	BOILER OPERATION (HR.)	MODULE AVAILABLE (HR.)	HR. CALLED UPON TO OPERATE	OPERATION (HR.)
FEB. 78	672	636	625	632	585

AVAILABILITY = 93%
RELIABILITY = 92%
OPERABILITY = 92%
UTILIZATION = 87%
FGD DOWNTIME DURING FEBRUARY WAS APPROXIMATELY 48 HOURS DUE TO A PLUGGED SENSING LINE AND A DUCT HI-LO PRESSURE TRIP. THE BOILER WAS OUT OF SERVICE 34 HOURS.

MAR. 78	744	672	726	614	595

AVAILABILITY = 98%
RELIABILITY = 97%
OPERABILITY = 89%
UTILIZATION = 80%
THERE WAS ONLY ONE FORCED FGD OUTAGE DURING MARCH WHICH LASTED APPROXIMATELY 18 HOURS. A SCHEDULED BOILER OUTAGE AT THE BEGINNING OF THE MONTH TO REMOVE ASH BUILDUP WAS CANCELLED.

APR. 78	720	320	720	317	317

AVAILABILITY = 100%
RELIABILITY = 100%
OPERABILITY = 98%
UTILIZATION = 44%
THERE WAS ONE SCHEDULED BOILER OUTAGE WHICH LASTED ABOUT 403 HOURS.

MAY 78	744	726	743	726	724

AVAILABILITY = 100%
RELIABILITY = 100%
OPERABILITY = 100%
UTILIZATION = 97%
THE BOILER WAS OFF FOR APPROXIMATELY 18 HOURS FOR REPAIRS ON THE MILL SPOKES. THE 2A SEC. BREAKER TRIPPED AND CAUSED AN OUTAGE OF ABOUT ONE HOUR.

EPA UTILITY FGD SURVEY: AUGUST 1978 - SEPTEMBER 1978

NEVADA POWER REID GARDNER 2

PERIOD	TOTAL (HR.)	BOILER OPERATION (HR.)	MODULE AVAILABLE (HR.)	HR. CALLED UPON TO OPERATE	OPERATION (HR.)
JUNE 78	720	720	718	663	661

AVAILABILITY = 100%
RELIABILITY = 100%
OPERABILITY = 92%
UTILIZATION = 92%

THERE WERE TWO SCHEDULED FGD OUTAGES TO UNPLUG THE TRAYS AND TO CHANGE THE OIL ON THE I.D. FAN. A FORCED FGD OUTAGE OCCURRED WHEN HIGH DUCT PRESSURE CAUSED A BOILER TRIP.

JULY 78	744	676	596	701	555

AVAILABILITY = 80%
RELIABILITY = 79%
OPERABILITY = 82%
UTILIZATION = 74%

THE BOILER WAS OUT OF SERVICE DUE TO A BOILER TUBE LEAK. THERE WAS ALSO A BOILER TRIP DUE TO A HIGH DUCT PRESSURE. THIS WAS CAUSED BY A FAULTY POSITIONER ON THE I.D. FAN CONTROLLER. THE I.D. FAN EXPANSION JOINT ON THE SCRUBBER WAS REPLACED. ANOTHER FGD OUTAGE OCCURRED WHEN A BOLT, WHICH FELL FROM THE FAN, CAUSED VIBRATIONS. A SECOND BOILER TRIP DURING JULY WAS CAUSED BY AN UNDETERMINED SOURCE. THE SUCTION LINE FROM THE VENTURI DISCHARGE LINE TO THE EFFLUENT PUMPS WAS CLEANED OUT, WHEN PLUGGING OCCURRED.

AUG. 78	744	733	603	643	601

AVAILABILITY = 81%
RELIABILITY = 93%
OPERABILITY = 82%
UTILIZATION = 81%

TWO SCHEDULED OUTAGES DURING THE PERIOD WERE NECESSARY TO CLEAN THE SCRUBBER TRAY. A THIRD SCHEDULED OUTAGE WAS NECESSARY TO CLEAN THE NOZZLES ON THE SCRUBBER SPRAY RACK. THE STAINLESS STEEL PIPE TO THE TRAY SPRAY NOZZLES WAS ALSO REPLACED. THERE WERE THREE FORCED OUTAGES DURING THE MONTH. ON AUGUST 1 THE SCRUBBER EXPERIENCED HIGH DUCT PRESSURE. ON AUGUST 3 IT WAS NECESSARY TO TAKE THE SCRUBBER OFF LINE TO REPACK THE VENTURI PUMPS. THE THIRD OUTAGE WAS CAUSED BY A LOSS OF THE ASH PANEL CONTROL POWER. THIS LEFT THE SCRUBBER WITHOUT EMERGENCY SPRAY.

SEP. 78	720	693	720	675	675

AVAILABILITY = 100%
RELIABILITY = 100%
OPERABILITY = 97%
UTILIZATION = 94%

A SCHEDULED SCRUBBER OUTAGE TOOK PLACE DURING THE MONTH IN ORDER TO CLEAN THE TRAY RECYCLE TANK AS WELL AS THE TRAY AND SOME OF THE LINES. THREE OTHER BOILER RELATED OUTAGES WERE CAUSED BY PROBLEMS WITH A 10-KW GENERATOR. CONTROL POWER SURGES WERE BEING CAUSED BY OVERVOLTAGE MOTOR TRIPS.

SECTION 5
PERFORMANCE DESCRIPTION FOR OPERATIONAL FGD SYSTEMS

UTILITY NAME	NEVADA POWER
UNIT NAME	REID GARDNER 5
UNIT LOCATION	MOAPA NEVADA
UNIT RATING	125 MW
FUEL CHARACTERISTICS	COAL: 0.5% SULFUR, 8% ASH
FGD VENDOR	ADL/COMBUSTION EQUIP ASSOCIATE
PROCESS	SODIUM CARBONATE
NEW OR RETROFIT	NEW
START UP DATE	7/76
EFFICIENCY:	
PARTICULATES (ACTUAL)	99+ PERCENT
(DESIGN)	99.0 PERCENT
SO2 (ACTUAL)	85-90 PERCENT
(DESIGN)	85.0 PERCENT
WATER MAKE UP	OPEN LOOP 0.40 GPM/MW
SLUDGE DISPOSAL	UNSTABILIZED/SOLAR EVAP POND

OPERATING EXPERIENCE UPDATE:

PERIOD	TOTAL (HR.)	BOILER OPERATION (HR.)	MODULE AVAILABLE (HR.)	HR. CALLED UPON TO OPERATE	OPERATION (HR.)
FEB. 78	672	619	642	618	588

AVAILABILITY = 96%
RELIABILITY = 95%
OPERABILITY = 95%
UTILIZATION = 88%

DURING FEBRUARY FAULTY WIRING CAUSED A HIGH VENTURI TEMPERATURE RESULTING IN AN INITIAL 16 HOUR FGD SYSTEM OUTAGE. THERE WAS A SECOND OUTAGE OF 13 HOURS TO CHECK THE VENTURI TEMPERATURE INDICATOR. A THIRD OUTAGE WAS CAUSED BY PLUGGING OF THE MIX TANK WHICH MADE IT IMPOSSIBLE TO MIX CHEMICALS.

PERIOD	TOTAL (HR.)	BOILER OPERATION (HR.)	MODULE AVAILABLE (HR.)	HR. CALLED UPON TO OPERATE	OPERATION (HR.)
MAR. 78	744	741	724	738	718

AVAILABILITY = 97%
RELIABILITY = 97%
OPERABILITY = 97%
UTILIZATION = 96%

THE MIX TANK PROBLEM CONTINUED INTO MARCH CAUSING THE ONLY FGD DOWNTIME FOR THE MONTH (APROX. 20 HOURS). A FURNACE HI-LO PRESSURE TRIP CAUSED A BOILER OUTAGE OF 6 HOURS.

PERIOD	TOTAL (HR.)	BOILER OPERATION (HR.)	MODULE AVAILABLE (HR.)	HR. CALLED UPON TO OPERATE	OPERATION (HR.)
APR. 78	720	704	699	650	629

AVAILABILITY = 97%
RELIABILITY = 97%
OPERABILITY = 89%
UTILIZATION = 87%

THE FGD SYSTEM WAS DOWN APPROXIMATELY 21 HOURS FOR REPAIRS ON THE VENTURI EMERGENCY SPRAY SYSTEM. THE BOILER WAS DOWN APPROXIMATELY 70 HOURS DURING APRIL.

PERIOD	TOTAL (HR.)	BOILER OPERATION (HR.)	MODULE AVAILABLE (HR.)	HR. CALLED UPON TO OPERATE	OPERATION (HR.)
MAY 78	744	646	724	514	494

AVAILABILITY = 97%
RELIABILITY = 96%
OPERABILITY = 77%
UTILIZATION = 66%

THERE WAS A SCHEDULED OUTAGE OF 230 HOURS FOR BOILER MAINTENANCE, AND A FORCED OUTAGE OF 20 HOURS DUE TO A FAULTY TEMPERATURE PROBE AT THE VENTURI DURING MAY.

EPA UTILITY FGD SURVEY: AUGUST 1978 - SEPTEMBER 1978

NEVADA POWER REID GARDNER 3

PERIOD	TOTAL (HR.)	BOILER OPERATION (HR.)	MODULE AVAILABLE (HR.)	HR. CALLED UPON TO OPERATE	OPERATION (HR.)
JUNE 78	720	715	720	715	686

AVAILABILITY = 100%
RELIABILITY - 96%
OPERABILITY - 96%
UTILIZATION = 95%

A SCHEDULED FGD OUTAGE OCCURRED WHEN THE FIRE SPRAY SYSTEM WAS OUT OF SERVICE. THERE WAS ALSO A BOILER TRIP (HI-LO FURNACE PRESSURE TRIP).

JULY 78	744	726	744	583	583

AVAILABILITY = 100%
RELIABILITY = 100%
OPERABILITY - 80%
UTILIZATION = 78%

LOW VENTURI FLOW CAUSED ONE OF THREE SCHEDULED FGD OUTAGES. THIS WAS CORRECTED WHEN THE NOZZLES ON THE RACE TRACK WERE CLEANED. ANOTHER OUTAGE OCCURRED WHEN AN INSPECTION OF THE VENTURI TANK AND RACE TRACK WAS REQUIRED. THE TANK AND RACE TRACK NOZZLES WERE CLEANED AND THE RUBBER LINING ON THE VENTURI SPOOL WAS REPLACED. A THIRD OUTAGE WAS REQUIRED TO CLEAN THE VENTURI RACE TRACK. A SCHEDULED OUTAGE, WHICH WAS NOT FGD SYSTEM RELATED, TO CLEAN THE TURBINE LUBE OIL COOLERS ALSO OCCURRED DURING JULY.

AUG. 78	744	736	730	736	721

AVAILABILITY = 98%
RELIABILITY 98%
OPERABILITY - 98%
UTILIZATION - 97%

THERE WAS ONE FORCED BOILER OUTAGE DURING THE MONTH CAUSED BY HIGH FURNACE PRESSURE. THE SCRUBBER WAS FORCED OFF LINE ON AUGUST 28 DUE TO HIGH SCRUBBER FAN OUTLET PRESSURE. THE SCRUBBER PRESSURE SENSING LINE WAS CLEANED. ON AUGUST 29 THE SCRUBBER EFFLUENT SOLIDS LEVEL WAS HIGH CAUSING AN OUTAGE OF APPROXIMATELY FIVE HOURS. THE SYSTEM WAS FLUSHED TO CORRECT THE PROBLEM.

SEP. 78	720	236	720	228	228

AVAILABILITY = 100%
RELIABILITY = 100%
OPERABILITY = 97%
UTILIZATION = 32%

THIS UNIT WENT DOWN ON SEPTEMBER 10 FOR A TURBINE OVERHAUL WHICH LASTED THROUGH THE END OF THE MONTH. NO SCRUBBER OUTAGES WERE REPORTED FOR THE PERIOD SEPTEMBER 1-10.

SECTION 3
PERFORMANCE DESCRIPTION FOR OPERATIONAL FGD SYSTEMS

UTILITY NAME	NORTHERN INDIANA PUB SERVICE
UNIT NAME	DEAN H. MITCHELL 11
UNIT LOCATION	GARY INDIANA
UNIT RATING	115 MW
FUEL CHARACTERISTICS	COAL; 3.5% SULFUR, 10% ASH
FGD VENDOR	DAVY POWERGAS
PROCESS	WELLMAN LORD
NEW OR RETROFIT	RETROFIT
START UP DATE	11/76
EFFICIENCY:	
PARTICULATES (ACTUAL)	99.5 PERCENT
(DESIGN)	99.5 PERCENT
SO2 (ACTUAL)	91.0 PERCENT
(DESIGN)	90.0 PERCENT
WATER MAKE UP	CLOSED LOOP
SLUDGE DISPOSAL	ELEMENTAL SULFUR PRODUCT

OPERATING EXPERIENCE UPDATE:

MONTH	HOURS IN PERIOD	HOURS AVAILABLE	HOURS CALLED ON TO OPERATE	HOURS OPERATED	AVAILABILITY	RELIABILITY	UTILIZATION
NOV. 77	720	531	596	428	74	72	90

THE FGD UNIT OPERATED FOR 18 CONSECUTIVE DAYS, AVERAGING 90% SO2 REMOVAL WITH 285 LONG TONS OF SULFUR RECOVERED. FGD OPERATION WAS INTERRUPTED BY A UNIT 11 BOILER TUBE LEAK AND RESUMPTION OF FGD OPERATION WAS FURTHER DELAYED BY MAINTENANCE IN THE EVAPORATOR SECTION. MAINTENANCE WAS ALSO PERFORMED ON THE FLUE GAS ISOLATION DAMPER, FLUE GAS BOOSTER BLOWER, AND SO2 REDUCTION SECTION.

DEC. 77	768	379	272	0	49	0	0

THE FGD SYSTEM WAS NOT OPERATED DURING THIS PERIOD DUE TO ABNORMAL BOILER OPERATING CONDITONS RELATED TO HIGH SILICA LEVELS IN THE FEED WATER. THE HIGH SILICA LEVELS RSULTED FROM HIGH MAKE-UP WATER REQUIREMENTS DUE IN PART TO A HIGHER THAN NORMAL FGD PLANT USAGE, AS WELL AS UNIT 11 COAL FEED PROBLEMS AND A PRECIPITATOR MALFUNCTION. MAINTENANCE WAS PERFORMED ON THE FG BOOSTER BLOWER AND THE ABSORBER SOLUTION REGENERATION SECTION.

JAN. 78	720	576	0	0	80		0

THE FGD SYSTEM REMAINED DOWN THROUGHOUT JANUARY AS HIGH SILICA LEVELS IN THE UNIT 11 BOILER FEED WATER PERSISTED. MAINTENANCE WAS PERFORMED ON THE UNIT 11 PRECIPITATOR, THE FG BOOSTER BLOWER AND THE FGD SYSTEM SO2 COMPRESSOR.

FEB. 78	720	336	0	0	47		0

THE FGD SYSTEM WAS NOT OPERATED DUE TO ABNORMAL BOILER OPERATING CONDITIONS RELATED TO HIGH SILICA LEVELS IN THE BOILER FEED WATER, COUPLED WITH UNIT 11 COAL FEED PROBLEMS, STOP VALVE PROBLEMS, PRECIPITATOR MALFUNCTION AND A LEAKING BOILER TUBE AND WORK ON THE FLUE GAS ISOLATION DAMPER. MAINTENANCE WAS ALSO PERFORMED ON THE FG BOOSTER BLOWER, THE EVAPORATOR CIRCULATING PUMP AND THE SO2 SUPERHEATER PIPING.

MAR. 78	720	648	281	215	90	77	30

THE FGD SYSTEM OPERATED FOR TEN DAYS. OPERATION WAS INTERRUPTED BY SHUTDOWN OF THE UNIT 11 BOILER FOR REPAIR OF COAL GRINDING MILLS AND PRECIPITATORS. PROPER CONDITIONS COULD NOT BE RE-ESTABLISHED FOR RE-START OF FGD OPERATION BECAUSE OF COAL FEED AND GRINDING PROBLEMS CAUSED BY EXTREMELY POOR QUALITY COAL. MAINTENANCE WAS PERFORMED ON THE BOOSTER BLOWER AND OPERATING PROBLEMS WERE ENCOUNTERED WITH THE FLUE GAS ISOLATION DAMPER.

EPA UTILITY FGD SURVEY: AUGUST 1978 - SEPTEMBER 1978

NORTHERN INDIANA PUBLIC SERVICE DEAN M. MITCHELL

MONTH	HOURS IN PERIOD	HOURS AVAILABLE	HOURS CALLED ON TO OPERATE	HOURS OPERATED	AVAILABILITY	RELIABILITY	UTILIZATION
APR. 78	720	0	288	0	0	0	0

THE FG BOOSTER BLOWER WAS OUT OF SERVICE FOR THIS ENTIRE PERIOD FOR REBLADING. THE FGD SYSTEM WAS INOPERABLE. A FAILURE OF THE FLUE GAS ISOLATION DAMPER ALSO OCCURRED. A NEW SUPPLY OF HIGH SULFUR COAL WAS OBTAINED AND SUCCESSFULLY TESTED ON UNIT 11 BOILER. THIS COAL IS EXPECTED TO ALLEVIATE PAST DIFFICULTIES WITH THE COAL FEED AND GRINDING SYSTEM. MAINTENANCE WAS ALSO PERFORMED ON THE BOILER ID FANS, COAL FEEDING AND GRINDING SYSTEM AND THE FGD ABSORBER.

MAY 78	720	368	529	263	51	50	37

THE SO2 RECOVERY PORTION OF THE FGD SYSTEM OPERATED FOR 26 DAYS. THE COMPLETE FGD SYSTEM OPERATED FOR 11 DAYS. OPERATION WAS INTERRUPTED BY FAILURE OF THE FLUE GAS ISOLATION DAMPER, PROBLEMS WITH WET COAL WHICH REQUIRED THAT THE UNIT 11 BOILER OPERATE ON LOW SULFUR COAL FOR A SHORT PERIOD AND PLUGGING OF AN ENTRAINMENT SEPARATOR IN THE SO2 REDUCTION UNIT.

JUNE 78	720	97	521	3	13	1	0

OPERATION OF THE FGD SYSTEM WAS LIMITED BY FAILURE OF THE BOOSTER BLOWER DRIVE TURBINE AND INABILITY OF THE ISOLATION DAMPER TO OPERATE. THE FGD PROCESS FACILITIES, CONSISTING OF THE ABSORBER, EVAPORATOR, SO2 REDUCTION AND PURGE TREATMENT UNITS, WERE AVAILABLE FOR OPERATION FOR ESSENTIALLY THE ENTIRE PERIOD.

JULY 78	720	43	443	17	6	4	2

OPERATION OF THE FGD SYSTEM WAS LIMITED BY IMBALANCE OF THE BOOSTER BLOWER. DUE TO INABILITY OF THE ISOLATION DAMPER TO OPERATE, THIS CONDITION COULD NOT BE CORRECTED UNTIL POWER DEMANDS PERMITTED A SHUT DOWN OF UNIT 11 BOILER. RECURRING FLUCTUATIONS IN THE PRESSURE OF THE MAIN STEAM SUPPLY TO THE FGD SYSTEM ALSO LIMITED OPERATION. FLUE GAS BOOSTER BLOWER PROBLEMS INCLUDED LOW OIL PRESSURE, LEAKING BEARING OIL SEALS AND DRIVE TURBINE GOVERNOR MALFUNCTION. THE FGD PROCESS FACILITIES WERE AVAILABLE FOR OPERATION FOR THE ENTIRE PERIOD.

AUG. 78	720	707	720	707	98	98	98

THE UNIT 11 BOILER OPERATED CONTINUOUSLY ON HIGH SULFUR COAL THROUGHOUT THE PERIOD. THE FGD SYSTEM ACHIEVED FULL OPERATION ON THE FIRST DAY OF THE PERIOD. AFTER PROBLEMS WITH THE BOOSTER BLOWER WERE CORRECTED, IT REMAINED IN FULL OPERATION FOR THE BALANCE OF THE PERIOD WITH THE EXCEPTION OF ONE TWO-HOUR INTERRUPTION DUE TO AN ELECTRICAL MOTOR MALFUNCTION.

SEP. 78	720	319	321	319	44	99	44

THE UNIT 11 BOILER OPERATED ON HIGH SULFUR COAL UNTIL SEPTEMBER 12 WHEN IT WAS SHUT-DOWN FOR AN ANNUAL OVERHAUL. THE BOILER REMAINED DOWN THROUGH THE END OF THE PERIOD. THE FGD SYSTEM CONTINUED IN FULL OPERATION UNTIL SEPTEMBER 12, WITH THE EXCEPTION OF ONE TWO-HOUR INTERRUPTION DUE TO A GOVERNOR MALFUNCTION ON THE SO2 COMPRESSOR DRIVE TURBINE, AND WAS THEN SHUT-DOWN CONCURRENTLY WITH THE UNIT 11 BOILER.

SECTION 3
PERFORMANCE DESCRIPTION FOR OPERATIONAL FGD SYSTEMS

UTILITY NAME NORTHERN STATES POWER

UNIT NAME SHERBURNE 1

UNIT LOCATION BECKER MINNESOTA

UNIT RATING 710 MW

FUEL CHARACTERISTICS COAL: 0.8% SULFUR, 9.5% SULFUR

FGD VENDOR COMBUSTION ENGINEERING

PROCESS LIMESTONE/ALKALINE FLYASH

NEW OR RETROFIT NEW

START UP DATE 3/76

EFFICIENCY:

PARTICULATES	(ACTUAL)	99+ PERCENT
	(DESIGN)	99.0 PERCENT
SO2	(ACTUAL)	50-55 PERCENT
	(DESIGN)	50.0 PERCENT

WATER MAKE UP OPEN LOOP 1.13 GPM/MW

SLUDGE DISPOSAL FORCIBLY OXIDIZED/SLUDGE POND

OPERATING EXPERIENCE UPDATE:

BOILER OPERATION TIME AND MODULE OPERABILITY (%)

PERIOD	BOILER HR.	101	102	103	104	105	106	107	108	109	110	111	112
FEB. 78	636	0	93	92	89	74	85	89	88	76	86	88	87

TOTAL SYSTEM AVAILABILITY = 92 PERCENT
MEGAWATT-HOURS GENERATED = 366,200

MODULE 101 WAS DOWN IN FEBRUARY FOR MODIFICATIONS TO THE SPRAY TOWER ABSORBER. A BULK ENTRAINMENT SEPARATOR WAS INSTALLED ALONG WITH A KOCH WASH TRAY. SPRAY NOZZLES WERE REPLACED. THE 2 IN. DIA. SS RODS IN THE PRIMARY CONTACTOR WERE REPLACED WITH 6(5/8)IN. DIA. CERAMIC COATED C.S. RODS. THE CERAMIC SLEEVES ARE 9/16IN. THICK. MODULES WHICH ARE SHOWING AVAILABILITY OF LESS THAN 80 PERCENT, ARE THOSE IN WHICH THE STRAINER MODIFICATIONS WERE PERFORMED.

MAR. 78	676	71	83	64	89	90	83	62	89	97	71	79	90

TOTAL SYSTEM AVAILABILITY = 92 PERCENT
MEGAWATT-HOURS GENERATED = 423,220

STRAINER MODIFICATIONS CONTINUED THROUGH MARCH AFFECTING THE AVAILABILITIES OF MODULES 101, 103, 107 AND 110.

APR. 78	713	92	87	87	44	81	85	91	86	92	91	87	52

TOTAL SYSTEM AVAILABILITY = 95 PERCENT
MEGAWATT-HOURS GENERATED = 464,520

THE REASON FOR LOW AVAILABILITY ON MODULE 104 AND 112 IN APRIL RESULTED FORM THE OUTAGE TIME NECESSARY FOR THE INSTALLATION OF STEEL STRAINER SCREENS.

MAY 78	635	61	86	85	86	89	64	62	83	82	71	87	79

TOTAL SYSTEM AVAILABILITY = 95 PERCENT
MEGAWATT-HOURS GENERATED = 380,010

THERE WERE NO MAJOR FGD RELATED OUTAGES DURING MAY.

JUNE 78	717	50	84	85	85	62	78	55	83	88	82	72	95

TOTAL SYSTEM AVAILABILITY = 93 PERCENT
MEGAWATT-HOURS GENERATED = 414,670

EPA UTILITY FGD SURVEY: AUGUST 1978 - SEPTEMBER 1978

NORTHERN STATES POWER SHERBURNE 1

BOILER OPERATION TIME AND MODULE OPERABILITY (%)

PERIOD	BOILER HR.	101	102	103	104	105	106	107	108	109	110	111	112
JULY 78	694	82	76	71	74	75	52	75	65	62	72	66	73

TOTAL SYSTEM AVAILABILITY = 95 PERCENT
MEGAWATT-HOURS GENERATED = 394,510

THE UTILITY IS IN THE PROCESS OF REMOVING THE ORIGINAL ZURN DUPLEX STRAINERS AND REPLACING THEM WITH 316 STAINLESS STEEL STRAINERS. THE OCCURANCE OF PLUGGING PROBLEMS IN THE MIST ELIMINATOR AND REHEATER HAS BEEN MORE FREQUENT THAN NORMAL. THE UTILITY IS EVALUATING NEW RUBBER LINED PUMPS (8000 GPM) AND STAINLESS STEEL MIST ELIMINATOR WASH LANCES (TO REPLACE ORIGINAL FIBERGLAS LANCES). THE FGD SYSTEM HAS BEEN EXPERIENCING PRIMARY CONTACTOR WALL AND MARBLE BED WEAR. THE UTILITY IS PREPARING FOR THE STATE COMPLIANCE DEADLINE ON NOV. 1. CURRENTLY TESTING HAS BEEN PROCEEDING ON DIFFERENT MODULES IN AN EFFORT TO FINE TUNE THE SYSTEM.

AUG. 78	742	64	65	75	63	65	80	81	75	65	75	64	83

TOTAL SYSTEM AVAILABILITY = 91 PERCENT
MEGAWATT-HOURS GENERATED = 416,930

NO MAJOR FGD RELATED OUTAGES WERE REPORTED BY THE UTILITY FOR THE MONTH OF AUGUST.

SEP. 78	357	89	62	77	77	58	82	68	68	80	80	55	75

TOTAL SYSTEM AVAILABILITY = 97 PERCENT
MEGAWATT-HOURS GENERATED = 185,740

THE BOILER WAS TAKEN DOWN ON SEPTEMBER 15 FOR A SCHEDULED ANNUAL BOILER AND TURBINE INSPECTION. THIS IS EXPECTED TO LAST THROUGH OCTOBER 16. THE UTILITY HAS ASKED THAT THE STATE COMPLIANCE DEADLINE BE MOVED UP FROM NOVEMBER 1. THE DECISION IS CURRENTLY PENDING. THE RUBBER LINED PUMPS THAT THE UTILITY WAS INVESTIGATING AS POSSIBLE SOLUTIONS TO THE MIST ELIMINATOR AND REHEATER PLUGGING PROBLEMS HAVE BEEN ORDERED. FOUR OF THE PUMPS HAVE BEEN RECEIVED AND ONE IS INSTALLED. THE OTHERS WILL BE INSTALLED AS THEY COME IN. DIFFERENT MIST ELIMINATOR SPRAY PATTERNS ARE ALSO BEING TESTED.

SECTION 3
PERFORMANCE DESCRIPTION FOR OPERATIONAL FGD SYSTEMS

UTILITY NAME	NORTHERN STATES POWER
UNIT NAME	SHERBURNE 2
UNIT LOCATION	BECKER MINNESOTA
UNIT RATING	710 MW
FUEL CHARACTERISTICS	COAL: 0.8% SULFUR, 9.5% ASH
FGD VENDOR	COMBUSTION ENGINEERING
PROCESS	LIMESTONE/ALKALINE FLYASH
NEW OR RETROFIT	NEW
START UP DATE	4/77

EFFICIENCY:

PARTICULATES	(ACTUAL)	50-55 PERCENT
	(DESIGN)	99.0 PERCENT
SO2	(ACTUAL)	55.0 PERCENT
	(DESIGN)	50.0 PERCENT

WATER MAKE UP	OPEN LOOP 1.13 GPM/MW
SLUDGE DISPOSAL	FORCIBLY OXIDIZED/SLUDGE POND

OPERATING EXPERIENCE UPDATE:

BOILER OPERATION TIME AND MODULE OPERABILITY (%)

PERIOD	BOILER HR.	201	202	203	204	205	206	207	208	209	210	211	212
FEB. 78	620	83	85	55	91	89	76	71	89	85	81	97	60

TOTAL SYSTEM AVAILABILITY = 92 PERCENT
MEGAWATT-HOURS GENERATED = 367,080
MODULES 203 AND 212 HAVE LOW AVAILABILITY DUE TO STRAINER MODIFICATIONS.

MAR. 78	744	82	92	90	83	78	85	91	62	83	78	88	89

TOTAL SYSTEM AVAILABILITY = 97 PERCENT
MEGAWATT-HOURS GENERATED = 483,750
IN SPITE OF STRAINER MODIFICATIONS ON MODULES 208 AND 210, THE SYSTEM GENERATED MAXIMUM MEGAWATT-HOURS AND TIED THE HIGHEST RECORDED AVAILABILITY OF 97 PERCENT.

APR. 78	719	70	82	90	84	91	83	84	86	78	90	67	85

TOTAL SYSTEM AVAILABILITY = 92 PERCENT
MEGAWATT-HOURS GENERATED = 436,420
DURING APRIL MODULE 201 WAS CONVERTED FOR USE WITH THE NEW SPRAY TOWER WHICH WAS INSTALLED.

MAY 78	120	97	94	80	90	90	89	90	92	28	91	78	14

TOTAL SYSTEM AVAILABILITY = 91 PERCENT
MEGAWATT-HOURS GENERATED = 70,070
THERE WERE LINER FAILURES (CEILCOTE) IN MOST OF THE MODULES DURING MAY. THE LINERS WERE REPAIRED BY THE CEILCOTE COMPANY AT THEIR OWN EXPENSE. THE INLET SEAL STRIPS WERE ALSO REPAIRED. THE UNIT WENT DOWN ON MAY 6 FOR THE FIRST YEAR BOILER AND TURBINE INSPECTION AND WAS DOWN FOR THE REMAINDER OF THE PERIOD.

JUNE 78	572	77	46	41	67	62	62	72	78	60	62	76	75

TOTAL SYSTEM AVAILABILITY = 95 PERCENT
MEGAWATT-HOURS GENERATED = 326,780

FPA UTILITY FGD SURVEY: AUGUST 1978 - SEPTEMBER 1978

NORTHERN STATES POWER SHERBURNE 2

BOILER OPERATION TIME AND MODULE OPERABILITY (%)

PERIOD	BOILER HR.	201	202	203	204	205	206	207	208	209	210	211	212
JULY 78	697	87	89	62	93	90	64	86	67	64	81	73	71

TOTAL SYSTEM AVAILABILITY = 95 PERCENT
MEGAWATT-HOURS GENERATED = 393,610

THE UTILITY IS IN THE PROCESS OF REMOVING THE ORIGINAL ZURN DUPLEX STRAINERS AND REPLACING THEM WITH 316 STAINLESS STEEL STRAINERS. THE OCCURANCE OF PLUGGING PROBLEMS IN THE MIST ELIMINATOR AND REHEATER HAS BEEN MORE FREQUENT THAN NORMAL. THE UTILITY IS EVALUATING NEW RUBBER LINED PUMPS (8000 GPM) AND STAINLESS STEEL MIST ELIMINATOR WASH LANCES (TO REPLACE ORIGINAL FIBERGLAS LANCES). THE FGD SYSTEM HAS BEEN EXPERIENCING PRIMARY CONTACTOR WALL AND MARBLE BED WEAR. THE UTILITY IS PREPARING FOR THE STATE COMPLIANCE DEADLINE ON NOV. 1. CURRENTLY, TESTING HAS BEEN PROCEEDING ON DIFFERENT MODULES IN AN EFFORT TO FINE TUNE THE SYSTEM.

AUG. 78	695	88	100	48	79	81	72	64	87	54	76	80	71

TOTAL SYSTEM AVAILABILITY = 93 PERCENT
MEGAWATT-HOURS GENERATED = 384,400

SEP. 78	720	72	82	70	61	74	64	82	72	75	78	82	68

TOTAL SYSTEM AVAILABILITY = 96 PERCENT
MEGAWATT-HOURS GENERATED = 396,500

NO FGD RELATED OUTAGES WERE REPORTED BY THE UTILITY FOR THE AUGUST-SEPTEMBER REPORT PERIOD. THE UTILITY HAS ASKED THAT THE STATE COMPLIANCE TEST BE MOVED UP FROM NOVEMBER 1. A DECISION IS STILL PENDING. THE RUBBER LINED PUMPS THAT THE UTILITY WAS INVESTIGATING AS POSSIBLE SOLUTIONS TO THE MIST ELIMINATOR AND REHEATER PLUGGING PROBLEMS HAVE BEEN ORDERED. FOUR OF THE PUMPS HAVE BEEN RECEIVED AND ONE IS INSTALLED. THE OTHERS WILL BE INSTALLED AS THEY ARE RECEIVED. DIFFERENT MIST ELIMINATOR SPRAY PATTERNS ARE ALSO BEING TESTED.

SECTION 3
PERFORMANCE DESCRIPTION FOR OPERATIONAL FGD SYSTEMS

UTILITY NAME PENNSYLVANIA POWER

UNIT NAME BRUCE MANSFIELD 1

UNIT LOCATION SHIPPINGPORT PENNSYLVANIA

UNIT RATING 825 MW

FUEL CHARACTERISTICS COAL: 4.7% SULFUR, 12.5% ASH

FGD VENDOR CHEMICO

PROCESS LIME

NEW OR RETROFIT NEW

START UP DATE 4/76

EFFICIENCY:
PARTICULATES (ACTUAL) 99.9 PERCENT
(DESIGN) 99.8 PERCENT
SO2 (ACTUAL) 95.0 PERCENT
(DESIGN) 92.1 PERCENT

WATER MAKE UP OPEN LOOP

SLUDGE DISPOSAL STABILIZED/LANDFILL

OPERATING EXPERIENCE UPDATE:

MONTH	BOILER	OPERATING HOURS FGD MODULES A	B	C	D	E	F
NOV. 77	720	682	713	657	0	0	0
FGD AVAILABILITY FACTOR %		95	99	91	0	0	0
FGD OPERABILITY FACTOR %		95	99	91	0	0	0
FGD UTILIZATION FACTOR %		95	99	91	0	0	0

TOTAL FGD LOST GENERATION FACTOR = 52.5%
REMOVAL OF THE OLD COATING AND PRIMING OF THE FLUE LINING IN FLUE 1B IS PROCEEDING SLOWER THAN ANTICIPATED. IT IS EXPECTED THAT TOTAL WORK ON THE FLUE WILL NOT BE COMPLETED UNTIL FEBRUARY OR MARCH 1978.

DEC. 77	626*	677	592	675	0	0	0
FGD AVAILABILITY FACTOR %		100	93	99	0	0	0
FGD OPERABILITY FACTOR %		100	94	100	0	0	0
FGD UTILIZATION FACTOR %		91	79	91	0	0	0

TOTAL FGD LOST GENERATION FACTOR = 61 %
SANDBLASTING OF UNIT 1-B FLUE IS NEARING COMPLETION. THE FLUE WILL BE RELINED WITH CXL-2000.

JAN. 78	331*	433	0	432	0	0	0
FGD AVAILABILITY FACTOR %		100	0	100	0	0	0
FGD OPERABILITY FACTOR %		100	0	100	0	0	0
FGD UTILIZATION FACTOR		58	0	58	0	0	0

TOTAL FGD LOST GENERATION FACTOR = 60%
THERE WERE PROBLEMS WITH 1B FAN WHICH NECCESITATED EXTENSIVE REPAIRS. LINING ABRASION AND DISBONDMENT IN FAN CAUSED CORROSION OF UNDERLYING SUPPORT METAL. THE UNIT TRIPPED SEVERAL TIMES DUE TO DIFFICULTIES IN BURNING WET STOCKPILE COAL.

FEB. 78	514*	534	410	551	0	0	0
FGD AVAILABILITY FACTOR %		79	61	82	0	0	0
FGD OPERABILITY FACTOR %		100	80	100	0	0	0
FGD UTILIZATION FACTOR %		79	61	82	0	0	0

TOTAL FGD LOST GENERATION FACTOR = 54%
EXTENSIVE REPAIRS TO 1B I.D. FAN AND THE EMERGENCY NEED FOR LOAD FROM THE PLANT DURING THE COAL STRIKE TEMPORARILY OVERLOADED 1A AND 1C TRAINS. THE MIST ELIMINATOR WILL BE REPLACED ON 1C TRAIN AS A RESULT OF THIS. 1B FLUE RELINING CONTINUES.

EPA UTILITY FGD SURVEY: AUGUST 1978 - SEPTEMBER 1978

PENNSYLVANIA POWER — BRUCE MANSFIELD 1

MONTH	BOILER	OPERATING HOURS FGD MODULES A	B	C	D	E	F
MAR. 78	689	324	678	670	485	376	449
FGD AVAILABILITY FACTOR %		43	91	90	65	50	60
FGD OPERABILITY FACTOR %		47	98	97	70	54	65
FGD UTILIZATION FACTOR %		43	91	90	65	50	60

TOTAL FGD LOST GENERATION FACTOR = 54%

REPLACEMENT OF THE LINING IN 1B CHIMNEY WITH CXL 2000 WAS COMPLETED. REPAIRS WERE DONE ON A, B, AND C FAN HOUSINGS.

APR. 78	720	530	632	357	630	697	678
FGD AVAILABILITY FACTOR %		74	88	49	87	97	94
FGD OPERABILITY FACTOR %		74	88	49	87	97	94
FGD UTILIZATION FACTOR %		74	88	49	87	97	94

TOTAL FGD LOST GENERATION FACTOR = 18%

MISCELLANEOUS LEAK REPAIRS WERE DONE ON FAN HOUSINGS AND DUCTS.

MAY 78	457	442	0	443	389	394	395
FGD AVAILABILITY FACTOR %		98	0	98	91	92	92
FGD OPERABILITY FACTOR %		97	0	97	85	84	86
FGD UTILIZATION FACTOR %		59	0	59	52	52	53

TOTAL FGD LOST GENERATION FACTOR = 21%

EXTENSIVE REPAIRS WERE MADE ON THE 1B FAN. ANNUAL BOILER INSPECTION OUTAGE BEGAN ON MAY 20.

JUNE 78	0	0	0	0	0	0	0
FGD AVAILABILITY FACTOR %		0	0	100	100	100	100
FGD OPERABILITY FACTOR %		0	0	0	0	0	0
FGD UTILIZATION FACTOR %		0	0	0	0	0	0

TOTAL FGD LOST GENERATION FACTOR = 0%

UNIT OUTAGE TIME WAS FOR BOILER INSPECTION AND GENERATOR STATOR COOLER REPAIRS.

*NOTE: AN ATTEMPT IS ALWAYS MADE TO BEGIN OPERATION OF THE BOILER AND FGD SYSTEM SIMULTANEOUSLY AT BRUCE MANSFIELD. OCCASIONALLY PROBLEMS DELAY BOILER START-UP MAKING IT POSSIBLE FOR MONTHLY FGD MODULE HOURS TO EXCEED ACTUAL BOILER HOURS.

SECTION 3
PERFORMANCE DESCRIPTION FOR OPERATIONAL FGD SYSTEMS

UTILITY NAME	PENNSYLVANIA POWER
UNIT NAME	BRUCE MANSFIELD 2
UNIT LOCATION	SHIPPINGPORT PENNSYLVANIA
UNIT RATING	825 MW
FUEL CHARACTERISTICS	COAL: 4.7% SULFUR, 12.5% ASH
FGD VENDOR	CHEMICO
PROCESS	LIME
NEW OR RETROFIT	NEW
START UP DATE	7/77

EFFICIENCY:

PARTICULATES	(ACTUAL)	99.9 PERCENT
	(DESIGN)	99.8 PERCENT
SO2	(ACTUAL)	95.0 PERCENT
	(DESIGN)	92.1 PERCENT

WATER MAKE UP	OPEN LOOP
SLUDGE DISPOSAL	STABILIZED/LANDFILL

OPERATING EXPERIENCE UPDATE:

MONTH	BOILER	OPERATING HOURS FGD MODULES A	B	C	D	E	F
NOV. 77	581*	598	584	533	331	304	246
FGD AVAILABILITY FACTOR %		100	96	88	47	55	47
FGD OPERABILITY FACTOR %		100	100	92	57	52	42
FGD UTILIZATION FACTOR %		63	81	74	46	42	34

TOTAL FGD LOST GENERATION FACTOR = 27%
PROBLEMS ASSOCIATED WITH THE STATION POWER TRANSFORMERS CAUSED LIMITATION IN LOAD ON UNIT 2. THREE OF THE SIX STATION TRANSFORMERS FOR UNIT 2 WERE DESTROYED.

DEC. 77	607*	469	638	618	644	513	565
FGD AVAILABILITY FACTOR %		74	99	98	100	89	99
FGD OPERABILITY FACTOR %		77	100	100	100	85	93
FGD UTILIZATION FACTOR %		63	86	83	86	69	76

TOTAL FGD LOST GENERATION FACTOR = 7.4%
COLD WEATHER CREATED SOME FREEZING PROBLEMS WITH PROCESS PIPING.

JAN. 78	391*	228	564	218	521	481	375
FGD AVAILABILITY FACTOR %		95	100	96	94	99	99
FGD OPERABILITY FACTOR %		58	100	56	100	100	96
FGD UTILIZATION FACTOR %		31	76	29	70	64	50

TOTAL FGD LOST GENERATION FACTOR = 4.3%
UNIT TRIPPED SEVERAL TIMES DUE TO DIFFICULTIES IN BURNING WET STOCKPILE COAL. BOILER CONTROL VALVE PROBLEMS ("W" VALVE) COMPOUNDED START-UP ATTEMPT DIFFICULTIES. WHEN THE UNIT WAS ON LINE DURING THIS MONTH, THE WET COAL ALSO PREVENTED FULL LOAD OPERATION OF COAL MILLS.

FEB. 78	672	321	460	594	480	664	525
FGD AVAILABILITY FACTOR %		84	87	89	97	99	78
FGD OPERABILITY FACTOR %		46	68	88	71	99	78
FGD UTILIZATION FACTOR %		48	68	88	71	99	78

TOTAL FGD LOST GENERATION FACTOR = 18.6 %
MANY PROBLEMS OCCURRED WITH I.D. FAN COOLERS DUE TO INCLEMENT WEATHER.

EPA UTILITY FGD SURVEY: AUGUST 1978 - SEPTEMBER 1978

PENNSYLVANIA POWER — BRUCE MANSFIELD 2

MONTH	BOILER	OPERATING HOURS FGD MODULES A	B	C	D	E	F
MAR. 78	494*	502	449	96	509	474	487
FGD AVAILABILITY FACTOR %		100	93	13	95	95	97
FGD OPERABILITY FACTOR %		100	91	10	100	96	99
FGD UTILIZATION FACTOR %		67	60	13	68	64	65

TOTAL FGD LOST GENERATION FACTOR = 28%

A BOILER TUBE LEAK CAUSED AN OUTAGE FOR SEVERAL DAYS. EXTENSIVE I.D. FAN HOUSING REPAIRS WERE PERFORMED ON THE 2C FAN.

APR. 78	713	583	583	424	108	101	96
FGD AVAILABILITY FACTOR %		100	100	59	15	14	13
FGD OPERABILITY FACTOR %		82	82	59	15	14	13
FGD UTILIZATION FACTOR %		81	81	59	15	14	13

TOTAL FGD LOST GENERATION FACTOR = 38%

2B CHIMNEY FLUE LINING REPAIRS BEGAN ON APRIL 5. EXTENSIVE REPAIRS WERE DONE ON THE 2C I.D. FAN. THE FAN WAS DOWN FROM MARCH 6 THROUGH APRIL 13.

MAY 78	270*	276	276	276	0	0	0
FGD AVAILABILITY FACTOR %		100	100	100	0	0	0
FGD OPERABILITY FACTOR %		100	100	100	0	0	0
FGD UTILIZATION FACTOR %		37	37	37	0	0	0

TOTAL FGD LOST GENERATION FACTOR = 81%

2B STACK FLUE LINING REPAIRS CONTINUED. THE UNIT WAS OFF-LINE FOR 3 WEEKS FOR REPAIRS TO THE 2C I.D. FAN. THE FAN HOUSING WAS CLAD WITH INCOLOY 825.

JUNE 78	417*	502	501	478	0	0	0
FGD AVAILABILITY FACTOR %		70	69	66	0	0	0
FGD OPERABILITY FACTOR %		100	100	100	0	0	0
FGD UTILIZATION FACTOR %		70	69	66	0	0	0

TOTAL FGD LOST GENERATION FACTOR = 66%

2B FLUE LINING REPAIRS CONTINUED.

*NOTE: AN ATTEMPT IS ALWAYS MADE TO BEGIN OPERATION OF THE BOILER AND FGD SYSTEM SIMULTANEOUSLY AT BRUCE MANSFIELD. OCCASIONALLY PROBLEMS DELAY BOILER START-UP MAKING IT POSSIBLE FOR MONTHLY FGD MODULE HOURS TO EXCEED ACTUAL BOILER HOURS.

SECTION 5
PERFORMANCE DESCRIPTION FOR OPERATIONAL FGD SYSTEMS

UTILITY NAME	PHILADELPHIA ELECTRIC
UNIT NAME	EDDYSTONE 1A
UNIT LOCATION	EDDYSTONE PENNSYLVANIA
UNIT RATING	120 MW
FUEL CHARACTERISTICS	COAL; 2.5% SULFUR, 10% ASH
FGD VENDOR	UNITED ENGINEERS
PROCESS	MAGNESIUM OXIDE
NEW OR RETROFIT	RETROFIT
START UP DATE	9/75
EFFICIENCY:	
PARTICULATES (ACTUAL)	99.9 PERCENT
(DESIGN)	99.9 PERCENT
SO2 (ACTUAL)	95-97 PERCENT
(DESIGN)	90.0 PERCENT
WATER MAKE UP	OPEN LOOP 1.1 GPM/MW
SLUDGE DISPOSAL	ACID PLANT REGENERATION

OPERATING EXPERIENCE UPDATE:

FEB. 78
MAR. 78 THE TURBINE OVERHAUL CONTINUED DURING THE REPORT PERIOD. DURING THE SHUTDOWN PERIOD IT WAS FOUND THAT SOME HIGH PRESSURE STEAM TUBES WERE CRACKED, SO UNIT MAINTENANCE HAS TAKEN LONGER THAN EXPECTED. SOME MINOR FGD SYSTEM MODIFICATIONS HAVE BEEN INCORPORATED IN THE COURSE OF THE SHUTDOWN PERIOD. START UP IS EXPECTED IN MID-APRIL 78.

APR. 78
MAY 78 THE UNIT JUST CAME BACK ON LINE JUNE 1 AFTER AN EXTENSIVE SYSTEM MODIFICATION OUTAGE WHICH BEGAN DECEMBER 22. THE UNIT WAS EXPECTED BACK ON LINE IN MID-APRIL, BUT THERE WAS A PROBLEM WITH A SUPER PRESSURE STEAM TURBINE.

JUNE 78
JULY 78 DURING JUNE THE SCRUBBER-ABSORBER SYSTEM ACHIEVED A 49% OPERABILITY. OPERABILITY FOR JULY WAS 51%. PROBLEMS OCCURRED THE LAST WEEK OF JUNE WITH THE MGSO3 SLURRY CIRCULATION PUMP WHEN THE UTILITY DISCOVERED THE RUBBER LINER WAS TORN AWAY. THERE HAVE BEEN SOME PROBLEMS WITH THE MGO SECTION WHERE THE MGO MIXES WITH THE SYSTEM LIQUOR. FIRE BRICK WAS REMOVED FROM THE FLUID BED REACTOR CHAMBER TO REPLACE THE ACID BARRIOR PLATES WHICH WERE FAILING. THE FIRE BRICK WAS THEN REPLACED. THE SLOW PIECE BY PIECE PROCEDURE WAS TIME CONSUMING AND ACCOUNTED FOR MOST OF THE REGENERABLE FACILITY DOWN TIME (MOST OF JUNE AND JULY). MAJOR PROBLEMS WERE SOLVED ON THE REGENERATIVE FACILITY OVER THE PERIOD RESULTING IN IMPROVED AVAILABILITY OF THE FACILITY.

MONTH	PERIOD HOURS	BOILER HOURS	FGD SYSTEM PARAMETERS HOURS	OPERABILITY	UTILIZATION
AUG. 78	744	631	240	38%	32%

DURING THE MONTH OF AUGUST SCRUBBER CIRCULATING PIPING PROBLEMS WERE ENCOUNTERED. A BUTTERFLY CONTROL VALVE WAS NOT FULLY OPEN AND A SECTION OF PIPE DOWNSTREAM AT A 90 DEGREE BEND ERODED AWAY. TO CORRECT THE PROBLEM THE BUTTERFLY VALVE WAS TAKEN OUT AND REPLACED WITH A RESTRICTION ORIFICE. THE CIRCULATION PUMPING RATE WAS ALSO REDUCED.

SEP. 78	720	516	402	78%	56%

THE UTILITY REPORTED THAT NO MAJOR PROBLEMS WERE ENCOUNTERED DURING THE MONTH OF SEPTEMBER. CERTAIN MECHANICAL PROBLEMS WERE RESOLVED WHICH CAUSED AN IMPROVEMENT IN THE OPERABILITY FIGURE.

SECTION 3
PERFORMANCE DESCRIPTION FOR OPERATIONAL FGD SYSTEMS

UTILITY NAME	PUBLIC SERVICE OF NEW MEXICO
UNIT NAME	SAN JUAN 1
UNIT LOCATION	WATERFLOW NEW MEXICO
UNIT RATING	514 MW
FUEL CHARACTERISTICS	COAL: 0.8% SULFUR, 20% ASH
FGD VENDOR	DAVY POWERGAS
PROCESS	WELLMAN LORD
NEW OR RETROFIT	NEW
START UP DATE	4/78
EFFICIENCY:	
PARTICULATES (ACTUAL)	
(DESIGN)	99.8 PERCENT
SO2 (ACTUAL)	
(DESIGN)	85.0 PERCENT
WATER MAKE UP	CLOSED LOOP 1.53 GPM/MW
SLUDGE DISPOSAL	ELEMENTAL SULFUR PRODUCT

OPERATING EXPERIENCE UPDATE:

FEBRUARY-MARCH 1978 - INITIAL SO2 ABSORPTION AT SAN JUAN NO. 1 BEGAN ON APRIL 8, 1978. FULL COMMERCIAL OPERATION IS EXPECTED BY LATE JUNE. THE FGD SYSTEM IS CURRENTLY IN SERVICE WITH TWO OF THE UNIT'S FOUR ABSORBER CELLS OPERATING CONTINUOUSLY. A THIRD CELL IS TO BE BROUGHT ON LINE LATER. THREE CELLS WILL BE REQUIRED FOR FULL LOAD WITH A FOURTH INCLUDED FOR SPARE FGD CAPACITY. THE CURRENT MODE IS TO KEEP 2 CELLS IN SERVICE AT ALL TIMES AND 2 OUT OF SERVICE. 2/3 OF THE FLUE GAS IS BEING TREATED WHILE 1/3 IS BEING BYPASSED. THE UNIT IS IN COMPLIANCE AT PRESENT WITH RESPECT TO SO2 WITH ONLY 2 CELLS RUNNING BECAUSE THE BISULFITE CONCENTRATION HAS NOT YET BUILT UP IN THE ABSORBENT LIQUOR. WHEN THE SYSTEM REACHES EQUILIBRIUM WITH RESPECT TO BISULFITE (18% BISULFITE) THE UNIT WILL BE READY TO BEGIN REGENERATING OPERATIONS. REGENERATION IS EXPECTED TO BEGIN BY APRIL 27.

APRIL-MAY 1978 - OVER THE PERIOD THE UTILITY ACCUMULATED 22 DAYS OF DATA DURING WHICH THE BOILER WAS DOWN FOR 7 HOURS AND THE ABSORBERS WERE DOWN FOR 28 HOURS (UNSCHEDULED). THE UNIT IS STILL NOT STABILIZED SO USEFUL FIGURES FOR WATER REQUIREMENTS ARE UNAVAILABLE. THE CHEMICAL PLANT REMAINS IN ITS START UP STAGE.

JUNE-JULY 1978 - THE UNIT EXPERIENCED A VERY HIGH PRESSURE DROP ACROSS THE VENTURIS DURING THIS PERIOD. AS A RESULT, THE FANS WERE NOT ABLE TO MOVE 100% OF THE FLUE GAS THROUGH THE FGD SYSTEM.

AUGUST-SEPTEMBER 1978 - DURING THIS PERIOD THE HIGH PRESSURE DROP PROBLEM WAS CORRECTED BY MODIFYING ADJUSTABLE PLUMB BOBS WITHIN THE MODULES TO BE FARTHER AWAY FROM THE VENTURIS. THIS IMPROVED THE GAS FLOW AND REDUCED THE PRESSURE DROP. THE UTILITY ANTICIPATES THAT THEY WILL NOW BE ABLE TO SCRUB 100% OF THE FLUE GAS. IN ORDER TO PERFORM THESE MODIFICATIONS AT LEAST TWO MODULES WERE DOWN AT ALL TIMES THROUGHOUT THE PERIOD. MIST ELIMINATOR REPAIRS WERE ALSO MADE WHILE THE MODULES WERE DOWN. THERE WAS A TWO WEEK BOILER OUTAGE IN SEPTEMBER CAUSED BY A FIRE IN THE START-UP TRANSFORMER DUCT BANK. HOURS OF OPERATION FOR THIS NEWLY OPERATIONAL UNIT ARE NOT YET AVAILABLE.

SECTION 3
PERFORMANCE DESCRIPTION FOR OPERATIONAL FGD SYSTEMS

UTILITY NAME	PUBLIC SERVICE OF NEW MEXICO
UNIT NAME	SAN JUAN 2
UNIT LOCATION	WATERFLOW NEW MEXICO
UNIT RATING	506 MW
FUEL CHARACTERISTICS	COAL: 0.8% SULFUR, 20% ASH
FGD VENDOR	DAVY POWERGAS
PROCESS	WELLMAN LORD
NEW OR RETROFIT	RETROFIT
START UP DATE	7/78
EFFICIENCY:	
PARTICULATES (ACTUAL)	
(DESIGN)	99.5 PERCENT
SO2 (ACTUAL)	
(DESIGN)	85.0 PERCENT
WATER MAKE UP	CLOSED LOOP
SLUDGE DISPOSAL	ELEMENTAL SULFUR PRODUCT

OPERATING EXPERIENCE UPDATE:

AUGUST-SEPTEMBER 1978 - INITIAL OPERATIONS BEGAN AT THIS UNIT LATE IN AUGUST. ALL THREE MODULES RAN TOGETHER AT FULL CAPACITY FOR THE FIRST TIME IN SEPTEMBER. A TWO WEEK BOILER OUTAGE OCCURRED IN SEPTEMBER AS A RESULT OF A FIRE IN THE START-UP TRANSFORMER DUCT BANK. PROBLEMS WERE ALSO ENCOUNTERED WITH THE BOOSTER BOILER CONTROL DAMPER. DUE TO THE RECENT OPERATING STATUS OF THIS SYSTEM HOURS OF OPERATION ARE NOT YET AVAILABLE.

SECTION 5
PERFORMANCE DESCRIPTION FOR OPERATIONAL FGD SYSTEMS

UTILITY NAME	SOUTH CAROLINA PUBLIC SERVICE
UNIT NAME	WINYAH 2
UNIT LOCATION	GEORGETOWN SOUTH CAROLINA
UNIT RATING	280 MW
FUEL CHARACTERISTICS	COAL; 1.0% SULFUR, 19% ASH
FGD VENDOR	BABCOCK & WILCOX
PROCESS	LIMESTONE
NEW OR RETROFIT	NEW
START UP DATE	7/77

EFFICIENCY:

PARTICULATES	(ACTUAL)	99.4 PERCENT
	(DESIGN)	99.4 PERCENT
SO2	(ACTUAL)	85.6 PERCENT
	(DESIGN)	69.0 PERCENT

WATER MAKE UP	OPEN LOOP
SLUDGE DISPOSAL	UNSTABILIZED/SLUDGE POND

OPERATING EXPERIENCE UPDATE:

FEB. 78 MAR. 78 DURING THE FEB-MAR PERIOD THE FGD SYSTEM WAS BYPASSED ONCE FOR SEVERAL DAYS TO ALLOW SYSTEM CLEANING. THIS WAS IN PREPARATION FOR TESTS THAT BABCOCK AND WILCOX WILL SOON BE PERFORMING, AND FOR WHICH THEY HAVE SET UP TEMPORARY ON-SITE LABORATORY FACILITIES. OTHERWISE, THE SYSTEM RAN WELL DURING THE PERIOD WITH ONLY A FEW MINOR PLUGGING AND SPILLAGE PROBLEMS IN VARIOUS SLURRY LINES.

APR. 78 MAY 78 THE SYSTEM WAS OPERATIONAL FOR MOST OF THIS PERIOD. THE ONLY PROBLEM ENCOUNTERED WAS MINOR SCALING, BUT IT DID NOT CAUSE AN OUTAGE. THE UTILITY DID NOT HAVE ANY PERFORMANCE FACTORS TO REPORT FOR THIS PERIOD.

JUNE 78 JULY 78 THERE WERE NO FGD RELATED OUTAGES DURING THE PERIOD. THE BOILER AND FGD SYSTEM RAN FOR 679 AND 722 HOURS FOR JUNE AND JULY, RESPECTIVELY. THERE WERE THREE BOILER OUTAGES DURING THE PERIOD, ONE OF WHICH WAS A SCHEDULED OUTAGE.

AUG. 78 SEP. 78 NO FGD-RELATED OUTAGES WERE REPORTED. BOILER AND FGD HOURS WERE NOT AVAILABLE FOR THIS PERIOD. DURING SEPTEMBER A CERTIFICATION TEST WAS RUN ON THE SO2 ANALYZERS. THE ANALYZERS PERFORMED WELL.

SECTION 3
PERFORMANCE DESCRIPTION FOR OPERATIONAL FGD SYSTEMS

UTILITY NAME	SOUTHERN MISSISSIPPI ELECTRIC
UNIT NAME	R. D. MORROW 1
UNIT LOCATION	HATTIESBURG MISSISSIPPI
UNIT RATING	180 MW
FUEL CHARACTERISTICS	COAL; 1% SULFUR, 8% ASH
FGD VENDOR	RILEY STOKER / ENVIRONFERING
PROCESS	LIMESTONE
NEW OR RETROFIT	NEW
START UP DATE	8/78
EFFICIENCY:	
PARTICULATES (ACTUAL)	
(DESIGN)	99.8 PERCENT
SO2 (ACTUAL)	
(DESIGN)	85 PERCENT GUARANTEE
WATER MAKE UP	
SLUDGE DISPOSAL	STABILIZED/LANDFILL

OPERATING EXPERIENCE UPDATE:

AUGUST-SEPTEMBER 1978 - INITIAL OPERATIONS AT THIS UNIT BEGAN IN AUGUST 1978. A FORCED BOILER OUTAGE OCCURRED DURING THE PERIOD AS A RESULT OF BOILER TUBE LEAKS. THE UNIT IS EXPECTED BACK ON LINE BY THE FIRST OF NOVEMBER. DUE TO THE RECENT OPERATING STATUS OF THIS SYSTEM HOURS OF OPERATION ARE NOT YET AVAILABLE.

SECTION 3
PERFORMANCE DESCRIPTION FOR OPERATIONAL FGD SYSTEMS

UTILITY NAME	SPRINGFIELD CITY UTILITIES
UNIT NAME	SOUTHWEST 1
UNIT LOCATION	SPRINGFIELD MISSOURI
UNIT RATING	200 MW
FUEL CHARACTERISTICS	COAL: 3.5% SULFUR, 13% ASH
FGD VENDOR	AIR CORRECTION DIVISION, UOP
PROCESS	LIMESTONE
NEW OR RETROFIT	NEW
START UP DATE	4/77

EFFICIENCY:

PARTICULATES	(ACTUAL)	99.8 PERCENT
	(DESIGN)	99.7 PERCENT
SO2	(ACTUAL)	92.0 PERCENT
	(DESIGN)	80.0 PERCENT

WATER MAKE UP

SLUDGE DISPOSAL UNSTABILIZED/LANDFILL

OPERATING EXPERIENCE UPDATE:

FEB. 78
MAR. 78

THE ABSORBERS DID NOT OPERATE DUE TO AN EXPANSION JOINT FAILURE BETWEEN THE ID FAN AND THE ABSORBERS. CURRENTLY, THE ABSORBERS ARE BEING BY-PASSED. THE FGD SYSTEM IS EXPECTED TO BE BACK ON LINE BY THE END OF APRIL.

APR. 78
MAY 78

THE UNIT EXPERIENCED AN FRP LINER FAILURE AS WELL AS A PUMP FAILURE DURING THE PERIOD. CURRENTLY ONLY ONE SCRUBBER-ABSORBER MODULE IS RUNNING. THE EXPANSION JOINT FAILURE MENTIONED PREVIOUSLY WAS DIRECTLY RELATED TO THE DAMPER FAILURE WHICH ALLOWED THE BOILER TO CONTINUE PUMPING GAS TO THE SEALED OFF FGD SYSTEM.

JUNE 78

THE A-MODULE RAN STEADILY FOR OVER 11 DAYS. B-MODULE WAS STILL DOWN WITH EXPANSION JOINT PROBLEMS. DURING THE MONTH THE MIST ELIMINATOR WASH SYSTEM WAS ALTERED FROM A SEPARATE CLOSED LOOP FOR EACH MODULE TO A COMMON SYSTEM FOR BOTH MODULES. THE NEW SYSTEM TAKES SUPERNATANT FROM THE TOP OF THE THICKENER FOR MIST ELIMINATOR SPRAY. INSTRUMENTATION PROBLEMS WERE ENCOUNTERED DURING THE MONTH. PH PROBES WERE LOST, THE MAG-FLOW METER FOR LIMESTONE SLURRY FAILED, AND THE AUTOMATIC GAS ANALYZERS DID NOT OPERATE PROPERLY. SOME PIPES PLUGGED DUE TO NEOPRENE PEELING FROM VALVES. THE SLUDGE SYSTEM EXPERIENCED SOME FILTER BELT PROBLEMS BUT THESE WERE REPAIRED.

SPRINGFIELD CITY UTILITIES SOUTHWEST 1

MONTH	BOILER	OPERATING HOURS A-SIDE	B-SIDE	TOTAL	FORCED OUTAGE TIME A-SIDE	B-SIDE	TOTAL	MEGAWATT-HOUR PRODUCTION
JULY 78	744	124	0	124	620	744	1364	101,188

AVAILABILITY = 8%
OPERABILITY = 8%
RELIABILITY = 8%
UTILIZATION = 8%

DURING THE MONTH PROBLEMS WERE ENCOUNTERED WITH THE MODULE A TRANSFER PUMPS. NINE DAYS WERE REQUIRED TO TRACE THE ELECTRICAL PROBLEM. A 17 DAY OUTAGE WAS CAUSED BY PROBLEMS WITH THE BALL MILL AIR SUPPLY WHICH RESULTED IN THE UNAVAILABILITY OF SLURRY. B-MODULE WAS STILL DOWN WHILE THE UTILITY WAITED FOR THE REPLACEMENT EXPANSION JOINT. WORK WAS DONE DURING THE MONTH TO IMPROVE THE INSTRUMENTATION. IT WAS DISCOVERED THAT MANY OF THE PROBLEMS WERE DUE TO SCALE ACCUMULATION ON THE PROBES.

AUG. 78	744	439	0	439	305	744	1049	81,622

AVAILABILITY = 30%
OPERABILITY = 30%
RELIABILITY = 30%
UTILIZATION = 30%

THE B-MODULE REMAINED DOWN THROUGHOUT AUGUST BECAUSE THE REPLACEMENT EXPANSION JOINT HAD NOT YET ARRIVED. EXPANSION JOINT REPAIR WAS REQUIRED ON THE A-MODULE. PROBLEMS WITH THE THICKENER AND PLUGGED LINES CAUSED A-MODULE OUTAGES TOTALING 211 HOURS. THERE WERE NO SCHEDULED OUTAGES.

SEP. 78	557	159	0	159	348	720	1118	68,569

AVAILABILITY = 11%
OPERABILITY = 14%
RELIABILITY = 14%
UTILIZATION = 11%

CONTINUATION OF THE EXPANSION JOINT PROBLEM RESULTED IN THE B-MODULE REMAINING DOWN THROUGHOUT THE MONTH. A-MODULE DOWN TIME WAS DUE TO PLUGGING OF THE THICKENER SLURRY MAKEUP LINES AND FAILURE OF THE BALLS WITHIN THE MODULE. THE PING PONG BALLS WERE REPLACED WITH SOLID RUBBER BALLS.

SECTION 5
PERFORMANCE DESCRIPTION FOR OPERATIONAL FGD SYSTEMS

UTILITY NAME	TENNESSEE VALLEY AUTHORITY
UNIT NAME	SHAWNEE 10A
UNIT LOCATION	PADUCAH KENTUCKY
UNIT RATING	10 MW
FUEL CHARACTERISTICS	COAL: 2.9% SULFUR, 15.8% ASH
FGD VENDOR	AIR CORRECTION DIVISION, UOP
PROCESS	LIME/LIMESTONE
NEW OR RETROFIT	RETROFIT
START UP DATE	4/72
EFFICIENCY:	
PARTICULATES (ACTUAL)	
(DESIGN)	EXPERIMENTALLY CONTROLLED
SO2 (ACTUAL)	
(DESIGN)	EXPERIMENTALLY CONTROLLED
WATER MAKE UP	EXPERIMENTALLY CONTROLLED
SLUDGE DISPOSAL	EXPERIMENTALLY CONTROLLED

OPERATING EXPERIENCE UPDATE:

REFER TO OPERATING EXPERIENCE UPDATE FOR SHAWNEE NO. 10B.

SECTION 3
PERFORMANCE DESCRIPTION FOR OPERATIONAL FGD SYSTEMS

UTILITY NAME	TENNESSEE VALLEY AUTHORITY
UNIT NAME	SHAWNEE 10H
UNIT LOCATION	PADUCAH KENTUCKY
UNIT RATING	10 MW
FUEL CHARACTERISTICS	COAL: 2.9% SULFUR, 15.8% ASH
FGD VENDOR	CHEMICO
PROCESS	LIME/LIMESTONE
NEW OR RETROFIT	RETROFIT
START UP DATE	4/72
EFFICIENCY:	
PARTICULATES (ACTUAL)	
(DESIGN)	EXPERIMENTALLY CONTROLLED
SO2 (ACTUAL)	
(DESIGN)	EXPERIMENTALLY CONTROLLED
WATER MAKE UP	EXPERIMENTALLY CONTROLLED
SLUDGE DISPOSAL	EXPERIMENTALLY CONTROLLED

OPERATING EXPERIENCE UPDATE:

FEB. 78 MAR. 78 MAJOR SYSTEM DOWNTIMES DURING THE PERIOD INCLUDED: JANUARY 26 THROUGH FEBRUARY 4 FOR THE VENTURI/SPRAY TOWER AND JANUARY 26 THROUGH FEBRUARY 2 FOR THE TCA SYSTEM DUE TO FREEZING WEATHER, AND MARCH 6 THROUGH MARCH 17 FOR BOTH SYSTEMS DUE TO BOILER OUTAGE.
THE EFFECT OF THE SLURRY LEVEL IN THE AIR SPARGED OXIDATION TANK WAS INVESTIGATED IN THE TWO SCRUBBER LOOP VENTURI/SPRAY TOWER SYSTEM WHICH IS OPERATING ON LIME SLURRY WITH HIGH FLY ASH LOADING. NEAR COMPLETE SULFITE OXIDATION (98 PERCENT) WAS ACHIEVED WITH 14 FOOT AND 18 FOOT OXIDATION TANK LEVELS AT AN AIR STOICHIOMETRIC RATIO OF 1.8 ATOMS OXYGEN/MOLE SO2 ABSORBED. AN AIR STOICHIOMETRIC RATIO UP TO ABOUT 3.8 WAS NEEDED TO YIELD NEAR COMPLETE OXIDATION WHEN THE TANK LEVEL WAS DROPPED TO 10 FEET.
A NEW TEST BLOCK WAS STARTED ON MARCH 1 ON THE VENTURI/SPRAY TOWER SYSTEM. MAGNESIUM OXIDE WAS ADDED TO THE SPRAY TOWER SLURRY LOOP IN A TWO SCRUBBER LOOP OPERATION WITH FORCED OXIDATION IN THE VENTURI LOOP. THE SYSTEM WAS OPERATED IN A LIMESTONE SLURRY MODE WITH HIGH FLY ASH LOADING. THE PRIMARY OBJECTIVE OF MAGNESIUM ADDITION IS TO IMPROVE THE SO2 REMOVAL EFFICIENCY. BECAUSE OF THE SHORTAGE OF COAL CAUSED BY THE COAL MINERS' STRIKE, COALS FROM DIFFERENT SOURCES WERE BURNED IN THE BOILER. AS A RESULT, INLET SO2 CONCENTRATION FLUCTUATED AS MUCH AS TENFOLD (350-3500 PPM), CAUSING PROBLEMS IN SYSTEM CONTROL.
TCA WAS OPERATED WITH BOTH LIME AND LIMESTONE, AND WITH MAGNESIUM OXIDE ADDITION. FLUE GAS WITH HIGH FLY ASH LOADING WAS USED. THESE TESTS WERE CONDUCTED PRIMARILY TO RESOLVE SOME OF THE INCONSISTENT RESULTS OBTAINED DURING EARLIER LIME/MGO AND LIMESTONE/MGO TESTS MADE IN APRIL-NOVEMBER 1976. AIR LEAKAGE THROUGH THE SCRUBBER DOWNCOMER WAS SUSPECTED IN SOME OF THOSE EARLIER RUNS, RESULTING IN HIGHER-THAN-NORMAL SULFITE OXIDATION AND GYPSUM SATURATION. TEST RESULTS SO FAR WERE INCONCLUSIVE BECAUSE OF THE FLUCTUATION IN INLET SO2 AND CONTROL PROBLEMS MENTIONED ABOVE.

APR. 78 MAY 78 THE VENTURI/SPRAY TOWER SYSTEM CONTINUED TO OPERATE THROUGH EARLY MAY WITH MGO ADDITION AND WITH TWO SCRUBBER LOOPS. THE SYSTEM WAS OPERATED WITH LIMESTONE SLURRY AND WITH HIGH FLY ASH LOADING. MGO WAS ADDED TO THE SPRAY TOWER SLURRY LOOP TO MAINTAIN AN EFFECTIVE MG++ ION CONCENTRATION OF 5000 PPM (ABOUT 8000 PPM IN THE VENTURI SLURRY LOOP) TO IMPROVE THE SO2 REMOVAL EFFICIENCY IN THE SPRAY TOWER. OXIDATION WAS FORCED IN THE VENTURI SLURRY HOLD TANK. UNDER TYPICAL OPERATING CONDITIONS, THE OVERALL SO2 REMOVAL WAS 96 PERCENT AT 2300 PPM INLET SO2 CONCENTRATION, COMPARED TO 86 PERCENT REMOVAL AT 1600 PPM INLET SO2 WITHOUT MGO ADDITION. SO2 REMOVAL BY VENTURI ALONE WAS 30 PERCENT, ABOUT THE SAME AS THE CASE WITHOUT MGO ADDITION. NEAR COMPLETE SULFITE OXIDATION COULD BE ACHIEVED AT AN AIR STOICHIOMETRIC RATIO AS LOW AS 1.3 ATOMS OXYGEN/MOLE SO2 ABSORBED, IN THE SAME ORDER AS THE CASE WITHOUT MGO ADDITION.
FORCED OXIDATION WAS ALSO CONDUCTED ON THE LIMESTONE SLURRY BLEED STREAM FROM THE VENTURI/SPRAY TOWER SYSTEM. A SINGLE EFFLUENT HOLD TANK WAS USED FOR BOTH VENTURI AND SPRAY

TOWER. MGO WAS ADDED TO THE EFFLUENT HOLD TANK TO MAINTAIN AN EFFECTIVE MG++ ION CONCENTRATION OF 5000 PPM. A SLURRY STREAM WAS TAKEN FROM THE SCRUBBER DOWNCOMER AND SENT TO AN OXIDATION TANK INTO WHICH AIR WAS SPARGED. A RECYCLE STREAM OF ABOUT 30 GPM WAS SENT BACK FROM THE OXIDATION TANK TO THE EFFLUENT HOLD TANK TO CONTROL PH IN THE OXIDATION TANK AND TO PROVIDE GYPSUM SEEDS IN THE SCRUBBER SLURRY. FINAL SYSTEM BLEED WAS WITHDRAWN FROM THE OXIDATION TANK. AT AN AVERAGE OXIDATION TANK PH OF 6, SULFITE OXIDATION AVERAGED 98 PERCENT. FILTER CAKE SOLIDS CONTENT WAS 85 PERCENT, SIMILAR TO THAT OBTAINED WITH TWO SCRUBBER LOOP OPERATIONS. HOWEVER, THE SLURRY SOLIDS SETTLING RATE WAS ONLY ABOUT 0.4 CM/MIN, COMPARED TO ABOUT 0.8 CM/MIN FOR THE TWO LOOP OPERATION. SETTLING RATE FOR UNOXIDIZED SLURRY CONTAINING MAGNESIUM ION NORMALLY DID NOT EXCEED 0.1 CM/MIN WITH 50 TO 60 PERCENT FILTER CAKE SOLIDS.
TCA CONTINUED TO OPERATE WITH MGO ADDITION WITH BOTH LIME AND LIMESTONE SCRUBBING. FLUE GAS WITH HIGH FLY ASH LOADING WAS USED. THE INTENT OF THESE TESTS WAS TO CLARIFY SOME OF THE INCONSISTENT RESULTS OBTAINED DURING EARLIER RUNS MADE IN APRIL-NOVEMBER 1976, DURING WHICH SCRUBBER DOWNCOMER AIR LEAKAGE WAS SUSPECTED IN SOME OF THE TESTS. IN GENERAL, TESTS RUNS MADE IN 1976 HAD HIGHER INLET SO2 CONCENTRATION, MOSTLY GREATER THAN 3000 PPM, WHILE THE RECENT RUNS HAD ONLY ABOUT 2500 PPM. AT THE HIGHER INLET SO2 AND THE HIGHER RESULTANT SO2 MAKE-PER-PASS, THE 1976 TESTS OPERATED EITHER UNSATURATED OR SUPERSATURATED WITH RESPECT TO GYPSUM, DEPENDING ON THE SULFITE OXIDATION LEVEL. SEVERE GYPSUM SCALING OCCURRED WHEN THE OPERATION WAS UNDER GYPSUM-SATURATED MODE. IN THE RECENT RUNS, OPERATION WAS MOSTLY UNDER GYPSUM-SATURATED MODE. HOWEVER, BECAUSE OF THE LOWER INLET SO2 AND LOWER SO2 MAKE-PER-PASS, THE GYPSUM SATURATION LEVELS WERE NOT HIGH ENOUGH TO CAUSE ANY SIGNIFICANT SCALING.

JUNE 78 - JULY 78

FORCED OXIDATION ON THE BLEED STREAM FROM THE VENTURI/SPRAY TOWER SYSTEM CONTINUED THROUGH MID-JUNE. TWO TEST RUNS WERE MADE IN WHICH MGO WAS ADDED TO MAINTAIN AN EFFECTIVE MG++ CONCENTRATION OF 5000 PPM IN THE SCRUBBER SLURRY AND NO RECYCLE STREAM WAS SENT BACK FROM THE OXIDATION TANK (8 FT DIAMETER AND 18 FT TANK LEVEL) TO THE EFFLUENT HOLD TANK. AVERAGE SULFITE OXIDATION WAS 96 PERCENT OR HIGHER AT AN AIR STOICHIOMETRIC RATIO OF 1.6 ATOMS OXYGEN/MOLE SO2 ABSORBED. THE OXIDATION TANK PH WAS 5.4 TO 5.6, ONLY 0.2 UNIT HIGHER THAN THE EFFLUENT HOLD TANK PH. THE FILTER CAKE SOLIDS WAS 85 PERCENT AND THE THE SOLIDS SETTLING RATE WAS 0.4 TO 0.5 CM/MIN.
BOTH SCRUBBER SYSTEMS WERE SHUT DOWN FOR TWO WEEKS FROM JUNE 19 DUE TO A BOILER OUTAGE SCHEDULED FOR RE-ROUTING THE FLUE GAS DUCT FROM THE 800-FT STACK TO THE NO. 11 SMALL STACK.
FOLLOWING THE BOILER OUTAGE, BOTH SCRUBBER SYSTEMS STARTED ON NEW LIME AND LIMESTONE TEST BLOCKS IN WHICH ADIPIC ACID, AN ORGANIC ACID PH BUFFER, WAS ADDED TO THE SCRUBBER SLURRY TO IMPROVE SO2 REMOVAL EFFICIENCY.
INITIAL TEST RUNS WERE CONDUCTED WITHOUT ADIPIC ACID ADDITION TO ESTABLISH THE BASE CASE SO2 REMOVAL IN BOTH LIME AND LIMESTONE SCRUBBING FOR BOTH SCRUBBER SYSTEMS. THE VENTURI/SPRAY TOWER SYSTEM WAS OPERATED WITH TWO-SCRUBBER-LOOP CONFIGURATION WITH FORCED OXIDATION IN THE FIRST LOOP, WHILE THE TCA WAS OPERATED IN A ONE-SCRUBBER-LOOP SCHEME WITHOUT FORCED OXIDATION.
PRELIMINARY RESULTS SHOWED THAT 96 TO 99 PERCENT SO2 REMOVAL WAS CONSISTENTLY ACHIEVED IN THE VENTURI/SPRAY TOWER SYSTEM OPERATING WITH ABOUT 1600 PPM AND 1400 PPM ADIPIC ACID IN THE VENTURI AND SPRAY TOWER, RESPECTIVELY. THESE SO2 REMOVALS COMPARE VERY FAVORABLY WITH THE 66 PERCENT REMOVAL FOR THE BASE CASE LIME RUN WITHOUT ADIPIC ACID. ON THE TCA SYSTEM, A LIME RUN WITH ABOUT 400 PPM ADIPIC ACID GAVE ABOUT 80 PERCENT SO2 REMOVAL, COMPARED TO 67 PERCENT FOR THE BASE CASE RUN.

AUG. 78 - SEP. 78

TESTING WITH ADIPIC ACID AS ADDITIVE FOR IMPROVING SO2 REMOVAL EFFICIENCY CONTINUED THROUGH AUGUST AND SEPTEMBER. BOTH VENTURI/SPRAY TOWER AND TCA SYSTEMS WERE OPERATED ON LIMESTONE SLURRY WITH HIGH FLYASH LOADING DURING THIS PERIOD. THE TCA WAS OPERATED WITHOUT FORCED OXIDATION AND THE VENTURI/SPRAY TOWER WITH TWO-SCRUBBER-LOOP FORCED OXIDATION. AS IN THE LIME TESTS WITH ADIPIC ACID ADDITION CONDUCTED IN JULY, SIGNIFICANT IMPROVEMENT IN SO2 REMOVAL EFFICIENCY WAS ALSO OBSERVED IN THE LIMESTONE TESTS.
UNDER TYPICAL OPERATION, SO2 REMOVAL HIGHER THAN 90 PERCENT COULD BE ACHIEVED BY THE VENTURI/SPRAY TOWER WITH ABOUT 2100 PPM AND 1500 PPM ADIPIC ACID IN THE VENTURI AND SPRAY TOWER, RESPECTIVELY. UNDER THE SAME OPERATING CONDITIONS BUT WITHOUT ADIPIC ACID, THE SO2 REMOVAL WAS ONLY 57 PERCENT. THE SULFITE OXIDATION EFFICIENCY AND WASTE SLUDGE DEWATERING PROPERTIES DID NOT APPEAR TO BE AFFECTED BY THE PRESENCE OF ADIPIC ACID.
IN THE TCA, HIGHER THAN 90 PERCENT SO2 REMOVALS WERE OBTAINED WITH 750 TO 1500 PPM ADIPIC ACID, COMPARED TO 71 PERCENT REMOVAL FOR A BASE CASE RUN WITHOUT ADIPIC ACID.
IN BOTH SCRUBBER SYSTEMS, THE PH IN THE SCRUBBER SLURRY NEEDS TO BE HIGHER THAN ABOUT 5.0, THE UPPER PH BUFFER POINT OF ADIPIC ACID, FOR THIS PARTICULAR ADDITIVE TO BE FULLY EFFECTIVE.
DETERIORATION OR DECOMPOSITION OF ADIPIC ACID APPARENTLY TAKES PLACE IN THE SCRUBBER. ACTUAL FEED RATES OF ADIPIC ACID WERE 2 TO 3 TIMES HIGHER THAN COULD BE ACCOUNTED FOR IN THE SYSTEM DISCHARGE SLUDGE.

SECTION 3
PERFORMANCE DESCRIPTION FOR OPERATIONAL FGD SYSTEMS

UTILITY NAME TENNESSEE VALLEY AUTHORITY

UNIT NAME WIDOWS CREEK 8

UNIT LOCATION BRIDGEPORT ALABAMA

UNIT RATING 550 MW

FUEL CHARACTERISTICS COAL: 3.7% SULFUR, 17% ASH

FGD VENDOR TENNESSEE VALLEY AUTHORITY

PROCESS LIMESTONE

NEW OR RETROFIT RETROFIT

START UP DATE 5/77

EFFICIENCY:
PARTICULATES (ACTUAL) 99.5+ PERCENT

(DESIGN) 99.5 PERCENT

SO2 (ACTUAL) 85-94 PERCENT

(DESIGN) 80.0 PERCENT

WATER MAKE UP

SLUDGE DISPOSAL STABILIZED/SLUDGE POND

OPERATING EXPERIENCE UPDATE:

MONTH	BOILER	OPERATING HOURS A-SIDE	B-SIDE	C-SIDE	D-SIDE	COMMENTS
FEB. 78	586	171	401	370	314	THE OUTAGE TIME FOR TRAINS A AND B WAS REQUIRED TO REPLACE THE RUBBER LINERS IN THE DOWNCOMER AREA WITH STAINLESS STEEL. THIS WILL BE DONE TO THE REMAINING TWO TRAINS AS WELL.
AVAILABILITY = 55%						
OPERABILITY = 54%						
RELIABILITY 61% *						
UTILIZATION = 47%						

* THE UTILITY REPORTED THAT THEY COULD NOT ACCURATELY DETERMINE RELIABILITY BECAUSE OF THEIR INABILITY TO CALCULATE UNIT LOAD DEMAND ON A DAILY BASIS. GENERALLY, IT IS ASSUMMED THAT SYSTEM FORCED OUTAGE HOURS PLUS THE HOURS FGD SYSTEM OPERATED WILL GIVE ROUGHLY THE HOURS THE SYSTEM WAS CALLED UPON TO OPERATE. IN THIS WAY, RELIABILITY CAN BE CALCULATED INDIRECTLY. HOWEVER, IN THIS CASE, TWO TRAINS AT A TIME HAVE BEEN DOWN ON A SCHEDULED OUTAGE FOR NECESSARY MODIFICATIONS. PART OF THIS OUTAGE TIME LIMITED BOILER OPERATION SO THAT THE UNIT COULD NOT RUN AT FULL LOAD WHEN THERE WAS A DEMAND FOR FULL LOAD. FOR THIS CALCULATION IT WAS ASSUMMED THAT THERE WAS A DEMAND FOR FULL LOAD DURING THE ENTIRE SCHEDULED OUTAGE SO THAT ALL OF THE TRAINS WOULD HAVE BEEN CALLED THE ENTIRE SCHEDULED OUTAGE. THE RESULT WAS A VERY CONSERVATIVE ESTIMATE OF RELIABILITY WHERE HOURS CALLED = SYSTEM FORCED OUTAGE HOURS + SYSTEM SCHEDULED OUTAGE + HOURS THE FGD SYSTEM OPERATED.
NOTE: THIS IS A PEDCO ESTIMATE.

MAR. 78	644	585	344	199	583	TRAIN B WAS OUT OF SERVICE MARCH 1 - MARCH 13 TO INSTALL STAINLESS STEEL IN THE ABSORBER AND VENTURI DOWNCOMER AREAS. STAINLESS STEEL COVERS WERE INSTALLED AROUND TWO EXPANSION JOINTS ON TRAIN C, IN ORDER TO PREVENT FLUE GAS LEAKAGE FROM THE EXPANSION JOINTS. A STAINLESS STEEL PLATE WAS WELDED OVER THE ENTRY DOOR OPENINGS TO TRAIN C OUTLET AND BYPASS GUILLOTINE DAMPERS FOR THE PURPOSE OF ELIMINATING GAS LEAKAGE. TRAIN C WAS OUT OF SERVICE MARCH 14 - MARCH 29 TO INSTALL STAINLESS STEEL IN THE ABSORBER AND VENTURI DOWNCOMER AREAS. SEVERAL LIFTER BARS ON THE FEED AND DISCHARGE ENDS OF THE BALL MILL WERE FOUND TO BE BADLY WORN. THE UTILITY HAS HAD WEAR PROBLEMS WITH THE SLURRY SUMP PUMP LINERS AT THE BALL MILL.
AVAILABILITY = 60%						
OPERABILITY = 66%						
RELIABILITY = 59% *						
UTILIZATION = 58%						

EPA UTILITY FGD SURVEY: AUGUST 1978 - SEPTEMBER 1978

TENNESSEE VALLEY AUTHORITY — WIDOWS CREEK 8

MONTH	BOILER	A-SIDE	B-SIDE	C-SIDE	D-SIDE	COMMENTS
APR. 78	540	480	464	576	275	DURING A BRIEF INSPECTION OF THE SCRUBBER IN EARLY APRIL, SOLIDS DEPOSITION WAS NOTICED IN THE MIST ELIMINATOR SECTION OF ALL TRAINS BECAUSE OF PLUGGING THAT HAD OCCURRED IN SEVERAL OF THE MIST ELIMINATOR SPRAY NOZZLES. TRAIN D WAS NOT IN OPERATION FOR 17 DAYS. DURING THIS PERIOD THE MIST ELIMINATOR WAS DISSASSEMBLED BY SECTIONS AND CLEANED. A STAINLESS STEEL LINER WAS INSTALLED ON THE SLOPING AREAS OF THE ABSORBER AND VENTURI. STAINLESS STEEL PLATES WERE INSTALLED OVER THE ENTRY DOOR OPENINGS TO TRAIN D INLET, OUTLET, AND BYPASS GUILLOTINE DAMPERS TO REDUCE GAS LEAKAGE FROM THE ENTRY DOOR OPENINGS. STAINLESS STEEL COVERS WERE INSTALLED AROUND THE FIVE EXPANSION JOINTS ON TRAIN D, TWO EXPANSION JOINTS ON TRAIN A, AND ONE EXPANSION JOINT ON TRAIN B, TO REDUCE GAS LEAKAGE TO THE ATMOSPHERE. THERE CONTINUES TO BE A WEAR PROBLEM WITH PUMP LINERS AT THE BALL MILL. NO CAUSE OR SOLUTION OF THE PROBLEM HAS BEEN ASCERTAINED AS YET.

AVAILABILITY = 69%
OPERABILITY = 83%
RELIABILITY = 67% *
UTILAZATION = 62%

SECTION 3
PERFORMANCE DESCRIPTION FOR OPERATIONAL FGD SYSTEMS

UTILITY NAME	TEXAS UTILITIES
UNIT NAME	MARTIN LAKE 1
UNIT LOCATION	TATUM TEXAS
UNIT RATING	793 MW
FUEL CHARACTERISTICS	COAL: 0.9% SULFUR, 8% ASH
FGD VENDOR	RESEARCH COTTRELL
PROCESS	LIMESTONE
NEW OR RETROFIT	NEW
START UP DATE	8/77

EFFICIENCY:

PARTICULATES	(ACTUAL)	99+ PERCENT
	(DESIGN)	99.4 PERCENT
SO2	(ACTUAL)	73.9 PERCENT
	(DESIGN)	70.5 PERCENT

WATER MAKE UP

SLUDGE DISPOSAL BLENDED/SLUDGE POND

OPERATING EXPERIENCE UPDATE:

FEBRUARY-MARCH 1978 - CERTIFICATION WAS RECEIVED FROM THE EPA FOR THIS UNIT. THE BOILER AND SCRUBBER-ABSORBER SYSTEM OPERATED THROUGHOUT THE PERIOD. THE UTILITY IS STILL HAVING SOME PROBLEMS WITH THE SLURRY HANDLING SYSTEM, AND SOME FORCED OUTAGE TIME OCCURRED.

APRIL-MAY 1978 - THIS UNIT WAS TAKEN OFF LINE IN APRIL FOR AN ANNUAL TWO WEEK OUTAGE. GENERATOR PROBLEMS WERE ENCOUNTERED IN MAY CAUSING THE UNIT TO BE TAKEN OFF LINE THROUGH THE END OF THE MONTH.

JUNE-JULY 1978 - THE SYSTEM IS NOW RUNNING COMMERCIALLY. THE UTILITY HAS ENCOUNTERED SOME PROBLEMS SINCE INITIAL OPERATION. THE DAMPERS FOR EACH ABSORBER MODULE WERE NOT FUNCTIONING PROPERLY. IT HAS BEEN IMPOSSIBLE TO ISOLATE INDIVIDUAL MODULES FOR REPAIRS (THE ENTIRE SYSTEM WOULD HAVE TO BE SHUTDOWN IF REPAIRS WERE REQUIRED ON ONLY ONE MODULE). THERE HAS ALSO BEEN A PROBLEM WITH THE PH METERS. THE METERS HAVE NOT OPERATED PROPERLY FOR SOME TIME NOW.

AUGUST-SEPTEMBER 1978 - ISOLATION DAMPER PROBLEMS ARE CONTINUING. THE UNIT STILL REQUIRES EXCESSIVE MAINTENANCE. FLOW MEASUREMENT INSTRUMENTATION HAS BEEN FAILING. OPACITY HAS BEEN HIGHER THAN EXPECTED (20-25%) RESULTING FROM ESP PROBLEMS. FGD
SYSTEM ACCEPTANCE TESTS WERE PERFORMED BY THE UTILITY DURING AUGUST. RESULTS ARE NOT YET AVAILABLE.

SECTION 3
PERFORMANCE DESCRIPTION FOR OPERATIONAL FGD SYSTEMS

UTILITY NAME	TEXAS UTILITIES
UNIT NAME	MARTIN LAKE 2
UNIT LOCATION	TATUM TEXAS
UNIT RATING	793 MW
FUEL CHARACTERISTICS	COAL: 0.9% SULFUR, 8% ASH
FGD VENDOR	RESEARCH COTTRELL
PROCESS	LIMESTONE
NEW OR RETROFIT	NEW
START UP DATE	5/78
EFFICIENCY:	
PARTICULATES (ACTUAL)	
(DESIGN)	99.4 PERCENT
SO2 (ACTUAL)	
(DESIGN)	70.5 PERCENT (TOTAL)
WATER MAKE UP	
SLUDGE DISPOSAL	STABILIZED/SLUDGE POND

OPERATING EXPERIENCE UPDATE:

JUNE-JULY 1978 - THE FGD SYSTEM WAS TESTED FOR COMPLIANCE IN THE FIRST PART OF AUGUST. RESULTS ARE NOT BACK YET BUT THEY ARE EXPECTED TO BE GOOD, SINCE THE FGD SYSTEM RAN WITH ALL 6 MODULES.

AUGUST-SEPTEMBER 1978 - COMPLIANCE TEST RESULTS HAVE STILL NOT BEEN PUBLISHED. NO MAJOR FGD RELATED PROBLEMS WERE REPORTED.

SECTION 3
PERFORMANCE DESCRIPTION FOR OPERATIONAL FGD SYSTEMS

UTILITY NAME	TEXAS UTILITIES
UNIT NAME	MONTICELLO 3
UNIT LOCATION	MT. PLEASANT TEXAS
UNIT RATING	750 MW
FUEL CHARACTERISTICS	LIGNITE; 1.5% SULFUR, 19% ASH
FGD VENDOR	CHEMICO
PROCESS	LIMESTONE
NEW OR RETROFIT	NEW
START UP DATE	5/78
EFFICIENCY:	
PARTICULATES (ACTUAL)	
(DESIGN)	99.5 PERCENT
SO2 (ACTUAL)	
(DESIGN)	74.0 PERCENT
WATER MAKE UP	CLOSED LOOP
SLUDGE DISPOSAL	STABILIZED/SLUDGE POND

OPERATING EXPERIENCE UPDATE:

APR. 78 THE TEXAS AIR CONTROL BOARD REPORTED THAT THE TEXAS UTILITIES 750 MW MONTICELLO UNIT 3
MAY 78 BEGAN FGD OPERATIONS DURING THE REPORT PERIOD. AS OF YET THE UNIT HAS NOT RUN AT FULL LOAD BUT IS EXPECTED TO BY THE END OF AUGUST.

JUNE 78 THE UNIT IS NOT AT FULL LOAD YET. ONE OF THE THREE FGD MODULES IS FULLY OPERATIONAL.
JULY 78 ANOTHER ONE IS PARTIALLY OPERATIONAL, WHILE THE THIRD IS NOT OPERATING AT ALL AS YET.

AUG. 78 THE COMPLIANCE TEST HAS NOT YET TAKEN PLACE. THE FGD SYSTEM IS OPERATIONAL. INSTRUMENTA-
SEP. 78 TION INDICATES THAT THE UNIT IS IN COMPLIANCE.

SECTION 3
PERFORMANCE DESCRIPTION FOR OPERATIONAL FGD SYSTEMS

UTILITY NAME	UTAH POWER & LIGHT
UNIT NAME	HUNTINGTON 1
UNIT LOCATION	PRICE UTAH
UNIT RATING	415 MW
FUEL CHARACTERISTICS	COAL: 0.5% SULFUR, 10% ASH
FGD VENDOR	CHEMICO
PROCESS	LIME
NEW OR RETROFIT	NEW
START UP DATE	5/78
EFFICIENCY:	
PARTICULATES (ACTUAL)	
(DESIGN)	99.5 PERCENT
SO2 (ACTUAL)	
(DESIGN)	80.0 PERCENT
WATER MAKE UP	CLOSED LOOP .72 GPM/MW
SLUDGE DISPOSAL	STABILIZED/LANDFILL

OPERATING EXPERIENCE UPDATE:

APRIL-MAY 1978 - INITIAL OPERATIONS BEGAN AT THIS UNIT ON MAY 10, 1978. DUE TO THE RECENT OPERATING STATUS OF THE SYSTEM HOURS OF OPERATION WERE NOT AVAILABLE FOR THE APRIL-MAY REPORT PERIOD.

MONTH	PERIOD HOURS	BOILER HOURS	FGD SYSTEM PARAMETERS HOURS	OPERABILITY	UTILIZATION
JUNE 78	720	720	470	65%	65%
JULY 78	744	731	714	98%	96%
	NO MAJOR PROBLEMS WERE REPORTED BY THE UTILITY FOR THIS PERIOD. 10-20% OF THE FLUE GAS WAS BYPASSED THROUGH THE USE OF AN ADJUSTABLE DAMPER.				
AUG. 78	744	544	544	100%	73%
SEP. 78	720	496	496	100%	69%
	THERE WERE NO FORCED FGD OUTAGES DURING THE AUGUST-SEPTEMBER PERIOD. MINOR PROBLEMS WERE EXPERIENCED WITH INSTRUMENTATION. A THREE WEEK BOILER OUTAGE OCCURRED AS A RESULT OF AN EXPLOSION.				

SECTION 4
SUMMARY OF FGD SYSTEMS BY COMPANY

UTILITY	TOTAL		STATUS: OPERATIONAL		CONSTRUCTION		CONTRACT AWARDED		PLANNED	
	NO	MW	NO	MW	NO	MW	NO	MW	NO	MW
ALABAMA ELECTRIC COOP	2	450.	1	225.	1	225.	0	0.	0	0.
ALLEGHENY POWER SYSTEM	2	1250.	0	0.	2	1250.	0	0.	0	0.
ARIZONA ELECTRIC POWER COOP	2	400.	1	200.	1	200.	0	0.	0	0.
ARIZONA PUBLIC SERVICE	8	2804.	2	365.	1	550.	2	1510.	3	579.
ASSOCIATED ELECTRIC COOP	1	670.	0	0.	0	0.	1	670.	0	0.
BASIN ELECTRIC POWER COOP	5	2600.	0	0.	2	1140.	1	455.	2	1005.
BIG RIVERS ELECTRIC	2	490.	0	0.	2	490.	0	0.	0	0.
CENTRAL ILLINOIS LIGHT	2	800.	1	400.	0	0.	0	0.	1	400.
CENTRAL ILLINOIS PUBLIC SERV	1	575.	0	0.	1	575.	0	0.	0	0.
CENTRAL MAINE POWER	1	600.	0	0.	0	0.	0	0.	1	600.
CINCINNATI GAS & ELECTRIC	1	600.	0	0.	0	0.	1	600.	0	0.
COLORADO UTE ELECTRIC ASSN.	2	900.	0	0.	2	900.	0	0.	0	0.
COLUMBUS & SOUTHERN OHIO ELEC.	4	1550.	2	800.	0	0.	0	0.	2	750.
COMMONWEALTH EDISON	1	425.	0	0.	1	425.	0	0.	0	0.
COOPERATIVE POWER ASSOCIATION	2	1090.	0	0.	2	1090.	0	0.	0	0.
DELMARVA POWER & LIGHT	1	180.	0	0.	1	180.	0	0.	0	0.
DUQUESNE LIGHT	2	920.	2	920.	0	0.	0	0.	0	0.
EASTERN KENTUCKY POWER COOP	1	500.	0	0.	0	0.	1	500.	0	0.
GENERAL PUBLIC UTILITIES	2	1600.	0	0.	0	0.	0	0.	2	1600.
GULF POWER	1	23.	1	23.	0	0.	0	0.	0	0.
HOOSIER ENERGY	2	980.	0	0.	2	980.	0	0.	0	0.
INDIANAPOLIS POWER & LIGHT	2	1060.	1	530.	1	530.	0	0.	0	0.
KANSAS CITY POWER & LIGHT	3	1020.	3	1020.	0	0.	0	0.	0	0.
KANSAS POWER & LIGHT	4	1885.	3	1205.	1	680.	0	0.	0	0.
KENTUCKY UTILITIES	1	64.	1	64.	0	0.	0	0.	0	0.
LAKELAND UTILITIES	1	350.	0	0.	0	0.	1	350.	0	0.
LOUISVILLE GAS & ELECTRIC	8	2283.	4	851.	3	1102.	1	330.	0	0.
MINNESOTA POWER & LIGHT	1	500.	0	0.	1	500.	0	0.	0	0.
MINNKOTA POWER COOPERATIVE	1	450.	1	450.	0	0.	0	0.	0	0.
MONTANA POWER	4	2120.	2	720.	0	0.	2	1400.	0	0.
NEVADA POWER	10	3125.	3	375.	0	0.	0	0.	7	2750.
NIAGARA MOHAWK POWER COOP	1	100.	0	0.	0	0.	1	100.	0	0.
NORTHERN INDIANA PUB SERVICE	3	705.	1	115.	0	0.	0	0.	2	590.
NORTHERN STATES POWER	4	3140.	2	1420.	0	0.	2	1720.	0	0.
OTTER TAIL POWER	1	400.	0	0.	1	400.	0	0.	0	0.
PACIFIC GAS AND ELECTRIC	2	1600.	0	0.	0	0.	0	0.	2	1600.
PACIFIC POWER & LIGHT	1	509.	0	0.	1	509.	0	0.	0	0.
PENNSYLVANIA POWER	3	2475.	2	1650.	1	825.	0	0.	0	0.
PHILADELPHIA ELECTRIC	4	846.	1	120.	0	0.	0	0.	3	726.
PUBLIC SERVICE OF INDIANA	1	650.	0	0.	0	0.	0	0.	1	650.
PUBLIC SERVICE OF NEW MEXICO	4	1560.	2	620.	0	0.	2	940.	0	0.
SALT RIVER PROJECT	3	1050.	0	0.	2	700.	0	0.	1	350.
SAN MIGUEL ELECTRIC COOP	1	400.	0	0.	1	400.	0	0.	0	0.
SEMINOLE ELECTRIC	1	600.	0	0.	0	0.	0	0.	1	600.
SIKESTON BOARD OF MUNIC. UTIL.	1	235.	0	0.	1	235.	0	0.	0	0.
SOUTH CAROLINA PUBLIC SERVICE	2	580.	1	280.	0	0.	1	300.	0	0.
SOUTHERN ILLINOIS POWER COOP	2	484.	0	0.	1	184.	0	0.	1	300.
SOUTHERN INDIANA GAS & ELEC	1	250.	0	0.	1	250.	0	0.	0	0.
SOUTHERN MISSISSIPPI ELECTRIC	2	360.	1	180.	1	180.	0	0.	0	0.
SOUTHWESTERN ELECTRIC POWER	1	720.	0	0.	0	0.	1	720.	0	0.
SPRINGFIELD CITY UTILITIES	1	200.	1	200.	0	0.	0	0.	0	0.
SPRINGFIELD WATER LIGHT & PWR	1	190.	0	0.	0	0.	1	190.	0	0.
ST. JOE ZINC	1	60.	0	0.	1	60.	0	0.	0	0.
TENNESSEE VALLEY AUTHORITY	4	1145.	3	570.	1	575.	0	0.	0	0.
TEXAS MUNICIPAL POWER AGENCY	1	400.	0	0.	0	0.	1	400.	0	0.
TEXAS POWER & LIGHT	3	2045.	0	0.	0	0.	1	545.	2	1500.
TEXAS UTILITIES	6	4672.	3	2336.	1	793.	1	793.	1	750.
UTAH POWER & LIGHT	3	1215.	1	415.	1	400.	1	400.	0	0.
WISCONSIN POWER & LIGHT	1	527.	0	0.	0	0.	1	527.	0	0.
TOTALS	139	59382.	46	16054.	38	16128.	23	12450.	32	14750.

NOTE - PLANNED STATUS INCLUDES LETTER OF INTENT SIGNED, REQUESTING/EVALUTING BIDS, AND CONSIDERING ONLY FGD SYSTEMS

SECTION 5
SUMMARY OF FGD SYSTEMS BY VENDOR

MANUFACTURER/PROCESS	TOTAL NO.	TOTAL MW	STATUS: OPERATIONAL NO.	OPERATIONAL MW	CONSTRUCTION NO.	CONSTRUCTION MW	CONTRACT AWARDED NO.	CONTRACT AWARDED MW
ADL/COMBUSTION EQUIP ASSOCIATE								
DOUBLE ALKALI	1	277.	0	0.	1	277.	0	0.
LIME/ALKALINE FLYASH	5	2570.	3	1170.	0	0.	2	1400.
SODIUM CARBONATE	3	375.	3	375.	0	0.	0	0.
TOTAL -	9	3222.	6	1545.	1	277.	2	1400.
AIR CORRECTION DIVISION, UOP								
LIME (MG-PROMOTED)	2	800.	2	800.	0	0.	0	0.
LIME/LIMESTONE	1	10.	1	10.	0	0.	0	0.
LIMESTONE	4	1875.	2	730.	1	425.	1	720.
SODIUM CARBONATE	1	509.	0	0.	1	509.	0	0.
TOTAL -	8	3194.	5	1540.	2	934.	1	720.
AMERICAN AIR FILTER								
LIME	4	1049.	1	64.	3	985.	0	0.
LIME (CARBIDE)	2	603.	2	603.	0	0.	0	0.
TOTAL -	6	1652.	3	667.	3	985.	0	0.
ATOMICS INTERNATIONAL								
AQUEOUS CARBONATE	1	100.	0	0.	0	0.	1	100.
TOTAL -	1	100.	0	0.	0	0.	1	100.
BABCOCK & WILCOX								
LIME	5	1850.	0	0.	2	1250.	1	600.
LIMESTONE	7	2569.	2	1100.	3	819.	2	650.
TOTAL -	10	4419.	2	1100.	5	2069.	3	1250.
BUFLL/ENVIROTECH								
DOUBLE ALKALI	1	575.	0	0.	1	575.	0	0.
TOTAL -	1	575.	0	0.	1	575.	0	0.
BUREAU OF MINES								
CITRATE	1	60.	0	0.	1	60.	0	0.
TOTAL -	1	60.	0	0.	1	60.	0	0.
CHEMICO								
LIME	7	3785.	5	2985.	1	400.	1	400.
LIME/ALKALINE FLYASH	1	527.	0	0.	0	0.	1	527.
LIME/LIMESTONE	1	10.	1	10.	0	0.	0	0.
LIMESTONE	1	750.	1	750.	0	0.	0	0.
TOTAL -	10	5072.	7	3745.	1	400.	2	927.
CHIYODA INTERNATIONAL								
LIMESTONE	1	23.	1	23.	0	0.	0	0.
TOTAL -	1	23.	1	23.	0	0.	0	0.
COMBUSTION ENGINEERING								
LIME	5	1790.	2	200.	2	1090.	1	500.
LIME (CARBIDE)	2	248.	2	248.	0	0.	0	0.
LIME/LIMESTONE	2	660.	0	0.	1	330.	1	330.
LIMESTONE	7	3405.	3	1205.	2	1255.	2	945.
LIMESTONE/ALKALINE FLYASH	4	3140.	2	1420.	0	0.	2	1720.
TOTAL -	20	9243.	9	3073.	5	2675.	6	3495.
DAVY POWERGAS								
WELLMAN LORD	6	1855.	3	735.	1	180.	2	940.
TOTAL -	6	1855.	3	735.	1	180.	2	940.
FMC CORPORATION								
DOUBLE ALKALI	1	250.	0	0.	1	250.	0	0.
TOTAL -	1	250.	0	0.	1	250.	0	0.
MITSUBISHI INTERNATIONAL								
LIMESTONE	2	980.	0	0.	2	980.	0	0.

SECTION 5
SUMMARY OF FGD SYSTEMS BY VENDOR

MANUFACTURER/PROCESS	TOTAL NO.	TOTAL MW	STATUS: OPERATIONAL NO.	OPERATIONAL MW	CONSTRUCTION NO.	CONSTRUCTION MW	CONTRACT AWARDED NO.	CONTRACT AWARDED MW
TOTAL -	2	980.	0	0.	2	980.	0	0.
NOT SELECTED								
LIME	1	455.	0	0.	0	0.	1	455.
TOTAL -	1	455.	0	0.	0	0.	1	455.
PEABODY ENGINEERING								
LIME/ALKALINE FLYASH	1	500.	0	0.	1	500.	0	0.
LIMESTONE	4	1350.	1	225.	3	1125.	0	0.
TOTAL -	5	1850.	1	225.	4	1625.	0	0.
PULLMAN KELLOGG								
LIME	1	825.	0	0.	1	825.	0	0.
LIMESTONE	3	1370.	0	0.	2	700.	1	670.
TOTAL -	4	2195.	0	0.	3	1525.	1	670.
RESEARCH COTTRELL								
LIMESTONE	13	6147.	5	2151.	6	3013.	2	983.
TOTAL -	13	6147.	5	2151.	6	3013.	2	983.
RILEY STOKER / ENVIRONEERING								
LIMESTONE	3	760.	2	580.	1	180.	0	0.
TOTAL -	3	760.	2	580.	1	180.	0	0.
TENNESSEE VALLEY AUTHORITY								
LIMESTONE	1	550.	1	550.	0	0.	0	0.
TOTAL -	1	550.	1	550.	0	0.	0	0.
UNITED ENGINEERS								
MAGNESIUM OXIDE	1	120.	1	120.	0	0.	0	0.
NOT SELECTED	2	1510.	0	0.	0	0.	2	1510.
TOTAL -	3	1630.	1	120.	0	0.	2	1510.
WHEELABRATOR-FRYE/A.I.								
AQUEOUS CARBONATE	1	400.	0	0.	1	400.	0	0.
TOTAL -	1	400.	0	0.	1	400.	0	0.
	107	44632.	46	16054.	38	16128.	23	12450.

SECTION 6
SUMMARY OF NEW AND RETROFIT FGD SYSTEMS BY PROCESS

PROCESS	NEW OR RETROFIT	OPERATIONAL NO.	OPERATIONAL MW	CONSTRUCTION NO.	CONSTRUCTION MW	CONTRACT AWARDED NO.	CONTRACT AWARDED MW	PLANNED NO.	PLANNED MW	TOTAL NO. OF PLANTS NO.	TOTAL NO. OF PLANTS MW
LIME	N	3	2065	9	4550	4	1955	0	0	16	8570
	R	5	1184	0	0	0	0	0	0	5	1184
LIME (CARBIDE)	N	1	425	0	0	0	0	0	0	1	425
	R	3	426	0	0	0	0	0	0	3	426
LIME (MG-PROMOTED)	N	2	800	0	0	0	0	0	0	2	800
	R	0	0	0	0	0	0	0	0	0	0
LIME/ALKALINE FLYASH	N	3	1170	1	500	3	1927	0	0	7	3597
	R	0	0	0	0	0	0	3	579	3	579
LIME/LIMESTONE	N	0	0	0	0	0	0	0	0	0	0
	R	2	20	1	330	1	330	0	0	4	680
LIMESTONE	N	14	6501	18	7497	8	3968	6	4050	46	22016
	R	4	813	2	1000	0	0	0	0	6	1813
LIMESTONE/ALKALINE FLYASH	N	2	1420	0	0	2	1720	0	0	4	3140
	R	0	0	0	0	0	0	0	0	0	0
SUBTOTAL - LIME/LIMESTONE	N	25.	12381.	28.	12547.	17.	9570.	6.	4050.	76.	38548.
	R	14.	2443.	3.	1330.	1.	330.	3.	579.	21.	4682.
AQUEOUS CARBONATE	N	0	0	1	400	0	0	0	0	1	400
	R	0	0	0	0	1	100	0	0	1	100
CITRATE	N	0	0	0	0	0	0	0	0	0	0
	R	0	0	1	60	0	0	0	0	1	60
DOUBLE ALKALI	N	0	0	2	825	0	0	0	0	2	825
	R	0	0	1	277	0	0	0	0	1	277
MAGNESIUM OXIDE	N	0	0	0	0	0	0	0	0	0	0
	R	1	120	0	0	0	0	3	726	4	846
NOT SELECTED	N	0	0	0	0	0	0	18	8805	18	8805
	R	0	0	0	0	2	1510	2	590	4	2100
SODIUM CARBONATE	N	1	125	1	509	0	0	0	0	2	634
	R	2	250	0	0	0	0	0	0	2	250
WELLMAN LORD	N	1	314	0	0	2	940	0	0	3	1254
	R	2	421	1	180	0	0	0	0	3	601
TOTALS	N	27.	12820.	32.	14281.	19.	10510.	24.	12855.	102.	50466.
	R	19.	3234.	6.	1847.	4.	1940.	8.	1895.	37.	8916.
LIME/LIMESTONE % OF TOTAL MW	N	97		88		91		32		76	
	R	76		72		17		31		53	

SECTION 7
SUMMARY OF OPERATING FGD SYSTEMS BY
PROCESS AND GENERATING UNITS

PROCESS/GENERATING UNITS	FGD/MW	STARTUP	EXPERIENCE(MO.)
LIME			
BRUCE MANSFIELD 1	825	4-76	30
BRUCE MANSFIELD 2	825	7-77	15
ELRAMA POWER STATION	510	10-75	36
GREEN RIVER 1,2 & 3	64	9-75	37
HAWTHORN 3	100	11-72	71
HAWTHORN 4	100	8-72	74
HUNTINGTON 1	415	5-78	5
PHILLIPS POWER STATION	410	7-73	63
	3249.		331
LIME (CARBIDE)			
CANE RUN 4	178	8-76	26
CANE RUN 5	183	12-77	10
MILL CREEK 3	425	8-78	2
PADDYS RUN 6	65	4-73	66
	851.		104
LIME (MG-PROMOTED)			
CONESVILLE 5	400	1-77	21
CONESVILLE 6	400	6-78	4
	800.		25
LIME/ALKALINE FLYASH			
COLSTRIP 1	360	11-75	35
COLSTRIP 2	360	8-76	26
MILTON R. YOUNG 2	450	9-77	13
	1170.		74
LIME/LIMESTONE			
SHAWNEE 10A	10	4-72	78
SHAWNEE 10B	10	4-72	78
	20.		156
LIMESTONE			
APACHE 2	200	8-78	2
CHOLLA 1	115	10-73	60
CHOLLA 2	250	6-78	4
DUCK CREEK 1	400	7-78	3
JEFFREY 1	680	8-78	2
LA CYGNE 1	820	2-73	68
LAWRENCE 4	125	12-68	118
LAWRENCE 5	400	11-71	83
MARTIN LAKE 1	793	8-77	14
MARTIN LAKE 2	793	5-78	5
MONTICELLO 3	750	5-78	5
PETERSBURG 3	530	10-77	12
R. D. MORROW 1	180	8-78	2
SCHOLZ 1B & 2B	23	8-78	2
SOUTHWEST 1	200	4-77	18
TOMBIGBEE 2	225	9-78	1
WIDOWS CREEK 8	550	5-77	17
WINYAH 2	280	7-77	15
	7314.		431
LIMESTONE/ALKALINE FLYASH			
SHERBURNE 1	710	3-76	31

SECTION 7
SUMMARY OF OPERATING FGD SYSTEMS BY
PROCESS AND GENERATING UNITS

PROCESS/GENERATING UNITS	FGD/MW	STARTUP	EXPERIENCE(MO.)
SHERBURNE 2	710	4-77	18
	1420.		44
MAGNESIUM OXIDE			
EDDYSTONE 1A	120	9-75	37
	120.		37
SODIUM CARBONATE			
REID GARDNER 1	125	4-74	54
REID GARDNER 2	125	4-74	54
REID GARDNER 3	125	7-76	27
	375.		135
WELLMAN LORD			
DEAN H. MITCHELL 11	115	11-76	23
SAN JUAN 1	314	4-78	6
SAN JUAN 2	306	7-78	3
	735.		32

SECTION 8
SUMMARY OF SLUDGE DISPOSAL PRACTICES FOR OPERATIONAL FGD SYSTEMS

PROCESS/GENERATING UNIT	--SLUDGE-- STABILIZED	--SLUDGE-- UNSTABILIZED	---POND--- LINED	---POND--- UNLINED
LIME				
BRUCE MANSFIELD 1	825			
BRUCE MANSFIELD 2	825			
ELRAMA POWER STATION	510			510
GREEN RIVER 1,2 & 3		64		64
HAWTHORN 3		100		100
HAWTHORN 4		100		100
HUNTINGTON 1	415			415
PHILLIPS POWER STATION	410			410
TOTAL	2985.	264.	0.	1599.
LIME (CARBIDE)				
CANE RUN 4	178			178
CANE RUN 5	183			183
MILL CREEK 3	425			
PADDYS RUN 6	65			65
TOTAL	851.	0.	0.	426.
LIME (MG-PROMOTED)				
CONESVILLE 5	400			400
CONESVILLE 6	400			400
TOTAL	800.	0.	0.	800.
LIME/ALKALINE FLYASH				
COLSTRIP 1		360	360	
COLSTRIP 2		360		360
MILTON R. YOUNG 2		450		
TOTAL	0.	1170.	360.	360.
LIMESTONE				
APACHE 2		200		200
CHOLLA 1		115		115
CHOLLA 2		250		250
DUCK CREEK 1		400		400
JEFFREY 1		680	680	
LA CYGNE 1		820		820
LAWRENCE 4		125		125
LAWRENCE 5		400		400
MARTIN LAKE 1	793		793	
MONTICELLO 3	750		750	
PETERSBURG 3	530			530
R. D. MORROW 1	180			180
SCHOLZ 1B & 2B		23	23	
TOMBIGBEE 2		225	225	
WIDOWS CREEK 8		550		550
WINYAH 2		280		280
TOTAL	2253.	4068.	2471.	3850.
LIMESTONE/ALKALINE FLYASH				
SHERBURNE 1		710	710	
SHERBURNE 2		710	710	
TOTAL	0.	1420.	1420.	0.
SODIUM CARBONATE				
REID GARDNER 1		125		

SECTION A
SUMMARY OF SLUDGE DISPOSAL PRACTICES FOR OPERATIONAL FGD SYSTEMS

PROCESS/GENERATING UNIT	--SLUDGE-- STABILIZED	--SLUDGE-- UNSTABILIZED	---POND--- LINED	---POND--- UNLINED
REID GARDNER 2		125		
REID GARDNER 3		125		
TOTAL	0.	375.	0.	0.

SECTION 9
SUMMARY OF FGD SYSTEMS BY PROCESS AND REGULATORY CLASS

PROCESS	REGULATORY CLASS	OPERATIONAL NO.	OPERATIONAL MW	CONSTRUCTION NO.	CONSTRUCTION MW	CONTRACT AWARDED NO.	CONTRACT AWARDED MW	PLANNED NO.	PLANNED MW	TOTAL NO. PLANTS NO.	TOTAL NO. PLANTS MW
LIME	A	1	415	7	3230	3	1500	0	0	11	5145
	B	6	2770	2	1320	1	455	0	0	9	4545
	C	1	64	0	0	0	0	0	0	1	64
	D	0	0	0	0	0	0	0	0	0	0
	E	0	0	0	0	0	0	0	0	0	0
LIME (CARBIDE)	A	0	0	0	0	0	0	0	0	0	0
	B	3	786	0	0	0	0	0	0	3	786
	C	1	65	0	0	0	0	0	0	1	65
	D	0	0	0	0	0	0	0	0	0	0
	E	0	0	0	0	0	0	0	0	0	0
LIME (MG-PROMOTED)	A	0	0	0	0	0	0	0	0	0	0
	B	2	800	0	0	0	0	0	0	2	800
	C	0	0	0	0	0	0	0	0	0	0
	D	0	0	0	0	0	0	0	0	0	0
	E	0	0	0	0	0	0	0	0	0	0
LIME/ALKALINE FLYASH	A	2	720	1	500	1	527	0	0	4	1747
	B	1	450	0	0	2	1400	3	579	6	2429
	C	0	0	0	0	0	0	0	0	0	0
	D	0	0	0	0	0	0	0	0	0	0
	E	0	0	0	0	0	0	0	0	0	0
LIME/LIMESTONE	A	0	0	0	0	0	0	0	0	0	0
	B	0	0	1	330	1	330	0	0	2	660
	C	2	20	0	0	0	0	0	0	2	20
	D	0	0	0	0	0	0	0	0	0	0
	E	0	0	0	0	0	0	0	0	0	0
LIMESTONE	A	9	4151	9	3527	8	5968	3	2100	29	13746
	B	6	1770	9	3970	0	0	3	1950	18	7690
	C	3	1593	2	1000	0	0	0	0	5	2393
	D	0	0	0	0	0	0	0	0	0	0
	E	0	0	0	0	0	0	0	0	0	0
LIMESTONE/ALKALINE FLYASH	A	0	0	0	0	0	0	0	0	0	0
	B	2	1420	0	0	2	1720	0	0	4	3140
	C	0	0	0	0	0	0	0	0	0	0
	D	0	0	0	0	0	0	0	0	0	0
	E	0	0	0	0	0	0	0	0	0	0
SUBTOTAL - LIME/LIMESTONE	A	12.	5286.	17.	7257.	12.	5995.	3.	2100.	44.	20638.
	B	20.	7996.	12.	5620.	6.	3905.	6.	2529.	44.	20050.
	C	7.	1542.	2.	1000.	0.	0.	0.	0.	9.	2542.
	D	0.	0.	0.	0.	0.	0.	0.	0.	0.	0.
	E	0.	0.	0.	0.	0.	0.	0.	0.	0.	0.
AQUEOUS CARBONATE	A	0	0	1	400	0	0	0	0	1	400
	B	0	0	0	0	0	0	0	0	0	0
	C	0	0	0	0	1	100	0	0	1	100
	D	0	0	0	0	0	0	0	0	0	0
	E	0	0	0	0	0	0	0	0	0	0
CITRATE	A	0	0	0	0	0	0	0	0	0	0
	B	0	0	1	60	0	0	0	0	1	60
	C	0	0	0	0	0	0	0	0	0	0
	D	0	0	0	0	0	0	0	0	0	0
	E	0	0	0	0	0	0	0	0	0	0

A. BOILER CONSTRUCTED SUBJECT TO FEDERAL NSPS
B. BOILER SUBJECT TO STATE STANDARD THAT IS MORE STRINGENT THAN THE FEDERAL NSPS
C. BOILER SUBJECT TO STATE STANDARD THAT IS EQUAL TO OR LESS STRINGENT THAN NSPS
D. OTHER
E. REGULATORY CLASS UNKNOWN

SECTION 9
SUMMARY OF FGD SYSTEMS BY PROCESS AND REGULATORY CLASS

PROCESS	REGULATORY CLASS	OPERATIONAL NO.	OPERATIONAL MW	CONSTRUCTION NO.	CONSTRUCTION MW	CONTRACT AWARDED NO.	CONTRACT AWARDED MW	PLANNED NO.	PLANNED MW	TOTAL NO. PLANTS NO.	TOTAL NO. PLANTS MW
DOUBLE ALKALI	A	0	0	2	825	0	0	0	0	2	825
	B	0	0	1	277	0	0	0	0	1	277
	C	0	0	0	0	0	0	0	0	0	0
	D	0	0	0	0	0	0	0	0	0	0
	E	0	0	0	0	0	0	0	0	0	0
MAGNESIUM OXIDE	A	0	0	0	0	0	0	0	0	0	0
	B	1	120	0	0	0	0	3	726	4	846
	C	0	0	0	0	0	0	0	0	0	0
	D	0	0	0	0	0	0	0	0	0	0
	E	0	0	0	0	0	0	0	0	0	0
NOT SELECTED	A	0	0	0	0	0	0	14	7050	14	7050
	B	0	0	0	0	2	1510	4	1755	6	3265
	C	0	0	0	0	0	0	2	590	2	590
	D	0	0	0	0	0	0	0	0	0	0
	E	0	0	0	0	0	0	0	0	0	0
SODIUM CARBONATE	A	3	375	0	0	0	0	0	0	3	375
	B	0	0	1	509	0	0	0	0	1	509
	C	0	0	0	0	0	0	0	0	0	0
	D	0	0	0	0	0	0	0	0	0	0
	E	0	0	0	0	0	0	0	0	0	0
WELLMAN LORD	A	0	0	0	0	0	0	0	0	0	0
	B	2	620	0	0	2	940	0	0	4	1560
	C	1	115	1	180	0	0	0	0	2	295
	D	0	0	0	0	0	0	0	0	0	0
	E	0	0	0	0	0	0	0	0	0	0
TOTALS	A	15.	5661.	20.	8482.	12.	5995.	17.	9150.	64.	29288.
	B	23.	8736.	15.	6466.	10.	6355.	13.	5010.	61.	26567.
	C	8.	1657.	5.	1180.	1.	100.	2.	590.	14.	3527.
	D	0.	0.	0.	0.	0.	0.	0.	0.	0.	0.
	E	0.	0.	0.	0.	0.	0.	0.	0.	0.	0.
LIME/STONE % OF TOTAL MW	A	93		86		100		23		70	
	B	92		87		61		50		75	
	C	93		85		0		0		72	
	D	0		0		0		0		0	
	E	0		0		0		0		0	

A. BOILER CONSTRUCTED SUBJECT TO FEDERAL NSPS
B. BOILER SUBJECT TO STATE STANDARD THAT IS MORE STRINGENT THAN THE FEDERAL NSPS
C. BOILER SUBJECT TO STATE STANDARD THAT IS EQUAL TO OR LESS STRINGENT THAN NSPS
D. OTHER
E. REGULATORY CLASS UNKNOWN

SECTION 10
SUMMARY OF FGD SYSTEMS UNDER CONSTRUCTION

UTILITY COMPANY POWER STATION	NEW OR RETROFIT	SIZE OF FGD UNIT (MW)	PROCESS/VENDOR	START-UP DATE
ALABAMA ELECTRIC COOP TOMBIGBEE 3	N	225	PEABODY ENGINEERING LIMESTONE	6/79
ALLEGHENY POWER SYSTEM PLEASANTS 1	N	625	BABCOCK & WILCOX LIME	3/79
ALLEGHENY POWER SYSTEM PLEASANTS 2	N	625	BABCOCK & WILCOX LIME	3/80
ARIZONA ELECTRIC POWER COOP APACHE 3	N	200	RESEARCH COTTRELL LIMESTONE	4/79
ARIZONA PUBLIC SERVICE CHOLLA 4		350	RESEARCH COTTRELL LIMESTONE	6/80
BASIN ELECTRIC POWER COOP LARAMIE RIVER 1	N	570	RESEARCH COTTRELL LIMESTONE	4/80
BASIN ELECTRIC POWER COOP LARAMIE RIVER 2	N	570	RESEARCH COTTRELL LIMESTONE	10/80
BIG RIVERS ELECTRIC GREEN 1	N	250	AMERICAN AIR FILTER LIME	12/79
BIG RIVERS ELECTRIC GREEN 2	N	240	AMERICAN AIR FILTER LIME	12/80
CENTRAL ILLINOIS PUBLIC SERV NEWTON 1	N	575	BUELL/ENVIROTECH DOUBLE ALKALI	11/79
COLORADO UTE ELECTRIC ASSN. CRAIG 1	N	450	PEABODY ENGINEERING LIMESTONE	3/79
COLORADO UTE ELECTRIC ASSN. CRAIG 2	N	450	PEABODY ENGINEERING LIMESTONE	3/79
COMMONWEALTH EDISON POWERTON 51	R	425	AIR CORRECTION DIVISION, UOP LIMESTONE	3/79
COOPERATIVE POWER ASSOCIATION COAL CREEK 1	N	545	COMBUSTION ENGINEERING LIME	2/79
COOPERATIVE POWER ASSOCIATION COAL CREEK 2	N	545	COMBUSTION ENGINEERING LIME	11/79
DELMARVA POWER & LIGHT DELWARE CITY 1, 2 & 3	R	180	DAVY POWERGAS WELLMAN LORD	4/80
HOOSIER ENERGY MEROM 1	N	490	MITSUBISHI INTERNATIONAL LIMESTONE	4/81
HOOSIER ENERGY MEROM 2	N	490	MITSUBISHI INTERNATIONAL LIMESTONE	1/82
INDIANAPOLIS POWER & LIGHT PETERSBURG 4	N	530	RESEARCH COTTRELL LIMESTONE	4/82
KANSAS POWER & LIGHT JEFFREY 2	N	680	COMBUSTION ENGINEERING LIMESTONE	6/80
LOUISVILLE GAS & ELECTRIC CANE RUN 6	R	277	ADL/COMBUSTION EQUIP ASSOCIATE DOUBLE ALKALI	12/78
LOUISVILLE GAS & ELECTRIC MILL CREEK 1	R	330	COMBUSTION ENGINEERING LIME/LIMESTONE	1/81
LOUISVILLE GAS & ELECTRIC MILL CREEK 4	N	495	AMERICAN AIR FILTER LIME	6/80

SECTION 10
SUMMARY OF FGD SYSTEMS UNDER CONSTRUCTION

UTILITY COMPANY POWER STATION	NEW OR RETROFIT	SIZE OF FGD UNIT (MW)	PROCESS/VENDOR	START-UP DATE
MINNESOTA POWER & LIGHT CLAY BOSWELL 4	N	500	PEABODY ENGINEERING LIME/ALKALINE FLYASH	5/80
OTTER TAIL POWER COYOTE 1	N	400	WHEELABRATOR-FRYE/A.I. AQUEOUS CARBONATE	5/81
PACIFIC POWER & LIGHT JIM BRIDGER 4	N	509	AIR CORRECTION DIVISION, UOP SODIUM CARBONATE	9/79
PENNSYLVANIA POWER BRUCE MANSFIELD 3	N	825	PULLMAN KELLOGG LIME	4/80
SALT RIVER PROJECT CORONADO 1	N	350	PULLMAN KELLOGG LIMESTONE	1/79
SALT RIVER PROJECT CORONADO 2	N	350	PULLMAN KELLOGG LIMESTONE	1/80
SAN MIGUEL ELECTRIC COOP SAN MIGUEL 1	N	400	BABCOCK & WILCOX LIMESTONE	6/80
SIKESTON BOARD OF MUNIC. UTIL. SIKESTON POWER STATION	N	235	BABCOCK & WILCOX LIMESTONE	6/81
SOUTHERN ILLINOIS POWER COOP MARION 4	N	184	BABCOCK & WILCOX LIMESTONE	9/78
SOUTHERN INDIANA GAS & ELEC A. B. BROWN 1	N	250	FMC CORPORATION DOUBLE ALKALI	4/79
SOUTHERN MISSISSIPPI ELECTRIC R. D. MORROW 2	N	180	RILEY STOKER / ENVIRONEERING LIMESTONE	1/79
ST. JOE ZINC G. F. WEATON 1	R	60	BUREAU OF MINES CITRATE	12/78
TENNESSEE VALLEY AUTHORITY WIDOWS CREEK 7	R	575	COMBUSTION ENGINEERING LIMESTONE	10/80
TEXAS UTILITIES MARTIN LAKE 3	N	793	RESEARCH COTTRELL LIMESTONE	12/78
UTAH POWER & LIGHT EMERY 1	N	400	CHEMICO LIME	12/78

SECTION 11
SUMMARY OF PLANNED FGD SYSTEMS

UTILITY COMPANY POWER STATION	NEW OR RETROFIT	SIZE OF FGD UNIT (MW)	VENDOR/PROCESS	START-UP DATE
CONTRACTS AWARDED				
ARIZONA PUBLIC SERVICE FOUR CORNERS 4	R	755	UNITED ENGINEERS NOT SELECTED	0/82
ARIZONA PUBLIC SERVICE FOUR CORNERS 5	R	755	UNITED ENGINEERS NOT SELECTED	0/82
ASSOCIATED ELECTRIC COOP THOMAS HILL 3	N	670	PULLMAN KELLOGG LIMESTONE	1/82
BASIN ELECTRIC POWER COOP ANTELOPE VALLEY 1	N	455	NOT SELECTED LIME	11/81
CINCINNATI GAS & ELECTRIC EAST BEND 2	N	600	BABCOCK & WILCOX LIME	1/81
EASTERN KENTUCKY POWER COOP SPURLOCK 2	N	500	COMBUSTION ENGINEERING LIME	3/80
LAKELAND UTILITIES MCINTOSH 3	N	350	BABCOCK & WILCOX LIMESTONE	10/81
LOUISVILLE GAS & ELECTRIC MILL CREEK 2	R	330	COMBUSTION ENGINEERING LIME/LIMESTONE	1/82
MONTANA POWER COLSTRIP 3	N	700	ADL/COMBUSTION EQUIP ASSOCIATE LIME/ALKALINE FLYASH	7/80
MONTANA POWER COLSTRIP 4	N	700	ADL/COMBUSTION EQUIP ASSOCIATE LIME/ALKALINE FLYASH	7/81
NIAGARA MOHAWK POWER COOP CHARLES R. HUNTLEY 6	R	100	ATOMICS INTERNATIONAL AQUEOUS CARBONATE	0/80
NORTHERN STATES POWER SHERBURNE 3	N	860	COMBUSTION ENGINEERING LIMESTONE/ALKALINE FLYASH	5/84
NORTHERN STATES POWER SHERBURNE 4	N	860	COMBUSTION ENGINEERING LIMESTONE/ALKALINE FLYASH	0/87
PUBLIC SERVICE OF NEW MEXICO SAN JUAN 3	N	468	DAVY POWERGAS WELLMAN LORD	6/79
PUBLIC SERVICE OF NEW MEXICO SAN JUAN 4	N	472	DAVY POWERGAS WELLMAN LORD	1/82
SOUTH CAROLINA PUBLIC SERVICE WINYAH 3	N	300	BABCOCK & WILCOX LIMESTONE	5/80
SOUTHWESTERN ELECTRIC POWER HENRY W. PERKEY 1		720	AIR CORRECTION DIVISION, UOP LIMESTONE	2/84
SPRINGFIELD WATER LIGHT & PWR DALLMAN 3	N	190	RESEARCH COTTRELL LIMESTONE	7/80
TEXAS MUNICIPAL POWER AGENCY GIBBONS CREEK 1	N	400	COMBUSTION ENGINEERING LIMESTONE	1/82
TEXAS POWER & LIGHT SANDOW 4	N	545	COMBUSTION ENGINEERING LIMESTONE	7/80
TEXAS UTILITIES MARTIN LAKE 4	N	793	RESEARCH COTTRELL LIMESTONE	11/82
UTAH POWER & LIGHT EMERY 2	N	400	CHEMICO LIME	6/80
WISCONSIN POWER & LIGHT COLUMBIA 2	N	527	CHEMICO LIME/ALKALINE FLYASH	1/80

SECTION 11
SUMMARY OF PLANNED FGD SYSTEMS

UTILITY COMPANY POWER STATION	NEW OR RETROFIT	SIZE OF FGD UNIT (MW)	VENDOR/PROCESS	START-UP DATE
LETTER OF INTENT SIGNED				
PHILADELPHIA ELECTRIC EDDYSTONE 1B	R	240	UNITED ENGINEERS MAGNESIUM OXIDE	6/80
REQUESTING/EVALUATING BIDS				
BASIN ELECTRIC POWER COOP LARAMIE RIVER 3	N	550	NOT SELECTED NOT SELECTED	4/82
CENTRAL ILLINOIS LIGHT DUCK CREEK 2	N	400	NOT SELECTED NOT SELECTED	1/82
PUBLIC SERVICE OF INDIANA GIBSON 5	N	650	NOT SELECTED NOT SELECTED	0/82
TEXAS UTILITIES FOREST GROVE 1	N	750	NOT SELECTED NOT SELECTED	0/81
CONSIDERING FGD SYSTEM				
ARIZONA PUBLIC SERVICE FOUR CORNERS 1	R	175	CHEMICO/APS LIME/ALKALINE FLYASH	0/79
ARIZONA PUBLIC SERVICE FOUR CORNERS 2	R	175	CHEMICO/APS LIME/ALKALINE FLYASH	0/79
ARIZONA PUBLIC SERVICE FOUR CORNERS 3	R	229	CHEMICO/APS LIME/ALKALINE FLYASH	0/79
BASIN ELECTRIC POWER COOP ANTELOPE VALLEY 2	N	455	NOT SELECTED NOT SELECTED	11/83
CENTRAL MAINE POWER SEARS ISLAND 1	N	600	NOT SELECTED NOT SELECTED	11/86
COLUMBUS & SOUTHERN OHIO ELEC. POSTON 5	N	375	NOT SELECTED NOT SELECTED	0/83
COLUMBUS & SOUTHERN OHIO ELEC. POSTON 6	N	375	NOT SELECTED NOT SELECTED	0/85
GENERAL PUBLIC UTILITIES CONO 1	N	800	NOT SELECTED NOT SELECTED	5/87
GENERAL PUBLIC UTILITIES SEWARD 7	N	800	NOT SELECTED NOT SELECTED	5/84
NEVADA POWER HARRY ALLEN 1	N	500	NOT SELECTED NOT SELECTED	6/85
NEVADA POWER HARRY ALLEN 2	N	500	NOT SELECTED NOT SELECTED	6/86
NEVADA POWER HARRY ALLEN 3	N	500	NOT SELECTED NOT SELECTED	6/87
NEVADA POWER HARRY ALLEN 4	N	500	NOT SELECTED NOT SELECTED	6/88
NEVADA POWER REID GARDNER 4	N	250	NOT SELECTED NOT SELECTED	0/83
NEVADA POWER WARNER VALLEY 1	N	250	NOT SELECTED NOT SELECTED	6/84
NEVADA POWER WARNER VALLEY 2	N	250	NOT SELECTED NOT SELECTED	6/85

SECTION 11
SUMMARY OF PLANNED FGD SYSTEMS

UTILITY COMPANY POWER STATION	NEW OR RETROFIT	SIZE OF FGD UNIT (MW)	VENDOR/PROCESS	START-UP DATE
NORTHERN INDIANA PUB SERVICE BAILLY 7	R	190	NOT SELECTED NOT SELECTED	0/ 0
NORTHERN INDIANA PUB SERVICE BAILLY 8	R	400	NOT SELECTED NOT SELECTED	0/ 0
PACIFIC GAS AND ELECTRIC FOSSIL 1	N	800	NOT SELECTED LIMESTONE	0/85
PACIFIC GAS AND ELECTRIC FOSSIL 2	N	800	NOT SELECTED LIMESTONE	0/86
PHILADELPHIA ELECTRIC CROMBY	R	150	UNITED ENGINEERS MAGNESIUM OXIDE	6/80
PHILADELPHIA ELECTRIC EDDYSTONE 2	R	336	UNITED ENGINEERS MAGNESIUM OXIDE	6/80
SALT RIVER PROJECT CORONADO 3	N	350	NOT SELECTED LIMESTONE	0/87
SEMINOLE ELECTRIC SEMINOLE 1	N	600	NOT SELECTED LIMESTONE	6/83
SOUTHERN ILLINOIS POWER COOP MARION 5	N	300	NOT SELECTED NOT SELECTED	0/84
TEXAS POWER & LIGHT TWIN OAKS 1	N	750	NOT SELECTED LIMESTONE	8/83
TEXAS POWER & LIGHT TWIN OAKS 2	N	750	NOT SELECTED LIMESTONE	9/84

SECTION 13

TOTAL FGD MEGAWATT CAPACITY BY YEAR *

YEAR	NO. UNITS	MEGAWATTS
1968	1	125
1971	1	400
1972	4	220
1973	4	1410
1974	2	250
1975	4	1054
1976	6	2313
1977	10	4921
1978	19	7075
1979	18	6626
1980	24	10348
1981	9	4310
1982	12	6795
1983	5	2430
1984	6	3680
1985	4	1925
1986	3	1900
1987	4	2510
1988	1	500
UNDEFINED	2	590

* TOTALS DISPLAYED DO NOT INCLUDE TERMINATED OR INACTIVE SYSTEMS.

APPENDIX A

FGD SYSTEMS ECONOMICS

INTRODUCTION

The cost of flue gas desulfurization (FGD) systems for the control of sulfur dioxide emissions is an area of intense interest and substantial controversy. As a result, many computer models have recently been developed to estimate capital and annual costs. As part of an effort by the U.S. Environmental Protection Agency to provide meaningful economic data concerning FGD systems, reported economic data have been incorporated into the EPA Utility FGD Survey report. This information has appeared as a separate appendix of the report since October 1976. Until January 1978, this cost appendix consisted entirely of data reported by the utilities with little or no interpretation provided by PEDCo Environmental, Inc. Beginning with the May 1978 report, the format and content of the cost appendix were revised to include reported and adjusted costs for the operational FGD systems.

The rationale for including adjusted as well as reported costs stems primarily from the lack of comparability of the reported costs. Many of the reported cost figures, both capital and operating, are largely site-sensitive values that cannot be accurately compared because they refer to different FGD battery limits and different years in which the expenditures were made. As a result, an analysis of the cost data was made for the operational units since these systems offer the potential of having complete and accurate economic data. The adjustments were made to provide comparable, accurate cost data for the sulfur dioxide portion of the emission control system. This, in effect, will eliminate much of the confusion that exists concerning the reported data, and it will provide a common basis for the reported costs.

APPROACH

In March 1978, each utility having at least one operational FGD system was given a cost form containing all available cost information then in the PEDCo files. The utility was asked to verify the data and fill in any missing information called for on the form. A follow-up visit by the PEDCo Environmental staff was arranged to assist in data acquisition and to insure completeness and reliability of information. Results of the cost analysis were forwarded to each participating utility for final review and comment.

The cost data were treated solely to establish the accurate costs for FGD systems, on a common basis, not to critique the design or reasonableness of the costs reported by any utility. Adjustments focused primarily on the following items:

- All capital costs were adjusted to July 1, 1977, dollars using the Chemical Engineering Index. All capital costs, represented in dollars/kilowatt ($/kW), were expressed in terms of gross megawatts (MW). Actual costs were reported by utilities in dollar values for years 1970 to 1980. These values are represented in terms of the year of greatest capital expenditures.

- Gross unit capacity was used to express all FGD capital expenditures because the capital requirement of an FGD system is dependent on actual boiler size before derating for auxiliary and air quality control power requirements.

- Particulate control costs were deducted. Since the purpose of the study was to estimate the incremental cost for sulfur dioxide control, particulate control costs were deducted using either data contained in the cost breakdowns or as a percentage of the total direct cost (capital and annual). The percentage reduction varied depending upon system design and operation.

- The capital costs associated with the modification or installation of equipment not part of the FGD system but needed for its proper functioning, were included (e.g. - stack lining, modification to existing ductwork or fans, etc.).

- Indirect charges were adjusted to provide adequate funds for engineering, field expenses, legal expenses, insurance, interest during construction, allowance for startup, taxes, and contingency.

- All annual costs, represented in mills/kilowatt-hour (mills/kWh), were expressed in terms of net megawatts (MW).

- Net unit capacity was used to express all FGD annual expenditures because the annual cost requirement of an FGD system is dependent on the actual amount of kilowatt-hours (kWh) produced by the unit after derating for auxiliary and air quality control power requirements.

- All annual costs were adjusted to a common capacity factor (65 percent).

- Replacement power costs were not included since only a few utilities reported such costs and these were presented using a variety of methods.

- Sludge disposal costs were adjusted to reflect the costs of sulfur dioxide waste disposal only (i.e., excluding fly ash disposal) and to provide for disposal over the anticipated lifetime of the FGD system. This latter correction was necessary since several utilities reported costs for sludge disposal capacity that would last only a fraction of the FGD system life. The adjustments were based on a land cost of $2000/acre with a sludge depth of 50 ft in a clay-lined pond (clay is assumed to be available at the site).

- A 30-year life was assumed for all process and economic considerations for all new systems that were installed for the life of the unit. A 20-year life was assumed for all process and economic considerations for retro-

fit systems that were installed for the remaining portion of the life of the unit.*

- Regeneration and by-product recovery facility costs were added for those regenerable systems not reporting such costs.

To the extent possible, all cost adjustments were made using the previous assumptions developed by PEDCo Environmental. When cost data were inadequate, adjustments were made using process design data in conjunction with the previous cost assumptions. In some cases, no adjustments were possible because of insufficient data.

---

* The use of a 30-year service life for new units coincides with the conclusion of the National Power Survey of the Federal Power Commission which recognized this value as reasonable for steam-electric plants. A 20-year service life was assumed for all retrofit units even if the remaining life of the units is less than this value. Thus, two different rates are used and should be noted when making comparisons between new and retrofit systems.

DESCRIPTION OF COST ELEMENTS

Capital costs consist of direct costs, indirect costs, contingency costs, and other capital costs. Direct costs include the "bought-out" cost of the equipment, the cost of installation, and site development. Indirect costs include interest during construction, contractor's fees and expenses, engineering, legal expenses, taxes, insurance, allowance for start-up and shakedown, and spares. Contingency costs include those costs resulting from malfunctions, equipment alterations, and similar unforeseen sources. Other capital costs include the nondepreciable items of land and working capital.

Annual costs consist of direct costs, fixed costs, and overhead costs. Direct costs include the cost of raw materials, utilities, operating labor and supervision, and maintenance and repairs. Fixed costs include those of depreciation, interim replacement, insurance, taxes, and interest on borrowed capital. Overhead costs include those of plant and payroll expenses. The various capital and annual cost components are discussed and defined in greater detail in the following paragraphs.

The direct capital costs include the following elements:

- Equipment required for the FGD system. Table A-1 provides a summary of the major process equipment used in regenerable and nonregenerable systems.

- Installation of equipment, including foundations; steel work for support, buildings, piping and ducting for effluents, slurries, sludge, and make-up water, control panels, instrumentation, insulation of ducting, buildings, piping, and other equipment, painting and piling.

- Site development may include clearing and grading, construction of access roads and walkways, establishment of rail, barge, and/or truck facilities, and parking facilities.

TABLE A-1. MAJOR FGD SYSTEM EQUIPMENT SUMMARY

Category	Description
Material handling-raw materials	Equipment for the handling and transfer of raw materials includes unloading facilities, conveyors, storage areas and silos, vibrators, atmospheric emission control associated with these facilities, and related accessories.
Feed preparation-raw materials	Equipment for the preparation of raw material to produce a feed slurry consists of feed weighers, crushers, grinders, classifiers, ball mills, mixing tanks, pumps, agitators, and related accessories.
Sulfur dioxide absorption	Equipment for treating the flue gas includes absorbers, mist eliminators, hold tanks, agitators, circulating pumps, pond water return pumps, and related accessories.
Flue gas reheat	Equipment required includes air, steam, or hot water heaters, condensate tanks, pumps, soot blowers, fans, fuel storage facilities, gas bypass equipment, and related accessories.
Gas handling	Equipment to handle the boiler flue gas includes booster fans, ductwork, flue gas bypass system, turning vanes, supports, platforms, and related accessories.
Sludge disposal	Nonregenerable FGD systems require solids/water separation equipment such as clarifiers, vacuum filters, centrifuges, sludge fixation equipment, and related accessories.
Utilities	Equipment to supply power and water to the FGD equipment consists of switch-gear, breakers, transformers, piping, and related accessories.
By-product handling	Equipment for processing the by-product of regenerable FGD systems may include a rotary kiln, fluid bed dryer, conveyor, storage silo, vibrator, combustion equipment and oil storage tanks, waste heat boilers, hammer mills, evaporators, crystallizers, strippers, tanks, agitators, pumps, compressors, sulfuric acid absorber and cooling, mist eliminator, pumps, acid coolers, tanks, etc.

(continued)

TABLE A-1. (continued)

Category	Description
Regeneration	Equipment for regeneration of the absorbing medium of an FGD system may consist of reactor vessels, material handling system, storage, weigh feeder, conveyor, rotary kiln, fluid bed calciner, dust collector, storage silo, vibrator, combustion equipment and oil storage tanks, waste heat boiler, hammer mill, evaporators, crystallizers, strippers, tanks, agitators, pumps, compressors, sulfuric acid absorber and cooling, mist eliminator, pumps, acid coolers, tanks, etc.
Purge treatment	Equipment for the removal of purge material (e.g. sodium sulfate) includes refrigeration, pumps, tanks, crystallizer, centrifuge, dryer, dust collector, conveyors, storage, and related equipment.
Auxiliary	Equipment not directly related to the FGD system, but which may require design or modification to accommodate an FGD system may include such items as existing fans, ducts, or stack. If new fans, ducts, or stacks are added to improve boiler performance and accommodate the FGD system, the costs are prorated to the boiler and FGD system.

Indirect capital costs include the following elements:

- Interest accrued on borrowed capital during construction.

- Contractor's fee and expenses, including costs for field labor payroll; field office supervision; personnel; construction offices; temporary roadways; railroad trackage; maintenance and welding shops; parking lot; communications; temporary piping and electrical and sanitary facilities; safety security (fire, material, medical, etc.); construction tools and rental equipment; unloading and storage of materials; travel expenses; permits; licenses; taxes; insurance; overhead; legal liabilities; field testing of equipment; start-up; and labor relations.

- Engineering costs, including administrative, process, project, and general; design and related functions for specifications; bid analysis; special studies; cost analysis; accounting; reports; consultant fees; purchasing; procurement; travel expenses; living expenses; expediting; inspection; safety; communications; modeling; pilot plant studies (if required because of process design or application novelty); royalty payments during construction; training of plant personnel; field engineering; safety engineering; and consultant services.

- Legal expenses, including those for securing permits, rights-of-way, etc.

- Taxes, including sales, and excise taxes.

- Insurance covering liability for equipment in transit and at site; fire, casualty, injury, and death; damage to property; delay; and noncompliance.

- Allowance for start-up and shakedown includes the cost associated with system start-up.

- Spare parts including pumps, valves, controls, special piping and fittings, instruments, spray nozzles, and similar items.

Other capital costs include the following elements:

- Land required for the FGD process, waste disposal, regeneration facility, and storage.

- Working capital, including the total amount of money invested in raw materials and supplies in stock, finished products in stock, and unfinished products

in the process of being manufactured; accounts receivable; cash kept on hand for payment of operating expenses such as salaries, wages, and raw materials purchases; accounts payable; and taxes payable.

Annual cost of an FGD system includes the following direct, fixed and overhead charges:

- Direct Charges

  - Raw materials, including those required by the FGD process for sulfur dioxide control, absorbent regeneration, sludge treatment, sludge fixation, flocculants, etc.

  - Utilities, including water for slurries, cooling and cleaning; electricity for pumps, fans, valves, lighting controls, conveyors, and mixers; fuel for reheating of flue gases; and stream for processing.

  - Operating labor, including supervisory, skilled, and unskilled labor required to operate, monitor, and control the FGD process.

  - Maintenance and repairs, consisting of both manpower and materials to keep the unit operating efficiently. The function of maintenance is both preventive and corrective to keep outages to a minimum.

  - Byproduct Sales: credit from the sale of byproducts regenerable FGD processes (e.g. sulfur, sulfuric acid) is a negative charge deducted from the annual direct cost to obtain the net annual direct cost of the FGD system.

- Fixed Charges

  - Depreciation - the annual charge to recover direct and indirect costs of physical assets over the life of the asset.

  - Interim, replacement - costs expended for temporary or provisional replacement of equipment that has failed or malfunctioned prematurely.

  - Insurance, including the costs of protection from loss by a specified contingency, peril, or unforeseen event. Required coverage could include losses due to fire, personal injury or death, property damage, explosion, lightning, or other natural phenomena.

- Taxes, including franchise, excise, and property taxes levied by a city, county, state, or Federal government.

- Interest on borrowed funds.

- Overhead

  Plant and administrative overhead is a business expense that is not charged directly to a particular part of a project, but is allocated to it. Overhead costs include administrative, safety, engineering, legal and medical services; payroll; employee benefits; recreation; and public relations.

Table A-2 provides a summary of the means used to determine the missing cost elements if the costs were not reported or insufficient information prevented their actual determination. The assumptions and cost bases for determining the capital and annual costs of FGD systems were developed by the PEDCo staff based upon previous economic studies conducted for the U.S. EPA (Flue Gas Desulfurization Process Cost Assessment, May 1975; Simplified Procedures for Estimating Flue Gas Desulfurization System Costs, June 1976, EPA-600/2-76-150; Particulate and Sulfur Dioxide Emission Control Costs for Large Coal-Fired Boilers, March 1978, EPA-600/7-78-032).

TABLE A-2. COST ELEMENT FACTORS

Category	Value
Indirect capital costs:	
Interest during construction	10% of total direct capital costs
Field overhead	10% of total direct capital costs
Contractor's fee and expenses	5% of total direct capital costs
Engineering	10% of total direct capital costs
Taxes	2% of total direct capital costs
Spares	1% of total direct capital costs
Shakedown allowance	5% of total direct capital costs
Other capital costs:	
Contingency[a]	20% of total direct and indirect capital costs
Direct annual costs:	
Raw materials:	
Fixation chemicals	$2/ton
Lime	$40/ton
Limestone	$10/ton
Magnesium oxide	$150/ton
Sodium carbonate	$80/ton
Salt cake (credit)	$50/ton
Sulfur (credit)	$65/ton
Sulfuric acid (credit)	$25/ton
Utilities:	
Electricity	25 mills/kWh
Water	$0.20/$10^3$ gal
Steam	$0.80/$10^6$ Btu
Operating labor:	
Direct labor	$8.50/man-hour
Supervision	15% of direct labor costs

[a] Contingency costs are used only when the cost data supplied are incomplete (such as equipment costs or direct costs only) and a contingency cost must be factored in to give an accurate estimate of the total capital cost.

(continued)

TABLE A-2. (continued)

Category	Value
Maintenance:	
Labor and materials	4% of total direct capital costs
Supplies	15% of labor and materials costs
Overhead:	
Plant	50% of operation and maintenance costs
Payroll	20% of operating labor costs
Fixed annual costs:	
Depreciation	3.33% or 5% (new or retrofit)
Interim replacement[b]	0.7% or 0.35%
Taxes	4%
Insurance	0.3%
Capital costs	9%

[b] Some system components have life spans less than the expected service life of the system. Interim replacement is an allowance factor used in estimating annual revenue requirements to provide for the replacement of these short-lived items. An average allowance of 0.35% of the total investment is normally provided and used for systems with an expected service life of 20 years or less. A higher allowance of 0.70% of the total investment is provided and used for systems with an expected service life of 30 years or more.

DEFINITION OF COST ELEMENTS

The costs displayed in Appendix A are accompanied by a series of alphabetic characters summarizing data presented for each FGD system. These relate to the cost elements described earlier in this section and identify what has been included and excluded for reported and adjusted capital and annual costs. The alphabetic characters, along with their titles, are briefly described in Table A-3.

TABLE A-3. DESCRIPTION OF COST

Code	Title	Description
A	Particulate control (required for FGD process) included in capital cost.	Particulate precollection device (ESP, fabric filter, venturi) prior to FGD system required for proper operation of SO_2 control system.
B	Particulate control (included in FGD process) included in capital cost.	Particulate collection equipment (venturi scrubber) is included in the FGD system.
C	Total direct capital costs included.	Complete cost of all FGD equipment, the labor and materials required for equipment installation, and interconnecting the system is included in the total capital cost.
D	Partial direct capital costs included.	One or a number of direct cost items, or the cost associated with one or a number of direct cost items, are excluded from the total capital cost.
E	Total indirect capital costs included.	Complete cost of all the indirect cost elements, including interest during construction, contractor's fees, engineering, legal expenses, taxes, insurance, allowance for start-up, and spares, is included in total capital cost.
F	Partial indirect costs included.	One or a number of indirect cost items, or the cost associated with one or a number of indirect cost items, are excluded from the total capital cost.
G	Chemical fixation of sludge included in capital cost.	The cost of a chemical fixation process which stabilizes the flue gas cleaning wastes prior to disposal is included in the total capital cost.
H	Dry sludge disposal included in capital cost.	The cost of a secondary dewatering or treatment method, such as filtration, centrifugation, or forced oxidation, which ultimately produces a dry sludge cake for final disposal, is included in the total capital cost.
I	Off-site landfill area included in capital cost.	The cost of an off-site area used as a landfill for flue gas cleaning wastes is included in the total capital cost.
J	Sludge pond included in capital cost.	The cost of an on-site disposal area for ponding of treated or untreated flue gas cleaning wastes is included in the total capital cost.
K	Additional sludge disposal capacity added for life of system.	The cost of additional SO_2 waste disposal capacity required for FGD system operation over the anticipated service life of the unit is included in the total capital cost.
L	Stack included in capital cost.	The cost of the stack is included in the total capital cost.
M	Modifications to stack, ducts, and/or fans included in capital cost.	Modifications to existing equipment (stack, fans, ducts, etc.) which are required because of inclusion of an FGD system.
N	Total regeneration facility cost included in capital cost.	Complete cost of entire regeneration facility included in total capital cost.
O	Partial regeneration facility cost included in capital cost.	Part of the cost associated with the regeneration facility included in the total capital cost.
P	R & D costs included in capital cost.	Bench scale or pilot plant studies to determine process and design characteristics.

(continued)

TABLE A-3. (continued)

Code	Title	Description
Q	Costs underwritten by system supplier included in capital cost.	Capital expenditures underwritten by the system supplier for system repairs or modifications for optimization of performance or R & D programs.
R	Excess reagent supply costs included in capital cost.	Capital expenditures for reagent supply exceeds the amount required for the period of initial operation.
S	Total direct annual costs included.	Complete cost of all raw materials, utilities, operating labor and maintenance and repairs is included in the total annual cost.
T	Partial direct annual costs included.	One or a number of direct annual cost items, or the cost associated with one or a number of direct annual cost items, are excluded from the total annual cost.
U	Total fixed annual costs included.	Complete cost of all fixed cost elements, including depreciation, interim replacement, insurance, taxes, and interest, is included in the total annual cost.
V	Partial fixed annual costs included.	One or a number of fixed annual cost items, or the cost associated with one or a number of fixed annual cost items, are excluded from the total annual cost.
W	Overhead cost included in total annual cost.	Plant and payroll overhead costs are included in the total annual cost.
X	Particulate control costs included in direct annual cost.	The cost of operating particulate collection equipment included in the FGD system is included in the total annual cost.
Y	Sludge disposal service costs (contract) included in direct annual cost.	The treatment and disposal of flue gas cleaning wastes that are handled by an outside firm.
Z	Replacement energy costs included in total annual costs.	The cost of additional power-generating capacity required to compensate for power used by the FGD system.

RESULTS OF COST ANALYSIS

The results of the operational FGD system survey are summarized in Tables A-4 and A-5. Table A-4 summarizes the reported and adjusted capital and annual costs for all the operational FGD systems addressed in the survey. Table A-5 produces a summary of a categorical analysis of the reported and adjusted capital and annual costs for the operational FGD systems addressed in the survey. Included in this categorical analysis are the ranges, means, and standard deviation for all the various types and categories of FGD systems examined.

TABLE A-4. REPORTED AND ADJUSTED CAPITAL AND ANNUAL COSTS FOR OPERATIONAL FGD SYSTEMS*

	Reported		Adjusted	
	Capital $/kW	Annual mills/kWh	Capital $/kW	Annual mills/kWh
Cholla 1	52.0	2.19	56.0	2.58
Conesville 5	55.6	4.71	70.8	7.42
Elrama 1-4	113.5	8.62	127.2	7.81
Phillips 1-6	107.0	7.83	140.6	8.57
Petersburg 3[a]	99.5		100.6	6.56
Hawthorn 3-4	29.3	8.40	87.3	4.35
La Cygne 1	53.7	1.70	68.0	3.78
Green River 1-3	70.3	14.35	77.6	5.24
Cane Run 4	66.6	2.75	80.6	5.78
Cane Run 5[a]	62.4		67.5	5.56
Paddys Run 6[b]	52.9		76.5	6.51
M.R. Young 2[a]	86.0		93.1	5.16
Colstrip 1-2	77.1	0.27	77.3	4.06
Reid Gardner 1-2	42.9	2.10	60.9	3.20
Reid Gardner 3	113.6	2.10	107.9	4.38
D.H. Mitchell 11[c]				
Sherburne 1-2	49.3	1.99	71.5	2.77
B. Mansfield 1-2	120.7	13.18	102.2	7.67
Eddystone 1A[d]	156.8		233.3	
Winyah 2	47.5	1.61	66.5	2.92
Southwest 1[a]	77.3		117.7	6.17
Widows Creek 8	98.2	2.99	113.2	5.28

a Annual costs were not reported by the utility for this system because of the lack of meaningful data due to recent operating status.

b Annual costs were not reported by the utility for this system because of the lack of meaningful data due to peak load status of unit.

c Reported and adjusted cost data are being assembled by project participants.

d Annual cost data are being assembled by the utility.

* Newly operational units do not appear as cost data are currently being assembled.

TABLE A-5. CATEGORICAL RESULTS OF THE REPORTED AND ADJUSTED CAPITAL AND ANNUAL COSTS FOR OPERATIONAL FGD SYSTEMS

	Reported						Adjusted					
	Capital			Annual			Capital			Annual		
	Range, $/kW	Avg., $/kW	σ	Range, mills/kWh	Avg., mills/kWh	σ	Range, $/kW	Avg., $/kW	σ	Range, mills/kWh	Avg., mills/kWh	σ
All	27.0-156.8	77.6	32.2	0.27-14.35	4.77	4.32	56.0-233.3	95.8	40.1	2.58-9.54	5.53	2.09
New	47.5-120.7	78.0	26.8	0.27-13.18	3.65	4.41	66.5-117.7	87.6	18.9	2.77-7 67	5.13	1.79
Retrofit	27.0-156.8	77.2	37.8	2.10-14.35	5.74	4.28	56.0-233.3	103.4	52.5	2.58-9.54	5.92	2.38
Nonregen-erable	27.0-120.7	73.7	27.3	0.27-14.35	4.77	4.32	56.0-149.7	89.0	25.4	2.58-9.54	5.53	2.09
Regenerable	156.8	156.8					233.3	233.3				
Limestone	57.5-99.5	71.4	23.7	1.61-3.00	2.13	0.64	56.0-117.7	87.0	26.7	2.58-6.56	4.55	1.69
Lime	27.0-120.7	75.1	31.7	2.75-14.35	8.08	4.34	67.5-149.7	94.1	29.3	4.09-9.54	7.03	1.81
Alkaline/fly ash/limestone	49.3	49.3		1.99	1.99		71.5	71.5		2.77	2.77	
Alkaline fly ash/lime	77.1-86.0	81.6	6.3	0.27	0.27		77.3-93.1	85.2	11.2	4.06-5.55	4.81	1.05
Sodium carbonate	42.9-113.6	78.3	50.0	2.10	2.10		60.9-107.9	84.4	33.2	3.20-4.38	3.79	0.83
Magnesium oxide	156.8	156.8					2.33.3	233.3				

SECTION A-1 FGD SYSTEM ECONOMICS: OPERATIONAL SYSTEMS

REPORTED AND ADJUSTED COSTS

UTILITY STATION UNIT(S)	FGD MW	ELEMENTS INCLUDED IN CAPITAL AND ANNUAL COSTS		CAPACITY FACTOR %	TOTAL CAPITAL $/KW (YEAR)	ANNUAL - MILLS/KWH TOTAL	DIRECT (YEAR)	FIXED
ALABAMA ELECTRIC COOP TOMBIGBEE 2	255	C,E,J	REPORTED		69.5 (1978)			
			ADJUSTED					
ARIZONA ELECTRIC POWER COOP APACHE 2	200	B,C	REPORTED		5.3 (1978)			
			ADJUSTED					
ARIZONA PUBLIC SERVICE CHOLLA 1	126	B,C,E,S,U,X	REPORTED	85	52.0 (1973)	2.19	(1976)	
		C,E,K,S,U,W	ADJUSTED	65	56.0 (1977)	2.58	.48 (1977)	2.10
CENTRAL ILLINOIS LIGHT DUCK CREEK 1	400	C,F,J,M	REPORTED		93.3 (1978)	3.31	(1976)	
			ADJUSTED					
COLUMBUS & SOUTHERN OHIO ELEC. CONESVILLE 5	411	B,C,J,M,T,X ,Y	REPORTED	51	55.6 (1975)	4.71	4.71 (1977)	
		C,E,J,M,S,U ,W,Y	ADJUSTED	65	70.8 (1977)	7.42	5.06 (1977)	2.36

COST ELEMENTS

CAPITAL:

- A - PARTICULATE CONTROL (REQUIRED FOR FGD PROCESS) INCLUDED IN CAPITAL COST
- B - PARTICULATE CONTROL (INCLUDED IN FGD PROCESS) INCLUDED IN CAPITAL COST
- C - TOTAL DIRECT CAPITAL COSTS INCLUDED
- D - PARTIAL DIRECT CAPITAL COSTS INCLUDED
- E - TOTAL INDIRECT CAPITAL COSTS INCLUDED
- F - PARTIAL INDIRECT CAPITAL COSTS INCLUDED
- G - CHEMICAL FIXATION OF SLUDGE INCLUDED IN CAPITAL COST
- H - DRY SLUDGE DISPOSAL INCLUDED IN CAPITAL COST
- I - OFF-SITE LANDFILL AREA INCLUDED IN CAPITAL COST
- J - SLUDGE POND INCLUDED IN CAPITAL COST
- K - ADDITONAL SLUDGE DISPOSAL CAPACITY ADDED FOR LIFE OF SYSTEM
- L - STACK INCLUDED IN CAPITAL COST
- M - MODIFICATIONS TO STACK, DUCTS, AND/OR FANS INCLUDED IN CAPITAL COST
- N - TOTAL REGENERATION FACILITY COST INCLUDED IN CAPITAL COST
- O - PARTIAL REGENERATION FACILITY COST INCLUDED IN CAPITAL COST
- P - R & D COSTS INCLUDED IN CAPITAL COST
- Q - COSTS UNDERWRITTEN BY SYSTEM SUPPLIER INCLUDED IN CAPITAL COST
- R - EXCESS REAGENT SUPPLY COSTS INCLUDED IN CAPITAL COST

ANNUAL:

- S - TOTAL DIRECT ANNUAL COSTS INCLUDED
- T - PARTIAL DIRECT ANNUAL COSTS INCLUDED
- U - TOTAL FIXED ANNUAL COSTS INCLUDED
- V - PARTIAL FIXED ANNUAL COSTS INCLUDED
- W - OVERHEAD COSTS INCLUDED IN TOTAL ANNUAL COSTS
- X - PARTICULATE CONTROL COSTS INCLUDED IN DIRECT ANNUAL COSTS
- Y - SLUDGE DISPOSAL SERVICE COSTS (CONTRACT) INCLUDED IN DIRECT ANNUAL COSTS
- Z - REPLACEMENT ENERGY COSTS INCLUDED IN DIRECT ANNUAL COSTS

SECTION A-1 FGD SYSTEM ECONOMICS: OPERATIONAL SYSTEMS

REPORTED AND ADJUSTED COSTS

UTILITY STATION UNIT(S)	FGD MW	ELEMENTS INCLUDED IN CAPITAL AND ANNUAL COSTS	CAPACITY FACTOR %	TOTAL CAPITAL $/KW (YEAR)	ANNUAL - MILLS/KWH TOTAL	DIRECT (YEAR)	FIXED
COLUMBUS & SOUTHERN OHIO ELEC. CONESVILLE 6	411	H,C,J,M,T,X ,Y	********** REPORTED **********				
			51	55.6 (1975)			
		C,F,J,M,S,U ,W,Y	********** ADJUSTED **********				
			65	70.8 (1977)			
DUQUESNE LIGHT ELRAMA POWER STATION	510	B,D,F,I,J,M ,T,V,X,Y	********** REPORTED **********				
			64	113.5 (1976)	5.31	2.82 (1977)	2.49
		C,E,I,J,M,S ,U,Y	********** ADJUSTED **********				
			65	127.2 (1977)	7.81	3.36 (1977)	4.45
DUQUESNE LIGHT PHILLIPS POWER STATION	410	B,D,F,I,J,M ,T,V,X,Y	********** REPORTED **********				
			70	107.0 (1972)	7.83	3.69 (1977)	4.14
		C,E,I,J,M,S ,U,Y	********** ADJUSTED **********				
			65	140.6 (1977)	8.57	3.58 (1977)	4.99
INDIANAPOLIS POWER & LIGHT PETERSBURG 3	532	C,F,G,J,M	********** REPORTED **********				
				99.5 (1976)			
		C,E,G,J,M,S ,U,W,Y	********** ADJUSTED **********				
			65	100.6 (1977)	6.56	3.57 (1977)	2.99
KANSAS CITY POWER & LIGHT HAWTHORN 3	110	B,D,F,T,X	********** REPORTED **********				
			14	29.3 (1972)	8.40	(1977)	
		B,C,E,J,K,S ,U,W,X	********** ADJUSTED **********				
			65	87.3 (1977)	4.35	2.93 (1977)	1.42

COST ELEMENTS

CAPITAL:

- A - PARTICULATE CONTROL (REQUIRED FOR FGD PROCESS) INCLUDED IN CAPITAL COST
- B - PARTICULATE CONTROL (INCLUDED IN FGD PROCESS) INCLUDED IN CAPITAL COST
- C - TOTAL DIRECT CAPITAL COSTS INCLUDED
- D - PARTIAL DIRECT CAPITAL COSTS INCLUDED
- E - TOTAL INDIRECT CAPITAL COSTS INCLUDED
- F - PARTIAL INDIRECT CAPITAL COSTS INCLUDED
- G - CHEMICAL FIXATION OF SLUDGE INCLUDED IN CAPITAL COST
- H - DRY SLUDGE DISPOSAL INCLUDED IN CAPITAL COST
- I - OFF-SITE LANDFILL AREA INCLUDED IN CAPITAL COST
- J - SLUDGE POND INCLUDED IN CAPITAL COST
- K - ADDITONAL SLUDGE DISPOSAL CAPACITY ADDED FOR LIFE OF SYSTEM
- L - STACK INCLUDED IN CAPITAL COST
- M - MODIFICATIONS TO STACK, DUCTS, AND/OR FANS INCLUDED IN CAPITAL COST
- N - TOTAL REGENERATION FACILITY COST INCLUDED IN CAPITAL COST
- O - PARTIAL REGENERATION FACILITY COST INCLUDED IN CAPITAL COST
- P - R & D COSTS INCLUDED IN CAPITAL COST
- Q - COSTS UNDERWRITTEN BY SYSTEM SUPPLIER INCLUDED IN CAPITAL COST
- R - EXCESS REAGENT SUPPLY COSTS INCLUDED IN CAPITAL COST

ANNUAL:

- S - TOTAL DIRECT ANNUAL COSTS INCLUDED
- T - PARTIAL DIRECT ANNUAL COSTS INCLUDED
- U - TOTAL FIXED ANNUAL COSTS INCLUDED
- V - PARTIAL FIXED ANNUAL COSTS INCLUDED
- W - OVERHEAD COSTS INCLUDED IN TOTAL ANNUAL COSTS
- X - PARTICULATE CONTROL COSTS INCLUDED IN DIRECT ANNUAL COSTS
- Y - SLUDGE DISPOSAL SERVICE COSTS (CONTRACT) INCLUDED IN DIRECT ANNUAL COSTS
- Z - REPLACEMENT ENERGY COSTS INCLUDED IN DIRECT ANNUAL COSTS

SECTION A-1 FGD SYSTEM ECONOMICS: OPERATIONAL SYSTEMS

REPORTED AND ADJUSTED COSTS

UTILITY STATION UNIT(S)	FGD MW	ELEMENTS INCLUDED IN CAPITAL AND ANNUAL COSTS	CAPACITY FACTOR %	TOTAL CAPITAL $/KW (YEAR)	ANNUAL - MILLS/KWH TOTAL	DIRECT (YEAR)	FIXED
KANSAS CITY POWER & LIGHT HAWTHORN 4	110	B,D,F,T,X	********** REPORTED **********				
			14	29.3 (1972)	8.40	(1977)	
		B,C,E,J,K,S ,U,W,X	********** ADJUSTED **********				
			65	87.3 (1977)	4.35	2.93 (1977)	1.42
KANSAS CITY POWER & LIGHT LA CYGNE 1	874	B,C,E,J,S	********** REPORTED **********				
			30	53.7 (1972)	1.70	1.70 (1977)	
		C,E,J,K,S,U	********** ADJUSTED **********				
			65	68.0 (1977)	3.78	1.70 (1977)	2.08
KENTUCKY UTILITIES GREEN RIVER 1,2 & 3	64	B,C,E,J,S,U ,W	********** REPORTED **********				
			16	70.3 (1975)	14.35	5.06 (1977)	9.29
		C,E,J,S,U,W	********** ADJUSTED **********				
			65	77.6 (1977)	5.24	2.71 (1977)	2.53
LOUISVILLE GAS & ELECTRIC CANE RUN 4	190	C,E,H,J,Q,T	********** REPORTED **********				
			55	66.6 (1975)	2.75	(1977)	
		C,E,H,J,K,Q ,S,U,W	********** ADJUSTED **********				
			65	80.6 (1977)	5.78	3.62 (1977)	2.16
LOUISVILLE GAS & ELECTRIC CANE RUN 5	200	C,E,H,J	********** REPORTED **********				
				62.4 (1977)			
		C,E,H,J,K,S ,U,W	********** ADJUSTED **********				
			65	67.5 (1977)	5.56	3.47 (1977)	2.09

COST ELEMENTS

CAPITAL:

- A - PARTICULATE CONTROL (REQUIRED FOR FGD PROCESS) INCLUDED IN CAPITAL COST
- B - PARTICULATE CONTROL (INCLUDED IN FGD PROCESS) INCLUDED IN CAPITAL COST
- C - TOTAL DIRECT CAPITAL COSTS INCLUDED
- D - PARTIAL DIRECT CAPITAL COSTS INCLUDED
- E - TOTAL INDIRECT CAPITAL COSTS INCLUDED
- F - PARTIAL INDIRECT CAPITAL COSTS INCLUDED
- G - CHEMICAL FIXATION OF SLUDGE INCLUDED IN CAPITAL COST
- H - DRY SLUDGE DISPOSAL INCLUDED IN CAPITAL COST
- I - OFF-SITE LANDFILL AREA INCLUDED IN CAPITAL COST
- J - SLUDGE POND INCLUDED IN CAPITAL COST
- K - ADDITONAL SLUDGE DISPOSAL CAPACITY ADDED FOR LIFE OF SYSTEM
- L - STACK INCLUDED IN CAPITAL COST
- M - MODIFICATIONS TO STACK, DUCTS, AND/OR FANS INCLUDED IN CAPITAL COST
- N - TOTAL REGENERATION FACILITY COST INCLUDED IN CAPITAL COST
- O - PARTIAL REGENERATION FACILITY COST INCLUDED IN CAPITAL COST
- P - R & D COSTS INCLUDED IN CAPITAL COST
- Q - COSTS UNDERWRITTEN BY SYSTEM SUPPLIER INCLUDED IN CAPITAL COST
- R - EXCESS REAGENT SUPPLY COSTS INCLUDED IN CAPITAL COST

ANNUAL:

- S - TOTAL DIRECT ANNUAL COSTS INCLUDED
- T - PARTIAL DIRECT ANNUAL COSTS INCLUDED
- U - TOTAL FIXED ANNUAL COSTS INCLUDED
- V - PARTIAL FIXED ANNUAL COSTS INCLUDED
- W - OVERHEAD COSTS INCLUDED IN TOTAL ANNUAL COSTS
- X - PARTICULATE CONTROL COSTS INCLUDED IN DIRECT ANNUAL COSTS
- Y - SLUDGE DISPOSAL SERVICE COSTS (CONTRACT) INCLUDED IN DIRECT ANNUAL COSTS
- Z - REPLACEMENT ENERGY COSTS INCLUDED IN DIRECT ANNUAL COSTS

SECTION A-1 FGD SYSTEM ECONOMICS: OPERATIONAL SYSTEMS

REPORTED AND ADJUSTED COSTS

UTILITY STATION UNIT(S)	FGD MW	ELEMENTS INCLUDED IN CAPITAL AND ANNUAL COSTS	CAPACITY FACTOR %	TOTAL CAPITAL $/KW (YEAR)	ANNUAL - MILLS/KWH TOTAL	DIRECT (YEAR)	FIXED
LOUISVILLE GAS & ELECTRIC PADDYS RUN 6	70	C,F	********** REPORTED **********	52.9 (1973)			
		C,F,S,U,W	********** ADJUSTED ********** 65	76.5 (1977)	6.51	3.92 (1977)	2.59
MINNKOTA POWER COOPERATIVE MILTON R. YOUNG 2	477	C,F,H,P	********** REPORTED **********	86.0 (1976)			
		C,E,H,M,P,S ,U,W	********** ADJUSTED ********** 65	93.1 (1977)	5.55	2.24 (1977)	3.31
MONTANA POWER COLSTRIP 1	330	B,C,E,J,P,T	********** REPORTED ********** 76	77.1 (1975)	.27	.27 (1977)	
		C,E,J,K,P,S ,U,W	********** ADJUSTED ********** 65	77.3 (1977)	4.06	1.51 (1977)	2.55
MONTANA POWER COLSTRIP 2	330	B,C,E,J,P,T	********** REPORTED ********** 76	77.1 (1975)	.27	.27 (1977)	
		C,F,J,K,P,S ,U,W	********** ADJUSTED ********** 65	77.3 (1977)	4.06	1.51 (1977)	2.55
NEVADA POWER REID GARDNER 1	125	B,D,E,P,S,U ,W,X	********** REPORTED ********** 67	42.9 (1973)	2.10	1.30 (1977)	.80
		B,C,E,J,P,S ,U,W,X	********** ADJUSTED ********** 65	60.9 (1977)	3.20	1.30 (1977)	1.90

COST ELEMENTS

CAPITAL:

- A - PARTICULATE CONTROL (REQUIRED FOR FGD PROCESS) INCLUDED IN CAPITAL COST
- B - PARTICULATE CONTROL (INCLUDED IN FGD PROCESS) INCLUDED IN CAPITAL COST
- C - TOTAL DIRECT CAPITAL COSTS INCLUDED
- D - PARTIAL DIRECT CAPITAL COSTS INCLUDED
- E - TOTAL INDIRECT CAPITAL COSTS INCLUDED
- F - PARTIAL INDIRECT CAPITAL COSTS INCLUDED
- G - CHEMICAL FIXATION OF SLUDGE INCLUDED IN CAPITAL COST
- H - DRY SLUDGE DISPOSAL INCLUDED IN CAPITAL COST
- I - OFF-SITE LANDFILL AREA INCLUDED IN CAPITAL COST
- J - SLUDGE POND INCLUDED IN CAPITAL COST
- K - ADDITONAL SLUDGE DISPOSAL CAPACITY ADDED FOR LIFE OF SYSTEM
- L - STACK INCLUDED IN CAPITAL COST
- M - MODIFICATIONS TO STACK, DUCTS, AND/OR FANS INCLUDED IN CAPITAL COST
- N - TOTAL REGENERATION FACILITY COST INCLUDED IN CAPITAL COST
- O - PARTIAL REGENERATION FACILITY COST INCLUDED IN CAPITAL COST
- P - R & D COSTS INCLUDED IN CAPITAL COST
- Q - COSTS UNDERWRITTEN BY SYSTEM SUPPLIER INCLUDED IN CAPITAL COST
- R - EXCESS REAGENT SUPPLY COSTS INCLUDED IN CAPITAL COST

ANNUAL:

- S - TOTAL DIRECT ANNUAL COSTS INCLUDED
- T - PARTIAL DIRECT ANNUAL COSTS INCLUDED
- U - TOTAL FIXED ANNUAL COSTS INCLUDED
- V - PARTIAL FIXED ANNUAL COSTS INCLUDED
- W - OVERHEAD COSTS INCLUDED IN TOTAL ANNUAL COSTS
- X - PARTICULATE CONTROL COSTS INCLUDED IN DIRECT ANNUAL COSTS
- Y - SLUDGE DISPOSAL SERVICE COSTS (CONTRACT) INCLUDED IN DIRECT ANNUAL COSTS
- Z - REPLACEMENT ENERGY COSTS INCLUDED IN DIRECT ANNUAL COSTS

SECTION A-1 FGD SYSTEM ECONOMICS: OPERATIONAL SYSTEMS

REPORTED AND ADJUSTED COSTS

UTILITY STATION UNIT(S)	FGD MW	ELEMENTS INCLUDED IN CAPITAL AND ANNUAL COSTS	CAPACITY FACTOR %	TOTAL CAPITAL $/KW (YEAR)	ANNUAL - MILLS/KWH TOTAL	DIRECT (YEAR)	FIXED
NEVADA POWER REID GARDNER 2	125	B,D,E,P,S,U ,W,X	********** REPORTED **********				
			67	42.9 (1973)	2.10	1.30 (1977)	.80
		B,C,E,J,P,S ,U,W,X	********** ADJUSTED **********				
			65	60.9 (1977)	5.20	1.30 (1977)	1.90
NEVADA POWER REID GARDNER 3	125	B,C,E,L,S,U ,W,X	********** REPORTED **********				
			67	115.6 (1975)	2.10	1.30 (1977)	.80
		B,C,E,S,U,W ,X	********** ADJUSTED **********				
			65	107.9 (1977)	4.38	1.30 (1977)	3.08
NORTHERN INDIANA PUB SERVICE DEAN H. MITCHELL 11	92		********** REPORTED **********				
			********** ADJUSTED **********				
NORTHERN STATES POWER SHERBURNE 1	720	B,C,J,S,U,X ,Z	********** REPORTED **********				
			73	49.3 (1972)	1.98	1.05 (1977)	.93
		C,E,J,K,S,U ,W	********** ADJUSTED **********				
			65	71.5 (1977)	2.77	.75 (1977)	2.02
NORTHERN STATES POWER SHERBURNE 2	720	B,C,J,S,U,X ,Z	********** REPORTED **********				
			73	49.3 (1972)	1.98	1.05 (1977)	.93
		C,E,J,K,S,U ,W	********** ADJUSTED **********				
			65	71.5 (1977)	2.77	.75 (1977)	2.02

COST ELEMENTS

CAPITAL:

- A - PARTICULATE CONTROL (REQUIRED FOR FGD PROCESS) INCLUDED IN CAPITAL COST
- B - PARTICULATE CONTROL (INCLUDED IN FGD PROCESS) INCLUDED IN CAPITAL COST
- C - TOTAL DIRECT CAPITAL COSTS INCLUDED
- D - PARTIAL DIRECT CAPITAL COSTS INCLUDED
- E - TOTAL INDIRECT CAPITAL COSTS INCLUDED
- F - PARTIAL INDIRECT CAPITAL COSTS INCLUDED
- G - CHEMICAL FIXATION OF SLUDGE INCLUDED IN CAPITAL COST
- H - DRY SLUDGE DISPOSAL INCLUDED IN CAPITAL COST
- I - OFF-SITE LANDFILL AREA INCLUDED IN CAPITAL COST
- J - SLUDGE POND INCLUDED IN CAPITAL COST
- K - ADDITONAL SLUDGE DISPOSAL CAPACITY ADDED FOR LIFE OF SYSTEM
- L - STACK INCLUDED IN CAPITAL COST
- M - MODIFICATIONS TO STACK, DUCTS, AND/OR FANS INCLUDED IN CAPITAL COST
- N - TOTAL REGENERATION FACILITY COST INCLUDED IN CAPITAL COST
- O - PARTIAL REGENERATION FACILITY COST INCLUDED IN CAPITAL COST
- P - R & D COSTS INCLUDED IN CAPITAL COST
- Q - COSTS UNDERWRITTEN BY SYSTEM SUPPLIER INCLUDED IN CAPITAL COST
- R - EXCESS REAGENT SUPPLY COSTS INCLUDED IN CAPITAL COST

ANNUAL:

- S - TOTAL DIRECT ANNUAL COSTS INCLUDED
- T - PARTIAL DIRECT ANNUAL COSTS INCLUDED
- U - TOTAL FIXED ANNUAL COSTS INCLUDED
- V - PARTIAL FIXED ANNUAL COSTS INCLUDED
- W - OVERHEAD COSTS INCLUDED IN TOTAL ANNUAL COSTS
- X - PARTICULATE CONTROL COSTS INCLUDED IN DIRECT ANNUAL COSTS
- Y - SLUDGE DISPOSAL SERVICE COSTS (CONTRACT) INCLUDED IN DIRECT ANNUAL COSTS
- Z - REPLACEMENT ENERGY COSTS INCLUDED IN DIRECT ANNUAL COSTS

SECTION A-1 FGD SYSTEM ECONOMICS: OPERATIONAL SYSTEMS

REPORTED AND ADJUSTED COSTS

UTILITY STATION UNIT(S)	FGD MW	ELEMENTS INCLUDED IN CAPITAL AND ANNUAL COSTS	CAPACITY FACTOR %	TOTAL CAPITAL $/KW (YEAR)	ANNUAL - MILLS/KWH TOTAL	DIRECT (YEAR)	FIXED
PENNSYLVANIA POWER BRUCE MANSFIELD 1	917	B,C,E,G,I,L ,S,U,W,X	********** REPORTED ********** 40	120.7 (1975)	13.18	4.08 (1977)	9.10
		C,E,G,I,W,S ,U,W	********** ADJUSTED ********** 65	102.2 (1977)	7.67	4.50 (1977)	3.17
PENNSYLVANIA POWER BRUCE MANSFIELD 2	917	B,C,E,G,I,L ,S,U,W,X	********** REPORTED ********** 40	120.7 (1975)	13.18	4.08 (1977)	9.10
		C,E,G,I,W,S ,U,W	********** ADJUSTED ********** 65	102.2 (1977)	7.67	4.50 (1977)	3.17
PHILADELPHIA ELECTRIC EDDYSTONE 1A	105	D,F,N,P	********** REPORTED **********	156.8 (1972)			
		C,F,N,P	********** ADJUSTED **********	233.5 (1977)			
PUBLIC SERVICE OF NEW MEXICO SAN JUAN 1	357	A,C,E,N	********** REPORTED **********	127.9 (1977)			
			********** ADJUSTED **********				
PUBLIC SERVICE OF NEW MEXICO SAN JUAN 2	357	A,C,E,N	********** REPORTED **********	127.9 (1977)			
			********** ADJUSTED **********				

COST ELEMENTS

CAPITAL:

- A - PARTICULATE CONTROL (REQUIRED FOR FGD PROCESS) INCLUDED IN CAPITAL COST
- B - PARTICULATE CONTROL (INCLUDED IN FGD PROCESS) INCLUDED IN CAPITAL COST
- C - TOTAL DIRECT CAPITAL COSTS INCLUDED
- D - PARTIAL DIRECT CAPITAL COSTS INCLUDED
- E - TOTAL INDIRECT CAPITAL COSTS INCLUDED
- F - PARTIAL INDIRECT CAPITAL COSTS INCLUDED
- G - CHEMICAL FIXATION OF SLUDGE INCLUDED IN CAPITAL COST
- H - DRY SLUDGE DISPOSAL INCLUDED IN CAPITAL COST
- I - OFF-SITE LANDFILL AREA INCLUDED IN CAPITAL COST
- J - SLUDGE POND INCLUDED IN CAPITAL COST
- K - ADDITONAL SLUDGE DISPOSAL CAPACITY ADDED FOR LIFE OF SYSTEM
- L - STACK INCLUDED IN CAPITAL COST
- M - MODIFICATIONS TO STACK, DUCTS, AND/OR FANS INCLUDED IN CAPITAL COST
- N - TOTAL REGENERATION FACILITY COST INCLUDED IN CAPITAL COST
- O - PARTIAL REGENERATION FACILITY COST INCLUDED IN CAPITAL COST
- P - R & D COSTS INCLUDED IN CAPITAL COST
- Q - COSTS UNDERWRITTEN BY SYSTEM SUPPLIER INCLUDED IN CAPITAL COST
- R - EXCESS REAGENT SUPPLY COSTS INCLUDED IN CAPITAL COST

ANNUAL:

- S - TOTAL DIRECT ANNUAL COSTS INCLUDED
- T - PARTIAL DIRECT ANNUAL COSTS INCLUDED
- U - TOTAL FIXED ANNUAL COSTS INCLUDED
- V - PARTIAL FIXED ANNUAL COSTS INCLUDED
- W - OVERHEAD COSTS INCLUDED IN TOTAL ANNUAL COSTS
- X - PARTICULATE CONTROL COSTS INCLUDED IN DIRECT ANNUAL COSTS
- Y - SLUDGE DISPOSAL SERVICE COSTS (CONTRACT) INCLUDED IN DIRECT ANNUAL COSTS
- Z - REPLACEMENT ENERGY COSTS INCLUDED IN DIRECT ANNUAL COSTS

SECTION A-1 FGD SYSTEM ECONOMICS: OPERATIONAL SYSTEMS

REPORTED AND ADJUSTED COSTS

UTILITY STATION UNIT(S)	FGD MW	ELEMENTS INCLUDED IN CAPITAL AND ANNUAL COSTS	CAPACITY FACTOR %	TOTAL CAPITAL $/KW (YEAR)	ANNUAL - MILLS/KWH TOTAL	DIRECT (YEAR)	FIXED
SOUTH CAROLINA PUBLIC SERVICE	140	C,F,J,M,S,V	********** REPORTED **********				
WINYAH			80	47.5	1.61	.88	.73
2				(1976)		(1977)	
		C,F	********** ADJUSTED **********				
				37.4			
				(1975)			
SOUTHERN MISSISSIPPI ELECTRIC	180		********** REPORTED **********				
R. D. MORROW							
1							
		C,E,J,K,M,S	********** ADJUSTED **********				
		,U,W	65	66.5	2.92	1.04	1.88
				(1977)		(1977)	
SPRINGFIELD CITY UTILITIES	194	C,F,H,J,P	********** REPORTED **********				
SOUTHWEST				77.5			
1				(1974)			
		C,F,H,J,K,P	********** ADJUSTED **********				
		,S,U,W	65	117.7	6.17	2.87	3.30
				(1977)		(1977)	
TENNESSEE VALLEY AUTHORITY	550	B,C,F,P,R,T	********** REPORTED **********				
WIDOWS CREEK		,U	60	98.2	2.99		
8				(1976)		(1977)	
		C,F,J,S,U,W	********** ADJUSTED **********				
			65	115.2	5.28	1.44	3.84
				(1977)		(1977)	
TEXAS UTILITIES	750		********** REPORTED **********				
MONTICELLO				25.0			
3				(1978)			
			********** ADJUSTED **********				

COST ELEMENTS

CAPITAL:

- A - PARTICULATE CONTROL (REQUIRED FOR FGD PROCESS) INCLUDED IN CAPITAL COST
- B - PARTICULATE CONTROL (INCLUDED IN FGD PROCESS) INCLUDED IN CAPITAL COST
- C - TOTAL DIRECT CAPITAL COSTS INCLUDED
- D - PARTIAL DIRECT CAPITAL COSTS INCLUDED
- E - TOTAL INDIRECT CAPITAL COSTS INCLUDED
- F - PARTIAL INDIRECT CAPITAL COSTS INCLUDED
- G - CHEMICAL FIXATION OF SLUDGE INCLUDED IN CAPITAL COST
- H - DRY SLUDGE DISPOSAL INCLUDED IN CAPITAL COST
- I - OFF-SITE LANDFILL AREA INCLUDED IN CAPITAL COST
- J - SLUDGE POND INCLUDED IN CAPITAL COST
- K - ADDITONAL SLUDGE DISPOSAL CAPACITY ADDED FOR LIFE OF SYSTEM
- L - STACK INCLUDED IN CAPITAL COST
- M - MODIFICATIONS TO STACK, DUCTS, AND/OR FANS INCLUDED IN CAPITAL COST
- N - TOTAL REGENERATION FACILITY COST INCLUDED IN CAPITAL COST
- O - PARTIAL REGENERATION FACILITY COST INCLUDED IN CAPITAL COST
- P - R & D COSTS INCLUDED IN CAPITAL COST
- Q - COSTS UNDERWRITTEN BY SYSTEM SUPPLIER INCLUDED IN CAPITAL COST
- R - EXCESS REAGENT SUPPLY COSTS INCLUDED IN CAPITAL COST

ANNUAL:

- S - TOTAL DIRECT ANNUAL COSTS INCLUDED
- T - PARTIAL DIRECT ANNUAL COSTS INCLUDED
- U - TOTAL FIXED ANNUAL COSTS INCLUDED
- V - PARTIAL FIXED ANNUAL COSTS INCLUDED
- W - OVERHEAD COSTS INCLUDED IN TOTAL ANNUAL COSTS
- X - PARTICULATE CONTROL COSTS INCLUDED IN DIRECT ANNUAL COSTS
- Y - SLUDGE DISPOSAL SERVICE COSTS (CONTRACT) INCLUDED IN DIRECT ANNUAL COSTS
- Z - REPLACEMENT ENERGY COSTS INCLUDED IN DIRECT ANNUAL COSTS

SECTION A-2 FGD SYSTEM ECONOMICS: NONOPERATIONAL SYSTEMS

REPORTED AND ADJUSTED COSTS

UTILITY STATION UNIT(S)	FGD MW	ELEMENTS INCLUDED IN CAPITAL AND ANNUAL COSTS	CAPACITY FACTOR %	TOTAL CAPITAL $/KW (YEAR)	ANNUAL - MILLS/KWH TOTAL	DIRECT (YEAR)	FIXED
ALABAMA ELECTRIC COOP TUMBIGBEE 3	255	C,F,J	********** REPORTED **********	69.5 (1978)			
ARIZONA ELECTRIC POWER COOP APACHE 3	200	H,C	********** REPORTED **********	5.3 (1978)			
BASIN ELECTRIC POWER COOP LARAMIE RIVER 1	550	C,F	********** REPORTED **********	68.2 (1980)			
BASIN ELECTRIC POWER COOP LARAMIE RIVER 2	550	C,F	********** REPORTED **********	68.2 (1980)			
BIG RIVERS ELECTRIC GREEN 1	250	H,C	********** REPORTED **********	45.2 (1976)			
BOSTON EDISON MYSTIC 6	155	B,C,E,N,O	********** REPORTED **********	65.4 (1972)	3.00	(1974)	
CENTRAL ILLINOIS PUBLIC SERV NEWTON 1	575	C,E,G	********** REPORTED **********	189.0 (1979)			
COLORADO UTE ELECTRIC ASSN. CRAIG 1	450	B,D,E	********** REPORTED **********	117.0 (1979)			

COST ELEMENTS

CAPITAL:

- A - PARTICULATE CONTROL (REQUIRED FOR FGD PROCESS) INCLUDED IN CAPITAL COST
- B - PARTICULATE CONTROL (INCLUDED IN FGD PROCESS) INCLUDED IN CAPITAL COST
- C - TOTAL DIRECT CAPITAL COSTS INCLUDED
- D - PARTIAL DIRECT CAPITAL COSTS INCLUDED
- E - TOTAL INDIRECT CAPITAL COSTS INCLUDED
- F - PARITAL INDIRECT CAPITAL COSTS INCLUDED
- G - CHEMICAL FIXATION OF SLUDGE INCLUDED IN CAPITAL COST
- H - DRY SLUDGE DISPOSAL INCLUDED IN CAPITAL COST
- I - OFF-SITE LANDFILL AREA INCLUDED IN CAPITAL COST
- J - SLUDGE POND INCLUDED IN CAPITAL COST
- K - ADDITONAL SLUDGE DISPOSAL CAPACITY ADDED FOR LIFE OF SYSTEM
- L - STACK INCLUDED IN CAPITAL COST
- M - MODIFICATIONS TO STACK, DUCTS, AND/OR FANS INCLUDED IN CAPITAL COST
- N - TOTAL REGENERATION FACILITY COST INCLUDED IN CAPITAL COST
- O - PARTIAL REGENERATION FACILITY COST INCLUDED IN CAPITAL COST
- P - R & D COSTS INCLUDED IN CAPITAL COST
- Q - COSTS UNDERWRITTEN BY SYSTEM SUPPLIER INCLUDED IN CAPITAL COST
- R - EXCESS REAGENT SUPPLY COSTS INCLUDED IN CAPITAL COST

ANNUAL:

- S - TOTAL DIRECT ANNUAL COSTS INCLUDED
- T - PARTIAL DIRECT ANNUAL COSTS INCLUDED
- U - TOTAL FIXED ANNUAL COSTS INCLUDED
- V - PARTIAL FIXED ANNUAL COSTS INCLUDED
- W - OVERHEAD COSTS INCLUDED IN TOTAL ANNUAL COSTS
- X - PARTICULATE CONTROL COSTS INCLUDED IN DIRECT ANNUAL COSTS
- Y - SLUDGE DISPOSAL SERVICE COSTS (CONTRACT) INCLUDED IN DIRECT ANNUAL COSTS
- Z - REPLACEMENT ENERGY COSTS INCLUDED IN DIRECT ANNUAL COSTS

SECTION A-2 FGD SYSTEM ECONOMICS: NONOPERATIONAL SYSTEMS

REPORTED AND ADJUSTED COSTS

UTILITY STATION UNIT(S)	FGD MW	ELEMENTS INCLUDED IN CAPITAL AND ANNUAL COSTS	CAPACITY FACTOR %	TOTAL CAPITAL $/KW (YEAR)	ANNUAL - MILLS/KWH TOTAL	DIRECT (YEAR)	FIXED
COLORADO UTE ELECTRIC ASSN. CRAIG 2	450	A,C	********** REPORTED **********	117.0 (1979)			
COMMONWEALTH EDISON POWERTON 51	425	C,E,H,J	********** REPORTED **********	117.7 (1979)			
COMMONWEALTH EDISON WILL COUNTY 1	167	B,C,E,G,J,X	********** REPORTED ********** 49	113.0 (1972)	13.06	(1975)	
DETROIT EDISON ST. CLAIR 6	163	B,C,E,J,M,X	********** REPORTED **********	80.3 (1976)	9.60	(1976)	
ILLINOIS POWER WOOD RIVER 4	110	A,C,E,M,N	********** REPORTED **********	82.5 (1972)			
LOUISVILLE GAS & ELECTRIC CANE RUN 6	277	C,E,H,M,S,V ,W	********** REPORTED **********	57.9 (1977)	3.24	1.92 (1979)	1.32
PACIFIC POWER & LIGHT JIM BRIDGER 4	509	C,E,J	********** REPORTED **********	120.0 (1979)			
POTOMAC ELECTRIC POWER DICKERSON 3	190	A,C,E,M	********** REPORTED **********	68.0 (1973)			

COST ELEMENTS

CAPITAL:

- A - PARTICULATE CONTROL (REQUIRED FOR FGD PROCESS) INCLUDED IN CAPITAL COST
- B - PARTICULATE CONTROL (INCLUDED IN FGD PROCESS) INCLUDED IN CAPITAL COST
- C - TOTAL DIRECT CAPITAL COSTS INCLUDED
- D - PARTIAL DIRECT CAPITAL COSTS INCLUDED
- E - TOTAL INDIRECT CAPITAL COSTS INCLUDED
- F - PARITAL INDIRECT CAPITAL COSTS INCLUDED
- G - CHEMICAL FIXATION OF SLUDGE INCLUDED IN CAPITAL COST
- H - DRY SLUDGE DISPOSAL INCLUDED IN CAPITAL COST
- I - OFF-SITE LANDFILL AREA INCLUDED IN CAPITAL COST
- J - SLUDGE POND INCLUDED IN CAPITAL COST
- K - ADDITONAL SLUDGE DISPOSAL CAPACITY ADDED FOR LIFE OF SYSTEM
- L - STACK INCLUDED IN CAPITAL COST
- M - MODIFICATIONS TO STACK, DUCTS, AND/OR FANS INCLUDED IN CAPITAL COST
- N - TOTAL REGENERATION FACILITY COST INCLUDED IN CAPITAL COST
- O - PARTIAL REGENERATION FACILITY COST INCLUDED IN CAPITAL COST
- P - R & D COSTS INCLUDED IN CAPITAL COST
- Q - COSTS UNDERWRITTEN BY SYSTEM SUPPLIER INCLUDED IN CAPITAL COST
- R - EXCESS REAGENT SUPPLY COSTS INCLUDED IN CAPITAL COST

ANNUAL:

- S - TOTAL DIRECT ANNUAL COSTS INCLUDED
- T - PARTIAL DIRECT ANNUAL COSTS INCLUDED
- U - TOTAL FIXED ANNUAL COSTS INCLUDED
- V - PARTIAL FIXED ANNUAL COSTS INCLUDED
- W - OVERHEAD COSTS INCLUDED IN TOTAL ANNUAL COSTS
- X - PARTICULATE CONTROL COSTS INCLUDED IN DIRECT ANNUAL COSTS
- Y - SLUDGE DISPOSAL SERVICE COSTS (CONTRACT) INCLUDED IN DIRECT ANNUAL COSTS
- Z - REPLACEMENT ENERGY COSTS INCLUDED IN DIRECT ANNUAL COSTS

SECTION A-2 FGD SYSTEM ECONOMICS: NONOPERATIONAL SYSTEMS

REPORTED AND ADJUSTED COSTS

UTILITY STATION UNIT(S)	FGD MW	ELEMENTS INCLUDED IN CAPITAL AND ANNUAL COSTS	CAPACITY FACTOR %	TOTAL CAPITAL $/KW (YEAR)	ANNUAL - MILLS/KWH TOTAL	DIRECT (YEAR)	FIXED
PUBLIC SERVICE OF COLORADO VALMONT 5	50	B,C,E,J	********** REPORTED **********	87.0 (1974)			
SALT RIVER PROJECT CORONADO 1	350	C,F	********** REPORTED **********	98.0 (1978)			
SALT RIVER PROJECT CORONADO 2	350	C,F	********** REPORTED **********	98.0 (1978)			
SOUTHERN INDIANA GAS & ELEC A. B. BROWN 1	250	C,E,G	********** REPORTED **********	45.2 (1979)			
SOUTHERN MISSISSIPPI ELECTRIC R. D. MORROW 2	180	C,F	********** REPORTED **********	37.4 (1975)			
WISCONSIN POWER & LIGHT COLUMBIA 2	527		********** REPORTED **********	57.0 (1980)			

COST ELEMENTS

CAPITAL:

- A - PARTICULATE CONTROL (REQUIRED FOR FGD PROCESS) INCLUDED IN CAPITAL COST
- B - PARTICULATE CONTROL (INCLUDED IN FGD PROCESS) INCLUDED IN CAPITAL COST
- C - TOTAL DIRECT CAPITAL COSTS INCLUDED
- D - PARTIAL DIRECT CAPITAL COSTS INCLUDED
- E - TOTAL INDIRECT CAPITAL COSTS INCLUDED
- F - PARITAL INDIRECT CAPITAL COSTS INCLUDED
- G - CHEMICAL FIXATION OF SLUDGE INCLUDED IN CAPITAL COST
- H - DRY SLUDGE DISPOSAL INCLUDED IN CAPITAL COST
- I - OFF-SITE LANDFILL AREA INCLUDED IN CAPITAL COST
- J - SLUDGE POND INCLUDED IN CAPITAL COST
- K - ADDITONAL SLUDGE DISPOSAL CAPACITY ADDED FOR LIFE OF SYSTEM
- L - STACK INCLUDED IN CAPITAL COST
- M - MODIFICATIONS TO STACK, DUCTS, AND/OR FANS INCLUDED IN CAPITAL COST
- N - TOTAL REGENERATION FACILITY COST INCLUDED IN CAPITAL COST
- O - PARTIAL REGENERATION FACILITY COST INCLUDED IN CAPITAL COST
- P - R & D COSTS INCLUDED IN CAPITAL COST
- Q - COSTS UNDERWRITTEN BY SYSTEM SUPPLIER INCLUDED IN CAPITAL COST
- R - EXCESS REAGENT SUPPLY COSTS INCLUDED IN CAPITAL COST

ANNUAL:

- S - TOTAL DIRECT ANNUAL COSTS INCLUDED
- T - PARTIAL DIRECT ANNUAL COSTS INCLUDED
- U - TOTAL FIXED ANNUAL COSTS INCLUDED
- V - PARTIAL FIXED ANNUAL COSTS INCLUDED
- W - OVERHEAD COSTS INCLUDED IN TOTAL ANNUAL COSTS
- X - PARTICULATE CONTROL COSTS INCLUDED IN DIRECT ANNUAL COSTS
- Y - SLUDGE DISPOSAL SERVICE COSTS (CONTRACT) INCLUDED IN DIRECT ANNUAL COSTS
- Z - REPLACEMENT ENERGY COSTS INCLUDED IN DIRECT ANNUAL COSTS

APPENDIX B

FGD PROCESS FLOW DIAGRAMS

THIS APPENDIX COMPRISES BOTH ACTIVE AND INACTIVE UNITS

ARRANGED ALPHABETICALLY ACCORDING TO UTILITY

"SUPPLEMENTAL EDITION"

CHANGES/ADDITIONS

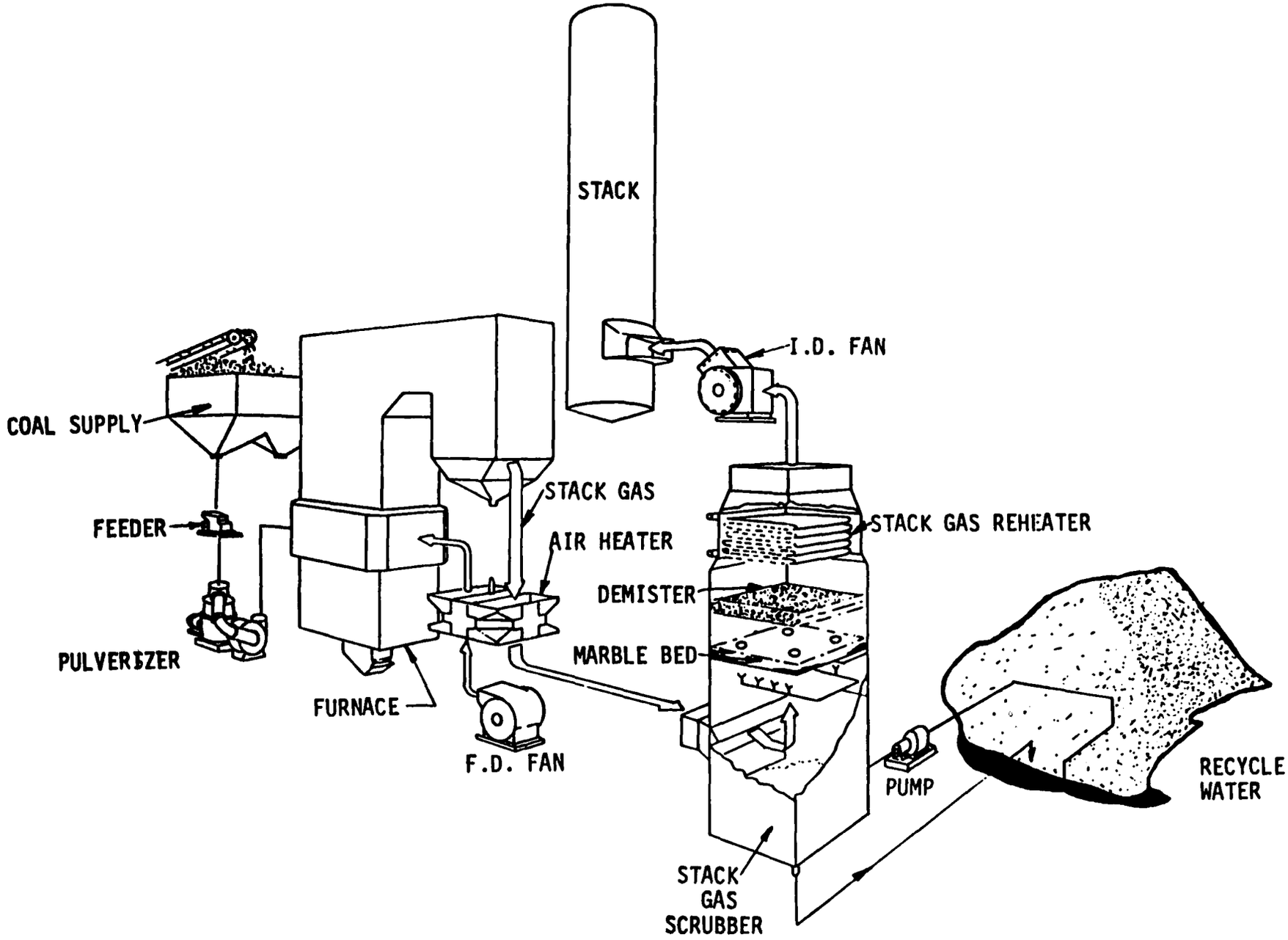

Kansas Power and Light
Original Operational FGD System at Lawrence No. 4.

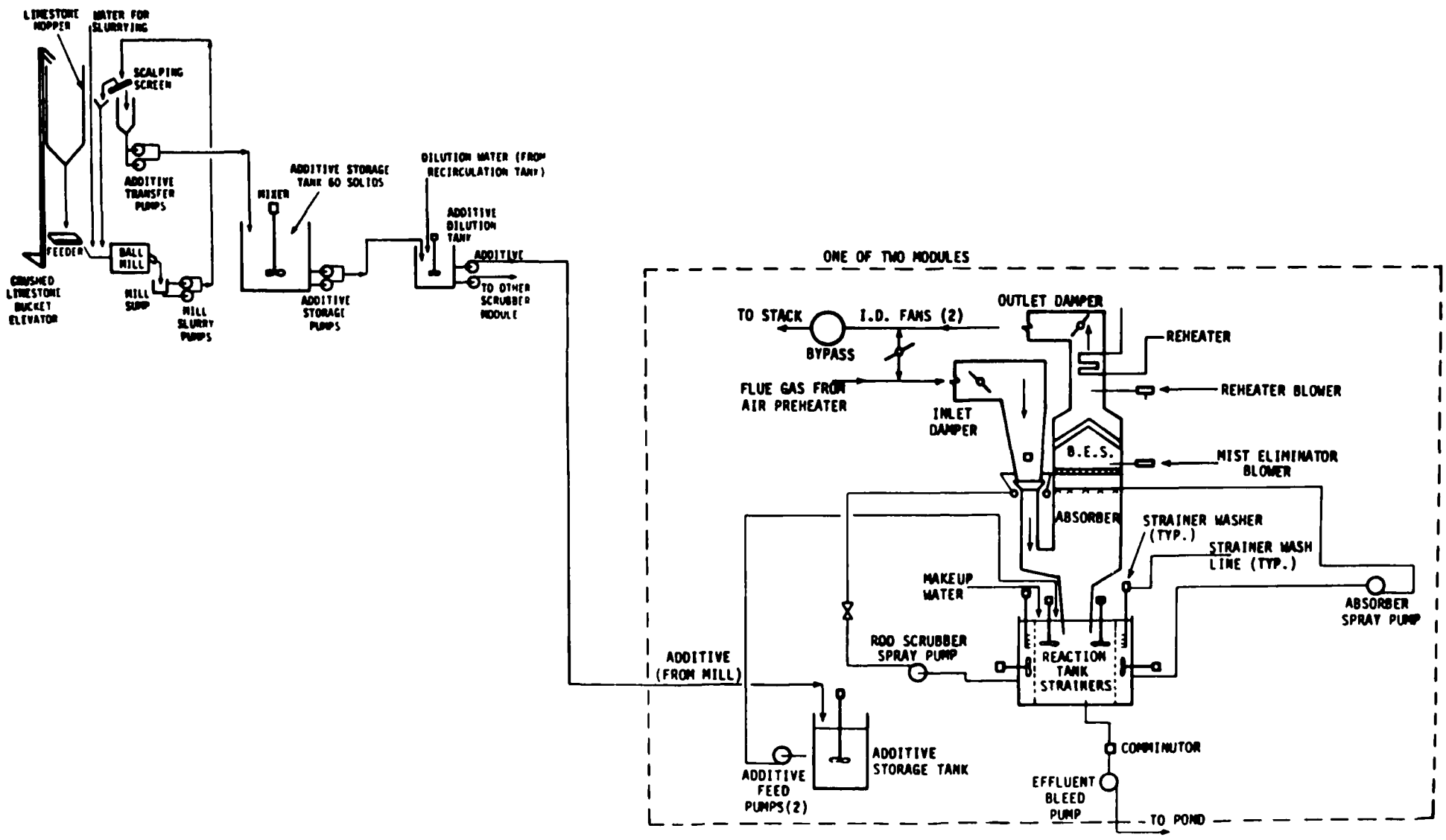

Kansas Power and Light,
Lawrence No. 4 Operational FGD System
Simplified Process Flow Diagram

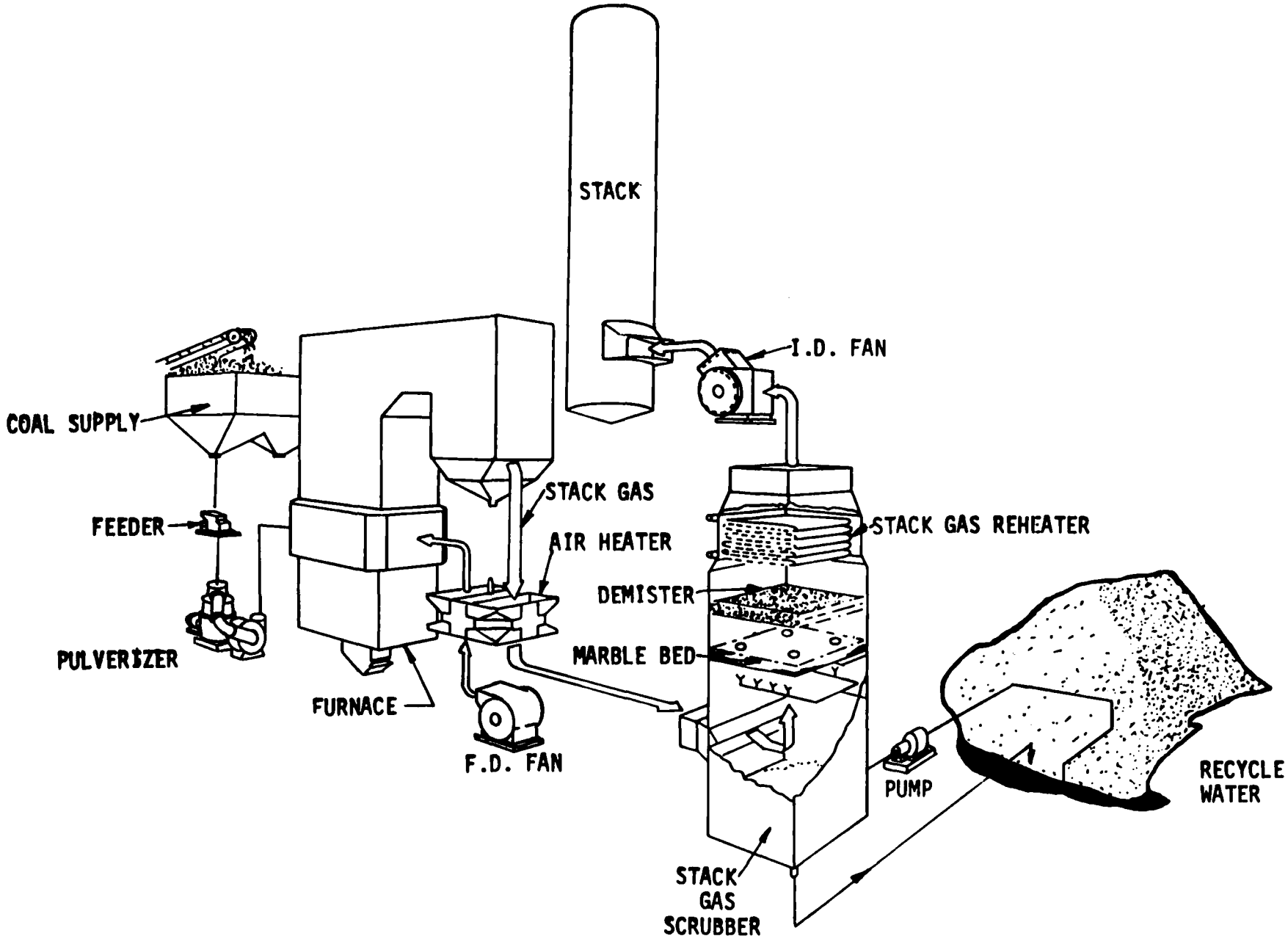

Kansas Power and Light
Original FGD System Installed at Lawrence No. 5:
Simplified Process Flow Diagram.

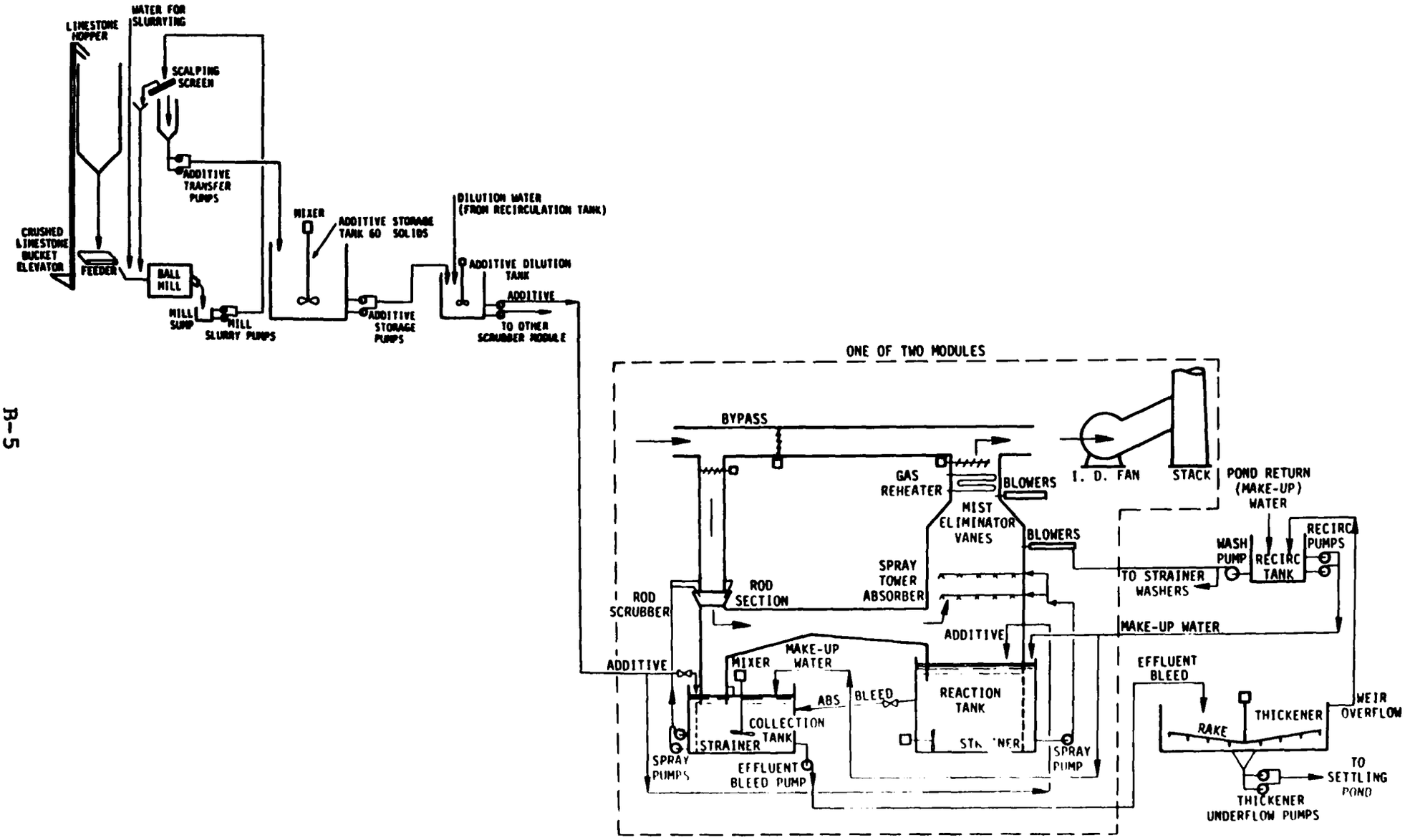

Kansas Power and Light,
Lawrence No. 5 Operational FGD System
Simplified Process Flow Diagram

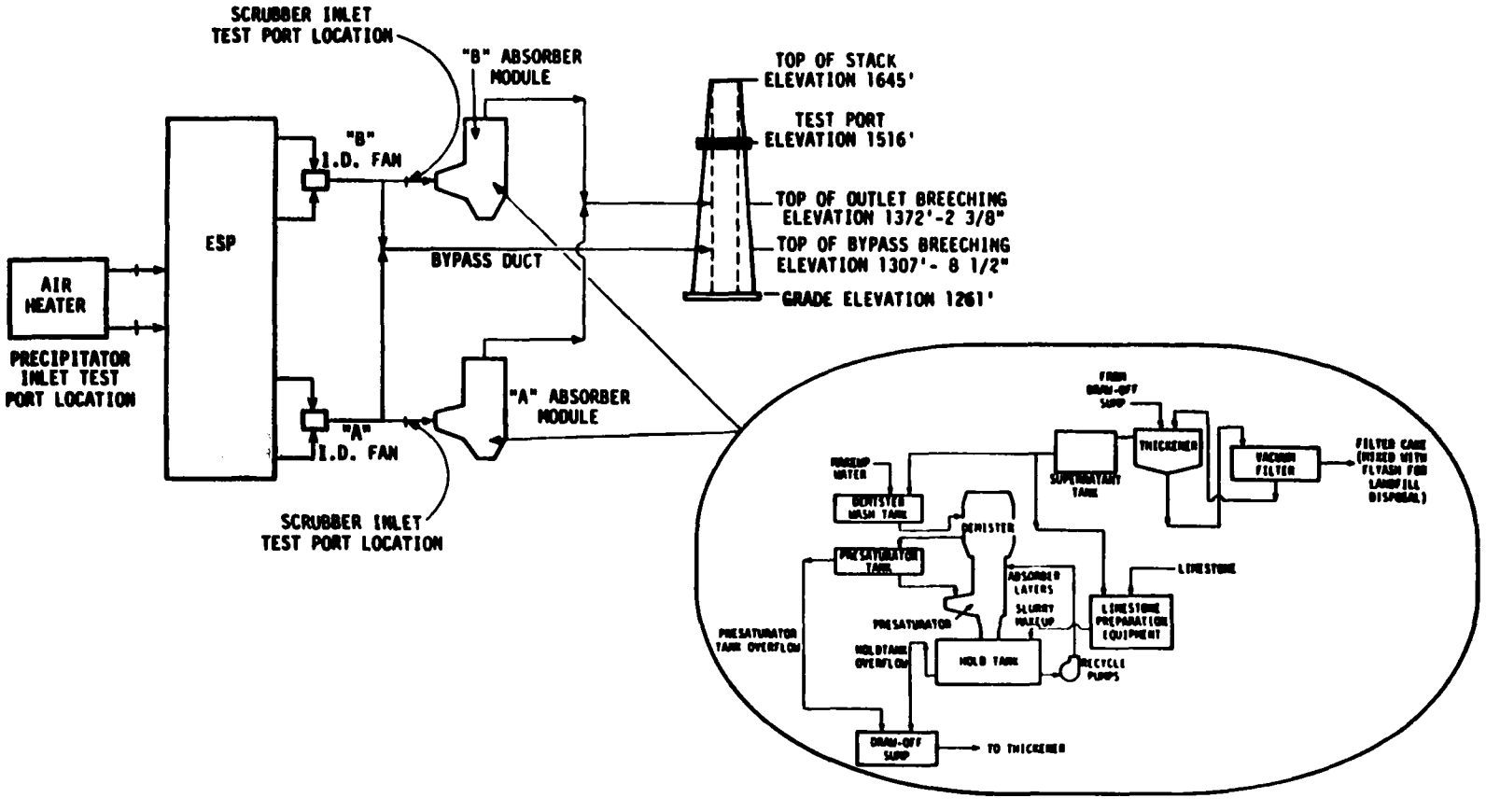

Springfield City Utilities, Southwest No. 1:
Simplified Process Diagram

APPENDIX C

DEFINITIONS

DEFINITIONS

Boiler Capacity Factor:	(kWh generation in year)/ maximum continuous generating capacity in kW x 8760 hr/yr).
Boiler Utilization Parameter:	Hours boiler operated/hours in period, expressed as a percentage.
Efficiency:	
Particulates	The actual percentage of particulates removed by the emission control system (mechanical collectors, ESP, or fabric filter and FGD) from the untreated flue gas.
SO_2	The actual percentage of SO_2 removed from the flue gas by the FGD system. Design removal efficiency values are presented for nonoperational systems for which actual removal data are not available.
FGD Viability Indexes	Several parameters have been developed to quantify the viability of FGD system technology. Various terms such as "availability," "reliability," "operability," and "utilization" are used to accurately represent the operation of any FGD system during a given period. The above-mentioned parameters are defined below and discussed briefly. The objectives of this discussion are to make the reader aware that several different definitions are being used and to select appropriate parameters that can be used for reporting purposes so that reasonably consistent comparisons can be made.

DEFINITIONS

Availability Index	Hours the FGD system is available for operation (whether operated or not) divided by hours in period, expressed as a percentage. This parameter tends to overestimate the viability of the FGD system because it does not penalize for election not to operate the system when it could have been operated. Boiler downtime may tend to increase the magnitude of the parameter because FGD failures generally cannot occur during such periods.
Reliability Index	Hours the FGD system was operated divided by the hours the FGD system was called upon to operate, expressed as a percentage. This parameter has been developed in order not to penalize the FGD system for elected outages, e.g., periods when the FGD system could have been run but was not run because of chemical shortages, lack of manpower, short duration boiler operations, etc. The main problem in using this formula is the concise determination whether or not the system was "called upon to operate" during a given time period. In addition, an undefined value can result when the FGD system is not called upon to operate for a given period (e.g., turbine or boiler outage when FGD system is available).
FGD Operability Index	Hours the FGD system was operated divided by boiler operating hours in period, expressed as a percentage. This parameter indicates the degree to which the FGD system is actually used, relative to boiler

operating time. The parameter does not reflect the extent of exertion on the FGD system, that is, the magnitude of the parameter has little or no correlation with FGD system operating time. Also, the parameter is penalized when options are exercised not to use the FGD system in periods when the system is operable. In addition, an undefined value can result when the FGD system is not called upon to operate for a given period (e.g., turbine or boiler outage when FGD system is available).

FGD Utilization Index	Hours that the FGD system operated divided by total hours in period. This parameter is a relative stress factor for the FGD system. It is not a complete measure of FGD system viability because the parameter can be strongly influenced by conditions that are external to the FGD system (e.g., infrequent boiler operation will lower the value of the parameter although the FGD system may be highly dependable in its particular application).
FGD Status:	
Category 1	Operational - FGD system is in service removing SO_2.
Category 2	Under Construction - ground has been broken for installation of FGD system, but FGD system has not become operational.
Category 3	Planned, Contract Awarded - contract has been signed for purchase of FGD system but ground has not been broken for installation.

Category 4	Planned, Letter of Intent Signed - letter of intent has been signed, but legal contract for purchase has not been awarded.
Category 5	Planned, Requesting/Evaluating Bids - bid requests have been released but no letter of intent or contract has been issued.
Category 6	Considering only FGD Systems - an FGD system is proposed as a means to meet an SO_2 regulation.
Category 7	Considering an FGD system as well as alternative methods.
Category 8	Nonoperational - FGD system has been in service in the past but has been shut down permanently or for an extended indefinite period of time.
FGD Vendor	A firm which fabricates and supplies FGD systems, most notably the flue gas treating and ancillary equipment.
Fuel Characteristics	Type of fuel, average gross heating value in Btu/lb. average percent ash and average percent sulfur content for fuel as fired.
New	FGD unit and boiler were designed at the same time or space for addition of an FGD unit was reserved when boiler was constructed.
Nonregenerable	The SO_2 removed from the flue gas is not recovered in a usable or marketable form and resulting sulfur-bearing waste products must be disposed in an environmentally acceptable fashion.

Operational Experience	Summary of FGD status and description of current month's progress.
Process	Company name if process is patented. Generic name if several companies have similar processes.
Regulatory Class	A. New boiler constructed subject to Federal New Source Performance Standards. B. Existing boiler subject to State Standard that is more stringent than the Federal New Source Performance Standard (NSPS). C. Existing boiler subject to State Standard that is equal to or less stringent than NSPS. D. Other (unknown, undetermined).
Regenerable	The SO_2 removed from the flue gas is recovered in a usable or marketable form (e.g., sulfur, sulfuric acid, gypsum, ammonium sulfate, sodium sulfate).
Retrofit	FGD unit must be added to an existing boiler not specifically designed to accommodate FGD unit.
Sludge Disposal	Disposal method for nonregenerable systems producing sludge including: lined or unlined ponds, stabilized or unstabilized sludge, and on- or off-site disposal, disposal type (minefill, landfill, structural fill). For the regenerable systems, the form or method of sulfur recovery is provided (e.g. - molten elemental sulfur, sulfuric acid plant).

Start-up Date	Date when initial SO_2 removal began or is scheduled to begin.
Total FGD System Lost Generation Factor	The total monthly lost generation hours due to FGD train outages divided by the total monthly expected generation if the FGD trains would have been available for operation, expressed as a percentage.
Unit Cost	Capital Cost in $/kW including: SO_2 absorption and regeneration system, SO_2 recovery system, solids disposal, site improvements, land, roads, tracks, substation, engineering costs, contractors fee and interest on capital during construction. Annualized Cost in mills/kWh including fixed and variable costs. Fixed costs include: interest on capital, depreciation, insurance, taxes, and labor costs including overhead. Variable costs include: raw materials, utilities, and maintenance.
Unit Location	City and State listed in mailing address.
Unit Name	Unit identification as it appears in Electrical World - Directory of Electrical Utilities, McGraw-Hill - Current Edition - or as indicated by utility representative for installations in planning stages.
Unit Rating	Operational - Maximum continuous gross generation capacity in MW; Preoperational - maximum continuous design generation capacity in MW.

Utility Name	Name of corporation as it appears in Electrical World - Directory of Electrical Utilities, McGraw-Hill - Current Edition - as space permits.
Water Make-Up	Gallons per minute of make-up water required per MW of capacity.

TECHNICAL REPORT DATA
(Please read Instructions on the reverse before completing)

1. REPORT NO. EPA-600/7-79-022a	2.	3. RECIPIENT'S ACCESSION NO.
4. TITLE AND SUBTITLE EPA Utility FGD Survey: August-September 1978		5. REPORT DATE January 1979
		6. PERFORMING ORGANIZATION CODE
7. AUTHOR(S) M. Melia, M. Smith, T. Koger, and B. Laseke		8. PERFORMING ORGANIZATION REPORT NO.
9. PERFORMING ORGANIZATION NAME AND ADDRESS PEDCo Environmental, Inc. 11499 Chester Road Cincinnati, Ohio 45246		10. PROGRAM ELEMENT NO. EHE624
		11. CONTRACT/GRANT NO. 68-02-2603, Task 24
12. SPONSORING AGENCY NAME AND ADDRESS EPA, Office of Research and Development Industrial Environmental Research Laboratory Research Triangle Park, NC 27711		13. TYPE OF REPORT AND PERIOD COVERED Periodic; 8-9/78
		14. SPONSORING AGENCY CODE EPA/600/13

15. SUPPLEMENTARY NOTES EPA project officers are N. Kaplan (IERL-RTP, MD-61, 919/541-2556) and J. C. Herlihy (DSSE, 202/755-8137). EPA-600/7-78-051a thru -051d are previous reports in this series.

16. ABSTRACT The report is an updated supplement to EPA-600/7-78-051a and should be used in conjunction with it. It presents a survey of utility flue gas desulfurization (FGD) systems in the U.S., summarizing information contributed by the utility industry, process suppliers, regulatory agencies, and consulting engineering firms. Systems are tabulated alphabetically, by development status (operational, under construction, in planning stages, or terminated operations), by utility company, by process supplier, by process, by waste disposal practice, and by regulatory class. It presents data on system design, fuel sulfur content, operating history, and actual performance. It discusses problems and solutions associated with the boilers and FGD systems. Process flow diagrams and FGD system economic data are appended to the report.

17. KEY WORDS AND DOCUMENT ANALYSIS

a. DESCRIPTORS	b. IDENTIFIERS/OPEN ENDED TERMS	c. COSATI Field/Group
Pollution	Pollution Control	13B
Flue Gases	Stationary Sources	21B
Desulfurization	Utility Boilers	07A, 07D
Electric Utilities		
Waste Disposal		15E
Boilers		13A
Maintenance		

18. DISTRIBUTION STATEMENT Unlimited	19. SECURITY CLASS (This Report) Unclassified	21. NO. OF PAGES 154
	20. SECURITY CLASS (This page) Unclassified	22. PRICE

EPA Form 2220-1 (9-73)