EPA

U.S. Environmental Protection Agency
Office of Research and Development

Industrial Environmental Research Laboratory
Cincinnati, Ohio 45268

EPA-600/7-76-034e
December 1976

ENVIRONMENTAL CONSIDERATIONS OF SELECTED ENERGY CONSERVING MANUFACTURING PROCESS OPTIONS:

Vol. V. Pulp and Paper Industry Report

Interagency
Energy-Environment
Research and Development
Program Report

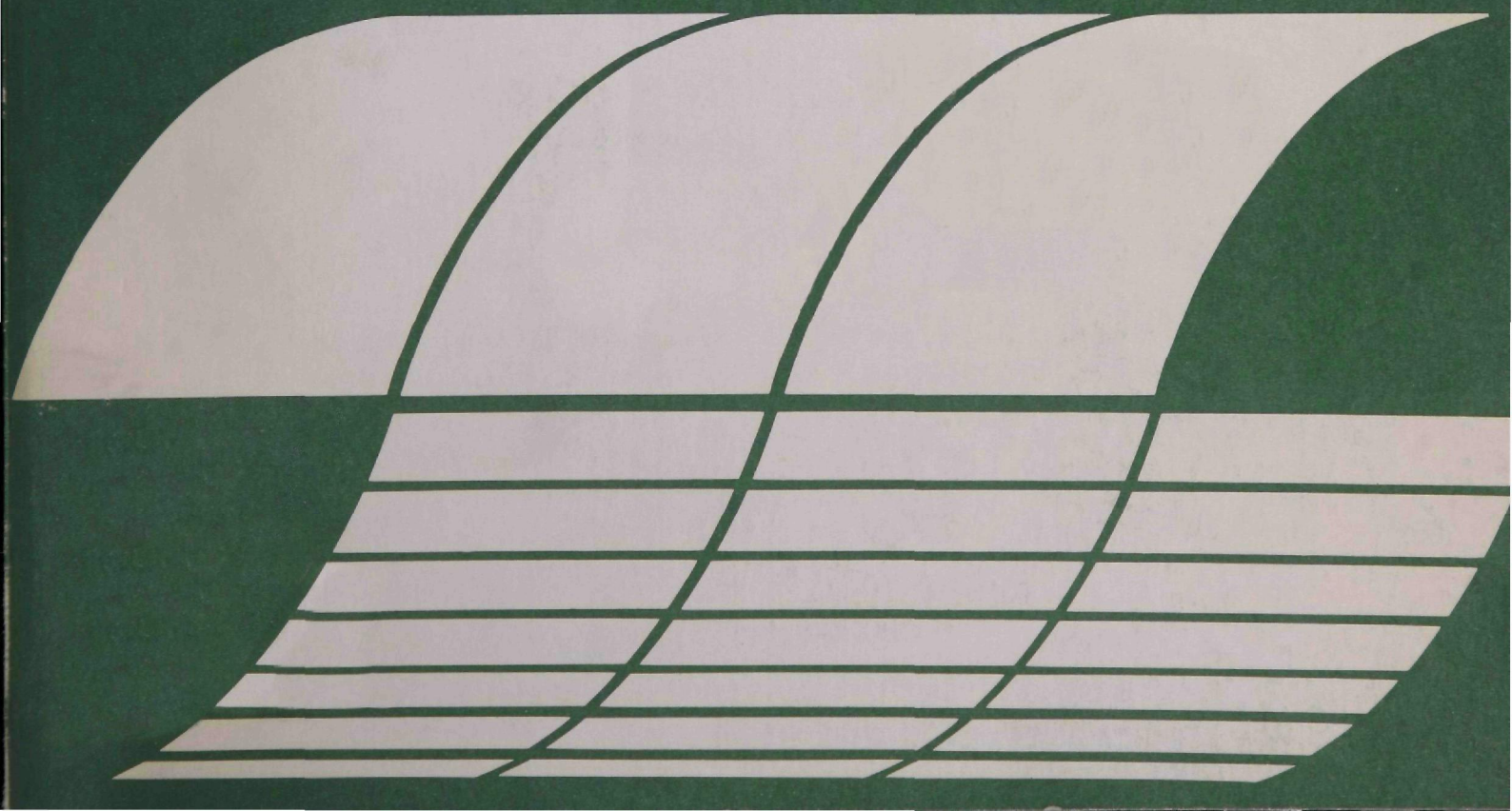

RESEARCH REPORTING SERIES

Research reports of the Office of Research and Development, U.S. Environmental Protection Agency, have been grouped into seven series. These seven broad categories were established to facilitate further development and application of environmental technology. Elimination of traditional grouping was consciously planned to foster technology transfer and a maximum interface in related fields. The seven series are:

1. Environmental Health Effects Research
2. Environmental Protection Technology
3. Ecological Research
4. Environmental Monitoring
5. Socioeconomic Environmental Studies
6. Scientific and Technical Assessment Reports (STAR)
7. Interagency Energy-Environment Research and Development

This report has been assigned to the INTERAGENCY ENERGY-ENVIRONMENT RESEARCH AND DEVELOPMENT series. Reports in this series result from the effort funded under the 17-agency Federal Energy/Environment Research and Development Program. These studies relate to EPA's mission to protect the public health and welfare from adverse effects of pollutants associated with energy systems. The goal of the Program is to assure the rapid development of domestic energy supplies in an environmentally--compatible manner by providing the necessary environmental data and control technology. Investigations include analyses of the transport of energy-related pollutants and their health and ecological effects; assessments of, and development of, control technologies for energy systems; and integrated assessments of a wide range of energy-related environmental issues.

This document is available to the public through the National Technical Information Service, Springfield, Virginia 22161.

EPA-600/7-76-034e
December 1976

ENVIRONMENTAL CONSIDERATIONS OF SELECTED ENERGY CONSERVING MANUFACTURING PROCESS OPTIONS

Volume V

PULP AND PAPER INDUSTRY REPORT

EPA Contract No. 68-03-2198

Project Officer

Herbert S. Skovronek
Industrial Pollution Control Division
Industrial Environmental Research Laboratory - Cincinnati
Edison, New Jersey 08817

INDUSTRIAL ENVIRONMENTAL RESEARCH LABORATORY
OFFICE OF RESEARCH AND DEVELOPMENT
U.S. ENVIRONMENTAL PROTECTION AGENCY
CINCINNATI, OHIO 45628

DISCLAIMER

This report has been reviewed by the Industrial Environmental Research Laboratory, U.S. Environmental Protection Agency, and approved for publication. Approval does not signify that the contents necessarily reflect the views and policies of the U.S. Environmental Protection Agency, nor does mention of trade names or commercial products constitute endorsement or recommendation for use.

FOREWORD

When energy and material resources are extracted, processed, converted, and used, the related pollutional impacts on our environment and even on our health often require that new and increasingly more efficient pollution control methods be used. The Industrial Environmental Research Laboratory - Cincinnati (IERL-Ci) assists in developing and demonstrating new and improved methodologies that will meet these needs both efficiently and economically.

This study, consisting of 15 reports, identifies promising industrial processes and practices in 13 energy-intensive industries which, if implemented over the coming 10 to 15 years, could result in more effective utilization of energy resources. The study was carried out to assess the potential environmental/energy impacts of such changes and the adequacy of existing control technology in order to identify potential conflicts with environmental regulations and to alert the Agency to areas where its activities and policies could influence the future choice of alternatives. The results will be used by the EPA's Office of Research and Development to define those areas where existing pollution control technology suffices, where current and anticipated programs adequately address the areas identified by the contractor, and where selected program reorientation seems necessary. Specific data will also be of considerable value to individual researchers as industry background and in decision-making concerning project selection and direction. The Power Technology and Conservation Branch of the Energy Systems-Environmental Control Division should be contacted for additional information on the program.

David G. Stephan
Director
Industrial Environmental Research Laboratory
Cincinnati

EXECUTIVE SUMMARY

This study deals with process modifications within the pulp and paper industry and their potential impact upon environmental considerations. It is part of a broader study in which the Environmental Protection Agency commissioned Arthur D. Little, Inc., to examine how emerging technologies in thirteen process industries affect energy consumption and the environment.

This industry sector study consists of two distinct segments:

- A preliminary, qualitative analysis of some 60 process changes and their corresponding stage of commercial development, and
- A quantitative technical/economic analysis of four changes judged to have significant energy/environmental impact within the near-term future.

In interpreting this analysis and associated results, the reader should recognize that the quality of the data is influenced by the stage of development of the associated process. That is, while the technical/economic information pertaining to current practices -- the "base line" -- may be considered firm, that for the emerging technology consists of "best estimates" by informed individuals.

Nevertheless, although some of the study results relative to the implications of these emerging technologies must be qualified as "preliminary" or "tentative," the study provides a convenient framework within which to (a) judge the relative importance of the various <u>industry sectors</u> with regard to their energy/environment characteristics, and (b) assess the status of various <u>experimental projects</u> and their potential influence on energy consumption and environmental pollution.

For purposes of this report, the pulp and paper industry is defined as starting with the raw materials delivered to the manufacturing facility and extending through to paper and paperboard manufacture. The harvesting of wood (or collection of waste paper) is not included in this analysis, nor is the downstream conversion of paper and paperboard into industrial and retail products.

The four process changes selected for detailed analysis include the following: alkaline-oxygen (A-O) pulping, the Rapson effluent-free kraft process, thermo-mechanical pulping (TMP), and the deinking of old newspapers

for the manufacture of newsprint. Other process changes and changes in industrial practice have been considered and evaluated in a qualitative manner with respect to their potential effect on energy usage and emissions.

The alkaline-oxygen pulping process is presently in the commercial development stage. The first commercial operation was started in December 1975. If it is successful and the process is adopted by the industry, its widespread use could alleviate much of the air and water effluent problems caused by conventional kraft mills. The A-O process would not only eliminate the sulfur and odor emanating from the conventional kraft recovery process but also ameliorate the color problem associated with the conventional caustic/chlorine bleach system that is typically used with the kraft process. However, it would not reduce air emissions from the power boilers of the kraft mill nor significantly affect the solid waste problem.

Because commercial sample material is not available for testing, there is some uncertainty about the strength characteristics of the A-O pulp and, hence, the degree to which it might replace kraft pulp. Initially, bleached softwood pulp from the A-O process appeared to be weaker than kraft; therefore, its primary application was expected to be as a replacement for bleached hardwood pulp, where strength properties would not be a major consideration. More recent (but unconfirmed) reports indicate that bleaching does not degrade the strength of A-O softwood pulp as much as originally believed. Development of this process should be followed and government participation in its evaluation should be considered.

The Rapson effluent-free kraft process is also in the commercial development stage. It is designed to eliminate the BOD, suspended solids, and color that characterize effluents from the chlorine/caustic bleaching system used with the conventional kraft process. It does not affect solid waste or air emissions; however, should the first commercial installation prove technically and economically successful, broad adoption of the process by U.S. kraft mills could greatly alleviate the water pollution problems that confront this large segment of the industry. The Rapson process would also use much less energy and be less costly than conventional kraft pulping and bleaching. In fact, it is the most significant and imminent process change in the industry from the standpoint of saving energy and reducing pollution. The development of this process should be encouraged and, if necessary, assisted in its commercialization.

Thermo-mechanical pulping has been developed commercially only within the past five years. Although it produces a stronger pulp, it uses about as much energy and causes about as much pollution as conventional processes do. A modified version of this process, chemi-thermo-mechanical pulping, could reduce energy requirements and could expand the available supply of pulpwood (because both hardwoods and softwoods can be treated by this process). However, the water effluent from the latter process would contain more BOD and suspended solids than is the case with thermo-mechanical pulping and thus would likely require additional treatment.

Since thermo-mechanical pulping is now in commercial use, it merits less attention than the alkaline-oxygen and Rapson processes. Chemi-thermo-mechanical pulping, however, deserves to be watched closely, because it is in the early development stage and its full impact with regard to energy and environmental considerations has not been established.

The deinking of old news (waste newspapers) for newsprint manufacture is a well-established commercial practice. The process uses significantly less energy than the substituted materials (mechanical and kraft pulps), and since it is a recycling operation it conserves the virgin fiber needed for other applications. The water emissions from old news deinking operations have been demonstrated to be manageable and in compliance with water effluent regulations. Also, since the pulping operation uses no sulfur, it creates no odor. Finally, as waste paper comprises the largest segment of household trash and old news makes up a major portion of that waste stream, recovery and reuse of old news would significantly reduce the quantity of municipal solid waste.

Because the deinking of old news offers such a unique opportunity to conserve energy without any apparent adverse effect on the environment, the practice should be encouraged by EPA wherever it is economically feasible.

Two other developments warrant governmental attention, not so much because of effects on pollution as for the significant energy savings: (1) the energy that might be saved by alternative paper-drying methods is large enough to justify pilot-plant evaluation of the more promising techniques, and (2) potential energy savings through the use of displacement washing should be quantified. These processes were not studied in depth in this analysis, because they did not meet a criterion established for selection -- namely, to have a significant energy/environmental impact within the near-term future. Nevertheless, developments in these areas could have a profound effect on energy conservation and thus are worthy of support.

This report was submitted in partial fulfillment of contract 68-03-2198 by Arthur D. Little, Inc. under sponsorship of the U.S. Environmental Protection Agency. This report covers a period from June 9, 1975 to February 9, 1976.

TABLE OF CONTENTS

	Page
	ii
FOREWORD	iii
EXECUTIVE SUMMARY	iv
List of Figures	x
List of Tables	xi
Acknowledgments	xv
List of Abbreviations and Symbols	xvii
Conversion Table	xviii
I. INTRODUCTION	1
A. BACKGROUND	1
1. General	1
2. Pulp and Paper Industry	2
B. SCOPE	4
C. APPROACH	5
II. FINDINGS, CONCLUSIONS, AND RECOMMENDATIONS	8
A. FINDINGS	8
1. Alkaline-Oxygen (A-O) Pulping	8
2. Rapson Effluent-Free Kraft Process	11
3. Thermo-Mechanical Pulping	12
4. Deinking of Old News for Newsprint Manufacture	13
B. CONCLUSIONS	13
C. RECOMMENDED AREAS FOR RESEARCH/DEMONSTRATION	15
III. INDUSTRY OVERVIEW	17
A. INTRODUCTION	17
B. GENERAL ECONOMIC CHARACTERISTICS	20
1. Demand	20
2. Supply	23

TABLE OF CONTENTS (Cont.)

		Page
C.	CHARACTERISTICS OF PRODUCT SECTORS	23
	1. Market Pulp	24
	2. Containerboard	25
	3. Folding Boxboard	27
	4. Newsprint and Uncoated Groundwood Paper	28
	5. Printing, Writing, and Related Papers	29
	6. Tissue and Related Papers	30
	7. Industrial Packaging and Converting Papers	31
	8. Construction Paper and Paperboard	32
D.	PROCESS/PRODUCT RELATIONSHIPS	32
E.	ENERGY USAGE BY PROCESS/PRODUCT CATEGORY	35
	1. Pulping	35
	2. Papermaking	38
	3. Total Energy Requirement	38
IV.	PRELIMINARY EVALUATION OF PROCESS TECHNOLOGY	47
A.	IDENTIFICATION OF MAJOR UNIT OPERATIONS	47
B.	SUMMARY OF PRELIMINARY EVALUATION	49
C.	WOOD PREPARATION	51
	1. Current Practice	51
	2. New Technology	52
D.	PULPING, BLEACHING, AND RECOVERY	54
	1. Standard Technology	54
	2. New Process Technology	63
	3. Impact on Energy Consumption and Pollution Load	72
E.	PAPERMAKING	74
	1. Standard Technology	74
	2. New Technology	75
	3. New Technology: Energy and Pollution Considerations	81
F.	INDUSTRIAL PRACTICE	82
	1. All-Kraft Newsprint	82
	2. Coated Unbleached Kraft Board	82
	3. Lower-Brightness Pulp	83
	4. Increased Use of Secondary Fiber	83

TABLE OF CONTENTS (Cont.)

	Page
V. DETAILED ANALYSIS OF SELECTED ALTERNATIVES	84
A. ALKALINE-OXYGEN PULPING	84
1. Process Description	84
2. Energy Consumption and Pollution Load	85
3. Quality and Cost Comparison	89
4. Summary	95
B. RAPSON EFFLUENT-FREE KRAFT PROCESS	95
1. Process Description	95
2. Advantages	96
3. Energy Consumption and Pollution Load	98
C. THERMO-MECHANICAL PULPING	98
1. Process Description	98
2. Advantages	105
3. Energy Consumption and Pollution Load	106
D. DEINKING OF OLD NEWS FOR NEWSPRINT MANUFACTURE	113
1. Background	113
2. Process Description	114
3. Comparison of Current and Alternative Technology	115
APPENDIX A - SUPPLY/DEMAND BY PRODUCT SECTOR	120
APPENDIX B - BASE LINE ENERGY USAGE	152
APPENDIX C - CURRENT POLLUTION LOADS, TREATMENT TECHNOLOGY, AND COSTS TO MEET PROPOSED GUIDELINES	159

LIST OF FIGURES

Number		Page
III-1	Unit and Total Annual Purchased Energy for Slush Pulp Production for Selected Pulping Processes	39
III-2	Energy Intensivity for Selected Pulp and Paper Process/ Product Combinations (New Mill Basis)	45
IV-1	Standard Kraft Technology Material and Energy Balance	57
IV-2	Energy Requirements and Hydraulic Effluent Loads for Bleached Kraft Paper and Board Production	62
V-1	Material and Energy Balance for A-O Slush Pulp	86
V-2	Rapson Effluent-Free Kraft Process Material Balance	99
V-3	Schematic Flow Diagram of Alternative Mechanical Pulping Techniques	107
V-4	Raw Material and Energy Requirements and Pollution for Deinked Newsprint Furnish (New Mill Basis)	115
B-1	Manufacture of Kraft Liner From Virgin Fiber	153
B-2	Manufacture of Corrugating Medium From Kraft Liner	154
B-3	Manufacture of 18-PT Clay-Coated Boxboard From Secondary Fiber	155
B-4	Manufacture of SBS Board From Virgin Fiber	156
B-5	Manufacture of Bond Paper From Virgin Fiber	157
B-6	Manufacture of Bond Paper From Secondary Fiber	158
C-1	Alternative Treatment Systems	162

LIST OF TABLES

Number		Page
I-1	Summary of 1971 Energy Purchased in Selected Industry Sectors	3
II-1	Comparison of A-O and Rapson Process With Standard Kraft Slush Pulp (New mill basis)	9
II-2	Comparison of Newsprint Slush Pulp Furnish From Deinking, RMP, and TMP (New mill basis)	10
III-1	Largest Industry Consumers of Fuels and Electric Energy for Heat and Power, 1971	18
III-2	Largest Industry Consumers of Fresh Water, 1973	18
III-3	Sales to Assets Ratios for Selected Manufacturing Industries (Second quarter, 1974)	19
III-4	Number of Pulp and Paper Mills by Pulp Manufacturing Process	21
III-5	Projected U.S. Demand for Paper and Paperboard	22
III-6	Commercial Processes for Pulping Wood	33
III-7	Process/Product Relationships - Woodpulp Consumed, by Type, 1973 (Type of pulp consumed divided by U.S. product production)	36
III-8	Energy Usage for Slush Pulp Production, by Major Pulping Processes	37
III-9	Energy Usage for Forming and Drying, by Major Product Grade	40
III-10	Total Energy Usage, by Major Process and Product Grade	41
III-11	Comparison of ADL Energy Usage Estimates with API Reported Data	43
III-12	Regional Patterns of Fuel Use in the U.S. Paper Industry	44
IV-1	Major Unit Operations in Paper and Paperboard Manufacture	48
IV-2	Preliminary Ranking of Process Changes or Changes in Industrial Practice	50

LIST OF TABLES (Cont.)

Number		Page
IV-3	Energy Requirements and Pollution Loads for Bleached Slush Pulp	58
IV-4	Energy Requirements for a New, Integrated Bleached Kraft Pulp Mill	59
IV-5	Energy Requirements and Pollution Loads for Bleached Kraft Paper and Board Production	61
V-1	Energy Requirements for A-O Slush Pulp (47% Yield), by Major Process Step	87
V-2	Summary - Energy Consumption and Pollution Loads, A-O Process	88
V-3	Standard Bleached A-O Slush Pulp Investment and Production Costs	90
V-4	Comparison of A-O and Standard Kraft Slush Pulp	92
V-5	Standard Bleached Kraft Slush Pulp Investment and Production Costs	93
V-6	Energy Requirements for Rapson Effluent-Free Kraft Slush Pulp, by Major Process Step	100
V-7	Summary - Consumption and Pollution Loads for Rapson Effluent-Free Slush Pulp Production, by Process Step	101
V-8	Rapson Effluent-Free Kraft Process - Investment and Production Costs	102
V-9	Comparison of Rapson Effluent-Free Process With Standard Kraft Slush Pulp	104
V-10	Energy Requirements and Pollution Loads for Slush Pulp From Mechanical Processes	107
V-11	RMP Slush Pulp Investment and Production Costs	108
V-12	TMP Slush Pulp Investment and Production Costs	110
V-13	Comparison of Newsprint Slush Pulp Furnish From RMP and TMP	112
V-14	Comparison of Newsprint Slush Pulp Furnish From Deinking, RMP, and TMP	116
V-15	Deinked News Investment and Production Costs	118

LIST OF TABLES (Cont.)

Number		Page
A-1	U.S. Bleached Market Pulp End Uses, 1973	121
A-2	Concentration in North American Market Pulp Supply	123
A-3	U.S. Capacity, Production, Trade, and Consumption of Bleached Paper-Grade Pulp, 1969-1974	124
A-4	World Capacity Trends for Softwood Bleached Kraft Pulp	126
A-5	World Capacity Trends for Hardwood Bleached Kraft Pulp	126
A-6	Average Annual Increase In World Pulp and Paper Capacities	127
A-7	Free-World Bleached Paper-Grade Pulp Demand, 1975-1980	127
A-8	Major Containerboard Producers	128
A-9	Containerboard Supply/Demand Trends	129
A-10	Leading U.S. Solid Bleached Board Producers	132
A-11	Leading U.S. Recycled Boxboard Producers	132
A-12	Boxboard Supply/Demand Trends	133
A-13	Capacities of Major North American Newsprint Suppliers, 1974	135
A-14	Capacities of Major U.S. Uncoated Groundwood Paper Suppliers, 1974	136
A-15	Groundwood Paper Supply/Demand Trends	138
A-16	U.S. Production of Printing, Writing, and Related Paper Products, 1973	139
A-17	Concentration in U.S. Printing and Writing Paper Supply	140
A-18	Printing, Writing, and Related Paper Supply/Demand Trends	141
A-19	1974 Tissue Production by Product	143
A-20	Major U.S. Tissue Producers	143
A-21	Tissue Paper Supply/Demand Trends, 1973-1977	144
A-22	Production of Industrial Packaging and Miscellaneous Converting Papers, 1973	146

LIST OF TABLES (Cont.)

Number		Page
A-23	Capacities of Major Producers of Unbleached Kraft and Other Packaging and Industrial Converting Paper Products, 1973	147
A-24	Capacities of Major Producers of Special Industrial Paper, 1973	147
A-25	Supply/Demand Trends for Industrial Packaging, Converting, and Miscellaneous Papers	148
A-26	Major Producers of Construction Paper	149
A-27	Major Producers of Gypsum Linerboard	149
A-28	Capacities of Major Producers of Hardboard and Insulation Board	150
A-29	Construction Paper and Board Supply/Demand Trends	151
C-1	BATEA Effluent Limitations in kg/kkg (lb/ton)	160
C-2	Identification of Internal Technology Items	161
C-3	State Standards for Emissions from Pulp Mills	170
C-4	Summary of Proposed Standards and Monitoring Requirements	171
C-5	Standards of Performance for New Steam Generators Having Capacity Greater than 250 Million Btu/Hr	172
C-6	Air Emissions Loads for Kraft (Standard and Rapson) and Alkaline-Oxygen Pulping (New Mill Basis)	172
C-7	Control Costs for Recovery Boilers	174
C-8	Control Costs for Lime Kiln System	177
C-9	Control Costs for Smelt Tank System	178
C-10	Control Costs for Digester and Multiple-Effect Evaporators	179
C-11	Control Costs for the Brown Stock Washers	180
C-12	Control Costs for Black Liquor Oxidation System	180
C-13	Control Costs for the Condensate Stripper	181
C-14	Control Costs for Power Boilers	182
C-15	Wisconsin Ambient Air Standards	183
C-16	Air Control Costs, New Mill Sources	185

ACKNOWLEDGMENTS

This study could not have been accomplished without the support of a great number of people in government agencies, industry, trade associations and universities. Although it would be impossible to mention each individual by name, we would like to take this opportunity to acknowledge the particular support of a few such people.

Dr. Herbert S. Skovronek, Project Officer, was a valuable resource to us throughout the study. He not only supplied us with information on work presently being done in other branches of EPA and other government agencies, but served as an indefatigable guide and critic as the study progressed. His advisors within EPA, FEA, DOC, and NBS also provided us with insights and perspectives valuable for the shaping of the study.

During the course of the study we also had occasion to contact many individuals within industry and trade associations. Where appropriate we have made reference to these contacts within the various reports. Frequently, however, because of the study's emphasis on future developments with comparative assessments of new technology, information given to us was of a confidential nature or was supplied to us with the understanding that it was not to be credited. Therefore, we extend a general thanks to all those whose comments were valuable to us for their interest in and contribution to this study.

Finally, because of the broad range of industries covered in this study, we are indebted to many people within Arthur D. Little, Inc. for their participation. Responsible for the guidance and completion of the overall study were Mr. Henry E. Haley, Project Manager; Dr. Charles L. Kusik, Technical Director; Mr. James I. Stevens, Environmental Coordinator; and Ms. Anne B. Littlefield, Administrative Coordinator.

Members of the environmental team were Dr. Indrakumar L. Jashnani, Mr. Edmund H. Dohnert and Dr. Richard Stephens (consultant).

Within the individual industry studies we would like to acknowledge the contributions of the following people.

Iron and Steel:
Dr. Michel R. Mounier, Principal Investigator
Dr. Krishna Parameswaran

Petroleum Refining:
Mr. R. Peter Stickles, Principal Investigator
Mr. Edward Interess
Mr. Stephen A. Reber
Dr. James Kittrell (consultant)
Dr. Leigh Short (consultant)

Pulp and Paper:	Mr. Fred D. Iannazzi, Principal Investigator Mr. Donald B. Sparrow Mr. Edward Myskowski (consultant) Mr. Karl P. Fagans Mr. G. E. Wong
Olefins:	Mr. Stanley E. Dale, Principal Investigator Mr. R. Peter Stickles Mr. J. Kevin O'Neill Mr. George B. Hegeman
Ammonia:	Mr. John L. Sherff, Principal Investigator Ms. Nancy J. Cunningham Mr. Harry W. Lambe
Aluminum:	Mr. Richard W. Hyde, Principal Investigator Ms. Anne B. Littlefield Dr. Charles L. Kusik Mr. Edward L. Pepper Mr. Edwin L. Field Mr. John W. Rafferty
Textiles:	Dr. Douglas Shooter, Principal Investigator Mr. Robert M. Green (consultant) Mr. Edward S. Shanley Dr. John Willard (consultant) Dr. Richard F. Heitmiller
Cement:	Dr. Paul A. Huska, Principal Investigator Ms. Anne B. Littlefield Mr. J. Kevin O'Neill
Glass:	Dr. D. William Lee, Principal Investigator Mr. Michael Rossetti Mr. R. Peter Stickles Mr. Edward Interess Dr. Ravindra M. Nadkarni
Chlor-Alkali:	Mr. Roger E. Shamel, Principal Investigator Mr. Harry W. Lambe Mr. Richard P. Schneider
Phosphorus/ Phosphoric Acid:	Mr. William V. Keary, Principal Investigator Mr. Harry W. Lambe Mr. George C. Sweeney Dr. Krishna Parameswaran
Primary Copper:	Dr. Ravindra M. Nadkarni, Principal Investigator Dr. Michel R. Mounier Dr. Krishna Parameswaran
Fertilizers:	Mr. John L. Sherff, Principal Investigator Mr. Roger Shamel Dr. Indrakumar L. Jashnani

LIST OF ABBREVIATIONS AND SYMBOLS

ABBREVIATIONS

ADL	Arthur D. Little, Inc.
ADP	air-dried pulp
ADT	air-dry ton
AEP	ammonia explosion process
A-O	alkaline-oxygen
API	American Paper Institute
BATEA/BAT	best available technology economically achievable
BD	bone-dry (0% moisture)
BOD	biochemical oxygen demand
BOD_5	5-day biochemical oxygen demand
BPTCA/BPT	best practical control technology currently available
CMC	sodium carboxymethyl cellulose
CTMP	chemi-thermo-mechanical pulping
ESP	electrostatic precipitator
fpm	feet per minute
g/dscm	grams per dry standard cubic meter
gr/dscf	grains per dry standard cubic foot
IGCI	Industrial Gas Cleaning Institute
MDT	machine-dry ton
NSPS	New Source Performance Standards
NSSC	neutral sulfite semi-chemical
OCC	old corrugated containers
PPRIC	Pulp and Paper Research Institute of Canada
P/S	pulp substitute
RMP	refiner mechanical pulping
R.O.I.	return on investment
SBS	solid bleached sulfate
SCF	standard cubic foot
S/F	secondary fiber
SW	softwood
TMP	thermo-mechanical pulping
tpd	tons per day
tpy	tons per year
TRS	total reduced sulfur
TSS	total suspended solids
WG	water gauge

SYMBOLS

Cl_2	chlorine
ClO_2	chlorine dioxide
H_2SO_4	sulfuric acid
$NaClO_3$	sodium chlorate
Na_2CO_3	sodium carbonate (soda ash)
NaOH	sodium hydroxide (caustic soda)
Na_2SO_4	sodium sulfate (salt cake)

ENGLISH-METRIC (SI) CONVERSION FACTORS

To Convert From	To	Multiply By
Acre	Metre^2	4,046
Atmosphere (normal)	Pascal	101,325
Barrel (42 gal)	Metre^3	0.1589
British Thermal Unit	Joule	1,055
Centipoise	Pascal-second	0.001
Degree Fahrenheit	Degree Celsius	$t_c^\circ = (t_F^\circ - 32)/1.8$
Degree Rankine	Degree Kelvin	$t_K^\circ = t_R^\circ/1.8$
Foot	Metre	0.3048
Foot^3/minute	Metre^3/sec	0.0004719
Foot^3	Metre^3	0.02831
Foot^2	Metre^2	0.09290
Foot/sec	Metre/sec	0.3048
Foot^2/hr	Metre^2/sec	0.00002580
Gallon (U.S. liquid)	Metre^3	0.003785
Horsepower (550 ft-lbf/sec)	Watt	745.7
Horsepower (electric)	Watt	746.0
Horsepower (metric)	Watt	735.5
Inch	Metre	0.02540
Kilowatt-hour	Joule	3.60×10^6
Litre	Metre^3	1.000×10^{-3}
Micron	Metre	1.000×10^{-6}
Mil	Metre	0.00002540
Mile (U.S. statute)	Metre	1,609
Poise	Pascal-second	0.1000
Pound force (avdp)	Newton	4.448
Pound mass (avdp)	Kilogram	0.4536
Ton (assay)	Kilogram	0.02916
Ton (long)	Kilogram	1,016
Ton (metric)	Kilogram	1,000
Ton (short)	Kilogram	907.1
Tonne	Kilogram	1,000

Source: American National Standards Institute, "Standard Metric Practice Guide," March 15, 1973. (ANS72101-1973) (ASTM Designation E380-72)

I. INTRODUCTION

A. BACKGROUND

1. General

With an annual consumption of about 27 quads*, industry accounts for approximately 40% of U.S. energy consumption.** This energy is used for heating and cooling process materials, space heating, drying, supplying the energy for chemical reactions, and other miscellaneous uses. The fractional usage in these categories varies widely from industry to industry, as well as from plant to plant.

In many industrial sectors significant reduction in energy use can be achieved by better "housekeeping" (i.e., by shutting off standby furnaces, better temperature control, elimination of steam leaks, reducing heat losses, etc.) and greater emphasis on optimization of energy usage. Further improvements in energy conservation can be expected from new industrial practices or processes that are introduced because of shortages (or risk of shortages) of a specific chemical feedstock or fuel form, economic pressures, etc.

Such changes in industrial practices may result in changes in air, water, and solid waste discharges. Within the scope of the present assignment, the EPA is interested in identifying the pollution loads of new industrial practices or processes and determining where additional research and development efforts are needed to characterize the effluent streams and to develop technology to control the effluents.

In the first phase of the study, we identified industry sectors having a potential for change, with an emphasis on changes having an environmental/energy impact. After discussions with the EPA Project Officer and his advisors, we selected industry sectors for in-depth study using two basic criteria:

- Quantitative factors based on gross amounts of energy (fossil fuel and electric) purchased by industry sector, as found in U.S. Census figures and industry sources;
- Qualitative factors relating to probability and potential for process change, and the energy and effluent consequences of such changes.

*1 quad = 10^{15} Btu

**Purchased electricity valued at an approximate fossil fuel equivalence of 10,500 Btu/kWh

After considering both the quantitative and qualitative factors, we obtained a ranking of industries which we believe identifies those sectors showing the greatest probability of energy conservation via process change. This listing was then reviewed to incorporate less quantitative factors which were not easily accommodated in any other fashion (e.g., including industries of different technological or business character so that results of the study would form a pattern by which other industries could be assessed).

By this ranking method, the pulp and paper industry (which consumes 2.4 quads per year*) appears in third place among the 13 industrial segments considered in this study. In terms of purchased energy, the industry is in third place (Table I-1).

2. Pulp and Paper Industry

The pulp and paper industry is extremely diversified, employing numerous manufacturing techniques for the production of over two thousand primary products. In some instances, alternative processes may be used to make the same product; in other instances, a particular process is used because the properties (and cost) of the product best suit the needs of the end-use application.

Wood of various forms provides about 80% of the total cellulosic raw material; most of the remainder comes from waste paper. A minor amount (less than 1%) consists of other raw materials such as agricultural residues (bagasse), rags, and synthetic or inorganic (asbestos) fibers.

Although there are numerous manufacturing processes, in general the same unit operations are involved in each, namely:

- Raw material harvesting, collection, and transportation;
- Wood preparation (i.e., the conversion of wood delivered to a plant site into a form suitable for subsequent processing);
- Pulping (i.e., the conversion of wood chips or other raw material into papermaking fiber via chemical and/or mechanical means);
- Bleaching, where applicable;
- Stock preparation (i.e., size reduction and "hydration" of the fiber to improve its papermaking properties);

---

*J.M. Duke, "Patterns of Fuel and Energy Consumption in the U.S. Pulp and Paper Industry," American Paper Institute, March 1974, p. 2-3. (Figure includes purchased energy and residue fuels such as bark and black liquor.)

TABLE I-1

SUMMARY OF 1971 ENERGY PURCHASED IN SELECTED INDUSTRY SECTOR

	Industry Sector	10^{15} Btu/Yr.	SIC Code In Which Industry Found
1.	Blast furnaces and steel mills	3.49[1]	3312
2.	Petroleum refining	2.96[2]	2911
3.	Paper and allied products	1.59	26
4.	Olefins	0.984[3]	2818
5.	Ammonia	0.63[4]	287
6.	Aluminum	0.59	3334
7.	Textiles	0.54	22
8.	Cement	0.52	3241
9.	Glass	0.31	3211, 3221, 3229
10.	Alkalies and chlorine	0.24	2812
11.	Phosphorus and phosphoric acid production	0.12[5]	2819
12.	Primary copper	0.081	3331
13.	Fertilizers (excluding ammonia)	0.078	287

(1) Estimate for 1967 reported by FEA Project Independence Blueprint, p. 6-2, USGPO, November 1974.

(2) Includes captive consumption of energy from process byproducts (FEA Project Independence Blueprint)

(3) Olefins only, includes energy of feedstocks: ADL estimates

(4) Ammonia feedstock energy included: ADL estimates

(5) ADL estimates

Source: 1972 Census of Manufactures, FEA Project Independence Blueprint, USGPO, November 1974, and ADL estimates.

- Sheet formation (actually the separation of fiber from a dilute aqueous slurry onto a continuous screen via gravity and vacuum);
- Pressing (i.e., further mechanical removal of water); and
- Drying.

These basic process steps are modified to produce the varied paper and paperboard products that are used in numerous end-use applications.

This study deals with some of the major manufacturing processes and the specific process steps which have significant energy/pollution characteristics.

B. SCOPE

Within each of the 13 industry sectors, a variety of potential process changes could normally be identified. We focused on changes in the primary production processes that had clearly defined pollution consequences, either of a desirable or undesirable nature. Process changes selected for detailed analysis included:

- Alkaline-oxygen pulping
- Rapson effluent-free kraft process
- Thermo-mechanical pulping
- Deinking of old newsprint

Other process changes and changes in industrial practice have been discussed in a qualitative manner and ranked according to their relative stage of commercial development.

In selecting the changes to be included in this study, we considered the needs and limitations of the EPA as discussed in our "Industry Priority Report." Specifically, energy conservation is defined broadly to include conservation of the form value of energy by a process change (e.g., conserving natural gas while using more energy units of coal) or a feedstock change. Energy conservation resulting from changes in industrial practice or pollution control methods is included within the scope of this study. Emphasis was placed on process changes with near-term (up to 8 years) rather than long-term (8-15) potential.

Because of work being funded under other contracts and our desire to focus this study on "process changes," the following were generally <u>not</u> considered to be within the scope of the overall study:

- Better waste heat utilization;
- Energy conservation as a result of policing or "housekeeping" (e.g., shutting off standby furnaces);

- Power generation;
- Steam generation by alternative fuels (e.g., use of coal in place of oil or gas);
- Carbon monoxide boilers (however, unique process vent streams yielding recoverable energy should be mentioned);
- Fuel substitution in fired process heaters;
- Mining and milling (except where an integral part of the process);
- Substitution of scrap, such as iron, aluminum, glass or paper;
- Production of synthetic fuels from coal (low- and high-Btu gas, synthetic crude oil, synthetic fuel oil, etc.);
- All aspects of transportation.

For the pulp and paper industry sector, however, two exceptions to the above were made:

(1) Although we did not evaluate the use of alternative fossil fuels, we did identify the quantity of energy supplied to the pulp and papermaking process via the burning of residue fuels such as "black liquor," bark, wood waste, and other hogged fuels.

(2) Since waste paper supplies over 20% of the total fiber required by the industry, and because its use has a profound effect upon energy consumption, the substitution of this form of "scrap" was considered within the scope of our analysis.

C. APPROACH

In each of the studied product/process areas, we begin with cellulosic raw material delivered to a plant site and conclude with product shipped from the mill. The growth, harvesting (or, in the case of waste paper, collection), and transportation of the raw materials are not included in this analysis. Nor are possible changes in product specification, such as reduction of basis weight (weight per unit area), brightness (change in the bleaching requirements), or strength (change in the selection of fiber used to make a product).

Energy and pollution considerations related to secondary converting operations (box or bag manufacture, printing, coating, etc.) are not included in this analysis because (a) these process steps are neither energy- nor pollution-intensive and (b) the converting operations are so numerous that they would be difficult to address within the scope of this program.

Because the industry is so diversified in terms of alternative process options as well as in the number of process steps required to make a finished product, we have used the following approach:

(1) Characterize the entire industry in terms of its energy usage and pollution characteristics;

(2) Identify within the major manufacturing processes those steps that are most energy- and pollution-intensive;

(3) Evaluate the status of emerging technology and changes in industry practice to determine in a qualitative manner their energy/pollution impact;

(4) Study in detail some of the more important developments that could significantly affect energy use and/or pollution consequences; and finally,

(5) Assess the implications of the analysis with respect to possible EPA programs.

The time and scope limitations of this study precluded the development of an all-inclusive list of process options and possible changes in industry practice. Rather, we relied upon our industry background and experience, industry contacts, and the guidance of the Project Officer and EPA technical advisors subjectively to select reasonably promising process options, with emphasis on near-term potential for adoption.

The analysis of the industry sectors and processes (steps 1 and 2 above) with regard to their energy usage and pollution characteristics provided some guidance in reducing the subjective nature of the selection process. Nevertheless, we recognize that the selection of process options for detailed analysis was ultimately subjective.

Possible alternatives for detailed technical/economic evaluation were subjected to the above criteria, and the following were recommended for consideration in this study:

- Alkaline-oxygen pulping
- Rapson effluent-free kraft process
- Thermo-mechanical pulping (TMP)
- Deinking of waste newsprint as a substitute for mechanical pulping
- Air drying and vapor recompression
- Displacement washing
- Oxygen bleaching

- Vapor-phase, high-consistency bleaching
- Solvent deinking
- Coated unbleached kraft board as a substitute for solid bleached sulfate (SBS) and recycled board
- All-kraft newsprint
- Dry forming of selected paper and paperboard products

After these process options had been discussed with the Project Officer and the EPA technical advisors, the first four were chosen for in-depth analysis.

In each studied example, the costs, energy requirements, and pollution characteristics of the current manufacturing techniques were identified as a basis for comparing its merit and, hence, the likelihood that the alternative process will be adopted. Energy and pollution characteristics of other processes that did not receive in-depth analysis are included in Appendix B of this report.

The overview of the pulp and paper industry is based on data for 1974, the last representative average year for the industry for which we had good statistical information. Recognizing that capital investments and energy costs have escalated rapidly in the past few years and have greatly distorted the earlier bases for making cost comparisons, we believe that the most meaningful economic assessment of the process technology can only be made by using 1975 cost data to the extent possible. Consequently, in estimating comparative operating costs of new and current processes, we have developed costs representative of the first half of 1975 using constant 1975 dollars. We have selected locations for modeled production facilities based on current representative industry geography. Note that regional variations in unit costs for labor, energy, etc., are reflected in the cost computations. Also note that wage rates may not agree with other published data, since we have used rates which are specific to operation or maintenance in the paper industry, and which are a composite of direct labor and shift supervision.

Furthermore, because site-specific conditions at an existing plant are likely to obscure the energy/pollution aspects of alternative technology, all economic cost comparisons between current and alternative technology are based on the assumption that a new plant is to be built. A scale of operation typical of current new-capacity installations has been used, which represents the constraints of technology, product demand, and material availability. Since the scale of operation has a significant effect on the unit cost allocation of fixed costs such as factory overhead, unit costs for fixed-cost items are not uniform for every process.

Finally, note that all operating cost comparisons include an entry for "return on investment." In this study we used a 20% pretax return on total capital (fixed plus working capital) to reflect the cost of capital to finance the studied processes.

II. FINDINGS, CONCLUSIONS, AND RECOMMENDATIONS

This section summarizes the findings, conclusions, and recommendations for the pulp and paper industry sector. The findings primarily concern the four process changes selected for detailed analysis (Section V), while the overall conclusions and recommendations are based upon the qualitative (Section IV) and quantitative (Section V) analyses of the process changes which are occurring in the industry.

In presenting the results of the analysis, we recognize that the quality of the reported estimates is highly variable; it is influenced by the commercial status of the emerging technology, and hence the amount of operating experience that has been accumulated. In reviewing each process change, we have reported its stage of commercial development as an implicit indication of the quality of the reported data.

A. FINDINGS

The quantitative findings of this study with respect to the four process changes that were analyzed in detail are summarized in Tables II-1 and II-2.

1. Alkaline-Oxygen (A-O) Pulping

The first commercial installation of the A-O pulping process is currently in the startup stage; if it is successful, its adoption by the industry could have some long-range beneficial effects, particularly the alleviation of much of the air and water effluent problems presently confronting conventional bleached kraft mills. Although it would have no significant effect upon solid waste characteristics, the TRS (total reduced sulfur) and the odor problem typically associated with the conventional kraft process would be eliminated, and the color problem associated with the conventional kraft pulping and chlorine/caustic bleaching processes would be reduced by about 50%.

On the basis of available data, the A-O process is not a direct substitute for the kraft pulping process, because the resultant product has inferior strength characteristics.* More promising areas of possible product/process substitution would be in applications for bleached chemical pulp

---

*While this report was in press, we learned that some initial mechanical difficulties during startup had been overcome and that current results are very encouraging. Bleached softwood A-O pulp may be strong enough to replace bleached kraft.

TABLE II-1

COMPARISON OF A-O AND RAPSON PROCESS WITH
STANDARD KRAFT SLUSH PULP
(New mill basis)

Item	A/O	Standard Kraft	Rapson Process
Plant Investment, incl. pollution control ($ million)	146	154	140
Operating Cost, incl. pollution control ($/ADT)	256	290	259
Purchased Energy (10^6 Btu/ADT)	4.3	7.4	2.1
Pollution Loads			
Water - Volume (10^3 gal/ton)	31	31	20
BOD_5 (lb/ton)	33	66	None
TSS (lb/ton)	66	66	None
Color (lb/ton)	150	300	None
Air Emissions			
Particulates (lb/ton)	146	200	200
TRS (lb/ton)	0	24	24

TABLE II-2

COMPARISON OF NEWSPRINT SLUSH PULP FURNISH
FROM DEINKING, RMP, AND TMP
(New mill basis)

Item	Deinked (330 tpd)	80% RMP 20% Kraft (1000 tpd)	95% TMP 5% Kraft (1000 tpd)
Plant Investment ($million)	24	81	67
Operating Cost ($/ADT) - Mechanical	159	86	106
Kraft	-	58	15
Total	159	144	121
Purchased Energy (10^6 Btu/ADT)	6.1	13.5	14.7
Pollution Loads			
Water Volume (10^3 gal/ADT)	4	8.6	4.4
BOD (lb/ADT)	25	46	49
TSS (lb/ADT)	180	85	89
Color (lb/ADT)	170	60	15
Air Emissions			
Particulates (lb/ton)	0	40	10
TRS (lb/ton)	0	5	1

(both kraft and sulfite) in which high strength properties are not essential. These potential applications comprise less than 50% of the total bleached chemical pulp usage.

In view of its current stage of commercial development, sufficient "hard" data are unlikely to be available within 2 or 3 years to assess the technical and economic viability of the A-O process. The single installation presently in the startup stage constitutes less than 0.5% of the total U.S. bleached pulp capacity; accordingly, any beneficial impact from its commercial development will not be felt within the next 3 years. Furthermore because of the extended lead time needed for the design and construction of a mill using new technology, the successful development of A-O pulping is likely to have only a minimal impact upon the industry within the next decade.

2. Rapson Effluent-Free Kraft Process

The first commercial installation of the Rapson effluent-free kraft process is presently under construction at the Great Lakes Paper Company in Thunder Bay, Ontario. The process is designed to produce none of the BOD, suspended solids, and color that characterize effluents from the chlorine/caustic bleaching system used with the conventional kraft process. (It does not affect the solid waste or air emissions, however.) The process maintains all the desirable physical characteristics of the product and reportedly can be retrofitted into existing kraft mills.

The technical/economic evaluation of the Rapson process indicates that it would provide significant energy and cost savings over conventional kraft pulping and bleaching methods. Further, since much of the overall water effluent associated with bleached kraft pulp manufacture originates in the bleach plant, the elimination of effluents from this source, as contemplated by the Rapson process, would cause a major reduction in the overall water effluent from an integrated kraft pulp and paper mill.

Should the first installation prove to be technically and economically successful, the new process could greatly alleviate the water pollution problems confronting a large segment of the U.S. pulp and paper industry. It might well be included in the design of all new bleached kraft pulp mills and retrofitted into existing ones as a more convenient and less costly way to avoid the color produced by traditional kraft pulp bleaching processes. The alternative color removal technique, lime treatment, entails a lower initial investment, but the potential annual savings with the Rapson process could return the additional capital expenditure in 1 or 2 years.

Results from the first commercial installation should be available within 2 or 3 years to validate the postulated benefits of the Rapson process. If the experimental results are confirmed, the process could be adopted by a significant portion of the bleached kraft industry within the next decade.

3. Thermo-Mechanical Pulping

Thermo-mechanical pulping (TMP) is one of three methods by which mechanical techniques (grinding) are used to reduce wood raw material to papermaking fiber; the other two are stone groundwood and refiner mechanical pulping (RMP).

TMP, a recently developed alternative technique, has been successfully demonstrated in a few commercial installations. Its greater application is assured because of overall cost savings in the manufacture of finished product. This results from the fact that the physical strength properties of TMP pulp are superior to those of conventional RMP. Most paper products are made from a blend of chemical and mechanical pulps; chemical pulps are stronger but more expensive than mechanical pulps, so papermakers use as much of the latter as they can without unduly weakening the product. The substitution of TMP for RMP permits a higher percentage of mechanical pulp and thus a lower cost.

The picture from an energy standpoint is somewhat different. In terms of energy intensivity, TMP and RMP are about equal, but both are higher than chemical pulp. As a result, the higher proportion of mechanical pulp that is made possible by the TMP process also slightly increases the amount of energy used in making the finished product.

Water pollution resulting from the manufacture of the finished product (made from a combination of chemical and mechanical pulps) is little affected by TMP, although the BOD load is slightly higher (about 20%) than with the conventional RMP process. Air emissions are not a problem with any of the mechanical pulping processes, so the industry's acceptance of the TMP process would not affect the characteristics of the mechanical pulping operation. However, as less chemical fiber would be required in the finished product, a smaller volume of air emissions would be produced in its manufacture.

The wider use of TMP could alter the disposal pattern of sawdust and shavings, which are part of the solid waste from a lumber manufacturing operation. These materials are presently burned for their heat value, sold as animal litter or, in some cases, used as cellulosic raw material in pulp manufacture. The higher pulp strength properties attainable via TMP vs RMP would permit greater use of these byproducts in higher-added-value applications.

Water pollution effluents could be affected by a significant modification of the TMP process--chemi-thermo-mechanical pulping (CTMP). In this process, small amounts of chemicals (1 to 2% caustic and sodium sulfite) are added to the wood chips prior to their mechanical attrition. The purpose of the chemical is to solubilize some of the organic adhesive that binds the papermaking fibers, thus facilitating their separation and maintaining maximum strength characteristics.

While there is little commercial experience to quantify the effect of CTMP on energy and pollution, it is reasonable to postulate that there would be a reduction in energy usage in the defibering operation and that additional dissolved organic material would appear in the water effluent stream. Further, it seems probable that the low quantity of organic materials (5-10%) and chemicals (1-2%) appearing in the water effluent would make it economically unattractive to burn the "spent liquor" to recover its heat and chemical value, as is normally done in "full chemical pulping." Unfortunately, sufficient data are not available at this time to quantify more precisely the pollution consequences of this variation of the TMP process.

4. Deinking of Old News for Newsprint Manufacture

The deinking of old news for newsprint manufacture is a well-established commercial practice. It uses only about 25% as much energy as that required for the alternative manufacturing processes used to produce the combination of chemical and mechanical pulps present in deinked pulp. Our contacts with mills that plan to install deinking facilities indicate that they expect no problems in complying with water effluent emission regulations; thus, there appears to be no potential conflict with the regulations as the result of broader application of deinking. Further, since the amount of chemical fiber that is added to the deinked fiber in the manufacture of recycled news may be reduced or entirely eliminated, air emissions associated with the production of kraft pulp* would be much less of a problem in recycled newsprint manufacture.

With regard to solid waste, the use of deinking would entail no significant change at the plant site; the benefit that would accrue from recycling newsprint would be to alleviate the solid waste problem facing major metropolitan areas. Waste paper constitutes 30-40% (by weight) of our total municipal solid waste, and about 15% of the waste paper is newsprint. Accordingly, the deinking of old news could make a measurable reduction in the amount of solid waste in cities.

B. CONCLUSIONS

(1) The unit energy** requirements for the manufacture of the industry's products are being reduced through a variety of means. These include simple monitoring and closer attention to energy usage (housekeeping), as well as the application of well-established process techniques which were not economically feasible when energy costs were significantly lower.

---

*There are alternative methods for making chemical fiber that do not have an air emission problem, but the quantity of these materials used is much smaller than that of kraft pulp in this application.

**Unit energy, as used here, means the energy required per ton of the industry's finished or interim products.

(2) The unit energy requirements for purchased energy are likely to decrease faster than the total unit energy for the production of the industry's products. The sharper decline of purchased energy results from (a) greater utilization of residue fuels, such as bark, forestry waste, and "black liquor," (b) more on-site power generation, and (c) the decline of products made in nonintegrated paper mills, where there is little opportunity for energy recovery from the combustion of residue fuels. On-site power generation has always been practiced by major producers; at today's high cost for purchased power, on-site power generation by smaller producers has become more attractive.

(3) Major process changes being implemented (or contemplated) by the industry will alleviate many of its air, water, and solid waste emission problems. This is not a coincidence; the process changes and/or changes in industrial practice have often been prompted by the industry's effort to comply with effluent regulations in the past decade. Thus, major process changes, such as alkaline-oxygen pulping and the Rapson effluent-free kraft process, which are in the commercial development stage, are the result of developmental work begun 5 to 10 years ago in anticipation of effluent regulations.

(4) Few, if any, process changes have been instituted simply to save energy, although this has often been a result. Some process changes are implemented by industry even though they may be more energy-intensive than the current practice, so long as the total delivered cost is reduced by the new technique. The growing use of thermo-mechanical pulp (TMP) instead of conventional mechanical pulp in the manufacture of newsprint is an example of an alternative process technique that is more energy-intensive than current practice; TMP is being adopted because it results in a lower delivered cost for the finished product. Because TMP is stronger than refiner mechanical pulp, less chemical fiber would be required in the manufacture of the finished product; therefore, adoption of TMP would conserve wood.

(5) A number of process changes with significant potential for energy saving have not been included in the changes selected for detailed analysis--notably alternative drying techniques and displacement washing.

Drying is by far the single largest consumer of purchased energy in the entire pulp and paper manufacturing process. A number of new drying techniques are in the development stage, but we have discussed them in only a qualitative way because (a) the developments are not likely to reach large-scale commercial use within the next decade, and (b) we believe that the process change would not have a significant effect on the environment.

Displacement washing has also been discussed in a qualitative manner but not included for detailed analysis, because other developments in pulping and recovery were judged to be more significant from an energy/pollution standpoint. This process has achieved commercial status in a few installations, and its use during the next decade is likely to be significant.

Similarly, we have identified and evaluated other process changes in a qualitative manner. The above two are singled out because the potential energy savings realized by their commercial development would be significant.

Other process changes may also have important energy-saving potential and beneficial impact upon the environment, but their early stage of development does not permit us to predict the results as confidently as for the more advanced developments.

C. RECOMMENDED AREAS FOR RESEARCH/DEMONSTRATION

(1) The Rapson effluent-free kraft pulping process is the most significant and imminent process industry change from the standpoint of major energy and pollution implications. Therefore, EPA should encourage its development by participation and, if necessary, providing support in bringing it to commercial fruition.

(2) The alkaline-oxygen (A-O) process would apply to a much smaller segment of the industry and thus lacks the potential impact of the Rapson process in terms of reducing the industry's pollution problems. However, the Rapson process would alleviate only the water effluent problems, while the A-O process would alleviate both the air and water pollution problems presently associated with the major alternative manufacturing method--namely, kraft pulping and bleaching. We believe that EPA should participate in joint evaluation of this process.

(3) The thermo-mechanical pulping (TMP) process is well established. While it may be beneficial to obtain more precise analytical data on its energy usage and pollution characteristics, all reports to date indicate that (except for a 20% higher BOD load than with the conventional RMP process) there is no significant difference between the current and "new" technologies with regard to energy usage or pollution.

Hence, the TMP process does not warrant as much encouragement and assistance in commercial evaluation as the two previously listed process changes or the modification of the TMP process (chemi-thermo-mechanical pulping--CTMP). Because CTMP offers both significant advantages in increasing the available supply of pulpwood and an inherently greater pollution problem than any of the other mechanical pulping processes, an accurate evaluation of its commercial potential appears appropriate.

(4) The deinking of old news for the manufacture of newsprint presents an opportunity to save energy with no potential pollution problem. Broader commercial application should be supported, because it could reduce the amount of municipal solid waste.

(5) Alternative drying techniques and displacement washing appear to offer possibilities for significant energy savings with beneficial effects on industry emissions. The potential energy savings appear to be sufficiently attractive in paper drying to warrant further pilot evaluation of the more promising techniques. Displacement washing has reached commercial operation in a few installations, so it does not require further development effort; nevertheless, its impact upon energy and pollution considerations should be quantified to verify the postulated benefits.

(6) Other process changes that have been evaluated only qualitatively may also have significant potential for saving energy and benefiting the environment. We recommend that EPA and other appropriate government agencies determine the status of these emerging technologies through periodic reviews and encourage the more promising developments by participation.

III. INDUSTRY OVERVIEW

This section describes the various business and product sectors that comprise the overall U.S. pulp and paper industry. It provides some general information on the characteristics of the product sectors and their past and future growth patterns. An understanding of the fundamental business characteristics and possible future growth is important, since these factors influence the likelihood and rate of implementation of the changes in processes and industry practices that are discussed in Sections IV and V of this report.

Together with the description of each product sector, the principal factors that affect energy use and pollution control in that sector are mentioned. This subject is treated only briefly here, as the purpose is primarily to guide the reader to related portions of Sections IV and V where the effects of new technology on energy use and pollution are explored in greater depth.

Subsection D, which is an additional bridge between the product-oriented information of this chapter and the process-oriented information of Sections IV and V, describes the individual pulping processes and indicates the products made by each method.

Finally, Subsection E compares the amounts of energy used to make various pulp and paper products on both a unit and total annual basis, to indicate where the bulk of the energy is consumed and the relative efficiencies of the processes.

The information presented here has been compiled from related work performed by ADL for government agencies, published information, and "in-house" data. Further details of these aspects of the industry are given in Appendix A, "Supply/Demand by Product Sector."

A. INTRODUCTION

The pulp, paper, and allied products industry encompasses the production and sale of pulp derived from wood and other fibrous raw materials, the manufacture of paper and paperboard products from pulp and waste paper, and their conversion into end products such as boxes, writing paper, and sanitary tissue. Among all U.S. industries, it is the fourth largest purchaser of electricity and fuels (Table III-1) and the third largest user of water (Table III-2).

U.S EPA Headquarters Library
Mail code 3404T
1200 Pennsylvania Avenue NW
Washington, DC 20460
202-566-0556

TABLE III-1

LARGEST INDUSTRY CONSUMERS OF FUELS AND ELECTRIC ENERGY FOR HEAT AND POWER, 1971

Major Industry Group	Purchased Fuels and Electric Energy (billion kWh equiv.)
Chemicals and Allied Products	814.2
Primary Metal Industries	717.8
Petroleum and Coal Products	467.0
Paper and Allied Products	385.5
Stone, Clay and Glass Products	382.4
Food	302.2
Transportation Equipment	113.7
Machinery, excl. Electrical	101.6
Textile Mill Products	106.6
Fabricated Metal Products	103.1

Source: 1972 Census of Manufactures

TABLE III-2

LARGEST INDUSTRY CONSUMERS OF FRESH WATER, 1973
(billions of gallons)

Major Industry Group	Annual Consumption
Primary Metal Industries	4396
Chemical and Allied Products	2927
Paper and Allied Products	2295
Petroleum and Coal Products	639
Food and Kindred Products	628
Transportation Equipment	220
Stone, Clay and Glass Products	179
Textile Mill Products	~175
Machinery, excl. Electrical	158
Rubber and Miscellaneous Plastics Products	150

Source: "Water Use in Manufacturing," 1972 Census of Manufactures, U.S. Dept. of Commerce

Most of the water used by the industry is for processing of wood pulp: it is the medium for carrying the pulp to produce paper and paperboard. Since this water is intermingled with the products made by the mills, water pollution is a concern. Odors from kraft pulp mills also create a significant air pollution problem, and the power boilers used in many installations are large enough (over 250 million Btu/hr) to be affected by the EPA restrictions on particulate emissions.

The paper industry is also characterized by extensive vertical integration and is highly capital-intensive; as shown in Table III-3, it ranked ninth in capital intensity among all U.S. industries in 1974. Because of these facts, and because such large sums are required for new facilities, the industry is slow to change its practices and processes. Minor process changes are made if they can be retrofitted into existing facilities without large expenditures of fixed capital, but opportunities for major changes usually arise only when new capacity is added.

TABLE III-3

SALES TO ASSETS RATIOS FOR SELECTED MANUFACTURING INDUSTRIES
(Second quarter, 1974)

Major Industry Group	Sales/Assets
Petroleum and Coal Products	1.15
Instruments and Related	1.16
Machinery, except Electrical	1.28
Chemicals and Allied Products	1.30
Stone, Clay and Glass Products	1.35
Nonferrous Metals	1.36
Electrical and Electric Equipment	1.42
Iron and Steel	1.42
Paper and Allied Products	1.43
Transportation Equipment	1.51

Source: Quarterly Financial Report for Corporations, Federal Trade Commission, July 1974.

The first U.S. mills were in New England; thus, the older, smaller, and nonintegrated mills tend to be located in the Northeastern and North Central states, while the newer, larger, and integrated mills are in the South and Pacific Northwest. About 64% of the industry's pulping capacity and 49% of its papermaking capacity are now located in the South. Table III-4 more specifically indicates the geographic distribution of U.S. mills by process category in 1973.

B. GENERAL ECONOMIC CHARACTERISTICS

The future growth of the paper industry directly affects the extent of changes that are made in processes and practices, because the installation of new capacity provides the principal opportunity for such changes. This section briefly discusses the future growth in terms of growth opportunities for major product sectors; subsequently, we relate these to the relevant manufacturing processes. This translation is necessary because effluent guidelines and control measures vary according to the process involved, whereas growth opportunities are viewed on a product basis.

1. Demand

As a whole, the pulp and paper industry is mature, in that the demand for its products has grown at about the same rate as the GNP in real terms. There are some indications that the industry may grow slower than the GNP in the future because of recent rapid price increases, saturation of per capita consumption potential, and substitution by competing products. At the same time, entry to the industry and expansion of capacity are becoming more difficult, making it more likely that demand will be constrained by capacity and that paper prices will rise more rapidly than the all-commodity average.

Demand is best measured by U.S. consumption of paper and paperboard products (i.e., domestic production plus imports less exports). For most products, inventories are relatively small; in any case, there is little accurate information on inventory changes for paper products.

Table III-5 shows demand data for market pulp and the principal categories of paper and paperboard.* Data for 1973 are listed to illustrate the relative magnitude of the product categories, and projections to 1977 and 1983 show expected relative growths. Growth in the demand for paper and paperboard products is expected to drop to 3%, in contrast to 4.5% in 1960-1970, because of a slowdown in GNP growth, a tight supply/demand balance, and rapid price escalation.

---

*The product categories are not as numerous as those used by the American Paper Institute: we have combined or reaggregated some of the latter to facilitate the transformation from products to processes described in subsection D and in Table III-7 of this chapter.

TABLE III-4

NUMBER OF PULP AND PAPER MILLS BY PULP MANUFACTURING PROCESS

Region	Companies[1]	Establishments (incl. HQ units)	Paper Mills[2]	Pulp Mills (Total)	Groundwood	Other Mechanical[3]	Semimechanical	Sulphite	Kraft	Miscellaneous[4]
United States	412	953	761	411	64	71	45	32	119	80
New England		146	119	43	13	2	2	3	7	16
Middle Atlantic		213	156	39	6	9	2	1	4	16
East North Central		212	173	75	12	12	9	10	7	25
West North Central		31	25	18	5	6	2	1	2	2
South Atlantic		108	91	70	4	13	12	1	33	5
East South Central		53	47	42	6	6	6	-	21	3
West South Central		59	55	47	6	9	5	-	24	3
Mountain		9	7	5	1	-	-	-	3	1
Pacific		122	88	71	11	14	7	15	18	7

[1] Subsidiaries and autonomous divisions of parent companies are counted as separate units. Total reflects elimination of duplication of names in more than one state.

[2] Includes mills manufacturing paper and/or paperboard, regardless of the number of paper machines, and regardless of whether one or more pulp mills are located at the site.

[3] Includes steam and hot water defibrated, exploded, shredded, cold soda, and chemi-mechanical wood pulp mills.

[4] Includes deinking, rag, soda, rope, flax, bagasse, and cotton linters pulp mills

Source: Lockwood's Directory, 1974

TABLE III-5

PROJECTED U.S. DEMAND FOR PAPER AND PAPERBOARD

Product Sector	1973 (10^6 tons)	Average Growth (%/yr)	1977 (10^6 tons)	Average Growth (%/yr)	1983 (10^6 tons)
Market Pulp	5.0	4.3	5.9	3.8	7.4
Paper and Paperboard					
Containerboard	17.7	3.0	20.0	3.8	25.0
Folding Boxboard	7.7	2.0	8.3	2.0	9.4
Newsprint & Uncoated Groundwood Paper	12.2	2.6	13.6	2.6	15.8
Printing, Writing & Related	11.9	3.5	13.6	3.5	16.8
Tissue & Related	4.0	3.0	4.5	2.5	5.2
Industrial Packaging & Converting Papers	7.6	2.9	8.5	2.9	10.1
Construction Paper & Paperboard	5.9	3.5	6.9	3.5	8.5
TOTAL PAPER AND PAPERBOARD	67.0	3.0	75.4	3.0	90.8

Source: 1973, "Quarterly Industrial Report: Pulp, Paper, and Board," U.S. Department of Commerce, Domestic and International Business Administration, Bureau of Domestic Commerce, July 1974.
1977, 1983, Arthur D. Little, Inc. estimates.

2. Supply

The short-term supply potential in this industry can be measured by published capacity data for each major product group and for almost each pulp and paper mill. The product-group data are derived by the American Paper Institute (API) through annual surveys of current capacity and planned expansions. Comparisons of the capacity data with the industry's production data indicates average mill operating rates in each sector.

Some nuances must be recognized when interpreting capacity figures:

- Very few product sectors can operate at 100% of reported annual capacity, not only because capacity and demand fluctuate during the year, but also because the mills often fail to achieve the number of annual operating days on which their capacity figure is based.

- Reported capacity is also based on a specific mix of products; effective capacity can be increased by producing fewer grades (which lengthens production runs and cuts downtime for grade changes), or by increasing the thickness of the sheet (which reduces the operating time needed to produce a given tonnage).

- Operating rates in most sectors generally vary between 85% and 96% from year to year; many mills become unprofitable at annual rates below 85%.

Because of the time and costs associated with mill shutdowns and startups, all pulp and paper mills operate on a three-shift basis, and most run seven days a week. Over the short term, the supply can be increased by deferring maintenance downtime, or by concentrating on heavier weight products (which effectively increases production tonnage). Over the longer term, however, companies must either expand existing mills or build new ones.

The capital investment per employee has been rising rapidly and exceeded $60,000 in 1975. As a result, few new firms have entered the industry over the past ten years other than by acquisition of existing facilities. Also, the amount of capital now needed to build a new facility has served to inhibit the rate of growth of industry capacity. Most of the current expansion is being undertaken by the larger, more profitable firms that have the necessary capital resources and control sufficient woodlands to assure a continuing supply of wood raw materials.

C. CHARACTERISTICS OF PRODUCT SECTORS

This subsection provides a brief description of the major product sectors that make up the pulp and paper industry: market pulp, containerboard, folding boxboard, newsprint, writing paper, tissue, industrial packaging, and construction paper (board). More detailed information is given in Appendix A.

1. Market Pulp

a. Product Description

Market pulp is pulp that is sold rather than used internally by the producer. There are two principal kinds -- dissolving pulp and bleached paper-grade pulps. Market sales of other types of pulps (unbleached chemical pulps, groundwood pulp, and deinked wastepaper) are relatively small.

Dissolving pulps consist of highly refined, bleached sulfite or sulfate pulps with a high content of alpha or pure cellulose fiber. These pulps are used primarily as the raw material for rayon and acetate fibers, cellophane, and a variety of cellulose chemicals and specialty papers. This must be extremely free from dirt and other impurities. Many applications compete strongly with synthetic fibers and plastics.

The bleached and semi-bleached grades of kraft and sulfite pulp currently constitute about 86% of the total pulp purchased by U.S. mills that are not integrated or only partially integrated to on-site pulp production. The primary products produced by such mills are printing and writing papers, sanitary tissue, and related papers, mainly of a specialty nature. Part of the supply of bleached papermaking pulps is produced by some of the dissolving pulp mills. The paper-grade pulp mills, however, are not able to produce dissolving pulp without substantial reinvestment.

The chief function of the paper-grade pulps is to provide a white surface and sufficient strength to make the product usable. In both printing and tissue papers, hardwood and softwood pulps are blended to provide the desired properties of surface smoothness, opacity, softness, and strength. The short hardwood fibers are used to provide a smooth printing surface and opacity, while the long-fiber softwood pulps provide most of the required strength.

b. Factors Affecting Energy Use and Pollution Control

Within the bleached market pulp sector, several significant developments will affect future energy use and pollution control. These are mainly technological changes, such as the use of oxygen and closed systems, which are discussed in Sections IV and V.

The total energy consumed in pulp processes is expected to remain at or near the present level. However, the amounts of external or purchased energy used should decrease over time. Approximately 50% of the energy used in market pulp manufacture is now supplied by combustion of bark, wood wastes, and the organics extracted during pulping. Within the constraints of present technology, it appears possible to increase the contribution to about 70% by

collecting more waste wood, increasing on-site generation of power*, using recovery boilers, and adopting other conservation programs.

The largest source of pollution within this product sector is bleach plant effluents; these consist of dissolved organics, some liquor and cellulose, and concentrations of chemical salts. Changes in the basic system to reduce pollution loads, such as the use of oxygen bleaching systems, have been demonstrated. At least two are in commercial operation, and another one or two are scheduled to come on stream shortly.

Also, the technology for a completely closed, no-water-discharge bleaching system has been developed by Rapson and others. The first commercial installation of this system is being constructed in Canada. If the commercial operation performs as expected, it will significantly reduce bleach plant effluents. Rather than add color removal as an end-of-pipeline treatment step, companies may elect to make internal revisions (such as included in the Rapson process) that would alleviate the color removal problem.

2. Containerboard

The corrugated box (or shipping container) and its components are the principal products manufactured from containerboard. Most corrugated boxes are made from a sandwich of linerboard and corrugating medium; the latter is fluted and glued between layers of linerboard to help increase the overall structural strength of the box.

Containerboard is one of two primary paperboard product categories in the U.S. paper industry, the other being folding boxboard. Its production exceeded 16 million tons in 1974, which was more than half the tonnage of all paperboard produced in the United States.

a. Product Description

The containerboard sector includes all the paperboard materials used in the manufacture of corrugated shipping containers -- namely, linerboard (made either from unbleached kraft pulp, waste paper, or a combination of both), corrugating medium (made from a combination of semi-chemical pulp and waste paper, or entirely from waste paper), and container chip and filler board (made entirely from waste paper). Unbleached kraft paperboard used in folding boxboard applications is discussed below in subsection 3. The characteristics and end-use criteria for each of these products are described below.

---

*On-site power generation typically uses a back-pressure turbine with two or three high-pressure steam extraction stages for power generation. The low-pressure ("back-pressure") steam may then be used in various process applications. Heat-to-power conversion efficiencies in a back-pressure turbine are typically about 4,000 Btu/kWh, whereas they are about 10,000 Btu/kWh in a condensing-type turbine. Utility companies that supply purchased power typically operate condensing turbines.

Since it is the surface layer of the corrugated sandwich, the chief function of linerboard is to provide the strength characteristics required of a corrugated container, chiefly resistance to bursting and crushing. Unbleached kraft linerboard produced in the United States (typically at a basis weight of 42 lb/1000 sq ft) fully meets accepted national standards for corrugated containers that are shipped by rail or truck across state borders.

The pulp furnish for recycled linerboard usually consists of recycled corrugated containers and container converting plant clippings. The short-fiber corrugating medium component of these containers (about 30% of the furnish), coupled with the fiber degradation which takes place in repulping, makes it necessary to increase the basis weight of recycled linerboard somewhat above 42 lb/1000 sq ft if it must match the strength of the typical 42-pound kraft linerboard.

The chief function of corrugating medium is to provide a low-cost material for imparting rigidity. Minimal tearing resistance and folding properties are required, since these properties are provided by the linerboard layers.

Semi-chemical corrugating medium is made from a high-yield, partially cooked pulp that employs a neutral sodium- or ammonia-base sulfite pulping liquor.

Recycled corrugating medium, as defined by the API, is fluting material containing more than 25% waste paper. In fact, most recycled corrugating medium is made entirely from waste paper of various grades, including waste news, old corrugated containers, and mixed waste paper. The most common basis weight for corrugating medium is 26 lb/1000 sq ft.

Container chip and filler board is used to form the partitions or to line the inside of a corrugated box. Chipboard is the major product in this category; consisting of paperboard that is lighter than 26 lb/1000 sq ft. It is employed either as single sheets or as the facing of corrugated materials used for interior packaging such as partitions, dividers, pads, and cushioning.

The only real competitive threat to corrugated containers has come from the use of heavy-gauge shrink plastic film. This film can be wrapped around a pallet of packages and then shrunk by the application of heat to hold the load securely. However, shrink film now competes only in limited applications. Little substitution of other products for corrugated containers has been achieved.

b. Factors Affecting Energy Use and Pollution Control

Within the containerboard sector, the manufacturing processes are standardized, and energy use and pollution control patterns are well established. Internal plant conservation programs are being implemented within the industry to reduce both energy consumption and the amounts of effluent requiring end-of-pipe treatment.

Mills that produce virgin-fiber-based materials are tending to increase their use of recycled fiber in the manufacture of linerboard. As they do so, energy use per ton of board in pulping will decrease. Also, the total pollution load from a given plant/product cycle should decrease.

As with other board products, drying on the paperboard machine consumes large quantities of energy. While significant efforts have been devoted to reducing this, no breakthroughs have yet been achieved.

3. Folding Boxboard

Folding boxboard is one of the two primary paperboard product categories in the U.S. paper industry, the other being containerboard. This product sector accounted for nearly 30% of 1973 paperboard production and about 15% of the total tonnage of paper and paperboard made in that year.

a. Product Description

The folding boxboard sector consists of two dissimilar products: (1) bleached paperboard or solid bleached sulfate (SBS) board and (2) recycled paperboard. Each of these products is made by a different process and generally serves specific segments of the folding boxboard market. In those limited applications where SBS board and recycled board compete, the choice usually depends on the strength-to-weight ratio and its impact upon competitive costs.

SBS board and bristols* have been combined for this report because, while they are sold to totally different markets, they are generally produced in the same mills. Thus, the capacity utilization rates of the suppliers reflect the demand levels for both products.

SBS is by far the larger volume and faster growing product; its production totalled about four million tons in 1973 and 1974. It is used almost entirely to produce folding cartons and paper cups, plates, and trays. SBS board is produced from a combination of fully bleached hardwood and softwood pulps made by the sulfate or kraft process. Most of this board is coated with clay pigment and/or polyethylene film to enhance its printing characteristics and/or barrier properties.

Production of bleached bristols amounted to about 1.1 million tons in 1973 and 1974. Principal applications are tabulating and index cards, file folders, and tags. In contrast to SBS, these products are usually made from semi-bleached pulp and are uncoated. Demand for bristols has been essentially static since 1969, primarily because of declining use of tabulating cards as newer business machines make greater use of tape input/output and have larger internal memory banks.

---

*A broad range of bleached or semi-bleached paperboards 6 mils or more in thickness. Unlike SBS, bristols can be made on a cylinder machine as well as a Fourdrinier and may contain some secondary fiber.

Recycled paperboard is generally made from mixed grades of waste paper. The folding type is usually pigment-coated or lined with bleached or deinked pulp to enhance its appearance and printing characteristics. The setup or nonfolding type, which is heavier and stiffer, is seldom coated or made with a white liner but often has a coated paper outer liner. Its principal applications are shoe boxes, department store boxes, and hardware boxes.

Solid bleached board and recycled board are by far the most important boxboard grades, accounting for about 95% of total 1973 production.

b. Factors Affecting Energy Use and Pollution Control

Energy use and pollution control in the boxboard sector must be considered within the context of the two primary products, SBS and recycled. SBS uses bleached or semi-bleached pulp as its primary raw material, and recycled uses waste fiber; hence, two different manufacturing processes are involved.

The major factors affecting energy use and pollution control in the SBS subsector are technological changes in pulping and bleaching, which are discussed in detail in Sections IV and V.

Within the recycled subsector, the drying of the paperboard is the largest energy-consuming process. As mentioned earlier in this section, there is limited opportunity to reduce this consumption except by in-plant conservation efforts.

The use of waste fiber implies less overall pollution load on the total environment. Within the mill, the trend is toward greater reuse of water and hence less end-of-pipe treatment.

4. Newsprint and Uncoated Groundwood Paper

a. Product Description

Newsprint and uncoated groundwood paper are grouped in this sector because they utilize a substantial proportion (usually greater than 50%) of groundwood pulp in their fiber makeup, and they are often produced in the same mill. In addition, both products are uncoated and are used in printing applications that do not require archival properties, since groundwood pulp discolors when exposed to ultraviolet light. Thus, they are used for products such as newspapers, telephone directories, some mail order catalogs, and other printed articles that are generally discarded within one year.

Newsprint is by far the largest major grade in this category; total U.S. consumption was about eleven million tons in 1974. It is generally made from a pulp furnish consisting of about 80% unbleached groundwood (West Coast groundwood pulp is often lightly bleached) and 20% semi-bleached kraft or unbleached sulfite pulp.

Three U.S. newsprint mills now produce newsprint entirely from waste newspapers. As a result of their successful market penetration, this recycling trend is likely to grow in areas with high population and plentiful supplies of waste paper.

Uncoated groundwood paper is generally made from a furnish consisting of 30-50% bleached chemical pulp and 50-70% bleached groundwood pulp. Its principal applications are for telephone directories, catalogs, paperback books, low-prices magazines, comic books, and general commercial printing.

b. Factors Affecting Energy Use and Pollution Control

The basic pulp used in the manufacture of newsprint and uncoated groundwood paper is mechanical pulp made by grinding wood against a stone or by refining chips to pulp in a thermomechanical or chip refiner system. Pulp yields from these processes typically exceed 95%; thus, the pollution load due to dissolved organics and bleaching chemicals is relatively minor, and the energy consumption per ton is higher than for the chemical pulps used in containerboard and market pulp.

The increasing use of recycled news in making newsprint is reducing the overall energy usage of the industry and the pollution loads resulting from the process. Both standard groundwood and thermomechanical pulps require large inputs of energy.

The use of recycled fiber requires deinking of the old newspapers before they can be reformed into new paper. Thus, although waste paper is removed from the overall environment, the paper mill must contend with an increased pollutant load from inks and the chemicals needed to remove them.

In the virgin-fiber-based newsprint or uncoated groundwood mills, inplant water reuse and conservation programs are the most practical methods for reducing end-of-pipe pollution costs.

5. Printing, Writing, and Related Papers

a. Product Description

The printing, writing, and related papers sector consists of four product groupings: coated printing paper, uncoated book paper, converting paper, and writing and related papers. Bleached bristols, which are normally included in this sector, have been included in the boxboard sector, since they are produced in bleached paperboard mills. All of the printing-writing papers employ bleached pulp and are used primarily for printing, publishing, stationery, and a variety of paper converting applications.

Two-side-coated printing and converting paper is used primarily for magazine and textbook printing. The kind used in magazines, which constitutes about 70% of the volume, utilizes a groundwood-content base paper containing about 50% groundwood and 50% chemical pulp. Textbooks and publications such

as corporate annual reports and advertising brochures generally utilize a 100% chemical pulp base sheet. The coated-one-side papers are generally used for labels and packaging wraps, such as on cans; these generally utilize a 100% chemical pulp base sheet.

Uncoated book paper is used for many applications in addition to book printing. These include a wide variety of commercial printing applications that require uncoated paper as well as the paper used to produce envelopes and tablets. These papers are differentiated from the uncoated groundwood papers in that they contain no more than 25% groundwood pulp in their furnish.

Writing and related papers are primarily used for business writing papers, stationery, and business forms. Forms bond for computer printing and a variety of other business forms is the largest grade in this category, accounting for over 25% of 1973 production. The cotton-fiber papers have furnishes containing 25% or more of cotton, rags, linters, flax, or similar fibers; they are more expensive than the chemical wood pulp writing papers and hence are used in higher-value specialized applications, such as chart papers and special stationery. Thin papers include carbonizing tissue, condenser tissue, cigarette paper, pattern paper, and the like.

b. Factors Affecting Energy Use and Pollution Control

In addition to the factors discussed under market pulp, the printing and writing paper mills must deal with the pollution loads associated with starch and other paper machine additives as well as wastes from coating and other surface treatments.

Aside from the energy usage factors in the pulp mill, the drying of paper is the most significant energy consumption process: more than two pounds of steam are needed to dry each pound of paper. While such improvements as "through dryers" have been discussed for use by the industry, no technological developments are currently anticipated which will change the well-established patterns of energy use in this product sector.

6. Tissue and Related Papers

a. Product Description

The tissue sector of the pulp and paper industry includes both sanitary and nonsanitary grades of tissue paper that are sold to consumer and industrial market sectors. Sanitary tissue grades include bathroom and facial tissue, napkins, towels, and wipers. Nonsanitary tissue grades including waxing, wrapping, and cellulose wadding tissues. Sanitary tissues accounted for about 94% of total 1974 tissue production.

All of the above tissue grades are usually made from a combination of various bleached pulps, including sulfite and kraft (both softwood and hardwood), small amounts of groundwood pulp, and deinked or high-grade waste paper. Thin papers, such as carbonizing tissue and condenser tissue, are not included in the tissue paper sector but rather in the printing, writing, and related papers sector.

b. Factors Affecting Energy Use and Pollution Control

Once again, the most significant factors affecting energy usage and pollution control are the drying of the paper and the water used in processing.

Through drying is beginning to replace drying against steam-heated cylinders within the tissue sector, and this could result in some energy savings. However, as with other sectors, better housekeeping and water conservation practices are providing substantial savings.

7. Industrial Packaging and Converting Papers

a. Product Description

The industrial packaging and miscellaneous converting paper sector consists of three major categories:

- Unbleached kraft paper, used primarily for wrapping paper, shipping sacks, multi-wall bags, and grocery sacks and bags;
- Bleached kraft packaging papers, which are utilized for a variety of specialty wrapping, bag, and food carton inner-wrap applications; and
- Other converting paper and paperboard applications, including special industrial paper, tube, can and drum paperboard, and other specialty recycled paperboard applications.

Unbleached kraft paper is closely tied to the containerboard sector, since these products use the same type of pulp, i.e., primarily unbleached softwood kraft. Plastic film has made some penetration into the markets traditionally served by unbleached kraft sack paper.

Bleached packaging and industrial converting papers have highly fragmented end uses. Products such as glassine, greaseproof, and vegetable parchment are used as inner linings for packages (e.g., dry cereal and cake mixes), specialty bags, and many other products. They are produced from a variety of bleached and unbleached softwood kraft and softwood sulfite pulps. Substitution by plastics has been even more substantial here than with unbleached kraft paper and is likely to continue.

The special industrial paper category comprises many paper and paperboard grades designed for specialized end uses such as abrasive paper, absorbent paper, cable paper, electrical insulation, vulcanized fiber, and resin impregnating stock. The tube, can, and drum paperboard category consists of products made from recycled fiber. The special combination paperboard category includes tags, file folders, match stems, table backs, etc.

b. Factors Affecting Energy Use and Pollution Control

The factors affecting this sector are similar to those discussed under the bleached pulp and containerboard sectors.

8. Construction Paper and Paperboard

a. Product Description

The construction paper and paperboard product sector consists of a number of fibrous materials that are primarily used in the building industry. For the purposes of this discussion, the group is divided into three categories - construction paper, gypsum linerboard, and hardwood/insulation board.

- Construction paper includes sheathing paper, felts (roofing, floor covering, automotive, sound deadening, industrial, pipe covering, refrigerator, etc.), asbestos and asbestos-filled paper, and flexible wood-fiber insulation. Except for asbestos paper, these materials are usually made entirely of waste paper. Almost all forms of construction paper are intermediate products that are further converted before use.

- Gypsum linerboard, another intermediate product, is the facing material on gypsum wallboard. It is made entirely from waste paper. Gypsum wallboard is used chiefly for interior walls and as a base for plaster.

- Hardboard and insulation board are quite dissimilar to the other products in this sector. Both use a defibrated wood pulp that is formed into mats or pressed to a pre-determined density. Insulation board (low density) is used for sheathing and similar applications; hardboard (medium to high density) is used in paneling and cabinet backing.

b. Factors Affecting Energy Use and Pollution Control

In the construction paper and paperboard sector, the paper mills generally operate with a nearly closed water system. Although the pollution loads are high in BOD, suspended solids, and the like, the volume is lower than in the rest of the paper industry. Depending on product mix, there does seem to be opportunity to recycle all the water used.

Once again, the energy consumed in drying the product is the most significant use; little change is expected in this area.

D. PROCESS/PRODUCT RELATIONSHIPS

Because the energy and pollution considerations for each alternative pulp and paper manufacturing process are different, an understanding of the process-to-product transformation is essential. Table III-6 summarizes the key characteristics of the alternative pulping processes and the products produced by each. The production figures reveal the dominant role of the kraft pulping process in relationship to the total industry production. Clearly, any significant change in kraft pulping technology would affect the characteristics of the industry. The soda pulping process, on the other hand, constitutes a minor segment of the industry's production; changes in this

TABLE III-6

COMMERCIAL PROCESSES FOR PULPING WOOD

Pulp Classification	Name of Process	Process Description	Woods Used	Yield[a] of Pulp by Weight, bl/unbl (%)	Strength of Pulp[b]	How Pulp is Used	Final Product	U.S. Production 1973[a,c] (000 tons)	Minimum mill capacity[a] (tpd)	Cost of Pulpmill[a] ($000/tpd)	Number of pulp-mills[a] in U.S. 1973
Chemical	Sulfite	Woodchips reduced under steam pressure to pulp with an acid chemical (calcium, magnesium, sodium, or ammonium bisulfite plus sulfurous acid)	Softwoods: Spruce, Balsam, Hemlock, Southern pine Hardwoods: Eastern and Lake States	44/49 44/49	Softwoods, medium high Hardwoods, medium low	Usually mixed with other pulps. When purified, used for cellulose products.	Book and magazine, Wrapping, Bond, Tissue, Newsprint, Glassine, Writing, Cellulose derivatives	2,300[d]	400	150-180	28
	Kraft	Woodchips reduced under steam pressure to pulp with alkaline chemicals (sodium hydroxide and sodium sulfide).	Softwoods Hardwoods	42/49 44/49	Softwoods high to very high, hardwoods medium to medium high	Higher yield pulp used for container board. Lower yield pulp used for numerous grades of paper. Often mixed with other pulps.	Strong wrapping and bag paper, Container board, Book, Newsprint, Highest grade magazine and other printing papers, Bond, Writing	32,443[d,e]	Bleachable grade, 600 Kraft grade, 400	100-180	114
	Soda	Woodchips reduced under steam pressure to pulp with an alkaline chemical (caustic soda).	Mostly Hardwoods: Aspen, Cottonwood, Basswood, Beech, Birch, Maple, Tupelo (gum), Oak	40/48	Medium to medium low	Often mixed with sulfite and other pulps	Book and magazine, Lithograph, Other printing papers, Envelope, Blotting paper	136	-	-	3
Semichemical	Neutral sulfite, bisulfite, acid sulfite, kraft	Woodchips, partially softened under steam pressure with chemicals, are reduced to pulp by mechanical action.	Hardwoods: Same as for soda pulp, Red Alder, Often pulped in mixtures Softwoods: Small amounts of Douglas fir, Ponderosa pine and sugar pine	-/60-80 60/80	Medium to medium low	Alone in corrugating and some other boards. Bleached pulps mixed with softwood pulps for other products.	Corrugating board, Food and other specialty boards, Glassine, Magazine, Newsprint, Insulating and sheathing board	3,868	300	80-100	40
Dissolving[a]		Woodchips reduced under steam pressure to pulp with acid or alkaline chemicals	Softwoods: Spruce, Hemlock, Southern Pine	30-35	Low	Pre-hydrolysis sulfate pulp used for rayon	Rayon	1,672	600	200	10

TABLE III-6

COMMERCIAL PROCESSES FOR PULPING WOOD (Cont.)

Pulp Classification	Name of Process	Process Description	Woods Used	Yield[a] of Pulp by Weight, bl/unbl (%)	Strength of Pulp[b]	How Pulp is Used	Final Product	U.S. Production 1973 [a,c] (000 tons)	Minimum mill capacity[a] (tpd)	Cost of Pulpmill[a] ($000/tpd)	Number of pulp-mills[g] in U.S. 1973
Chemimechanical	Mason (exploded) Asplund (defiber-ated)	Woodchips treated with steam or hot water at high temperatures and pressures to soften the wood, followed by mechanical fiberization.	Softwoods and hardwoods	-/80-95	Low to very low	Coarse pulps composed of a mixture of single fibers and fiber bundles used alone and mixed with wastepaper and other pulps	Hardboard Insulating board Roofing and linoleum felts	2,930	50	60-80	61
	Cold soda	Woodchips given mild treatments with sodium hydroxide solutions and then mechanically fiberized to pulp	Hardwoods: Birch Maple Beech Oak Sweetgum Aspen Often pulped in mixtures	80/95	Medium low to low	Often mixed with other pulps	Corrugating board Boxboard and molded products Book paper and newsprint	100	-	-	3
	Hot Sulfite	Woodchips given mild treatments with sodium sulfite solutions and then mechanically fiberized to pulp.	Softwoods: Balsam Fir Hemlock Spruce Hardwoods: Birch Aspen and others	80/95	Medium to medium low	Mixed with groundwood and sulfite pulps	Book paper	70	50	60-80	4
Mechanical	Groundwood	Wood bolts reduced to pulp by pressing on a revolving grindstone, or chips mechanically fiberized to pulp.	Softwoods: Spruce Balsam Pine Hemlock Hardwoods: Aspen Cottonwood	93/93 93/93	Low Low	Usually mixed with chemical pulp	Newsprint Magazine-book Catalog Tissues Toweling Carton board Container board Building board Insulating board	4,813	100	50-80	65

[a]ADL estimates

[b]A very general rating based on the full range of pulp strengths. Good strength in a pulp is desirable though not necessarily essential to its usefulness. Between two pulps otherwise comparable, the one with the better strength would be preferred.

[c]Except for kraft and sulfite, nearly every kind of pulpmill must be integrated with a paper or board mill, with excess production being offered for sale. Purified pulpmills and some large kraft mills produce pulp for market only. One or two small groundwood pulpmills produce market pulp only, but sales are limited to the local area.

[d]Does not include rayon and cellulose derivative grades.

[e]Does not include kraft semichemical.

[f]Recovery of spent sodium sulfite liquors now under commercial development. Minimum size of these new recovery plants not known; probably not less than 100 tpd of pulp. If semichemical pulp plants are integrated with kraft mills, their spent liquors can be processed in the kraft chemical recovery plant. Probably no limitation on the size of a kraft semichemical pulp plant if so integrated. A neutral sulfite semichemical pulp plant would be limited to a size equivalent to about 1/3 the liquor recovery capacity of the kraft mill. In either case, the integrated recovery system must have sufficient capacity to process the combined spent liquors from both plants.

Source: "Commercial Processes for Pulping Wood," Forest Products Laboratory, Forest Service, U.S. Department of Agriculture, 1966, updated by Arthur D. Little, Inc.

process would have a minimal effect upon the overall industry structure. Energy and pollution considerations in the major industry sectors are discussed in Section IV.

Table III-7 indicates in a quantitative manner (expressed as a percentage of the total industry production) the role of each pulping process in the industry's production. The dominant role of the kraft pulping process in each of the product sectors is again emphasized. The table also shows that there are alternative processes for making products in all the sectors. These two tables give an indication of both the variety of technology which is standard in the pulp and paper industry, and the considerable overlap between product lines and different types of technology.

E. ENERGY USAGE BY PROCESS/PRODUCT CATEGORY

In this discussion of energy usage, we consider pulping and papermaking separately. The reason is that the alternative pulping processes that can be used to make a given product may differ considerably from an energy standpoint but the papermaking processes do not. For example, the energy needed to pulp virgin fiber is much more than that needed to pulp secondary fiber (deinking), but the energy consumption in the papermaking operation is about the same regardless of which kind of pulp is used.

1. Pulping

The energy used in each of the major pulping processes is shown in Table III-8. As significant as the unit energy requirements is the total annual usage, which is a function of the amount of product made by each process.

Note also that some of the processes have greater potential than others for obtaining part of their energy requirements from residue fuel, i.e., by burning bark and "spent liquor." The heat obtained from the combustion of these once-discarded byproducts is called "recovered energy" and reduces the amount of energy that must be purchased. Thus, while the total unit energy requirement for kraft pulp manufacture is significantly greater than for either semi-chemical or mechanical pulp, the portion that is purchased per ton of product is significantly less in the kraft process. However, because the kraft process is by far the largest sector in the industry in terms of total production, it is also largest with respect to total annual purchased energy.

Within the kraft pulping process, the integrated and market pulp segments of bleached kraft are the largest; other segments, notably unbleached kraft and dissolving kraft, are comparatively minor.

TABLE III-7

PROCESS/PRODUCT RELATIONSHIPS - WOODPULP CONSUMED, BY TYPE, 1973
(Type of pulp consumed divided by U.S. product production)

Pulp Type	Newsprint & Un-Coated Groundwood	Printing & Writing Paper	Tissue Paper	Bleached Board And Bristols	Packaging Papers		Unbleached Paperboard	NSSC Paperboard	Recycled Paperboard
					Unbleached	Bleached			
Bleached Kraft	17.5%	54.6%	40.0%	100.5%	7.8%	86.2%	5.2%	-%	3.9%
Unbleached Kraft	Small	2.7	5.5	2.3	94.6	7.7	94.0	7.0	1.7
Bleached Sulfite	Small	8.9	20.8	1.4	-	7.4	Small	-	Small
Unbleached Sulfite	5.1	Small	1.5	Small	-	1.8	Small	-	Small
Groundwood	66.3	6.3	3.9	Small	Small	-	-	Small	1.1
Semi-Chemical	Small	3.2	2.3	Small	Small	Small	-	69.1	Small
Dissolving	-	Small	Small	-	-	Small	-	-	Small
Soda and Other Woodpulp	Small	6.2	1.6	Small	Small	Small	1.1	-	Small
Wastepaper	11.3	8.2	29.2	-	2.3	Small	2.9	23.5	107.3
Other Fibers	Small	Small	1.0	Small	-	Small	-	-	Small

Note: Most columns total over 100%, because it takes more than a ton of pulp to make a ton of paper. There are two principal reasons for this: (1) some fiber is lost during manufacture, and (2) a ton of air-dried pulp contains 10% moisture, but a ton of machine-dried paper contains only 5-8% moisture.

Source: Arthur D. Little, Inc. estimates based upon private correspondence with industry contacts

TABLE III-8

ENERGY USAGE FOR SLUSH PULP PRODUCTION, BY MAJOR PULPING PROCESSES
Basis: 1974 Production

		Unit Consumption (10^6 Btu/ton)			Annual Total (10^{12} Btu)		
	Production (000 tons/yr)	Total Unit Energy[a]	Recovered Energy[b]	Purchased Energy	Total	Recovered	Purchased
I. WOOD PULP							
A. Chemical Pulp Kraft							
Bleached and Semi-Bleached							
Integrated	10,800	27.0	15.0	12.0	292	162	130
Market Pulp & Dried Transfers[d]	4,700	27.0	15.0	12.0	127	71	56
Dissolving Pulp	800	32.0	17.0	15.0	26	14	12
Sub-total, Bleached and Semi-Bleached	16,300	27.0	15.0	12.0	445	247	198
Unbleached	16,980	18.0	14.0	4.0	306	238	68
TOTAL KRAFT PULPING	33,280	23.0	15.0	8.0	751	485	266
B. Chemical Pulp - Other							
Sulfite							
Integrated	1,610	21.0	10.0[c]	11.0	34	16	18
Market Pulp & Dried Transfers[d]	700	21.0	10.0[c]	11.0	15	7	8
Dissolving Pulp	970	28.0	17.0	11.0	27	16	11
Sub-Total, Sulfite	3,280	23.0	12.0	11.0	76	39	37
Semi-Chemical	3,790	15.0	1.0	14.0	57	4	53
TOTAL OTHER CHEMICAL PULPING	7,070	19.0	6.0	13.0	133	43	90
C. Mechanical Pulp							
Groundwood (Bleached & Unbleached)	4,490	15.0	1.0	14.0	67	4	63
Defibrated/Exploded & Other	3,380	4.0	0	4.0	14	0	14
TOTAL MECHANICAL PULP	7,870	10.3	0	8.6	81	4	77
II. WASTE PAPER							
A. De-inking	2,200	4.0	0	4.0	9	0	9
B. Non-deinking							
Old Corrugated Containers	5,700	4.0	0	4.0	23	0	23
News, Mixed, Pulp Substitute	6,300	3.0	0	3.0	19	0	19
TOTAL WASTE PAPER	14,200	3.6	0	3.6	51	0	51
TOTAL ALL WOOD PULP & WASTE PAPER	62,420	16.3	8.5	7.8	1,016	532	484

NOTES:

[a]Total unit energy based on estimated existing industry average 10% higher than new mill requirements.

[b]The purchased fuel equivalent of steam and power generated from spent pulping liquors, bark, and hogged wood. Recovery efficiency for existing industry average estimated at 90% of new mill efficiency.

[c]Recovered energy for sulfite mills based on heat recovery for 75% of existing paper-guide capacity and 100% of existing dissolving capacity.

[d]No drying included. Dried transfers refer to intra-company pulp shipments of market pulp.

Source: 1974 production, "Statistics of Paper and Paperboard,", American Paper Institute,1975; energy consumption, ADL calculations (see Section V and Appendix C for supporting energy balances)

Sulfite chemical pulping is the second largest user of energy. However, no new installations using sulfite pulping processes are now being made or contemplated. Moreover, related work that we have done for EPA* indicates that some of the existing sulfite mills will close for various market, technological, or economic reasons. Accordingly, we have not selected any of the process changes in sulfite pulping manufacture for detailed analysis; rather, we have concentrated upon the more significant and faster growing segments of the industry - the kraft and mechanical pulp sectors.

Figure III-1 is a graphical representation of the energy usage estimates in Table III-8 to facilitate comparison of the pulping processes.

2. Papermaking

Table III-9 shows the energy used in converting the intermediate product pulp, regardless of type, into paper and paperboard products. Note that the energy required to convert any of the various kinds of pulp into a specific grade of paper or paperboard does not vary significantly on a unit basis.

3. Total Energy Requirement

Table III-10 lists total energy requirements for both pulping and papermaking operations. It combines the process/product relationships previously listed in Table III-7 with the energy usage requirements from Tables III-8 and -9.

Industry reports of total energy usage are compared with ADL estimates, in Table III-11. For the sectors included in this analysis,** figures are in sufficient agreement with the ADL estimates (considering that they apply to different years) to indicate that the 1974 estimates and the realigned process/product relationships are not unreasonable. Regional patterns of fuel use in the paper industry are shown in Table III-12.

The unit energy intensivities of selected process/product combinations are shown graphically in Figure III-2. These estimates are based on new mills. When existing mills were built, less effort was made to conserve energy; therefore, we estimated the unit energy usage in existing mills to be 10-15% higher. The new-mill basis assumes the average energy utilization obtainable with current technology, not necessarily the best possible. These data are intended to provide a fair basis for comparison with new technology. The most important points to note are the following:

- The high purchased-energy requirement of nonintegrated paper production is due primarily to double-drying (i.e., drying of market pulp, rewetting, and drying of product).

*U.S. Environmental Protection Agency, "Economic Analysis of Proposed and Interim Final Effluent Guidelines for the Bleached Kraft, Groundwood, Sulfite, Soda, Deinked and Non-Integrated Paper Sectors of the Pulp and Paper Industry," EPA-230/2-76-045, January 1976.

**Reported estimates of industry energy consumption typically include paper converting operations, which are not considered here.

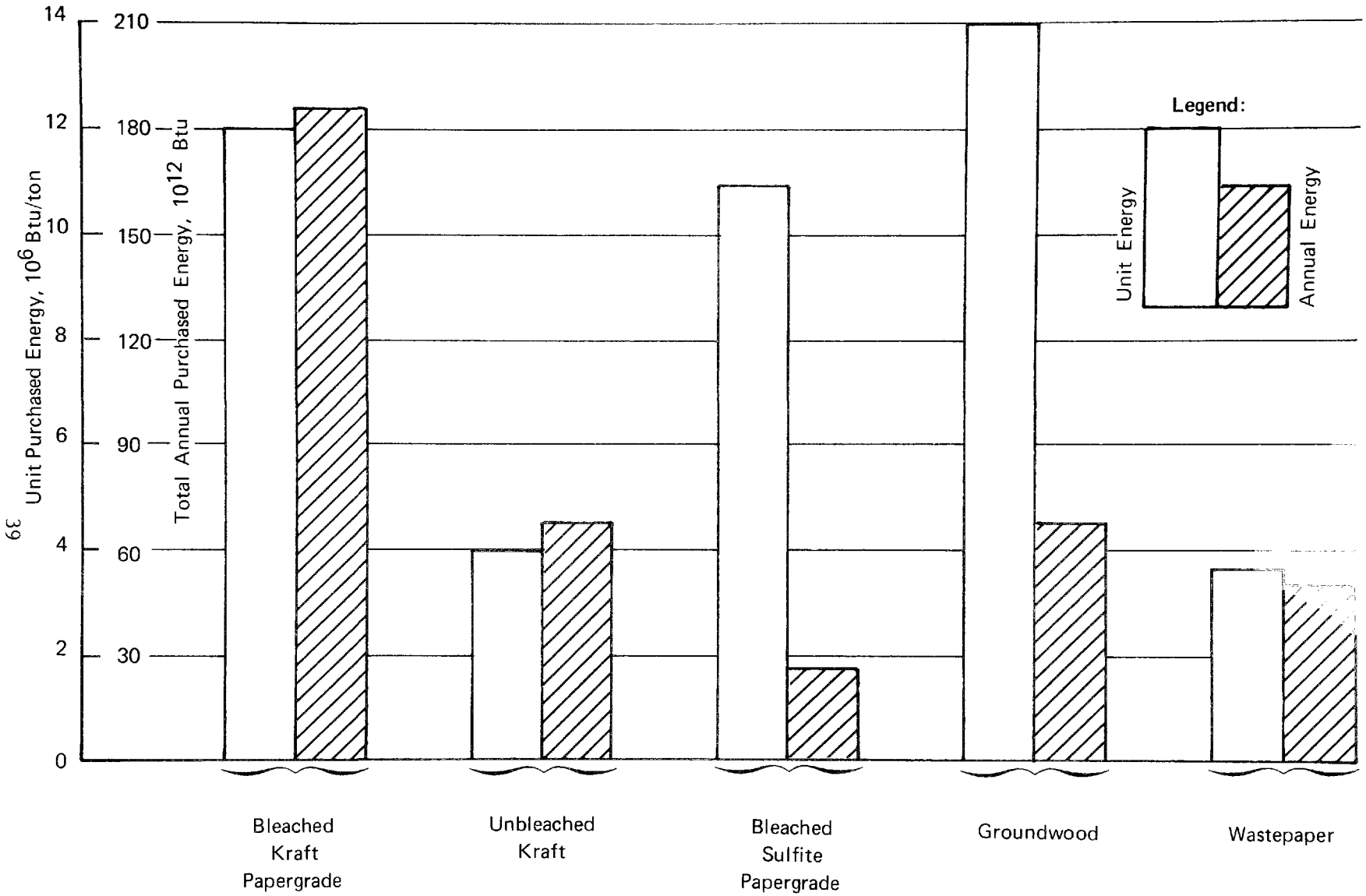

Source: Arthur D. Little, Inc., estimates.

Figure III-1. Unit and Total Annual Purchased Energy for Slush Pulp Production for Selected Pulping Processes

TABLE III-9

ENERGY USAGE FOR FORMING AND DRYING, BY MAJOR PRODUCT GRADE

	1974 Production (000 tpy)	Unit Consumption, (10^6 Btu/ton)			Annual Total (10^{12} Btu)		
		Steam & Extracted Power	Purchased Power	Total Unit Energy	Steam & Extracted Power	Purchased Power	Total Energy
Newsprint & Uncoated Groundwood	4,800	12.0	0.7	12.7	58	3	61
Printing and Writing	12,000	14.0	0	14.0	168	-	168
Packaging & Industrial Converting	5,940	15.0	0	15.0	89	-	89
Tissue and Toweling	3,900	11.0	1.5	12.5	43	6	49
Linerboard	13,200	13.0	0.5	13.5	172	7	179
Corrugating Medium	5,260	12.0	1.0	13.0	63	5	68
SBS Board	3,660	14.0	0	14.0	51	-	51
Recycled Boxboard	5,540	14.0	4.0	18.0	78	22	100
Construction Paper and Board	5,130	10.0	4.0	14.0	51	21	72
All other Paperboard	1,060	12.0	4.0	16.0	13	4	17
TOTAL PAPER AND BOARD	60,490	12.8	1.3	14.1	786	68	854
Dissolving Pulp	1,770	8.0	0	8.0	14	-	14
Market Pulp and Transfers	5,400	8.0	0	8.0	43	-	43
Nonintegrated and Waste Paper, various products	8,400	Incl. above	4.0	4.0	-	34	34
TOTAL PAPER, BOARD, AND MACHINE DRIED PULP	67,660	12.3	1.9	14.2	843	102	945
TOTAL PURCHASED ENERGY FOR SLUSH PULP, PAPER, BOARD AND MACHINE DRIED PULP	67,660	18.0	3.4	21.4	1,209	220	1,429

Source: 1974 Production, "Statistics of Paper and Paperboard," American Paper Institute, 1975; other data derived from energy and material balances in Section IV and Appendix C.

TABLE III-10

TOTAL ENERGY USAGE, BY MAJOR PROCESS AND PRODUCT GRADE

Product Grade and Pulping Process	1974 Production (000 tons)	Energy Usage, (10^6 Btu/ton) Slush Pulp Recov'd.	Slush Pulp Purch.	Drying (incl. Mkt. Pulp) Purch.	Total Purch.	Annual Total, (10^{12} Btu) Recovered	Purchased	Total
1. Newsprint and Uncoated Groundwood (80% Groundwood)								
Integrated to Kraft & Groundwood	2,700	3.6	13.6	12.7	26.2	10	71	81
Integrated to Sulfite & Groundwood	600	2.8	13.6	12.7	26.3	2	16	18
Integrated to Groundwood only	1,000	3.6	13.6	18.3	31.9	4	32	36
Waste Paper	500	-	4.5	16.7	21.2	-	11	11
TOTAL	4,800	3.3			27.1	16	130	146
2. Printing & Writing Papers								
Integrated to Kraft	5,500	15.0	12.0	14.0	26.0	83	143	226
Integrated to Sulfite	1,000	10.0	11.0	14.0	25.0	10	25	35
Integrated to Groundwood (65% Gwd)	1,100	6.0	13.3	19.5	32.8	7	36	43
Waste Paper	1,200	-	4.5	18.0	22.5	-	27	27
Nonintegrated (market pulp)	3,200	15.0	12.0	26.0	38.0	48	122	170
TOTAL	12,000	12.7			29.4	148	353	501
3. Packaging, Converting & Special								
Integrated to Bleached Kraft	300	15.0	12.0	15.0	27.0	5	8	13
Integrated to Unbleached Kraft	4,200	14.0	4.0	15.0	19.0	59	80	139
Waste Paper	500	-	4.0	19.0	23.0	-	12	12
Nonintegrated	900	15.0	12.0	27.0	39.0	14	35	49
TOTAL	5,900	13.2			23.4	78	135	213
4. Tissue and Toweling								
Integrated to Bleached Kraft	800	15.0	12.0	12.5	24.5	12	20	32
Integrated to Sulfite	500	10.0	11.0	12.5	23.5	5	12	17
Waste Paper	900	-	4.5	16.5	21.0	-	19	19
Nonintegrated (market pulp)	1,700	15.0	12.0	24.5	36.5	26	62	88
TOTAL	3,900	11.0			29.0	43	113	156
5. Linerboard								
Integrated to Unbleached Kraft	12,800	14.0	4.0	13.5	17.5	179	224	403
Waste Paper	400	-	4.5	17.5	22.0	-	9	9
TOTAL	13,200	13.6			17.7	179	233	412

TOTAL III-10

TOTAL ENERGY USAGE, BY MAJOR PROCESS AND PRODUCT GRADE (Cont.)

Product Grade and Pulping Process	1974 Production (000 tons)	Energy Usage, (10^6 Btu/ton) Slush Pulp Recov'd	Slush Pulp Purch.	Drying (incl. Mkt. Pulp) Purch.	Total Purch.	Annual Total, (10^{12} Btu) Recovered	Purchased	Total
6. Corrugating Medium								
Semi-chemical	3,800	1.0	14.0	13.0	27.0	4	103	107
Wastepaper	1,500	-	4.0	17.0	21.0		32	32
TOTAL	5,300	0.8			25.5	4	135	139
7. SBS Board								
Integrated to Bleached Kraft	3,700	15.0	12.0	14.0	26.0	56	96	152
8. Recycled Boxboard								
Wastepaper	5,500	-	4.0	18.0	22.0	-	121	121
9. Construction Paper & Board								
65% Defibrated, 35% Wastepaper	5,100	-	4.0	14.0	18.0	-	92	92
10. Other Combination Board								
(Groundwood, Market Pulp, Wastepaper)	1,100	4.4	9.0	18.0	27.0	5	30	35
11. Dissolving Pulp	1,800	17.0	12.8	8.0	20.8	31	37	68
GRAND TOTAL	62,300	9.0			23.5	560	1,475	2,035

Source: Tables III-7, 8, and 9

TABLE III-11

COMPARISON OF ADL ENERGY USAGE ESTIMATES WITH API REPORTED DATA
(10^{12} Btu/year)

Source of Energy	1972 Reported[a]	API Adjusted	ADL, 1974
Recovered Energy			532
Spent Liquor[b]	707	482	
Bark and Hogged Wood	148	148	
Purchased Power[c]	104	305	220
Purchased Fuel	1,195	1,195	1,209
Sub-Total, Purchased Power and Fuel	1,299	1,500	1,429
Total Energy Consumption	2,154	2,148	1,961

[a]"Patterns of Fuel and Energy Consumption in the U.S. Pulp and Paper Industry," American Paper Institute, March 1974.

[b]Reported figure was apparently based on assumption that entire heat content of spent liquor solids was recovered. Adjusted figure assumes 75% recovery, less another 10% to reflect the lower efficiency of existing mills.

[c]Reported figure was the theoretical Btu equivalent of kWh of purchased power (3412 Btu/kWh). Adjusted figure reflects approximately 30% conversion of heat input to delivered power (10,000 Btu/kWh).

TABLE III-12

REGIONAL PATTERNS OF FUEL USE IN THE U.S. PAPER INDUSTRY
(Basis: 1972 data by percent)

Region	Natural Gas	Oil	Coal	Purch. Elect.	Process Wastes	Other Fuels	1972 Year End Capacity: Paper & Board	1972 Year End Capacity: Pulp
N.E./Mid Atlantic	5.5	56.1	13.6	7.3	14.6	2.9	18.4	8.7
South	20.6	20.2	6.9	2.8	47.9	1.6	48.6	63.9
North Central	33.8	8.8	40.7	6.1	9.6	1.0	18.9	8.9
Mtn. Pacific/Alaska	22.9	13.3	0	9.8	40.6	13.4	14.1	18.5
TOTAL U.S.	20.9	22.0	11.1	4.8	37.1	3.5	100.0	100.0

Source: American Paper Institute, Patterns of Fuel and Energy Consumption, March 1974

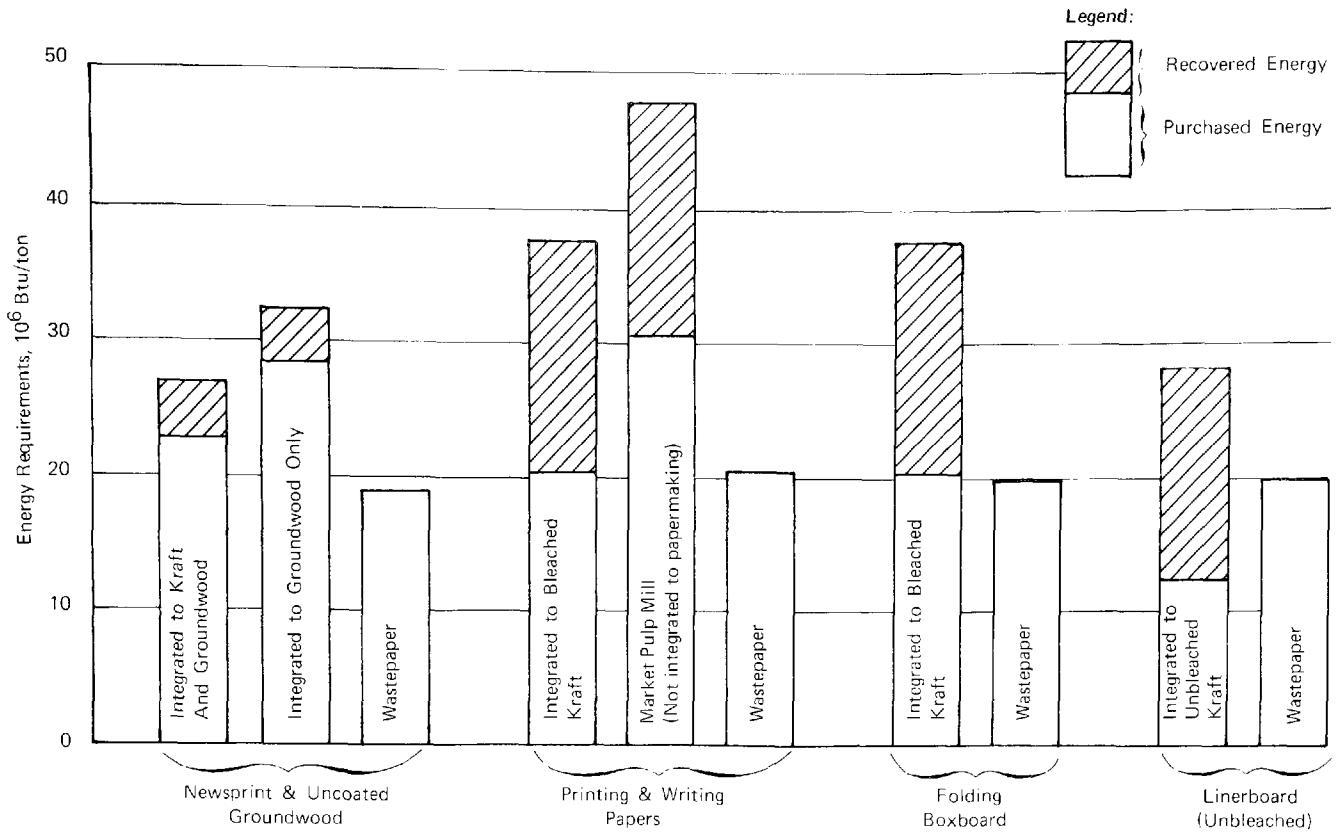

Figure III-2. Energy Intensivity for Selected Pulp and Paper Process/Product Combinations (New Mill Basis)

- Newsprint has a high purchased-energy requirement, even when fully integrated to both kraft and groundwood pulps.*
- Bleached kraft products require high total energy and relatively high purchased energy.
- Waste paper products require less total energy than any virgin fiber product, and the only products requiring less purchased energy are those integrated to unbleached kraft pulp.**

*For the groundwood portion of the fiber furnish used in newsprint, little or no steam is used, so no extraction power is available.

**See also E.L. Graminski, "Problems and Potentials in Paper Recycling," ASTM Special Publication 592, 1975, pp. 132-139.

NOTES TO TABLES III-8, -9, and -10

1. Fuel equivalent of process steam at 1,300 Btu/lb.

2. Fuel equivalent of extracted power at 4,000 Btu/kWh (conversion efficiency of back-pressure turbine).

3. Fuel equivalent of purchased power at 10,000 Btu/kWh (conversion efficiency of condensing turbine).

4. Purchased energy includes fossil fuel for process steam and extraction power, as well as purchased electric power.

5. Recovered energy from spent pulping liquors is based on an average of 12,000 pounds of process steam available per ton of slush pulp (air-dry equivalent at 48% unbleached yield, 42% overall yield) at maximum recovery boiler heat efficiency of 75%. In actual practice, a smaller quantity of higher energy steam could be generated for both extraction power and process steam. However, total fuel equivalent would be the same at 16 million Btu per air-dry ton of pulp.

6. Recovered energy is adjusted for average unbleached pulp yield in the various processes.

IV. PRELIMINARY EVALUATION OF PROCESS TECHNOLOGY

This section presents a preliminary evaluation of current and alternative process technologies used in the pulp and paper industry. A variety of manufacturing techniques are used to make dissimilar products, and alternative techniques are used to make similar products, each with the same basic unit operations; therefore, to avoid repetition, the discussion is organized by major unit operation. Each major process step is described with particular emphasis on its energy and pollution characteristics. The status and technical/economic implications of each technique are also discussed.

This analysis was carried out qualitatively to facilitate coverage of the maximum number of alternatives. The results of the analysis formed the basis for selecting the candidate options for detailed technical/economic evaluation in Section V.

Some of the process changes discussed in this section could have a significant effect on energy conservation and the environment. Within the framework of this analysis, however, only a few of these changes could be studied in depth; therefore, the latter were chosen with an eye toward those which are likely to be of significant commercial importance within the next 10 years. Other developments are discussed here to call attention to important experimental work that EPA, ERDA, and other government agencies may wish to support or watch closely.

A. IDENTIFICATION OF MAJOR UNIT OPERATIONS

Table IV-1 illustrates the major unit operations in the various pulp and paper manufacturing processes. Each major unit operation includes a variety of methods by which to carry out the intended function; the alternative methods use either basically different techniques or different equipment to implement the same technique. Depending upon the type of raw material, the selected process, and the requirements of the product, some of these process steps may be eliminated. The discussion of the process options and the status of the new technology is organized according to the arrangement shown in Table IV-1.

The diagram also shows the energy usage and pollution characteristics of each process step. Obviously, this ranking of energy usage and contribution to pollution is qualitative and varies significantly from one technique to another. Nevertheless, the diagram puts into proper perspective the relative importance of the operations to these two variables.

TABLE IV-1

MAJOR UNIT OPERATIONS IN PAPER AND PAPERBOARD MANUFACTURE

	PREPARATION	PULPING	HEAT & CHEMICAL RECOVERY	WASHING & BLEACHING (BLEACHING OPTIONAL)	STOCK PREPARATION	PAPER & BOARD MANUFACTURE
	• Barking • Chipping	• Chemical • Chemi-Mech. • Mechanical • Deinking • Non-de-inking	(for chemical & chemi-mech only)			• Sheet formation, mechanical water removal, and drying
ENERGY USAGE	Low	High	High	High	Moderate	High (in drying)
POLLUTION	Moderate	High	High	High	Low	Moderate

B. SUMMARY OF PRELIMINARY EVALUATION

Table IV-2 lists the process changes and changes in industrial practices discussed in this section. The energy and pollution impact of each change are indicated by the letters H, M, and L. Obviously, this ranking is only qualitative and is influenced by our general knowledge of the industry; nevertheless, it suggests the potential importance of each change with respect to its energy and pollution aspects.

Note, also, that the information is organized on the basis of the current state of development of the changes. Because it takes about three years to evaluate, design, and build a new facility, a process must be presently demonstrated to be commercially viable if it is to make a significant impact upon the industry within that time period. Isolated commercial installations with one or two processes in the start-up stage are three to eight years away from having any significant impact. Developments in the pilot or laboratory stage are more than eight years from broad commercial application.

Accordingly, on the basis of the two major criteria established to select candidate processes for detailed analysis (i.e., to have a significant impact upon energy/pollution characteristics -- either beneficial or detrimental -- and to have the potential for an impact within the near-term future), we selected the following process options for consideration:

- Alkaline-oxygen pulping
- Rapson effluent-free kraft process
- Deinking of waste news as a substitute for mechanical pulping
- Thermo-mechanical pulping (TMP)
- Air drying and vapor recompression
- Displacement washing
- Oxygen bleaching
- Vapor-phase, high-consistency bleaching
- Solvent deinking
- Coated unbleached kraft board as a substitute for SBS and recycled board
- All-kraft newsprint
- Dry forming of selected paper and paperboard products

TABLE IV-2

PRELIMINARY RANKING OF PROCESS CHANGES OR CHANGES IN INDUSTRIAL PRACTICE*

Process Step	Wood Preparation	Pulping and Recovery	Washing and Cleaning	Bleaching	Stock Preparation	Sheet Formation	Mechanical Water Removal	Drying	Industrial Practice
Status:									
Laboratory	Pipe Line Chip L/M Transportation H/M	1. Alcohol Pulping L/H 2. Amine Pulping L/H 3. Hydrotropic Pulping L/H 4. Ketone Pulping L/H 5. Dioxane Pulping L/H 6. Biological L/H 7. Hydrogenation L/H 8. Peracetic Acid L/H		1. Electrolytic H/H 2. Ozone Bleaching of Groundwood H/H 3. Ozone Bleaching of Hardwood Kraft H/H					
Pilot Plant	Steam Impreg. Bark Removal L/L	1. Biol – TMP H/H 2. Biol – O_2 H/H 3. AEP L/H 4. Alkaline/O_2 L/H 5. Nitric Acid L/H 6. Hydrosulfide/SO_3 L/L 7. Pyrolysis Kraft Liquid L/H		1. Vapor Phase Bleaching at High Consistency H/H		1. Dry Forming H/H 2. ←	1. High Intensity Pressing H/L ECHO MACHINE H/H including: Twin Wire Former; Gas Turbine Drive; Through Drying; Vapor Recompression	1. Thru-Drying H/L → 3. Fluidized Bed H/L	
Commercial (Isolated Installations)		1. Polysulfide L/L 2. S-Free Semi-Chem L/H 3. Green Liquid L/L 4. Fluidized Bed Recovery L/H 5. Rapson-Closed System H/H	1. Displacement Washing/Bleaching H/H	1. Oxygen Bleaching and Recovery of O_2 H/H	1. Chemical Beating M/L	1. RAD-FOAM H/L 2. High Density H/L	1. Vac-Drying H/L		
Commercial (Possible Greater Applications)	1. Whole Tree Chipping H/L 2. Dry Debarking L/H	1. TMP L-H/M 2. Bisulfite H/M 3. Solvent Deinking/Cleaning H/H				1. Twin Wire M/L 2. Conver. Flow H/H		1. Flash Drying H/L 2. Thru-Drying H/L 3. Air Drying H/L	1. All Kraft Newsprint H/H 2. Coated Unbleached Kraft Board H/H 3. Lower Bright. Pulp H/H 4. Increase Usage S/F for: – Newsprint – Containerboard H/H

* Ranking of Potential Impact upon Energy/upon Pollution: H – High
M – Medium
L – Low

Following a review of the candidate options by the EPA Project Officer and EPA technical advisers, ADL agreed to make an in-depth analysis of the first four listed options. The analysis is presented in Section V.

Improvements in drying techniques could have a significant beneficial effect on energy usage, and developments in this area were initially considered for in-depth analysis. However, they were subsequently omitted because any significant commercial impact from such improvements would not be realized within the near-term future.

C. WOOD PREPARATION

1. Current Practice

Pulpwood may be delivered to the "mill yard" as:

- whole logs with or without bark in 4-foot, 8-foot, or tree length,
- chips with or without bark, or
- manufacturing residue, i.e., sawdust and shavings from a lumber manufacturing operation.

Frequently, a mill will receive all three forms of pulpwood.

Traditionally, bark was removed from the 4- or 8-foot logs ("sticks") by tumbling them in a rotating cylinder. Water was applied during this operation to flush away the loosened bark as the logs were moved to the next operation. Of course, some bark and wood particles were carried along with the water effluent and contributed to its BOD and suspended solids load. The bark was used for landfill, because fuel prices were too low to make heat recovery from the wet bark economically attractive. On the West Coast the historical method was to use high-pressure water jets to remove bark; this technique is seldom used any longer, because the bark carried out to the river is not only unsightly but also creates a major water pollution problem.

Today, with energy so expensive and landfill areas increasingly difficult to find, the larger mills have discarded these historical practices. Either "dry" (waterless) debarking techniques are used or, if water is used, the excess water is removed by pressing, and the recovered bark is burned for its heat value. These new practices have eliminated the water effluent and solid waste problem associated with barking, but burning does increase air particulate emissions. Since the particulate is organic, electrostatic precipitators are not effective.

An alternative barking technique is to pass each log separately through mechanical scraping devices. In this case, no water is used.

Once the bark is removed, the logs are reduced to "chips", if they are to be used for chemical, chemi-mechanical, or refiner ground-wood pulping. If they are to be used for stone groundwood pulping, they are left whole. (See Section IV-D.)

Wood chips (without bark), sawdust, and shavings do not require further processing, except washing of the chips, before they enter the pulping operation. The bark is collected either at the lumber yard or at the wood harvesting site. Unless the collection point is close to the pulp mill, however, the low fuel value of bark does not justify transportation to the pulp mill boilers.

2. New Technology

a. Pipeline Chip Transportation

As the name implies, the aim of this technique is to transport chips from the point of origin -- typically a sawmill -- to the point of end use -- a pulp mill. Some ten years ago there was considerable interest in this technique (particularly on the West Coast, where practically all the pulpwood is derived from sawmill waste) to reduce hauling costs. At that time, there was also talk of "pipeline pulping." The proposed concept was to add cooking chemicals to the water that carried the chips through the pipe.

Some pilot experimental work with pipeline chip transport was done on the West Coast. It was found technically feasible to transport chips in this manner, but water disposal at the end of the pipeline was a problem. Some of the organic materials in the wood chips were solubilized or dispersed during transport, creating a significant BOD and suspended solids load. No further work is being done on this technique, to our knowledge.*

b. Steam Impregnation and Bark Removal

In the past five to ten years, there has been growing interest in chipping rough wood (i.e., with the bark still on the log) and "whole tree chipping" (using the entire tree with bark and foliage). In each case, bark appears along with the wood chips. For a variety of technical and economic reasons, it is desirable to remove the bark from the wood chips. Steam impregnation and compression is one of the more promising separation techniques.

Pilot work is in process at Michigan Technological University, at Houghton, Michigan, under the direction of Professor John Erickson. In this process, the mixture of chips and bark is impregnated with steam for about 10 minutes and then passed between two rotating steel rolls. The difference in the compression resistance between the wood chips and the included bark causes the bark to adhere to the roll surface but leaves the wood chips

*Because pipeline transport does not account for much energy consumption, we relied on in-house information on this subject.

relatively unaffected. The chips fall into a collection bin directly below the nip opening, while the bark remains on the roll until scraped off into a separate collection bin.

Apparently, no one is using this technique on a commercial scale, but it has attracted considerable interest as a more convenient (and economical) means of bark removal. It should have no adverse effects upon emission control regulations, because the ultimate aim is still to burn the recovered bark for its heat value.

There are other techniques for bark separation. In one, the vac-sink process, the bark/chip mixture is first placed in a vacuum chamber, and the entrained air is exhausted. When the treated mixture is placed in water, the bark floats to the surface and the chips sink to the bottom. The two fractions are then recovered separately. At one time there was considerable interest in this process, but that interest appears to have diminished. The vac-sink process is not a major energy user or polluter.

c. Whole-Tree Chipping

In this process, as the name implies, the entire standing tree is harvested, and the fibrous portions of the trunk, branches, leaves, and bark are reduced to raw material for pulping. The objective is to increase the yield of wood extracted from a harvested area and to use less labor than is required in more conventional techniques of pulpwood harvesting, transport, and wood preparation.

A number of firms are using this technique on a commercial basis, but they do not entirely agree on its technical and economic merit. It is most successful in harvesting hardwoods that will be used to make unbleached kraft pulp. Whole-tree chips can also be used in bleached pulp applications, but here they generally make up only 10-15% of the total pulpwood; the remainder consists of chips prepared in the more conventional manner.

The bark, leaves, and other debris are extracted along with the spent liquor in the washing operation and ultimately end up in concentrated black liquor burned in the recovery boiler. The presence of these additional organic materials in the black liquor stream necessitates larger process equipment to produce the same amount of product that would have been obtained from bark-free chips.

Whole-tree chipping has two characteristics that are of particular importance to EPA: (a) it recovers more forest residue which can be used to supplement fossil fuel, and (b) burning more organics in the recovery boiler may increase the particulate emissions from that source. The latter objection is partly offset by the fact that less fossil fuel must be burned in the power boiler.

At present, whole-tree chips are used only in a few mills, and then only as a small portion of the total pulpwood supply. In addition, most of the whole-tree chip usage has been confined to hardwoods. However, a number of organizations are studying ways of separating the bark, twigs, leaves, extraneous dirt, etc. from the good pulpwood. Successful development of an economic classification process would produce significant changes in methods of harvesting and transporting pulpwood.

The yield of usable pulpwood per acre would increase considerably with widespread use of an effective whole-tree chip classification process. Assuming that classification would be done at the pulp mill, there would be less wood residue left in the forest, more energy generated via burning of the reject material in residue burners, and a greater value of particulate emissions from the residue burners. We do not know of any successful whole-tree chip classification processes that are in early commercial operation or even exploratory pilot stages.

d. Summary

Wood preparation uses comparatively little energy and causes little pollution. Although a number of process techniques are of interest from a technical/economic point of view, none appears to be significant enough as an energy saver or source of pollution to warrant close EPA attention.

D. PULPING, BLEACHING, AND RECOVERY

1. Standard Technology

Wood is made up of fibers imbedded in a matrix of lignin. The fibers are largely a mixture of carbohydrate polymers, and the lignin is similar chemically to a partially condensed, B-state phenol formaldehyde resin. The percentage of lignin varies from 15% to 30%, depending upon the wood species. About 30-40% of the wood is a high-molecular-weight polymer (alpha cellulose); the remainder is a mixture of polymers of lower molecular weight.

Basically, wood is reduced to pulp in three ways -- chemical reaction, which dissolves a portion of the lignin; mechanical, in which the whole wood is ground up to fibers; and a combination of these two called chemi-mechanical or semi-chemical. Sulfite was once the most widely used chemical pulping process, but today the kraft process is by far the most important. In the mechanical process, logs are held against a grindstone (stone groundwood) and reduced to fibers, or chips are subjected to attrition in a disc mill to produce pulp (refined mechanical pulp, or RMP). The most important of the combined chemical and mechanical processes is the neutral sulfite semi-chemical (NSSC) process, in which chips are treated for a brief time with a sodium sulfite solution and then reduced to pulp in a disc refiner. The NSSC process is used for 80-90% of all the pulp produced in the United States by chemi-mechanical means.

Pulp yields vary from almost the theoretical maximum (97%) in the mechanical process to 70-80% in the chemi-mechanical process and 35-65% in the chemical process. In the last case, yield level depends upon the end-use application for the pulp: it is 33-35% for dissoving pulp, 42-45% for fully bleached paper-grade pulps, 48-54% for unbleached pulp for linerboard, and 60-64% for the high-yield bisulfite pulp used in newsprint. These "standard" pulping processes are described in more detail below.

a. Kraft Pulping

In 1974, U.S. production of bleached kraft pulp was 14 million tons, versus 1.9 million tons produced by the sulfite process, the nearest competitor. Except for minor evolutionary changes, the process has remained the same, since the commercial development of bleached kraft in the early 1930's.

In the kraft process, wood chips are heated at elevated temperature and pressure (340°F top temperature, 150 psi pressure) with a solution of sodium hydroxide and sodium sulfide. In this cooking step the major portion of the lignin in the wood and some of the carbohydrate materials are dissolved; the yield of unbleached pulp (the undissolved material) is around 48%.

The contents of the cooking vessel are then discharged to atmospheric pressure, and the crude pulp is separated (in countercurrent washers) from the solution of lignin, carbohydrate materials, and inorganic cooling chemicals. This solution (black liquor) is evaporated to 60-65% solids and then burned in a smelting-type furnace for recovery of heat and cooking chemicals. The bottom section of the furnace is operated under reducing conditions to convert all of the sulfur compound to sulfide. The molten mixture of inorganic sodium carbonate and sodium sulfide flows into dissolving tanks to make the so-called green liquor.

The green liquor is then treated with lime (calcium oxide) to convert the carbonate to hydroxide. The separated calcium carbonate is burned in a kiln, once again converting it to lime, and the clarified solution (white liquor) is recycled to the cooking vessel. The make-up chemical, sodium sulfate, is added with the concentrated black liquor to the furnace; alternatively, sodium hydroxide (either alone or mixed with sodium sulfate) can be added directly in the causticizing step, depending upon the desired sulfur balance in the white liquor.

The unbleached, washed pulp is bleached in a multi-stage sequence. The objective of this treatment is to remove the residual lignin as well as other colored impurities in the pulp while maintaining as much as possible of the pulp yield and pulp strength. A typical sequence (C-E-D-E-D) employs chlorination, caustic extraction, chlorine dioxide, caustic extraction, and

chlorine dioxide, with vacuum washing after each stage.* These five-stage bleach sequences on softwood give a 90-92% brightness pulp with a yield of about 41.5%.

As far as possible countercurrent flow is used in the bleach plant to keep water consumption and effluent to a minimum. Even with the best practice, however, substantial bleach plant liquid effluent must be treated to remove both BOD, TSS and color. The concentration of the dissolved solids in the bleach plant effluent is such that evaporation and burning of the collected organics are uneconomic, nor can the effluent be used in the pulp mill; the high chloride content would introduce equipment corrosion and process problems. Figure IV-1 is a summary material and energy balance for a conventional kraft pulping process.

Table IV-3 summarizes the energy requirements and pollution loads for bleached kraft slush pulp production. Note that while the total energy requirement is about 24 million Btu per ton of slush pulp, almost three-fourths of this is provided by "recovered energy" - i.e., it is obtained by burning bark and organic materials recovered in the pulping operation. The net purchased energy is 7.2 million Btu per ton of product. Note also that the recovery and bleaching process steps are by far the most significant energy users and contributors to air and water effluents.

Since slush pulp is simply an interim product, we have "added" a paper machine to the pulping operation for the manufacture of a finished product. Although many products can be made from bleached kraft pulp, the energy/pollution characteristics of the conversion step do not vary greatly from one product to another.

Table IV-4 summarizes the energy requirement for the manufacture of bleached kraft paper or board in an integrated pulp and paper mill. Note that pulping, bleaching, and chemical recovery again stand out as the key energy-consuming process steps. Note also that papermaking, i.e., paper and board production, by itself uses half as much energy as the entire pulping operation. The 36.8 million Btu per ton represents the total energy requirement; of this, about 17 million Btu is supplied by the combustion of residue fuels, as was shown in Figure III-2.

As previously indicated in the analysis of slush pulp manufacture, most of the energy required for its manufacture is obtained from the combustion of residue fuels. Furthermore, more than 50% of the total purchased energy is used in the papermaking operation.

*In recent modifications of this traditional bleach sequence, some of the chlorine dioxide is incorporated in the first chlorination step.

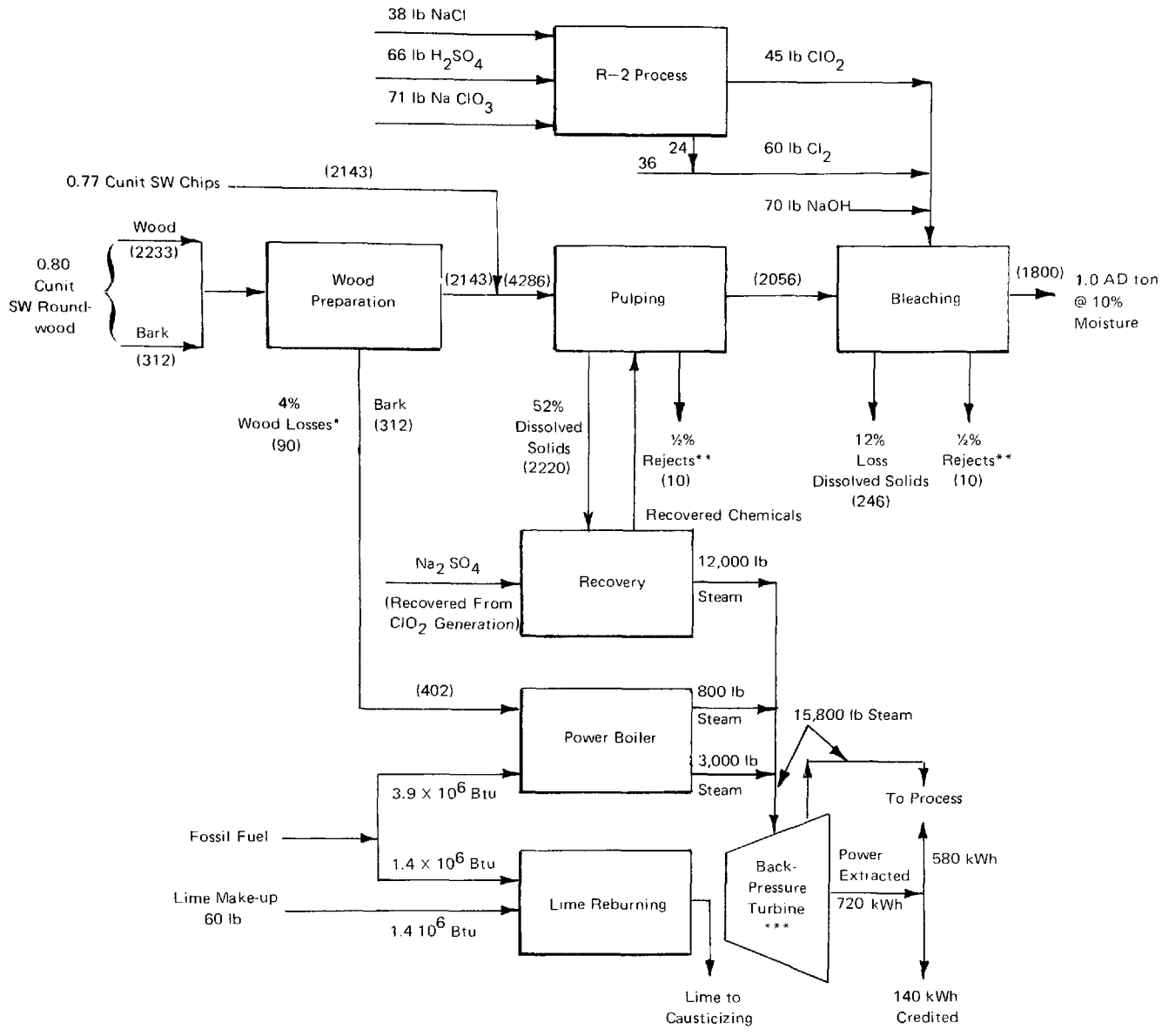

Basis: 1.0 AD Ton Slush Pulp

( ) Indicates bone-dry (BD) lb; 1.0 air-dry (AD) ton = 1800 BD lb

1 cunit = 100 ft^3 of solid wood; weight per BD cunit ranges from about 2200 lb to 3400 lb, depending on wood species.

*2% loss on barking (suitable for fuel recovery) +2% loss on chipping (suitable for fuel or fiber recovery).

**Fiber loss (suitable for recovery in lower-grade products)

***Heat-to-power conversion in this type of turbine is typically about 4000 Btu/kWh.

Source: Arthur D. Little, Inc., estimates

Figure IV-1. Standard Kraft Technology Material and Energy Balance (Basis: 1.0 ADT Slush Pulp)

TABLE IV-3

ENERGY REQUIREMENTS AND POLLUTION LOADS FOR BLEACHED SLUSH PULP
(New mill basis, by process step)

	Wood Preparation	Pulping	Bleaching	Chem. Recovery, Liquor Prep. & Lime Reburning	Misc. and Auxiliaries	Water Effluent Treatment	Total
Energy Consumption (10^6 Btu/ton)							
Fuel (Lime Reburning)	-	-	-	1.4	-	-	1.4
Steam	-	4.9	9.1	5.8	0.7	-	20.5
Power	0.4	0.4	0.4	0.7	1.2	0.4	3.5
Total Energy	0.4	5.3	9.5	7.9	1.9	0.4	25.4
Recovered Energy	(2.0)	-	-	(16.0)	-	-	(18.0)
Net Purchased Energy	(1.6)	5.3	9.5	(8.1)	1.9	0.4	7.4
Water Effluent Loads							
Total Flow, (000 gal/ton)	1	6	19	5	-	-	31
TSS (lb/ton)	8	17	14	27	-	-	66
BOD_5 (lb/ton)	2	23	31	10	-	-	66
Color (lb/ton)[a]	15	65	210	5	-	-	300
Air Emission Loads							
Particulates (lb/ton)	0	0	0	200	-	-	200
TRS (lb/ton)	0	9	0	15	-	-	24

[a] As defined in EPA Development Document.
Source: Arthur D. Little, Inc. estimates

TABLE IV-4

ENERGY REQUIREMENTS FOR A NEW, INTEGRATED BLEACHED KRAFT PULP MILL
(Pulp Yield = 42% (BD Basis)

	Steam		Power		Total
	lb/ADT	Equivalent 10^6 Btu/ADT[a]	kWh/ADT	Equivalent 10^6 Btu/ADT[b]	Equivalent 10^6 Btu/ADT
Wood Preparation	0		110	0.4	0.4
Pulping	3,800	4.9	115	0.4	5.3
Bleaching	7,000	9.1	95	0.4	9.5
Chemical Recovery	3,800	4.9	150	0.6	5.5
Liquor Preparation	700	0.9	25	0.1	1.0
Water Treatment and Effluent Disposal	0	-	70	0.3	0.3
Shops, Stores and Miscellaneous	500	0.7	15	0.1	0.8
Lime Reburning	-	-	-	-	1.4
Total Energy Usage for Slush Pulp	15,800	20.5	580	2.3	24.2
Paper or Board Production	8,500	11.0	400	1.6	12.6
Total Energy Usage, Slush Pulp and Paper or Board	24,300	31.5	980	3.9	36.8

Recovered Heat[c]:

Spent liquor: 12,000 lb steam/ADT = 16.0 x 10^6 Btu

Bark and sawdust: 800 lb steam/ADT = 1.0 x 10^6 Btu

[a] Process steam estimated at 1100 Btu/lb net (steam heat content less condensate credit) and 85% boiler efficiency = 1300 Btu fuel/lb steam.

[b] Extracted power estimated at 4000 Btu fuel/kWh

[c] Recovered heat based on steam @ 1300 Btu fuel equivalent/lb. This represents a recovery boiler heat efficiency of 75%.

Source: Arthur D. Little, Inc. estimates

Table IV-5 summarizes the energy requirements, water effluent, and air emissions loading for an integrated bleached kraft pulp and paper mill. It indicates that the main water and air emissions originate in the same process steps that are energy-intensive: pulping, recovery, and bleaching. The amount originating in the paper mill is small in comparison to these sources.

Figure IV-2 shows the above information graphically and emphasizes the characteristics of the major unit operations from an energy and pollution viewpoint.

b. Mechanical Pulping

The stone grinding process has changed little in the past hundred years. A log is held under pressure against a grindstone and reduced to pulp. The screening rejects are recycled through a disc refiner, so the only yield loss is the dissolved organic material -- generally around 3%. The process suffers from one major limitation -- chips and other residue such as sawdust and shavings cannot be used successfully.

The advent of refiner mechanical pulp (RMP) has removed this limitation from mechanical pulps. Depending upon the wood species, RMP requires 10-20% more energy than stone groundwoood, but pulp strength is significantly higher. Yield is about the same in both processes.

Mechanical pulps are bleached with non-delignifying reagents -- either reducing chemicals such as sodium hydrosulfite or oxidizing agents such as peroxides. There is little or no yield loss in the bleaching reaction, and brightness gains of 8-10 points (from 60% brightness to the low 70's) are typical of commercial operations.

Chemical dosage is typically about 1% zinc hydrosulfite or 1% hydrogen peroxide. In recent years some of the hydrosulfite used commercially is made by reacting sodium borohydride with sulfur dioxide just before it is added to the groundwood stock.

Total purchased energy requirements for a typical stone groundwood mill are 13.3 million Btu/ADT and 15.1 million Btu/ADT for a RMP operation. The water effluent load from a typical stone groundwood mill is 3000 gallons with a BOD loading of 38 lb/ADT and TSS of 36 lb/ADT. The water effluent load for RMP is the same as for stone groundwood, but the BOD load is somewhat higher (41 lb/ADT) and total suspended solids are considerably higher (90 lb/ADT). These energy- and pollution-related factors are considered in more detail in Section V.

c. Chemi-Mechanical Pulping

In the most widely used chemi-mechanical pulping process, chips (generally hardwoods) are cooked under pressure with a mildly alkaline solution of sodium sulfite. The chemically treated chips are then disintegrated

TABLE IV-5

ENERGY REQUIREMENTS AND POLLUTION LOADS FOR BLEACHED KRAFT PAPER AND BOARD PRODUCTION
(New mill basis)

	Wood Preparation	Pulping	Bleaching	Chem. Recovery, Liquor Preparation and Lime Reburning	Paper Mill	Misc. and Auxiliaries	Water Effluent Treatment	Total
Energy Consumption (10^6 Btu/ton)								
Fuel (Lime Reburning)	-	-	-	1.4	-	-	-	1.4
Steam	-	4.9	9.1	5.8	10.0	1.7	-	31.5
Power	0.4	0.4	0.4	0.7	1.4	0.2	0.4	3.9
Total Energy	0.4	5.3	9.5	7.9	11.4	1.9	0.4	36.8
Recovered Energy	(1.0)	-	-	(16.0)	-	-	-	(17.0)
Net Purchased Energy	0.6	5.3	9.5	(8.1)	11.4	1.9	0.4	19.8
Water Effluent Loads								
Total flow (000 gal/ton)	1	6	19	5	8	-	-	39
TSS (lb/ton)	8	17	14	27	34	-	-	100
BOD_5 (lb/ton)	2	23	31	10	12	-	-	78
Color (lb/ton)	15	65	210	5	5	-	-	300
Air Emission Loads								
Particulates (lb/ton)	-	-	-	200	-	-	-	200
TRS (lb/ton)	-	9	-	15	-	-	-	24

Source: Arthur D. Little, Inc. estimates

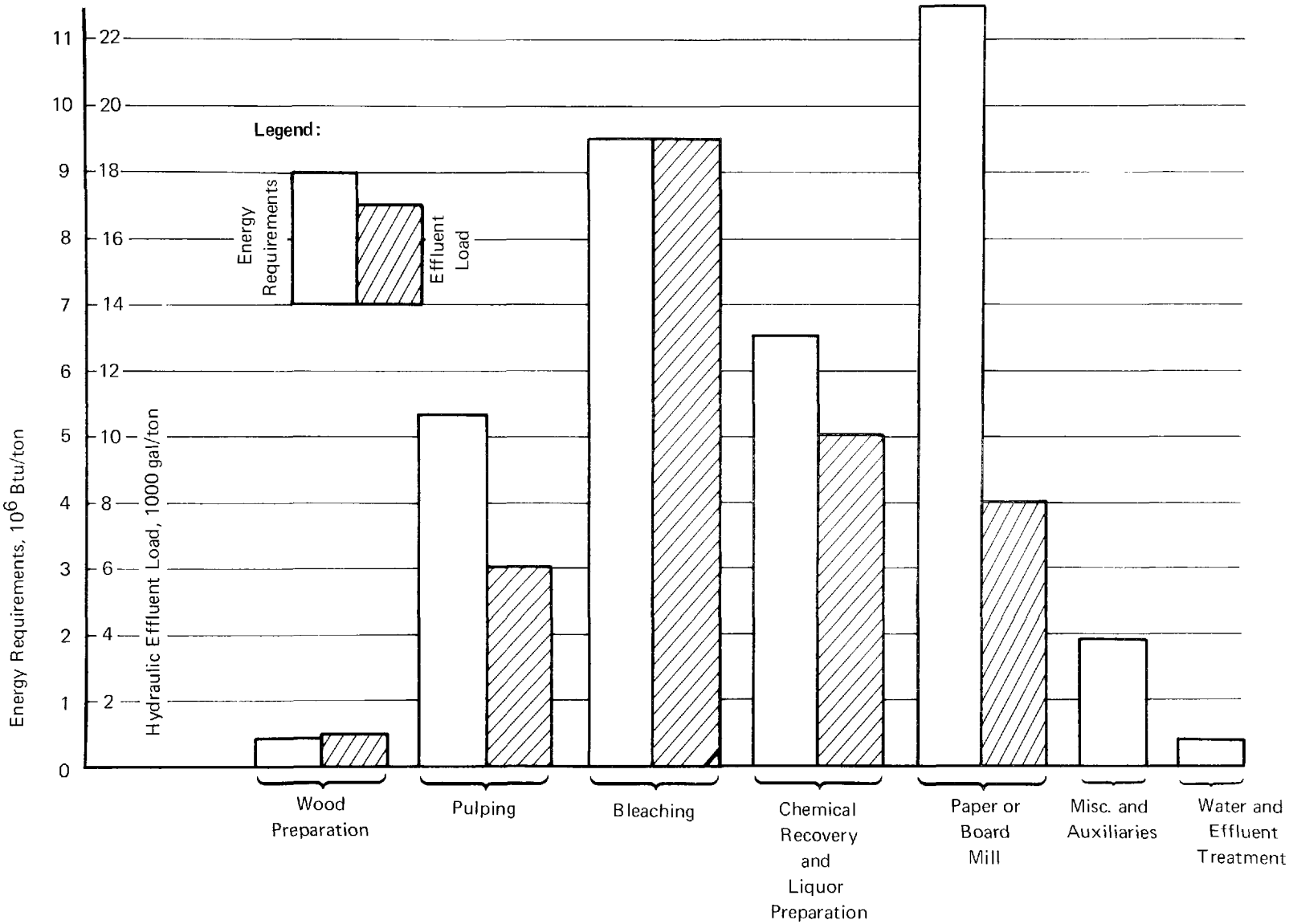

Figure IV-2. Energy Requirements and Hydraulic Effluent Loads for Bleached Kraft Paper and Board Production

in disc refiners to form NSSC pulp, which is particularly suitable for corrugating medium. This yield is about 75%.

The effluent that is separated from the pulp contains dissolved organics and cooking chemicals. These are treated in a variety of ways. In some mills which have adjacent kraft facilities, the recovered liquor is combined with the black liquor from the kraft system and becomes sodium-sulfur makeup for the kraft system. Because of the quantity of chemicals in the NSSC system and the makeup requirements of the kraft system, the allowable ratio of pulp production generally is four tons of kraft to one ton of NSSC.

Where the kraft system is not available, the recovered solution is evaporated and burned. In some mills the furnaces are operated to produce a sodium sulfite/sodium carbonate smelt, which is treated to separate the sodium-sulfur values, convert the sulfur to sulfur dioxide, and then recombine it with the sodium to produce a regenerated cooking chemical solution. In other mills the burning is conducted to separate the sodium-sulfur in the furnace; an example of this is the SCA-Billerud system, which is being installed in a new Mead Corporation NSSC mill in Alabama.

Since the NSSC recovery system goes through a sulfide step, in a manner rather similar to that which occurs in the kraft recovery system, it introduces some air pollution. However, this problem is less severe than with kraft, because few obnoxious volatile organic sulfur compounds are produced in the pulping reaction. Moreover, the quantity of dissolved organic and pulping chemicals consumed is much less.

2. New Process Technology

A number of new processes which are in various stages of development are reviewed below in terms of the technology, current status, and possible effects on energy consumption and pollution load. Alkaline-oxygen pulping, thermomechanical pulping, the ERCO-Rapson effluent-free kraft mill system, and deinking of waste news are not covered here, as these four technologies are analyzed in detail in Section V.

a. Pulping and Recovery

(1) Solvent Pulping

Solvent pulping is a misnomer, in the sense that lignin in the natural state is not readily soluble in any known liquid medium. An appreciable quantity of lignin cannot be removed by solution unless it is degraded when the wood is being extracted by the solvent. Thus, most of the organic solvent pulping processes, such as those based on ethyl alcohol, methyl alcohol, methyl ethyl ketone, or dioxane, involve the use of acid such as hydrochloric acid along with the organic solvent to degrade the lignin and make it soluble.

U.S EPA Headquarters Library
Mail code 3404T
1200 Pennsylvania Avenue NW
Washington, DC 20460
202-566-0556

Unfortunately, the acid also has an unfavorable effect on cellulose, decreasing the yield of carbohydrate material; hence, the products of the alcohol pulping agents are characterized generally by low yield and inferior pulp strength. In addition, since large quantities of solvent are required to treat the wood (usually at least six pounds of solvent per pound of pulp), the efficiency of solvent recovery is critical to the economics of these processes.

Solvent pulping must be done at temperatures comparable to those used in kraft pulping, so the digester equipment is no less complicated than in the kraft process. The high-capital-cost kraft recovery system is replaced with an equally high-cost system for solvent recovery, lignin recovery, and disposal. Because of their relatively low yield, low pulp-strength properties, and high capital costs, the solvent pulping processes are not considered further in this report.

(2) Amine Pulping

Pulping with amines such as diethanol amine has gained prominence recently. This solvent pulping process differs from those previously described, because the solvent is alkaline. It acts as a lignin degradation agent as well as a lignin solvent. Superior pulp strength, especially tear strength, is claimed with amine pulp. Reaction time, temperature, and yield are similar to those of the conventional kraft process. As with the other solvent pulping processes described in (1) above, recovery of the amine solvent in high yields is essential if the process is to be economical. Although the amine odor is different, it is just as offensive to many people as the kraft odor, so air pollution is also a problem here. Because of potential air and water pollution problems, the anticipated high capital investment per ton of production, and the anticipated solvent recovery problems, we have not given further consideration to amine pulping.

(3) Hydrotropic Pulping

Another solvent approach - hydrotropic pulping - is periodically resurrected, re-evaluated, and discarded. This intriguing process, invented by Professor McKee at Columbia University in the 1940's, is based on the observation that a concentrated (i.e., 40%) solution of an inorganic salt such as sodium xylene sulfonate is an effective solvent for organic compounds and, at elevated temperatures, can dissolve lignin.

The process attracts attention from time to time because of the unique recovery process. After pulping, the hydrotropic solvent is simply diluted to a point at which it is no longer an organic solvent; the dissolved lignin then separates and is collected. The filtrate is reconcentrated to 40% solids, and the pulping agent is recovered.

In addition to the usual problems encountered with solvent pulping reactions (i.e., necessity for an extremely high degree of solvent recovery for favorable economics), hydrotropic pulping suffers from the fact that the lignin

is not dissolved very effectively. Under neutral conditions only minor amounts of lignin are dissolved, and the cellulose is also attacked if acid or alkaline conditions are used to accelerate the degradation of lignin into smaller, soluble fragments. Yield as well as pulp properties are degraded. Accordingly, we doubt that this process will reach commercialization within the next 5-10 years.

(4) Hydrogenation Pulping

Lignin can be made soluble by treatment with hydrogen over a suitable hydrogenation catalyst in aqueous solvent at elevated temperatures and pressures. The advantage of this approach to pulping is that the cellulosic material is obtained in high yield and with little damage. In addition, the lignin is recovered in low-molecular-weight fragments, which can serve as raw material for further conversion to commercial chemicals.

Much theoretical attention has been given to hydrogenation pulping over the years, with occasional attempts at commercialization. The most recent of these commercial approaches was the work conducted at Pressure Chemical Company in Pittsburgh, Pennsylvania. In this work, which was sponsored by a group of forest products companies, a mixture of hydrogen and carbon monoxide was used; cobalt carbonyl served as they hydrogenation catalyst in the aqueous solution. With carbon monoxide as a feed gas, the catalyst was retained in the carbonyl (i.e., soluble) form and so, in theory, was recycled and recoverable.

A pulp was obtained at high yield and with properties described as superior to those of kraft. However, pressures of 2000-4000 psi were used in the hydrogenation phase. Because pulping equipment for such high pressures would require high capital costs, and because the expensive catalyst would probably be difficult to recover efficiently, the process does not look promising at this time.

(5) Peracetic Acid Pulping

Peroxygen compounds, such as hydrogen peroxide, sodium peroxide, and peracetic acid, react with lignin at relatively low temperatures under the proper conditions. Much of the peroxygen pulping work has been done with peracetic acid. Publications describe the process as giving a high yield of pulp with superior physical properties, and the pulping reaction can be conducted at atmospheric pressure. The problem is that peracetic acid is expensive, so commercial use of the process must await a method for successfully recovering the acetic acid and regenerating peracetic acid.

The most recent peracetic work, conducted by the Wood Sciences Department of Colorado State University, is directed at the regeneration of peracetic acid from the pulping effluent. In January 1975, after two years of internally funded work on this project, the University obtained some industry sponsorship for its continuation.

If the problems of regenerating the peracetic pulping agent can be solved, such a process offers many desirable features: high yield, high pulp strength, low air and water pollution, and (because high temperature and pressure are not used) the promise of low capital cost per ton of production and smaller economic-sized units.

(6) Biological Pulping Process

It has long been known that certain microorganisms have some degree of specificity toward lignin, but they have not been used commercially for pulping because the reactions are too slow and not specific enough to avoid some attack on the cellulose. Nevertheless, the possibility of using microorganisms to bring about a pulping reaction is attractive from the standpoint of pollution abatement, high yield, low capital cost, and potential recovery of valuable byproducts. Therefore, biological pulping is being pursued with increasing interest at such research institutions as the Forest Products Laboratory, Swedish and Finnish Cellulose Research Institutes, and the University of Washington, Department of Forestry.

These programs generally have two objectives. One is to alter the lignin sufficiently so that in a subsequent pulping reaction it can be removed under much less severe conditions (i.e., with regard to time, temperature, pH, and quantity of chemical required). The second objective is to make the lignin completely soluble so that it can be removed as part of the biological attack step and without additional pulping reactions. At this time only tentative laboratory results are available; pilot-plant processes probably will not be ready for evaluation for several years.

(7) Ammonia Explosion Process (AEP)

Kimberly-Clark has developed and patented a novel fiberizing process, AEP, in which liquid ammonia and chips are placed in a high-pressure vessel, the temperature is raised until the pressure reaches about 1000 psi, and the contents of the pressure vessel are then blown into a cyclone. Ammonia, in combination with the moisture in the chips, plasticizes the lignin; as a result, when the contents of the vessel are blown out, the wood chips literally explode, with almost complete separation of the individual fibers and with very little fiber damage. The pulp yield approaches the theoretical maximum.

The raw product from the digester might be used as starting material for a number of pulp products: e.g., high-yield mechanical pulp, a corrugating-medium-grade pulp (after extraction with caustic) or a fully bleached kraft-like pulp with a full-scale bleaching operation. However, the reaction between lignin and ammonia creates a major problem: the pulp is dark, and it is difficult to bleach because the lignin is highly condensed. Kimberly-Clark has abandoned its development efforts.

(8) Nitric Acid Pulping

Concentrated nitric acid reacts rapidly with the lignin in wood at atmospheric pressures and has been considered as a pulping agent for many years. Unfortunately, pulp yield is generally similar to, or lower than, that of kraft pulp and its properties inferior. In addition, as concentrated nitric acid is highly corrosive, construction materials in the cooking area of the pulp mill must be corrosion-resistant; this drastically increases material costs and makes this a high-capital cost system. The anticipated capital investment per ton of production is no lower than for kraft pulp.

The effluent from such a pulping process would have nitrogen values as well as dissolved organics, and so might be used as a fertilizer. For this reason, nitric acid pulping is periodically rediscovered as a process which not only gives a nonpolluting effluent but has positive values in agriculture. However, the pulp yield, pulp properties, and capital investment have discouraged commercial investment.

(9) Hydrosulfide/Sulfite Pulping

If wood is cooked with an alkaline mixture of sodium hydrosulfide, carbonate, and sulfite, it is possible to produce linerboard grades of unbleached pulp with yields 6-10% higher than those obtained by conventional kraft pulping. The hydrosulfide-sulfite process gives a stronger pulp than conventional kraft at the same lignin content; alternatively, it can produce pulp of equivalent strength and ease of defibering at a higher yield and higher lignin content.

The principal motivation for using the hydrosulfide-sulfite process is the possibility of obtaining the properties of unbleached kraft at a higher yield. P.E. Shick of Owens-Illinois has compared kraft with the hydrosulfide-sulfite pulp at a 10% higher yield (i.e., 62% versus 52%); he found that the conventional kraft refining time was somewhat shorter than that of hydrosulfide-sulfite, and burst values were almost identical. Ring-crush and brightness levels were higher for the hydrosulfide-sulfite, but its tear resistance was lower by about 15%.

Because the hydrosulfide-sulfite cooking process subjects the fiber to less severe conditions, there is less degradation. The result is satisfactory burst and ring-crush properties at a higher yield level. Like other high-yield pulps, however, these have comparatively less fiber per unit weight; consequently, tear strength suffers. Since burst and crush are the more significant properties with linerboard products, the higher-yield hydrosulfide-sulfite pulp should compare favorably with the conventional kraft pulp in unbleached pulp applications.

The major problem with this process has been the amount of sulfur required in the pulping reaction. Probably because of pollution problems arising from the high sulfur content of the pulping liquor, the hydrosulfide-sulfite process is not (to our knowledge) in commercial use.

(10) Pyrolysis of Kraft Liquors

St. Regis has developed and patented a process for recovering kraft black liquor by treating the concentrated liquor in the furnace under pyrolysis conditions. A gaseous stream of volatile organics and inorganic sulfur compounds is recovered, and the sodium values remain with a carbonaceous char. The char is extracted to recover sodium carbonate and then burned to recover its heat value or treated further to make an activated carbon. The gas stream is stripped of sulfur compounds and then burned for additional heat recovery.

The process is undergoing pilot-plant trials at the St. Regis Pensacola mill. In addition, pilot-plant evaluation of the use of the activated carbon made from the char in decolorizing pulp mill effluent has been carried out under an EPA contract.

(11) Hydrogen Sulfide Pretreatment-Kraft Pulping

Pulp yield, at a fixed lignin content, can be increased by treating the wood with reducing agents prior to an alkaline pulping reaction. The reducing agents stabilize alkali-sensitive points in the carbohydrates. Without the reducing action the alkali-sensitive groups are degraded, uncovering other sensitive groups and leading to the so-called unzippering or peeling reaction by which carbohydrate material is dissolved. One of the more promising reducing agents is hydrogen sulfide.

MacMillan Bloedel Ltd. has constructed a continuous pilot plant at the site of its Harmac mill. According to Hans Worster of MacMillan Bloedel, pilot-plant work has confirmed published laboratory results about the substantial yield (up to 15%) with hydrogen sulfide pretreatment. No commercial plants utilize the process, however, one reason being the problems of handling and recovering large quantities of a poisonous, flammable, offensive-smelling gas. We doubt that the process will be widely accepted in commercial practice.

(12) Polysulfide Pulping

The unzippering or peeling effect can be controlled with oxidizing agents such as polysulfides, as well as with reducing agents like those used in hydrogen sulfide pretreatment. A yield increase is observed when polysulfide is added to the cooking liquor and the excess sulfur is vented to the air. Recently, Mead Corporation developed a recovery system for the polysulfide solution and has installed it at its Chillicothe mill. The process is reported to be operating satisfactorily, and Mead is seeking to license its recovery process.

Aside from a few installations in Scandinavia, we know of no other commercial examples of polysulfide pulping. One of the weaknesses of the process appears to be that the black liquor must be processed through a conventional kraft recovery system before entering the polysulfide recovery unit.

Excessive sulfur losses in the kraft recovery system reduce the effective sulfide content of the black liquor. We expect that polysulfide pulping will have only limited commercial applicability.

(13) Sulfur-Free Semi-Chemical Pulping

A disadvantage of the previously-described NSSC pulping and recovery system is that sulfur is one of the active pulping agents. Two companies, Westvaco and Owens-Illinois, have announced the development of sulfur-free semi-chemical systems. Both companies have installed the system in a commercial unit and are seeking licensees for their process. Process details are considered proprietary, and we have not had an opportunity to evaluate either system. To our knowledge, there are no commercial installations beyond those at the mills of the companies developing the process.

(14) Green Liquor Semi-Chemical Pulping

It has recently been discovered that a corrugating-medium grade of pulp can be produced satisfactorily utilizing kraft green liquor as the cooking reagent rather than alkaline sodium sulfite. The attractiveness of the process lies in the availability of an efficient, proven kraft recovery system or the co-recovery possibilities in conjunction with a kraft mill. With green liquor cooking of semi-chemical pulp, there are no limitations on the kraft-semi-chemical pulp ratio in the combined operation. Several commercial installations use a green liquor kraft system, and we expect an increasing number of mills to use kraft green liquor for semi-chemical pulping.

(15) Sonoco Recovery of NSSC Pulping Liquors

Sonoco Products Company in Hartsville, South Carolina, has recently announced a sulfite recovery system which would be used to treat NSSC liquors. It utilizes the fact that certain silicate and aluminate salts are strongly acidic at the temperatures encountered in a recovery furnace and are highly insoluble in relatively dilute water solutions. Thus, the NSSC pulp digestor effluent is combined with the silicate-aluminate salt prior to its combustion in the recovery furnace. Sulfur dioxide is recovered directly from the furnace, and sodium values are recovered when the smelt from the recovery furnace is dissolved in water and silicate-aluminate compounds precipitate. These precipitated salts are recovered and recycled.

Sonoco is offering to license the process to interested parties. From the standpoint of pollution abatement, the advantage of the system lies in the recovery of sulfur dioxide directly without going through the sulfide stage. To date the only installation is the one in Hartsville, but Sonoco is said to be negotiating with several pulp mills.

b. Washing and Bleaching

(1) Displacement Washing

One reason the bleach plant effluent is so difficult to handle from a pollution point of view is that large quantities of water must be added to the pulp after each bleaching stage. This water greatly dilutes the dissolved organics and inorganics. A recent development by Kamyr, a Swedish firm, could permit the bleach plant operator to use less water and discharge a considerably more concentrated effluent. In the Kamyr process, the pulp is washed by displacement rather than by dilution. A number of these displacement washers are in commercial operation in bleach plants in North America and Europe.

A 150-tpd pilot bleach plant in Finland adds bleach chemicals as well as water in the diffusion washers. The pilot plant uses a single tower for three stages of bleaching, including washing between each stage. We understand that a substantial reduction in water usage, as well as higher concentration of dissolved solids in the mill effluent, has been achieved. At least one commercial unit based on the three-stage-bleach, single-tower principle is being constructed in the United States.

(2) Oxygen Bleaching

Oxygen is being used commercially in pulp bleaching as a substitute for the chlorination and extraction stages of conventional kraft bleaching. The advantages and results, from the standpoint of pollution, are similar to those experienced with oxygen pulping. The comparative economics of oxygen and conventional bleaching are similar. Thus, the major incentive for oxygen pulping is pollution abatement. Because oxygen pulp strength is sometimes lower than that of krafts, we expect that commercial use of the process will be limited unless process changes result in pulp strength improvements.

(3) Replacement of Chlorine with Chlorine Dioxide in Bleaching

Kraft pulp is conventionally bleached in four to six stages. A typical sequence would be chlorination followed by alkaline extraction, chlorine dioxide, alkaline extraction, and chlorine dioxide. The effluents from the first two stages (chlorination and alkaline extraction) contain substantial quantities of inorganic and organic chlorine compounds as well as nonchlorinated organics; these two effluent streams constitute a major pollution problem for the bleached kraft industry.

It has been found that if chlorine dioxide is added along with chlorine in the first stage, or if dioxide is added in an initial stage, followed by chlorination, the quantity of chlorine consumed can be reduced. The quantity of chlorine which can be eliminated is directly related to the quantity of chlorine dioxide used. (In principle, it is possible to substitute all of the chlorine with chlorine dioxide, but present economics permit only a partial substitution.) Chlorine dioxide has a much greater oxidizing power per

chlorine atom than chlorine; also, the mechanism of the chlorine dioxide action produces a smaller amount of chlorinated organics than does chlorine. Thus, the effluent from a chlorine dioxide stage is much less offensive than that from a chlorination stage. There has been a significant trend to replacement of chlorine with chlorine dioxide, and we expect this to continue.

(4) High-Consistency, Gas-Phase Bleaching

Similar reductions in water consumption and an increase in dissolved solids concentration in the mill bleach effluent can be achieved with gas-phase bleaching of high-consistency pulp. This concept has been developed at Paprican Laboratories in Montreal in cooperation with Impco and Ingersoll-Rand. The use of an Impco press enables the bleach plant operator to press the pulp to a solids content of 35-40%. A bleaching chemical such as chlorine is then applied in the gas phase. After the reaction has taken place, the pulp is dilution-washed by adding water to bring the pulp slurry to a 10% solids level and then repressing to 35-40% solids. Weyerhaeuser is operating a single-stage pilot plant on this principle; the results have not yet been made public.

(5) Ozone Bleaching of Mechanical and Chemical Pulps

The Norwegian Pulp and Paper Institute and others have found that application of ozone increases considerably the strength properties of mechanical pulps as well as their brightness. The treatment is carried out on pulp of 30-50% consistency by contacting the fluffed pulp with gaseous ozone; no other additives are used. In an alternative approach developed at the Pulp and Paper Research Institute of Canada, the high-consistency pulp is first treated with peroxide and then ozone.

Both processes claim to double the tensile strength of mechanical pulps and significantly increase brightness. The Norwegian workers have applied ozone to RMP and TMP and obtained tensile strength increases as well as substantial increases in tear strength. They have also observed a yield loss of about 2% for every 1% ozone added.

Both the Norwegian and the PPRIC ozone processes are still in the laboratory stage. One of the problems in commercializing ozone bleaching has been difficulties in duplicating some of the PPRIC results; the presence of some trace metals, such as aluminum, seems to have unexpected and deleterious effects.

The Norwegians have also experimented with ozone in a kraft bleaching sequence. When bleaching pulp to 90% brightness, they report the pulp is weaker than conventional kraft bleached pulp. However, when the pulp was bleached to 70% brightness, they were able to get equivalent strength properites.

Scott has published the results of its use of ozone as one of the stages in a multistage bleaching sequence for kraft hardwood pulps. Pilot-plant trials were conducted on that process. There are no commercial installations to our knowledge.

3. Impact on Energy Consumption and Pollution Load

a. Pulping and Recovery

The solvent pulping systems -- alcohol, dioxane, ketone, amine, hydrotropic -- would probably have only a small effect on energy consumption, assuming that dissolved organic material (chiefly lignin) could be recovered and burned for heat generation. The air and water pollution load would certainly be different from that of kraft and would vary with the particular solvent used. In general, there would be less airborne particulate matter and no sulfur compounds in the air or water. However, large quantities of solvent are required, and even in the best recovery system some solvent would escape to the air and to the liquid effluent; the effect on pollution load would have to be investigated for each proposed process. We have already discussed the possibility that amine pulping would pose a severe odor problem. Thus, we see no compelling reason, either from the standpoint of energy or pollution load, to pursue any of the solvent pulping systems.

Peracetic acid could have a major effect on energy consumption as well as pollution load. A much higher yield than in the standard kraft process is possible, so dissolved organics (hence, recovered energy per ton of pulp) would be substantially lower. This is partially offset by the fact that the process could be carried out at atmospheric pressure, which would permit some reduction in process energy requirements. Since no sulfur is used, there would be no air pollution problem from SO_2 or TRS, but potential pollution of the water effluent by peracetic acid would have to be considered carefully. Finally, the problem of regenerating peracetic acid economically is not yet solved; a successful regeneration process could have a large effect on energy and pollution.

Hydrogenation pulping and biological pulping are probably the least polluting of any of the new processes under consideration. The biological approach would consume less energy, whereas hydrogenation pulping might be a much higher energy consumer because of the need to conduct hydrogenation at extremely high pressures. Both of these processes, however, are still in the early laboratory stages.

The ammonia explosion process suffers from one major disadvantage -- the use of large amounts of ammonia and the potential problem from the chemical in the pulp mill effluent. This, plus the technical difficulties in further treatment of the exploded pulp, have greatly diminished interest in the process.

The proposed kraft pulping modifications -- hydrogen sulfide pretreatment, polysulfide, hydrosulfide/sulfite -- would have only a minor influence on energy consumption but could increase sulfur emissions because of the larger quantities of sulfur used in these processes.

The sulfur-free NSSC pulping systems offer obvious advantages of freedom from air and water contamination by sulfur compounds, but they should not alter

energy consumption dramatically. The green liquor in NSSC pulping probably has little effect on energy consumption or pollution load, assuming that the NSSC recovery process used for comparison goes through the sulfide stage.

The Sonoco recovery system for sulfite liquors offers promise of reduced pollution load, because it does not take the sulfur through the reduced sulfide form. It should have little effect on energy consumption.

b. Washing and Bleaching

We expect that displacement washing will save energy as well as reduce the effluent load on pollution control facilities. Energy consumed in handling the pulp (pumping diluted stock, rethickening, etc.) will be considerably reduced, as will the volume of liquid handled, because there is no need to dilute the stock between bleach stages.

Oxygen bleaching could have a major impact on pollution load, since the effluent from the oxygen bleach stage can be recycled into the kraft mill and the dissolved organics are eventually burned in the recovery furnace. The net impact on energy consumption, however, is small. Most of the energy consumed in making the chemicals for either conventional or oxygen bleaching is for the sodium chlorate used for on-site generation of chlorine dioxide; substitution of oxygen for chlorine therefore has very little effect on the overall energy consumed.

Replacement of chlorine with chlorine dioxide has an important effect on pollution load. The effluent from the chlorine dioxide stage is less troublesome in this respect. Not only will there be a lower concentration of chlorinated organics, but the color of the effluent from the succeeding extraction stage will be lowered. It has been reported that a 50-50 substitution of chlorine by chlorine dioxide followed by an alkaline extraction stage with some hypochlorite in it will reduce the color of the second-stage effluent by as much as 80%.*

Although sodium chlorate, the starting material for chlorine dioxide, is a high energy consumer, the chlorine dioxide has a much higher oxidizing power than chlorine. When these two chemicals are compared on an oxidizing basis, the power consumption is equivalent; thus, the substitution of chlorine dioxide for chlorine has little effect on energy consumption in bleaching.

High-consistency vapor-phase bleaching will result in a lower volume of effluent to be treated, although the BOD loading will be the same as in conventional bleaching. The energy saved in not having to pump large quantities of water may be balanced by the increased energy consumed in pressing the pulp to high consistencies.

---

*J.L. Morrison, "Bleach Modifications to Reduce Pollutants," Weyerhaeuser Co., Pulp Development Laboratory, Everett, Washington. (Undated)

Ozone bleaching of groundwood could reduce the pollution load from mechanical pulping, but the energy requirement would be higher. In either case, the impact on industry energy consumption and pollution load would be small.

E. PAPERMAKING

1. Standard Technology

Most pulps must be beaten (i.e., subjected to mechanical action in dilute water suspension) to develop the desired paper or board properties. In the beating step the pulp fiber becomes much more flexible as the result of being plasticized by water of hydration. In addition, the fiber surfaces are abraded, which enormously increases the available surface area. The degree of beating varies according to the desired product properties. In sanitary tissues a low degree of bonding is required, so the pulp fibers are beaten lightly; with dense, highly bonded products such as glassine, the fibers must be beaten heavily.

The basic papermaking process has changed little in the past 100 years. A dilute, aqueous suspension of fibers is poured onto a moving, endless screen belt, and the free water is drained off with the aid of suction boxes. Consistencies* of 0.2-0.8% are conventionally used for the dilute slurry, and the consistency of the web at the end of the wire is 12-14%. Thus, for every pound of fiber leaving the end of the forming section, about 190 pounds of water must be removed on the wire and recycled for reuse.

The sheet which comes off the wire at 14% consistency next goes through a series of presses that remove another 5 pounds of water per pound of fiber, raising the consistency to 40-45%. The remaining water (about 2-1/3 pounds per pound of fiber) is removed by running the paper over a series of heated drum rolls, or in some cases by running the sheet through ovens with high-velocity hot-air jets impinging on the surface. Taking into account all water that is reused within and between processes, the net water usage is about 8-10,000 gallons per ton of paper produced.

Many of the complexities of papermaking are due to the necessity for handling large quantities of water and then removing it from the fibers. In addition, the drying is the major energy-consuming step in the pulp and paper industry. Thus, there is much interest in removing water more efficiently in the papermaking process and in making paper without the use of water. Process developments on alternative methods of water removal and drying were not selected for in-depth analysis in this study, because the experimental work (see below) is at such an early stage that new techniques are unlikely to reach commercial use within the next 5-10 years. Moreover, we do not believe that any detrimental impact will result from developments in this area.

---

*Ratio of fiber to water (by weight).

2. New Technology

a. Stock Preparation

Because energy consumption can be high in the beating step, and also because the fibers are severely cut by heavy beating, attempts have been made to achieve the effects of beating by adding certain chemicals. Some of these, such as starch or carboxymethyl cellulose (CMC), are simply adhesives that bind the pulp fibers together. Others are true cellulose plasticizing agents and help to flexibilize the fiber; urea is one chemical that has been suggested for this purpose.

Unfortunately, neither of the above chemical approaches significantly increases the fiber surface, which is probably the major benefit of the beating step. A number of years ago, DuPont developed a polymeric bonding agent made up of fine particles with a very high surface area. These "fibrids" were promoted as strength additives for unbeaten pulp. However, despite successful commercial experience in the bonding of high-value specialty webs with "fibrids," the materials were withdrawn from the market by DuPont, apparently because of unfavorable economics.

At present, the use of additives is combined with beating to promote higher strength levels in certain products. A high-molecular-weight CMC which swells but does not completely dissolve is used in some cases. In others, cationic substances (either modified starches or synthetic polymers) are used. The cationic materials are deposited onto the fiber surfaces, so chemical economy is achieved with only minor quantities of dissolved organics appearing in the effluent. However, no economical ways have been found to obtain the combination of fiber softening and surface area development achieved by beating.

b. Forming

(1) Dry Forming

There are a number of potential advantages in using air to replace water in paper and paperboard formation. In addition to the obvious lack of water pollution and freedom from the need for process water, these advantages include much smaller economic-sized units that can (a) locate in urban areas close to the markets, (b) handle slow-draining fibers, and (c) have the potential to create unique product properties which are not obtainable with a wet system. On the other hand, there are certain major negatives: (a) the problem of attaining sufficient strength and other physical properties with economic quantities of binder, (b) unsuitability of slush pulp as a starting material, and (c) difficulties in dispersing, cleaning, and bleaching secondary fiber.

ADL conducted a study of dry forming technology in 1970* and has recently updated this study.** The findings of the more recent study indicate that there are no ready solutions to the above problems and that the technique will not be important in production of commodity grades until these technical difficulties have been removed.

(2) RAD-FOAM Formation

An ingenious new approach to formation of paper at higher consistencies has been developed by Wiggins Teape Ltd. In the process, the pulp-water slurry is mixed with a foaming agent to form a thixotropic foam. The resulting semi-liquid mass is metered onto a wire subjected to agitation (high frequency pulses). The agitation causes the thixotropic foam to break down and release the water. The sheet is then dewatered and processed in the conventional fashion while the drained effluent containing the foaming agent is recycled.

The technique was developed originally to enable the formation of wood pulp long-fiber mixtures without the fiber entanglement and clotting usually encountered with such fiber blends. It also gives an unusually bulky sheet with good formation and with higher headbox consistency than in the conventional papermaking system.

One paper machine in the U.K. has been converted to the RAD-FOAM process. The machine is said to be making filter papers, for which bulk and uniformity are especially desirable. Wiggins Teape is actively seeking to license its process, but to our knowledge no one in the United States is utilizing the process commercially.

(3) High-Consistency Former

Headboxes that permit forming at a higher consistency have been developed recently by the Swedish Cellulose Research Institute of Stockholm and by Dr. Otto Kallmes-Lodding in the United States. In both instances, the objective has been to raise headbox consistency into the 2-4% range. The secret of attaining this consistency is to disperse the fibers well at the higher consistency prior to jetting the fiber suspension onto the wire, since there is little or no opportunity to improve uniformity after the fiber has gone onto the wire. Expected advantages of the high-consistency approach are substantial reductions in capital equipment (pumps, tanks, pipes, etc.), much better retention of fines and fillers, and a reduction in the net consumption of water by the paper machine.

---

*Arthur D. Little, Inc., "Dry-Forming Processes for the Manufacture of Paper and Paperboard," Cambridge, Massachusetts, December 1970.

**Arthur D. Little, Inc., "Commercial Status of Dry-Forming Processes," Cambridge, Massachusetts, January 1976.

The Finnish firm Ahlstrom has been licensed to manufacture and sell the Swedish Cellulose Research Institute high-consistency headbox. The company had been operating the headbox on one of its own pulp machines but was forced to remove it because of the lack of uniformity of the pulp sheet. The headbox failed, according to Swedish Cellulose Research personnel, because all of the dimensions had been scaled up to accommodate the heavy-basis-weight pulp sheet. In the scaling up, the flow path just prior to the slice had been enlarged excessively. The proper design of the headbox requires a channel prior to the slice small enough to prevent the reflocculation of pulp fibers. Another headbox, properly designed, is being installed on a fine paper machine by Ahlstrom and will start up soon.

The Kallmes-Lodding headbox is installed on a newsprint machine at MacMillan Bloedel and on a tissue machine at Patrician. Our industry contacts report that the headbox has not operated satisfactorily on the newsprint machine. Results of the headbox on the tissue machine appear to be more favorable, although we have not had an opportunity to inspect the installation. We believe that considerable development work will be needed before the high-consistency headbox can match the formation and uniformity obtainable from conventional headboxes.

(4) Twin-Wire Formers

Until very recently, all paper machines were of the Fourdrinier design--that is, the dilute stock from the headbox was jetted through the headbox slice onto a single, horizontal, moving wire. Downward drainage of the water was assisted with table rolls or foils on the underside of the wire and finally by suction boxes. This system is assumed in our base line model.

In the 1960's the concept of forming between two wire screens, so that water could be drained from both sides, was introduced to commercial operation. Some of the sought-after advantages of twin-wire formation in newsprint are avoidance of the two-sided sheet, better formation, less linting or fewer unbonded particles on the sheet surface, higher machine-speed capabilities, and more trouble-free operation. A number of variations on the twin-wire theme are now in use, and many of the expected advantages of this new forming concept are being realized. The Papriformer, described below, is one example of these twin-wire machines.

The pioneering design work for the Papriformer was done at the PPRIC, and the commercial design was developed in cooperation with Dominion Engineering. The headbox ("Floset"), a bunched-tube design with no air pad, delivers the stock through a tapered header to the slice. The jet goes horizontally between two wires, which then go up and over an open forming roll, from which it is transferred to a couch roll in an 'S' pattern. The open-surface forming roll utilizes a vacuum box. The drilled couch roll uses a pressure box and then vacuum boxes to force water from the sheet. Finally, the sheet leaves the former on top of the front wire as

in a conventional Fourdrinier. As this design is completely free of stationary elements in the forming area, there are no sliding contacts with the wires.

(5) Multi-ply Formation on a Fourdrinier

Beloit has developed the concept of applying different pulp stocks to a single headbox with provisions for keeping the different types of fiber separate (Strata-Flow Headbox). This headbox has been installed on the linerboard machine at the Oppala Mill built by Svenska Cellulose-St. Regis. The machine is supplied with virgin unbleached kraft linerboard-grade pulp for the outer plies and secondary fiber for the inner ply. It is said to be operating satisfactorily and making a good quality linerboard.

The concept has applicability both in surfacing secondary fiber stock with virgin pulp having desirable properties for specific applications and in constructing a sheet with strength elements in the interior and functional elements, such as pulp with good printability, on the surface.

(6) ECHO Machine

As shown in section C-1 of this chapter, the papermaking step is by far the single largest consumer of purchased energy in an integrated kraft pulp and paper mill; the energy required in the pulping step comes primarily from residue fuel. More specifically, paper drying is the most important segment of energy usage in the papermaking operation; the amount required in sheet formation and mechanical water removal is small in comparison.

Recently, Mr. Eli Cowan of E&B Cowan Limited (Montreal) and Holder Associates (Bury, England) have proposed an interesting new concept to reduce energy usage in the papermaking operation. Their proposed "ECHO" machine (an acronym for Eli Cowan-Holder) would include a twin-wire forming section and special drying techniques for more efficient water removal. Substantial energy savings would be realized by the use of a gas turbine drive on the machine and vapor recompression of the exhaust from the dryers.

Mr. Cowan earlier claimed that this integrated use of energy would reduce consumption by 15-30% compared with conventional techniques of papermaking, the range reflecting variations in the point of comparison (different grades of paper have different energy usage efficiencies) and possible inaccuracies in the estimated energy requirements for the ECHO machine. However, more recent information developed by Cowan and his associates indicates that the potential savings may have been overestimated.

c. Mechanical Water Removal

Despite many improvements in press design and press materials, the design press moisture of paper machines has decreased only modestly over the past 15 years. Data on the design press moisture of Canadian newsprint machines from 1956 to 1970* indicate that the average moisture dropped from about 66% to 61% during this period.

To increase paper machine speed, it will be necessary to find ways of reducing the moisture in the newly formed sheet before the first open draw (i.e., the point in the papermaking process where it is unsupported by either a wire or a felt). The conventional nip-felt system has a major drawback that limits the percent moisture attainable -- the paper is rewetted by excess water on the surface of the felt when the paper and the felt separate.** One approach to solving this problem is the extended nip, which provides time for the moisture to flow away from the felt surface and so reduces opportunities for rewetting when the felt and paper separate. Beloit has obtained encouraging results with a laboratory model of an extended-nip press, but it has not yet been commercialized; one of the problems may be in obtaining mechanical reliability in a high-speed, wide commercial press.

A device based on another approach has been described by a Polish research worker.*** This device consists of a suction roll and an air chamber formed by positioning three rolls with end seals over the air chamber. The air cavity is pressurized to about two atmospheres. The press is reported to achieve a substantially lower moisture content than the conventional nip-felt arrangement.

Other possibilities have been suggested, including the use of a Yankee dryer (with a textured surface to prevent two-sidedness on the newsprint sheet), which would take the sheet directly from the last press without a draw and reduce the moisture to 35-45% before it is transferred in an open draw to the dryer cans.

*Pulp & Paper Magazine of Canada, Vol. 73, No. 3 (March 1972), pp. 40-45.

**Wahlstrom, Pulp & Paper Magazine of Canada, Vol. 70, No. 19 (1969), p. 76.

***Krapkowice, Przeglad Papier, Vol. 28, No. 11 (November 1972), pp. 81-88.

d. Drying

Heated drums or cans with dryer felts have been standard in the paper industry for many years. Improvements in dryer felt design and materials, use of pocket ventilation techniques, and higher headbox temperatures have improved the efficiency of dryer cans considerably over the years. Nevertheless, the dryer section of a paper machine remains one of the major capital cost items in the process train.

The Papridryer represents one approach to reducing the number of dryer cans and improving heat economy. This dryer was developed at PPRIC, and a pilot unit has been installed at the Three Rivers mill of Canadian International Paper Co. The sheet wraps around a grilled dryer roll operated under vacuum and is contacted by high-temperature air that is circulated to the unit in a hood. The pilot operation of the Papridryer was successful, and laboratory results were confirmed--high drying rates were achieved, and it was possible to level out the moisture profile. However, energy consumption was high, and capital costs were not substantially lower than for conventional dryer cans. Successful commercial use of the Papridryer appears to depend on the availability of a source of waste heat, such as the tail gases from a gas turbine.

Microwave drying of paper has been studied extensively. Its effectiveness varies with the electrical properties of the wet sheet; for maximum efficiency it is sometimes necessary to add an electrolyte. The principal incentive for the use of microwave drying appears to be its ability to selectively dry out wet streaks in the sheet. However, the zoned, electrically heated dryer roll marketed by Valmet of Finland can do the same thing at much lower cost.

Float drying has been developed (and commercialized) by Svenska Flakt to dry pulp and other heavy sheets. In float drying, the sheet is supported by air jets through the entire drying zone and is contacted by hot air. This technique has been applied to newsprint on an experimental basis. Because it dried with almost complete lack of restraints, the sheet showed a higher stretch, tear, and bulk.

Svenska Flakt representatives have stated that the present Flakt dryer design will not allow a lightweight sheet to be dried at over 2000 fpm without its breaking down in the dryer. The company is redesigning the dryer to accommodate a lightweight, relatively weak sheet, such as newsprint, at higher speed.

3. New Technology: Energy and Pollution Considerations

The paper and board portion of the industry consumes the largest portion of the industry's purchased energy requirements--close to 80%. The drying step, removal of retained water after the press section, is the largest single energy-consuming step in paper and board production.

Two developments which could produce a major change in energy consumption in drying are dry-forming of paper and new press techniques which would allow a higher consistency before the paper goes into the heated dryer can. Various evolutionary-type improvements in each of these areas could bring about some reduction in energy usage, but major technological breakthroughs are required for significant savings. Because of the extended time required to translate R&D objectives to commercial reality in this industry, we do not expect major changes within the next several years. This is not to imply that the industry is indifferent to the energy (hence cost) savings to be achieved in these areas; rather, it reflects two basic facts:

- The industry is so capital-intensive that it is unlikely to abandon existing equipment readily.
- Massive, high-speed equipment is used in water removal and paper drying; hence, the development and commercialization of new technology and equipment is an expensive, time-consuming process.

Other developments in the forming area are evolutionary and would produce only minor changes in energy consumption. These include chemical additives to simulate the effects of beating, high-consistency forming by the RAD-FOAM process or others, twin-wire formers, and multi-ply formation from a single headbox.

No developments in drying show promise of becoming commercially important for the next 5-10 years and/or of changing the energy consumption pattern of the paper and board industry. A possible exception is flow-through drying, which is being used on lightweight tissues and might be used for other lightweight papers. Its use in tissues, however, is directed at improved physical properties (bulk, softness, etc.) rather than at energy savings. In fact, it is the practice in some machines to press to a lower consistency and thus go into the flowthrough dryer section with a bulkier although wetter sheet than is normal.

Application of flowthrough drying to such lighter weight sheets as newsprint is technically feasible, but economics and energy savings depend upon having a low-cost source of hot air. One such source would be the off-gases from a gas-turbine-driven paper machine. While there has been considerable interest in this area and some development work has been carried out, we do not expect the new technology to be used to such an extent that it will have a major effect on the industry's energy requirements within the next 5-10 years.

F. INDUSTRIAL PRACTICE

1. All-Kraft Newsprint

One of the largest applications for the high-energy-consuming mechanical pulps is newsprint. In making newsprint from Southern Pine, for example, 70% mechanical pulp and 30% semi-bleached kraft is used. Semi-bleached kraft pulp is a low net energy consumer, but the manufacture of mechanical pulp consumes about 2000 kWh per ton.

It has been proposed* that the newsprint industry might significantly reduce its energy consumption by making a lightweight newsprint with an all-kraft hardwood/softwood pulp mixture. The kraft pulp would have a substantially higher tensile strength than the mechanical pulp and so make it possible to make a newsprint sheet with desired functional properties at a lower basis weight--say 20 pounds--than the more conventional 30-pound mechanical-kraft newsprint. Such an all-kraft newsprint sheet would consume substantially less energy. Interestingly enough, it also would consume no more wood (assuming a 50-50 mixture of hardwood and softwood and 20-pound sheet) than the conventional southern newsprint. Technical work is required to develop a sheet of paper with the required functional properties from an all-kraft furnish.

2. Coated Unbleached Kraft Board

The coating of unbleached kraft board as a substitute for recycled paperboard and solid bleached sulfate (SBS) board is a demonstrated commercial practice. Olinkraft and Mead presently make this product. It is being used only as carrier board to replace recycled paperboard, but if it were used as a replacement for SBS board, it would have significant energy and pollution reduction implications.

As noted earlier, the bleaching of kraft pulp requires a significant amount of energy and contributes significantly to the total water effluent volume and pollutants. The manufacture of an SBS replacement that needed no bleaching would thus provide a significant benefit.

---

*Arthur D. Little, Inc., "Threats and Opportunities Within the Newsprint-Newspaper Industry," Cambridge, Massachusetts, October 1974.

Although we do not have hard data to compare the properties of coated unbleached kraft board to SBS board, we believe its physical and printing properties would be suitable in many applications presently served by SBS. Thus, while there is no potential conflict between energy saving techniques and pollution regulations, this may be an area of interest to EPA.

3. Lower-Brightness Pulp

Brightness standards for most bleached market pulps are in the 90-92% range, and brightness levels in mills making pulp for an integrated operation are similar. Bleach chemical consumption could be lowered if the brightness standards were relaxed. Obviously, the magnitude of the chemical savings would depend upon how much reduction was adopted.

We do not see any U.S. trend toward lower brightness levels in any products. Even if the pulp manufacturers were to offer an 80-brightness pulp at a discount, the pulp cost, and hence the magnitude of the savings, is such a small part of the delivered price of a product such as facial tissue that the marketer of the tissue would have very little economic incentive to buy it. The consumer appeal of high brightness, on the other hand, is such that the seller has enormous incentive to seek the higher-brightness pulp. Thus, we see no chance of a consumer or paper industry move to lower brightness levels. The only effective way of bringing about such a change would be via federal legislation.

4. Increased Use of Secondary Fiber

The increased use of secondary fiber in newsprint manufacture is discussed in detail in section D of the next chapter. In summary, however, the use of old newsprint as a partial or complete replacement for mechanical pulp results in substantial energy savings without any significant impact upon pollution from the paper mill either beneficial or adverse.

In containerboard, on the other hand, a comparison of energy usage shows the converse relationship: the use of secondary fiber as a complete replacement for unbleached kraft linerboard requires more purchased energy. Thus, while the energy needed to make unbleached kraft pulp and board is significantly higher than that for recycled (jute) linerboard, the substantial amount of energy recovered from residue fuels results in a lower net amount of energy than that required for recycled linerboard. Pollution considerations do not appear to conflict with the broader application of recycled fiber.

V. DETAILED ANALYSIS OF SELECTED ALTERNATIVES

This section deals with the technical, economic, and energy/pollution characteristics of the four process changes selected for detailed analysis. Much of the technical and energy/pollution-related information was obtained in interviews with industry personnel working in the respective areas. However, the economic analyses of the processes are based upon ADL estimates.

The characteristics of process effluents and the associated cost of treatment are discussed in Appendix C, both for the processes analyzed in this Section and for other major processes used in the industry.

While the technical/economic information pertaining to current practices may be considered "hard data," that for three out of the four studied alternatives consists of "best estimates" by informed individuals: only in the case of newsprint from recycled old news is there sufficient commercial experience to support the data used in this analysis.

The costs that are used reflect current conditions for the particular type of pulping process involved. Reasonable assumptions about size, location, and certain economic factors have been made for individual processes. Thus, while the examples may not be consistent overall, each is internally consistent.

Appendix B presents information pertinent to the energy usage and material balances for the other major processes that have not been included here.

A. ALKALINE-OXYGEN PULPING*

1. Process Description

The alkaline-oxygen (A-O) pulping process is receiving intense industry interest because of its potential for a nonsulfur cooking step, which would eliminate the air pollution from malodorous sulfur compounds and greatly alleviate the bleach plant effluent problem.

A wide variety of process steps could be used, but the sequence presently receiving the greatest commercial interest involves an alkaline treatment to soften the wood chips, mechanical disintegration, and treatment with oxygen under alkaline conditions to remove most of the remaining lignin; this is followed by the last three stages of the conventional multi-stage sequence -- chlorine dioxide, caustic extraction, and chlorine dioxide.

*Information on A-O pulping was obtained, in part, from discussions with representatives of Weyerhaeuser Co., E.D. Jones Division of Beloit Corp., and EPA (Corvallis, Ore.).

The wood chips are first treated under conditions similar to those of the kraft cooking process. The softened chips are discharged to disc refiners and disintegrated mechanically while still under pressure. The resulting pulp is washed and separated from the black liquor, as in the kraft process. The pulp is then treated with high-purity oxygen under alkaline conditions at about 250°F and about ten atmospheres pressure. Continuous process towers are used so that the net consumption of oxygen is about 2.5% per ADT, based on ingoing pulp.

At the end of the oxygen reaction time the pulp is washed again in countercurrent washers and sent to the remaining three bleach stages. The overall yield of pulp is somewhat greater than with the kraft process (47% versus 42%).

In contrast to the standard kraft process, black liquor from the oxygen stage can be recycled to the recovery unit, since it does not contain chlorides. Thus, a portion of it can be used as process water in the pulp mill; the remainder can be combined with the effluent from the alkaline-oxygen stage and then evaporated and burned in the recovery boiler to recover heat and sodium carbonate. The carbonate is treated with lime, which regenerates sodium hydroxide for recycle to the first (wood-softening) and second (oxygenation) stages.

2. Energy Consumption and Pollution Load

There are many differences in both energy consumption and pollution load between A-O pulping and kraft pulping. However, the energy generated in the recovery boilers in the two processes should be about the same, since the lower overall dissolved organic yield (i.e., higher pulp yield) from A-O pulping should be offset by a somewhat higher quantity of recovered dissolved organics as a result of using the oxygen delignification effluent in the recovery unit. Energy consumption in the pulping stage itself would probably be higher in an A-O system because of the energy consumed in the pulp disintegration stage.

A generalized material and energy balance for the A-O pulping and bleaching process is shown in Figure V-1. Table V-1, where energy usage by process step is derived, indicates that about 20 million Btu of purchased energy is required to make a ton of bleached slush pulp by this new process. By comparison, about 24 million Btu of energy is required in the conventional kraft pulping and bleaching process (see Table IV-2 in preceding section). As discussed previously, the energy requirements for converting the interim product (pulp) into paper or paperboard are about the same for the alternative types of pulp.

Table V-2 summarizes energy requirements as well as air and water emission characteristics for the A-O process. Note that the energy requirements do not include the preparation of either oxygen in the A-O process or chlorine/caustic in the standard kraft process. These are not considered here, because this analysis concerns the energy used in the direct manufacturing process, not the related energy used in either chemical preparation or transport of

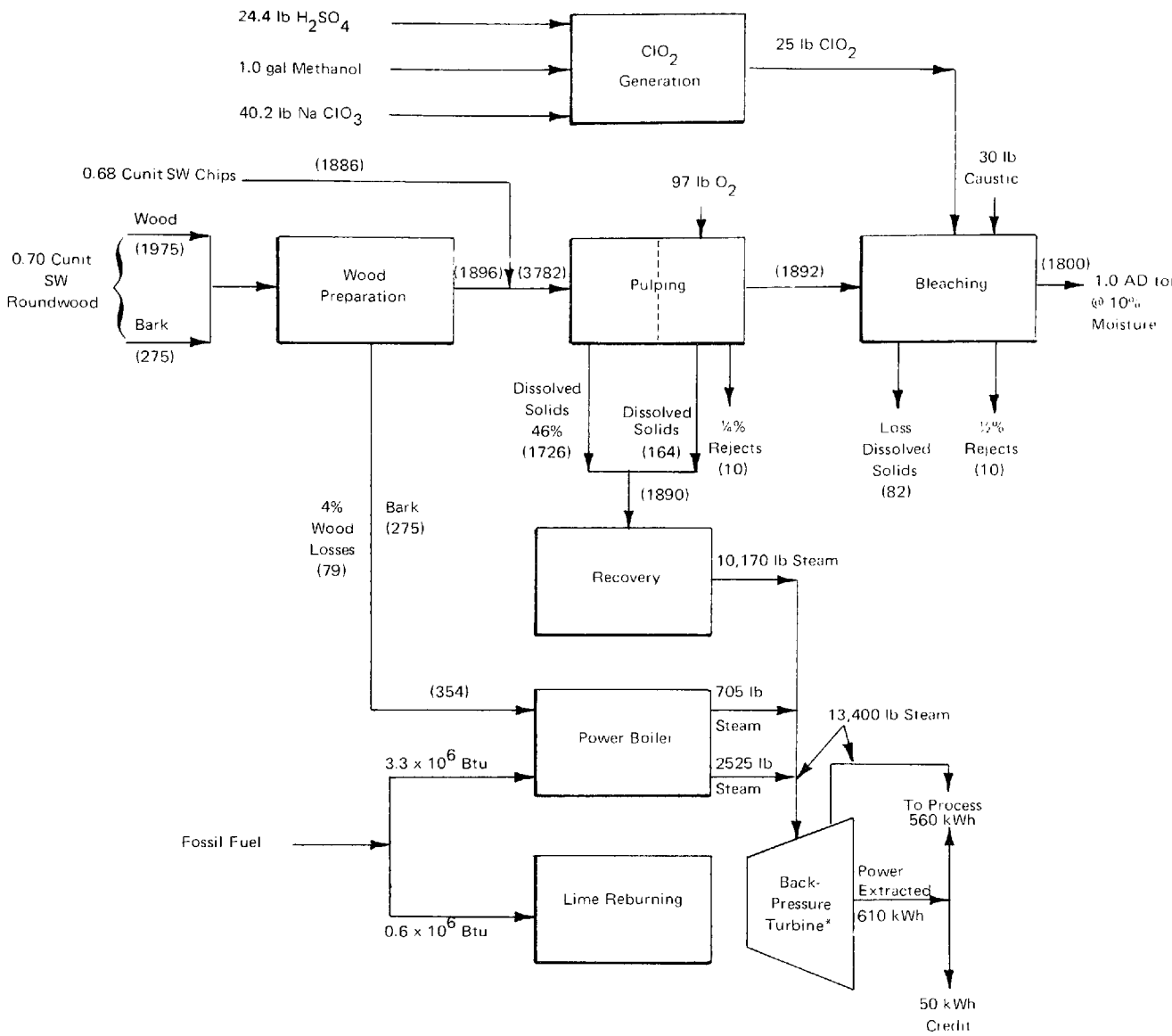

Basis: 1.0 ADT slush pulp

( ) Indicates bone-dry (BD) lb; 1.0 air-dry (AD) ton = 1800 BD lb
1 cunit = 100 ft^3 of solid wood; weight per BD cunit ranges from about 2200 lb to 3400 lb, depending on wood species.
*Heat-to-power conversion in this type of turbine is typically about 4000 Btu/kWh.

Source: Arthur D. Little, Inc., estimates

Figure V-1. Material and Energy Balance for A-O Slush Pulp

TABLE V-1

ENERGY REQUIREMENTS FOR A-O SLUSH PULP (47% YIELD), BY MAJOR PROCESS STEP

	Steam		Power		Total
	(lb/ADT)	(10^6 Btu/ADT	(kWh/ADT)	(10^6 Btu/ADT)	(10^6 Btu/ADT)
Wood Preparation	-	-	97	0.4	0.4
Pulping	3,800	4.9	200	0.8	5.7
Bleaching	5,600	7.3	57	0.2	7.5
Chemical Recovery	3,200	4.2	127	0.5	4.7
Liquor Preparation	300	0.4	10	0.1	0.5
Water Treatment & Effluent Disposal	-	-	57	0.2	0.2
Shops, Stores, Misc.	500	0.7	15	0.1	0.8
Lime Reburning[a]	-	-	-	-	0.6[a]
TOTAL (Pulp Manufacture)	13,400	17.5	563	2.3	20.4
Paper or Board Prod.	8,500	11.0	400	1.6	12.6
TOTAL	21,900	28.5	963	3.9	33.0

[a] This is fuel burned directly in lime reburning step and not converted to either steam or electric power.

Source: Arthur D. Little, Inc. estimates

TABLE V-2

SUMMARY - ENERGY CONSUMPTION AND POLLUTION LOADS, A-O PROCESS

	Wood Preparation	Pulping	Bleaching	Chemical Recovery & Liquor Preparation	Misc. and Auxiliaries	Water Effluent Treatment	Total
Energy Consumption (10^6 Btu/ton)							
Fuel (Lime Reburning)	-	-	-	-	0.6	-	0.6
Steam	-	4.9	7.3	4.6	0.7	-	17.5
Power	0.4	0.8	0.2	0.6	0.1	0.2	2.3
Total Energy	0.4	5.7	7.5	5.2	1.4	0.2	20.4
Recovered Energy	(1.0)	-	-	(15.1)	-	-	(16.1)
Net Purchased Energy	(0.6)	5.7	7.5	(9.9)	1.4	0.2	4.3
Water Effluent Loads							
Total flow (000 gal/ton)	1	6	19	5	-	-	31
TSS (lb/ton)	8	17	14	27	-	-	66
BOD_5 (lb/ton)	2	10	13	8	-	-	33
Color (lb/ton)	14	32	100	4	-	-	150
Air Emissions							
Particulates (lb/ton)		0		146			146
TRS (lb/ton)		0		0			0

Source: Arthur D. Little, Inc. estimates.

raw materials and finished goods. The reader is referred to the industry sector reports on copper and chlor-alkali, which show the derivation of energy used in the preparation of oxygen and chlorine/caustic.*

Comparison of Table V-2 with similar information for the standard bleached kraft process (Table IV-1) clearly indicates that the principal advantages of the A-O process over standard kraft would be the reduction of color emitted from the bleach plant** and the complete elimination of TRS from the chemical recovery step. The calculations also indicate a significant energy saving with the A-O process, not only in terms of the total amount (20.4 versus 25.4 million Btu/ADT) but, more importantly, in the portion that must be purchased (4.3 versus 7.4 million Btu/ADT). However, we must emphasize that the energy usage for standard kraft is based on years of commercial operating experience, while data for A-O are relatively tentative, the first commercial installation being only in the start-up stage.

Since sulfur is not used, there is no problem of TRS in the air emissions. In addition, although no odor-control standards have been set for kraft mills, the odors associated with that process are sulfur-related and thus should be eliminated with A-O. With regard to water pollution, total flow is about the same for either process; however, elimination of two of the standard kraft bleach stages should result in a 50% reduction in both BOD and color for A-O compared with kraft.

Estimated process economics for the A-O process are shown in Table V-3. A summary comparison of A-O with standard kraft (Table V-4) indicates that there would be a substantial reduction in initial plant investment and operating costs with the A-O process. Thus, in addition to potential reductions in purchased energy and effluent emissions, A-O has potential economic advantages over the standard kraft process. The comparison is not precise, however, because the A-O process may not be a direct substitute for kraft pulping, as explained below. Table V-5 provides supporting data pertaining to the process economics of the standard kraft pulping and bleaching process.

3. Quality and Cost Comparison

The relative quality of A-O and kraft pulps is not yet clearly established. With softwoods, the A-O pulp strength levels appear to be somewhat lower than those of the kraft process at high (i.e., 90%) brightness levels. If brightness specifications are relaxed somewhat, the A-O pulp strength becomes more competitive with kraft. As more is learned about A-O pulping, these differences are decreasing.

---

*Energy consumption per ton of oxygen = 360 kWh, or about 3.6×10^6 Btu; consumption per ton of chlorine/caustic = 40×10^6 Btu (1 ton Cl_2 + 1.055 ton NaOH).

**An alternative method for eliminating color from the bleach plant is discussed under the Rapson effluent-free kraft process.

TABLE V-3

STANDARD BLEACHED A-O SLUSH PULP INVESTMENT AND PRODUCTION COSTS

Product: Slush pulp
Process: Std. Bl. Kraft
Location: Southeast
Byproducts: Turpentine
Fixed Investment:[a] $124 x 10^6
Depreciation Period (yr): 16
Annual/Design Capacity: 286,000 ADT
Working Capital: $9 x 10^6
Year Used for Costing Purposes: 1975
Annual Production: 276,000 ADT
Stream Days/Yr.: 345

A. MANUFACTURING COSTS PER UNIT OF PRODUCTION	Units Used in Costing or Annual Cost Basis	$/Unit	Units Consumed per Ton of Product	$/ADT of Product
VARIABLE COSTS				
Raw Materials				
• Pulpwood	Cunit	34	1.38	47.0
• Chemicals				16.0
Byproduct Credits				
• Turpentine				(1.0)
Energy				
• Purchased Fuel	10^6 Btu	1.90	4.3	8.0
• Electric Power Purch.			0	
Energy Credits				
• Electric Power	kWh	0.018	(50)	(1.0)
Water[b]				
• Process (Consumption)	10^3 gal	-	11	-
• Cooling (Circulating rate)	10^3 gal	-	20	-
Direct. Operating & Supv. Wages	Man-hr	6.1	0.7	4.0
Maintenance Labor & Supv. Wages	Man-hr	7.0	0.6	4.0
Maintenance Materials & Supp.				4.0
Labor Overhead	@ 32% Direct & Maintenance Wages			3.0
Misc. Variable Costs/Credits				
• Operating Supplies				1.0
Royalty Payments				
FIXED COSTS				
Plant Overhead	@ 50% Direct and Maintenance Wages			4.0
Local Taxes & Ins.	@ 2% Fixed Capital			9.0
Depreciation	@ 6-1/4% Fixed Capital			28.0
TOTAL PRODUCTION COSTS				126.0
Return on Investment (pretax) (incl. working capital)	@ 20% Total (Fixed & Working) Capital			96.0
POLLUTION CONTROL				34.0
TOTAL				256.0

[a]Based on manufacturing process only.

[b]The costs of supplying and treating process and cooling water are included in details of investment and operating costs; i.e., these costs include pumps, filters, power, labor, etc., for water supply but not effluent treatment.

TABLE V-3

STANDARD BLEACHED A-O SLUSH PULP INVESTMENT AND PRODUCTION COSTS (Cont.)

B. Derivation of Fixed Capital Costs and Pollution Control Operating Costs

FIXED CAPITAL COSTS:	$ million
• Direct Manufacturing	
Manufacturing Process	118.0
OSHA	1.5
Air Control[c]	2.6
Water Control[c]	2.0
	124.0
• Pollution Control	
Water - Internal	2.0
Water - External	12.0
Water - Color Removal	5.0
Air	2.4
	22.0

POLLUTION CONTROL OPERATING COSTS:	$/ADT
Operation & Maintenance	13.0
Depreciation @ 6-1/4%	5.0
Pretax R.O.I. @ 20%	16.0
	$34.0

[c]The amount that is economically justified, in that the value of the recovered product offsets the investment and operating cost of the installed equipment.

TABLE V-4

COMPARISON OF A-O AND STANDARD KRAFT SLUSH PULP
(New mill basis)

Item	Alternative Process A/O	Current Process Standard Kraft
Plant Investment incl. pollution control ($/million)	146	154
Operating Cost, incl. pollution control ($/ADT)	256	290
Purchased Energy (10^6 Btu/ADT)	4.3	7.2
Pollution Loads		
Water - Volume (10^3 gal/ton)	31	31
BOD_5 (lbs/ton)	33	66
TSS (lbs/ton)	66	66
Color (lbs/ton)	150	300
Air Emissions - Particulates (lb/ton)	146	200
TRS (lb/ton)	0	24

TABLE V-5

STANDARD BLEACHED KRAFT SLUSH PULP INVESTMENT AND PRODUCTION COSTS

Product: Slush Pulp
Byproducts: Turpentine
Annual/Design Capacity: 286,000 ADT
Annual Production: 276,000 ADT

Process: Std. Bl. Kraft,
Fixed Investment:[a] $130 x 10^6
Working Capital: $10 x 10^6
Stream Days/Yr.: 345

Location: Southeast
Depreciation Period (yr): 16
Year Used for Costing Purposes: 1975

A. MANUFACTURING COSTS	Units Used in Costing or Annual Cost Basis	$/Unit	Units Consumed per Ton of Product	$/ADT of Product
VARIABLE COSTS				
Raw Materials				
• Pulpwood	Cunits	34	1.57	53.0
• Chemicals				30.0
Byproduct Credits				
• Turpentine				(2.0)
Energy				
• Purchased Fuel	10^6 Btu	1.90	7.4	14.0
• Electric Power Purch.			0	
Energy Credits				
• Electric Power	kWh	0.018	140	(3.0)
Water[b]				
• Process (Consumption)	10^3 gal	-	11	-
• Cooling (Circulating rate)	10^3 gal	-	20	-
Direct. Operating & Supv. Wages	Man-hr	6.1	0.7	4.0
Maintenance Labor & Supv. Wages	Man-hr	7.0	0.6	4.0
Maintenance Materials & Supp.				5.0
Labor Overhead	@ 32% Direct & Maintenance Wages			3.0
Misc. Variable Costs/Credits				
• Operating Supplies				1.0
FIXED COSTS				
Plant Overhead	@ 50% Direct & Maintenance Wages			4.0
Local Taxes & Ins.	@ 2% Fixed Capital			9.0
Depreciation	@ 6-1/4% Fixed Capital			29.0
TOTAL PRODUCTION COSTS				151.0
Return on Investment (pretax) (incl. working capital)	@ 20% Total (Fixed & Working) Capital			101.0
POLLUTION CONTROL				38.0
TOTAL				290.0

[a]*Based on manufacturing process only.*

[b]The cost of supplying and treating process and cooling water are included in the details of investment and operating costs, i.e., these costs include pumps, filters, power, labor, etc., for water supply, but not effluent treatment.

TABLE V-5

STANDARD BLEACHED KRAFT SLUSH PULP INVESTMENT AND PRODUCTION COSTS (Cont.)

B. Derivation of Fixed Capital Costs and Pollution Control Operating Costs

FIXED CAPITAL COSTS:		$ million
• Direct Manufacturing		
Manufacturing Process		125.0
OSHA		1.5
Air Control[c]		2.6
Water Control[c]		2.0
	Use	130.0
• Pollution Control		
Water - Internal		2.0
Water - External		12.0
Water - Color Removal		7.0
Air		3.0
	Use	24.0

POLLUTION CONTROL OPERATING COSTS:		$/ADT
Operation and Maintenance		15.0
Depreciation @ 6-1/4%		5.4
Pretax R.O.I. @ 20%		17.4
	Use	$38.0

[c]The amount that is economically justified, in that the value of the recovered product offsets the investment and operating cost of the installed equipment.

The first alkaline-oxygen kraft pulp mill has been installed by Weyerhaeuser in Everett, Washington. The mill was built on an experimental basis with kraft pulping capabilities and provisions to convert to alkaline-oxygen. The mill began operation in 1975 and was recently switched over to the A-O process.

4. Summary

In comparison with the kraft process, preliminary results indicate that the A-O process could substantially alleviate water effluent problems and appreciably reduce the amount of purchased energy. Capital requirements for a grassroots mill also appear to be somewhat lower for the A-O process.

The major uncertainty with alkaline-oxygen is the quality of the pulp. At high brightness levels, quality appears to be lower than that of kraft. A commercial size, experimental A-O pulp mill has begun operation. With additional technical and operating experience, Weyerhaeuser may be able to improve the pulp quality; its success will strongly affect future acceptance of the process. Clearly, EPA should watch the results of this operation closely and participate in their evaluation.

B. RAPSON EFFLUENT-FREE KRAFT PROCESS*

1. Process Description

Professor W.H. Rapson of the University of Toronto has developed process plans for a completely effluent-free bleached kraft pulp mill. A joint venture company, Erco Envirotech Limited, was formed in 1972 to develop various elements of this mill. The Great Lakes Paper Co. is utilizing the results of the development work in the construction of an effluent-free kraft pulp mill at Thunder Bay, Ontario.

A number of changes in the conventional kraft pulping process are being made to eliminate effluents. The major ones are the following:

- Replacement (with chlorine dioxide) of about 70% of the chlorine normally used in the first-stage chlorination step. This stage is followed by the conventional sequence of caustic extraction, chlorine dioxide, etc. The overall bleach chemical input is adjusted so that the chlorine/chlorine dioxide ratio is the same as the output from an R-3 chlorine dioxide generater,** and the caustic is sufficient to combine with all the chlorine going into the bleach plant to form sodium chloride.

*Information on the Rapson process was obtained, in part, from discussions with representatives of Great Lakes Paper Co. and Erco Envirotech Ltd.

**A proprietary process, one of three alternative techniques used for generating chlorine dioxide.

- Countercurrent washing in the bleach plant. It is possible to reduce the total amount of fresh process water into the pulp mill from 25,000 to 4,000 gallons per ton. Fresh water in the closed system is used primarily for make-up to the bleach plant countercurrent washing process.

- Reuse of all bleach-plant effluent in the pulp mill. This is utilized in countercurrent brown-stock washers. In this manner, all of the bleach plant chemicals and dissolved organics eventually go to the recovery furnace.

- Removal of sodium chloride from the white liquor (i.e., recovered cooking liquor). This is accomplished by evaporating the recovered white liquor and filtering off the crystallized sodium chloride. The latter can then be used as make-up for chlorine dioxide generation and could be used as make-up for chlorate production.

- Use of the R-3 process for chlorine dioxide generation. In this process, byproduct sodium sulfate is crystallized from the aqueous sulfuric acid used as a reaction medium, and the sulfuric acid is recylced to the chlorine dioxide generator. Thus, the only byproduct output from the chlorine dioxide generator is solid sodium sulfate (saltcake). A portion of this recovered saltcake can be used as make-up chemical in the kraft pulp mill; however, most of it will be sold or discarded, since production will exceed make-up demand. Thunder Bay proposes to dissolve it in large quantities of clean sewer water (mainly cooling water and white liquor evaporator condensate) and discharge it to the sewer. An alternative is to utilize the so-called R-4 chlorine dioxide generation process, which differs from the R-3 only in that some of the sulfuric acid is replaced with hydrochloric acid to reduce the net quantity of saltcake effluent.

- Making various mill process changes to facilitate closing up the water system (condensate stripping to remove methanol, closing up the screen room, increased washing capacity, installation of spill tanks, etc.). As a result of these moves, a somewhat larger recovery furnace is required to accommodate the organics recycled from the bleach plant, and somewhat larger black liquor evaporation facilities are needed to handle the intermittent return of dilute effluent streams from the spill tanks.

2. Advantages

A number of advantages are expected with the Rapson process, in addition to the elimination of water effluent. These include a 1% higher pulp yield, better brightness stability, and better pulp strength as a result of the use of chlorine dioxide in the first stage, another 1% overall yield increase due to the higher percentage of recovered fiber, lower saltcake losses, a reduction

of steam consumption in the bleach plant (function of countercurrent washing), and an increase in steam generation as a result of the recovered organics from the bleach plant.

Erco estimates that bleach-plant steam requirements would be 30,000 lb/hr for a 900-tpd mill (800 lb steam/ton), compared with a minimum of 180,000 lb/hr (4800 lb/ton) for conventional kraft pulping. Actual savings may be even higher, since Great Lakes estimates 20,000 lb/hr for 750 tpd, and conventional kraft steam requirements can be substantially higher than 4800 lb/ton.

Additional steam requirements for white liquor evaporation (not required with conventional kraft) are about 2300 lb/ton. Additional organics recovered from bleach plant effluent and burned are estimated at 260 lb/ton of bleached pulp (5% reduction in yield on bleaching -- i.e., 48% yield unbleached, 43% bleached -- 5000 Btu/lb, and 65% efficiency of heat recovery). This represents close to 800 lb steam/ton bleached pulp, or approximately equal to closed-system bleach plant requirements. Thus, net steam savings are equivalent to conventional bleach plant requirements less the closed-system white liquor evaporator consumption. As estimated by Erco, this means a minimum net steam saving of 2500 lb/ton.

Erco representatives estimate that the cost of the salt recovery system is about $5 million for a 900-tpd mill. They quote Thunder Bay personnel as saying that the cost of their installation is about $8 million more than for the conventional kraft mill; however, they believe that water pollution control facilities for the effluent from the standard kraft mill would also cost $8 million. They estimate that the annual savings to the Thunder Bay mill would be in the order of $5 million. This is broken down as follows:

Steam savings	$ 840,000
Energy recovery	270,000
Increased fiber recovery	775,000
Yield increase	636,000
Chemical savings	1,000,000
Treatment of effluent	1,500,000
	$5,021,000

Neither Rapson nor Erco representatives anticipate any problems when the Great Lakes mill at Thunder Bay starts up in about one year. They discount the possibility of problems from the build-up of trace elements in the system. In fact, Rapson believes that there will be a positive effect from the build-up of potassium ions in the system. (Potassium hydroxide is a more effective pulping reagent than sodium hydroxide.) There will be a higher level of salt recycle than is normally found in an inland mill away from salt-water-borne logs. Erco representatives point out that coastal mills normally experience a build-up of salt, in some cases substantially higher than anticipated in the

Thunder Bay mill.* As far as they know, there is no need to use special materials of construction in the furnaces or to redesign them to accommodate this salt content. Special materials must be used in the washer, however.

3. Energy Consumption and Pollution Load

The information obtained from Erco was translated to our common capacity basis (800 tpd). A generalized material balance is shown in Figure V-2. Energy requirements are derived in Table V-6 and are summarized along with water effluent and air emissions loadings in Table V-7. The Rapson process economics, estimated from the data received from Erco, are indicated in Table V-8.

Energy requirements, pollution loads, and process economics for the process are compared with those for standard kraft pulping technology in Table V-9. This comparison clearly indicates the theoretical superiority of the Rapson process on all points. If operating experience confirms that the process performs as designed, it is reasonable to expect that it would become the chosen technology for new kraft pulping capacity. In addition, it would offer a cost- and energy-effective alternative to external effluent treatment for existing kraft mills to meet BAT (1983) effluent guidelines. It would probably receive substantial acceptance by existing mills.

C. THERMO-MECHANICAL PULPING**

1. Process Description

Mechanical pulp (i.e., wood reduced to fiber for grinding) is typically combined with chemical fiber and used primarily in the manufacture of newsprint. It is also used in combination with chemical fiber in the manufacture of catalog paper, construction paper, and other so-called groundwood papers. The choice between mechanical pulp and chemical pulp (such as kraft pulp, in which heat and chemicals are used to solubilize the adhesive found in wood and reduce the wood to papermaking fiber) partly depends on the properties of the fiber. Cost is another factor: the total operating cost for mechanical pulp is in the order of $80 to $90 per ton, while that for chemical pulp is about $150-$180 per ton.

---

*P.O. Karjalainen, J.E. Lofkrantz, and R.D. Christie, "Chloride Buildup in Kraft Liquor Systems," Pulp & Paper Magazine of Canada, Vol. 73, No. 12 (December 1972), p. 95.

**Information on TMP was obtained, in part, from discussions with representatives of Publishers Paper Co., Blandin Paper Co., E.D. Jones Division of Beloit Corp., Diamond National Corp., British Columbia Research Laboratories, and Bowaters Paper Co.

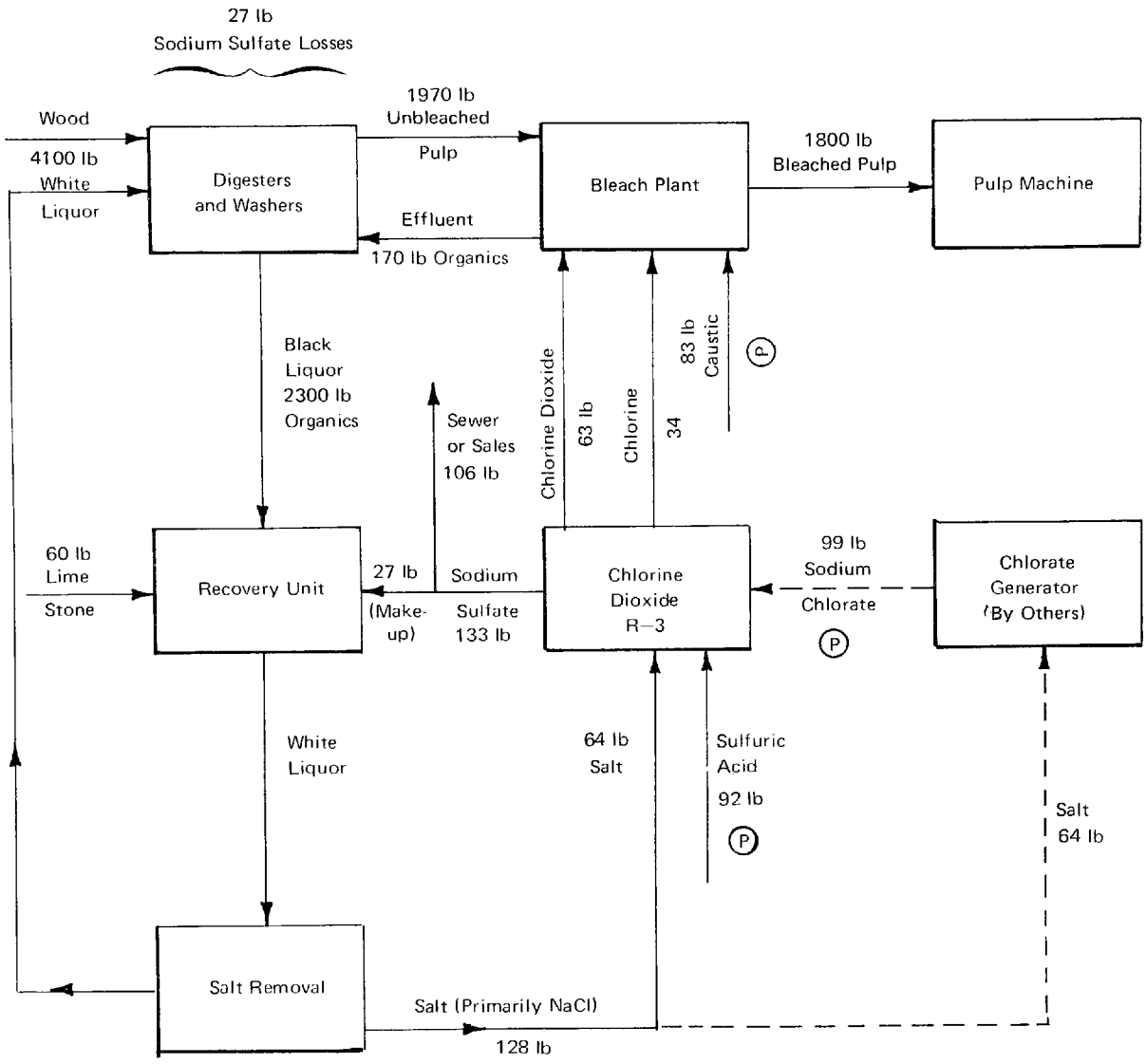

P = Purchased

Source: Arthur D. Little, Inc. estimates from Erco Envirotech data

Figure V-2. Rapson Effluent-Free Kraft Process Material Balance (Basis: 1.0 ADT to pulp dryer)

TABLE V-6

ENERGY REQUIREMENTS FOR RAPSON EFFLUENT-FREE KRAFT SLUSH PULP, BY MAJOR PROCESS STEP
(New mill basis)

	Steam[a]		Power[b]		Total Energy
	(lb/ADT)	(10^6 Btu/ADT)	(kWh/ADT)	(10^6 Btu/ADT)	(10^6 Btu/ADT)
Wood Preparation	-	-	105	0.4	0.4
Pulping	3,800	4.9	115	0.4	5.3
Bleaching	800	1.0	95	0.4	1.4
Chemical Recovery	4,300	5.6	170	0.7	6.3
Liquor Preparation	700	0.9	25	0.1	1.0
Salt Recovery	2,300	3.0	90	0.4	3.4
Water Treatment and Effluent Disposal	-	-	20	0.1	0.1
Shops, Stores, and Miscellaneous	500	0.7	15	0.1	0.8
Lime Reburning	-	-	-	-	1.4
Total Energy Usage for Slush Pulp	12,400	16.1	635	2.6	20.1

Recovered Heat[c]

Spent liquor (incl. bleach plant): 13,000 lb steam/ADT = 17.0×10^6 Btu
Bark and hogged fuel: 800 lb steam/ADT = 17.0×10^6 Btu

[a]Process steam estimated at 1100 Btu/lb net (steam heat content less condensate credit)
[b]and 85% boiler efficiency = 1300 Btu fuel/lb steam
[c]Extracted power estimated at 4000 Btu fuel/kWh
Recovered heat based on steam @ 1300 Btu fuel equivalent/lb. This represents a recovery boiler heat efficiency of 75%.

Source: Arthur D. Little, Inc., estimates from Erco Envirotech data

TABLE V-7

SUMMARY - CONSUMPTION AND POLLUTION LOADS FOR RAPSON EFFLUENT-FREE SLUSH PULP PRODUCTION, BY PROCESS STEP
(New mill basis)

	Wood Preparation	Pulping	Bleaching	Chemical Recovery and Liquor Preparation	Salt Recovery	Miscellaneous and Auxiliaries	Effluent Treatment	Total
Energy Consumption, (10^6 Btu)								
Lime Reburning	-	-	-	-	-	-	-	1.4
Steam	-	4.9	1.0	6.5	3.0	0.7	-	16.1
Power	0.4	0.4	0.4	0.8	0.4	0.1	0.1	2.6
Total Energy	0.4	5.3	1.4	7.3	3.4	0.8	0.1	20.1
Recovered Energy	(1.0)	-	-	(17.0)	-	-	-	18.0
Net Purchased Energy	(0.6)	5.3	1.4	(9.7)	3.4	0.8	0.1	2.1
Water Effluent Loads[a]								
Total Flow (000 gals/ton)								20
TSS (lb/ton)								None
BOD_5 (lb/ton)								None
Color								None
Excess Saltcake, (lb/ton)								133
Air Emissions								
Particulates (lb/ton)		0		200				200
TRS (lb/ton)		9		15				24

[a] Aqueous effluent is "clean water" only; i.e., distilled water from white liquor evaporators (salt removal), and cooling water from evaporators, boilers, turbines, and chemical production. Excess saltcake discharged or sold.

Source: Arthur D. Little, Inc., estimates from Erco Envirotech data

TABLE V-8

RAPSON EFFLUENT-FREE KRAFT PROCESS INVESTMENT AND PRODUCTION COSTS

Product: Slush Pulp
Byproducts: Turpentine
Annual/Design Capacity: 296,000 ADT
Annual Production: 276,000 ADT

Process: Rapson Effluent-Free Kraft, Continuous
Fixed Investment:[a] $135 x 10^6
Working Capital: $10 x 10^6
Stream Days/Yr.: 345

Location: Southeast
Depreciation Period (yr): 16
Year Used for Costing Purposes: 1975

A. MANUFACTURING COSTS	Units Used in Costing or Annual Cost Basis	$/Unit	Units Consumed per Ton of Product	$/ADT of Product
VARIABLE COSTS				
Raw Materials				
• Pulpwood	Cunits	34	1.50	51.0
• Chemicals				30.0
Byproduct Credits				
• Turpentine				(2.0)
Energy				
• Purchased Fuel	10^6 Btu	1.90	2.1	4.0
• Electric Power Purch.				
Energy Credits (Specify form)				
• Electric Power	kWh	0.018	none	
Water[b]				
• Process (Consumption)	10^3 gal	-	20	-
• Cooling				
Direct. Operating & Supv. Wages	Man-hr	6.1	0.8	5.0
Maintenance Labor & Supv. Wages	Man-hr	7.0	0.7	5.0
Maintenance Materials & Supp.				5.0
Labor Overhead	@ 32% Direct & Maintenance Wages			3.0
Misc. Variable Costs/Credits				
• Operating Supplies				1.0
FIXED COSTS				
Plant Overhead	@ 50% Direct & Maintenance Wages			5.0
Local Taxes & Ins.	@ 2% Fixed Capital			10.0
Depreciation	@ 6-1/4% Fixed Capital			31.0
TOTAL PRODUCTION COSTS				148.0
Return on Investment (pretax) (incl. working captial)	@ 20% Total (Fixed & Working) Capital			105.0
POLLUTION CONTROL				5.0
TOTAL				259.0

[a]Based on manufacturing process only.

[b]The costs of supplying and treating process and cooling water are included in the details of investment and operating costs; i.e., these costs include pumps, filters, power, labor, etc., for water supply but not effluent treatment.

TABLE V-8

RAPSON EFFLUENT-FREE KRAFT PROCESS - INVESTMENT AND PRODUCTION COSTS (Cont.)

B. Derivation of Fixed Capital Costs and Pollution Control Operating Costs

FIXED CAPITAL COSTS:	$ million
• Direct Manufacturing	
Manufacturing Process (incl. $0.5 million royalty)	130.0
OSHA	1.5
Air Control[c]	2.6
Water Control[c]	2.0
	135.0
• Pollution Control	
Water - Internal	2.0
Water - External	0.0
Air	3.0
	5.0

POLLUTION CONTROL OPERATING COSTS:	$/ADT
Operation and Maintenance	1.0
Depreciation @ 6-1/4%	1.0
Pretax R.O.I. @ 20%	4.0
	6.0

[c]The amount that is economically justified, in that the value of the recovered product offsets the investment and operating cost of the installed equipment.

U.S EPA Headquarters Library
Mail code 3404T
1200 Pennsylvania Avenue NW
Washington, DC 20460
202-566-0556

TABLE V-9

COMPARISON OF RAPSON EFFLUENT-FREE PROCESS WITH STANDARD KRAFT SLUSH PULP
(New mill basis)

Item	Rapson Process	Standard Kraft
Plant Investment, Pollution Control ($million)	140	154
Operating Cost ($/ADT) incl. Pollution Control	259	290
Purchased Energy (10^6 Btu/ADT)	2.1	7.4
Pollution Loads		
Water Volume (10^3 gal/ton)	20[a]	31
BOD (lb/ton)	none	66
TSS (lb/ton)	none	66
Color (lb/ton)	none	300
Air Emissions		
Particulates (lb/ton)	200	200
TRS (lb/ton)	24	24

[a]Aqueous effluent is "clean water" only; see Table V-7

In the oldest process, stone groundwood, whole logs (generally four feet long and almost entirely of the softwood species) are held under pressure aganist a grinding stone. The wood is reduced to individual papermaking fibers by the tearing action of the rotating grindstone. Wood chips, sawdust, and shavings from sawmills or plywood mills can be used as raw materials for the RMP and TMP mechanical pulping techniques; when sawdust is used, however, it is normally blended with mechanical pulp made from chips.

In the TMP process, the wood particles are preheated to 130°C for a short period and then reduced to fibers in a pressurized disc refiner which consists of two circular metal plates generally rotating in opposite directions. In the RMP process, the size reduction of the wood particles to fiber is carried out at atmospheric conditions.

2. Advantages

The incentive to switch from stone grinding to RMP and then more recently to TMP has been the improved fiber properties and an expansion of the wood source base -- i.e., the ability to use chips and residual wood. These newer methods of preparing mechanical pulp therefore help to dispose of solid waste that has historically created a major problem in lumber manufacture.

The strength properties of RMP product are superior to those of stone ground, and those of TMP are dramatically superior to those of RMP. The strength improvement is associated with the ability of TMP pulp to develop bonding strength through "beating" (i.e., subsequent mechanical treatment), much the way chemical pulps do. Stone and RMP pulps lack this characteristic. Because of the superior strength properties, the TMP process has gained rapid acceptance in the industry. Over 40 commercial installations of TMP are in various stages of construction in the United States and Canada.

The pulp yield from all three mechanical processes is about the same -- 96-97%. Modern mills recycle and recover screening rejects; therefore, the yield losses are largely attributable to organic materials that are dissolved during the pulping process.

In the stone and RMP processes, these losses would be about 3% to 3-1/2% (i.e., a yield of 96.5% to 97%); in the TMP process these losses would be about 1% higher (i.e., a yield of 95.5% to 96%). The difference can be attributed to the elevated temperature used in the TMP process, which causes slightly more organic material to dissolve and eventually appear in the water effluent as additional BOD loading.

Because of the higher temperatures used in the TMP process versus stone or RMP, there has been considerable discussion of the possibility of greater toxicity of the water effluent from this newer process. Studies by the British Columbia Research Corporation indicate that there is no great difference in the toxic characteristics of the effluent stream. The only significant dissimilarity between TMP and the current processes is its additional BOD loading, which has been reported by one mill with considerable experience to be about 20% higher (i.e., 48 lb BOD/ton for TMP versus about 41 lb for RMP). Using the widely accepted oxygen transfer efficiency factor of 2 pounds of oxygen per horsepower hour, and the relationship that 1 pound of oxygen is required to reduce 1 pound of BOD, we can calculate that the additional 7 lb/ton BOD load from TMP corresponds to about 3 kWh/ton, or roughly 1/1000 of the energy requirement for the entire pulping operation.

Energy consumption in the preparation of mechanical fiber varies significantly with the type of wood. With stone groundwood pulping, the northern species such as spruce, balsam fir, and jack pine require about 1100 kWh/ton to make usable fiber, while the coarse southern pine species require about 1500 kWh/ton. These figures are, of course, approximations and are based upon mechanical pulp for newsprint. In practice, energy consumption varies widely, depending upon the "level of freeness," a measure of the degree of size reduction achieved. With the RMP process, the energy consumption is generally

20% higher for the northern softwood species and is so high for the southern species that the process is seldom used. Commercial experience with TMP indicates that its energy consumption on the northern softwood species is about the same as that for RMP, i.e., about 1300 kWh/ton; on southern pine it is about the same as stone groundwood, i.e., about 1500 kWh/ton.

Although steam is generally used to heat the wood particles in the TMP process and not in the other two mechanical pulping processes, there is no net increase in energy requirements for TMP compared with RMP, because the requisite heat generated in the first (pressured) step of the TMP process is used for this purpose. Accordingly, the only net increase in energy requirement associated with TMP compared with the other mechanical processes is the 3 kWh/ton required to reduce the additional 20% BOD load normally accompanying the new process.

3. Energy Consumption and Pollution Load

Figure V-3, a schematic material and energy balance for the alternative mechanical pulping processes, and Table V-10 summarize the respective energy and pollution characteristics. The energy requirements shown in this summary differ somewhat from the previously reported estimates because (a) a different wood species is considered -- namely, Pacific Northwest softwood -- and (b) the total power requirement reported includes auxiliary operations to the actual mechanical pulping, such as chip conveying, washing, and pulp cleaning.

Tables V-11* and V-12 indicate the process economics for manufacturing mechanical pulp via the RMP and TMP processes respectively. We have not considered stone groundwood, since it is highly unlikely that a new grassroots mill would use this method. (Existing mills with stone groundwood facilities might, however, elect to expand incrementally in this manner.) Note that the investment and operating costs, which refer here to slush pulp, are about the same for TMP and RMP. Slush pulp is an interim product used in the papermaking operation.

The real economic incentive for using TMP is the superior strength of the pulp compared with other types of mechanical pulps. This is indicated in Table V-13, which compares the economic, energy, and pollution characteristics of newsprint slush pulp furnish from both RMP and TMP. Refiner pulp would normally comprise about 80% of the furnish, with 20% semi-bleached kraft added for strength. However, initial results indicate that as much as 95% TMP may be used for newsprint, with only 5% kraft required. Thus, the real value of TMP is not in a direct comparison with RMP but in the ability of TMP to reduce significantly the chemical fiber requirements (kraft or sulfite) in groundwood paper furnishes.

---

*Two costs for purchased electric power have been used in this study -- $0.018/kWh and $0.006/kWh. The latter is a weighted average cost used when power is normally obtained from plant-owned hydroelectric facilities, which is often the case with mechanical pulp mills.

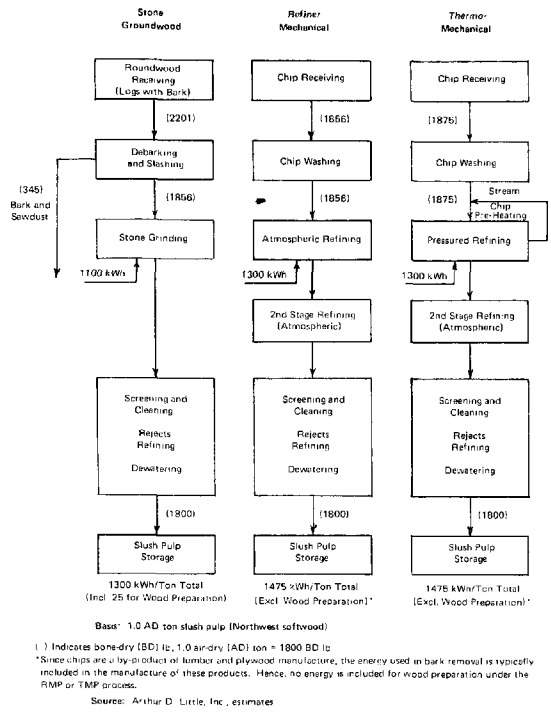

Figure V-3. Schematic Flow Diagram of Alternative Mechanical Pulping Techniques

TABLE V-10

ENERGY REQUIREMENTS AND POLLUTION LOADS FOR SLUSH PULP FROM MECHANICAL PROCESSES
(New mill basis)

Item	Stone Groundwood	RMP	TMP
Energy per ADT:			
Purchased fuel (10^6 Btu)	0.3	0.3	0.3
Purchased power (kWh)	1300	1475	1475
(10^6 Btu[a])	13.0	14.8	14.8
Total Purchased Energy (10^6 Btu/ADT)	13.3	15.1	15.1
Water Effluent Loads per ADT:			
Total Flow (10^3 gal)	3.0	3.0	3.0
BOD_5 (lb)	38	41	48
TSS (lb)	36	90	90
Air Emissions	0	0	0

[a]Based on 10^4 Btu/kWh for purchased power--i.e., approximate 30% efficiency of power generating plant in converting a Btu from fuel to a kWh of electricity.

Source: Arthur D. Little, Inc. estimates

TABLE V-11

RMP SLUSH PULP INVESTMENT AND PRODUCTION COSTS

Product: Slush Pulp
Byproducts: None
Annual/Design Capacity: 290,000 ADT
Annual Production: 280,000 ADT

Process: RMP,Continuous
Fixed Investment[a]: $40 x 10^6
Working Capital: $5 x 10^6
Stream Days/Yr.: 345

Location: Northwest
Depreciation Period (yr): 16
Year Used for Costing Purposes: 1975

A. MANUFACTURING COSTS	Units Used in Costing or Annual Cost Basis	$/Unit	Units Consumed per Ton of Product	$/ADT of Product
VARIABLE COSTS				
Raw Materials				
• Pulpwood	Cunits	40	0.81	32.8
• Chemicals				2.0
Byproduct Credits			0	
Energy				
• Purchased Fuel	10^6 Btu	1.85	0.3	1.0
• Electric Power Purch.	kWh	0.006	1475	9.0
Energy Credits			0	
Water[b]				
• Process				
• Cooling				
Direct. Operating & Supv. Wages	Man-hr	6.8	0.4	3.0
Maintenance Labor & Supv. Wages		7.8	0.4	3.0
Maintenance Materials & Supp.				3.0
Labor Overhead	@ 32% Direct & Maintenance Wages			2.0
Misc. Variable Costs/Credits				
• Operating Supplies				1.0
FIXED COSTS				
Plant Overhead	@ 66% Direct & Maintenance Wages			4.0
Local Taxes & Ins.	@ 2% Fixed Capital			3.0
Depreciation	@ 6-1/4% Fixed Capital			9.0
TOTAL PRODUCTION COSTS				72.0
Return on Investment (pretax) (incl. working capital)	@ 20% Total (Fixed & Working) Capital			32.0
POLLUTION CONTROL				3.0
TOTAL				107.0

[a]Based on manufacturing process only.

[b]The costs of supplying and treating process and cooling water are included in the details of investment and operating costs; i.e., these costs include pumps, filters, power, labor, etc., for water supply but not effluent treatment.

TABLE V-11

RMP SLUSH PULP INVESTMENT AND PRODUCTION COSTS (Cont.)

B. Derivation of Fixed Capital Costs and Pollution Control Operating Costs

FIXED CAPITAL COSTS:	$ million
• Direct Manufacturing	
Manufacturing Process	40.0
OSHA	0.2
Water Control[c]	0.2
	40.0
• Pollution Control	
Water - Internal	0.2
Water - External	1.8
No color removal or air control	-
	2.0

POLLUTION CONTROL OPERATING COSTS:	$/ADT
Operation and Maintenance	1.2
Depreciation @ 6-1/4%	0.4
Pretax R.O.I. @ 20%	1.4
	3.0

[c]The amount that is economically justified, in that the value of the recovered product offsets the investment and operating cost of the installed equipment.

TABLE V-12

TMP SLUSH PULP INVESTMENT AND PRODUCTION COSTS

Product: Slush Pulp
Byproducts: None
Annual/Design Capacity: 362,000 ADT
Annual Production: 350,000 ADT [a]

Process: TMP, Continuous
Fixed Investment[b]: $55 x 10^6
Working Capital: $7 x 10^6
Stream Days/Yr.: 345

Location: Northwest
Depreciation Period (yr): 16
Year Used for Costing Purposes: 1975

A. MANUFACTURING COSTS	Units Used in Costing or Annual Cost Basis	$/Unit	Units Consumed per Ton of Product	$/ADT of Product
VARIABLE COSTS				
Raw Materials				
• Pulpwood	Cunit	40	0.82	33.0
• Chemicals				2.0
Byproduct Credits			0	
Energy				
• Purchased Fuel	10^6 Btu	1.85	0.3	1.0
• Electric Power Purch.	kWh	0.006	1475	9.0
Energy Credits			0	
Water[c]			0	
Direct. Operating & Supv. Wages	Man-hr	6.8	0.4	3.0
Maintenance Labor & Supv. Wages	Man-hr	7.8	0.4	3.0
Maintenance Materials & Supp.				3.0
Labor Overhead	@ 32% Direct & Maintenance Wages			2.0
Misc. Variable Costs/Credits				
• Operating Supplies				2.0
FIXED COSTS				
Plant Overhead	@ 66% Direct & Maintenance Wages			4.0
Local Taxes & Ins.	@ 2% Fixed Capital			3.0
Depreciation	@ 6-1/4% Fixed Capital			10.0
TOTAL PRODUCTION COSTS				75.0
Return on Investment (pretax) (incl. working capital)	@ 20% Total (Fixed & Working) Capital			35.0
POLLUTION CONTROL				2.0
TOTAL				112.0

[a]Because a proportionately greater amount of TMP than RMP can be used in the fiber furnish, production of TMP is greater for a given amount of product.

[b]Based on manufacturing process only.

[c]The costs of supplying and treating process and cooling water are included in the details of investment and operating costs; i.e., these costs include pumps, filters, power, labor, etc., for water supply but not effluent treatment.

TABLE V-12

TMP SLUSH PULP INVESTMENT AND PRODUCTION COSTS (Cont.)

B. Derivation of Fixed Capital Costs and Pollution Control Operating Costs

FIXED CAPITAL COSTS:	$ million
• Direct Manufacturing	
Manufacturing Process	55.0
OSHA	0.2
Water Control[c]	0.2
	55.0
• Pollution Control	
Water - Internal	0.2
Water - External	1.3
No color removal or air control	-
	2.0

POLLUTION CONTROL OPERATING COSTS:	$/ADT
Operation and Maintenance	1.0
Depreciation @ 6-1/4%	0.1
Pretax R.O.I @ 20%	1.0
	2.0

[c]The amount that is economically justified, in that the value of the recovered product offsets the investment and operating cost of the installed equipment.

TABLE V-13

COMPARISON OF NEWSPRINT SLUSH PULP FURNISH FROM RMP AND TMP
(New mill basis - 1000 tpd newsprint)

Item	80% RMP 20% Kraft	95% TMP 5% Kraft
Plant Investment ($ million)		
Mechanical	42	57
Kraft	39	10
Total	81	67
Operating Cost ($/ADT)		
Mechanical	86	106
Kraft	58	15
Total	144	121
Purchased Energy (10^6 Btu/ADT)	13.5	14.7
Pollution Loads		
Water Volume (10^3 gal/ton)	8.6	4.4
BOD (lb/ton)	46	49
TSS (lb/ton)	85	89
Color (lb/ton)	60	15
Air Emissions		
Particulates (lb/ton)	40	10
TRS (lb/ton)	5	1

NOTE: The furnish costs for RMP and TMP are based on the costs previously presented for standard bleached kraft pulp. Actual kraft pulp costs in the Northwest would be significantly higher (perhaps 20% or more) because of higher labor costs.

There is considerable industry interest in the possibility of using chemicals in the pretreatment stage to improve the strength properties and reduce the energy requirement of TMP.* This chemi-thermo-mechanical pulping (CTMP) is a variation of the current commercial practice (now used by Appleton Paper Co. and Diamond International) of combining chemical pretreatment with RMP; the latter involves soaking the wood chips in a dilute solution (about 1% caustic and 1/2% sodium sulfite) for 1/2 to 1 hour at atmospheric conditions before they enter the refining operation. Precise data are not available on the energy usage, pollution, and product characteristics of this process; however, pulp yield is reported to be somewhat lower (85 - 92%) and the resultant fiber stronger than with the conventional process.

Pulp yields for chemi-mechanical are lower than with conventional mechanical pulp, and we deduced from discussions at Blandin Paper Co. that the additional losses, principally organic materials, appear in the water effluent stream as greater amounts of BOD and suspended solids. If improved strength characteristics are attained with the addition of chemicals to the RMP process, the same is likely to happen with the TMP process.

Blandin Paper Company of Grand Rapids, Minnesota, reports the only known commercial installation of chemi-thermo-mechanical pulping. The company's principal reason for using it is to enable the mill to pulp hardwood (Aspen) species. Typically, only softwood species are used in mechanical pulping, but Blandin indicates that the strength characteristics of the CTMP from Aspen are

*Information on this subject is based on discussions with representatives of Blandin Paper Co., Diamond National, and Appleton Paper Co.

equivalent to those of softwood pulped with the conventional RMP process. Data on the mill's energy usage are not available, but we would guess that it requires perhaps 10 - 20% less energy than the TMP process.

One drawback to chemical pretreatment is the potential for increased water pollution. The chemicals increase the amount of lignin that is extracted from the wood, and although the percentage is still only 5 - 10%, it is much larger than with TMP alone; as a result, BOD loading could conceivably double. In contrast to chemical pulping, however, the amount of chemicals and organic material in the spent liquor is not enough to make recovery of heat and chemicals economically attractive.

Considering the experience required to advance a project from the laboratory stage, we doubt that chemical addition will be reduced to commercial practice within the next 2 to 3 years. Nevertheless, this area of activity appears to warrant EPA assessment, since it could have significant future effects on both energy usage and pollution control.

As stated previously, one of the major applications for mechanical pulps is newsprint. The TMP process may be used to process lower-value residue woods such as sawdust and shavings, producing a pulp with properties equivalent to those of stone groundwood; alternatively, it can be used to process high-quality chips to make a superior pulp. In the latter case, it might be possible to reduce or eliminate entirely the 20 - 30% of long-fiber chemical pulp needed with stone groundwood. The unit consumption of purchased energy would be increased only slightly if TMP were used for low-value residue woods but significantly if 100% TMP pulp were used. We believe that the trend will be toward the former rather than toward the production of "single-fiber-furnish" newsprint. Therefore, the impact on energy consumption of the expected acceptance of the TMP process will be small.

D. DEINKING OF OLD NEWS FOR NEWSPRINT MANUFACTURE*

1. Background

The deinking of old news for newsprint manufacture is a well-established commercial practice. Currently, four U.S. mills make newsprint entirely from deinked news. Three of these are operated by Garden State Paper Company and have a combined capacity in excess of 400,000 tpy. The fourth, which was recently built by New England Pulp and Paper Mill of Lincoln, New Hampshire, has a 50,000-tpy capacity.

Although the concept of blending recycled fiber with virgin mechanical fiber is not new, it has only recently been introduced for the manufacture of newsprint on a large scale. Previously, Manistique Paper Company was combining these fibers to make newsprint, but only on a modest scale and along with other groundwood papers produced at the plant site. More recently, Southwest Paper Company in Snowflake, Arizona, started a 100,000-tpy newsprint

*Information on deinking was obtained, in part, from discussions with representatives of Publishers Paper Co., Garden State Paper Co., and Manistique Paper Co.

operation using about 50/50 virgin groundwood and deinked pulp. Publishers Paper Company at Oregon City, Oregon, has started a 10,000-tpy deinking operation and announced plans to increase its capacity to 100 tons per day for blending with its mechanical and chemical pulps for the manufacture of newsprint. Garden State has also announced plans to build a new mill in the Southeast using a blend of thermo-mechanical pulp and deinked news to produce about 150,000 tpy of newsprint.

Accordingly, the partial or full substitution of deinked pulp for both mechanical and chemical fibers in newsprint manufacture is not a new development. It was chosen for in-depth technical/economic analysis because the production of newsprint containing deinked news now accounts for less than 5% of the total newsprint consumed in the United States, and its broader application could significantly reduce both energy usage and pollution. It would be an ideal option for EPA and other federal agencies to encourage.

2. Process Description

Two methods can be used to separate ink from fibers--flotation and washing. Few deinking installations in the United States use flotation techniques, and none of these are involved in the large-scale production of recycled newsprint. Accordingly, our discussion will concern washing, which is used in all the large-scale deinking operations, including those planned to be built or scheduled for expansion.

Pulping, the first process step, can be either batch or continuous. Each has its advantages:

- Batch pulping enables an operator to segregate a quantity of old news containing an abnormal amount of poor-quality material and either gradually feed it into the system or dispose of it entirely.

- Continuous pulping improves the utilization of the equipment; hence, it reduces the initial investment per daily ton. It is also likely to provide a more uniform feed to the next process step.

The deinking chemicals (typically sodium peroxide, sodium silicate, and a detergent) are added during the pulping operation and are largely recoverable. The precise composition of the deinking chemicals is generally proprietary. Garden State, which licenses its technology, provides its proprietary deinking chemicals to licensees.

Heat is needed to help disperse the old news in the pulping operation; it is generally provided via recirculated "white water" which has been treated in its previous application.

Washing -- i.e., the actual separation of the ink particles from the papermaking fibers -- can be carried out either in a cylinder washer ("decker") or on "side hill" screens. The stock is then often passed through a thickener to increase its consistency from about 2 - 3% to 12 - 14%. This

is done to: (a) recover the liquor removed from the pulp slurry and (b) concentrate the fibers in the aqueous slurry so that the subsequent operation is more efficient.* A screw extractor is generally used for this purpose.

In Garden State's operations, which currently produce 400,000 tpy, the resultant deinked fiber then goes to the papermaking operation, where it is treated much like conventional virgin fiber.

Figure V-4 shows a material and energy balance and effluent characteristics for a typical deinking operation. As in previous examples, the unit energy requirements and effluent loads are for a new mill installation; the values can be as much as 50 to 100% greater for an existing mill.

3. Comparison of Current and Alternative Technology

Table V-14 summarizes the costs, energy, and pollution characteristics of alternative pulping processes for the manufacture of a newsprint fiber furnish. Clearly, the purchased energy requirements for deinked pulp are substantially less than those for either of the virgin pulp compositions.

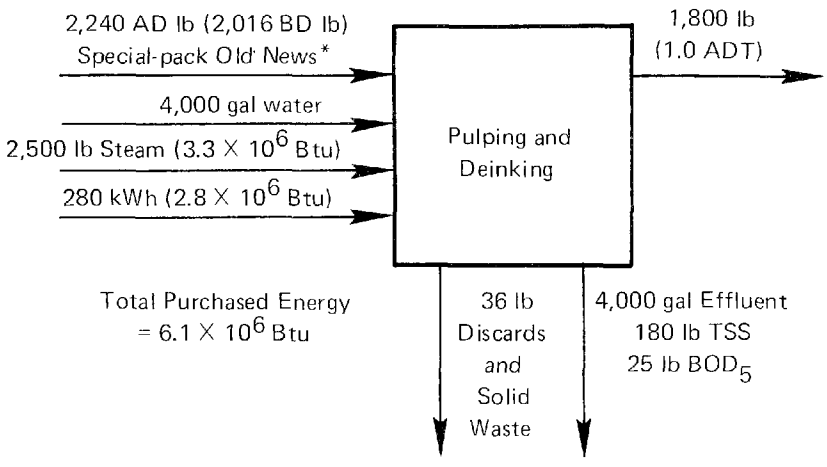

Basis: 1.0 ADT (1,800 BD lb) Slush Pulp

*Since some old news is purchased wet, average moisture content is 10%.

Figure V-4. Raw Material and Energy Requirements and Pollution For Deinked Newsprint Furnish (New Mill Basis)

---

*A.M. Altieri and J.W. Wendell, "Deinking of Waste Paper," TAPPI Monograph 31, 1967

TABLE V-14

COMPARISON OF NEWSPRINT SLUSH PULP FURNISH FROM DEINKING, RMP, AND TMP (New mill basis)

Item	Deinked (330 tpd)	80% RMP 20% Kraft (1000 tpd)	95% TMP 5% Kraft (1000 tpd)
Plant Investment ($million)	24	81	67
Operating Cost ($/ADT) - Mechanical	159	86	106
Kraft		58	15
Total	159	144	121
Purchased Energy (10^6 Btu/ADT)	6.1	13.5	14.7
Purchased Energy Cost ($/ADT)	8.0	10.2	10.1
Pollution Loads			
Water Volume (10^3 gal/ADT)	4	8.6	4.4
BOD (lb/ADT)	25	46	49
TSS (lb/ADT)	180	85	89
Color (lb/ADT)	170	60	15
Air Emissions			
Particulates (lb/ton)	0	40	10
TRS (lb/ton)	0	5	1

While the raw waste load of suspended solids (TSS) is significantly greater for deinked pulp than for the virgin pulps, Garden State management reports no major problem in complying with water effluent control regulations.* In fact, in one of their existing operations, the TSS has been reduced to about 45 lb/ton. The difference between this and the 180 pounds per ton listed in Table V-14 appears as a solid waste. Accordingly, the greater use of deinked old news in the manufacture of newsprint would not adversely affect the water effluent control problem and would substantially alleviate the problem of disposing of old news (although it might initially create a secondary solid waste).

The process economics for the alternative processes show substantially lower costs for the conventional pulping combinations, but the comparison is somewhat misleading because of the low power cost used ($0.006 per kWh). This rate is reasonable for a plant site in the Pacific Northwest, but it would be considerably higher in the Northeast and South. Since conventional mechanical pulping processes require more energy than does deinking, higher energy costs would affect them more than deinking.

*Frank Lorey, Vice President, Garden State Paper Co.

In general, the operating cost and profitability of newsprint manufacture from deinked pulp and virgin pulp are about the same. The constraint in broader application of deinking old news for newsprint manufacture is the number of metropolitan locations with a sufficiently large population to generate the volume of old news needed to support a recycling operation. In related work we have done in this area, we estimated that about five additional sites might be available.*

Table V-15 shows supporting data for the process economics of deinking. The process economics for the combination of RMP and TMP were presented previously in Section V-C.

---

*ADL report to EPA, "Analysis of the Demand and Supply for Secondary Fiber in the U.S. Pulp and Paperboard Industry," 1975. The present sites (all Garden State Paper Co. plants) are Pomona, California; Alslip, Illinois; and Garfield, New Jersey.

TABLE V-15

DEINKED NEWS INVESTMENT AND PRODUCTION COSTS

Product: Newsprint slush pulp furnish Process: Wastepaper Deinking, Continuous Location: West Coast

Byproducts: None

Annual/Design Capacity: 118,000 ADT

Annual Production: 112,000 ADT

Fixed Investment[a]: $22 x 10^6

Working Capital: $3 x 10^6

Stream Days/Yr.: 340

Depreciation Period (yr): 16

Year Used for Costing Purposes: 1975

A. MANUFACTURING COSTS	Units Used in Costing or Annual Cost Basis	$/Unit	Units Consumed per Ton of Product	$/ADT of Product
VARIABLE COSTS				
Raw Materials				
• Old News	ton	43.0	1.12	48.0
• Chemicals		various		11.0
Byproduct Credits			0	
Energy				
• Purchased Fuel	10^6 Btu	1.85	3.3	6.0
• Electric Power Purch.	kWh	0.006	280	2.0
Energy Credits				
Water[b]				
• Process (Consumption)	10^3 gal	-	4.0	-
• Cooling				
Direct. Operating & Supv. Wages	Man-hr	6.8	0.6	4.0
Maintenance Labor & Supv. Wages	Man-hr	7.8	0.3	2.0
Maintenance Materials & Supp.				2.0
Labor Overhead	@ 32% Direct & Maintenance Wages			2.0
Misc. Variable Costs/Credits				
• Operating Supplies				1.0
FIXED COSTS				
Plant Overhead	@ 66% Direct & Maintenance Wages			4.0
Local Taxes & Ins.	@ 2% Fixed Capital			4.0
Depreciation	@ 6-1/4% Fixed Capital			13.0
TOTAL PRODUCTION COSTS				103.0
Return on Investment (pretax) (incl. working capital)	@ 20% Total (Fixed & Working) Capital			45.0
POLLUTION CONTROL				11.0
TOTAL				159.0

[a]Based on manufacturing process only.

[b]The cost of supplying and treating process water is included in the details of investment and operating costs; i.e., these costs include pumps, filters, power, labor, etc., for water supply, but not effluent treatment.

TABLE V-15

DEINKED NEWS INVESTMENT AND PRODUCTION COSTS (Cont.)

B. Derivation of Fixed Capital Costs and Pollution Control Operating Costs

FIXED CAPITAL COSTS:

	$ million
• Direct Manufacturing	
Manufacturing Process	21.0
OSHA	0.5
Water Control[c]	0.2
	$22.0
• Pollution Control	
Water - Internal	0.2
Water - External	2.0
No air or color removal	-
	2.0

POLLUTION CONTROL OPERATING COST:	$/ADT
Operation and Maintenance	6.0
Depreciation @ 6-1/4%	1.1
Pretax R.O.I. @ 20%	3.0
	11.0

[c]The amount that is economically justified, in that the value of the recovered product offsets the investment and operating cost of the installed equipment.

APPENDIX A

SUPPLY/DEMAND BY PRODUCT SECTOR

This appendix presents information on supply and demand for each of the principal product sectors in the pulp and paper industry. It also describes the structure of the industry in each sector. As such, it augments the material given in Chapter III describing the products made in each sector and the factors that affect energy use and pollution control.

For ease of reference, the page number on which each subsection begins is listed below.

Market Pulp	120
Containerboard	125
Folding Boxboard	130
Newsprint and Uncoating Groundwood Paper	131
Printing, Writing and Related Papers	137
Tissue and Related Papers	141
Industrial Packaging and Converting Papers	145
Construction Paper and Paperboard	148

1. MARKET PULP

a. Demand

U.S. consumption of dissolving pulp grew at an apparent average rate of 1% per year between 1960 and 1973. However, examination of the trend shows that U.S. consumption peaked in 1968 and by 1973 had declined by a total of 13%. World demand appears to have peaked in 1970 but is declining at a slower rate than U.S. demand. Thus, dissolving pulp represents a product that appears to have reached full maturity and is now declining.

The total U.S. consumption of bleached market pulp has grown at a very steady rate of nearly 6% per year since 1960 with only a slight reduction in the growth rate during the five years prior to 1973. There has been a modest tapering of the growth rate in printing and fine paper and a more pronounced slowdown in tissue paper, but this has been offset by the extremely rapid growth in fluffing pulp, which is used for disposable diapers and bed pads. This historic growth trend makes bleached pulp one of the fastest growing areas in the pulp and paper industry. In 1973, bleached market pulp amounted to 21% of the total bleached pulp consumed in the United States.

While total demand for bleached market pulp has grown at a fairly steady rate, there has been a dramatic shift in consumption from sulfite to kraft grades. Between 1960 and 1973, consumption of bleached sulfite pulp dropped 50% while that of the bleached and semi-bleached kraft grades tripled. This was mainly caused by the fact that bleached sulfite pulp capacity has remained static and increasing amounts have been diverted to captive use. Thus the shift does not represent an overwhelming preference for kraft pulp. The softwood grade of kraft pulp does offer superior strength properties in comparison with softwood sulfite; however, sulfite has superior softness and somewhat better opacity and thus is desirable in many tissue paper and some writing paper applications.

Table A-1 shows our estimates of the consumption of bleached market pulp by end use in 1973. It indicates the importance of the printing-writing paper and tissue paper markets, which together constitute about 80% of the demand for this product. The tight supply of bleached pulp which occurred in 1973 and 1974 caused difficulties for many of the small and nonintegrated printing-writing paper and tissue paper mills; some had to curtail production because of a lack of sufficient pulp. This shortage has now been overcome, but it may reverse if new capacity is not built to meet future needs.

TABLE A-1

U.S. BLEACHED MARKET PULP END USES, 1973

	Consumption	
Application	thousands of tons	Percent of Total
Printing-Writing Papers	2000	51
Tissue	1200	31
Other Paper Products	300	8
Fluffing Pulp	400	10
	3900	100

Source: Arthur D. Little, Inc. estimates

b. Supply and Industry Structure

Canadian imports currently account for 53% of U.S. consumption of bleached market paper pulps. However, they supply only about 12% of the dissolving pulp consumed in the United States. Most of the Canadian pulp mills specialize in market pulp rather than being integrated to on-site paper or paperboard production.

In 1970 and 1971, Canadian pulp producers operated at about 85% of capacity but were able to meet the needs of the U.S. market. In 1973 and 1974, however, the Canadians operated at near-full capacity, except during mill and railroad strikes, which retarded Canadian exports during 1973.

The U.S. domestic supply of bleached market pulp comes from two sources. One of these is the mills that specialize in producing market pulp, but most of these primarily produce dissolving pulp. A larger portion of the bleached market pulp supply comes from mills that are integrated to paper and paperboard. Often during an expansion program, the pulp mill is built larger than the paper or paperboard mill to take advantage of economies of scale; the company then sells market pulp until it expands its paper mill to equal the pulp mill capacity. Thus, there is a continual shifting in and out of the bleached paper pulp market as companies become more or less integrated to pulp.

The prospect of increasing the degree of forward integration at the plant site is not present with dissolving pulp, because this pulp is more economically converted into rayon closer to the market. All North American dissolving pulp mills are dedicated to this product or a combination of dissolving and bleached paper pulp. Two of these mills are partially owned by companies that produce rayon fiber; thus, while they are not integrated at the plant site, they are presently integrated forward in rayon manufacture. There may be more of this financial integration of pulp and rayon manufacture in the future.

Table A-2 shows the shares of North American capacity for dissolving pulp and bleached paper-grade pulp held by the major producers. It indicates that the dissolving pulp capacity is particularly highly concentrated. There is also a fair degree of concentration on the part of several bleached paper-grade pulp producers, namely, Weyerhaeuser, Parsons and Whittemore, ITT Rayonier, and Canadian Cellulose.

A number of factors have constrained pulp mill capacity expansion in the United States. These include: (1) price controls (until they were removed in mid-1974), (2) increasingly stringent and costly pollution control regulations, (3) a growing scarcity of suitable and available mill sites that have an adequate supply of wood and water, (4) concern over the future supply and costs of energy, (5) uncertainty over future operating cost inflation, and (6) the increasing capital investment required to expand or build new pulp mill capacity.

Vertical integration is important in this industry, mainly from the standpoint of backward integration to control a portion of the woodlands required to support the mill. This backward integration has also led companies to integrate horizontally into lumber and plywood production in an effort to obtain optimum fiber utilization and maximum return from land.

TABLE A-2

CONCENTRATION IN NORTH AMERICAN MARKET PULP SUPPLY
(Percent of North American capacity)

Company	Dissolving Pulp	Bleached Paper Pulp
ITT Rayonier	44%	6.8%
International Paper	14	4.2
Ketchikan Pulp	10	
Alaska Lumber and Pulp	9.5	
Procter & Gamble	9	
Subtotal	86.5%	
Other Producers (3)	13.5	
TOTAL	100.0%	
Weyerhaeuser		11.3
Parsons & Whittemore		7.0
Canadian Cellulose		6.7
B. C. Forest Products		5.7
MacMillan Bloedel		5.3
Georgia Pacific		4.3
Northwood Pulp & Timber		3.4
Tahsis Co.		3.2
Domtar		3.2
Cariboo Pulp & Paper		3.2
Subtoal		64.6%
Other Producers (10-15)		35.4
TOTAL		100.0%

Source: Arthur D. Little, Inc., estimates based on Lockwood's Directory, 1975.

As noted earlier, there is virtually no forward integration from the dissolving pulp mills, and relatively little from the bleached paper-grade pulp mills that specialize in this product area. It is important to be vertically integrated back to pulp in producing most paper and paperboard products, as noted elsewhere in this section, but it is not particularly advantageous to be integrated forward from pulp, particularly when pulp is in short supply as in 1973-1974.

c. Supply and Demand Trends

Table A-3 shows trends in U.S. capacity, production, imports, exports, and apparent consumption of bleached paper-grade pulps over the past five years. During this period, the capacity for bleached sulfite pulp declined and then grew modestly, while the rate of capacity expansion for bleached kraft pulp slowed appreciably to a 3.3% annual average between 1971 and 1974. In contrast, bleached pulps grew 5.7% per year between 1969 and 1971 and 7.9% per year during the previous ten years. The recent slower growth, coupled with a strong surge in U.S. and world consumption of bleached pulps in 1972 and 1973, created shortages in 1973 and the first half of 1974, even after the Canadian rail strike ended.

Market pulp current accounts for 32% of the total U.S. consumption of bleached paper-grade pulp; the remaining 68% is produced and consumed by paper and paperboard mills integrated to pulp.

TABLE A-3

U.S. CAPACITY, PRODUCTION, TRADE, AND CONSUMPTION OF BLEACHED PAPER-GRADE PULP, 1969-1974
(thousands of tons, except as noted)

	Capacity							
	Bleached Sulfite	Bleached Kraft[a]	Total	Production	Capacity Utilization (%)	Imports	Exports	Apparent Consumption[b]
1969	2,001	12,706	14,707	13,939	94.8	2,965	1,210	15,694
1970	1,968	13,538	15,506	14,983	96.6	2,611	1,926	15,668
1971	1,949	14,206	16,155	14,650	90.7	2,599	1,216	16,033
1972	1,949	14,744	16,693	15,766	94.1	2,796	1,376	17,186
1973	1,977	15,436	17,413	16,783	96.4	3,057	1,524	18,315
1974[c]	1,991	15,647	17,694	17,462	98.7	3,214	1,548	19,128

[a]Includes semi-bleached kraft pulp

[b]Production plus imports minus exports

[c]First-half annual rate

Source: Capacity - "Paper and Paperboard Wood Pulp Capacity," American Paper Institute (published annually).
Production - "Statistics of Paper and Paperboard," American Paper Institute (published annually)
Imports & Exports - "Quarterly Industrial Report: Pulp, Paper, and Board," U.S. Department of Commerce, Domestic and International Business Administration, Bureau of Domestic Commerce

There is a substantial amount of world trade in bleached papermaking pulps. Kraft pulp mills currently have about an 82% share of the world market for bleached paper-grade pulp. However, the rate of capacity expansion for bleached kraft pulp through 1978 will drop appreciably from past trends: the 1974 FAO* Capacity Survey indicated a growth rate of 4.6% per year for 1973-1978, in contrast to 10.4% per year for 1965-1972. The slowing growth of supply will be particularly critical for softwood pulp, where capacity will increase 24% in 1973-1978 compared with a 28% growth over the same period for hardwood kraft pulp.

Tables A-4 and A-5, which show world bleached kraft capacity growth by region, indicate that one of the principal reasons for the slowing trend is a comparatively slow rate of capacity expansion in the United States, which currently accounts for about 43% of the total world supply.

Because of the obstacles mentioned earlier to major pulp and paper mill capacity expansion, most of the new capacity plans will call for incremental additions to existing mills. As part of this incremental expansion, many pulp producers are integrating their pulp mills by adding paper machines. Thus, while paper and paperboard capacity is being expanded much slower than the historical trend, it is increasing faster than pulp capacity (Table A-6).

The chief conclusion we draw from these trends is that a relatively tight supply will be re-established with the recovery of the world economy that is expected in 1976 and will remain tight at least through 1978.

Table A-7 shows the major applications for bleached paper-grade pulp and our projections of each through 1980. This analysis points to an average annual growth in demand of 4% over the five-year period, compared with 6% per year in 1968-1973. Bleached kraft pulp will fill most of this increased demand, since sulfite pulp capacity will rise slowly, if at all. Thus, bleached kraft pulp demand should increase at an average of about 5% per year between 1975 and 1980.

Beyond 1978, an oversupply condition is likely to develop, possibly in 1979 and 1980, as producers respond to the recent rapid rise in pulp prices and profitability.

2. CONTAINERBOARD

a. Industry Structure

Containerboard is the largest single product category in the U.S. paper industry. Demand for the products in this group is directly related to the shipping container requirements of the full spectrum of American industry; thus, it is strongly influenced by the national economic activity.

---

*Food and Agriculture Organization of the United Nations

TABLE A-4

WORLD CAPACITY TRENDS FOR SOFTWOOD BLEACHED KRAFT PULP
(thousands of tons)

Country or Region	1973	1978	Increase Tonnage	Increase Percent
United States	7,448	8,376	928	12.5
Canada	5,352	6,068	716	13.4
Sweden	2,114	3,016	902	42.7
Finland	1,016	1,397	381	37.5
Other Western Europe	273	401	128	46.8
Japan	460	552	92	20.1
U.S.S.R.	408	862	454	111.1
Eastern Europe	100	346	246	246.4
Latin America	242	365	123	50.6
Other	197	386	189	95.9
TOTAL	17,610	21,769	4,159	23.6

Source: FAO Capacity Survey, 1974

TABLE A-5

WORLD CAPACITY TRENDS FOR HARDWOOD BLEACHED KRAFT PULP
(thousands of tons)

Country or Region	1973	1978	Increase Tonnage	Increase Percent
United States	5,441	5,718	277	5.1
Japan	2,924	3,511	587	20.1
Canada	766	943	177	23.1
Sweden	762	794	32	4.2
Finland	617	962	345	55.9
Other Western Europe	1,216	1,729	513	42.2
Latin America	377	1,766	1,389	368.0
Eastern Europe	99	186	87	88.0
Other	226	313	87	38.6
TOTAL	12,427	15,922	3,495	28.1

Source: FAO Capacity Survey, 1974

TABLE A-6

AVERAGE ANNUAL INCREASE IN WORLD PULP AND PAPER CAPACITIES
(percent)

	1963-1968	1968-1973	1973-1977
Total Paper and Paperboard	5.8	4.7	4.1
Total Paper Pulp	6.2	4.2	3.7
Printing and Writing, excl. Newsprint	6.0	5.2	4.0
Other Paper and Paperboard			4.4
Semi-Chemical Wood Pulp	7.4	4.8	4.5
Chemical Wood Pulp			3.8
Bleached Pulp			4.3

Source: FAO 1974 Capacity Survey

TABLE A-7

FREE-WORLD BLEACHED PAPER-GRADE PULP DEMAND, 1975-1980
(thousands of tons)

Application	1975	1980	Average Annual Growth (%)
Printing & Writing Papers (exc. Newsprint)	20,700	25,200	4.0
Tissue	4,100	4,700	2.9
Bleached Paperboard	4,500	5,400	3.7
Newsprint	4,400	4,900	2.3
Fluffing Pulp	700	1,200	11.5
TOTAL	34,400	41,400	3.8
Kraft	29,000	36,300	4.6
Sulfite	5,350	5,200	-0.7

There are no significant imports of any of the containerboard materials. Large amounts of linerboard are exported, however. Domestic kraft linerboard producers are in a favorable export position, because they have generally cheaper wood and larger, more efficient mills than competitive producers.

While about 70 U.S. companies produce linerboard, corrugating medium, or both, the 13 largest account for nearly 80% of the U.S. production capacity for these materials, as shown in Table A-8.

In terms of geographical distribution, about 85% of U.S. kraft linerboard production is in the South and the remainder is in the West. Production of semi-chemical corrugating medium is distributed roughly 60% in the Northeast and North Central regions, 35% in the South, and 5% in the West, in approximate relationship to the distribution of the hardwood timber used for this product. Recycled corrugating medium, linerboard, and chipboard production is located close to the major population centers.

TABLE A-8

MAJOR CONTAINERBOARD PRODUCERS

Company	1973 Linerboard and Corrugating Medium Capacity	
	Tons/Day	% of U.S. Capacity
International Paper	5,605	9.9
Container Corporation	5,105	9.0
Weyerhaeuser	4,400	7.8
St. Regis	3,940	7.0
Westvaco	3,435	6.1
Union Camp	3,100	5.5
Owens-Illinois	2,970	5.3
Mead	2,890	5.1
Inland Container	2,540	4.5
Crown Zellerbach	2,440	4.3
Continental Can	2,410	4.3
Great Northern-Nekoosa	2,100	3.7
Hoerner-Waldorf	1,625	2.9
Total	42,560	75.4

Source: Lockwood's Directory of the Paper and Allied Trades, 1974

b. Supply/Demand Trends

Table A-9 compares our projections of containerboard demand with producers' expectations of capacity expansion through 1977. This indicates that unbleached kraft paperboard (mainly linerboard) was in extremely tight supply in 1973 and should be in equally tight supply as the economy fully recovers from the effects of the recession. The capacity for recycled linerboard is expected to grow rapidly from a very small base, and its producers should continue to enjoy relatively high operating rates through 1977, in light of the tight supply which we foresee for kraft linerboard. If it were not for the capacity constraint in unbleached kraft paperboard, exports of kraft linerboard would probably grow at a higher rate than we have projected, since there has been a similar slowdown in linerboard capacity expansion throughout the world.

Corrugating medium was in tight supply in 1973, but has been in oversupply during the recession. Since announced capacity expansions indicate a rate of growth significantly higher than our demand projections, the oversupply is likely to continue through 1977.

TABLE A-9

CONTAINERBOARD SUPPLY/DEMAND TRENDS

	Preliminary 1973 (000 tons)	Average Growth (%/Year)	Projected 1977 (000 tons)
UNBLEACHED KRAFT PAPERBOARD[a]			
Production	13,560	3.0	15,300
Capacity	13,898	3.0	15,623
Apparent Operating Rate	98%		99%
RECYCLED LINERBOARD			
Production	284	18.0	550
Capacity	306	18.9	612
Apparent Operating Rate	93%		90%
CORRUGATING MEDIUM			
Production	5,303	3.0	5,915
Capacity	5,564	6.1	7,050
Apparent Operating Rate	95%		85%
CONTAINER CHIPBOARD			
Production	247	3.0	280
Capacity	349	5.4	430
Apparent Operating Rate	71%		54%

[a]Excludes tube, can, and drum paperboard

Source: Capacity - "Paper and Paperboard Wood Pulp Capacity," American Paper Institute, 1974
Production - "Statistics of Paper and Paperboard," American Paper Institute, 1974
1977 Projections - Arthur D. Little, Inc.

However, it is possible for some producers of semi-chemical corrugating medium to make linerboard on their machines; similarly, those who make recycled corrugating medium can shift to linerboard or folding boxboard. Such shifts in product mix may entail some economic sacrifice, but perhaps not as much as if the producers continued to make only corrugating medium at a low operating rate.

Container chipboard was in plentiful supply in 1973 and should remain so through 1977. This product is generally made on relatively old, slow cylinder machines; economical production does not require as high an operating rate as does linerboard or corrugating medium. Here again, producers could shift to other recycled paperboard products; this contributed to a relatively tight supply condition in 1973 and should help to alleviate the low operating rate projected for 1977.

3. FOLDING BOXBOARD

a. Demand/Consumption Trends

Apparent domestic boxboard consumption was about 8.2 million tons in 1973. Total domestic consumption increased at the rate of about 1% per year from 1968 to 1973. Solid bleached paperboard consumption increased at the rate of about 3% per year from 1968 to 1973, while consumption of recycled paperboard declined at the rate of about 2.1% per year during this period. SBS board gained market share at the expense of recycled board, primarily because its performance/cost relationship is superior to that of recycled board in many of the applications where they compete directly. Boxboard markets have been seriously penetrated by plastics.

b. Production/Capacity Trends

Total 1973 U.S. boxboard production was about 8.5 million tons. SBS board capacity was approximately 3.39 million tons in 1973, and the apparent SBS board capacity utilization ratio was about 98%. Total recycled paperboard capacity (including recycled boxboard and other recycled paperboard grades) was about 8.3 million tons in 1973, and the industry's capacity utilization ratio was about 95%. Announced expansion plans indicate that SBS board capacity will be expanded at the rate of about 2.7% per year through 1977, while recycled board capacity will be expanded at the rate of about 4.5% per year. (Allocating total recycled paperboard capacity to specific products, e.g., recycled boxboard, is an arbitrary process, since a recycled paperboard machine can readily switch to a variety of recycled board grades. Thus, total production and capacity of recycled paperboard are the most meaningful numbers to use in estimating capacity utilization ratios.)

Most of the bleached paperboard mills are located near their fiber resources in the South and West. Most recycled boxboard mills are located in major population centers so that they can obtain sufficient supplies of waste paper raw material and can be near the major folding carton and set-up box converting plants.

Imports of both bleached paperboard and recycled boxboard are insignificant. There are no significant exports of recycled boxboard, since the wastepaper furnished is economically available in all industrialized regions. However, there are some exports of bleached paperboard (about 7% of 1973 production) to markets where U.S. producers are competitive by virtue of their large scale and relatively low-cost fiber resources.

c. Industry Structure

Table A-10 shows that there are only about twenty SBS board producers in the United States. The six largest accounted for approximately 52% of 1974 U.S. bleached paperboard capacity. Thus, bleached paperboard is a concentrated market sector. The recycled board sector is much more fragmented. Table A-11 shows that while seven recycled board producers accounted for about 50% of total recycled board capacity in 1974, at least 45 other producers accounted for the remaining capacity.

d. Supply/Demand Trends

Table A-12 shows projected supply/demand trends to 1977 for bleached paperboard and folding and set-up recycled paperboard. Both bleached paperboard and folding recycled paperboard were in extremely tight supply in 1973; hence these should be similarly tight in 1977 as the economy recovers from the recession. However, a number of recently announced bleached paperboard expansions due to come on stream in 1978 could cause a modest oversupply in that year. Demand for set-up recycled paperboard is declining slowly, partly due to competition from folding cartons and plastics; this trend is likely to cause an oversupply of set-up recycled boxboard by 1977 unless the equivalent of one mill is closed or shifted to other products by that time.

In years past, bleached paperboard displaced recycled paperboard in a number of folding carton applications. Because of this and the growth of its other markets, bleached paperboard demand grew about 5% per year during the 1950's and 1960's while the demand for recycled paperboard hardly grew at all. Now, however, the extremely rapid cost/price increase for bleached pulp has made bleached paperboard less cost-competitive with recycled paperboard in folding applications. Also, we expect renewed competition between plastics and bleached paperboard in milk cartons, cups, plates, and trays. Therefore, we project that bleached and recycled paperboard will grow at about the same rate, albeit a relatively slow one (roughly 2% per year).

4. NEWSPRINT AND UNCOATED GROUNDWOOD PAPER

a. Demand

Most newsprint is sold direct to the daily newspaper publishers and the multiple-newspaper printing plants. A small portion (less than 5%) is distributed to paper merchants and to small users, such as small weekly newspaper publishers, shopping newspaper publishers, and general commercial printers.

TABLE A-10

LEADING U.S. SOLID BLEACHED BOARD PRODUCERS (percent of U.S. 1974 capacity)

Producer	%
International Paper	18.7
Westvaco	9.4
Potlatch	6.4
Continental Can	6.2
Eastex	5.8
Weyerhaeuser	5.7
Top six producers	52.2
Others (roughly 15 companies)	47.8
TOTAL	100

Source: Lockwood's Directory of the Paper and Allied Trades; Industry Contacts; Arthur D. Little, Inc., estimates

TABLE A-11

LEADING U.S. RECYCLED BOXBOARD PRODUCERS (percent of 1974 U.S. capacity[a])

	% of Total
Federal	13.9
Container Corporation of America	11.2
Packaging Corporation of America	6.3
Whippany	5.3
Brown Paper Company	4.9
Michigan Carton (St. Regis)	4.7
Simkins Industries	4.5
Top Seven Producers	50.8
Others (roughly 45 companies)	49.2
Total	100

[a] Includes folding and set-up boxboard.

Source: Derived from Lockwood's Directory of the Paper and Allied Trades, Industry Contacts, and Arthur D. Little, Inc. estimates.

TABLE A-12

BOXBOARD SUPPLY/DEMAND TRENDS

Product Category	Preliminary 1973 (000 tons)	Average Growth (%/yr)	Projected 1977 (000 tons)
BLEACHED PAPERBOARD			
Domestic demand	3,655	2.0	3,960
Exports and other	265	3.0	300
Total demand for U.S. Production	3,920	2.1	4,260
Capacity	3,928	1.9	4,237
Apparent Operating Rate	100%		100.5%
FOLDING RECYCLED PAPERBOARD			
Total Demand for U.S. Production	2,763	2.0	2,990
Capacity	2,664	1.6	2,836
Apparent Operating Rate	100.5%		105%
SET-UP RECYCLED PAPERBOARD			
Total demand for U.S. Production	465	-1.0	450
Capacity	518	0.4	527
Apparent Operating Rate	90%		85%
OTHER COMBINATION BOARD - NONBENDING			
Total demand for U.S. Production	526	2.0	570
Capacity	584	1.6	620
Apparent Operating Rate	90%		92%

Sources: Capacity and 1973 Demand - American Paper Institute; Demand Projections -- Arthur D. Little, Inc.

Most uncoated groundwood papers are distributed directly to large end-users, such as catalog and directory publishers and the large paperback book publishers; however, a substantial amount (probably more than 25%) is distributed through paper merchants to small users as the smaller magazine publishers and general commercial printers.

U.S. newsprint consumption has increased at an average rate of 2.5%/year since 1964. This puts it in one of the slower growth categories in the industry. As consumption is highly related to population, all metropolitan newspapers have shown relatively slow growth, and many large metropolitan dailies have ceased publication in recent years. However, growth in the suburbs has counteracted this trend.

Advertising space is the key determinant of newspaper size or lineage and thus also significantly affects newsprint consumption. Newspaper advertising has faced stiff competition from radio and particularly TV advertising media.

Recently, a few new applications for newsprint have begun to develop in areas where no more than short-term use is required. The increasing price differential between newsprint and groundwood-free papers which occurred in 1964 provided increased incentive to shift to newsprint. One such relatively new application is in business forms, where approximately 100,000 tons of newsprint and uncoated groundwood paper was substituted for the traditional register bond paper in 1974.

U.S. consumption of uncoated groundwood papers grew at the average rate of 4.2%/year (1964-1974), making it a somewhat higher growth area than newsprint. However, uncoated groundwood papers have been replaced by coated papers in catalogs and magazines, and their consumption has also suffered from the demise of low-cost pulp magazines and comic books. The major recent growth areas have been telephone directories and paperbacks. Demand appears to be currently bolstered by the fact that the price differential with groundwood-free printing papers has widened appreciably during 1975. For example, there is currently a $205/ton differential between No. 3 offset uncoated book and catalog-grade groundwood paper; in January 1974, the differential was about $100/ton. This should increase uncoated groundwood paper use in a number of commercial printing applications.

b. Supply and Industry Structure

Canadian newsprint mills play a pivotal role in supplying U.S. needs and, hence, are of prime importance in the industry's competitive structure. In 1974, Canadian mills supplied about 70% of the U.S. demand for newsprint, and U.S. mills supplied the remaining 30%.

Table A-13 lists the capacities of the major North American newsprint suppliers. This does not necessarily reflect their share of the U.S. market, since many Canadian producers also have substantial overseas exports. The recent acquisition of the Price Company by Abitibi Paper Company has given it a dominant 17% share of North American capacity. International Paper, with a 10% share, traditionally was the major supplier.

TABLE A-13

CAPACITIES OF MAJOR NORTH AMERICAN NEWSPRINT SUPPLIERS, 1974

Company	Capacity (000 tons/yr) U.S.A.	Canada	Total	Percent of North American Capacity
Abitibi-Price	235	2,179	2,414	17.0
International Paper	243	1,156	1,399	9.9
MacMillan-Bloedel		1,380	1,380	9.7
Consolidated Bathurst		1,043	1,043	7.4
Bowaters	437	603	1,040	7.4
Ontario Paper		731	731	5.2
Kimberly-Clark	420	174	594	4.2
Boise Cascade	212	317	529	3.7
Southland Paper Mills	474		474	3.3
Crown Zellerbach	217	256	473	3.3
Great Lakes Paper		439	439	3.1
Garden State & FSC Paper	372		372	2.6
Great Northern - Nekoosa	360		360	2.5
Publishers Paper	360		360	2.5
Total				78.5

Source: "Newsprint Statistics," American Newspaper Publishers Assn., April 12, 1974

North American newsprint supply is relatively concentrated. The top 14 firms have a nearly 80% share of the total North American capacity and about an equal total share of the North American market. The flow of newsprint from Canada to the United States, as well as to other countries, is facilitated by the fact that most countries have no import duties on this product.

Table A-14 lists the capacities of the major U.S. uncoated groundwood paper producers. Imports of groundwood paper from Canada or elsewhere are not significant (117,000 tons in 1974); an import duty, coupled with the freight advantage enjoyed by U.S. producers in shipping this product, make it difficult for nondomestic suppliers to compete.

Traditionally, the uncoated groundwood paper market has been viewed as an alternative use for old newspaper machines that are no longer competitive in the newsprint market. This is the route of entry used by all current suppliers. Recently, however, Great Northern-Nekoosa and Fraser Paper have installed new machines to increase their market share. These two companies, along with Bowaters and St. Regis, are the major U.S. producers.

TABLE A-14

CAPACITIES OF MAJOR U.S. UNCOATED GROUNDWOOD PAPER SUPPLIERS, 1974

	Rank	Capacity (tons/day)	% Total	No. Mills
Great Northern Nekoosa	1	1,132	27.4	2
Bowaters	2	695	16.8	1
St. Regis	3	512	12.4	2
Fraser	4	356	8.6	1
Appleton	5	236	5.7	1
Crown Zellerbach	6	220	5.3	2
Total			76.2	

Source: Lockwood's Directory, 1975.

All of the virgin fiber newsprint producers and all but a few of the smaller uncoated groundwood paper producers control, via ownership or lease, at least a portion of the woodlands needed to supply their mills and are vertically integrated to the production of groundwood and often chemical pulp. The two major recycled newsprint suppliers, Garden State and FSC Paper, operate their own waste paper collection organizations to assure a continuing supply of waste paper.

c. Supply/Demand

Table A-15 shows projections of U.S. supply/demand trends for newsprint and uncoated groundwood papers through 1977. Both products had extremely high operating rates in 1973. (A 95-97% average operating rate is considered maximum capacity for newsprint mills over a full year.) The 104% apparent operating rate for uncoated groundwood paper suggests that some was made on newsprint machines in that year. In part, the tight supply of newsprint in 1973 was caused by newsprint-mill and railroad strikes in Canada, particularly during the third quarter.

Our projections of U.S. demand and net imports of newsprint and uncoated groundwood papers indicate that, in light of the capacity expansion plans reported by the American Paper Institute, a tight supply situation will again be reestablished by 1977 as the economy continues to improve. We have also examined the capacity expansion plans of the Canadian producers, as reported by the Canadian Pulp and Paper Association; these indicate that the Canadian producers will be hard-pressed to supply the U.S. demand for newsprint over the next decade. In the past few years the Canadian producers changed their product specification from a 32-pound basis weight sheet to stretch the available fiber resources and thereby facilitate incremental expansion of existing mills.

While the markets for newsprint and uncoated groundwood paper are extremely mature, demand is currently being bolstered by the fact that the price differential between groundwood-free printing papers and groundwood papers has widened appreciably over the past year with the rapid increase in bleached pulp prices, as was discussed above.

5. PRINTING, WRITING AND RELATED PAPERS

a. Demand

Printing and writing papers are used in a variety of applications; hence consumption is influenced by a number of different demand patterns. For example, coated printing paper, particularly the publication grade, is influenced not only by the business-cycle effect on advertising expenditures but also upon competition among the media. Textbooks use uncoated book, offset paper, and coated paper with a non-groundwood base sheet; thus, these grades are heavily influenced by federal and state aid to education programs. The diversity of end uses for printing paper causes its consumption to correlate well with the GNP. The consumption of register bond or forms bond, one of the largest components of the writing paper grade category, fluctuates closely with the industrial production index.

TABLE A-15

GROUNDWOOD PAPER SUPPLY/DEMAND TRENDS

	Preliminary 1973 (000 tons)	Average Growth (%/yr)	Projected 1977 (000 tons)
NEWSPRINT			
U.S. Demand[a]	10,726	2.6	11,900[b]
Less: Net Imports	7,313	2.4	8,100[b]
Demand for U.S. Production	3,413	2.7	3,800[b]
Capacity	3,597	2.2	3,925[b]
Apparent Operating Rate	95%		97%
UNCOATED GROUNDWOOD PAPERS			
Demand	1,560	2.2	1,700
Less: Net Imports	99	19.2	200
Demand for U.S. Production	1,461	0.7	1,500
Capacity	1,403	1.0	1,462
Apparent Operating Rate	104%		103%

[a]U.S. consumption of newsprint in 1973 was reported as 10,504,000 tons by the American Newspaper Publishers Association ("Newsprint Statistics," April 1974)

[b]Tonnage figures are based on 31.5 pound/ream newsprint; data should be reduced by about 5% to reflect 30 pound/ream newsprint, which is now the predominant basis weight.

Source: Capacity - "Paper and Paperboard Wood Pulp Capacity," American Paper Institute, 1974
Demand - "Quarterly Industrial Report: Pulp, Paper, and Board," U.S. Department of Commerce, Domestic and International Business Administration, Bureau of Domestic Commerce, July 1974, and Arthur D. Little, Inc. projections.

On a tonnage basis, U.S. consumption for the total of all printing and writing paper grades grew at the rate of 5.5% per year in 1960-1973 and 5.2% per year in 1968-1973. Within this grade spectrum, forms bond grew about 10% per year, while coated-one-side paper grew about 2% per year.

b. Supply and Industry Structure

Printing and writing papers are produced by an extremely wide variety of processes. These include paper mills integrated to all of the bleached chemical pulps (kraft, sulfite, soda, and cotton fiber), to groundwood pulp, and to deinked wastepaper, as well as mills not integrated to pulp. In general, the producers of the large-volume commodity grades are fully integrated to kraft, groundwood, or sulfite pulp mills, while the producers of higher priced specialty papers are either not integrated or partially integrated to chemical fiber or deinked pulp. Table A-16 shows the 1973 production volume for the principal products in this sector.

Table A-17 lists the 15 major U.S. printing and writing paper producers and their share of U.S. capacity in 1974. The market is relatively fragmented compared with most other paper industry product sectors; the 15 largest producers, all of whom are integrated to pulp, account for only 66% of U.S. capacity, and nearly 60 other firms also compete in this product sector.

TABLE A-16

U.S. PRODUCTION OF PRINTING, WRITING, AND RELATED PAPER PRODUCTS, 1973

Product Category	Production (000 tons)
Coated Printing and Converting	
Coated, two sides	3,389
Coated, one side	457
Subtotal	3,846
Uncoated Book Paper	
Publication and Printing	2,011
Body Stock for Coating	27
Other	1,024
Subtotal	3,062
Writing and Related Papers	
Writing, Chemical Wood Pulp	3,091
Writing, Cotton Fiber	124
Cover and Text	221
Thin Paper	345
Subtotal	3,781
TOTAL	10,689

TABLE A-17

CONCENTRATION IN U.S. PRINTING AND WRITING PAPER SUPPLY
(percent of U.S. capacity)

Company	Approximate Share
Champion	8
Inernational Paper	7
Mead	6
Boise Cascade	5
St. Regis	4
Westvaco	4
Consolidated	4
Crown Zellerbach	4
Hammermill	4
Great Northern Nekoosa	4
Scott Paper	4
Fraser	3
Weyerhaeuser	3
Potlatch	3
Allied	3
Subtotal	66
Other Suppliers (59)	34
TOTAL	100

Sources: Arthur D. Little, Inc., estimates based on Lockwood's Directory of the Paper and Allied Trades (1975), and corporate annual reports

c. Supply/Demand Trends

Table A-18 shows 1973 operating rates for major product categories within the printing, writing, and related paper sector and projects their operating rates to 1977. It indicates that as the economy recovers, the coated paper, uncoated book, chemical writing, and thin paper product categories should reestablish by 1977 the extremely high operating rates they enjoyed in 1973.

Cotton fiber writing paper is the only category that is likely to experience a drop in operating rates by 1977; however, the mills in this category characteristically maintain relatively low operating rates compared with other categories in the printing and writing paper sector.

We expect the highest rate of growth in demand to occur in the uncoated book, chemical writing, and thin paper category, although only slightly above that of our assumed growth of real GNP of 3.5%/year. Within this category, computer forms bond is growing at an above-average rate; uncoated book and stationary paper are growing at about an average rate, and thin papers are below average. In the coated papers sector, magazine applications are growing only about 3% per year, but somewhat higher growth is expected in textbooks and other coated paper applications.

TABLE A-18

PRINTING, WRITING, AND RELATED PAPER SUPPLY/DEMAND TRENDS

Product Category	Preliminary 1973 (000 tons)	Average Growth (%/yr)	Projected 1977 (000 tons)
COATED PRINTING & CONVERTING			
Total demand for U.S. Production	3,846	3.5	4,410
Capacity	4,045	3.4	4,621
Apparent Operating Rate	95%		96%
UNCOATED BOOK, CHEMICAL WRITING, AND THIN			
Total demand for U.S. Production	6,719	4.0	7,860
Capacity	6,883	4.4	8,162
Apparent Operating Rate	98%		97%
COTTON FIBER WRITING PAPERS			
Total demand for U.S. Production	124	-	120
Capacity	149	0.6	153
Apparent Operating Rate	83%		78%

Source: Capacity - "Paper and Paperboard Wood Pulp Capacity," American Paper Institute, 1974
Demand - "Quarterly Industrial Report: Pulp, Paper, and Board," U.S. Department of Commerce, Domestic and International Business Administration, Bureau of Domestic Commerce, July 1974, and Arthur D. Little, Inc. projections

6. TISSUE AND RELATED PAPERS

a. Demand

Total domestic U.S. tissue consumption increased at the rate of about 6% per year from 1963 to 1968 and about 3.2% per year from 1968 to 1973. The recent slower growth rate indicates that this market is maturing. In the 1950's and 1960's, consumer sanitary tissue displaced reusable fabrics in the napkin and towel product categories. The tissue market was then one of the fastest growing markets in the pulp and paper industry. Within the last few years, however, most of this displacement has been completed, and consumer tissue consumption has increased at a lower rate.

The consumption of tissue in the industrial (non-sanitary) market also increased rapidly in the 1960's as the fast-food industry proliferated and the demand for paper disposables increased accordingly. While the consumption of industrial tissue has increased at a higher rate than that of consumer tissue in recent years, the rate of growth in industrial tissue consumption has decreased as a result of slowing of the growth rate of the fast-food/institutional food businesses.

The demand for tissue products in the future is expected to be related to a larger degree to such factors as consumer disposable income and population growth, since tissue displacement of reusable fabrics has subsided. Thus, the tissue market will probably grow more slowly than real GNP over the next five years. However, the consumer segment of the tissue industry will also probably be more recession-proof and less subject to cyclical swings in consumption levels than the pulp and paper industry or the economy as a whole.

b. Production/Capacity Trends

Table A-19 shows 1974 U.S. tissue production by major product. Capacity in 1974 was approximately 4.3 million tons. Thus, the apparent 1974 industry operating rate was about 93%-94%. Announced plans indicate that tissue capacity will be expanded at the rate of about 2.7% per year through 1977.

Unlike other paper industry sectors, tissue production is spread evenly throughout the country(concentrated near major metropolitan areas), rather than being centered near the fiber resource areas of the South and West.

The import/export balance is not an issue as far as productive tissue capacity is concerned. There have been no significant imports of any tissue materials to the United States in the last 10 years. Exports of tissue products have been less than 1% of total U.S. production over this period. The reason for this low level of international trade is the high bulk of tissue, which makes it very expensive to ship over long distances.

c. Industry Structure

Compared with other pulp and paper industry markets, tissue is a relatively concentrated market sector. Table A-20 shows that the four largest producers accounted for more than 50% of total U.S. tissue productive capacity in 1974.

In addition to having substantial financial resources, the leading tissue producers are largely vertically integrated. They are integrated to pulp on a company basis, although not necessarily on a mill-site basis; more than half of the output of this industry comes from tissue mills not integrated on-site to tissue converting. The practice of these industry leaders implies that substantial vertical integration is an important component for success in the tissue industry.

d. Supply/Demand Trends

Table A-21 shows our projection of the operating rate in the tissue paper sector through 1977. The operating rate is likely to be very high in 1977 because of slow capacity expansion and an assumed recovery from the current recession in 1976. In this sector of the industry, an average 95% operating rate over a full year is a practical maximum.

TABLE A-19

1974 TISSUE PRODUCTION BY PRODUCT

Sanitary	000 Tons	% of Total
Bathroom Tissue	1474	36
Towels	1332	33
Napkins	439	11
Facial Tissue	355	9
Wipers	43	1
Other Sanitary	176	4
Total Sanitary Tissue	3819	94
Non-Sanitary (Industrial)		
Wrapping	66	1.5
Waxing	52	1.3
Industrial Cellulose Wadding	32	0.7
Miscellaneous Tissue	108	2.5
Total Non-Sanitary Tissue	258	6
TOTAL	4077	100

Source: "Statistics of Paper and Paperboard," American Paper Institute, 1975 (Data are preliminary)

TABLE A-20

MAJOR U.S. TISSUE PRODUCERS
(percent of 1974 U.S. capacity)

Scott	24.1
Procter and Gamble	12.8
American Can	9.0
Kimberly Clark	8.6
Crown Zellerbach	6.7
Fort Howard	6.6
Georgia Pacific	6.0
Other (44 companies)	26.2
TOTAL	100.00

Sources: Derived from Lockwood's 1975 Directory of the Paper and Allied Trades; industry contacts; Arthur D. Little, Inc., estimates.

TABLE A-21

TISSUE PAPER SUPPLY/DEMAND TRENDS, 1973-1977

	Preliminary 1973 (000 tons)	Average Growth (%/Year)	Projected 1977 (000 tons)
Demand for U.S. Production			
Sanitary Tissue	3,735	3	4,200
Non-Sanitary Tissue	248	2	270
Total Demand	3,983	2.9	4,470
Capacity	4,303	2.2	4,697
Apparent Operating Rate	93%		95%

Source: American Paper Institute (1973 shipments and capacity data) and Arthur D. Little, Inc., demand projections.

Our demand projections might be optimistic, in light of current economic conditions, the rapid price increase for tissue products, and the slowing of population growth. However, even if the sanitary tissue sector were to grow only 2% annually, the tissue industry operating rate would average around 92% of capacity in 1977, which is still relatively high.

Both the sanitary and non-sanitary tissue product categories have reached nearly full maturity and are now growing at only slightly above the population growth rate. In the 1950's and the 1960's, sanitary tissue demand grew an average of 5% per year, when it was still displacing cloth products. There are no cheaper substitues for sanitary tissue products, but rising prices are likely to cause consumers to economize on their use; i.e., there is some elasticity to the demand. However, demand for industrial tissue products is likely to be more price-elastic than that for sanitary tissue.

In the non-sanitary tissue area, waxing tissue is being displaced by plastic films and foil packaging materials. However, consumption of waxed paper has already declined to such an extent that the substitution trend has probably nearly run its course. The growth of wrapping tissue and industrial cellulose wadding is likely to parallel industrial production.

7. INDUSTRIAL PACKAGING AND CONVERTING PAPERS

a. Industry Structure

Table A-22 lists the 1973 production of the major products comprising the industrial packaging and miscellaneous converting paper functional group. Table A-23 lists the 1973 capacities of the ten largest producers of unbleached kraft and other packaging and industrial converting papers. These firms concentrate on the production of unbleached kraft grades as opposed to the other packaging and converting grades. Together, they account for over 50% of U.S. unbleached kraft paper capacity. All are vertically integrated from woodlands to the converting and marketing of multi-wall grocery and other bags.

Thilmany Pulp and Paper Company is the largest producer of packaging and converting papers other than unbleached kraft and is one of the few that specializes in this product line. This industry sector, however, is much more highly fragmented than the unbleached kraft papers sector; many companies produce these grades as a small part of their total production. In addition, there is a much lower incidence of complete vertical integration of woodlands to converted product.

Table A-24 shows the major producers of special industrial paper. Although the average producer is relatively small (under 100,000 tons/year), there is a fair degree of concentration in this sector; the top ten firms account for over 60% of the total capacity in this highly specialized product line. Most producers are not integrated to pulp production but rely on purchased pulp or waste paper for their fiber requirements.

Tube, can, and drum paperboard and special combination paperboard are often produced as a relatively small portion of the product lines of the recycled boxboard companies. Sonoco Products Company is one of the few major firms to concentrate the production of several of its mills in this product area. The market is relatively fragmented. In most respects, it has the same characteristics as the recycled folding boxboard sector, except that there is little or no forward integration to converting.

b. Supply/Demand Trends

Table A-25 shows the projected 1977 supply/demand balances for each of the major grades that make up the industrial packaging and converting papers functional group. In each case, 1977 operating rates are expected to be about equal to the fairly high rates that prevailed in 1973.

The rate of growth in demand for unbleached kraft and other packaging papers is very low, as we have noted earlier, primarily because of displacement by plastic films. However, since the rate of capacity expansion for these papers is also low, a tight supply/demand balance should be re-established as the U.S. economy improves.

TABLE A-22

PRODUCTION OF INDUSTRIAL PACKAGING AND MISCELLANEOUS CONVERTING PAPERS, 1973

Grades	Production 000 tons	Production % of Total
Unbleached Kraft Packaging and Industrial Converting		
Wrapping	248	
Shipping sack	1,133	
Bag and sack, excluding shipping	1,987	
Other converting	643	
Subtotal	4,011	50.6
Packaging and Industrial Converting, Excluding Unbleached Kraft		
Wrapping	168	
Shipping sack	102	
Bag and sack exc. shipping	254	
Other converting	497	
Glassine, greaseproof, and vegetable parchment	236	
Subtotal	1,258	15.9
Other Converting Paper and Paperboard		
Special industrial paper	564	7.1
Tube, can and drum paperboard (recycled)	901	11.4
Special combination paperboard	1,191	15.0
TOTAL	7,925	100.0

Source: Bureau of the Census, Industry Division, Pulp, Paper and Board and American Paper Institute (tube, can and drum and special combination paperboard)

TABLE A-23

CAPACITIES OF MAJOR PRODUCERS OF UNBLEACHED KRAFT AND OTHER PACKAGING AND INDUSTRIAL CONVERTING PAPER PRODUCTS, 1973

Company	Capacity (000 tons)	Capacity (% of Sector Total)
International Paper	568	10.5
St. Regis	441	8.1
Union Camp	320	5.9
Crown Zellerbach	411	7.6
Longview Fibre	230	4.2
Hudson Pulp and Paper	195	3.6
Gulf States Paper	177	3.3
Hoerner Waldorf	177	3.3
Georgia-Pacific	156	2.9
Thilmany Pulp and Paper	142	2.6
Subtotal	2,817 +	51.9 +
Other Producers	2,613	48.1
TOTAL	5,430	100

Source: "Lockwood's Directory of the Paper and Allied Trades," 1974; "Paper and Paperboard Wood Pulp Capacity, 1973-1976," American Paper Institute, 1974

TABLE A-24

CAPACITIES OF MAJOR PRODUCERS OF SPECIAL INDUSTRIAL PAPER, 1973

Company	Capacity (000 tons)	Capacity (% of Sector Capacity)
Homosote Company	113	17.9
Riegel Products Corporation	55	8.7
Standard Packaging	42	6.7
Hollingsworth and Vose	39	6.2
Fitchburg Paper	32	5.1
Schoeller Technical Division of Mead	24	3.8
Allied Paper	24	3.8
Nicolet Industries	23	3.7
Beverage Paper	23	3.7
Rochester Paper	23	3.7
Subtotal	398	63.3
Other Producers	231	36.7
TOTAL	629	100.0

Source: "Lockwood's Directory of the Paper and Allied Trades," 1974; "Paper and Paperboard Wood Pulp Capacity, 1973-1976," American Paper Institute, 1974

TABLE A-25

SUPPLY/DEMAND TRENDS FOR INDUSTRIAL PACKAGING, CONVERTING, AND MISCELLANEOUS PAPERS

	Preliminary 1973 (000 tons)	Average Growth (% Year)	Projected 1977 (000 tons)
UNBLEACHED KRAFT PAPER			
Demand for U.S. Production	4,011	1.2	4,200
Capacity	4,138	1.0	4,303
Apparent Operating Rate	97		98
OTHER PACKAGING PAPER			
Demand for U.S. Production	1,258	0.2	1,270
Capacity	1,292	0.3	1,306
Apparent Operating Rate	97		97
SPECIAL INDUSTRIAL PAPER			
Demand for U.S. Production	564	3.5	650
Capacity	629	3.2	713
Apparent Operating Rate	90		91
SPECIAL RECYCLED PACKAGING PAPERBOARD[a]			
Demand for U.S. Production	1,540	4.0	1,800
Capacity	1,637	3.7	1,895
Apparent Operating Rate	94		95

[a] Includes tube, can, and drum stock; 1973 data from API

Because of its specialty product nature and the highly fragmented lines of most producers, special industrial paper is not a typical pulp and paper commodity product: a 90-92% operating rate is about the practical maximum for this grade over the course of a year. Here again, the growth in capacity approximates the projected growth in demand between 1973 and 1977, indicating that a relatively tight supply/demand balance will prevail. A similar projection holds for special recycled packaging and converting paperboard.

8. CONSTRUCTION PAPER AND PAPERBOARD

a. Industry Structure

Tables A-26 and A-27 show the capacity shares of the major producers of construction paper and gypsum linerboard respectively. Both markets are highly concentrated from a supply standpoint. All of the construction paper producers are integrated forward to the conversion of final products such as shingles, tar paper, and sheathing paper; their plants are generally near major metropolitan areas, which provide a supply of waste paper as well as the primary market for the end product. Similarly, all the gypsum linerboard producers make gypsum wallboard in plants that are close to a source of gypsum.

TABLE A-26

MAJOR PRODUCERS OF CONSTRUCTION PAPER

Company	1973 Capacity (000 tons)	% of Sector Total
Celotex Company	358	17.0
GAF Corp	367	17.5
Lloyd A. Fry Roofing	240	11.4
Certain-Teed Products	218	10.4
Bird & Son	175	8.3
Johns Manville	195	9.3
Subtotal	1,533	73.9
Other Producers	549	26.1
TOTAL	2,102	100.0

Sources: Lockwood's Directory of the Paper and Allied Trades, 1974, and American Paper Institute Capacity Survey, 1974.

TABLE A-27

MAJOR PRODUCERS OF GYPSUM LINERBOARD

Company	1973 Capacity (000 tons)	% of Sector Total
National Gypsum	411	37.6
U.S. Gypsum	259	23.7
Georgia Pacific	121	11.1
Celotex	104	9.5
Subtotal	895	81.9
Other Producers	198	18.1
TOTAL	1,093	100.0

Sources: Lockwood's Directory of the Paper and Allied Trades, 1974 and American Paper Institute Capacity Survey, 1974

Table A-28 lists the major producers of hardboard and insulation board and their share of total production capacity. The hardboard market is highly concentrated, as the five top producers account for about 52% of total capacity. The insulation board sector is almost as concentrated, with the five top producers accounting for 48% of capacity.

The largest centers of hardboard and insulation board production are in the North Central, Western, and Southern regions. Most of the major producers are integrated back to woodland control, although not specifically for these products, since they are made primarily from sawmill and plywood mill wood residues.

b. Supply/Demand Trends

Table A-29 shows projections of supply and demand for the various sectors of the construction paper and paperboard functional group. In all of these sectors, 1977 operating rates are likely to be about as high as those that prevailed in 1973. Demand in all sectors is highly sensitive to construction industry activity, and our demand projections assume that housing starts will return to an annual level of about two million by 1977.

TABLE A-28

CAPACITIES OF MAJOR PRODUCERS OF HARDBOARD AND INSULATION BOARD

Company	Percent of Total Industry Capacity
A. Hardboard[a]	
Masonite	34
Abitibi	8
Superwood	6
U.S. Plywood (Champion International)	5
Georgia-Pacific	5
U.S. Gypsum	5
Celotex (Jim Walter)	5
Evans Products	4
B. Insulation Board[b]	
Celotex	19
Boise Cascade	13
Armstrong Cork	12
Weyerhaeuser	8
U.S. Gypsum	8
Temple Industries	7

Sources:
a. Annual reports, company data, and contractors' estimates
b. Arthur D. Little, Inc., "Economic Analysis of Proposed Effluent Guidelines," EPA 230/2-74-029, August 1974.

TABLE A-29

CONSTRUCTION PAPER AND BOARD SUPPLY/DEMAND TRENDS

	Preliminary 1973 (000 tons)	Average Growth (%/yr)	Projected 1977 (000 tons)
CONSTRUCTION PAPER			
Demand for U.S. Production	1,812	3.2	2,060
Capacity	2,102	1.8	2,258
Apparent Operating Rate	86%		91%
GYPSUM LINERBOARD			
Demand for U.S. Production	1,050	1.2	1,100
Capacity	1,093	0.9	1,135
Apparent Operating Rate	96%		97%
HARD PRESSED BOARD			
Demand for U.S. Production	2,087	3.6	2,400
Capacity	2,247	2.2	2,452
Apparent Operating Rate	93%		98%
INSULATING BOARD			
Demand for U.S. Production	1,659	3.6	2,000
Capacity	1,837	3.8	2,136
Apparent Operating Rate	90%		94%

U.S EPA Headquarters Library
Mail code 3404T
1200 Pennsylvania Avenue NW
Washington, DC 20460
202-566-0556

APPENDIX B

BASE LINE ENERGY USAGE

This appendix presents energy and material balances for six major processes within the pulp and paper industry that were not included in the examples selected for detailed analysis. The six processes are as follows:

Fig. B-1 Manufacture of Kraft Liner from Virgin Fiber

Fig. B-2 Manufacture of Corrugating Medium from Virgin Fiber

Fig. B-3 Manufacture of 18-Point Clay-Coated Boxboard from Secondary Fiber

Fig. B-4 Manufacture of SBS Board from Virgin Fiber

Fig. B-5 Manufacture of Bond Paper from Virgin Fiber

Fig. B-6 Manufacture of Bond Paper from Secondary Fiber

These energy and material balances are included to permit a more comprehensive analysis of the entire industry. Although all pulping and papermaking processes have not been included, these six examples plus those discussed in the body of the report account for perhaps 80-85% of the industry's production. Figures B-1 through B-6 provide base-line information that would be useful in future EPA assessments of the impact of technological changes (i.e., changes in energy usage) that may occur in these other major manufacturing processes.

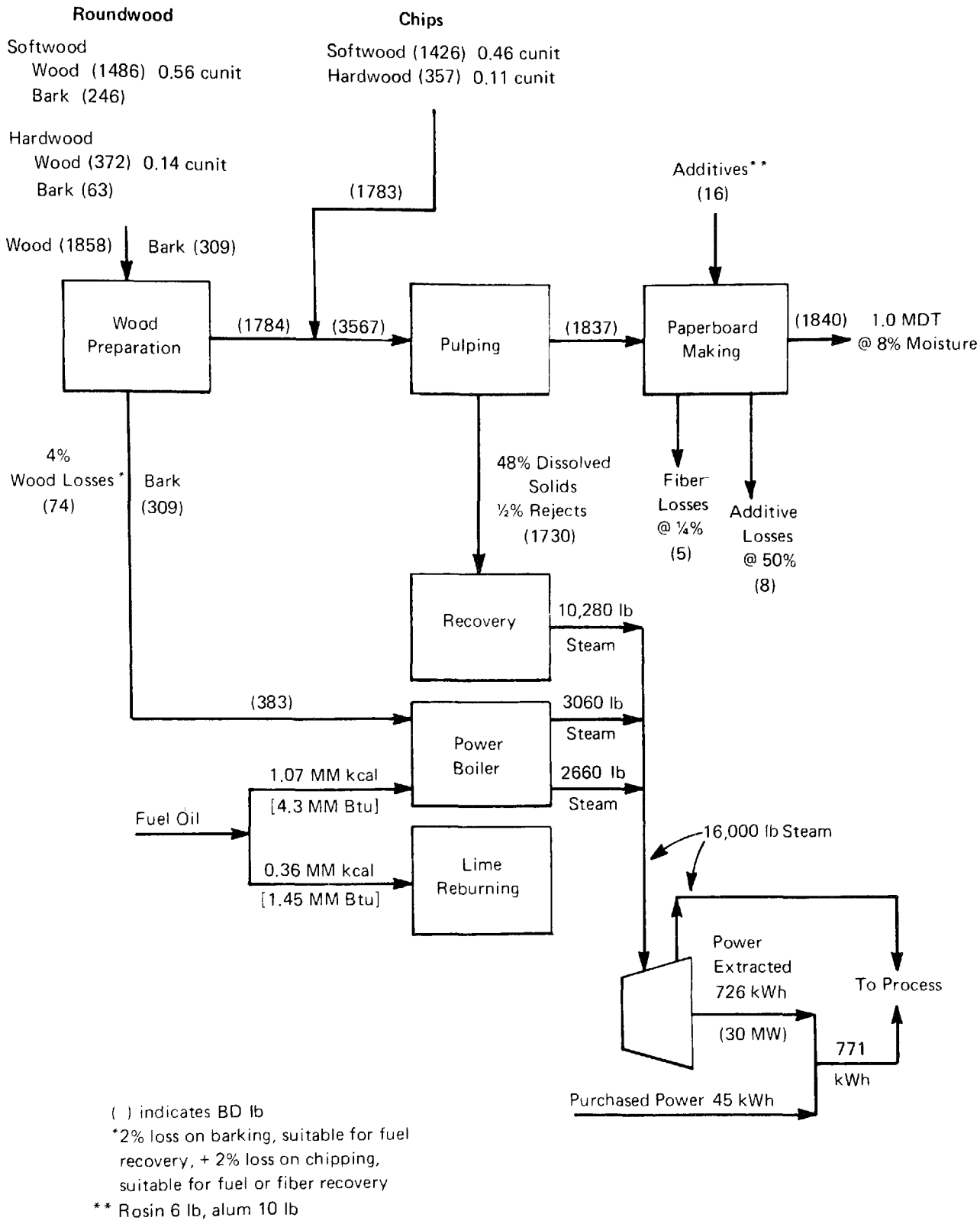

( ) indicates BD lb
*2% loss on barking, suitable for fuel recovery, + 2% loss on chipping, suitable for fuel or fiber recovery
** Rosin 6 lb, alum 10 lb

Figure B-1. Manufacture of Kraft Liner From Virgin Fiber

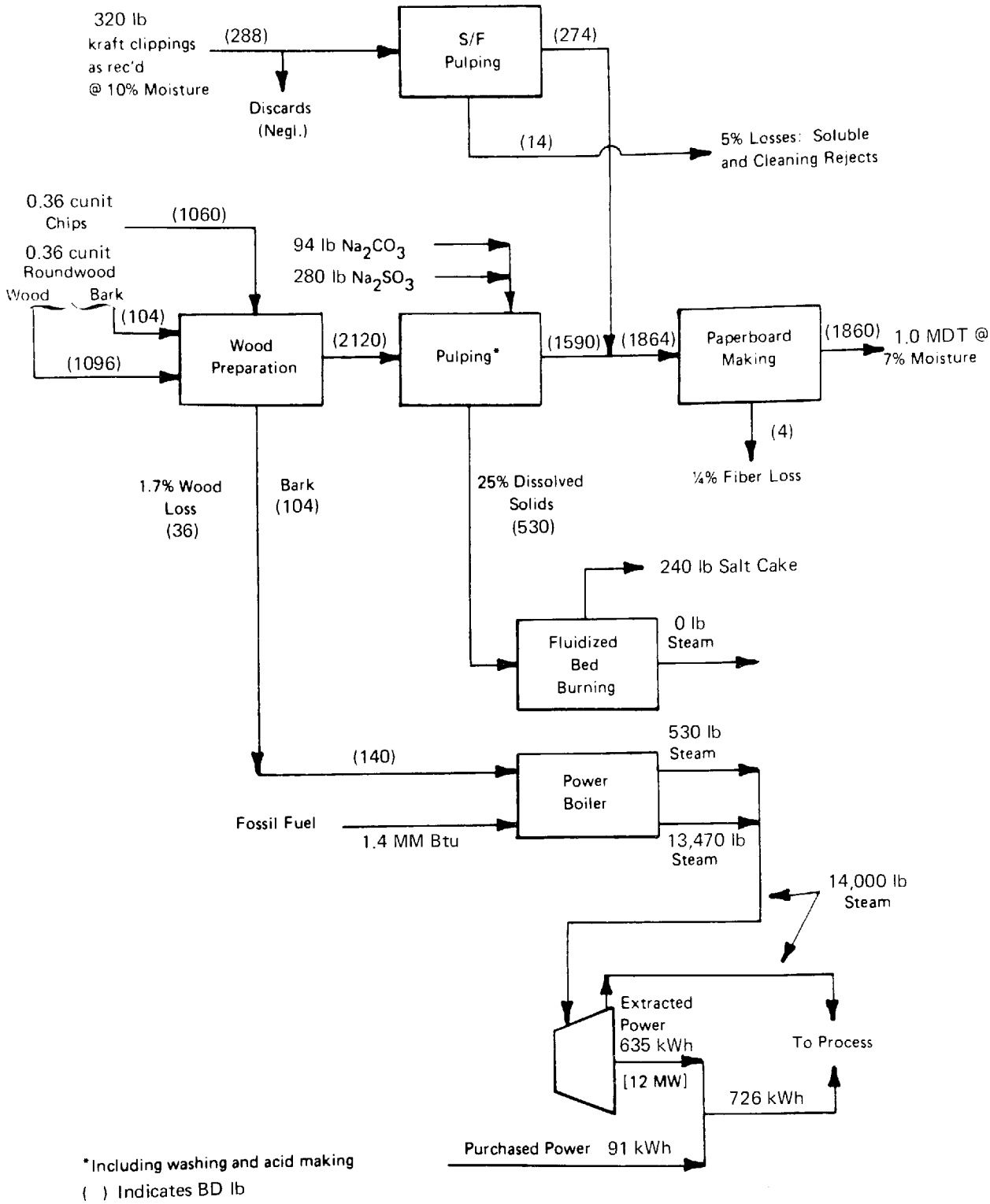

Figure B-2. Manufacture of Corrugating Medium From Kraft Liner

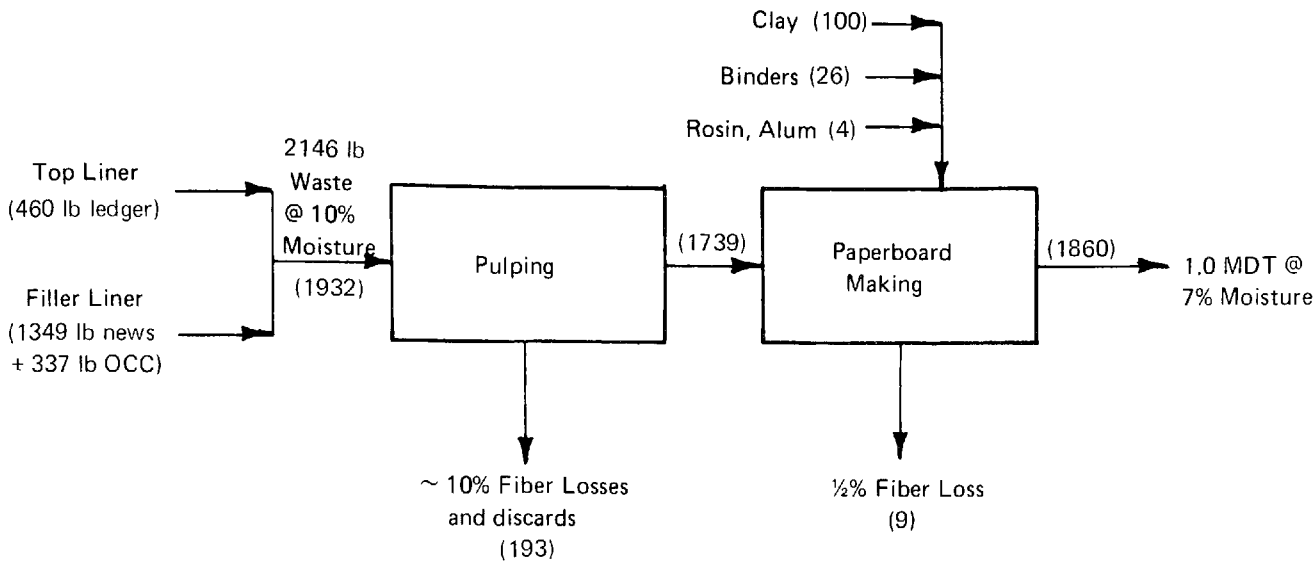

( ) Indicates BD lb

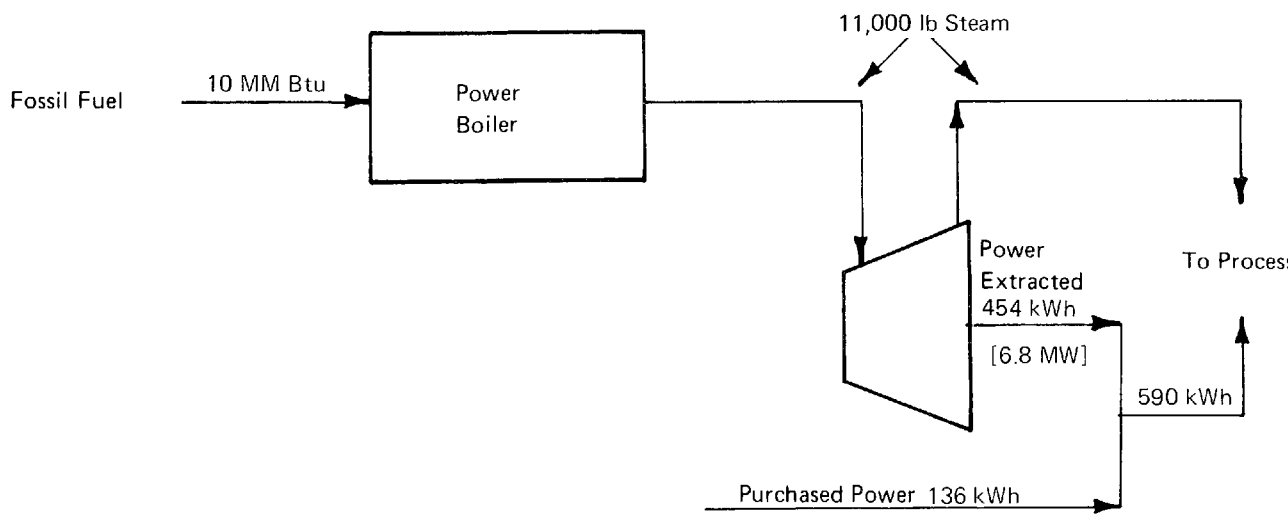

Figure B-3. Manufacture of 18-PT Clay-Coated Boxboard From Secondary Fiber

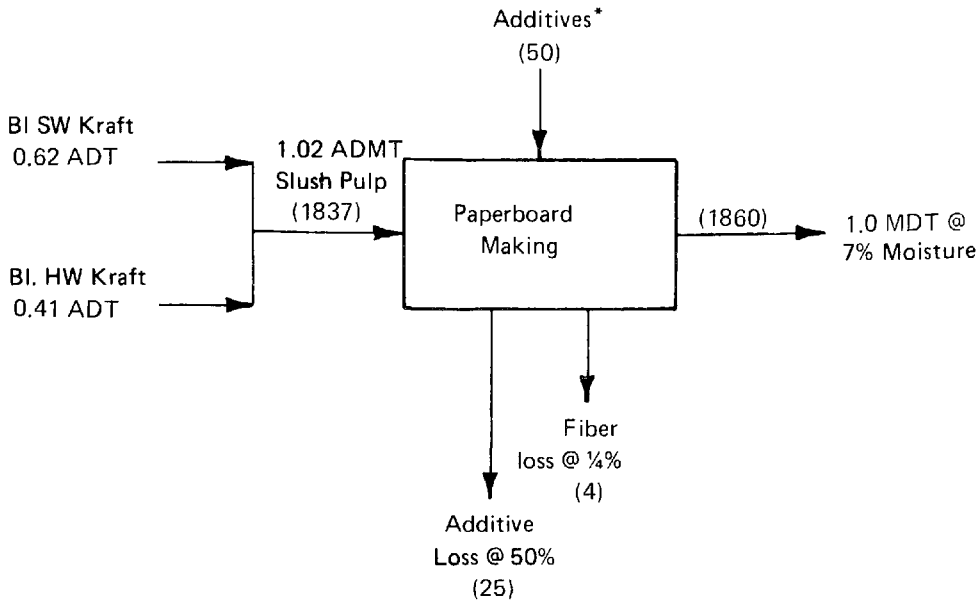

( ) Indicates BD lb

*Rosin 20 lb, alum 30 lb

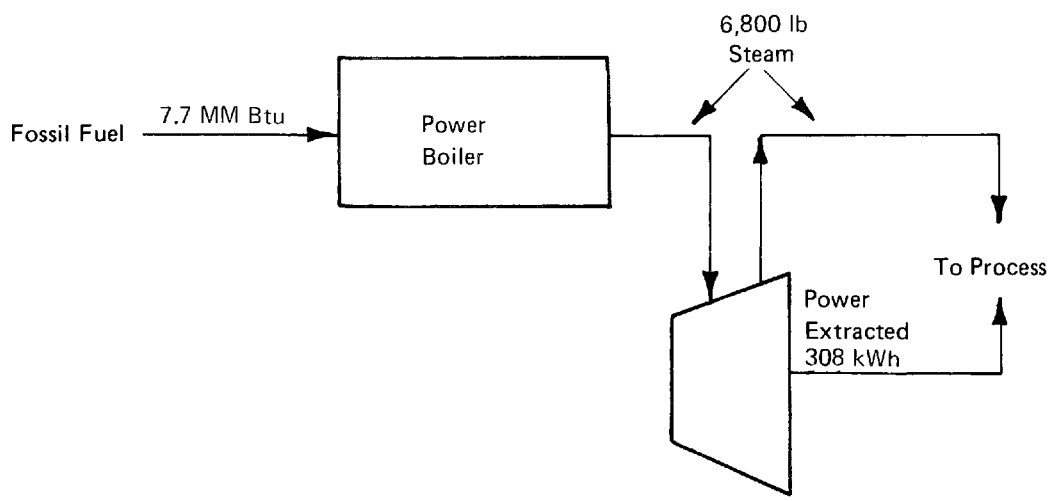

Figure B-4. Manufacture of SBS Board From Virgin Fiber

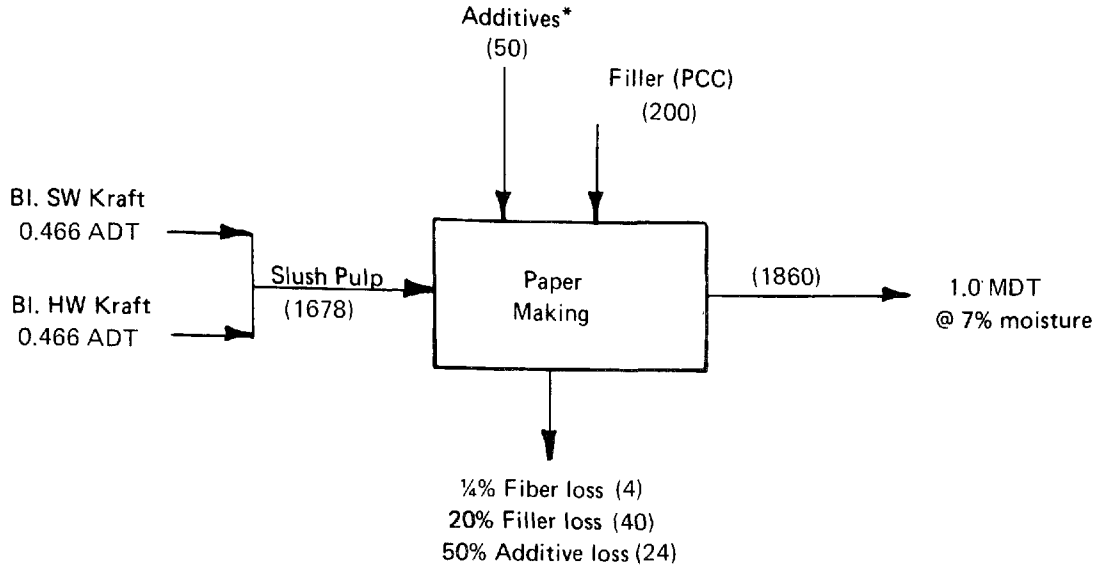

( ) Indicates BD lb
*Rosin 20 lb, alum 30 lb

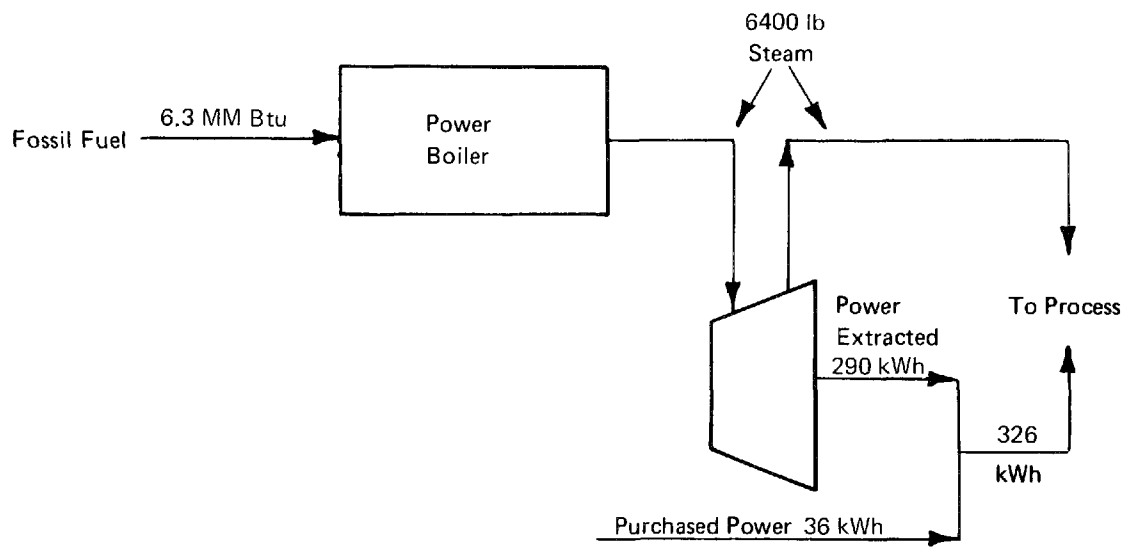

Figure B-5. Manufacture of Bond Paper From Virgin Fiber

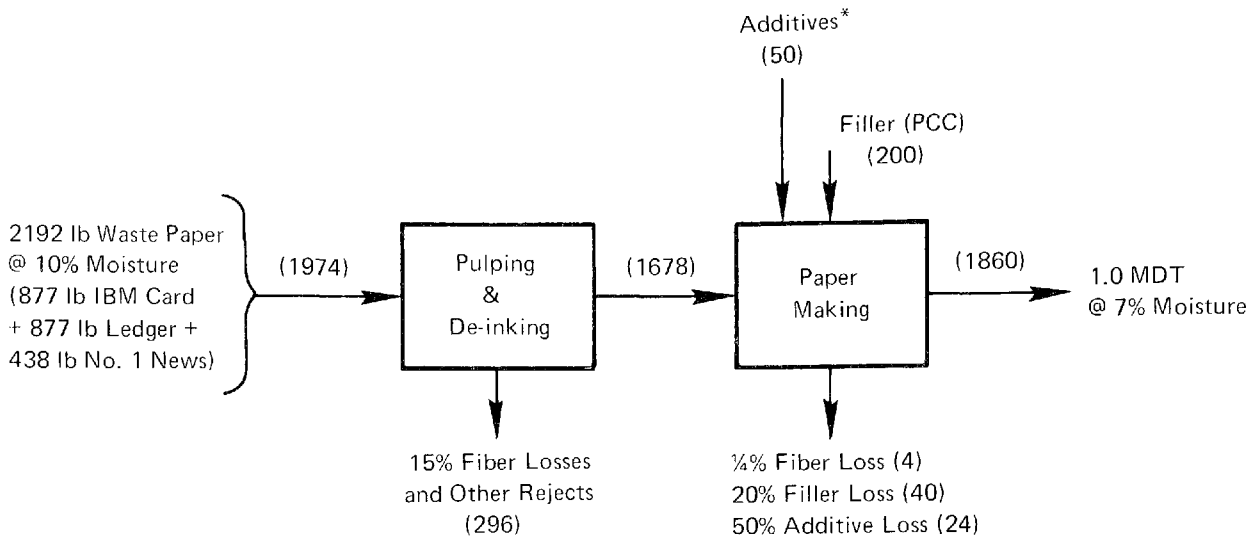

(Basis: 1 machine-dry ton of bond paper, rolls)

( ) Indicates BD lb

*Rosin 20 lb, alum 30 lb

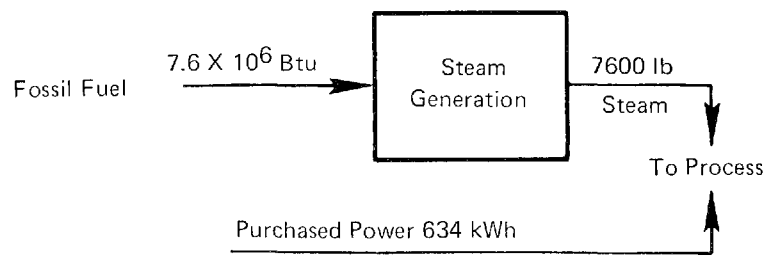

Figure B-6. Manufacture of Bond Paper From Secondary Fiber

APPENDIX C

CURRENT POLLUTION LOADS, TREATMENT TECHNOLOGY, AND COSTS TO MEET PROPOSED GUIDELINES

1. BASIS OF COST CALCULATIONS

ADL used end of second quarter 1975 as the dollar base for this report, and all costs are indicated at that level. Further, because of the uncertainty of future prices, all of the analyses are based on mid-1975 dollars without any escalation for further inflation.

The cost models have been developed for a typical scale of operation. All cost models are developed for new mill installations, typical of good technical practice in 1975. None of the models is intended to represent the cost of an actual mill.

2. WATER EFFLUENT STANDARDS AND TREATMENT TECHNOLOGY

a. Industry Categorization and Standards

Tables C-1 and C-2, and Figure C-1 outline the effluent control levels recommended in the Development Document* for new sources and for alternative treatment systems designed to meet these standards.

The standards presented are the EPA-NSPS proposed guidelines, except that we have also included color removal for bleached kraft pulp and paper products, since it is required for BAT (1983).

Costs are presented in Section 8 of the Development Document. The reader is referred to the Development Document for a detailed discussion of the estimated effluent control costs and technology; this section only highlights the key points necessary to understand the interpretation and application of the cost data.

---

*All "Development Document" references in this appendix are to Group I, Phase II, "Development Document for Advanced Notice of Proposed or Promulgated Rule Making for Effluent Limitations Guidelines and New Source Performance Standards for the Bleached Kraft, Groundwood, Sulfite, Soda, Deinked, and Nonintegrated Paper Mills Segment of the Pulp, Paper, and Paperboard Mills Point Source Category," U.S. E.P.A., August, 1975.

TABLE C-1

BATEA EFFLUENT LIMITATIONS
in kg/kkg (lb/ton)

Subcatetory	Maximum 30-Day Average		Maximum Day	
	BOD5	TSS	BOD 5	TSS
Dissolving Kraft	5.45 (10.9)	3.45 (6.9)	11.25 (22.5)	7.6 (15.2)
Market Kraft	3.35 (6.7)	2.25 (4.5)	6.9 (13.8)	4.95 (9.9)
BCT Kraft	2.85 (5.7)	1.85 (3.7)	5.9 (11.8)	4.05 (8.1)
Fine Kraft	1.9 (3.8)	1.55 (3.1)	4.0 (8.0)	3.35 (6.7)
Papergrade Sulfite	6.45 (12.9)	3.15 (6.3)	13.3 (26.6)	6.9 (13.8)
Dissolving Sulfite	8.35 (16.7)	4.05 (8.1)	17.3 (34.6)	8.85 (17.7)
GW-Chemi-Mechanical	1.25 (2.5)	1.2 (2.4)	2.6 (5.2)	2.65 (5.3)
GW-Thermo-Mechanical	1.1 (2.2)	0.65 (1.3)	2.25 (4.5)	1.4 (2.8)
GW-CMN Papers	1.75 (3.5)	1.3 (2.6)	3.65 (7.3)	2.8 (5.6)
GW-Fine Papers	1.65 (3.3)	1.2 (2.4)	3.45 (6.9)	1.0 (2.0)
Soda	2.4 (4.8)	1.55 (3.1)	5.0 (10.0)	3.35 (6.7)
Deink	2.5 (5.0)	2.4 (4.8)	5.2 (10.4)	5.3 (10.6)
NI Fine Papers	1.25 (2.5)	0.65 (1.3)	2.6 (5.2)	1.4 (2.8)
NI Tissue Papers	2.0 (4.0)	0.95 (1.9)	4.15 (8.3)	2.1 (4.2)
NI Tissue (FWP)	2.0 (4.0)	0.95 (1.9)	4.15 (8.3)	2.1 (4.2)

pH for all subcategories shall not exceed 6.0 to 9.0

Color

Subcategory	Maximum 30-Day Average kg/kkg (lb/ton)	Maximum Day kg/kkg (lb/ton)
Dissolving Kraft	125 (250)	250 (500)
Market Kraft	95.0 (190)	190 (380)
BCT Kraft	65.0 (130)	130 (260)
Fine Kraft	65.0 (130)	130 (260)
Soda	65.0 (130)	130 (260)

Zinc

Subcategory	Maximum 30-Day Average kg/kkg (lb/ton)	Maximum Day kg/kkg (lb/ton)
GW: Chemical-mechanical	0.115 (0.23)	0.23 (0.46)
GW: Thermo-mechanical	0.065 (0.13)	0.13 (0.26)
GW: CMN Papers	0.120 (0.24)	0.24 (0.48)
GW: Fine Papers	0.115 (0.23)	0.23 (0.46)

Source: Development Document

TABLE C-2

IDENTIFICATION OF INTERNAL TECHNOLOGY ITEMS

Item No.	Description
1	Replace Flume with mechanical conveyor.
2	Use of steam in drum barkers.
3	Knots collection and disposal.
4	Fourth stage brown stock washer.
5	Decker filtrate for brown stock washer showers.
6	Close-up screen room.
7	Pulp mill spill collection from washers.
8	Pulp mill spill collection from tanks, equipment and drains.
9	Jump stage countercurrent washing.
10	Evaporator surface condenser.
11	Steam stripping condensates and reuse.
12	Evaporator boilout tank.
13	Black liquor storage tank spill collection.
14	Green liquor dregs filtering.
15	Causticizing area spill collection system.
16	Evaporator condensate for causticizing makeup.
17	Lime mud storage pond.
18	Alarms on chemical tanks.
19	Prehydrolysate disposal by burning.
20	MgO recovery system.
21	Paper machine vacuum saveall.
22	Paper machine flotation saveall.
23	Paper machine high pressure showers.
24	Paper machine white water showers.
25	Cylinder former white water showers.
26	Cooling water segregation and reuse.
27	Felt hair removal.
28	Vacuum pumps seal water reuse.
29	Paper mill stock spill collection system.

Source: Development Document

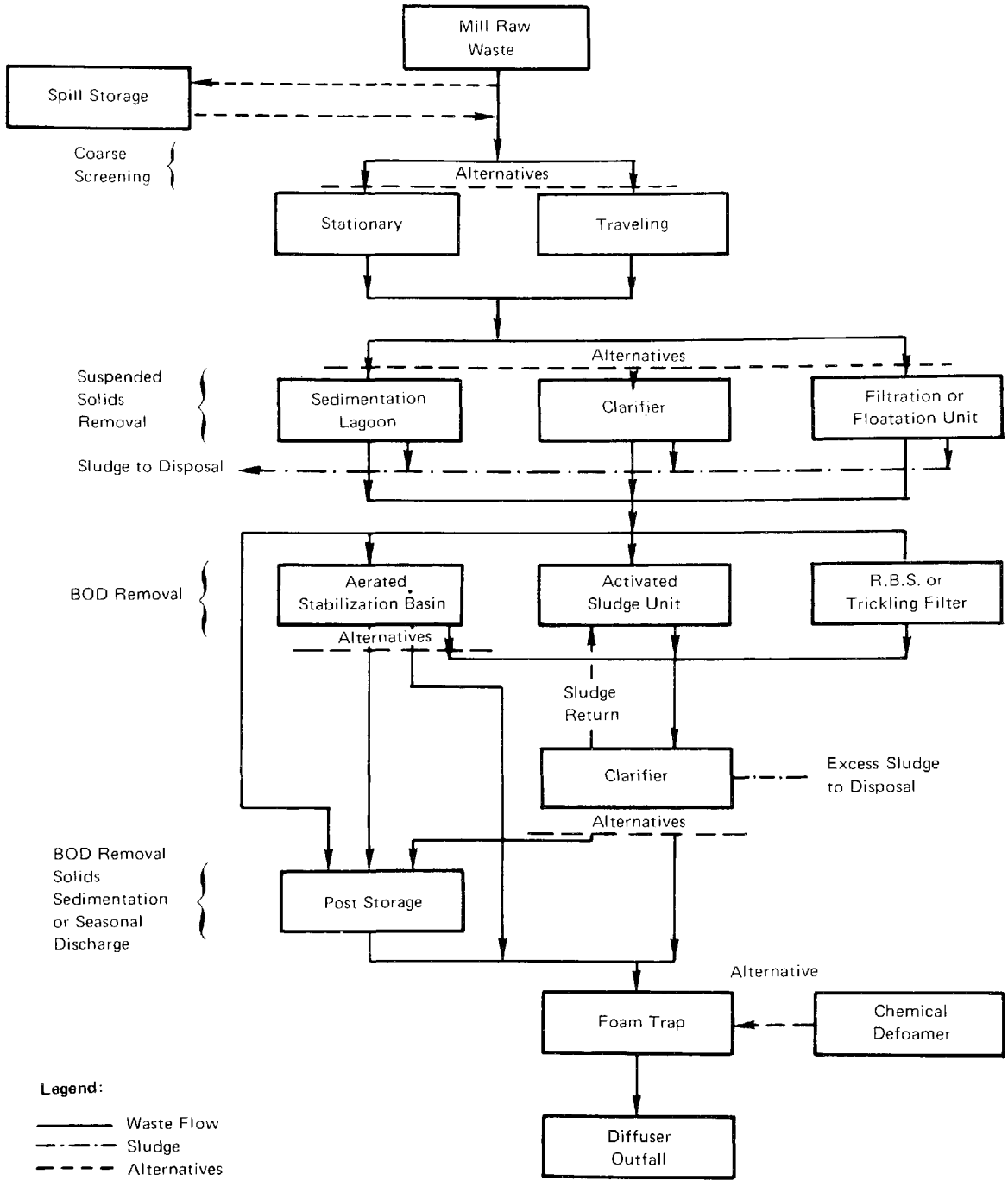

Source: Development Document.

Figure C-1. Alternative Treatment Systems

Various pulping and nonintegrated papermaking process categories were defined in the Development Document to characterize the entire U.S. pulp and paper industry. In some instances (e.g., bleached kraft) the categories were further divided into appropriate sub-categories. Typical small, medium, and large plant sizes were selected within each sub-category to indicate the effect of scale of operations on the effluent control cost estimates. Thus, a range of hypothetical models was obtained which represents typical sizes of "pure" pulping or papermaking processes.

b. Treatment Technology

An engineering approach was used in the Development Document to specify effluent control treatment technology to be used in estimating costs. Both internal (process modification) and external "end of pipe" control measures were used. A generalized flow diagram for external treatment alternatives, reproduced from the Development Document, is shown in Figure C-1. A list of the applicable internal control measures is shown on page 376 of the Development Document and is reproduced as Table C-2.

Typical effluent loadings were specified for each process sub-category, including total flow, TSS (total suspended solids), and BOD_5 (five-day biochemical oxygen demand). A treatment train was then specified for each sub-category to meet the proposed standards.

Each item in the treatment train was sized according to plant size, hydraulic load, BOD and TSS reduction requirements, etc. The technologies chosen and the design parameters used are typical of those that would be expected in the pulp and paper industry. Thus, the treatment technologies are reasonable for the conditions specified for each sub-category model. Day-to-day variations in effluent from typical mills are discussed in the Development Document, beginning on page 246. This daily variability has been accounted for by the application of daily peaking factors to both the design effluent loading and to the allowable daily average effluent limitations relative to 30-day averages.

Mill-to-mill variations from the specified typical technology can be largely due to factors unique to each mill. Sources of variability are noted in this section of the report, but we have not attempted to assess any variations quantitatively.

c. Cost of Effluent Control

The general methodology used for estimating capital and operating costs for the treatment technology specified is contained in Section VIII of the Development Document. A discussion is included for each item of internal treatment technology. Internal treatment items are primarily process modifications which often result in cost savings through economies in materials and/or energy.

Therefore, it is difficult to make an exact determination as to whether any particular item is mainly a process improvement or an effluent control step. In the Development Document it was assumed that the capital cost for all items listed as internal control technology is charged to effluent control, but that operation and maintenance charges are offset by material and energy savings. Thus, there are no operation and maintenance charges to effluent control for internal control technology. The one exception to this assumption is for sulfite liquor incineration and recovery included in the MgO recovery process (Table C-2, Item 20).

The cost estimates for external treatment are described in the Development Document, starting on p. 465. The key assumptions are described as follows:

> "Cost curves have been developed for each treatment technology outlined in this report. The cost curves and resultant unit costs are based on 'model' effluent treatment facilities sized for several flow capacities. These 'model' effluent treatment facilities are based on assumed unit processes, yard piping layouts, methods and materials of construction, site and soil characteristics, unit construction costs, and operational practices. Detailed design for each unit, process, and mechanical layout is beyond the scope and time limitations of this report."

> "The construction costs presented are those defined as the capital expenditures required to implement the control technology. Included in these costs are the traditional expenditures for such items as mechanical and electrical equipment, instrumentation, yard and process piping, earth-work, unit construction, site preparation and grading, equipment installation and testing, and engineering. Items such as electricals, instrumentation, process piping, site preparation, and engineering are included as a percentage of the base capital costs, which varies for each applicable control technology. A 15 percent contingency is also included with each control technology to cover miscellaneous work items not included in the estimates."

Note that the cost of land is <u>not</u> included in the estimates.

Costs have been estimated separately for treatment trains using an aerated stabilization basin (ASB) or activated sludge for biological treatment. It is anticipated that some mills may desire or need activated sludge for increased efficiency during cold weather or because of limited land availability for ASB construction. While activated sludge is typically the more costly of these two options, the exact relationship would be different if the cost or value of land were included in the estimates.

Land requirements for various treatment technologies are indicated on page 536 of the Development Document. These requirements are based on sludge disposal to an on-site lagoon for BPT, and dewatering and offsite landfill disposal for BAT. In either case, the cost of land for a lagoon or disposal site is not included.

ADL has not attempted to estimate what the cost of land might be, whether actually purchased or only transferred from company holdings, nor made any quantitative evaluation of the implication of omitting land costs. This cost is only noted as a possible source of variability in the cost estimates.

Operating costs are discussed on page 467 of the Development Document. Annual operating costs are presented in three categories: (1) Total operating costs, (2) Depreciation and interests, and (3) Operation and Maintenance. Operation and maintenance "are the sum of the annual costs for operating labor, maintenance labor, energy requirements, and chemicals." (Development Document, p. 467) Note that the cost of maintenance materials is <u>not</u> included.

The following comments on cost variability are quoted from the Development Document:

> "It should be recognized that actual treatment costs vary widely from mill to mill, depending upon the design and operation of the production facilities and local conditions. Furthermore, effluent treatment costs reported by the industry vary greatly from one installation to another depending upon bookkeeping procedures. The estimates of effluent volumes and treatment methods described in this section are intended to represent those of the sub-categories covered by this report. However, the industry is extremely heterogeneous in that almost every installation has some uniqueness which could be of importance in assessing effluent treatment problems and their associated costs." (p. 373)

> "It should be remembered that actual external treatment costs may vary significantly from mill to mill, depending upon the climate, topography, soil conditions, unit locations, and the design and operation of the particular waste treatment facility." (p. 465)

The cost estimates we have used for water effluent control are basically those presented for NSPS, with adjustments as noted in the following section. As mentioned previously, we have added the cost of color removal to the kraft pulping estimates. Color removal was estimated as the difference between cost of compliance for BAT (1983) guidelines versus NSPS guidelines. While this results in an estimated cost of bleached kraft pulp color removal which is substantially higher than estimates from other

sources, we have used this estimate for the sake of data consistency; that is, the Development Document remains the source of all effluent control cost data. Since the absolute level of pollution control cost is a controversial and imprecise issue, we have not evaluated the accuracy of the Development Document cost estimates, but have used them as a recognized and accepted data source.

The cost data contained in the Development Document could not be used "as is" because they were based upon:

- 1974 dollars
- Year-end 1973 level of compliance
- Incomplete pollution control operating costs

It was therefore necessary to modify the costs in the Development Document to reflect mid-1975 dollars and incorporate the additional items.

Process economic cost estimates of the cost of construction and operating costs of new mills were necessary for economic comparisons.

A unit process basis was used in the development of all cost estimates. The Development Document defined major pulping and papermaking process categories and, in some instances, appropriate sub-categories. Typical or average mill sizes were specified within each sub-category for both existing and new mills. In general, small, medium, and large sizes were specified for existing mills, with new capacity at the medium and large sizes only. The result is an array of unit process models which can be used to characterize the entire pulp and paper industry, both as it exists and as new capacity is added.

The Development Document specified effluent loads for each sub-category, independent of mill size. Effluent treatment control levels were specified for each sub-category, also independent of mill size, for three levels of control: Best Practical Control Technology Currently Available (BPT, proposed for 1977), Best Available Technology Economically Achievable (BAT, proposed for 1983), and New Source Performance Standards (NSPS, proposed for all new capacity which comes on line after acceptance of the guidelines). Unit process control technology was specified for each sub-category and mill size model. The specified technology included both internal process controls and modifications, and external (end-of-pipe) treatement. Specification of technology included the individual items in each treatment train (internal and external) as well as the parameters for sizing each item. The capital and annual operating costs for each unit process treatment train were estimated in the Development Document. ADL made minor additions to the operating costs in the Development Document and updated all capital and operating cost estimates to mid-1975 dollars.

The cost estimates published in the Development Document are expressed in second-quarter 1974 dollars. To adjust these to mid-1975 dollars, ADL increased both investment and operating costs by 20%. The increase in investment is significantly higher than that reported in typical engineering cost indices, but specific information on cost increases in the pulp and paper industry* indicates that the value ADL used is more appropriate. ADL believes that this would also apply to pollution control equipment at paper mill sites, particularly new mill installations. The increase in operating costs is a weighted average of the estimated increases in individual cost items ranging from 10% on labor to 60% on chemicals.

In addition to revising the Development Document cost data for inflation, ADL has added the following operating cost items, which were excluded from the Development Document but which ADL believes are legitimate effluent control operating charges:

- Factory overhead and general administration at 12% of the estimated direct labor costs for pollution abatement. The Development Document operating costs include overhead for direct labor supervision only.

- Professional administration for monitoring and reporting, including relations with regulatory agencies. This is estimated as an essentially fixed cost at $23,000 per installation, regardless of size or category. The Development Document estimates include the direct costs of measuring, sampling, analysis, and compilation of data.

- Insurance and local property taxes at 1-1/4% of total investment. This is somewhat lower than typical of pulp and paper facilities, and reflects the probability that some level of local property-tax relief will be allowed for effluent control installations and process modifications. Taxes and insurance are not included in Development Document estimates.

- Maintenance materials at 1% of total investment, which are not included in the Development Document.

ADL has not attempted to adjust the Development Document figures to include the cost of land, since this is such a highly variable cost item.

These refinements did not affect the estimated total capital costs and added about 5% to the Development Document annual operating costs.

For virgin fiber pulping, ADL has used a relatively large capacity, one that is considered economical by 1974 standards but not the largest possible. For papermaking operations integrated to virgin pulping, ADL

---

*In-house information on recent construction projects.

selected the largest practical size for a single machine, as this is typical of current installations. For nonintegrated secondary fiber operation, a single machine capacity lower than the largest practical was selected; this is representative of the existing industry, since the economic availability of secondary fiber rather than machine size alone is the limiting factor in plant capacity.

Mill capacity was defined on a daily tonnage basis, and annual capacity as daily capacity multiplied by net operating days per year. The latter are total days of actual mill operation per year after subtracting scheduled down-time for holidays and estimated maintenance shutdowns, giving a net on-stream time of 354 days per year. Seven total paid holidays were allowed, and it was assumed that the mill would operate on three of them. On the 354 on-stream days, it was estimated that commodity grades (newsprint, board products, corrugating medium, and market pulp) would have a total productive operation of 340 to 345 days. For noncommodity grades, ADL estimated 330 productive days to reflect more frequent clean-up and grade changes.

Plant size selections have been consistent with existing paper industry patterns. For products where a number of geographic areas could be considered typical, ADL concentrated the models in one area to emphasize fiber furnish and product grade as the primary variables in deriving cost and profitability estimates.

3. AIR EMISSIONS STANDARDS AND TREATMENT TECHNOLOGY

Capital and operating costs to meet Federal Air Control Regulations (kraft mill TRS and particulate limits, power boiler particulate limits) were estimated separately and added to the base-level manufacturing cost.

a. Emissions Standards

(1) Cost Models for Air Pollution Control in the Kraft Mills

Particulate emissions from the kraft process occur primarily from the recovery furnace, the lime kiln, and the smelt dissolving tank. These emissions consist mainly of sodium salts but include some calcium salts from the lime kiln. They are caused primarily by the carry-over of solids plus sublimation and condensation of the inorganic chemicals.

The characteristic odor of the kraft mill is caused in large part by the emission of hydrogen sulfide. The major source is the direct-contact evaporator, in which the sodium sulfide in the black liquor reacts with the carbon dioxide in the furnace exhaust. The lime kiln can also be a potential source, as a similar reaction occurs involving residual sodium sulfide in the lime mud. Lesser amounts of hydrogen sulfide are emitted with the noncondensible off-gases from the digesters and multiple-effect evaporators.

The kraft process odor also results from an assortment of organic sulfur compounds, all of which have extremely low odor thresholds. Methyl mercaptan and dimethyl sulfide are formed in reactions with the lignin in wood. Dimethyl disulfide is formed through the oxidation of mercaptan groups derived from the lignin. These compounds are emitted from many points within a mill; however, the main sources are the digester/blow tank systems and the direct-contact evaporator.

(2) Air Pollution Control Standards

Under the Clean Air Act, as amended in 1970, air quality standards have been established for the whole country. Each state is required to adopt and to submit implementation plans to the Administrator of the Environmental Protection Agency for its emission reduction strategy and enforcement thereof to achieve national standards for particulates, sulfur oxides, nitrogen oxides, hydrocarbons, and carbon monoxide.

The concentration of kraft pulp mills is high in Alabama, Florida, Georgia, Maine, Oregon, and Wisconsin. The air pollution control standards for kraft pulp mills in the above states are given in Table C-3.

The EPA is planning to establish air pollution control standards for the new kraft pulp mills. These standards (see Table C-4) are presently at the proposed stage and are likely to be approved in the future, perhaps with some modifications.

The EPA has established air pollution control standards for the new steam generating boilers. These standards (Table C-5) limit the emissions of particulates, sulfur dioxide, and nitrogen oxides. The standards for steam generating boilers are applicable to the power boilers in the kraft pulp industry, as well as other power boilers that fall in the classification of 250 million Btu/hr capacity.

The federal standards are generally more stringent than the state standards for kraft pulp mills. Thus, the federal standards will be applicable to new kraft mills and the state standards will be applicable to the existing kraft mills.

b. Control Technology and Costs

The capital cost and annual operating cost for the control devices necessary to meet the standards are discussed in the following paragraphs. The estimated emission loads from chemical pulp sources are shown in Table C-6.

The cost to achieve various levels of control is presented for each of the affected facilities for three sizes of kraft mills: 500, 1000, and 1500 tons per day of air-dried pulp. The credit represents the value of recovered material.

The dollar values used in this report are June 1975 dollars.

TABLE C-3

STATE STANDARDS FOR EMISSIONS FROM PULP MILLS

	Kraft[a]			Sulfite[a]		
	Particulate	SO_2	TRS	Particulate	SO_2	TRS
Oregon					20*	
Recovery Boiler	4	300	(15, 0.45*)[b,c]	4	800	
Lime Kiln	1		(40, 0.2*)[b,d]			
Noncondensible			e			
Stripping			f			
Smelt Tank	0.5					
Blow System					0.2[g]	
Alabama						
Recovery Boiler	4		1.2*,[h]			
Smelt Tank	0.5					
Lime Kiln	1					
Florida	40*			40*		
Recovery Furnace	3[i]		17.5[h]			
Georgia						
Maine						
Recovery Boiler	4				40*	
Smelt Tank	0.5					
Lime Kiln	1					
Wisconsin						
Recovery Boiler			(17.5, 0.5*)[h]			

NOTES

a - The following units are used:
Particulate: lb/ton of unbleached air-dried pulp or opacity (denoted by asterisk)
SO_2: lb/ton of unbleached air-dried pulp (denoted by asterisk) or ppm (dry basis)
TRS: lb/ton of unbleached air-dried pulp (denoted by asterisk) or ppm (dry basis)
b - The quantity shown is lb sulfur/ton of unbleached air-dried pulp
c - Starting July 1, 1978 (10, 0.3*)[b]
d - Starting July 1, 1978 (20, 0.1*)[b]
e - Noncondensibles from digester and multiple-effect evaporator to be burned in lime kiln
f - Steam or air stripping to be burned in lime kiln
g - lb/min/ton of unbleached pulp charged to digester
h - Expressed as H_2S (total TRS only)
i - Lbs per each 3,000 lbs black liquor solids fed to furnace
j - ppm
Source: Development Document

TABLE C-4

SUMMARY OF PROPOSED STANDARDS AND MONITORING REQUIREMENTS

	Total Reduced Sulfur			Particulate Matter						
	ppm[a]	lb/T ADP	g/kg ADP	gr/d cf	g/dscm	lb/T ADP	g/kg ADP	Opacity	Monitoring Requirements	Comments
Recovery Furnace System	5[b]	0.15	0.075	0.044	0.1[b]	2.0	1.0	15	Opacity, TRS, & O_2	Particulate & TRS corrected to 8% O_2.
Lime Kiln	5[b]	0.025	0.0125	0.067 gas 0.13 oil	0.15[b] gas 0.30[b] oil	0.55 1.07	0.0275 0.536	None None	TRS & O_2 TRS & O_2	Particulate & TRS corrected to 10% O_2. Particulate & TRS corrected to 10% O_2.
Smelt Tank	5	0.025	0.0125[b]	0.052	0.119	0.3	0.15[b]	None		Fresh water will insure compliance.
Brown Stock Washer System	5[b]	0.01	0.005	N.S.[d] →					TRS[c] or Temperature	Likely to be utilized as combustion air in the recovery furnace.
Black Liquor Oxidation System	5[b]	0.01	0.005	N.S. →					TRS[c] or Temperature	Likely to be utilized as combustion air in the recovery furnace.
Condensate Stripping System	5[b]	0.01	0.005	N.S. →					TRS[c] or Temperature	Likely to be oxidized in the lime kiln.
Digester System	5[b]	0.01	0.005	N.S. →					TRS[c] or Temperature	Likely to be oxidized in the lime kiln.
Multiple-Effect Evaporator System	5[b]	0.01	0.005	N.S. →					TRS[c] or Temperature	Likely to be oxidized in the lime kiln.

[a] By volume, dry basis, 4 hr average

[b] Indicates units of recommended standard

[c] In most instances monitoring will not be required since these sources will be oxidized in the lime kiln or recovery furnace. If they are oxidized in separate incineration or power boilers, only the temperature and oxygen content will be monitored.

[d] No standard

Source: Development Document

TABLE C-5

STANDARDS OF PERFORMANCE FOR NEW STEAM GENERATORS HAVING CAPACITY GREATER THAN 250 MILLION BTU/HR

Particulate - 0.18 g/10^6 cal (0.1 lb/10^6 Btu)

- Opacity less than 20%

SO_2 - 1.4 g/10^6 cal (0.8 lb/10^6 Btu) for liquid fuel

- 2.2 g/10^6 cal (1.2 lb/10^6 Btu) for solid fuel

NO_x - 0.36 g/10^6 cal (0.2 lb/10^6 Btu) for gaseous fuel

0.54 g/10^6 cal (0.3 lb/10^6 Btu) for liquid fuel

- 1.26 g/10^6 cal (0.7 lb/10^6 Btu) for solid fuels except lignite

} Measured as NO_2

Source: Development Document

TABLE C-6

AIR EMISSIONS LOADS FOR KRAFT (STANDARD AND RAPSON) AND ALKALINE-OXYGEN PULPING - NEW MILL BASIS

	Kraft Pulping			Alkaline-Oxygen Pulping		
	Flow (10^3 SCF/T)	Particulate (lb/T)	TRS (lb/T)	Flow (10^3 SCF/T)	Particulate (lb/T)	TRS (lb/T)
Brown Stock Washing	180	-	1.0	166	-	-
Bleaching	-	Neg.	Neg.	-	Neg.	-
Recovery Boiler	460	130	15	391	110	-
Smelt Tank	0.48	5	0.1	0.2	2	-
Power Boiler	180	18	0	153	15	-
Lime Kiln	46	45	Trace	19	19	-
Digester and Seal Tank	0.40	0	8	0.4	0	-
Lime Slaker	0.01	0	0	0.01	0	-
TOTAL	870	200	24	730	146	0
Pulping	180	0	9	166	0	0
Recovery	690	200	15	564	146	0

SOURCE: Arthur D. Little, Inc., estimates.

(1) Recovery Boiler

There are two types of recovery boilers: conventional and noncontact. The conventional recovery furnace system employs a direct-contact evaporator that uses the hot flue gas from the furnace to evaporate water from the black liquor feed to the furnace. The direct-contact evaporator removes some of the particulates from the flue gas. In addition, the physical properties of the particulates are somewhat different from the noncontact furnace case. As a result, a larger (and more expensive) electrostatic precipitator is needed on the noncontact furnace to achieve the same exit particulate concentration.

Capital costs, annual costs, and credits for recovered particulates are shown in Table C-7 for three different cases: (1) economic recovery, (2) particulate emission control to meet state standards, and (3) particulate emission control to meet federal standards.

Since the particulates (mainly salt cake) are valuable, it is economical to recover at least a portion of them. Beyond that level, the value recovered is not enough to justify the additional investment; that is, the incremental return on the incremental investment drops below the acceptable level for that company. Although this break-point varies, an economic recovery level of about 97.5%* control efficiency is used here. The figure is based on a survey of existing control devices on recovery furnaces.

The capital cost of the ESP is based upon recent quotations and the cost information given in the IGCI report.**

The credit for the recovered particulate is calculated on the assumption that all the particulate is salt cake with a value of $35/ton. The air pollution control cost is actually the incremental cost of the particular device over that used for economic recovery. The incremental capital cost, the incremental annual operating cost, and the incremental operating cost per ton of pulp are given in Table C-7.

TRS emissions from conventional recovery furnaces are reduced by (1) close monitoring and control of the process variables and (2) oxidizing the black liquor to eliminate the compounds that cause TRS emissions when the black liquor contacts the furnace flue gas in the direct-contact evaporator. No costs are assessed to the closer control of the process variables.

---

*"Particulate Matter Reduction Trends in the Kraft Industry," Technical Bulletin No. 32, National Council of Pulp and Paper Industry for Air and Stream Improvement, Inc., April 4, 1967.

**"Air Pollution Control Technology and Costs in Eight Selected Industries," Industrial Gas Cleaning Institute, EPA Contract No. 68-02-1091, draft report, 1974.

TABLE C-7

CONTROL COSTS FOR RECOVERY BOILERS

	Mill Size (tons per day)		
	500	1,000	1,500
Economic Recovery Conventional Boiler ESP (97.5%)			
Capital Cost, $	1,836,000	2,783,000	3,550,000
Gross Annual Cost, $	459,000	696,000	888,000
Credits, $/yr	(612,000)	(1,225,000)	(1,835,000)
Noncontact Boiler ESP (97.5%)			
Capital Cost, $	2,720,000	4,122,000	5,258,000
Gross Annual Cost, $	571,000	866,000	1,104,000
Credits, $/yr	(1,198,000)	(2,397,000)	(3,595,000)
Compliance with State Standards Existing Conventional Boiler ESP (99%)			
Capital Cost, $	2,040,000	3,092,000	3,944,000
Gross Annual Cost, $	510,000	773,000	986,000
Credits, $/yr	(623,000)	(1,246,000)	(1,868,000)
Incremental Capital Cost, $	204,000	309,000	394,000
Incremental Operating Cost, $/yr	40,000	56,000	65,000
$/ton	0.246	0.172	0.133
Existing Noncontact Boiler ESP (99%)			
Capital Cost, $	3,022,000	4,580,000	5,842,000
Gross Annual Cost, $	635,000	962,000	1,227,000
Credits, $/yr	(1,216,000)	(2,434,000)	(3,649,000)
Incremental Capital Cost, $	302,000	458,000	584,000
Incremental Operating Cost, $/yr	46,000	59,000	69,000
$/ton	0.283	0.182	0.142
Compliance with Federal Standards New Noncontact Boiler ESP (99.7%)			
Capital Cost, $	3,400,000	5,153,000	6,573,000
Gross Annual Cost, $	714,000	1,082,000	1,380,000
Credits, $/yr	(1,225,000)	(2,451,000)	(3,676,000)
Incremental Capital Cost, $	680,000	1,031,000	1,315,000
Incremental Operating Cost, $/yr	116,000	162,000	195,000
$/ton	0.714	0.498	0.400

TABLE C-7 (cont'd)

CONTROL COSTS FOR RECOVERY BOILERS

	Mill Size (tons per day)		
	500	1,000	1,500
New Conventional Boiler ESP (99.5%)			
Capital Cost, $	2,448,000	3,710,000	4,733,000
Gross Annual Cost, $	563,000	853,000	1,089,000
Credits, $/yr	(621,000)	(1,243,000)	(1,864,000)
Incremental Capital Cost, $	612,000	927,000	1,183,000
Incremental Operating Cost, $/yr	95,000	139,000	172,000
$/ton	0.585	0.428	0.353

Basis: $35/ton is used for recovered chemicals. The ESP cost estimates are based on recent quotations.

The economic recovery level of 97.5% and the weight of the recovered materials were obtained from EPA Air Regulation, 1974.

Source: Arthur D. Little, Inc. estimates

The control technique for reducing TRS emissions is the basic design of the noncontact furnace system. The direct-contact evaporator is not used in the noncontact furnace. Several methods are used to accomplish the function previously performed by the direct-contact evaporator, such as enlarging the economizer section to recover more heat from the flue gas, adding a steam-heated concentrator to evaporate water from the black liquor, or using combustion air heated by the furnace flue gas to evaporate water from the black liquor in an air-contact evaporator. In general, the heat from the noncontact furnace flue gases is less than that recovered from conventional furnace flue gases. The odor control cost is the cost of the incremental loss of heat energy in the flue gas and the incremental operating cost of the noncontact furnace over the operating cost of the conventional furnace. These costs are not included in Table C-7.

(2) Lime Kiln

The most common type of air pollution control device for the lime kiln is the venturi scrubber. As with the recovery boiler, the most favorable recovery level depends on the process economics. For the systems considered in Table C-8, the economic recovery level is assumed to be that achieved by a venturi scrubber with 37.5 cm (15 inches) of water pressure drop.* Two other venturi scrubbers with higher pressure drops are shown as alternative control devices. The capital costs are based on recent quotations and on a study done for EPA by the Industrial Gas Cleaning Institute.**

The cost attributed to air pollution control is the difference between the device in question and the 37.5-cm pressure drop venturi scrubber. These incremental costs are presented in Table C-8.

Proper process conditions such as the cold-end temperature, oxygen content in the kiln, the sulfide content in the lime mud, and the pH and sulfide content of the scrubbing water are necessary to reduce TRS emissions from the lime kiln. Cold-end temperature control is a well-defined process to control the TRS emissions. The costs given in Table C-8 are based on increasing the cold-end temperature by 100° (from 350°F to 450°F).

Scrubbing with a caustic solution will absorb some of the TRS emission from the lime kiln. For most mills the caustic is part of the ordinary makeup caustic to the mill; therefore, no cost is associated with this alternative.

---

*EPA, Air Regulations, 1975

**"Air Pollution Control Technology and Costs in Seven Selected Areas," Industrial Gas Cleaning Institute, EPA Contract No. 68-02-0289, December 1973.

TABLE C-8

CONTROL COSTS FOR LIME KILN SYSTEM

	Mill Size (tons per day)		
	500	1,000	1,500
Economic Level			
Venturi Scrubber (37.5 cm WG)			
Capital Cost, $	87,000	123,000	156,000
Gross Annual Cost, $	41,600	77,000	111,000
Credits, $/yr	(63,600)	(127,200)	(190,800)
Existing Mill			
Venturi Scrubber (50 cm)			
Capital Cost, $	155,000	235,000	300,000
Gross Annual Cost, $	52,600	98,200	141,600
Credits, $/yr	(65,800)	(131,600)	(197,400)
Incremental Capital Cost, $	68,000	112,000	144,000
Incremental Operating Cost, $/yr	8,800	16,800	24,800
$/ton	0.054	0.052	0.049
New Mill			
Venturi Scrubber (75 cm)			
Capital Cost, $	196,000	297,000	379,000
Gross Annual Cost, $	66,500	124,100	178,600
Credits, $/yr	(66,200)	(132,400)	(198,600)
Incremental Capital Cost, $/yr	109,000	174,000	223,000
Incremental Annual Cost, $/yr	22,300	41,900	61,000
$/ton	0.137	0.129	0.125
Process Control Operating Cost[a]			
$/yr	17,500	38,300	60,300
$/ton	0.108	0.118	0.124

[a]Based on the fuel cost to increase the cold-end temperature 100°F.

Source: Arthur D. Little, Inc. estimates

(3) Smelt Dissolving Tank

Three control techniques are presented in Table C-9 for the smelt dissolving tank. Demisters provide an economic recovery level. The cost of demisters includes the mesh pad and a water spray system and is based on the Sirrine report.* Credits are based on $35/ton for the recovered particulate. The weight of the recovered material is based on the emission factor given in the MRI report** and a collection efficiency of 80% for the mesh pad.

The packed tower with associated fan, liquid circulation pump, and control is used as an alternative control device for the smelt dissolving tank. Credits for recovered particulate are calculated in the same manner as for the demister case, except that the recovery efficiency is 96%.

The other alternative device is the orifice scrubber with associated fan, liquid circulation pump, and control. The costs of this type of control system are based on recent quotations. The collection efficiency of the orifice scrubber (20-25 cm WG) will be greater than 97%.

---

*"Control of Atmospheric Emissions in the Wood Pulping Industry," Environmental Engineering Inc. and J.E. Sirrine Company, EPA Contract No. CPA-22-69-18, March 1970.

**"Handbook of Emissions, Effluents and Control Practices for Stationary Particulate Pollution Sources," Midwest Research Institute, EPA Contract CPA-22-69-104, November 1970.

TABLE C-9

CONTROL COSTS FOR SMELT TANK SYSTEM

	Mill Size (tons per day)		
	500	1,000	1,500
Economy Level Mesh Pad (80%)			
Capital Cost, $	21,000	25,000	31,000
Gross Annual Cost, $	4,100	4,700	5,700
Credits, $/yr	(11,400)	(22,700)	(34,100)
Existing Mill Packed Tower (max. 96%)			
Capital Cost, $	77,000	121,000	153,000
Gross Annual Cost, $	19,700	34,000	46,000
Credits, $/yr	(13,600)	(27,300)	(40,900)
Incremental Capital Cost, $	56,000	96,000	122,000
Incremental Operating Cost, $/yr	13,400	24,700	33,500
$/ton	0.082	0.076	0.069
New Mill Orifice Scrubber (97%)			
Capital Cost, $	117,000	160,000	195,000
Gross Annual Cost, $	50,000	74,600	101,200
Credits, $/yr	(13,800)	(27,600)	(41,400)
Incremental Capital Cost, $	96,000	135,000	164,000
Incremental Operating Cost, $/yr	43,500	65,000	88,200
$/ton	0.268	0.200	0.181

Basis: Credits based on chemicals at $35/ton.

Source: Arthur D. Little, Inc. estimates

The control technique for reducing TRS emissions from the smelt dissolving tank is to use fresh water in the smelt dissolving tank scrubber. This feature can be designed into a new mill at essentially no cost. Therefore, no control costs are presented for control of TRS emissions.

(4) Digesters and Multiple-Effect Evaporators

The vent gas streams from the digesters and the multiple-effect evaporators are similar; both contain TRS compounds that create an odor problem. It is common practice to combine and treat the emissions from both affected facilities together; the control costs are presented for a combined treatment system. The costs in Table C-10 are for an incinerator in the lime kiln. The system consists of the necessary piping and blowers to collect the gas streams and delivery piping and controls to inject the gases into the lime kiln. The spare incinerator would handle the gases when the lime kiln is not operating. The type of digester affects the cost of the control system. The control cost for both cases (batch or continuous digester, and multiple-effect evaporator) based on the Sirrine report are shown in Table C-10.

TABLE C-10

CONTROL COSTS FOR DIGESTER AND MULTIPLE-EFFECT EVAPORATORS
(Incineration in the lime kiln)

	Mill Size (tons per day)		
	500	1,000	1,500
Batch Digesters[a]			
Capital Cost, $	162,000	235,000	318,000
Operating Cost, $/yr	35,000	54,000	73,500
$/ton	0.216	0.165	0.151
Continuous Digesters[a]			
Capital Cost, $	102,000	156,000	205,000
Operating Cost, $/yr	25,000	39,500	54,000
$/ton	0.155	0.121	0.110

[a]A separate incinerator is included.

Source: Arthur D. Little, Inc. estimates

(5) Brown Stock Washers

The gas stream from the brown stock washers is relatively large and has a low concentration of TRS. The only control technique is incineration in the recovery furnace. Estimates from the EPA are given in Table C-11. The control equipment consists of the necessary hoods, connecting piping, and controls to collect the gases and piping and controls to inject them into the recovery furnace.

(6) Black Liquor Oxidation System

One method of reducing TRS emissions from conventional recovery furnaces is to oxidize the black liquor to eliminate the compounds that cause TRS emissions when the black liquor contacts the furnace flue gas in the direct-contact evaporator.

Black liquor oxidation may be carried out to reduce the TRS emissions from the recovery boiler. The effluent gases from the black liquor oxidation with air represent an emission source. (No emissions are generated with black liquor oxidation using oxygen.) It will be necessary to treat these gases if it is a new source. The control method is to incinerate the gases in the recovery boiler. Since the offgas stream has a high moisture content, a condenser is necessary. The control costs are shown in Table C-12.

TABLE C-11

CONTROL COSTS FOR THE BROWN STOCK WASHERS
(Incineration in the recovery furnace)

	Mill Size (tons per day)		
	500	1,000	1,500
Capital Cost, $	164,000	252,000	318,000
Operating Cost, $/yr	29,500	46,000	58,000
$/ton	0.182	0.142	0.119

Source: Arthur D. Little, Inc. estimates

TABLE C-12

CONTROL COSTS FOR BLACK LIQUOR OXIDATION SYSTEM

	Mill Size (tons per day)		
	500	1,000	1,500
A. Air Oxidation of Black Liquor			
Capital Cost, $	333,000	484,000	649,000
Operating Cost, $/yr	113,000	168,000	231,000
$/ton	0.695	0.517	0.474
B. Incineration of Off-Gases in Recovery Boiler[a]			
Capital Cost, $	175,000	267,000	347,000
Operating Cost, $/yr	47,000	78,000	107,000
$/ton	0.290	0.239	0.220

[a]New sources only

Source: Arthur D. Little, Inc. estimates

(7) Condensate Stripper

In mills that have condensate strippers, the TRS compounds vented from the stripper can be controlled by incineration. The cost estimate shown in Table C-13 is based on a system including a fan, duct, seal pot, and flame arrester. The duct begins at the overhead condenser on the stripper and ends at the point where it connects with the noncondensible gas header that leads to the lime kiln and the spare incinerator.

(8) Power Boiler

Combination boilers (bark and oil, or bark and coal) or bark boilers are used as power boilers in the pulp industry. The discharge from a bark boiler consists of gaseous products of combustion containing particulate bark char and sand. Unlike most other stacks on a kraft mill, no significant gaseous air pollutants are emitted, and unlike most coal-fired boilers, there is no SO_2 problem, since there is little or no sulfur in the bark.

TABLE C-13

CONTROL COSTS FOR THE CONDENSATE STRIPPER
(Incineration in lime kiln)

	Mill Size (tons per day)		
	500	1,000	1,500
Capital Cost, $	13,000	18,600	23,000
Operating Cost, $/yr	4,700	5,800	6,700
$/ton	0.029	0.018	0.014

Source: Arthur D. Little, Inc. estimates

The cost of electrostatic precipitators for bark boilers and combination boilers having different capacities is given in Table C-14. The cost for the bark boilers was obtained from the IGCI report,* and the cost for the combination boilers was obtained from recent quotations. The boiler with a rated steam capacity of 350,000 lb/hr was for a 600-tpd (bleached) air-dried pulp mill.

The SO_2 problem in the combination boilers will depend on the fraction of the coal or oil used in the boiler and the sulfur content of the fuel. There are no SO_2 control systems installed in the pulp industry. The cost of such a system is not discussed here.

Bark fly ash, unlike most fly ash, is primarily unburned carbon; with collection and reinjection, it can increase boiler efficiencies from 1 to 4%.

The air pollution control system for boilers consists of a mechanical collector followed by an electrostatic precipitator or a scrubber. The cost of a mechanical collector is not included in the incremental cost shown in Table C-14, since it is considered economical to recycle the char recovered from the mechanical collector.

All of the states have established air quality standards that are the same as, or more stringent than, the federal standards. For illustrative purposes, the ambient air standards for the State of Wisconsin are given in Table C-15.

TABLE C-14

CONTROL COSTS FOR POWER BOILERS

Bark Boilers		
Rated Steam Load, lb/hr	100,000	300,000
ESP Capital Cost, $	440,000	886,000
Operating Cost, $/yr	110,000	221,000
Bark/Oil Boilers (1/3 Bark, 2/3 Oil)		
Rated Steam Load, lb/hr	250,000	350,000
ESP Capital Cost, $	1,062,000	1,300,000
Operating Cost, $/yr	266,000	325,000

Source: Arthur D. Little, Inc. estimates

*"Air Pollution Control Technology and Costs in Nine Selected Areas," EPA report 63-02-0301 by Industrial Gas Cleaning Institute, September 1972.

TABLE C-15

WISCONSIN AMBIENT AIR STANDARDS

	Primary $\mu g/m^3$ (ppm)	Secondary $\mu g/m^3$ (ppm)
SO_x		
Annual Arithmetic Mean	80 (0.03)	60 (0.02)
24-hr Concentration[a]	365 (0.14)	260 (0.1)
3-hr Concentration[a]		1,300 (0.5)
Particulate		
Annual Geometric Mean	75	60
24-hr Concentration[a]	260	150
CO		
8-hr Concentration[a]	10,000 (9)	10,000 (9)
1-hr Concentration[a]	40,000 (35)	40,000 (35)
Photochemical Oxidants		
1-hr Concentration[a]	160 (0.08)	160 (0.08)
Hydrocarbons		
3-hr Concentration	160 (0.24)	160 (0.24)
NO_2		
Annual Arithmetic Mean	100 (0.05)	100 (0.05)

[a]Not to be exceeded more than once a year.

Each state is required to adopt and to submit implementation plans to the Administrator of the Environmental Protection Agency for its emission reduction strategy and enforcement thereof to achieve air quality standards for particulates, sulfur oxides, nitrogen oxides, hydrocarbons, and carbon monoxide. Also, the Environmental Protection Agency has established emission standards to achieve ambient air quality standards for new sources. The federal and the state standards for pulp mills were presented earlier.

(9) Nondegradation of Air Quality

The requirements regarding nondegradation of air quality are applicable to the new sources. Under the proposed regulation, if the ambient air quality is better than the primary and secondary air quality standards, a new source would not be allowed to degrade the air quality significantly. The following factors should be considered in applying the principle of nondegradation of air quality:

- The quantity and characteristics of air contaminants which may cause air pollution in a particular area of the state and the duration of their presence in the atmosphere;

- Existing physical conditions and topography;
- Prevailing wind directions and velocities;
- Temperatures and temperature-inversion periods, humidity, and other atmospheric conditions;
- Possible chemical reactions between air contaminants or between such air contaminants and air gases, moisture, or sunlight;
- The predominant character of development of the area of the state (residential, highly developed industrial, commercial, etc.);
- Priority of location in the area involved;
- Availability of air-cleaning devices;
- Economic feasibility of air-cleaning devices;
- Effect on normal human health of particular air contaminants;
- Effect on efficiency of industrial operation resulting from use of air-cleaning devices;
- Probable effect of air contaminants on property in the area;
- Interference with reasonable enjoyment of life by persons in the area and conduct of established enterprises which can reasonably be expected from air contaminants;
- The volume of contaminants emitted from a particular class of air contaminant source;
- The economic and industrial development of the state and the social and economic value of the source of air contaminants; and
- The maintenance of public enjoyment of the state's natural resources.

(10) Application of Air Control Cost Estimates

Using the economic models for the investment and operating costs for selected products of the kraft pulping process, ADL added the estimated cost for air control developed in the previous tables. Table C-16 summarizes the control costs for new kraft mill sources (excluding power boiler) producing 500 and 1,000 tpd; also listed are costs applicable to an 800-tpd bleached kraft pulp mill and a 1,000-tpd unbleached kraft pulp mill. New mill sources were based on a conventional recovery boiler with black liquor oxidation for TRS control.

TABLE C-16

AIR CONTROL COSTS, NEW MILL SOURCES
(thousands of dollars, mid-1975)

Item	TOTAL COSTS Capital	TOTAL COSTS Annual Operating [a]	ECONOMIC LEVEL Capital	ECONOMIC LEVEL Annual Operating [a]
A. 1000-tpd Bleached Kraft				
Recovery Boiler	3,700	(946)	2,780	(946)
Lime Kiln	300	(53)	120	(68)
Smelt Tank	160	23	30	(22)
Digester and Evaporators	160	16		
Black Liquor Oxidation	270	38		
Brown Stock Washers & Cond. Stripping	270	-	-	-
TOTAL	4,860	(922)	2,930	(1,036)
B. 500-tpd Bleached Kraft				
Recovery Boiler	2,450	(426)	1,840	(429)
Lime Kiln	200	(29)	90	(35)
Smelt Tank	120	19	20	(11)
Digester and Evaporators	100	10		
Black Liquor Oxidation	180	21		
Brown Stock Washers & Cond. Stripping	180	-	-	
TOTAL	3,230	(405)	1,950	(475)
C. 800-tpd. Bleached Kraft Total	4,250	(730)	2,600	(830)
D. 1000-tpd Unbleached Kraft Total	4,550	(820)	2,800	(930)

[a] Excluding depreciation and interest

Source: Arthur D. Little, Inc., estimates

4. ALLOCATION OF POLLUTION-RELATED COSTS

Many of the capital costs associated with pollution control show net operating savings which make them potentially attractive investments. However, the exact profitability generally cannot be evaluated; it is a function of a number of variables, including scale of operation, type of process, regional labor and power rates, etc.

We obtained air and water pollution abatement costs estimates from published or accepted sources. For air control costs, we updated and revised information originally published by EPA. These costs were apportioned between those investment and operating costs for economic recovery of byproduct (namely, 97.5% particulate recovery) and the incremental investment and operating costs specifically required for compliance with air control regulations.

The percentage of investment and operating costs that would be associated with economical reuse of water within the manufacturing operation is not specifically cited in the Development Document. However, subsequent discussion with the engineering firm that prepared the cost estimates for that report indicated that about 50% of the investment for internal treatment would be for economic operation.

We have accepted these generalizations with the understanding that they are only rough approximations; the exact allocation is highly judgmental and cannot be generalized. We have presented our cost calculations so that the economic levels of control for both water and air are included in the basic manufacturing costs. These items are identified separately so that the reader can conveniently make alternative judgments.

TECHNICAL REPORT DATA
(Please read Instructions on the reverse before completing)

1. REPORT NO. EPA-600/7-76-034e	2.	3. RECIPIENT'S ACCESSION NO.
4. TITLE AND SUBTITLE ENVIRONMENTAL CONSIDERATIONS OF SELECTED ENERGY CONSERVING MANUFACTURING PROCESS OPTIONS. Vol. V. Pulp and Paper Industry Report		5. REPORT DATE December 1976 issuing date 6. PERFORMING ORGANIZATION CODE
7. AUTHOR(S)		8. PERFORMING ORGANIZATION REPORT NO.
9. PERFORMING ORGANIZATION NAME AND ADDRESS Arthur D. Little, Inc. Acorn Park Cambridge, Massachusetts 02140		10. PROGRAM ELEMENT NO. EHE624B 11. CONTRACT/GRANT NO. 68-03-2198
12. SPONSORING AGENCY NAME AND ADDRESS Industrial Environmental Research Laboratory Office of Research and Development U.S. Environmental Protection Agency Cincinnati, Ohio 45268		13. TYPE OF REPORT AND PERIOD COVERED Final 14. SPONSORING AGENCY CODE EPA-ORD

15. SUPPLEMENTARY NOTES Vol. III-IV, EPA-600/7-76-034c through EPA-600/7-76-034d, and Vol. VI-XV, EPA-600/7-76-034f through EPA-600/7-76-034o, refer to studies of other industries as noted below; Vol. I, EPA-600/7-76-034a is the Industry Summary Report and Vol. II, EPA-600/7-76-034b is the Industry Priority Report.

16. ABSTRACT

This study assesses the likelihood of new process technology and new practices being introduced by energy intensive industries and explores the environmental impacts of such changes.

Specifically, Vol. V examines four options in the pulp and paper industry in depth: (1) alkaline-oxygen pulping, (2) Rapson effluent-free kraft process, (3) thermo-mechanical pulping, and (4) deinking of old newsprint; all in terms of relative economics and environmental/energy consequences.

Vol. III and IV and Vol. VI-XV deal with the following industries: iron and steel, petroleum refining, olefins, ammonia, aluminum, textiles, cement, glass, chlor-alkali, phosphorus and phosphoric acid, copper, and fertilizers. Vol. I presents the overall summation and identification of research needs and areas of highest overall priority. Vol. II, prepared early in the study, presents and describes the over-view of the industries considered and presents the methodology used to select industries.

17. KEY WORDS AND DOCUMENT ANALYSIS

a. DESCRIPTORS	b. IDENTIFIERS/OPEN ENDED TERMS	c. COSATI Field/Group
Energy; Pollution; Industrial Wastes; Pulps; Papers	Manufacturing Processes; Energy Conservation	13B

18. DISTRIBUTION STATEMENT Release to public	19. SECURITY CLASS *(This Report)* unclassified	21. NO. OF PAGES 204
	20. SECURITY CLASS *(This page)* unclassified	22. PRICE

EPA Form 2220-1 (9-73)