United States
Environmental Protection
Agency

Industrial Environmental Research
Laboratory
Research Triangle Park NC 27711

EPA-600/2-79-048
February 1979

Research and Development

EPA

Acrylonitrile Plant Air Pollution Control

RESEARCH REPORTING SERIES

Research reports of the Office of Research and Development, U.S. Environmental Protection Agency, have been grouped into nine series. These nine broad categories were established to facilitate further development and application of environmental technology. Elimination of traditional grouping was consciously planned to foster technology transfer and a maximum interface in related fields. The nine series are:

1. Environmental Health Effects Research
2. Environmental Protection Technology
3. Ecological Research
4. Environmental Monitoring
5. Socioeconomic Environmental Studies
6. Scientific and Technical Assessment Reports (STAR)
7. Interagency Energy-Environment Research and Development
8. "Special" Reports
9. Miscellaneous Reports

This report has been assigned to the ENVIRONMENTAL PROTECTION TECHNOLOGY series. This series describes research performed to develop and demonstrate instrumentation, equipment, and methodology to repair or prevent environmental degradation from point and non-point sources of pollution. This work provides the new or improved technology required for the control and treatment of pollution sources to meet environmental quality standards.

EPA REVIEW NOTICE

This report has been reviewed by the U.S. Environmental Protection Agency, and approved for publication. Approval does not signify that the contents necessarily reflect the views and policy of the Agency, nor does mention of trade names or commercial products constitute endorsement or recommendation for use.

This document is available to the public through the National Technical Information Service, Springfield, Virginia 22161.

EPA-600/2-79-048

February 1979

Acrylonitrile Plant Air Pollution Control

by

M.T. Anguin and S. Anderson

Acurex Corporation
685 Clyde Avenue
Mountain View, California 94042

Contract No. 68-03-2567
Program Element No. 1AB604

EPA Project Officer: Irvin A. Jefcoat

Industrial Environmental Research Laboratory
Office of Energy, Minerals, and Industry
Research Triangle Park, NC 27711

Prepared for

U.S. ENVIRONMENTAL PROTECTION AGENCY
Office of Research and Development
Washington, DC 20460

TABLE OF CONTENTS

Section		Page
1	SUMMARY	1-1
2	INTRODUCTION	2-1
3	SOURCE DESCRIPTION AND CURRENT CONTROL PRACTICES	3-1
	3.1 INDUSTRY OVERVIEW	3-1
	3.2 SOHIO PROCESS	3-2
	3.2.1 Process Description	3-2
	3.2.2 Waste Stream Description	3-8
	3.2.3 Control Technologies	3-19
	3.3 MONTEDISON PROCESS	3-22
4	ALTERNATE CONTROL METHODS	4-1
	4.1 INTRODUCTION	4-1
	4.2 FLARES	4-2
	4.2.1 Technical Description	4-2
	4.2.2 Suitable Waste Streams	4-3
	4.2.3 Technical Feasibility	4-4
	4.2.4 Efficiency, Cost, Reliability, and Energy Requirements	4-4
	4.2.5 Conclusions	4-6
	4.3 THERMAL INCINERATION	4-8
	4.3.1 Technical Description	4-8
	4.3.2 Suitable Waste Streams	4-13

TABLE OF CONTENTS (Continued)

Section		Page
4 (cont)	4.3.3 Technical Feasibility	4-13
	4.3.4 Efficiency, Cost, Reliability, and Energy Requirements	4-18
	4.3.5 Conclusion	4-19
	4.4 CATALYTIC INCINERATION	4-20
	4.4.1 Technical Description	4-20
	4.4.2 Suitable Waste Streams	4-24
	4.4.3 Technical Feasibility	4-24
	4.4.4 Efficiency, Cost, Reliability, and Energy Requirements	4-27
	4.4.5 Conclusion	4-27
	4.5 CARBON ADSORPTION	4-28
	4.5.1 Technical Description	4-28
	4.5.2 Suitable Waste Streams	4-31
	4.5.3 Technical Feasibility	4-31
	4.5.4 Efficiency, Cost, Reliability, and Energy Requirements	4-34
	4.5.5 Conclusion	4-34
	4.6 SOLVENT EXTRACTION AND ABSORPTION	4-35
	4.6.1 Technical Description	4-35
	4.6.2 Suitable Waste Streams	4-35
	4.6.3 Technical Feasibility	4-36
	4.6.4 Efficiency, Cost, Reliability, and Energy Requirements	4-38
	4.6.5 Conclusion	4-38

TABLE OF CONTENTS (Concluded)

Section		Page
5	GENERAL CONSIDERATIONS	5-1
	5.1 CONTROL METHODS FOR SPECIFIC STREAMS	5-1
	5.1.1 Absorber Vent Gas Stream	5-1
	5.1.2 Liquid Stream on Way to Holding Pond	5-1
	5.1.3 HCN and Acentonitrile Incinerators	5-1
	5.1.4 Startup Emission Stream	5-2
	5.2 RESEARCH AND DEMONSTRATION RECOMMENDATIONS	5-2
	5.2.1 Absorber Vent Gas Stream	5-2
	5.2.2 Liquid Stream on Way to Holding Pond	5-2
	5.2.3 HCN and Acetonitrile Incinerators	5-3
	5.2.4 Startup Emission Stream	5-4
	REFERENCES	R-1
	APPENDIX A	A-1
	APPENDIX B	B-1

LIST OF ILLUSTRATIONS

Figure		Page
3-1	Flow Diagram for a Representative Acrylonitrile Plant	3-4
4-1	Coupled Effects of Temperature and Time on Rate of Pollutant Oxidation	4-9
4-2	Direct-Fired Afterburner with Tangential Burner Arrangement	4-11
4-3	Low NO_x Emission Incineration	4-12

LIST OF ILLUSTRATIONS (Concluded)

Figure		Page
4-4	Species Flux vs. Time, Flame 3	4-15
4-5	Comparison of the Relationship of Equivalence Ratio and NO Yields	4-17
4-6	Schematic Diagram of Catalytic Afterburner	4-21
4-7	Schematic of a Catalytic Abater in Use at Acrylonitrile Plant	4-22
4-8	Catalytic Incinerator	4-23
4-9	Effect of the Adiabatic Flame Temperature on the Conversion of NH_3 to NO	4-26
4-10	Acrylonitrile Adsorption on PPL Activated Carbon	4-30

LIST OF TABLES

Table		Page
3-1	Stream Codes for Figure	3-5
3-2	Acrylonitrile REactor System Heat Balance	3-7
3-3	Material Balance for a Representative Arcylonitrile Plant	3-10
3-4	Streams to and from Catalytic Oxidizer	3-13
3-5	Acrylonitrile Plant Waste Water	3-15
3-6	Untreated Process Water Load Discharged to Deep Wells . .	3-16
3-7	Streams to and from Incinerator	3-17
3-8	Startup Emission Stream	3-18
3-9	Control Technologies for Emission Streams	3-20
4-1	Comparison of Startup and Continuous Flow Gas Streams . .	4-5

SECTION 1

SUMMARY

The Industrial Environmental Research Laboratory is responsible for performing the research and development required to assess the impacts of pollution from a variety of industries and to evaluate the applicability of various control technologies for these industries. Pollution control options must be evaluated for efficiency, reliability, economics, and energy consumption. If secondary pollutants are generated by the cleanup of the original pollutant, their impact must also be assessed. This report on acrylonitrile plants addresses these aspects of control technology evaluation.

The purpose of the report is to provide data for making decisions about control technology. Control technologies are identified and ranked in terms of efficiency, cost, and energy requirements. Control technology demonstration opportunities in the acrylonitrile industry are also identified.

There are six operating acrylonitrile plants in the U.S. Each has several air pollutant emission sources. The effluent streams addressed in this report are:

- The absorber vent gas stream
- The liquid waste streams that go to the holding ponds and deep-well ponds

- The HCN and acetonitrile incinerators and their off-gas streams
- The reactor startup emission streams

The absorber vent gas stream, when unabated, emits large quantities of hydrocarbons. Thermal incineration is used for abatement of this stream at one acrylonitrile plant, and catalytic incineration is used at another plant. Data for these streams and their abatement by the incineration processes were available from EPA contractors. Using these data, the effectiveness of catalytic and thermal incineration was evaluated. A quick review of the literature showed other methods to be unsuitable: carbon adsorption because the pollutants are too low in molecular weight, and hydrocarbon absorption because the stream is too dilute. It was concluded that thermal incineration with waste heat recovery is the best method for abatement of this stream; catalytic incineration has a high unburned-hydrocarbon passthrough rate.

High levels of hydrocarbon emission occur from the holding ponds. There are no reasonable pollution control technologies for open ponds, but there are control technologies for hydrocarbon removal from waste water on its way to the ponds. A review of studies and demonstration projects on solvent extraction of organic nitrogen containing waste waters was made. In addition, a patent for changing the acrylonitrile processing to eliminate water scrubbing of the product was reviewed. This would also eliminate most of the waste water production. These methods are still in the research and development stage, and conclusions about their efficacy cannot be drawn.

All acrylonitrile plants have HCN and acetonitrile thermal incinerators; the emissions data available (from other EPA contractors) for the exit streams from these incinerators showed 0.6 percent conversion

of fuel nitrogen to NO_x. A review of the combustion literature revealed that 20 to 80 percent of conversion of fuel nitrogen to NO_x could be expected. (This discrepancy should be resolved by further study.) Catalytic incinerators were evaluated as replacements for the existing incinerators; a literature review shows that similar levels of NO_x production could be expected.

When reactors at acrylonitrile plants are started up, the emissions from these reactors are vented directly to the atmosphere. To control this intermittent pollution stream, which contains up to 10,000 lbs of acrylonitrile per reactor per emission, flares and carbon adsorption were evaluated. Flares (and other combustion methods) form unacceptable amounts of NO_x. Carbon adsorption, and wet scrubbing followed by carbon adsorption, appear to be more effective.

This report presents the following conclusions:

- Absorber vent stream: Thermal incineration is an acceptable and efficient control method. Thermal incinerators are currently in use, and no further development is required.
- Holding pond: Extraction of hydrocarbons from the waste water before it is sent to a holding pond is the most desirable control method. Bench and pilot-plant scale research on carbon adsorption and hydrocarbon absorption (solvent extraction) is recommended. A literature review of the waste water control methods in use in Europe (e.g., the Montecatini plant) is also recommended.
- Hydrogen cyanide/acetonitrile incinerators: Investigation of the NO_x production of the existing incinerators is recommended. Threre is a potential for high levels of NO_x

emissions from these incinerators. A feasibility study of advanced incineration techniques -- two-stage (low NO_x) thermal and catalytic incinerators -- is also recommended.

- Startup emissions: A study of the feasibility of routing startup emissions to the absorber tower for scrubbing and a demonstration of a combined wet-scrubber and carbon adsorption abatement technique are recommended.

SECTION 2

INTRODUCTION

The Industrial Environmental Research Laboratory is responsible for performing the research and development required to assess the impacts of pollution from a variety of industries and to evaluate the applicability of various control technologies for these industries. Pollution control options must be evaluated for efficiency, reliability, economics, and energy consumption. If secondary pollutants are generated by the cleanup of the original pollutant, their impact must also be assessed. This report on acrylonitrile plants addresses these aspects of control technology evaluation.

The exposure of the general public to emissions from acrylonitrile plants has recently been evaluated by Monsanto Research Corporation under contract to EPA. The result of that study was a Source Assessment Document (SAD) (Reference 1), which describes the effluent streams from a typical acrylonitrile plant and assesses the pollution problems of the industry.

This report evaluates the control technologies available for the effluent streams identified in the SAD. Where adequate control technologies do not exist, this report evaluates the need to develop new methods of control. To avoid redundancy, this document is organized according to control technologies instead of waste streams. Section 3

describes the waste stream sources and current industrial control practices. Section 4 discusses alternative control methods. Section 5 includes a comparative evaluation of control technologies for each waste stream and presents recommendations for further study.

SECTION 3

SOURCE DESCRIPTION AND CURRENT CONTROL PRACTICES

3.1 INDUSTRY OVERVIEW

Acrylonitrile is a colorless liquid with a mild odor. It boils at 77.3°C. The molecular structure is:

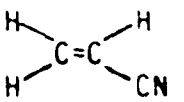

The most common process for making acrylonitrile uses agricultural grade ammonia and propylene as raw materials.

Acrylonitrile is a feedstock used to produce polymers for the manufacture of acrylic fabrics and some synthetic rubber. The compound is also used to make the plastic resins acrylonitrile-butadiene-styrene (ABS) and styrene-acrylonitrile (SAN). Six plants produced 1.5 billion pounds of acrylonitrile in the United States in 1977. Annual production is projected to reach 2.5 billion pounds by 1981 (Reference 2). All six American plants use the SOHIO process described in Section 3.2.

In 1974 a report by Air Products Corporation predicted that by 1982 acrylonitrile plants would rank second in total annual emissions from all sources and first among the major petrochemical processes when those emissions are weighted according to the amount and toxicity of the effluent constituents. (In making this determination, hydrocarbons were

given a weighting factor of 80, all particulates 60, and carbon monoxide 1.) (Reference 3).

Evidence indicates that acrylonitrile is a potential public health hazard (Reference 2). Acute toxicity has been observed in workers exposed to 16 to 100 ppm acrylonitrile levels for twenty to forty-five minutes. Acute intoxication resulting in death has been reported in a case where children slept in a room that had been disinfected with acrylonitrile.

Acrylonitrile has been shown to be carcinogenic in laboratory studies with animals (References 4 and 5). In addition, preliminary epidemiological data indicate that it may cause cancer in humans. The health records of 470 male employees working in the acrylonitrile polymerization area of a plant were studied. These men breathed acrylonitrile vapors. Sixteen cancer cases occurred in this group, while only seven could be expected based on national cancer rates.

The Occupational Safety and Health Administration recently estimated that a capital expenditure of $4,740,000 would be required in order to lower the ambient concentration of acrylonitrile within a typical plant to 1 ppm. The typical plant would have 167 employees and produce 255 million pounds of acrylonitrile a year (Reference 2).

3.2 SOHIO PROCESS

3.2.1 Process Description

As previously noted, all six acrylonitrile plants in this country use the SOHIO process. (Figure 3-1). The process streams are listed in Table 3-1. The basic chemical equation for the formation of acrylonitrile is:

$$2\ CH_2 = CH\text{-}CH_3 + 2\ NH_3 + 3\ O_2 \rightarrow 2\ CH_2 = CH\text{-}CN + 6\ H_2O$$

A bismuth-molybdenum catalyst (catalyst 41) currently is used; this type of catalyst replaced a uranium catalyst, (catalyst 21) which replaced an older version of the bismuth-molybdenum catalyst (catalyst A). (Reference 6).

Approximately stoichiometric proportions of air, ammonia, and propylene are introduced into a fluidized bed reactor. Once-through flow is used since conversion of propylene is virtually complete. The reaction is exothermic so heat removal must be provided. The heat of reaction is normally used to generate steam by heat exchange and the effluent is then sent to a water quench tower where acid is added to neutralize unconverted ammonia. The stream then flows through a water absorber-stripper to reject inert gases and recover reaction products. The operation yields a mixture of acetonitrile, acrylonitrile, and HCN. The mixture is first distilled to remove acetonitrile and water. Next, acrylonitrile is separated from the HCN by fractionation. The final two steps involve drying of the acrylonitrile stream and a final distillation to remove heavy ends. The acrylonitrile product thus obtained is 99+ percent pure.

Primary raw materials for acrylonitrile production are agricultural grade ammonia and propylene (more than 90 percent C_3). No alternative raw materials are available for the SOHIO process. Impurities in the

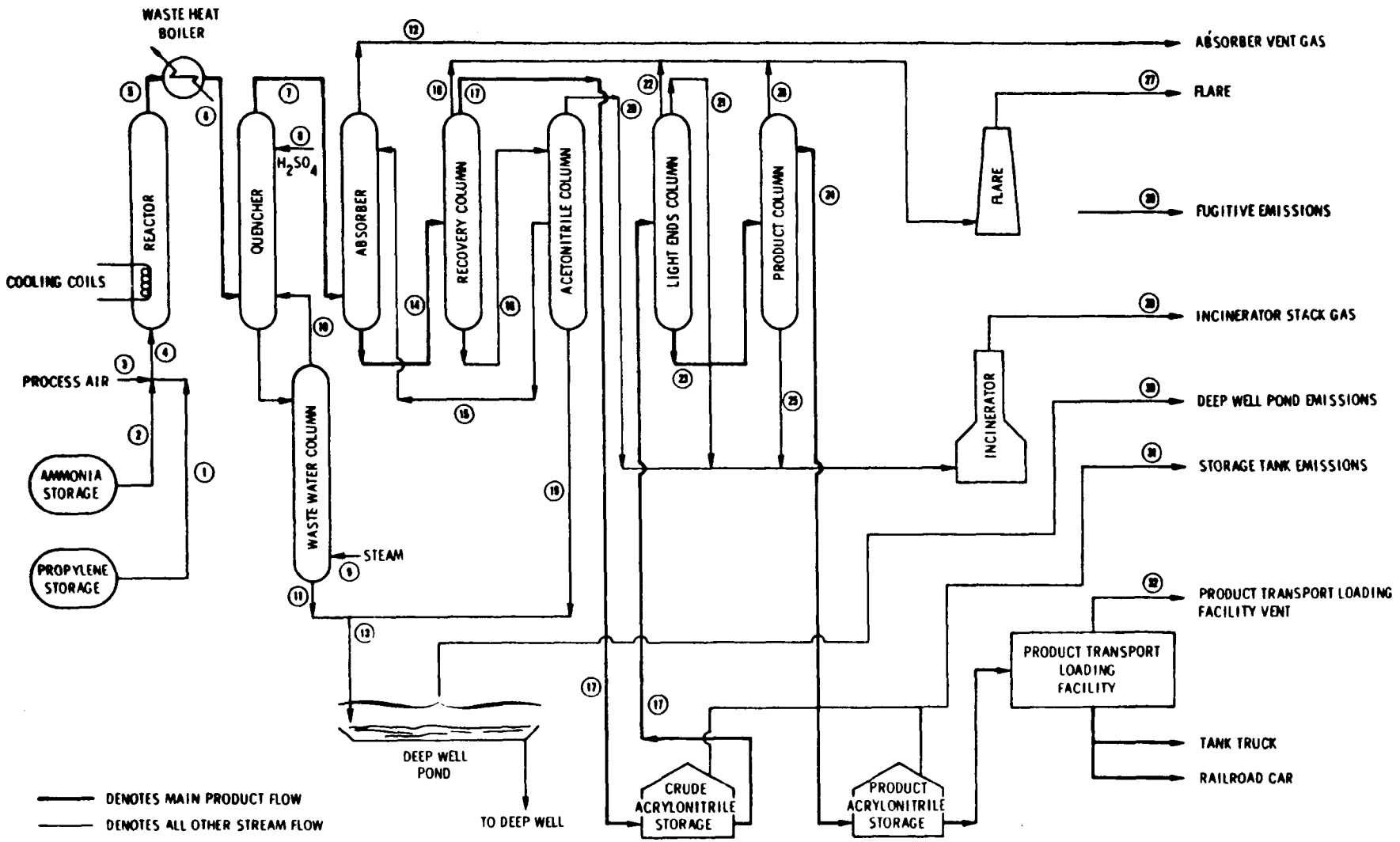

Figure 3-1. Flow Diagram for a Representative Acrylonitrile Plant (Reference 1)

TABLE 3-1. STREAM CODES FOR FIGURE 1 (Reference 1)

Stream Number	Description
1	Propylene feed
2	Ammonia feed
3	Process air
4	Reactor feed
5	Reactor product
6	Cooled reactor product
7	Quenched reactor product
8	Sulfuric acid
9	Stripping stream
10	Waste water column volatiles
11	Waste water column bottoms
12	Absorber vent gas
13	Acrylonitrile plant waste water
14	Absorber bottoms
15	Water recycle
16	Crude acetonitrile
17	Crude acrylonitrile
18	Recovery column purge vent
19	Acetonitrile column bottoms
20	Acetonitrile
21	Hydrogen cyanide
22	Light ends column purge vent
23	Light ends column bottoms
24	Product acrylonitrile
25	Heavy ends
26	Product column purge vent
27	Flare
28	Fugitive emissions
29	Incinerator stack gas
30	Deep well pond emissions
31	Storage tank emissions
32	Product transport loading facility vent

propylene feed with less than four carbon atoms are unaffected by the reaction, but those with four or more participate and, therefore, are undesirable.

Acetonitrile and hydrogen cyanide are produced as by-products in the amount of about 0.1 pound of each per pound of acrylonitrile. These products can be produced at saleable purity (99 percent purity); however, they cannot always be marketed. Parts of each of these by-products are usually incinerated (Reference 6).

Streams 1, 2 and 3 (propylene feed, ammonia feed and process air) combine to form stream 4, the reactor feed. The reactor operates at 135 to 310 kPa and 400°C to 510°C as a fluidized bed; the catalyst is the solid phase and the reactants and products are the vapor phase. Cooling coils extract heat from the reactor.

Further heat is extracted from the product gases (stream 5) in a waste heat boiler. Table 3-2 shows a heat balance for an acrylonitrile reactor system.

Although the stoichiometric ratio of propylene/ammonia/air would be 1/1/7.14, the actual ratio fed in to the reactor is 1/1.06/8.40. The excess ammonia forces the reaction closer to completion, and the excess air continually regenerates the catalyst (Reference 1).

The reactor effluent stream is cooled in the heat exchanger of a waste heat boiler (stream 6). The effluent next goes to the quencher where sulfuric acid is added. The sulfuric acid reacts with the excess ammonia to form ammonium sulfate. Catalyst fines are also scrubbed into the liquid acid. Bottoms from the quencher are sent to the waste water column, where the volatiles are stripped with steam and returned to the quencher (stream 10). The residual (stream 11) goes to the deep well pond.

TABLE 3-2. ACRYLONITRILE REACTOR SYSTEM HEAT BALANCE[a] (Reference 1)

Heat out	kJ/g acrylonitrile
Steam generation	
Cooling coils inside reactor	15.66
Waste heat boiler	5.02
Reactor heat losses	0.10
Quench (232°C to 43°C)	9.52
Incremental effluent heat content[b]	-2.33
TOTAL	27.97

Heat in	kJ/g acrylonitrile
Exothermic heat of reaction	
Acrylonitrile formation	21.93
Effluent neutralization	3.20
Feed vaporization and preheat	2.84
TOTAL	27.97

[a]Basis: Data shown later in Table 12; feed preheated to 149°C; reactor outlet temperature 510°C (max.).

[b]Difference in heat content of reactor product at 43°C and feed at 27°C (liquid) plus air at 38°C.

Volatiles from the quencher go into the absorber, a tray-type column where the acrylonitrile product and by-products (hydrogen cyanide and acetonitrile) are absorbed by water. Absorber columns are operated with and without auxiliary cooling. Most plants vent gas from the absorber directly to the atmosphere (stream 12), but one plant uses a thermal incinerator, and another plant uses a catalytic incinerator. The absorber bottoms, water with absorbed product and by-products (stream 14), are sent to the recovery column.

In the recovery column, the absorber bottoms are separated into two streams: crude acrylonitrile (stream 17) and crude acetonitrile (stream 16). The crude acetonitrile is sent to the acetonitrile column where it is separated into acetonitrile (stream 20), water to be recyled (stream 15), and acetonitrile column bottoms (stream 19). In most cases, this acetonitrile is incinerated; however, in one plant it is purified and sold. The recyled water is sent back to the absorber, and the acetonitrile column bottoms are sent to the deep well pond.

The crude acrylonitrile (stream 17) is stored in tanks after leaving the recovery column. From these tanks it is sent to the light ends column, where materials with low boiling points are removed from the stream. Process stream 21 from the light ends column contains hydrogen cyanide, which is either incinerated or sold.

Bottoms from the light ends column are sent to the product column (stream 23) where the acrylonitrile is finally distilled. Waste products from the product column bottoms, made up of polymers, water, hydrogen cyanide, and miscellaneous organics, are incinerated. The product is sent to storage tanks.

Table 3-3 shows a material balance for a representative acrylonitrile plant.

3.2.2 Waste Stream Description

The recent Source Assessment Document for acrylonitrile plants evaluated the severity of the pollution caused by various effluent streams. Hydrocarbon emissions from the absorber vent gas and the deep well pond were found to be the most serious pollution problems. In the course of the present study, two other potentially serious pollutant sources have been identified: NO_x emissions may be produced by the hydrogen cyanide and acetonitrile incinerators, and hydrocarbon and acrylonitrile emissions occur during reactor startup.

Absorber Vent Gas

Emissions data for the absorber vent gas are shown in Table 3-4. These data taken from the Hydroscience Trip Report of September 1977, (Reference 7) are more detailed than the emissions data in the Air Products report (Reference 6). Data used in the Source Assessment Document were obtained from T. Hughes at Monsanto (Reference 8). However, the data from Mr. Hughes is for absorber vent gas that is mixed with other streams before incineration, so these emission control data are not directly comparable to the Hydroscience Trip Report data.

Deep Well Pond

Existing data for the deep well pond were not evaluated because there are so few practical control methods for air emissions from open ponds. The current control method (heavy oil on the surface) is probably as effective as any. Another effective control method is to lower or change the pollutant load of the pond. Therefore, data was assembled on the waste water on its way to the pond and pollution control methods for

TABLE 3-3. MATERIAL BALANCE FOR A REPRESENTATIVE ACRYLONITRILE PLANT[a] (Reference 1)

	Stream number									
	1	2	3	4	5	6	7	8	11	12
	Description									
Component	Propylene feed	Ammonia feed	Process air	Reactor feed	Reactor product	Cooled reactor product	Quenched reactor product	Sulfuric acid	Waste water column bottoms	Absorber vent gas[b]
Nitrogen		2.5[c]	5,865[d]	5,867	5,867	5,867	5,867			5,867[d]
Oxygen			1,561	1,561	103	103	103			103
Carbon dioxide					185	185	185			185
Water			83.5	83.5	1,653	1,653	1,653		3,470	922
Propylene	1,289			1,289	32[e]	32	32			32
Propane	22			22	22[e]	22	22			22
Ammonia		553.1		553.1	24	24				
Carbon monoxide					178	178	178			178
Acrylonitrile					1,000[e]	1,000	1,000			<0.1
Acetonitrile					118[e]	118	118			0.6
Hydrogen cyanide					118[e]	118	118		0.9	0.3
Sulfuric acid								70.6		
Ammonium sulfate									93.2	
Oxygenated hydrocarbons					95	95			79.3	
Organic polymers										
TOTALS	1,311	556	7,510	9,375	9,395	9,395	9,276	70.6	3,643	7,310

(continued)

Note: Blanks indicate no component present in stream.

[a]All values are g/kg of product acrylonitrile.

[b]Emissions determined through field sampling.

[c]Ammonia used is agricultural grade as described in Section III.A.1.

[d]Composition of the combined reactor feed is based upon the following mole rates: 1 C_3H_6/1.06 NH_3/8.4 air.

[e]Conversion of propylene = 98%; conversion of propane = 0%; yield of acrylonitrile is 0.78 g AN/g C_3H_6; yield of HCN and ACN = 0.09 g/g C_3H_6.

TABLE 3-3. Continued

Component	Stream number 13	14	15	16	17	19	20	21	23	24
	Description									
	Acrylonitrile plant waste water	Absorber bottoms	Water recycle	Crude acetonitrile	Crude acrylonitrile	Acetonitrile column bottoms	Acetonitrile	Hydrogen cyanide	Light ends column bottoms	Product acrylonitrile
Nitrogen										
Oxygen										
Carbon dioxide										
Water	4,470	23,714	23,000	23,000	10,000	1,000				
Propylene										
Propane										
Ammonia										
Carbon monoxide										
Acrylonitrile		1,000			1,000				1,000	1,000
Acetonitrile		118		118			118		5.1	3.1
Hydrogen cyanide	1.0	118			118			118		
Sulfuric acid										
Ammonium sulfate	93									
Hydrocarbons	79	16		17.5	1.2	7.5			1.0	1
Organic polymers					7				7.1	1
TOTALS	4,643	24,966	23,000	23,136	11,126	1,008	118	118	1,013	1,005

(continued)

TABLE 3-3. Concluded

Component	Stream number 25	27	28	29	30	31	32
	Description						
	Heavy ends	Flare stack gas	Fugitive losses	Incinerator stack gas	Deep well pond emissions	Storage tank losses	Product transport loading facility vent
Nitrogen		72.5		1,771			
Oxygen		2		174			
Carbon dioxide		16		300			
Water		8		435			
Propylene		0.02	0.006				
Propane			0.0006				
Ammonia			0.006				
Carbon monoxide							
Acrylonitrile		0.04	0.4			0.802	
Acetonitrile	2		0.02				
Hydrogen cyanide		0.35		0.034		0.81	0.0065
Sulfuric acid							
Ammonium sulfate							
Hydrocarbons					7		
Organic polymers	6.1						
TOTALS	8.1	98.9	0.43	2,680	7	0.81	0.0065

TABLE 3-4. STREAMS TO AND FROM CATALYTIC OXIDIZER (Reference 7)

	Source[a]		Emission[b]	
Stream No.				
Flowrate, CFM, 70°F	81994		138926	
Flow determined by	Flowmeter		Calculation	
Temperature	40°C		400°	
Pressure	1.5 psig		Atm	
Composition determined by	Analysis		Analysis	
Component or formula	Wt.	lb/hr	Wt	lb/hr
Acrylonitrile	0.001	5	--	1
HCN	0.002	7	--	1
Acetonitrile	0.032	111	0.005	28
Acetaldehyde	0.002	7	0.001	7
CO	1.643	5636	0.227	1386
Propylene	0.386	1334	0.051	312
Propane	0.790	2733	0.341	2080
Ethane	0.038	130	0.009	54
CO_2	4.413	15270	5.322	32495
Argon	1.429	4946	1.356	8282
N_2	83.830	290065	79.524	485603
O_2	1.114	3853	8.532	52076
H_2O	6.320	21868	4.632	28282
Totals	100	346015	100	610627
Total organics	1.25	4327	0.41	7.489

Organic reduction 42.5%

Combustion modules

Fuel 36.3 SCFM 97 lb/hr
Air 55342 SCFM

this waste water were evaluated. Waste water content is shown in Tables 3-5 and 3-6. Pollution control methods are evaluated in Section 4.

Incinerator Emissions

Incinerators at acrylonitrile plants burn hydrogen cyanide and acetonitrile, as well as product column bottoms (precursor streams 20, 21, and 25 and emissions stream 29). The data used in the Source Assessment Document were for incinerators in which waste stream 12, the absorber vent gas, is also incinerated. The major effluent problem that might arise from these incinerators is the formation of NO_x from the fuel nitrogen of the acetonitrile (stream 20) and hydrogen cyanide (stream 21). The streams to and from an acrylonitrile incinerator are shown in Table 3-7.

Reactor Startup Emissions

During startup, the reactor is heated to operating temperature before the reactants (propylene and ammonia) are introduced. During regular operation, effluent from the reactor is fuel rich and above the upper flammability limit (see stream 3, material balance, Table 3-3). However, during startup, the effluent stream from the reactor starts out oxygen-rich, and passes through the flammable composition zone before reaching the fuel rich zone.

In order to prevent explosions in the lines to the absorber, the oxygen-rich reactor effluent is vented to the atmosphere during startup. This effluent is high in reactant and product concentrations. It has been estimated that the acrylonitrile emission rate during startup exceeds 10,000 lbs/hr., shown in Table 3-8.

Stream composition varies continuously during the startup. Estimates in the Air Products Report are generally considered to be high.

TABLE 3-5. ACRYLONITRILE PLANT WASTE WATER[a] (Reference 1)

Material discharged	Concentration, mg/l	Effluent factor, g/kg
Raw waste water	-	4,470
Biological oxygen demand	8,620	38.7
Chemical oxygen demand	32,800	133
Total organic carbon	14,400	57.5
Total solids	36,700 to 57,800	163 to 182
Total suspended solids	184 to 630	0.915 to 1.78
Total dissolved solids	36,500 to 57,200	161 to 181
Oil and grease	135 to 168	0.475 to 0.657
Total nitrogen (as N_2)	4,040 to 22,000	16.9 to 62.1
Ammonia nitrogen (as N_2)	2,600 to 13,600	10.3 to 38.3
Nitrile nitrogen (as N_2)	197 to 270	0.755 to 0.97
Phosphate	0.152 to 6.15	0.0004 to 0.0298
Phenol	0.165 to 2.28	0.0007 to 0.0064
Sulfate	2,700 to 5,309	64.1 to 74.3
Zinc	0.052 to 2.1	0.00002 to 0.0092
Chloride	125 to 858	0.616 to 2.42
Iron	3.13 to 4.24	0.0088 to 0.0182
Copper	≤0.5	≤0.00024
Chromium	≤0.05	≤0.00014
Cadmium	≤0.05	≤0.00024

Other compounds which have been qualitatively identified include:[a]

Acetaldehyde	Methacrylonitrile	Ammonium acetate
Acrolein	trans-Crotonitrile	Ammonium methacrylate
Hydrogen cyanide	cis-Crotonitrile	Ammonium acrylate
Acetic acid	Allyl cyanide	Succinonitrile
Fumaronitrile	Benzonitrile	Acetone
Acrylic acid	Nicotinonitrile	Acetaldehyde cyanohydrin
Acrylamide	Malononitrile	Acetone cyanohydrin
Acrylonitrile	Furonitrile	Acrolein cyanohydrin
Acetonitrile	Ticoline	Pyrazole
Maleonitrile	Lutidine compounds	Methyl pyrazine
Organic polymers	Benzene	Cyanopyrazine
Propionitrile	Toluene	Pyrazine
Ammonium formate		

[a]Personal communication to T. Hughes, Monsanto, A. W. Busch, Regional Administrator, Region IV, U.S. Environmental Protection Agency, February 1974.

TABLE 3-6.

UNTREATED PROCESS WATER LOAD DISCHARGED TO DEEP WELLS
JANUARY 1, 1975 TO SEPTEMBER 30, 1976
TWO B PERMIT: WDW-100 & WDW-101 (2 WELLS) (Reference 7)

	DAILY GRAB SAMPLES			MONTHLY AVERAGES	
PARAMETER	MINIMUM	AVERAGE	MAXIMUM	MINIMUM	MAXIMUM
Flow (MGD)	0.26	0.49	0.68	0.41	0.49
pH (pH units)	5.4	N/A	9.2	N/A	N/A
BOD_5 (lbs/day)	18000	58000	156000	48000	74000
COD (lbs/day)	50000	148000	249000	120000	171000
TOC (lbs/day)	20000	61000	139000	49000	73000
TSS (lbs/day)	23	250	4000	65	500
TDS (lbs/day)	41000	169000	300000	130000	200000
NH_3 as N (lbs/day)	3900	17000	31000	14000	20000
TKN as N (lbs/day)	9400	35000	61000	27000	41000
Phenol (lbs/day)	1	17	46	12	22
Iron (lbs/day)	5	22	91	12	36
Molybdenum (lbs/day)	43	200	700	88	230
Nickel (lbs/day)	3	12	64	6	27
Sodium (lbs/day)	3000	6800	16000	4900	8600
Zinc (lbs/day)	<1	<1	6	<1	2
Arsenic (lbs/day)	0.03	0.06	0.25	0.04	0.09
Chromium (lbs/day)	0.03	0.44	20	0.07	1.35
Copper (lbs/day)	0.04	0.15	0.71	0.07	0.22
Sulfates (lbs/day)	8900	50000	140000	38000	67000
Cyanides (lbs/day)	290	1500	4900	1000	2100
Acetonitrile (lbs/day)	42	970	3400	490	1500
Acrylonitrile (lbs/day)	70	900	5400	300	1700
Phosphates (lbs/day)	<1	23	480	4	43

TABLE 3-7. STREAMS TO AND FROM INCINERATOR (Reference 8) (CATALYST 21)

Emission	Flow Rate to Incinerator	Flow Rate from Incinerator
From Absorber Vent:		
N_2	167,000 lbs/hr	336,000 lbs/hr
O_2	5,760	18,000
CO_2	6,790	36,500
CO	2,360	40
Methane	8.3	
Ethylene	57.5	
Ethane	23.2	
Propane	965.5	
Propylene	614.5	
Butene	22.3	
Acrylonitrile	2	
Acetonitrile	34	
HCN	14	
Allyl Alcohol	1.3	
Furan	22.3	
Benzene	7	
Toluene	4	
Water	38,200	
From Other Sources:		
HCN	625	
Acetonitrile	2,800	
Combustion Air	218,900	
Natural Gas	750	
NO_x (as NO_2)		30

Flow Rate	To Incinerator	From Incinerator
Uncertainties: individual	HC ± 25%	
	CO ± 6%	
	HC total ± 8%	

TABLE 3-8. STARTUP EMISSION STREAM (CATALYST 21)
(Reference 6)

Emission	Rate (lbs/hr)
Particulate	25
CO_2	1,593
CO	882
NH_3	392
Propylene	417
Propane	711
HCN	466
Acrylonitrile	10,221
Acetonitrile	319
Nitrogen and Argon	84,094
Oxygen	5,686
Water	3,726

However, these estimates were used to assess control methods since they are based on worst case assumptions.

The two to six acrylonitrile reactors at a plant are each shut down and restarted about four times a year; each startup lasts about one hour. Therefore, there are between eight and twenty-four startup emission incidents per year (References 1 and 6). Since these incidents are so frequent and the emissions are so large, control technologies were evaluated for these startup emission streams. The results are presented in Section 4.

3.2.3 Control Technologies

Table 3-9 summarizes the emission streams reviewed in this report and the control technologies currently in use. (Since most incinerators can be fitted with waste heat recovery devices, and several are currently in use on thermal incinerators at acrylonitrile plants, waste heat recovery devices for incinerators are not evaluated separately in this report.)

The absorber vent stream contains low molecular weight pollutants in a dilute stream of high N_2 and H_2O content (see Tables 3-4 and 3-7). Thermal and catalytic incinerators are in use for this stream and are further evaluated in this report. Since the hydrocarbons in this stream are primarily of lower molecular weight, carbon adsorption and hydrocarbon absorption are not economically feasible.

The startup emission stream has a high concentration of acrylonitrile (Table 3-8). The stream is of short duration and has a variable concentration. Flaring is a traditional method of dealing with intermittent hydrocarbon emissions, and it was evaluated for this stream. However, combustion of this stream could lead to 6,900 ppm NO_x emissions

TABLE 3-9. CONTROL TECHNOLOGIES FOR EMISSION STREAMS

Emission Stream	Control Technology	In Use
Absorber Vent	Thermal Incineration	Yes
Absorber Vent	Catalytic Incineration	Yes
Absorber Vent	Carbon Adsorption	No
Absorber Vent	Hydrocarbon Absorption	No
Startup Stream	Thermal Incineration	No
Startup Stream	Catalytic Incineration	No
Startup Stream	Flare	No
Starup Stream	Carbon Adsorption	No
Startup Stream	Solvent Absorption	No
Holding Pond	Carbon Adsorption of Effluent on Way to Pond	No
Holding Pond	Solvent Extraction	No
HCN and Acetonitrile Incinerators	2-Stage Combustion	No

if 100 percent fuel nitrogen conversion occurred. Even 20 percent fuel nitrogen conversion would lead to 1,300 ppm NO_x. Consequently, combustion methods are considered unsuitable for this stream.

Carbon adsorption was also evaluated for the startup stream. The stream is quite concentrated, consequently carbon adsorption might be used after water scrubbing. Further study of a combination of water scrubbing followed by carbon adsorption is recommended.

If the startup emission stream could be sent to the absorber (which is basically a wet scrubber) the emissions from the stream could be reduced, and further cleanup would not be required. However, this is not possible because of the flammability problem caused by the mixture of fuel rich and oxygen-rich streams in the lines to the absorber.

Hydrocarbon absorption of the startup emission stream is also possible. However, disposal of the spent hydrocarbon could be a problem. This hydrocarbon would have a high nitrogen content, making it potentially unsuitable for burning in a waste-heat boiler. Therefore, further study of hydrocarbon absorption was not undertaken for this stream.

Since hydrocarbon emissions from the holding pond are high, carbon adsorption of the effluent on the way to the pond might be used to reduce the hydrocarbon content of the pond.

Two patents for hydrocarbon absorption treatment of nitrile waste waters were also reviewed. One describes a process change of acrylonitrile plants that would greatly reduce the acrylonitrile waste water emissions. The other describes solvent extraction of the waste water. These patents are reviewed in Section 4.6.

3.3 MONTEDISON PROCESS

Montecatini Edison makes acrylonitrile in a process similar to the SOHIO process, except that a tellurium, cerium and molybdenum catalyst is used (Reference 9). The process and emissions are not significantly different. Chemical and biological treatment of the waste water, rather than deep well injection are used. A further study of Montecatini's waste water treatment techniques should be undertaken, with the intent of eliminating the holding ponds as a source of air emissions.

SECTION 4

ALTERNATE CONTROL METHODS

4.1 INTRODUCTION

This section discusses control methods currently in use and those proposed for use in the acrylonitrile industry. The operation of each control method and the waste streams suitable for each are described. Then the technical feasibility of each control method is evaluated. (Secondary pollutant formation, large energy requirements, or other problems might eliminate a control method from further consideration.)

After identifying the best control method for a particular waste stream, this section describes the efficiency, cost, reliability, and energy requirements for that method. (Section 5 discusses the available demonstration opportunities for single and combined control technologies.)

Combustion processes for waste gases and liquids are discussed first (Sections 4.2, 4.3 and 4.4) because they are currently in use at acrylonitrile plants. Waste heat recovery is also reviewed in these sections. Problems with existing incinerator processes (e.g., the possibility of high NO_x production and the lack of control devices for the startup stream) are also discussed. Carbon adsorption and hydrocarbon absorption processes, which are not currently used at any acrylonitrile plant, are presented in Sections 4.5 and 4.6.

4.2 FLARES

4.2.1 Technical Description

A flare is a diffusion flame, open to air, used as an inexpensive method to dispose of temporary and suitable gaseous effluent without heat recovery. Because a flare is capable of handling moderately large changes in flowrate, it is typically used during system upsets and startups. (In contrast, incinerators are designed for a specific, regulated volumetric flowrate, commonly with heat recovery.) Flares can be classified into two groups: elevated and low-level. Elevated flares are used for the periodic combustion of high flowrate gases (1,000,000-2,000,000 lb/hr); whereas low-level flares, often located at ground level, are used for the disposal of low, continuous flow gases (80,000 to 100,000 lb/hr) (Reference 10). Knockout drums, installed in the flare feed stream, prevent liquid carryover into the flare, and natural gas pilot burners act as a continuous ignition source. Adequate combustion of low Btu effluent (less than 200 Btu/ft^3) requires the use of supplemental natural gas. Depending on the duration of firing, this may represent a substantial operating cost. Flame luminosity and particulate formation can be reduced by injecting steam into the flare. Steam is usually controlled manually to minimize its consumption.

Carbon monoxide, unburned hydrocarbons, particulates, NO_x, and SO_x are all potential flare pollutant emissions. The air/fuel ratio, the flame temperature, the amount of steam injection, the effluent composition, and the design of each specific flare determine the quantity of pollutants. Unfortunately, due to sampling difficulties, there is little data available on flare performance. (Sampling requires insertion of a probe into a very unsteady, tall plume. This is difficult to

accomplish with precision and accuracy.) Nonetheless, manufacturers routinely claim that flares are capable of combusting 90 percent of the hydrocarbons (Reference 6).

Flares are also a potential noise problem. Noise intensity depends on the square of the exit velocity of the gas stream and on the properties of the particular gas. With proper design, noise can be adequately reduced to meet OSHA regulations (i.e., 90 dBA for 8 hours exposure). Despite these drawbacks, flares are an effective low-cost method for reducing transient gaseous emissions.

4.2.2 Suitable Waste Streams

In an acrylonitrile plant, two flares are designed into the system for use during emergencies as back-up emission control devices. The HCN flare burns any HCN vapors not removed by water scrubbers from the HCN storage bin and railroad car loading procedure. The acrylonitrile flare receives vapors from the top of the stripping and HCN columns if emergency release of pressure relief valves occurs. (The Hydroscience Trip Report states that the emergency valves venting to the acrylonitrile flare have not been tripped in seven years (Reference 7).) Since these flares seem to be performing satisfactorily, no further evaluation was conducted.

During reactor startup, gaseous effluent from the reactor is vented directly to the atmosphere. Although this condition is temporary and occurs only four times a year (per reactor), this one hour procedure releases a substantial quantity of pollutants. Because this startup stream is characterized by rapid concentration and flowrate changes, it is quite suitable for control by flaring. The potential difficulty is that large quantities of NO_x might be formed. This startup stream is

described in Table 3-8 and compared with steady state flow from the absorber vent in Table 4-1.

4.2.3 Technical Feasibility

During startup operation, the reactor gaseous effluent bypasses the absorber and is vented into the atmosphere. The vented gaseous stream is 10 percent higher in mass than the normal absorber vent stream. This additional flow is primarily an increase in acrylonitrile output to 10,221 lb/hr, and to a lesser extent, increases in NH_3, HCN, and acetonitrile. (Table 3-8 describes this stream.) Table 4-1 compares the vented gaseous stream to the normal absorber vent gas flow. Flares can be designed to handle this volume of gas; however, the high acrylonitrile content may lead to high NO_x emissions. This problem will exist for the startup streams with any combustion method.

4.2.4 Efficiency, Cost, Reliability, and Energy Requirements

Flares are designed to oxidize over 90 percent of the hydrocarbon pollutant. Due to the low Btu content of the startup effluent stream (calculated at 131 Btu/ft^3), it would be necessary to use supplementary natural gas -- around 0.016 cubic feet of natural gas per cubic foot of effluent (Reference 11).

Combustion of the reactor startup effluent, which is high in fuel nitrogen, could produce a considerable amount of NO_x. NO_x formation is a strong function of flame temperature and the extent of fuel/air premixing. Forty to ninety percent of the fuel nitrogen can potentially form NO_x (Reference 12). Complete conversion of fuel nitrogen into NO_x would yield a concentration of 29,220 ppm NO_x effluent, or

TABLE 4-1

COMPARISON OF START-UP AND CONTINUOUS FLOW GAS STREAMS (CATALYST 21) (Reference 6)

Combustibles:

	Continuous		Start-up	
Component	lb/hr	Weight Percent	lb/hr	Weight Percent
CO	1,498	1.5	882	.81
Ammonia	0	0	392	.36
Propylene	470	.48	417	.38
Propane	740	.76	711	.65
Hydrocyanide	6	--	466	.43
Acrylonitrile	3	--	10,221	9.42
Acetonitrile	80	.08	319	.29
TOTAL	2,803		13,408	

Noncombustibles:

Particulate	TR	--	25	.02
CO_2	4,171	4.26	1,593	1.47
N_2	81,339	83.10	84,094	77.48
O_2	966	.99	5,686	5.24
H_2O	8,598	8.78	3,726	3.43
TOTAL	95,074		95,124	

Total Flow:	97,877	108,532

3,370 lb NO_x per hour (per reactor) -- considerably above allowed emission standards (see Appendix B for calculations). However, this high NO_x emission might be preferable to the present 10,221 lb/hr acrylonitrile output during startup. The health hazards of such trade-offs should be assessed.

The capital cost of a flare system capable of handling the startup effluent stream is approximately $20,000 including control equipment, but not including the site specific installation costs, which may be equally high.

Approximately 25,000 scf of natural gas (900 Btu/ft^3) are required to fire the flare for one startup (Appendix B). At about $0.25/lb acrylonitrile, the cost of the flared acrylonitrile would be $2,500.

Because the increased reactor flowrate during startup is only 10 percent higher than during normal operation, it may be possible to burn the reactor startup effluent in the existing incineration equipment used for the gaseous absorber effluent. This would require supplementary monitoring of the incineration during startup with probable modification of fuel/air mixture and temperature to accommodate the different gaseous compositions and flowrate.

4.2.5 Conclusions

Although startup occurs infrequently, it is necessary to implement a method capable of reducing the exceedingly high acrylonitrile emissions during this procedure. Flaring is a reliable approach capable of handling large concentration changes typical of the reactor startup streams. Although it has a low capital cost, a flare would require supplementary fuel and could produce a large amount of NO_x.

High NO_x emissions due to acrylonitrile combustion are a potential problem for any combustion method used to control emissions of the startup stream. Research into the health trade-offs of high acrylonitrile emissions vs. high NO_x emissions could be performed to provide information for evaluating flares. Such research, however, is not recommended. Instead, low NO_x emission control technologies for the startup stream are recommended in Section 4.6.

4.3 THERMAL INCINERATION

4.3.1 Technical Description

A thermal incinerator is an enclosed system in which waste gases are pyrolyzed and then oxidized. Hydrocarbons and carbon monoxide in the gases oxidize to carbon dioxide and water. The incinerator is often fired with supplemental fuel and air since the waste stream will usually not support a flame by itself. Indeed, more Btus are usually supplied by the added fuel than by the waste gas stream. Heat exchangers are frequently added to incinerator systems to recapture energy.

Incinerators usually operate continuously, rather than intermittently. Constant thermal cycling of the incinerator would shorten its life expectancy, due to increased cracking of the refractory lining.

Incinerators are designed to provide for adequate temperature, retention time and turbulence for complete oxidation of the waste gas fume. Temperature and retention time are coupled variables. Low temperatures and long retention times will achieve the same degree of control as high temperatures and short retention times (Figure 4-1). Temperature profiles through the incinerator are very important, since many reactions take place downstream of the flame front and these reactions occur rapidly only at high temperatures.

Turbulence and the extent of premixing of fuel and air are also important in promoting rapid oxidation reactions. By increasing turbulence and premixing, the chance for a pollutant molecule to come into close contact with an oxidizing species is increased. Modern incinerator designers have discovered that the amount of turbulence can be rate determining and that shorter residence times and less supplementary fuel are needed for incinerators with high turbulence (Reference 13).

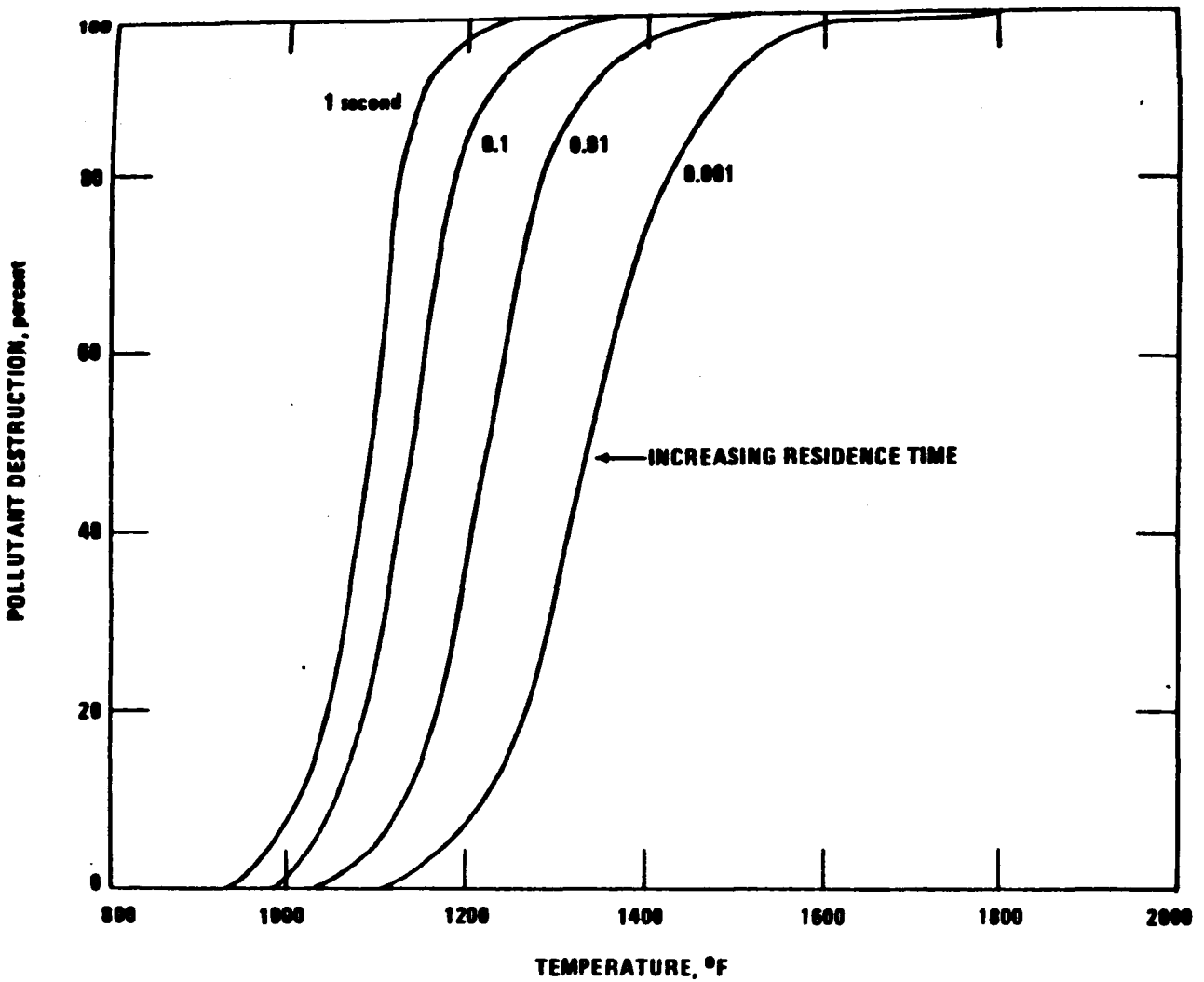

Figure 4-1. Coupled Effects of Temperature and Time on Rate of Pollutant Oxidation

(Reference 14)

Turbulence is controlled by burner, nozzle, baffle, and air flow arrangements, and tangential fume entry.

A simple fume incinerator is illustrated in Figure 4-2. Air and gas enter on one side, with fumes admitted tangentially, below the flame front. Tangential admission of the fume and a refractory baffle ring promote turbulence. The fire box is lined with refractory and insulated to ensure a sufficiently high temperature. The size of the fire box guarantees a sufficiently long residence time for complete incineration. Newer designs promote even better mixing and carefully control the excess air requirements, which can reduce operating costs by 20 to 30 percent (Reference 13).

Special purpose incineration systems are designed to meet specific needs. Two types of special purpose incineration systems may be useful for acrylonitrile plants; these are the rich fume incinerator and the low NO_x incinerator.

Rich fumes are fumes which do not contain enough oxygen for combustion. Careful incinerator design is needed to handle these fumes; the additional air dilutes the mixture, and lowers the overall temperature. Rich fume incinerators differ from ordinary incinerators chiefly in the careful attention given to addition of air for firing (References 15 and 16). Since the absorber vent gas is oxygen-depleted, rich fume incinerators were briefly evaluated for use on this pollutant stream. However, rich fume incinerators are designed for use on very concentrated hdyrocarbon streams; so they are not appropriate.

Low NO_x incineration is a two-stage combustion process: fuel rich combustion followed by fuel lean combustion. Figure 4-3 shows a diagram of this process. The first stage is a reduction furnace in which

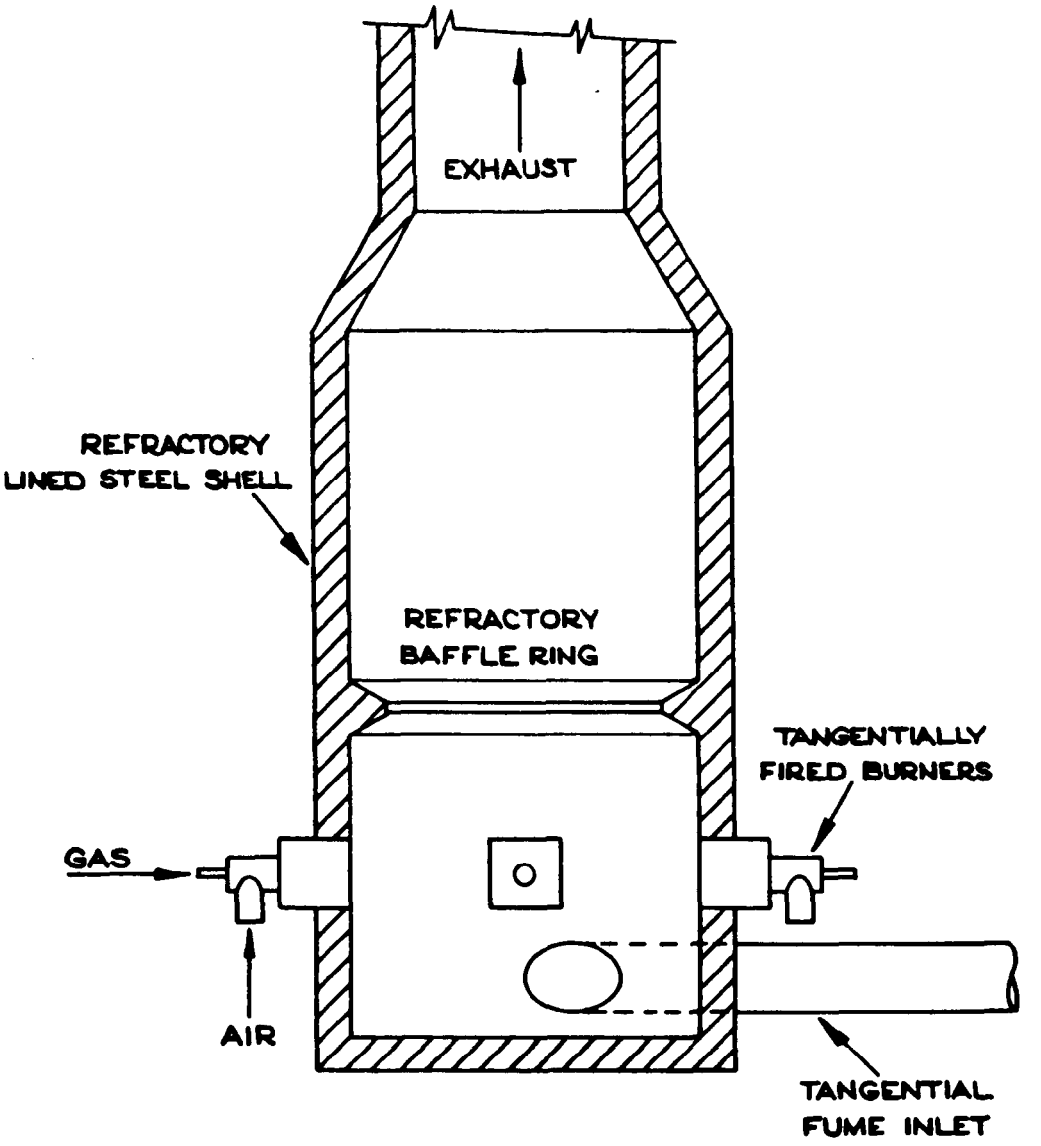

Figure 4-2. Direct-Fired Afterburner with Tangential Burner Arrangement (Reference 13)

WASTE CATEGORY	EXAMPLE	PRODUCTS OF OXIDATION
GAS	NH_3	FG, NO_x
LIQUID	NITROSAMINE	FG, NO_x

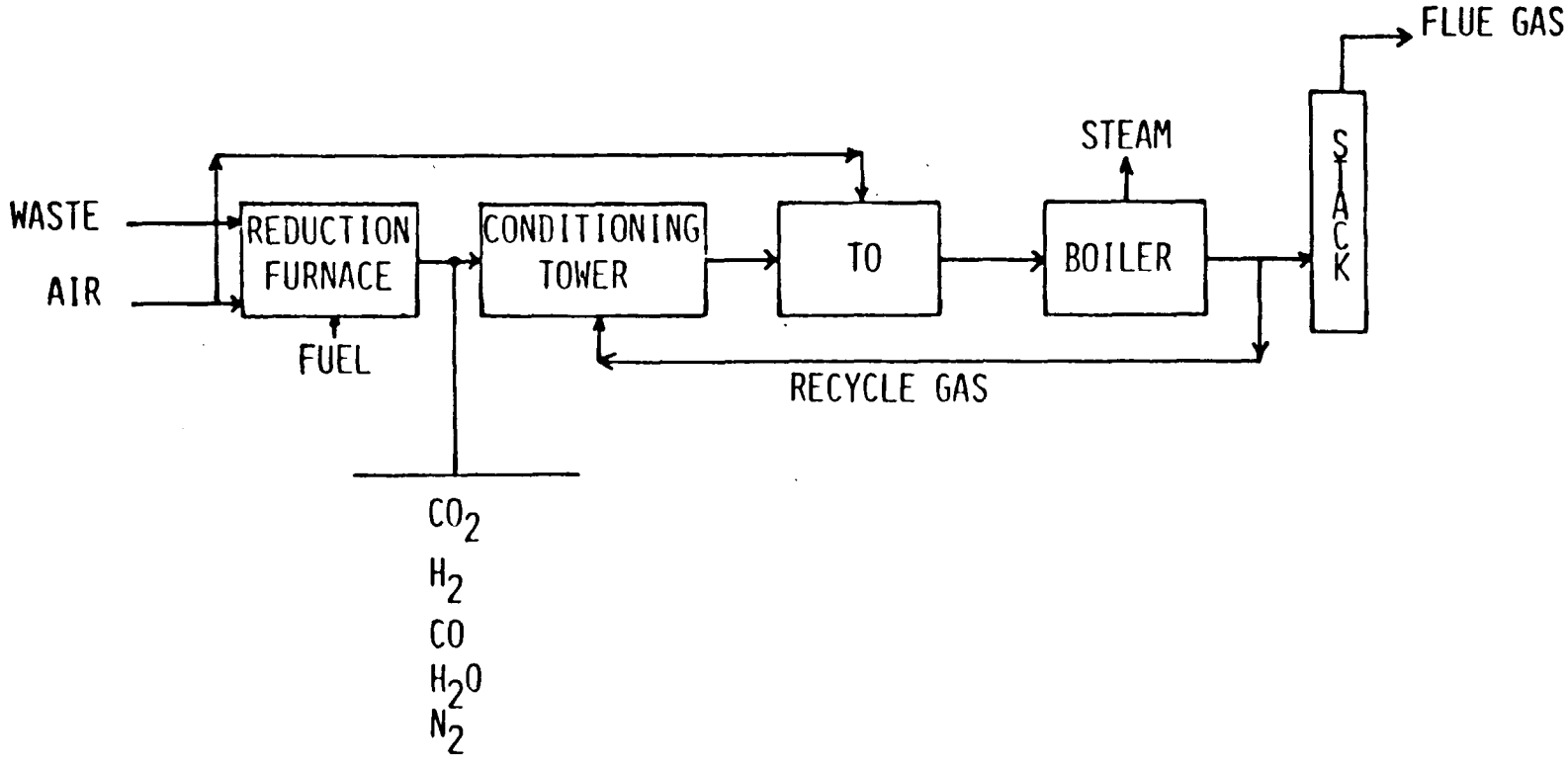

Figure 4-3. Low NO_x Emission Incineration

(Reference 17)

a high temperature reducing environment (less than stoichiometric air) converts fuel nitrogen to N_2 and the supplemental fuel to water gas. The quench section cools the water gas to approximately 1400°F, by directly contacting it with recyle gas. A Thermal Oxidizer (TO) next converts the H_2 to H_2O and CO to CO_2. A heat recovery boiler then produces steam in cooling the flue gas to 350°F and is followed by an unlined vent stack. Recycle gas cooling, not the use of air, steam or water, is an integral part of this process to minimize NO_x formation and maximize heat recovery.

Rich fume incinerators are not useful for acrylonitrile plants; further evaluation of low-NO_x incinerators is recommended in Section 5. The rest of this section will evaluate traditional incineration only.

4.3.2 Suitable Waste Streams

Thermal incinerator use has been evaluated for three waste streams:

1. HCN, acetonitrile and absorber vent off-gas streams currently combined and sent to a thermal incinerator at an acrylonitrile plant (Table 3-7).
2. Absorber vent off-gas streams described in Hydroscience Trip Report (Table 3-4).
3. Startup emission stream described in Volume 2; Air Products Report (Table 3-8).

Incinerators are not considered reasonable choices for the waste water effluent stream on the way to the deep well pond.

4.3.3 Technical Feasibility

The first step in assessing feasibility for a control method is to determine that the method:

- Is efficient in eliminating the pollutants in question
- Does not form unacceptable amounts of a secondary pollutant

This evaluation is especially important for assessments of combustion methods for nitrogen-containing waste streams. For these streams, the potential for NO_x formation must be evaluated.

The degree of conversion of fuel nitrogen to NO_x depends upon:

- The form of the nitrogen in the fuel
- The percent of fuel nitrogen in the fuel
- The equivalence ratio (excess air) in the combustion chamber*
- The amount of mixing of air and fuel
- The temperature and residence time of the combustion system

Many experiments on fuel nitrogen conversion to NO use ammonia as a source of fuel nitrogen. The sources of fuel nitrogen in the incinerators in use at acrylonitrile plants are hydrogen cyanide and acetonitrile. Acetonitrile and hydrogen cyanide both contain the C - N bond, and it is assumed that they react similarly during combustion. However, these cyanide-containing molecules would not be expected to follow the same reaction paths as ammonia. The ammonia reacted in the flame front; some of the hydrogen cyanide reacts downstream. (Figure 4-4, Reference 18). Since ammonia and hydrogen cyanide show similar overall conversion to NO during combustion, the results of experiments performed with ammonia are assumed to be applicable to direct flame incineration of hydrogen cyanide and acetonitrile, providing there is a sufficient residence time at post flame-zone temperatures.

---

*The equivalence ratio, ϕ, is defined as $\left(\frac{fuel}{air}\right)_{actual} \Big/ \left(\frac{fuel}{air}\right)_{stoichiometric}$

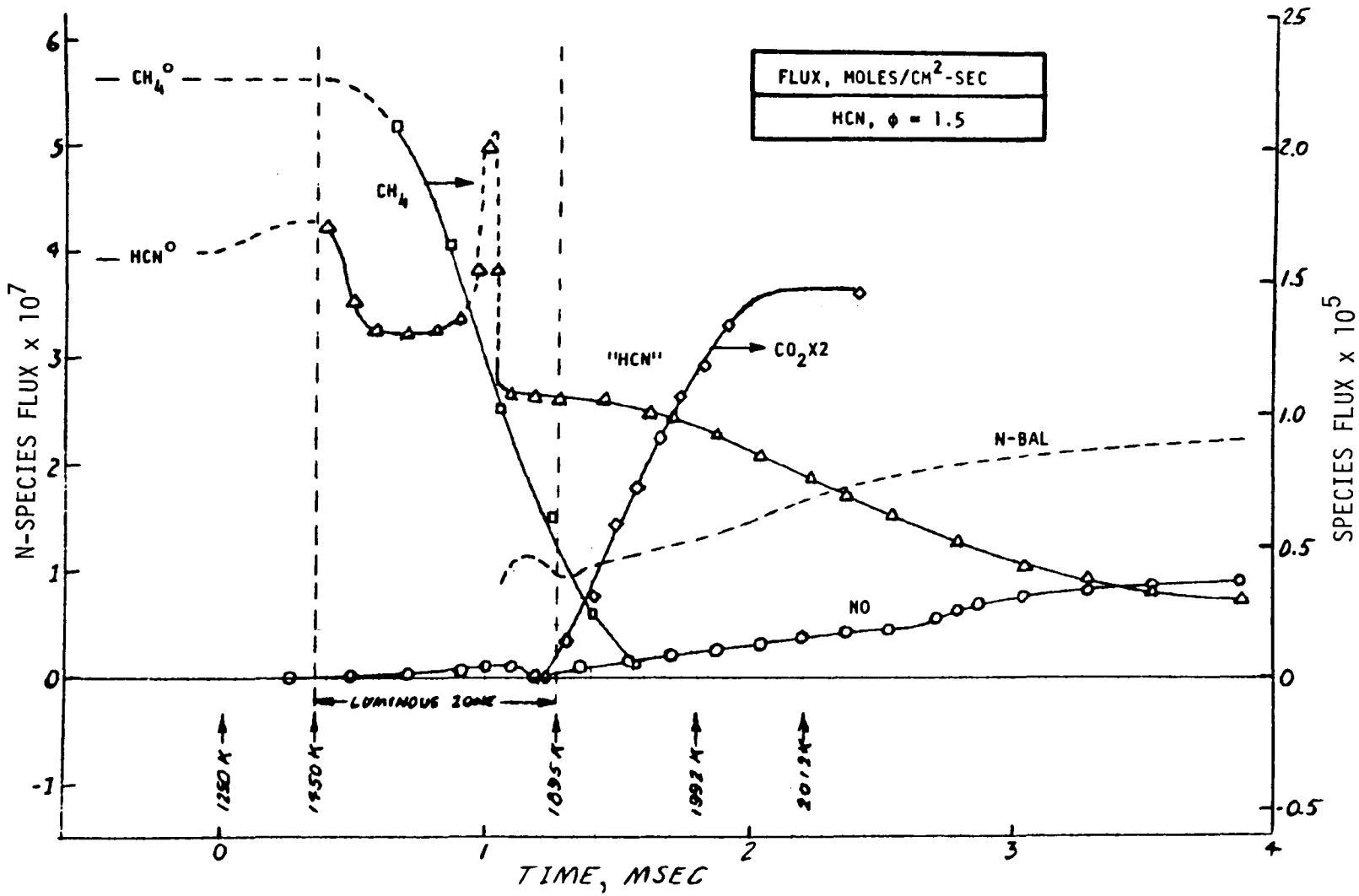

Figure 4-4. Species Flux vs. Time, Flame 3, HCN Addition with an Equivalence Ratio of 1.5 Flux Mole/am^2-Sec, Nitrogen Species at Left, Carbon at Right Flux Units of Graph. (Reference 18).

These NO conversion experiments (Reference 18) were performed with premixed flames near their adiabatic flame temperature (1700°C). The incinerators at acrylonitrile plants are thermal oxidizers; the pollutants are oxidized at temperatures below 900°C. The amount of NO which would be formed from hydrogen cyanide and acetonitrile in these temperature ranges is uncertain (Reference 19), but is expected to be substantially lower.

Figure 4-5 shows the effect of equivalence ratios on NO yield. The dashed line shows the change in NO yields from 10 percent to 65 percent with changing equivalence ratios. Homogeneous conversion processes are also sensitive to changes in the fuel nitrogen content. (References 18 and 20).

The absorber vent gas (stream 2) currently sent to a catalytic incinerator (Table 3-4), contains 42.8 lbs/hr of fuel nitrogen, which would yield 130 lbs/hr of NO_x (240 ppm -- weight) with 100 percent conversion. At conversion rates of 10 to 60 percent, this would be 24 to 144 ppm NO_x. Based on this analysis, showing acceptable NO_x production rates, thermal incineration seems appropriate for this stream.

The hydrogen cyanide, acetonitrile, and absorber vent gas streams Stream 1 (Table 3-7) are currently incinerated. Assuming all fuel nitrogen is converted to NO_x, 4361 lbs NO_x/hr could be expected or 9000 ppm (weight) of NO_x. However, the exit stream was measured at 30 lbs/hr of NO_x, or 67 ppm (weight) NO_x. This is equivalent to a 0.68 percent conversion to NO_x. For fuel lean combustion, the examples from the literature imply 5 to 60 percent conversion to NO_x, a ten-fold to one hundred-fold difference. This discrepancy cannot be resolved without detailed information on the internal temperature-time profile within the

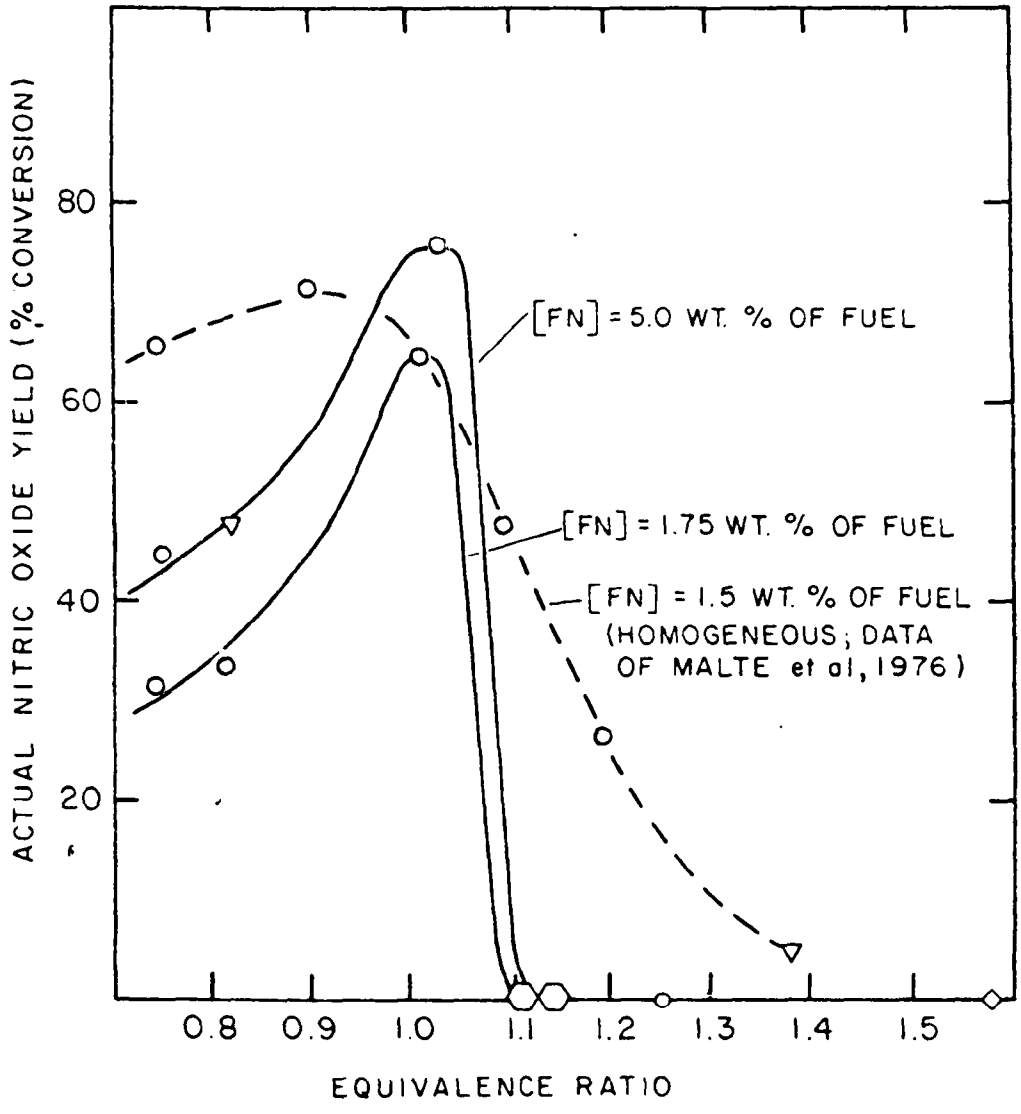

(Note: ϕ is greater than one for fuel-rich combustion)

Figure 4-5. Comparison of the Relationship of Equivalence Ratio and NO yields Between Catalytic Combustion (solid curves) and Homogenous Reaction (dashed curves). Ammonia Addition.

(Reference 20)

incinerator. Without such information, this low conversion rate is assumed to be correct. Further research on the topic is recommended in Section 5.

Stream 3, the startup stream, described in Table 3-8, could yield 19,619 lbs NO_x/hr, with 100 percent fuel nitrogen conversion. If this stream were sent to one of the HCN incinerators used on stream 7 and only 0.6 percent conversion occurred, 268 ppm NO_x (weight) would be expected. This would be 100 times as great for 60 percent conversion. The NO_x emissions from combustion of this stream are potentially high, and incineration is not a suitable method for control of this stream. (Section 4.2 also discusses combustion of this stream.)

4.3.4 Efficiency, Cost, Reliability, and Energy Requirements

Theoretical efficiency of thermal incineration for degradation of hydrocarbons and CO is very high. Incinerators that do not go through frequent thermal cycling are quite reliable. Incinerator reliability has been aided by heat sensitive paint. When the outside temperature of an acrylonitrile plant incinerator becomes high, above 500°F, the paint at that spot becomes lighter in color, until at 750°F it is white. This assists in locating cracks in the refractory lining (Reference 21).

For an incinerator burning stream 1 (hydrogen cyanide, acetonitrile, and absorber off-gas), capital cost was $3.8 million dollars in 1976, without heat recovery (Reference 22). Heat recovery could be expected to add 20 to 40 percent to the cost (Reference 23). This incinerator requires 148 MBtu/hr of supplementary fuel. If there is 50 percent heat recovery, the net energy requirement would be 74.4 MBtu/hr. (This incinerator handles the very dilute absorber off-gas stream. If the incinerator handled only the liquid waste stream, the energy requirement would be lower.)

For an incinerator burning stream 2 (absorber off-gas only), capital cost estimates are $800,000 to $1,000,000 without heat recovery and up to $1,400,000 with heat recovery. Because the design would have to be unique (standard incinerators are much smaller), this estimate is probably low (Reference 23). This incinerator requires 128 MBtu/hr of supplementary fuel. If there is 50 percent heat recovery, the net energy requirement would be 64 MBtu/hr (Reference 23).

4.3.5 Conclusion

Thermal incineration is inappropriate for stream 1, the hydrogen cyanide - acetonitrile waste streams. Lower-than-expected NO_x emissions are observed from these incinerators. Further investigation of this phenomena and of the suitability of low - NO_x incineration for this stream is recommended. Thermal incineration is appropriate for stream 2 (absorber vent gas stream) for which NO_x emissions are not a problem. No combustion methods are suitable for stream 3, the reactor startup stream, because of the high NO_x emission potential. No further investigation of combustion methods for this stream is recommended, except investigation of routing it to a low NO_x incinerator, if one were installed for the HCN stream.

4.4 CATALYTIC INCINERATION

4.4.1 Technical Description

In catalytic incineration, pyrolysis and subsequent oxidation of waste gases occurs on a catalytically active surface in an enclosed system. Catalytic incinerators usually operate at a lower temperature and with much less supplementary fuel than thermal incinerators. The catalyst itself degrades in time and needs replacement. These systems are designed for a certain hydrocarbon flowrate, and unburned hydrocarbon may pass through when this flowrate is exceeded. A diagram of a catalytic afterburner suitable for hydrocarbon abatement is shown in Figure 4-6. A schematic of a catalytic abater in use at an acrylonitrile plant is shown in Figure 4-7. Catalytic incinerators can be designed with or without heat exchangers, as shown in Figure 4-8.

Important parameters in the design of catalytic incinerators are the temperature, residence time, air/fuel ratio, fuel and waste stream passthrough rates, choice of catalyst metal (usually precious metals), and expected catalyst degradation rates.

Catalytic incinerators are often chosen in preference to thermal incinerators in order to lower thermal NO_x output, as well as save fuel. In the temperature range around 1400°C, nitrogen and oxygen in the air react to form "thermal NO_x". Thermal incinerators operate in this temperature range and potentially have thermal NO_x problems. Catalytic incinerators usually operate below 1000°C at temperatures where thermal NO_x does not form. However, incinerators at acrylonitrile plants may have fuel NO_x problems. The relationship between thermal incineration and fuel NO_x is discussed in Sections 4.3.2 and 4.3.3. The

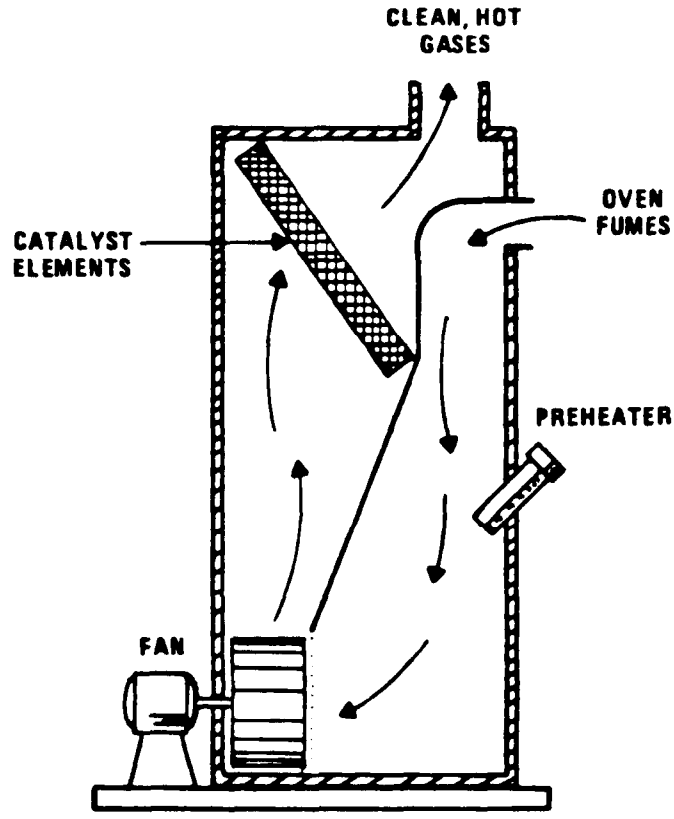

Figure 4-6. Schematic Diagram of Catalytic Afterburner Using Torch-type Preheat Burner with Flow of Preheater Waste Stream Through Fan to Promote Mixing

(Reference 14)

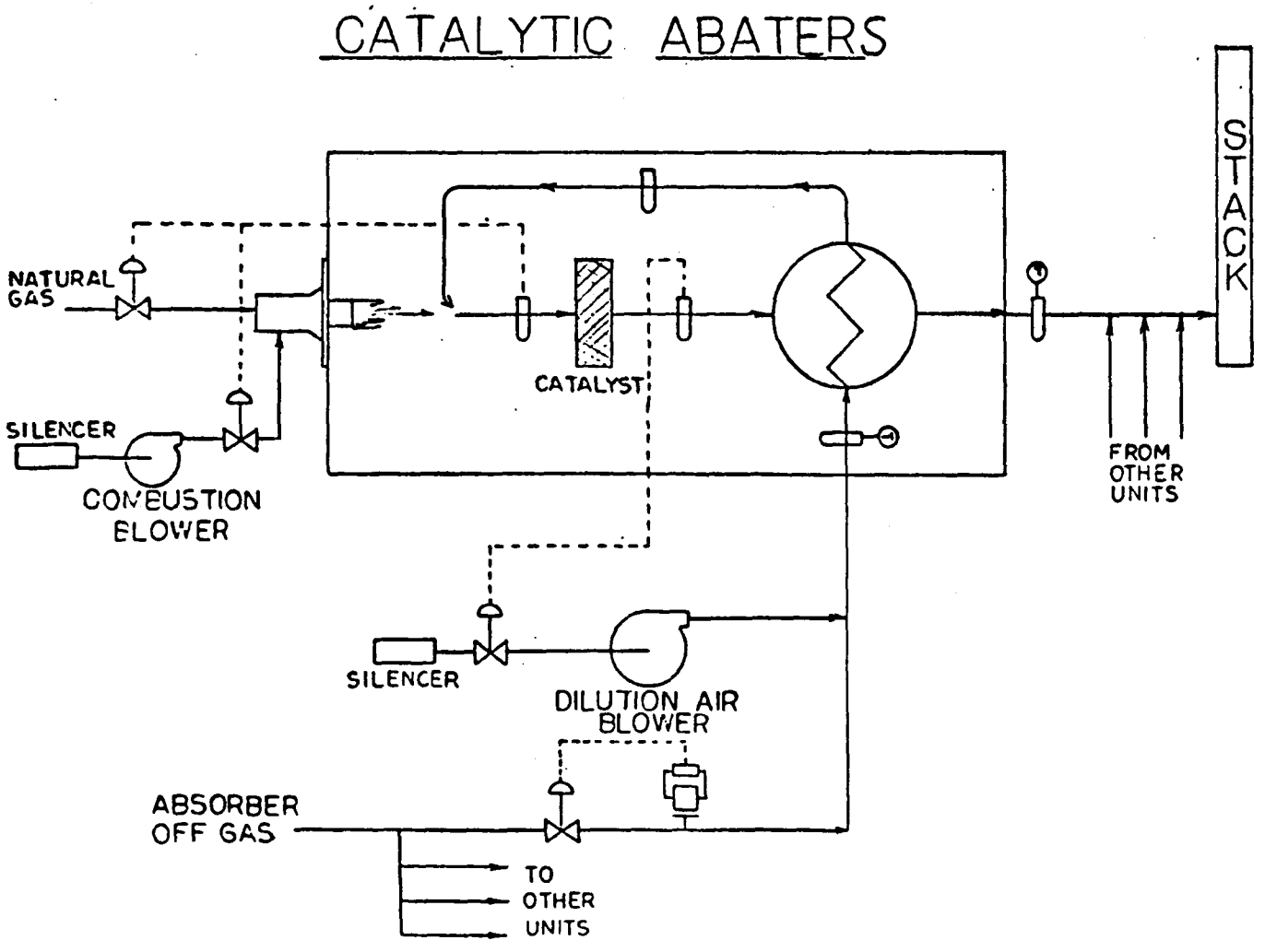

Figure 4-7. Schematic of a Catalytic Abater in Use at an Acrylonitrile Plant. (Reference 7)

Basic Catalytic System

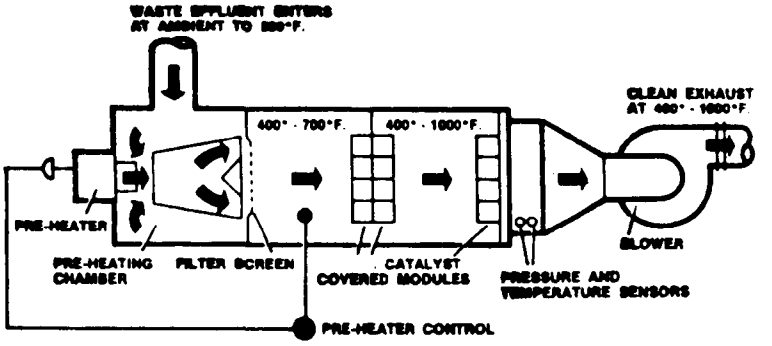

Contaminated exhaust enters the unit and is preheated to the selected temperature for optimum catalytic reaction. A filter screen traps large non-combustible particles and provides a burn-off surface for captured lint and char. The hot, filtered effluent enters the reaction chamber and passes through the catalyst-coated modules where rapid oxidation of hydrocarbons occurs. The clean, hot exhaust then can be vented to atmosphere or recycled to process.

Heat exchanger added to supply fresh process air

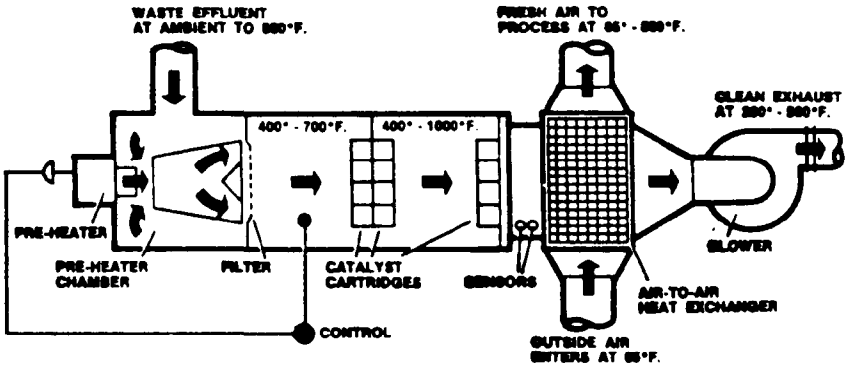

Adding the optional air-to-air heat exchanger yields important heat recovery benefits. Heat from the clean, hot exhaust is transferred to incoming fresh air for space heating or process purposes.

Heat exchanger added for maximum fuel economy

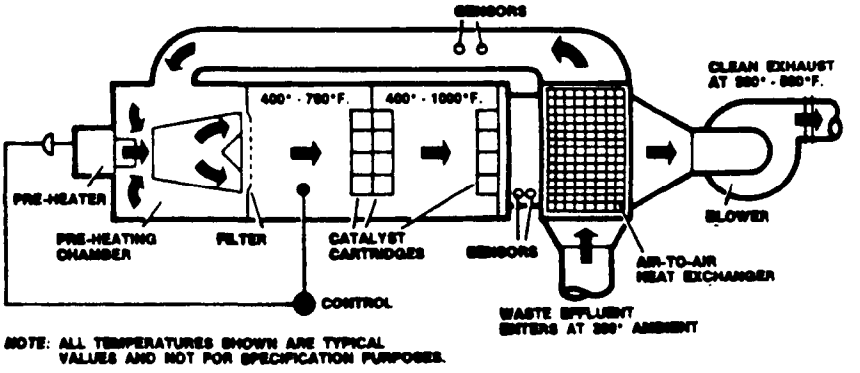

The heat exchanger transfers heat from the reactor exhaust to the incoming effluent, raising the waste gas temperature as much as 400°F. The pre-heating requirement is thus reduced — or eliminated completely. Resultant fuel savings can reach 90%, compared to conventional incinerators.

Figure 4-8. Catalytic Incinerator (Reference 24)

relationship between catalytic incineration and fuel NO_x will be discussed in detail in Section 4.4.3.

The discussion of catalytic incineration will focus on information from a catalytic incinerator currently in use at an acrylonitrile plant. It is assumed that optimization of all parameters for catalytic incineration are incorporated with the existing incinerator (Table 3-4). Development of low fuel NO_x catalytic incineration is discussed in Section 5.

4.4.2 Suitable Waste Streams

The waste streams for which thermal incineration were evaluated are also logical candidates for catalytic incineration. These streams were:

1. HCN, acetonitrile, and absorber vent off-gas streams currently combined and sent to a thermal incinerator (Table 3-7)
2. Absorber vent off-gas stream sent to a catalytic incinerator which was described in the Hydroscience Trip Report (Table 3-4)
3. Startup emission stream (Table 3-8)

Since the data for stream 2 were detailed and specific, they were evaluated first. Conclusions about the suitability of catalytic combustion for streams 1 and 3 were derived from that detailed evaluation.

4.4.3 Technical Feasibility

Data for stream 2, the absorber vent gas, were studied first (Table 3-4). This is a dilute pollutant stream, characterized by low molecular weight compounds and carbon monoxide. Combustion methods are appropriate for this stream because only 240 ppm (weight) NO_x emissions would occur if there were 100 percent fuel nitrogen conversion (Section 4.3). However, the reduction of organic compounds after passing

through the catalytic abater is only 42.5 percent (Reference 7), which implies that the abater is not well suited for this use from a hydrocarbon abatement efficiency standpoint. Consequently, consideration of NO_x emissions is secondary.

Stream 1, the currently incinerated hydrocarbon cyanide and acetonitrile stream (Table 3-7) and stream 3, the startup emission stream (Table 3-8), have the potential for significant NO_x pollution problems with combustors described in Sections 4.2 and 4.3. The use of a catalytic combustor is not expected to reduce the fuel nitrogen conversion problem. As illustrated in Figure 4-5, fuel nitrogen conversion to NO_x in a catalytic abater ranges from 20 to 80 percent as does fuel nitrogen conversion in a homogenous system, but the conversion in a catalytic abater is much more sensitive to the fuel-oxygen (equivalence) ratio. Figure 4-9 illustrates that the conversion rates are independent of adiabatic flame temperature and are dependent on fuel nitrogen content.

Figures 4-5 and 4-9 show that fuel rich catalytic combustion gives low NO_x yields from fuel nitrogen, while lean combustion can give very high (up to 80 percent) NO_x yields. Unfortunately, fuel rich catalytic combustion would accentuate the already-existing unburned hydrocarbon passthrough problem. Consequently, catalytic incineration is not appropriate for these streams because it would either produce high NO_x content (for lean combustion) or high unburned hydrocarbon (for rich or near-stoichiometric combustion).

Two-stage (fuel rich followed by fuel-lean) catalytic combustion might be appropriate for this stream. Such methods are currently under development, and review of their potential is recommended in Section 5.

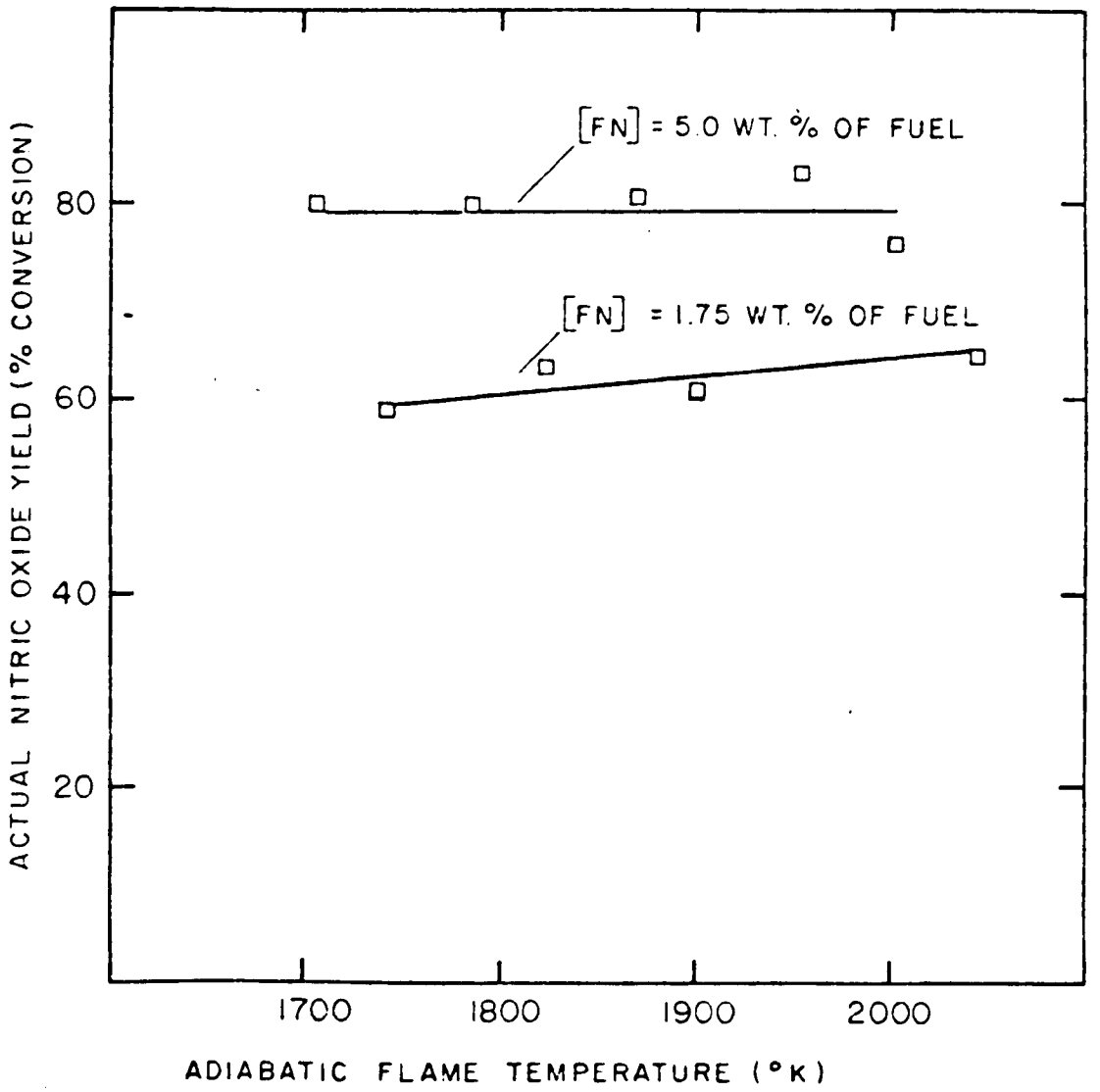

Figure 4-9. Effect of the Adiabatic Flame Temperature on the Conversion of NH_3 to NO for Two Fuel-N Concentrations at ϕ = 1.03, (Slightly Fuel-rich) Catalytic Combustion. (Reference 20)

4.4.4 Efficiency, Cost, Reliability, and Energy Requirements

Catalytic inefficiency for hydrocarbon reduction, and the potential for high fuel-nitrogen conversion to NO_x have eliminated catalytic combustion from further detailed consideration. The initial cost of the abaters for stream 2 ($6,800,000 in 1976) was quite high (Reference 7), and catalyst replacement is also expensive.

4.4.5 Conclusion

Traditional catalytic fume abatement is not suitable for use at acrylonitrile plants. Two-stage catalytic abaters currently under development might be suitable for the high fuel NO_x streams. Further evaluation of the potential of these systems is recommended in Section 5.

4.5 CARBON ADSORPTION

4.5.1 Technical Description

Carbon adsorption is a technique used to remove organic compounds from either liquid or gaseous streams. The organic impurities physically (and reversibly) adsorb in multilayers on the carbon surface without chemical reaction. Effective adsorption requires a highly porous material with extremely high surface area per unit mass.

Carbon adsorbent beds with high surface areas (over $1000m^2/gm$) are used to adsorb large quantities of organic compounds from effluent gas streams (up to 70 lbs organics/100 lbs carbon). Carbon adsorption is a suitable cleanup method for effluent streams with organic pollutant concentrations ranging from a few ppm to one percent (Reference 24). Water streams containing high molecular weight hydrocarbons can be effectively scrubbed by carbon adsorption. However, the technology description and evaluation in this report center on the use of carbon adsorption for gaseous pollutant streams.

Carbon adsorption is a suitable method for gaseous pollutant control when the effluent:

1. Flowrate and concentration fluctuate (or when they are stable)
2. Contains dilute concentrations of pollutants up to one percent
3. Contains valuable organics which can be recovered during carbon bed regeneration
4. Has a low Btu content, thus making it difficult to burn
5. Contains non-polar organics

The adsorption capacity of a specific form of activated carbon depends primarily on the specific characteristics of the adsorbate and on the system conditions. High molecular weight and high boiling point

organics preferentially adsorb on a carbon surface. Low system temperature and high organic concentration (partial pressure) will also increase carbon capacity. Carbon capacity is typically expressed via an adsorption isotherm in which bed capacity is plotted as a function of the partial pressure of the organic vapor with system temperature as a parameter (Reference 25). Acrylonitrile adsorption isotherms are given in Figure 4-10 (Reference 26).

The adsorbate can be desorbed by raising the bed temperature 50°C greater than the boiling point of the adsorbate. This is commonly accomplished by passing low pressure stream or hot air through the bed. The highly concentrated (up to 25 percent by weight) by-product gas can then be incinerated or processed further to recover the organic materials. For example, if steam were used for regeneration, distillation or decanting could be used to recover the organics.

Despite the versatility of carbon adsorption, it does have certain inherent limitations. Depending on the particular adsorbate, activated carbon may catalyze cracking or polymerization of the adsorbed organic material. To prevent plugging, particulates must be removed prior to passage of the effluent through the bed. High water vapor concentrations (high humidity) may reduce the capacity of the bed. In general, 40 percent is considered to be the maximum allowable water vapor concentration in the effluent (Reference 14).

Physical adsorption releases 200-300 Btu per lb-mole of adsorbed material (Reference 14). Therefore, bed overheating may occur if rapid adsorption of a concentrated effluent occurs.

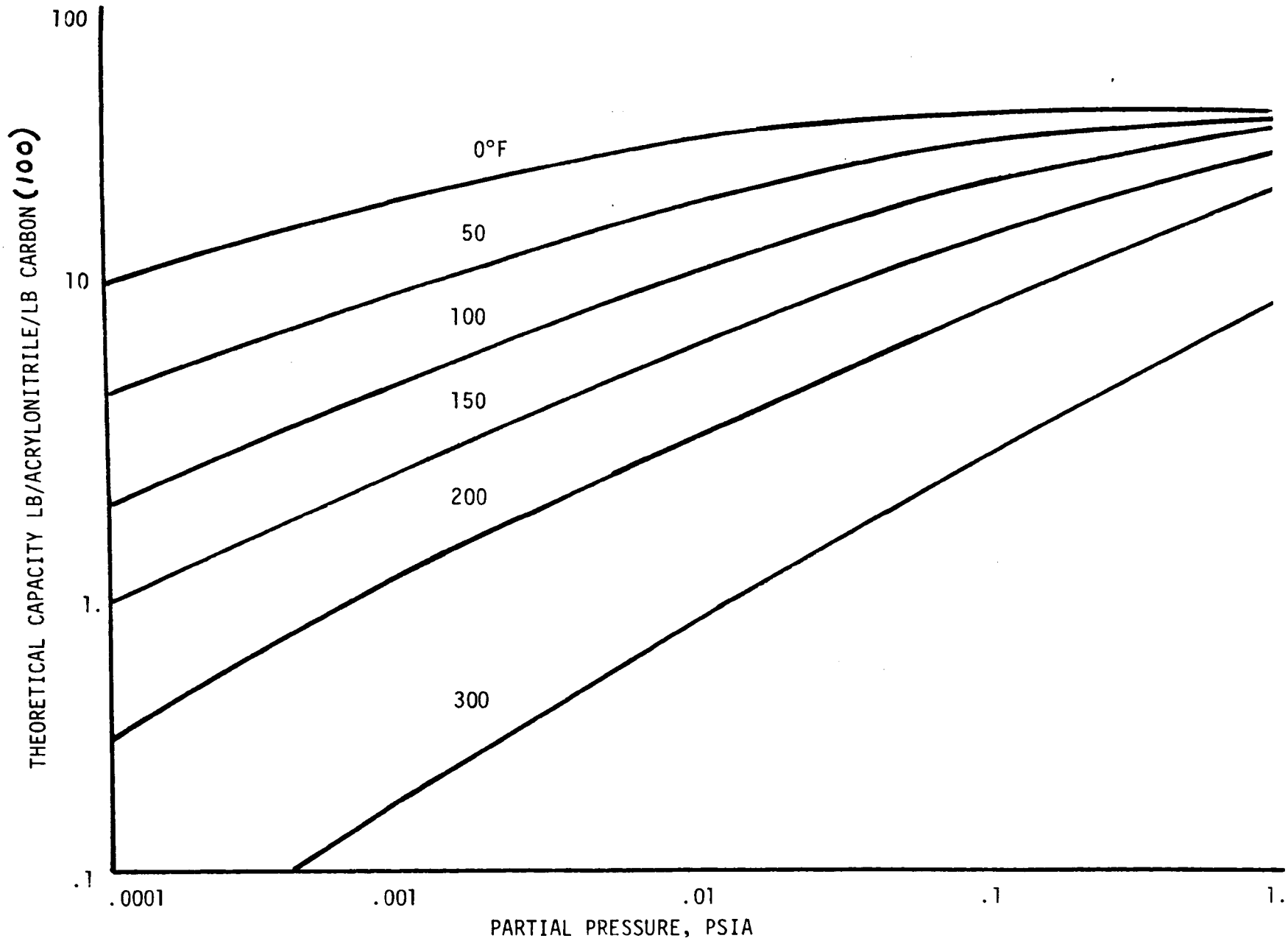

Figure 4-10. Acrylonitrile Adsorption on Activated Carbon (Reference 26)

4.5.2 Suitable Waste Streams

Three waste streams were evaluated for the applicability of carbon adsorption: (1) the absorber column vent gas, (2) the acrylonitrile waste-water stream, and (3) the reactor startup stream.

The absorber vent off-gas (Table 3-4) contains mainly low molecular weight organic compounds (less then C_3). Because carbon adsorption is not effective for removing these compounds, it is not considered useful for control of this stream.

The acrylonitrile waste water stream (Tables 3-5 and 3-6) contains large amounts of high molecular weight compounds. Carbon adsorption is suitable for control. This waste stream is currently sent to a settling pond where evaporation of the organics becomes a pollution problem. Unfortunately, this waste stream is not well characterized. Further work on waste water characterization and evaluation of carbon adsorption of the waste water is recommended in Section 5.

During reactor startup (stream 3) high concentrations of acrylonitrile (10 percent by weight) are vented directly to the atmosphere. This effluent stream has fluctuations in concentration and flowrate. It appears to be suitable for emission control using carbon adsorption. Acrylonitrile is readily adsorbed by activated carbon. Therefore, the rest of this section evaluates the use of carbon adsorption to control emissions from the reactor startup stream.

4.5.3 Technical Feasibility

Due to the high concentration of acrylonitrile in the reactor startup stream, use of carbon adsorption alone would require large amounts of carbon (50,000 lbs), and would require careful design to prevent carbon bed overheat or pollutant breakthrough.

These problems can be solved by having the effluent stream pass through a wet scrubber before the carbon adsorption bed. The wet scrubber reduces the acrylonitrile content of the stream from 10 percent to 1 percent, and the carbon adsorbs the remaining 1 percent. Process steam (150-200°C) can regenerate the carbon bed. The water from the wet scrubber and the carbon bed regeneration could be sent directly (or with temporary storage) to the absorber column for recovery of the acrylonitrile (Figure 4-11).

This system is designed to reclaim virtually all acrylonitrile lost during reactor startup. (Effluent acrylonitrile emissions are reduced to 1 ppm). The system also releases none of the NO_x which would result from flaring or incinerating of the same stream (see Section 4.2). At an acrylonitrile plant, reactor startup occurs once or more a month (four times a year for each reactor). The same scrubber and carbon adsorption system could be used for each reactor. Appendix A describes sizing and costing of this system.

The startup effluent stream also contains low concentrations of hydrogen cyanide and low molecular weight hydrocarbons. Although a significant portion of the HCN should be removed by the scrubber, any remaining low molecular weight hydrocarbons and HCN would pass through the adsorption beds into the atmosphere as a pollutant due to their poor adsorption on carbon. It should be possible to direct this effluent stream to the existing incinerators. Further study should be done to determine whether this is feasible. Since adsorption is exothermic, the rapid rate of acrylonitrile adsorption (1022 lb/hr) could require external cooling. Detailed design of the carbon adsorber must take into account

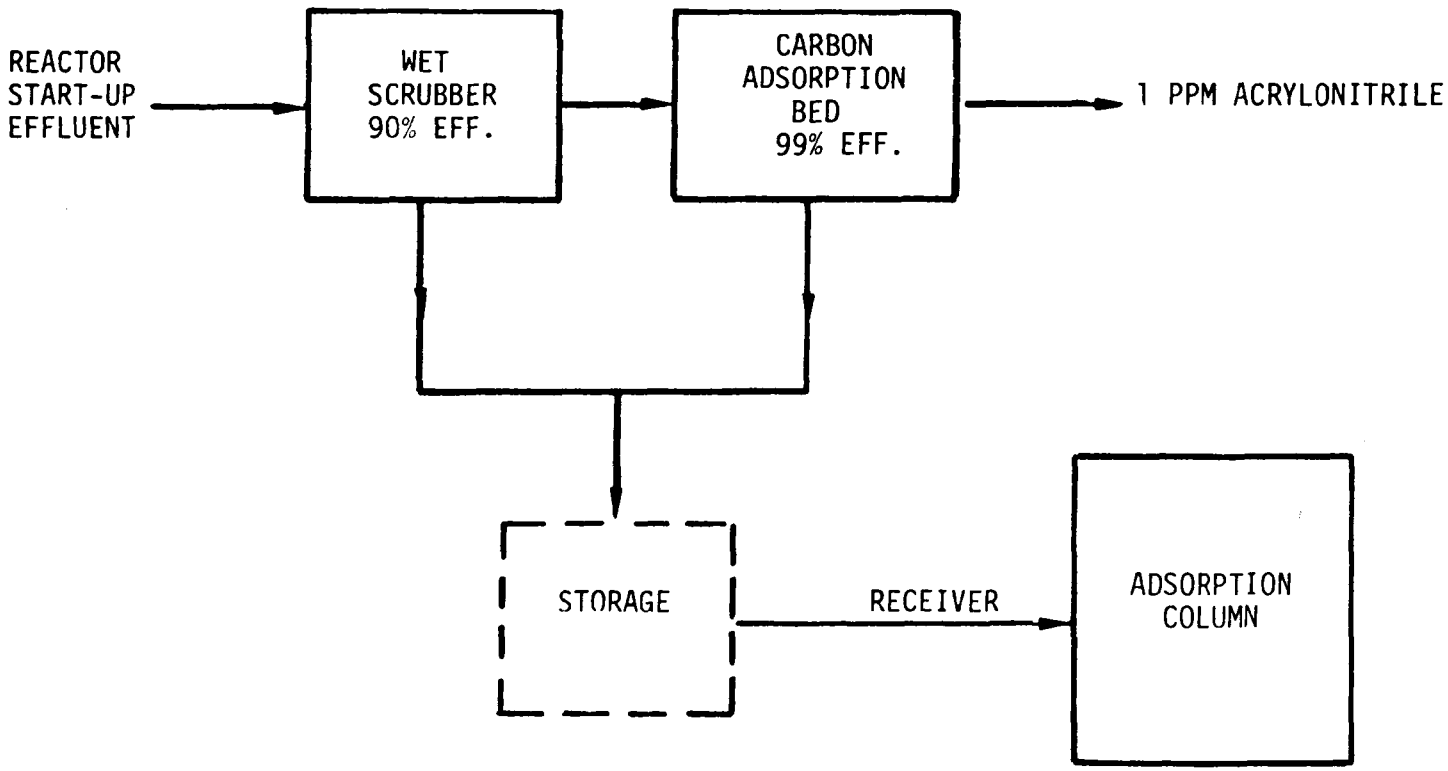

Figure 4-11. Proposed Wet Scrubber Carbon Adsorption Module

the need to dissipate the heat of adsorption, and the role that the wet scrubber itself will play in heat transfer.

4.5.4 Efficiency, Cost, Reliability, and Energy Requirements

Water scrubbing followed by carbon adsorption is an efficient method for removing acrylonitrile from an effluent stream and it allows almost complete recovery of the acrylonitrile. Carbon capacity is high, 33 lb acrylonitrile per 100 lb carbon, at these operating pressures. Exit pollutant concentrations as low as 1 ppm are possible. No NO_x is produced.

This system should be quite reliable. Carbon bed cooling may be required and should be investigated. The same scrubber and adsorption system can be used for each reactor.

Capital costs for the scrubber-adsorber combination total $212,000. Sizing and costing assumptions for this system appear in Appendix A.

There may be an energy cost associated with chilling the carbon beds; more detailed analysis is needed to ascertain if they require chilling. The main energy cost is the steam for regeneration. Fifteen pounds of steam are required for each pound of adsorbed organic, and 22,000 SCF of natural gas would be required to generate steam for each startup (Reference 26).

At 1978 prices, energy for each startup would cost less than $100 (Reference 27). $2500 worth of acrylonitrile would be reclaimed.

4.5.5 Conclusion

A wet scrubber-carbon adsorption system would effectively recover all acrylonitrile from the reactor startup stream. Lower molecular weight hydrocarbons may not be removed completely, requiring additional pollution control techniques. A demonstration program for a scrubber-adsorber on the startup stream is recommended in Section 5.

4.6 SOLVENT EXTRACTION AND ABSORPTION

4.6.1 Technical Description

The design of hydrocarbon pollution control systems is based on the fact that organic pollutants often dissolve readily in other hydrocarbons. There are two principal types of hydrocarbon absorption pollution control:

- Solvent extraction of hydrocarbon pollutants. In this process, a water solution containing hydrocarbon pollutants is brought into contact with a different liquid hydrocarbon. The pollutant hydrocarbon selectively dissolves in the liquid hydrocarbon. Then the water and the pollutant containing hydrocarbon liquid are separated.
- Absorption of hydrocarbon gas or mist into an organic solvent. This is a wet scrubbing process using a hydrocarbon as the scrubber rather than water.

4.6.2 Suitable Waste Streams

Scrubbing of hydrocarbon gases into hydrocarbon liquids was evaluated for use on the absorber vent gas stream and the reactor startup stream. Hydrocarbon scrubbing is practical for concentrated hydrocarbon streams; it is most commonly used for gas streams containing 40 percent to 85 percent hydrocarbon by weight (References 28 and 29). Since the vent gas and startup streams are 1.5 percent and 11 percent hydrocarbon by weight respectively, the further evaluation of hydrocarbon absorption was not performed.

Organic pollutants in waste water can also be cleaned by hydrocarbon scrubbing (solvent extraction). Another way to reduce organic pollution of acrylonitrile waste water is to change the acrylonitrile

manufacturing process to eliminate water scrubbing and substitute hydrocarbon scrubbing. Neither method for reducing pollutants in organic waste water has been put into practice, but both seem feasible and will be discussed in Section 4.6.3.

4.6.3 Technical Feasibility

Solvent extraction for organic-nitrogen containing waste water was examined by Union Carbide Corporation under contract to the Robert S. Kerr Environmental Research Laboratory of the Environmental Protection Agency, in Ada, Oklahoma (Reference 30). This work was based on previous research on solvent extraction for caprolactam plants. Union Carbide holds patent #3,433,788 (granted March 18, 1969) on this process. Although solvent extraction could be used on acrylonitrile waste water, this process has only been tried on caprolactam waste water. It is considered theoretically possible to reduce acrylonitrile water emissions down to ppm levels; however, any polymers in the waste water stream are expected to reduce the effectiveness of this process by forming emulsions that are difficult to separate.

Tests of the solvent extraction process on solutions containing caprolactam were performed in 1977 (Reference 30). Efficiency was found to be low in the primary extractor. Unwanted separation of pollutant and solvent occurred in the stripping column, and air leakage into the column caused solvent decomposition and oxidation. Further research is recommended to overcome these problems.

From these tests, it is impossible to draw conclusions about the effectiveness of solvent extraction on acrylonitrile plant waste water. The process was tested on amine-containing water while acrylonitrile plant waste waters contain nitriles. Extraction efficiencies will be different

for these different species. Polymers from the heavy ends (stream 25) in the waste water may form emulsions. To summarize, the feasibility of using solvent extraction for acrylonitrile waste water cannot be sufficiently evaluated with these data.

Badger Company holds a patent (#3,895,050, Disposal of Waste Materials from Unsaturated Nitrile) on prevention of waste water contamination by nitriles. The abstract of the patent is:

> A method of recovering and disposal of waste materials from a plant for manufacturing unsaturated aliphatic nitriles or aromatic nitriles whereby waste water, unreacted ammonia and by-products such as HCN and acetonitrile are not condensed but remain with the absorber off-gas for ultimate disposal by incineration. The method employs a hydrocarbon solvent to adiabatically quench the reactor effluent and, after removal of polymer by-products, the partially quenched effluent is passed to a hot absorber column where the nitrile product but no ammonia and only some of the HCN are absorbed by the hydrocarbon solvent. The nitrile-solvent mixture is distilled to separately recover the solvent and nitrile product. The solvent is recycled. The hot absorber off-gases are cooled to recover water and then incinerated with ammonia, HCN, acetonitrile and some vaporized solvent furnishing the necessary fuel values. In a preferred embodiment, solvent in the absorbed overheat vapors is recovered by scrubbing with a high boiling oil.

This is basically a control technology process change: absorption and quenching of the products in a hydrocarbon solvent rather than absorption in water. In this process, waste streams which are sent to incinerators are expected to be high in fuel nitrogen. Consequently, the incinerators are expected to be high NO_x emitters.

4.6.4 Efficiency, Cost, Reliability, and Energy Requirements

Solvent Extraction

The efficiency, cost, reliability, and energy requirements for solvent extraction cannot be estimated from the data available. Data would be needed on:

- Extraction efficiency of the solvent on waste water containing acrylonitrile
- Effects of polymer and other contaminants on the process.

This process is at an early stage of research and development; further study is needed before recommendations can be made. A theoretical and laboratory study of solvent extraction is recommended in Section 5.

Hydrocarbon Absorption Process Change

This method has not yet been put into practice. It would solve many waste water problems because water would never contact the product mixture. However, the small amount of water produced in the reaction would still need cleaning and disposal. Incineration of the solvent-by-product mixture might lead to high NO_x emissions, and the economics of this process are unknown.

4.6.5 Conclusion

Hydrocarbon absorption does not seem suitable for any of the gaseous streams at acrylonitrile plants, although such a process change might be suitable for eliminating waste water discharge.

More research needs to be done on solvent extraction for waste water at acrylonitrile plants. Research should include study of:

- Optimum solvent for nitriles (not amines)
- Solvent extraction efficiency for nitriles
- Effect of polymer on the solvent extraction.

In-plant process changes to eliminate water as a sorbent are untried and possibly expensive. Further work on this subject is not recommended.

SECTION 5

GENERAL CONSIDERATIONS

5.1 CONTROL METHODS FOR SPECIFIC STREAMS

5.1.1 Absorber Vent Gas Stream

Two control methods were evaluated for this stream: thermal and catalytic incineration. Since the hydrocarbon abatement efficiency of the catalytic incinerator was less than 50 percent (42.5 percent), no further evaluation of catalytic incineration was performed. For the thermal incinerator at Monsanto's plant in Chocolate Bayou, Texas, capital costs were $3.6 million dollars (1976). Supplemental fuel required was 148 MBtu/hr or, with 50 percent heat recovery, 74.4 MBtu/hr net. For a catalytic incinerator, capital costs would be approximately a factor of two higher and fuel requirements a factor of three lower (Reference 23).

5.1.2 Liquid Stream on Way to Holding Pond

Information on hydrocarbon absorption (solvent extraction) for this stream was incomplete. Carbon adsorption appears promising, but it was impossible to determine the efficiency, cost, reliability, or energy requirements of this technique.

5.1.3 HCN and Acetonitrile Incinerators

The literature on fuel nitrogen conversion implies that these incinerators may have serious NO_x emissions problems. Their efficiency, costs, and energy requirements were not evaluated further.

5.1.4 Startup Emission Stream

Combustion methods for abatement of this stream would produce large quantities of NO_x. For example, flaring this stream would yield 29,000 ppm NO_x. Ninety percent hydrocarbon abatement would be achieved, with 25,000 SCF of natural gas used per startup and a capital cost of around $30,000.

A preferred method of abatement for this stream is a portable wet scrubber-carbon adsorption module. All the acrylonitrile absorbed in the wet scrubber and carbon adsorber could go back to the process for recovery; there would be no secondary pollutant stream. Abatement for acrylonitrile emission would be over 99 percent, capital cost for the system would be $212,000 with natural gas costing less than $100 (22,000 SCF) would be required to generate steam for regeneration of the carbon bed. While this method requires several times the capital cost of flaring, $2500 worth of acrylonitrile would be recovered at each startup.

5.2 RESEARCH AND DEMONSTRATION RECOMMENDATIONS

5.2.1 Absorber Vent Gas Stream

Thermal incinerators for this stream do not need further development. An advanced catalytic combustion method, graded cells, might increase the effectiveness of catalytic incineration in the future by reducing hydrocarbon passthrough (Reference 31). No specific research or development program is recommended; however, when catalytic abaters are developed in other contexts, they may be applied here.

5.2.2 Liquid Stream On Way to Holding Pond

Two programs are recommended:

- A program to evaluate carbon adsorption and alternate waste water treatment methods used in Europe,

- A bench-scale program to assess the efficiency of using the solvent extraction method under development for caprolactam plant waste waters for acrylonitrile plant waste waters. This program would assess:
  - -- The efficiency of these solvent extraction methods at extracting the waste water hydrocarbons
  - -- The extent of interference of the polymer fraction of waste water
  - -- The stability against oxidation of the solvents (solvent oxidation has been a problem in the caprolactam applications)
  - -- The costs and energy requirements of scaling up this solvent extraction system.

5.2.3 HCN and Acetonitrile Incinerators

A study is recommended of the existing incineration methods to determine the factors affecting their NO_x emissions. If a NO_x emission problems exists, an advanced incineration abatement feasibility study should be undertaken.

Two-stage low NO_x incineration should be evaluated for combustion of these compounds. Both thermal and catalytic systems should be studied, as well as processes where incineration is followed by alkali scrubbing and ammonia injection.

After this feasibility study, a demonstration program of the best incineration process would be appropriate.

5.2.4 Startup Emission Stream

Two programs are recommended:

- A feasibility study of routing the startup emission stream to the existing absorber. A demonstration program is recommended if this proves feasible.
- A demonstration program for the wet-scrubber, carbon-adsorption module described in Section 4.

REFERENCES

1. Hughes, T. W. and Horn, D. A., "Source Assessment: Acrylonitrile Manufacture (Air Emissions)," EPA-600/2-77-107j, September 1977.

2. "Economic Impact Assessment for Acrylonitrile," Final Report, submitted to David R. Bell -- COTR, Occupational Safety and Health Administration, February 21, 1978.

3. Pervier, J. W., et al., "Survey Reports on Atmospheric Emissions from the Petrochemical Industry," Volume 1, EPA-450/3-73-005A, March 1974.

4. Clements Associates report by Dr. Robert Squire, dated September 2, 1977, Pursuant to DOL Contract No. 2-9-f-7-0099 for the Critical Scientific Evaluation of Data on the Carcinogenic Potential of Acrylonitrile (quoted in Reference 2).

5. NIOSH Memo of December 7, 1977, including transmittal of pathologists' reports on reviews of MCA and duPont studies, (quoted in Reference 2).

6. Schwartz, W. A., et al., "Engineering and Cost Study of Air Pollution Control for the Petrochemical Industry," Volume 2: Acrylonitrile Manufacturing, EPA-450/3-73-006b, February 1975.

7. "Emission Control Options for the Synthetic Organic Chemicals Manufacturing Industry," Trip Report, Acrylonitrile Production Plant, September 7, 1977.

8. Personal communication with T. W. Hughes, Monsanto, February 2, 1978.

9. Caporali, G., "How Montedison makes Acrylo," Hydrocarbon Processing, pp. 144-146, November 1972.

10. Klett, M. G., et al., "Flare Systems Study," Lockheed Missiles and Space Company, Huntsville, Alabama, U.S. Department of Commerce, EPA-600/2-76-079, March 1976.

11. Personal communication with Bill McNew, National Air-Oil Burner Co., April 1978.

12. Sternling, C. N., and Wendt, J. O. L., "On the Oxidation of Fuel Nitrogen in a Diffusion Flame," AIChE Journal, Volume 20, No. 1, pp. 81-85, January 1974.

13. Hemsath, K. H., Thekdi, A. C., and Lewis, F. M., "Application of Reaction Kinetics and Mixing Studies in Design of a Fume Incinerator," No. 73-299, 66th Annual Air Pollution Control Association Meeting, June 24-28, 1973

14. "Control of Volatile Organic Emissions from Existing Stationary Sources, Volume 1: Control Methods for Surface-Coating Operations," EPA-450/2-76-028, November 1976.

15. Hemsath, K. H., and Thekdi, A. C., "Rich Fume Incineration," Pollution Engineering, pp. 38-39, July 1973.

16. Davis, A., "Incineration of Low Oxygen Fumes," Pollution Engineering, p.36, December 1972.

17. Cegielski, J. M., Jr., "The Technology of Modern Incineration Processes," AIChE National Meeting, Houston, Texas, March 20-24, 1977.

18. Axworthy, A. E., et al., "Chemistry of Fuel Nitrogen Conversion to Nitrogen Oxide in Combustion," EPA-600/2-76-039, February 1976.

19. Personal communication with W. Macon Sheppard, Environmental Consultants, Clemson, S. Carolina, July 1978.

20. Matthews, R. D., "The Nature and Formation of Nitrogenous Air Pollutant Emissions from Combustion Systems," Lawrence Berkeley Laboratory, LBL-6850, October 1977.

21. Eckel, J. A., "Hydrocarbon Emissions Abatement by Incineration," AIChE 83rd National Meeting, March 20-24, 1977.

22. Personal communication with James Eckel, Monsanto Co., St. Louis, Missouri, May 3, 1978.

23. Personal communication with W. Fielding, Midland-Ross, Chicago, Illinois, May 4, 1978.

24. "The Practical Solution to Hydrocarbon Emissions Control, the DuPont Catalytic Abatement System," brochure, Applied Engineering Company, Inc., Orangeburg, South Carolina.

25. Cheremisinoff, P. N., "Carbon Adsorption of Air and Water Pollutants," Pollution Engineering, pp 24-32, July 1976.

26. Personal communication with R. I. Cooley, Calgon Corporation, May 8, 1978.

27. "Adsorption Bed Costing," pamphlets, Nos. 23-2001a and 23-1040, Calgon Corporation, March 1, 1977.

28. Pruessner, R. D. and Broz, L. D., "Hydrocarbon Emissions Reduction Systems Utilized by Petro-Tex," AIChE annual meeting, March 1977.

29. Personal communication with L. D. Broz, February 1978.

30. Personal communication with W. DePrater, EPA, ADA, Oklahoma, March 31, 1978

31. Personal communication with John Kesselring, Acurex Corporation, Mt. View, California, May 1978.

32. "Air Pollution," Vol. IV, Engineering Control of Air Pollution-Scrubbing. Seymour Calvert, Academic Press Inc., 1977.

APPENDIX A

ASSUMPTIONS AND RESULTS FOR SCRUBBER-ADSORBER SIZING AND COSTING

Wet Scrubber

Assumptions:

Table 3-8 describes the reactor startup effluent stream which is to be controlled by the scrubber-adsorber unit.

The scrubber was designed to adsorb 90 percent of the acrylonitrile in this stream: the effluent from the scrubber will be 1 percent acrylonitrile. This concentration of acrylonitrile is suitable for cleanup by carbon adsorption.

The cost of a wet scrubber is $5.40/ACFM (Reference 32).

Results:

Input to scrubber:	108,532 lbs effluent/hr
	10,221 lbs acrylonitrile/hr
Output:	99,332 lbs effluent/hr
	1,022 lbs acrylonitrile/hr
	Partial pressure of acrylonitrile: 0.16 psig
	Temperature of acrylonitrile: 40°C
	Cost of wet scrubber: $135,000

Carbon Adsorber

Assumptions:

Input to adsorber is output from scrubber.

Theoretical capacity of the carbon adsorber is 33 lbs acrylonitrile/100 lb carbon.

Regenerating with 250°F steam would leave 10 lb acrylonitrile/100 lb carbon unregenerated.

Operating capacity would be 23 lbs acrylonitrile/100 lb carbon if unit were operated to 100 percent breakthrough.

Since the adsorption cycle will be terminated shortly after the initial breakthrough, before all the carbon is saturated, the overall carbon capacity is approximately 15 lb acrylonitrile/100 lb carbon (Reference 19).

The carbon bed must adsorb 1022 lb acrylonitrile in one hour during startup, and then be regenerated.

Output is less than 1 ppm acrylonitrile.

Results:

For 1022 lbs acrylonitrile, 6810 lb carbon would be required.

Carbon beds are frequently purchased in 6000 lb units (References 25 and 26). Since the carbon bed requirement is more than 10 percent over the standard size, the engineering assumption was made that two carbon beds would be needed.

Cost of two 6000 lb carbon beds = $66,000

Cost of carbon at $0.90/lb = $11,000

Carbon adsoprtion system cost = $77,000

Energy requirement for regeneration of carbon: 22,000 SCF of natural gas used to form steam, gas costing approximately $50 at 1978 prices.

Combined System

Assumptions:

All acrylonitrile from wet scrubber and carbon adsorber regeneration is reclaimed.

Acrylonitrile is worth $0.25/lb (January 30, 1978, Chemical Marketing Reporter).

Results:

System capital costs:	$135,000 scrubber
	$ 77,000 adsorber
	$212,000 total
Cost of energy:	$50/startup
Credit for acrylonitrile:	$2500/startup

APPENDIX B

POTENTIAL NO_x FORMATION FROM REACTOR STARTUP

Assuming that all fuel nitrogen is converted to NO_x, and that no N_x (in air) is converted to NO_x, the maximum amount of fuel nitrogen available for reaction is shown in Table A-1. (Data from Reference 6).

Table A-1

Combustible Compound	Molecular Weight	Weight % in Effluent	Weight % Nitrogen in Effluent	Weighted Change in Moles upon Reaction
Ammonia	17	0.36	0.296	-0.00148
Hydrocyanic Acid	27	0.43	0.223	-0.00215
Acrylonitrile	53	9.42	2.488	-0.04710
Acetonitrile	41	0.29	0.099	-0.00145
		3.106		-0.05218

Therefore, the total number of moles of NO_2 in the effluent is:

$$\frac{0.03106 \text{ lb N}}{1 \text{ lb Effluent}} \times \left(\frac{1 \text{ lbmole } NO_2}{14 \text{ lb N}}\right) \Big/ \left(\frac{1 \text{ lbmole Effluent}}{30 \text{ lb Effluent}}\right)$$

$$= 0.067 \frac{\text{lbmole } NO_2}{\text{lbmole Effluent}}$$

Addition of 0.016 lbmole natural gas per 1 lbmole effluent is required to raise the Btu content to combust the flare (Reference 11). The amount of air required to combust the effluent is 1.05 lbmoles air/lbmole effluent. The amount of air required to combust the natural gas is 7.52 lbmoles air/lbmoles natural gas. Therefore, the total volume exiting the flare (corrected for mole change upon reaction) based upon 1 lbmole effluent is:

$$(0.016 \text{ lbmole natural gas} + 0.120 \text{ lbmoles air}) \times 1 \frac{\text{lbmoles Output}}{\text{lbmoles Input}}$$

$$+ \quad (1 \text{ lbmole effluent} + 1.05 \text{ lbmole air}) \times 1.052108 \frac{\text{lbmoles Output}}{\text{lbmoles Input}}$$

$$= \quad 2.29 \text{ lbmoles Output}$$

Thus the maximum concentration of NO_2 in the effluent is:

$$\frac{0.067 \dfrac{\text{lbmoles } NO_2}{\text{lbmoles Effluent}}}{2.29 \dfrac{\text{lbmoles Output}}{\text{lbmoles Effluent}}} = 29{,}220 \text{ ppm}$$

TECHNICAL REPORT DATA
(Please read Instructions on the reverse before completing)

1. REPORT NO. EPA-600/2-79-048	2.	3. RECIPIENT'S ACCESSION NO.
4. TITLE AND SUBTITLE Acrylonitrile Plant Air Pollution Control		5. REPORT DATE February 1979
		6. PERFORMING ORGANIZATION CODE
7. AUTHOR(S) M. T. Anguin and S. Anderson		8. PERFORMING ORGANIZATION REPORT NO.
9. PERFORMING ORGANIZATION NAME AND ADDRESS Acurex Corporation, 685 Clyde Avenue, Mountain View, California 94042		10. PROGRAM ELEMENT NO. 1AB604
		11. CONTRACT/GRANT NO. 68-02-2611, W.A. 15
12. SPONSORING AGENCY NAME AND ADDRESS EPA, Office of Research and Development, Industrial Environmental Research Laboratory, Research Triangle Park, NC 27711		13. TYPE OF REPORT AND PERIOD COVERED Final; 1/78 - 12/78
		14. SPONSORING AGENCY CODE EPA/600/13

15. SUPPLEMENTARY NOTES Project officer I.A. Jefcoat is no longer with IERL-RTP. For details contact Bruce Tichenor, MD-62, 919/541-2547.

16. ABSTRACT Based on available literature, the report identifies and ranks (in terms of efficiency, cost, and energy requirements) air pollution control technologies for each of four major air pollutant emission sources in acrylonitrile plants. The sources are: (1) absorber vent gas streams, (2) liquid waste holding ponds, (3) hydrogen cyanide/acetonitrile incinerators, and (4) reactor startup streams. It also identifies control technology research and development needs. Conclusions concerning emissions from each source include: (1) absorber vent gas streams--large amounts of hydrocarbons (HCs) are emitted; thermal incineration is an acceptable and efficient control; (2) liquid waste holding ponds--high levels of HC emissions occur; no controls are available for these emissions at the ponds; reduction of the HC levels prior to discharge to the ponds is feasible; research should be conducted on carbon absorption and solvent extraction; (3) hydrogen cyanide/acetonitrile incinerators--high levels of NOx may occur; more data are required; advanced incineration techniques should be investigated; and (4) reactor startup streams--large amounts of acrylonitrile are vented to the atmosphere during reactor startup; incinerating this stream produces high levels of NOx; carbon adsorption and wet scrubbing appear feasible; and demonstrations are required.

17. KEY WORDS AND DOCUMENT ANALYSIS

a. DESCRIPTORS		b. IDENTIFIERS/OPEN ENDED TERMS	c. COSATI Field/Group	
Air Pollution	Incinerators	Air Pollution Control	13B	
Acrylonitriles	Hydrocarbons	Stationary Sources	07C	
Industrial Processes	Nitrogen Oxides		13H	
Ponds	Scrubbers		08H	07A/13I
Hydrogen Cyanide	Activated Carbon		07B	11G
Acetonitrile	Adsorption			

18. DISTRIBUTION STATEMENT Unlimited	19. SECURITY CLASS (This Report) Unclassified	21. NO. OF PAGES 86
	20. SECURITY CLASS (This page) Unclassified	22. PRICE

EPA Form 2220-1 (9-73)