EPA-670/2-75-039
May 1975

Environmental Protection Technology Series

ADVANCED AUTOMATIC CONTROL STRATEGIES FOR THE ACTIVATED SLUDGE TREATMENT PROCESS

National Environmental Research Center
Office of Research and Development
U.S. Environmental Protection Agency

EPA-670/2-75-039
May 1975

ADVANCED AUTOMATIC CONTROL STRATEGIES FOR THE ACTIVATED SLUDGE TREATMENT PROCESS

By

Joseph F. Petersack and Richard G. Smith
Systems Control, Inc.
Palo Alto, California 94304

Program Element No. 1BB043

Project Officer

Joseph F. Roesler
Advanced Waste Treatment Research Laboratory
National Environmental Research Center
Cincinnati, Ohio 45268

NATIONAL ENVIRONMENTAL RESEARCH CENTER
OFFICE OF RESEARCH AND DEVELOPMENT
U.S. ENVIRONMENTAL PROTECTION AGENCY
CINCINNATI, OHIO 45268

REVIEW NOTICE

The National Environmental Research Center - Cincinnati has reviewed this report and approved its publication. Approval does not signify that the contents necessarily reflect the views and policies of the U.S. Environmental Protection Agency, nor does mention of trade names or commercial products constitute endorsement or recommendation for use.

FOREWORD

Man and his environment must be protected from the adverse effects of pesticides, radiation, noise, and other forms of pollution, and the unwise management of solid waste. Efforts to protect the environment require a focus that recognizes the interplay between the components of our physical environment - air, water, and land. The National Environmental Research Centers provide this multidisciplinary focus through programs engaged in

- Studies on the effects of environmental contaminants on man and the biosphere, and

- A search for ways to prevent contamination and to recycle valuable resources.

Several control strategies were evaluated during the course of this study to demonstrate the benefits of automatic control of wastewater treatment plants. Improved control of wastewater treatment plants increases plant reliability and thus reduces environmental contamination.

ABSTRACT

Results are presented in this report of a demonstration of both the feasibility and benefits of applying several, advanced, wastewater-treatment control strategies using a digital computer for data acquisition with a man in the control loop for control implementation. The work was conducted in a full-size (35-MGD (0.13-Mm^3/day) capacity) secondary treatment plant at Palo Alto, California.

Control strategies were tested for the secondary treatment portion of the process and they involved regulation of aeration-tank dissolved oxygen (DO) mixed liquor suspended solids control (MLSS) and food-to-microorganism ratio (F/M). Two variations of F/M control were evaluated using, air flow (in one instance) and a direct measurement of sludge respiration with an on-line respirometer (in the other instance) to estimate food (BOD). An extensive data-collection program was incorporated which allowed detailed statistical evaluation of each control algorithm with regard to performance, effluent quality impact, operating costs, and reliability. Comparison was made with similar data collected during benchmark manual-operation tests. Overall results indicate that digital control, using advanced control concepts, is feasible and that demonstrable improvements in effluent quality can be obtained. Direct operating-cost savings in the form of an 11% reduction in air usage were also shown for DO control.

This project was performed by Systems Control, Inc., under contract to the City of Palo Alto, California. The Environmental Protection Agency provided funding under grant number R800356 for the project's demonstration of "Advanced Control Algorithms for the Activated Sludge Process". In addition, the State of California Water Quality Control Board contributed additional funds to the project.

CONTENTS

		Page
Foreword		iii
Abstract		iv
List of Figures		vi
List of Tables		viii
Acknowledgements		ix
Sections		
I	Conclusions	1
II	Recommendations	4
III	Introduction	6
IV	Phases of the Project	12
V	Control Algorithm Design	15
VI	Experimental Design	34
VII	Hardware and Software Implementation	46
VIII	Control Performance of Automated Strategies	59
IX	References	89
X	Glossary	91
XI	Appendices	93

FIGURES

No.		Page
1	Schematic Flow Diagram of the Palo Alto Sewage Treatment Plant	8
2	Sewage Flow Diagram: City of Palo Alto Water Quality Control Plant	9
3	Process Flowsheet Activated Sludge System (Conventional System)	10
4	Process Flowsheet Activated Sludge System (Contact Stabilization)	11
5	Schematic Diagram of Dissolved Oxygen Control System	16
6	Dissolved Oxygen Controller Block Diagram	21
7	Schematic Diagram of the MLSS Control System	24
8	MLSS Controller Block Diagram	25
9	Schematic Diagram of Food-to-Microorganism Ratio Control Systems	28
10	Air/RAS Controller Block Diagram	29
11	Respirometer/RAS Controller Block Diagram	31
12	TOC/RAS Feedforward-Controller Block Diagram	33
13	Sample Locations	40
14	Suspended Solids Meter Comparisons	48
15	Respirometer Schematic Diagram	50
16	Badger Respirometer Performance	51
17	Schematic Diagram of TOC Analyzer Installation	52
18	Computer Configuration	54
19	DO Controller: Dissolved Oxygen and Air Flow vs. Time	62

FIGURES (continued)

No.		Page
20	Manual Test I: Dissolved Oxygen and Air Flow vs. Time	63
21	Manual Test II: Dissolved Oxygen and Air Flow vs. Time	64
22	Dry Season Tests: Secondary Effluent BOD_5 Concentration vs. Log Normal Frequency Distribution	68
23	Dry Season Tests: Secondary Effluent Suspended Solids Concentration vs. Log Normal Frequency Distribution	69
24	MLSS Controller: MLSS and RAS vs. Time	72
25	Manual Test I: MLSS and RAS vs. Time	73
26	Air/RAS Controller: Actual and Estimated Food Uptake	75
27	Air/RAS Controller: MLSS and RAS vs. Time	76
28	Manual Test II: MLSS and RAS vs. Time	77
29	Comparison of Manual Automatic Control of F/M over a three day period Comparison	78
30	Wet Season Test: Secondary Effluent BOD_5 Concentration vs. Log-Normal Frequency Distribution	80
31	Wet Season Test: Secondary Effluent Suspended Solids Concentration vs. Log-Normal Frequency Distribution	81
32	Respirometer/RAS Controller: Actual vs. Estimated Food Uptake	84
33	Respirometer/RAS Controller: MLSS and RAS vs. Time	86

TABLES

No.		Page
1	Sample Analysis Techniques	41
2	Process Data	43
3	Laboratory Data	44
4	Instrument Costs	47
5	Palo Alto Computer Programs	56
6	Computer System Failures	57
7	Typical Computer Costs	58
8	Averages for Operating Variables for a 30-Day Test Period	60
9	Removal Efficiencies over a 30-Day Test Period	66
10	Operating Cost Comparisons for this Study's Six Test Periods	70
11	Aerator Loading for this Study's Six Test Periods	82

ACKNOWLEDGEMENTS

Project Director for the City of Palo Alto was Mr. R. N. Doty, Superintendent of the Regional Water Quality Control Plant where the demonstration took place. Mr. Doty and his staff provided invaluable cooperation and guidance throughout the course of the work. Technical monitor and Project officer for the EPA was Mr. Joseph F. Roesler, and contract administrator for the California State Water Quality Control Board was Mr. Kurt Wasserman. Acknowledgments are given to IBM for the loan of a System/7 computer that was used in the project.

In addition to all of those mentioned above who aided in the execution of this project, the help of the following is also gratefully acknowledged. Mr. Robert Smith of the Advanced Waste Treatment Laboratory, U.S.EPA, and Dr. Mel Holland of the California Water Quality Control Board.

For Systems Control, Inc., the Project Manager was Laszlo Hajdu and the Project Coordinator was John Meyer. Project support was also provided by Joseph Petersack, Richard G. Smith, Charles Martin, David Stepner and Charles Wells.

SECTION I

CONCLUSIONS

The feasibility and benefits of applying several advanced wastewater treatment control strategies in an operational wastewater treatment plant using a digital computer have been demonstrated. The work was conducted in a full-size (35-MGD (0.13-Mm^2/day) capacity) secondary treatment plant at Palo Alto, California. Detailed evaluation of each control algorithm with regard to effluent quality impact, operating costs, and plant reliability was made and compared to manual operations. Overall results indicate digital control, using advanced control concepts, is technically feasible. Demonstrable improvements in effluent quality were obtained with the DO control systems. Specific results are summarized below:

Four advanced control algorithms implemented by a man in the loop approach were tested and compared with manual plant operation. They were:

- Dissolved Oxygen (DO) Control
- Mixed Liquor Suspended Solids (MLSS) Control
- Food to Mass of Micro-organism (F/M) Control using Air Flow to infer food and the rate of Returned Activated Sludge (Air/RAS)
- F/M Control using a Respiration Rate measurement to infer food and the rate of Returned Activated Sludge (respirometer/RAS).

A fifth control approach, F/M control based upon TOC loading and rate of returned activated sludge, was attempted but inadequate continuous TOC measurements prevented development of the control approach.

The testing covered both wet and dry-season operation with the first two controllers (and one manual test) in the dry season, and the last two controllers (and a manual test) in the wet season. Dry season tests were conducted with the plant in a new contact stabilization configuration, and wet season tests were conducted with the plant in the conventional, fully mixed, aerator configuration.

The DO controller demonstrated excellent regulating capability in maintaining DO in the aerator at the desired setpoint of 1.0 mg/l. Effluent quality improvement amounted to approximately 7% relative increase in overall secondary removal efficiency based on the four "quality variables" measured - SS, BOD_5, TOC, and COD. An 11% reduction in air use was a major quantifiable operating cost benefit. At Palo Alto, this represented a power cost saving of approximately $5,300 per year.

MLSS control was an interim algorithm intended for use in cascade control in other algorithms. Solids levels in the aerators were maintained

nearly at set point, except during periods of low plant flow where the lower limit on the RAS pumping caused uncontrolled increases in MLSS. While the effluent quality during MLSS control decreased slightly compared to the manual control period, the plant in the new contact configuration exhibited a gradual change in sludge settleability and developed floating material on the final settlers. This change in sludge character was probably responsible for the slight decrease in plant performance and prompted the reconversion of the plant back to its original, completely mixed configuration for the remainder of the control studies.

The first F/M controller, Air/RAS, with D.O. control, exhibited improvement in the regulation of the variability of the instantaneous F/M compared to that observed during conventional manual operation. But, with the plant operated in the completely mixed configuration, it did not produce completely effective regulation of the F/M. The plant air flow rate with the plant under D.O. control, however, provided a satisfactory indication of plant load changes and correlated well with the manually determined BOD_5 in the primary effluent entering the biological reactor. Thus improved and reasonable F/M regulation appears feasible if:

- Adequate sludge storage capacity is provided in the RAS system
- Limitations on high/low RAS pumping rates are removed by plant design changes. (A smaller low limit pumping rate would enable additional sludge storage during periods of low aerator loadings and low plant flows.)

Secondary effluent efficiency during the 28-day Air/RAS control period decreased slightly compared to that during operation with analog man in the loop D.O. control (Manual Test II), but the absolute values of the secondary effluent and the overall plant removal efficiencies remained essentially similar. With the plant's solids inventory and RAS limitations and with the short duration of the control test, realistic evaluation of Air/RAS control approach on plant performance was not achieved.

The second F/M controller, the respirometer/RAS control with D.O. control, also exhibited improved but not complete regulation of the variability in the instantaneous F/M. The respirometer/RAS controller produced the most reduction in the diurnal variability of the instantaneous F/M observed during the entire study and kept all instantaneous F/M values below the point of 0.33 gm of BOD_5/day/gm of MLVSS. The controller with the process actually exhibiting an average F/M of about 0.15 gm of BOD_5/day/gm of MLVSS, however, did not control to the setpoint F/M and exhibited severe lags of up to 4 hours in responding to process BOD_5 load changes.

With unusually efficient primary performance during the respirometer/RAS test period, the % efficiency of the biological secondary process did

not change significantly. The best overall plant efficiency and the best absolute effluent quality observed during the entire study occurred during plant operation with the respirometer/RAS control. The apparent improvement, however, is probably not related only or perhaps even chiefly to the application of respirometer/RAS control. During this control test, changes in plant wasting, at the request of the City of Palo Alto, increased the solids inventory in the biological process compared to that during all other operations. The increased inventory both in the reactor and clarifier produced the significantly lower average operating F/M. With the low limit on the plant's RAS pumping rate and with the lags and inaccuracies in the control algorithm, F/M control to setpoint was impossible. Further work is needed to assess the relative effects on plant performance of the reduced variability in the instantaneous F/M and the operation of the plant at a significantly lower average F/M.

Digital computer reliability, after system software development, was excellent. Availability (% of operation time) was over 99%.

Instrument reliability was excellent, for the DO meters and the MLSS meters, with only infrequent calibration checks required. The on-line respirometer was also reliable, but required a somewhat higher level of periodic maintenance for cleaning and for chemicals replacement. The on-line TOC analyzer required extensive calibration and maintenance, and this analyzer will require additional development to be fully acceptable in primary effluent service.

Data management functions developed for the demonstration included automated scanning, logging, and data-base updating. The functions allowed on-line reports, equipment and alarm summaries, and off-line data preparation. Additionally, a set of programs was developed to analyze the data for effective comparative analysis of the various tests. Additional functions included on-line tuning of algorithms and monitoring of control-performance.

SECTION II

RECOMMENDATIONS

In general, while existing instrumentation (except for the TOC control approach) is sufficiently reliable to implement the advanced control algorithms that were demonstrated, sensor development should be encouraged for on-line monitoring and control.

Specific recommendations are:

1. Develop specifications and design guidelines for closed loop DO control systems in fully mixed aerators to realize energy savings and improved effluent quality.

2. Make further explorations using pilot-plant process-development studies directed toward improving instantaneous F/M control. Among the areas to investigate are the impact of separate sludge storage and the results to be expected for plug-flow reactors.

3. Evaluate the possibilities for, and benefits of, controlling other plant functions from the computer such as:

   - Activated sludge wasting
   - Chlorine dosage
   - Digester temperature
   - Sludge solids handling

4. Determine optimum methods for computer information display and operator interfacing to improve monitoring and control of the plant. More frequent and higher quality data will speed trouble diagnosis and improve productivity by having the computer perform the routine data-reporting functions.

5. Continue testing of on-line analytical instrumentation, especially for the quantities TOC, COD and low-level (less than 50 mg/l) suspended solids. Evaluation should place emphasis on reliability with minimum maintenance and calibration requirements.

Less quantifiable, but potentially more significant, operating cost savings were not addressed in this study, but they should ultimately be considered when determining the cost/benefit tradeoffs for these controllers. Among the areas of definite further savings are:

- Manpower Productivity - More effective manpower utilization is possible with closed loop automatic control because such

control relieves operators of time-consuming adjustments of process-monitoring and control devices.

- Incremented Capacity Costs - Improved effluent quality may be translated into increased plant capacity. This could result in a delay or reduction in planned expansion of facilities with a resultant sizeable savings in capital investment costs.

A detailed economic-investment analysis, including estimates of these and other factors, is necessary before the true net cost of an operational control system, be it analog or digital, can be ascertained.

SECTION III

INTRODUCTION

SCOPE AND PURPOSE OF THE DEMONSTRATION PROJECT

The Palo Alto Automation Project demonstrated the feasibility of using man in the loop digital computer control to implement several advanced control schemes for the activated sludge process of a wastewater treatment facility. Control algorithm designs were selected to achieve improvements in waste removal efficiencies as well as reductions in operating costs. Extensive computerized data collection and analysis were employed to evaluate each control system for a 30 day experimental test period. Two 30-day tests were also performed in which conventional plant operation was employed. The manual control periods provide comparison data for both wet and dry season operation. A three-day intensive, data-collection period at the end of each 30-day test was used to obtain information for detailed hour-by-hour evaluation of control system performance.

Control strategies examined were concerned with the secondary treatment, or activated sludge portion of the plant. Basically, the various experiments fall into two categories:

1. Control of dissolved oxygen concentration in order to minimize aeration costs.

2. Control of the ratio of waste utilization to microorganism concentration (Food to mass, F/M) in an attempt to improve waste removal efficiency by following the daily variations in plant loading.

The objects of this demonstration were to indicate the advantages and some of the costs associated with computer automation of some phases of operation for this type of treatment plant. Also, comparison data is developed to indicate how successfully the new process control schemes improved removal efficiencies and/or reduced operating expenses. The implications of the results have broad impact since this project, although carried out in a new plant (start-up October, 1972), involved installing a computer and associated automation related instrumentation in a plant not specifically designed for computerized data logging and automatic control.

DESCRIPTION OF PALO ALTO REGIONAL TREATMENT FACILITIES

The Palo Alto plant is a regional facility serving the cities of Palo Alto, Mountain View, Los Altos, and Stanford University. Waste is primarily domestic at present, although a batch process industrial

treatment facility is to be placed in operation shortly. Plant design capacity is 35 MGD (0.13 Mm^3/day) and current operation is in the 25 MGD (0.095 Mm^3/day) to 30 MGD (0.115 Mm^3/day) range. The plant is a conventional, secondary treatment plant with final effluent chlorination. After primary sedimentation, the waste is treated in an activated sludge process employing clarifiers for activated sludge recycle. Current loading of BOD_5 is about 30 to 40 thousand pounds per day.

For this study the secondary portion of the plant was modified to operate in a contact stabilization configuration to provide an inventory of sludge. Both the contact and the aeration basins were completely mixed. However, operational difficulties with the contact stabilization configuration at Palo Alto forced revision of the operation to the original plant design configuration, completely mixed aeration. Consequently, in the report the secondary portion of the plant is described for two modes of operation.

Sludge disposal is accomplished by means of incineration and ash dumping in a nearby solid refuse area. Pre-incineration dewatering is carried out in sludge thickening tanks and then by centrifuging. A schematic diagram of the plant process, minus the centrifuges and incinerators, is given in Figure 1. Figure 2 is a diagram of the plant physical layout.

The secondary portion of the plant can be operated in two modes.

1. Conventional (completely mixed) (Figure 3)

2. Contact Stabilization (Figure 4)

In the conventional mode, all four aerators and associated clarifiers are employed in parallel as fully mixed reactors. Return activated sludge is pumped directly from the final clarifiers back to the primary effluent channel. For contact stabilization, one aerator is converted to a sludge storage and reaeration basin and the associated clarifier is taken out of service. The stabilization basin serves the remaining three aeration basins operated in parallel. Aerators and clarifiers are linked one to one with no cross-coupling. In the contact mode, return activated sludge is pumped from the clarifiers to a sludge storage tank, and from there flows by head differential back to the primary effluent channel. In both modes of operation, sludge wasting was achieved by wasting mixed liquor from the aerators directly to the thickeners.

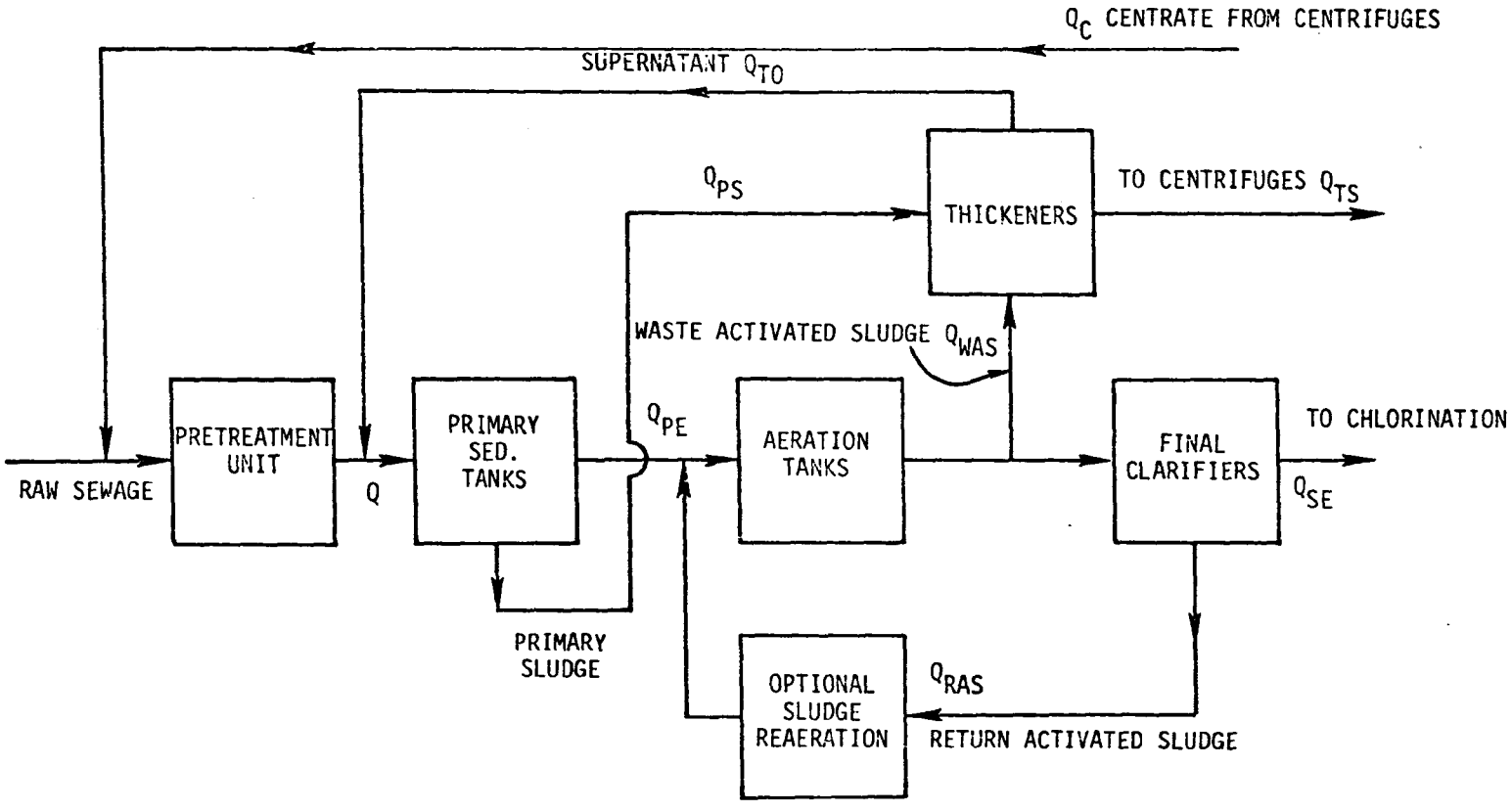

FIGURE 1. SCHEMATIC FLOW DIAGRAM OF THE PALO ALTO SEWAGE TREATMENT PLANT

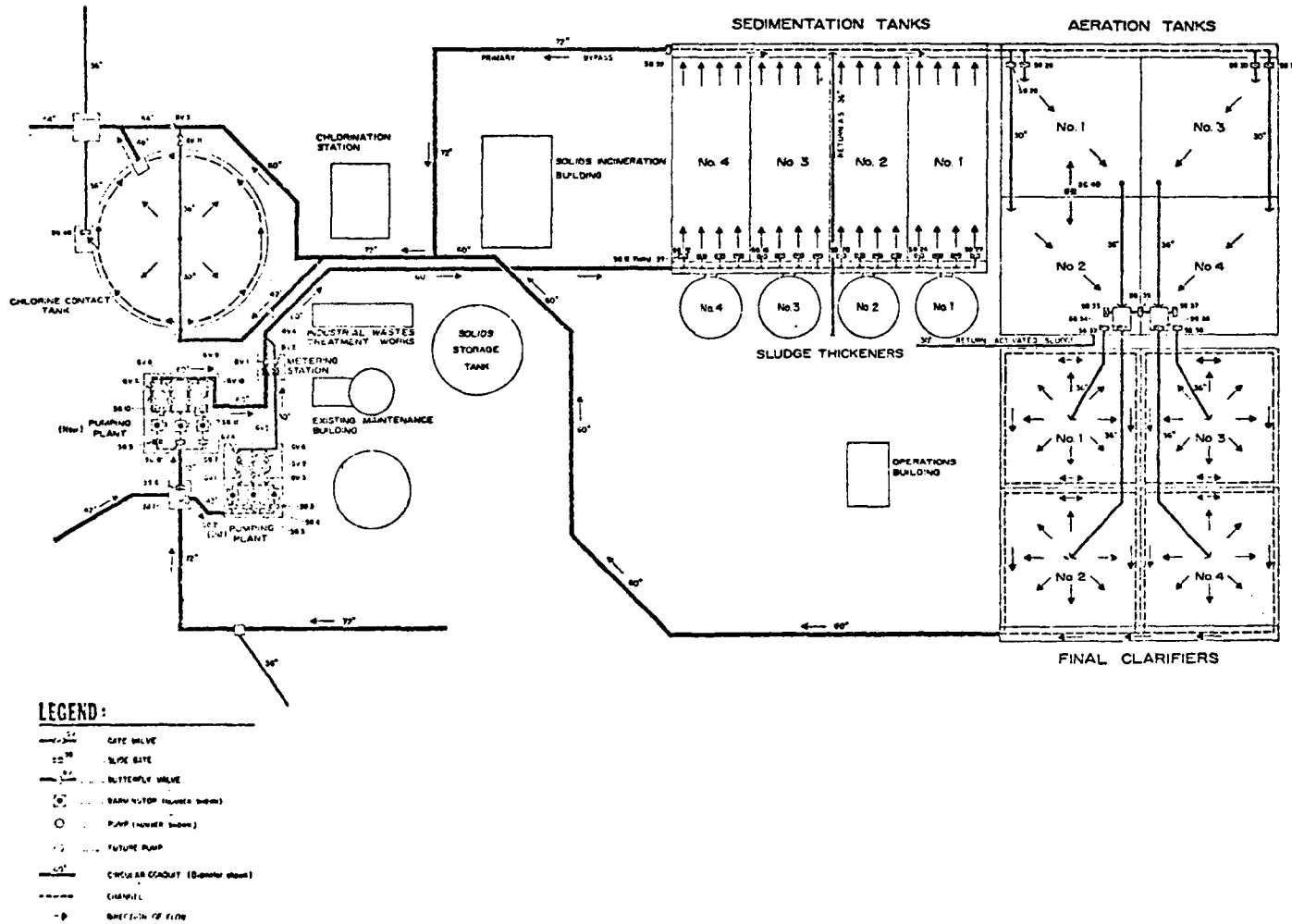

FIGURE 2. SEWAGE FLOW DIAGRAM

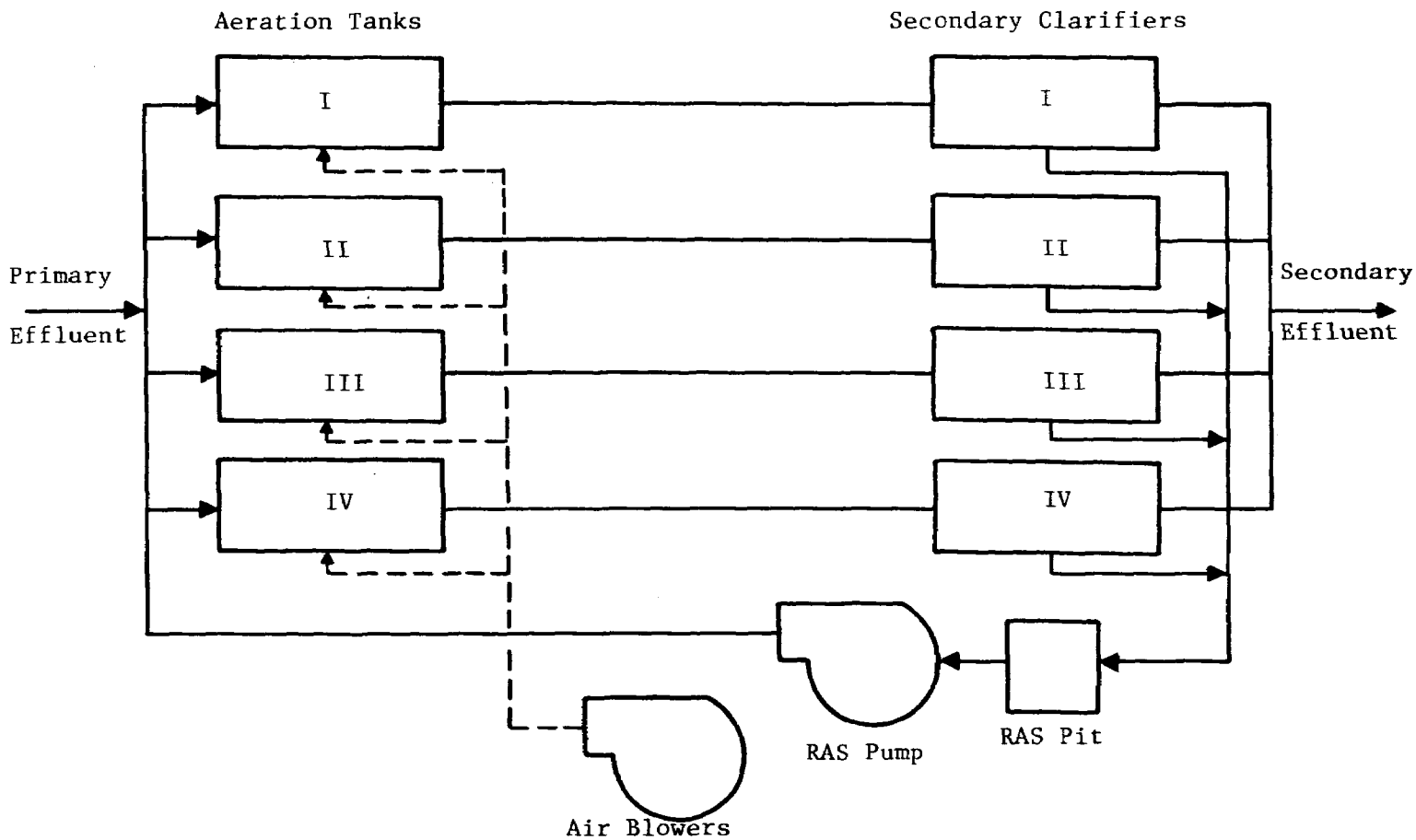

FIGURE 3. PROCESS FLOW SHEET FOR THE ACTIVATED SLUDGE (CONVENTIONAL MODE)

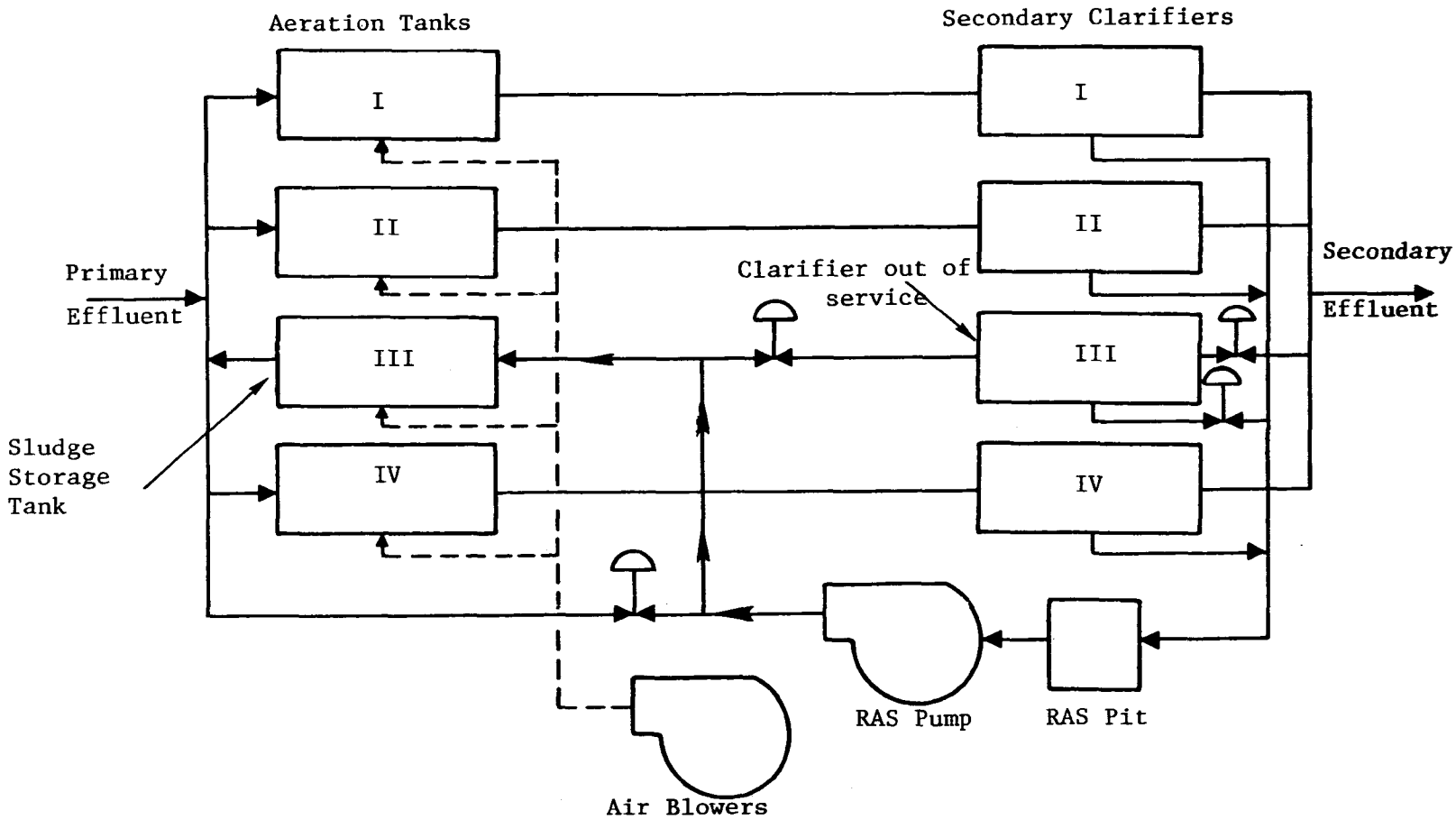

FIGURE 4. PROCESS FLOW SHEET FOR THE ACTIVATED SLUDGE SYSTEM (CONTACT STABILIZATION MODE)

SECTION IV

PHASES OF THE PROJECT

The Palo Alto Computer Project was divided into the following phases:

- Computer Installation
- Software Development
- Instrument Installation and Checkout
- Control Algorithm Design
- Control Algorithm Evaluation

The first two phases, computer installation and system software development, were done in sequence, and their completion was required in order to effectively carry out the remaining phases. The remaining phases, instrument installation and checkout, control algorithm design, and control algorithm evaluation were carried out concurrently with respect to each control system.

Installation of the computer system involved provision for proper power and grounding, the layout, design, and connection of process signals, and checkout of all components of the system. The computer was an IBM System/7, with 16K words of main storage and 2.5 million words of disk storage. Additionally, a teletype, a card reader, and a magnetic tape drive were provided. The analog/digital subsystem consisted of 32 analog inputs, 80 digital inputs, and 32 digital outputs.

The system software development was a joint effort between IBM and Systems Control, Inc. An IBM Systems Engineer was assigned to work onsite to develop the necessary software. The principal components of the system software were:

- Scan
- Limit Check and Alarm
- Disk Write
- Log
- PAX Monitor

The most significant effort was the development of the PAX monitor. The program was the operating system that allowed foreground/background processing. Thus, new control systems and data management programs could be added and tested concurrently with existing scan and control programs.

The instrument installation and checkout phase involved both existing instruments (as per original plant construction), and new instrumentation. The existing instrumentation included for control were:

- Magnetic Flow Meters
- Air Flow Meters
- D.O. Probes

These instruments had to be calibrated and checked periodically as part of the scan computer program. The additional instrumentation particular to this project included:

- Suspended Solids Meters
- Respirometer
- TOC Analyzer

These instruments also had periodic maintenance and calibration requirements in addition to initial installation and checkout.

There were five major control systems designed for the full-scale, activated sludge, treatment plant at Palo Alto. Each control system was intended to demonstrate the automation of certain functions within the process. The goal was to show that an automatic control system will aid the operator in improving the overall quality of the plant effluent and/or demonstrate some reduction in operating costs. The major control schemes were:

- Aeration Tanks DO Control
- Aeration Tanks Control
- F/M Control using Air Flow Rate as a Measure of Food Uptake with DO control (Air/RAS)
- F/M Control using Respiration Rate as a Measure of Food Uptake with DO control (Respirometer/RAS)
- F/M Control using Primary Effluent TOC as a Feedforward Measure of Food Uptake with DO control (TOC/RAS)

Improved removal efficiency was expected because the microbiological growth environment within the secondary system is more closely regulated under automatic control. The diurnal variations of flow and organic loading generally cause fluctuations in F/M values and oxygen transfer rates, which in turn reduce the overall efficiency of the plant. If, on the other hand, the oxygen transfer driving force (DO concentration) and the F/M are maintained at constant values, the growth environment is optimized, and consequently more soluble organic material will be oxidized.

Operating costs benefits can be realized since, by following the fluctuations in loading, equipment power usage can be reduced in off-peak hours. A constant level of operation, by contrast, will necessarily consume larger amounts of electricity than is actually required for off-peak BOD loads, and therefore excess capacity is being used unnecessarily for a significant amount of the time.

Evaluation of control algorithms was performed by analyzing extensive process and laboratory data collected over a 30-day test period for each controller. Similar data representing manual operation for equivalent periods was also collected and used for comparison purposes. Process data was automatically monitored and logged every two minutes by the computer. Laboratory results were composed of composite daily samples of important plant process streams for 27 days of non-intensive testing and bi-hourly samples for the last three days of intensive testing.

Intensive test data allowed evaluation of the controller performance in regulating tasks through the diurnal changes in loading and flow. Month-long summary data provided the means for comparing average values of:

- Removal Efficiencies
- Absolute Levels of Effluent Contaminants
- Operating Costs

Controllers were first evaluated for their success in achieving their design goal (DO regulation, MLSS regulation, F/M regulation). Then, judgment was made of that control-design goal's impact on effluent quality improvements and/or operating cost savings as compared to manual operation. Finally, the benefits, if any, derived from a particular control algorithm were weighed against all the costs of implementing that control to determine if it was indeed advantageous for waste water treatment.

SECTION V

CONTROL ALGORITHM DESIGN

Control algorithms for the various experiments were designed for, and implemented on, a digital computer with direct input of process instrumentation measurements. Algorithms incorporated features designed to handle such real-time control constraints as measurement availability, smooth manual-to-automatic transition, and limited control authority, as well as accomplishing the performance design goals for each control strategy. For the demonstration project, however, the actual control action was not performed directly by the computer; rather, a plant operator was notified of desired control action whenever the process variable exceeded selected limits. The operator would then make the necessary corrections as indicated by the computer. This "man in the loop" procedure was adopted for these reasons:

- With the experimental nature of the strategies, it was felt some judgment should be exercised before a control action was made.

- Since the plant was not specifically designed for automatic operation, existing blower, pump, and valve-control devices are not amenable to direct computer operation without considerable additional equipment.

The mathematics of the control schemes, dissolved oxygen control (DO), and mixed liquor suspended solids control (MLSS) are independent of the two plant operating configurations. Both the DO and the MLSS control strategies were evaluated in the modified contact stabilization mode. The remaining schemes, air flow rate as a measure of food uptake (Air/RAS) and respiration rate as a measure of food uptake (Respirometer/ RAS) were evaluated in the completely mixed configuration because of operating difficulties with the modified contact stabilization configuration.

DISSOLVED OXYGEN CONTROL

The system for maintaining sufficient DO in the completely mixed aerators of the contact configuration is shown schematically in Figure 5*. It is desirable to keep the DO at a level in the range between 0.5 and 1.5 mg/l for most efficient operation. Effluent quality deteriorates for lower DO levels due to problems related to microorganism death or changes in culture which may lead to bulking sludge. Excessive aeration can create poor sludge-settling characteristics as a result of floc shearing or changes in microorganism culture, and effluent quality is again adversely affected.

*Note: the DO controller can be used, without alteration either for the contact stabilization or conventional modes of operation.

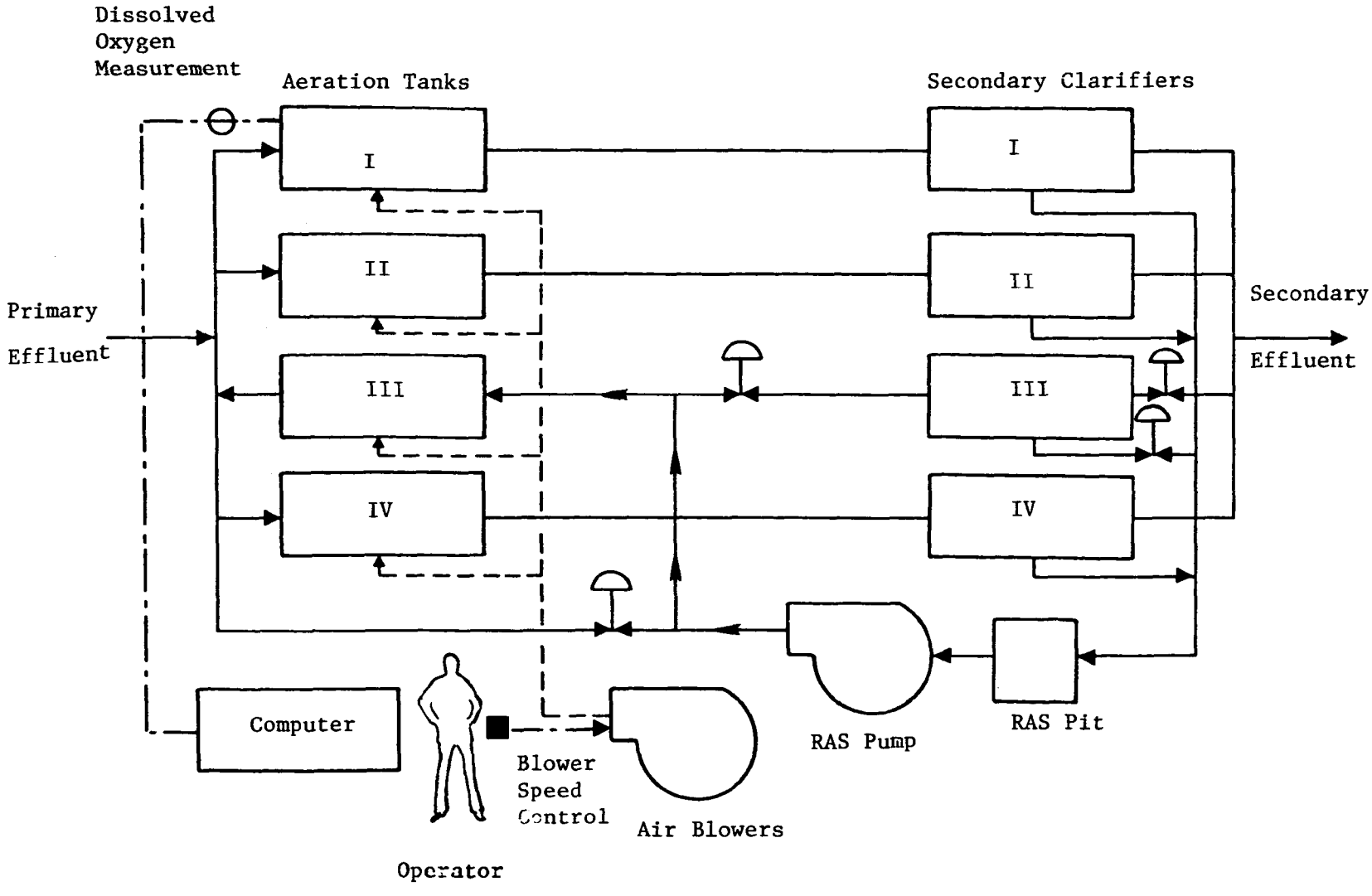

FIGURE 5. SCHEMATIC DIAGRAM OF OXYGEN CONTROL SYSTEM (ILLUSTRATED FOR CONTACT STABILIZATION MODE)

Within the above mentioned range, variation in the DO level does not have a significant bearing on effluent quality. However, increased costs are incurred in supplying additional air to hold a higher DO level than the minimum level for satisfactory treatment. Since oxygen consumption is dependent on the condition of the biological mass and on the BOD loading which varies throughout the day, the air supply rate must be varied to achieve the constant DO level necessary for best cost efficiency consistent with good treatment. The DO controller changes the airflow rate automatically in response to changing oxygen demands and thereby maintains the desired optimum DO level.

Figure 5 indicates that the DO control algorithm was set to control the air flowrate to only a single aeration tank based on the measurement of DO in the tank. The distribution of air to the other three tanks, and therefore the maintenance of an acceptable DO level, was performed by periodic manual adjustment of the butterfly valves such that all DO levels on the tanks used for aeration were equal. Separate control loops for each aeration tank were not feasible at Palo Alto since there was no convenient way of independently adjusting the four airflows.

In essense, the DO control algorithm was a conventional proportional-plus-integral (PI) process control mechanism operating on the DO measurement from one aeration tank. The control mechanism for changing air flow rate to equal the calculated control demand was carried out by altering the air blower speeds. Changing the blower speeds in response to commanded flow changes for one aerator altered the air supply to all aerators in approximately the same proportion, thus maintaining nearly equal DO levels in all tanks. As discussed earlier, implementation of the control commands was through the plant operators who were responsible for actually setting the computer-calculated flow rates by adjusting blower rates and/or putting blowers in and out of service.

Control algorithm computations carried out in the computer to determine the air flow rate necessary to maintain the desired DO level begin with the raw DO signal-inputs to the computer. This signal was sampled at 6 second intervals by the A/D system. A digital first order equation having the form

$$DO_{f_n} = DO_{f_{n-1}} + (1-\alpha)DO_{raw_n} \qquad (1)$$

processes this 6 second data, further reducing the high-frequency noise content to yield a smoothed measurement, DO_f. The value $\alpha = .97$ was used; this value is equivalent to a filter time constant (T) of 3.5 minutes. The relationship between the averaging factor (α) and the time constant (T) can be found from the following derivation.

$$DO_f = \frac{DO_f}{T} + \frac{K}{T} DO_{raw} \qquad (2)$$

where T is the filter time constant and K is the gain. With a sampling interval of Δ minutes, the solution for $DO_f(t + \Delta)$ in terms of $DO_f(t)$, where t is real time and s is a dummy integration variable,

$$DO_{f(t+\Delta)} = e^{\frac{\Delta}{T}} DO_f(t) + \left(\int_0^{\Delta} e^{\frac{s}{T}} ds \right) DO_{raw}(t) \qquad (3)$$

for the assumption that $DO_{raw}(t)$ is constant over $(t, t+\Delta t)$. With a 6 second scan time ($\Delta = 1/(10)$ minute)), the equation for α at a time constant of T minutes, is

$$\alpha = e^{-\frac{\Delta}{T}}.$$

The algorithm used on the DO signal is the 'velocity' form of the PI algorithm requiring the controlled variable error value and first derivative. This form eliminates the problems of "wind-up" that can result with control authority limitations and integral control action. A polynomial filter is used to obtain the required derivative of the filtered DO signal. This filter uses the past four filtered DO values and fits a second order polynomial to the values to minimize the mean square residuals. In equation form, this is

$$\hat{DO}_{t-s} = \sum_{i=0}^{2} a_i s^i \quad 0 < s < 3\Delta \qquad (4)$$

and a_2 is a polynomial constant. $\hat{DO}$ is the output of the polynomial filter, DO_f is the output of the first order filter, and the a_i values are chosen to minimize

$$\min_{a_0 \ldots a_3} \left[\sum_{i=0}^{3} \left| \left| DO_f(t-i\Delta) - \hat{DO}(T-i\Delta) \right| \right| \right] \qquad (5)$$

The outputs of the polynomial filter are estimates of the DO level, its first and second derivatives. These are calculated from the quadratic approximation, as follows:

$$\hat{DO}_t = a_0 \qquad (a)$$

$$\hat{\dot{DO}}_t = \frac{d\hat{DO}}{dt} = a_1 \qquad (b) \quad (6)$$

$$\hat{\ddot{DO}}_t = \frac{d^2\hat{DO}}{dt^2} = 2a_2 \qquad (c)$$

The estimate for DO is then subtracted from the setpoint, SPT, to provide an error signal, $\hat{e}_t$

$$\hat{e}_t = SPT - \hat{DO}_t \tag{7}$$

The estimates are input into the 'velocity' PI controller which is designed to compute the required change in the air flowrate, ΔQ_A

$$\Delta Q_A = K(K_1 \dot{e} + K_2 e) \tag{8}$$

$$= K(-K_1 \hat{\dot{DO}} + K_2 e)$$

where $\dot{e}$ = the first derivative of the error signal

K_1 = is the proportional band gain

K_2 = is the integral gain

The choice of tuning constants is made by evaluating the open-loop response of the DO to a step change in air flowrate, Q_A. The details are as follows. Assume the DO dynamics can be modelled as first order; then

$$\dot{DO} = \frac{dDO}{dt} = -\frac{1}{T} DO + \frac{K^*}{T} Q_A \tag{9}$$

A regular PI control algorithm will have the form

$$Q_A = K'(K_1 e + K_2 \int e) \tag{10}$$

Differentiating the DO and control equations, and substituting for Q_A, it is found that

$$\ddot{DO} = \frac{d^2DO}{dt^2} = \frac{1}{T} \dot{DO} + \frac{K^*}{T}(-K'[K_1 \dot{DO} + K_2(SPT-DO)) \tag{11}$$

Collecting terms

$$\ddot{DO} + \left(\frac{1}{T} + \frac{K^*K'K_1}{T}\right)\dot{DO} + \frac{K_2K^*}{T} DO = \frac{K^*K_2}{T} SPT \tag{12}$$

The dynamics of the closed loop DO-air flow rate system can then be specified. Usually a critically damped response is desired. There is considerable redundancy in the controller coefficients, and some can be assigned values <u>a priori</u>.

The velocity controller is derived from the PI controller as

$$\dot{u} = \frac{\Delta u}{\Delta t} = K'(K_1\dot{e} + K_2 e)$$

$$\Delta u = \underbrace{(K'\Delta t)}(-K_1\dot{DO} + K_2 e) \tag{13}$$

where K = overall gain, and u is velocity, and Δt is the controller operating interval of approximately every 1 to 2 minutes for the DO system.

The final values for the controller gains were derived from on-line tuning after they had been originally set by assuming a 5 minute process-time constant. Setpoints used for the controller were 1.0 and 0.75 mg/l DO, with the first value used in the dry season experiments and the second for the wet season.

In actual operation of the controller, with commanded changes in air flowrate calculated every one or two minutes, excessive supervision and action would be required of the operator if every small command change was performed. Therefore, a dead band on control commands is incorporated in the controller to reduce the work load of small random control changes induced merely by residual measurement noise in the control signals.

The deadband is implemented by

$$\Delta u_c = \begin{cases} 0 & |\Delta u| \leq \Delta u_{deadband} \\ \Delta u & |\Delta u| > \Delta u_{deadband} \end{cases} \tag{14}$$

Figure 6 is a block diagram of the complete DO control algorithm loop. The items within the dotted line are calculations performed by the computer. Various additional checks and procedures are incorporated in the real time control over and above the specific algorithm calculations to insure proper handling of various operating-environmental changes:

1. Controller will disable if valid measurements of DO and the current total air flow rate are not available.

2. Controller must be enabled manually once it has been disabled.

3. In the enabling process, the current DO measurement is used for the initial setpoint to assure a smooth transition from manual to automatic control. The set-point can subsequently be changed manually to the desired value.

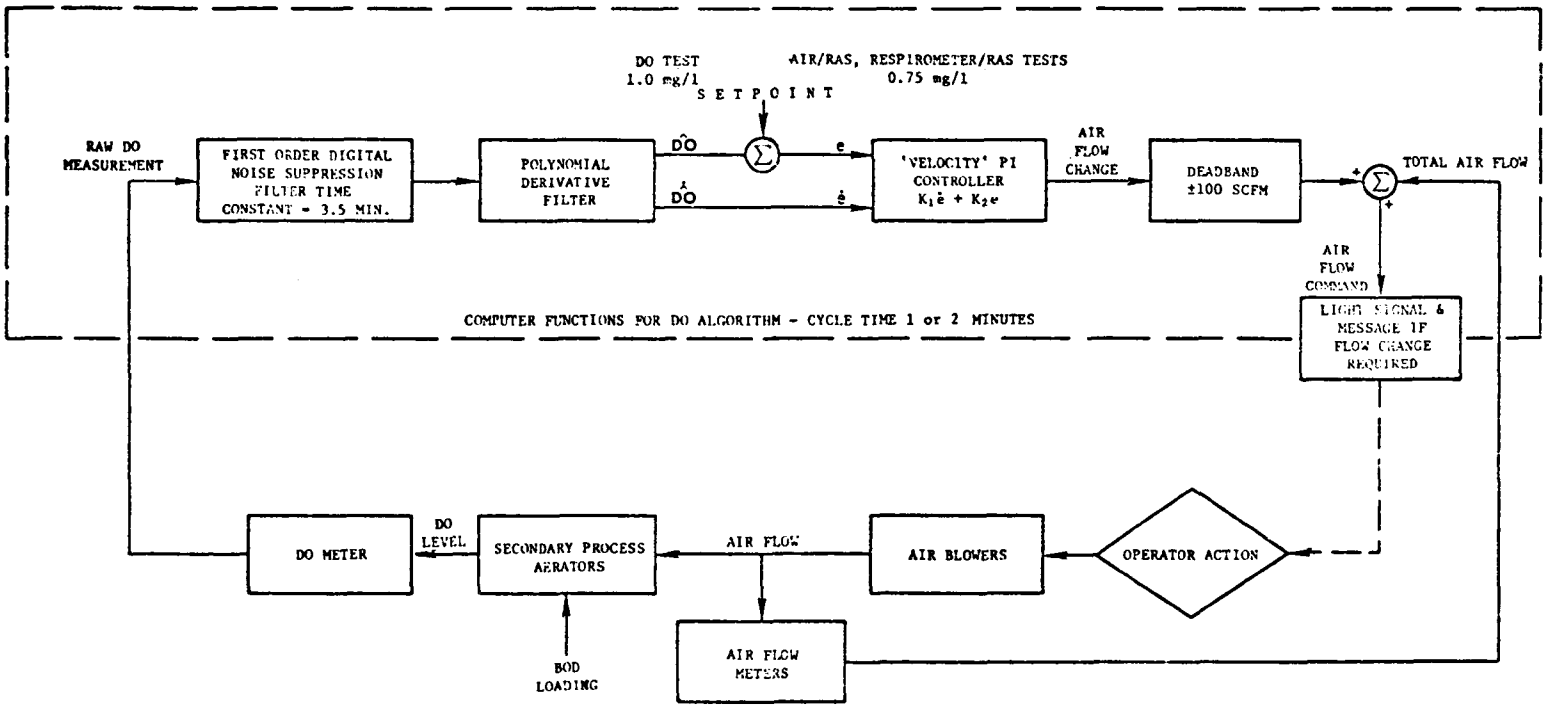

FIGURE 6. DISSOLVED OXYGEN CONTROLLER BLOCK DIAGRAM

A detailed flow chart of the complete controller algorithm and operating logic is given in Appendix A.

When the controller is functioning, the operator is alerted by an alarm light and is notified of a command change of specified size by the computer teletype. The light goes off on the next control cycle if no further command change is required.

MLSS CONTROL

The secondary treatment aerator's MLSS controller was originally intended as a component in the various forms of F/M control based on food uptake. A setpoint for MLSS was selected, and the MLSS controller using a MLSS meter as the primary sensor then adjusted the return activated sludge to maintain the desired MLSS level. The contact stabilization configuration for plant operation was employed during this phase.

Contract stabilization treatment was, however, abandoned after the MLSS test period as a result of unsatisfactory plant operation.* The decision to return to conventional, completely mixed aeration with direct sludge recycle from secondary clarifiers was made by plant personnel with agreement of the EPA Cincinnati laboratory staff. Therefore, the MLSS controller (although designed, tested, and evaluated) was not utilized for its ultimate purpose. Results are still presented here, however, since they may prove useful if the plant operational problems are overcome or are not present at another facility.

The form of the MLSS control algorithm is completely analogous to the DO algorithm. The basis is, again, a standard proportional-plus-integral process controller. In this case, the measurement is MLSS. Solids concentrations are measured only in aerator 1, but this measurement is representative of all the aerators since they are fed from a common influent channel. The control mechanism is the RAS pumping rate which is controlled by operator adjustment of RAS pump speeds. First order, low-pass and polynomial filters are again used to condition the measurement. The velocity form of PI control is used, as well as the dead band on the calculated control-command output.

Tuning the MLSS controller follows the same procedure as for the DO control loop, except that the process time constant is on the order of four or five hours. Controller cycle time is set at 15 minutes. Operator notification of when an RAS flow rate change is needed is again accomplished by means of a light signal.

---

*Excessive floating material thought to be dead microorganisms was observed in the secondary clarifiers. The sludge storage basin was thought to be the source of the problem since the problem largely disappeared as soon as the conventional mode of operation was reinstituted.

Figure 7 is a process schematic for MLSS control. Figure 8 is a block diagram of the MLSS algorithm computations. Real time checks and procedures similar to those used in the DO controller are also performed in the MLSS controller.

1. Valid measurement checks

2. Manual controller enabling

3. Smooth transition from manual to automatic operation.

A detailed flow chart of the complete controller algorithm and operating logic is given in Appendix A.

AIR/RAS CONTROL

The objective of this study was to demonstrate a controlled F/M and to determine the effects of a controlled F/M on secondary treatment removal efficiency. Conventional manual operation maintains essentially a constant MLSS, and operates at an average F/M, based on daily average food and microorganism levels. In fact, however, plant loading varies quite significantly throughout the course of a day; thus, there are periods when the F/M value exceeds its average value. The three F/M oriented algorithms are:

- Air/RAS
- Respirometer/RAS
- TOC/RAS

In all three, RAS flow is used to adjust MLSS in order to keep F/M constant as the food utilization or aerator loading varies. The primary difference among the three controllers is in the means used to measure the food.

For the Air/RAS Controller, the air supplied to the completely mixed secondary treatment process is used as an indirect measure of biological respiration and therefore of the substrate (food) utilization, dF/dt. (See Appendix section B.2 for detailed development of the relation between air flow and substrate utilization).

$$\frac{dF}{dt} = c_1 Q_A + c_2 \qquad (15)$$

where c_1 = regression coefficient calculated using plant operating data

c_2 = regression coefficient calculated using plant operating data

Q_A = air flow

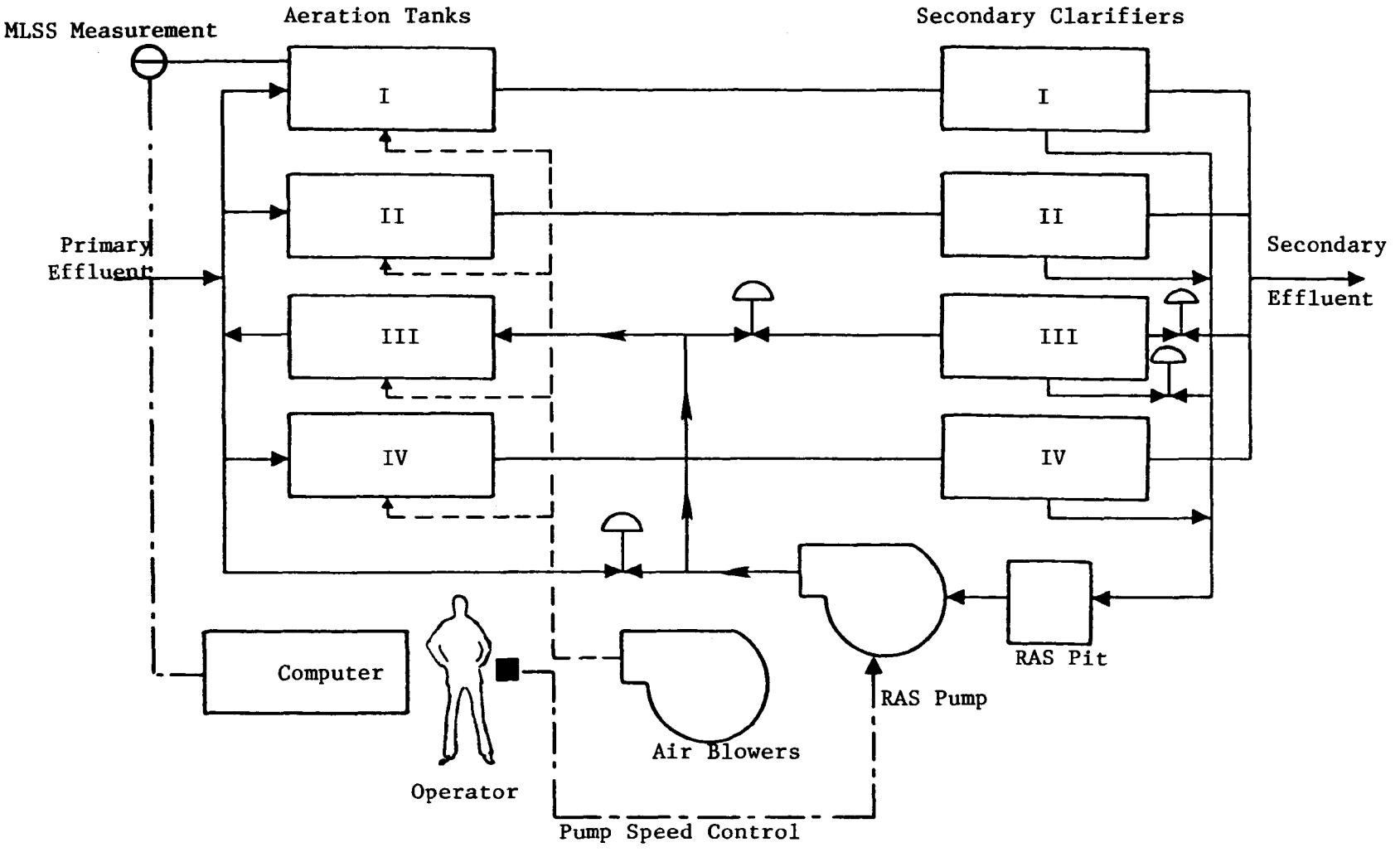

Figure 7. SCHEMATIC DIAGRAM OF THE MLSS CONTROL SYSTEM (ILLUSTRATED FOR CONTACT STABILIZATION MODE)

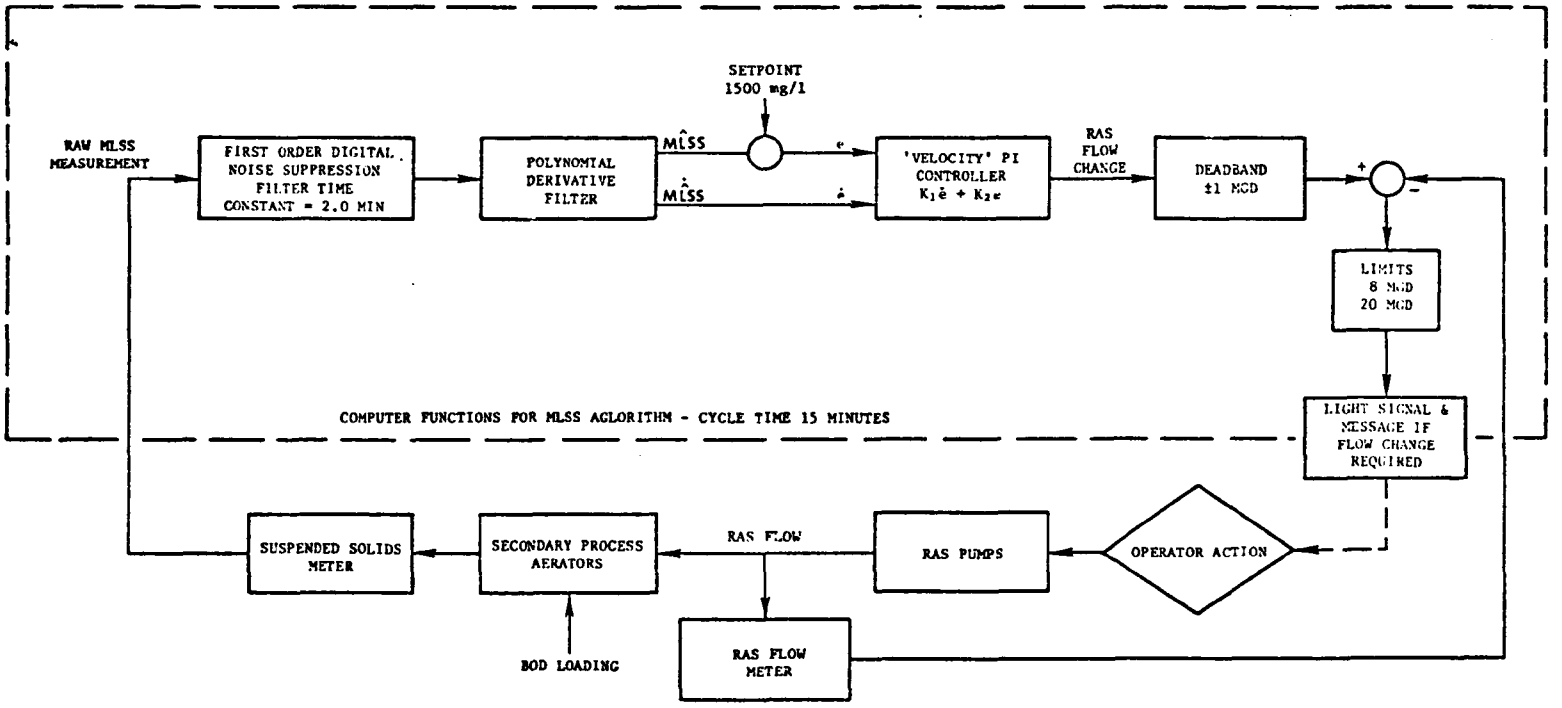

FIGURE 8. MLSS CONTROLLER BLOCK DIAGRAM

With the desired F/M, the MLSS level necessary to achieve that ratio can be calculated. The RAS flow is then adjusted to bring the actual MLSS to the desired value.

Originally, it was intended that the MLSS controller would be used in cascade to bring about the desired changes in MLSS. The setpoint to the MLSS controller would be the required solids level for a constant F/M ratio, as calculated by the Air/RAS controller. As previously discussed however, the MLSS controller is incompatible with the plant in the completely mixed mode of operation during the F/M ratio controller tests. The incompatibility is caused by the fact that the wasting rate and MLSS concentration are not independent. Appendix section B.4 contains the derivation of the relation between F/M, U, and the mean cell residence time, θ_c, which could be used to set the sludge waste rate:

$$U = \frac{dF/dt}{XV_a} = \left[\frac{f_v}{Y}\,\frac{V_a+V_c}{V_a\,\theta_c} + K_d\right] \qquad (16)$$

where K_d is the endogenous respiration rate constant, Y is the yield coefficient and f_v is the ratio of the volatile to the total suspended solids. However, the dynamic biological model constants K_d, Y, and f_v are subject to considerable variability and θ_c is not known precisely, so that U is subject to variability.

Therefore, the MLSS controller was not used in cascade with the various forms of F/M control. Instead, the RAS flow was set based on what the MLSS solids level should be in a steady state operation. This procedure ignored the concentration lag inherent in the aerator tanks' retention time, so there was some delay between changes in the actual MLSS and the commanded value. The advantage of the steady state operation approach is, however, a self-regulating characteristic with regard to the average F/M and the final clarifier sludge level.

The algorithm for determining the RAS flow, Q_{R_c}, is

$$Q_{R_c} = \frac{Q}{\frac{X_R}{X_c} + 1} \qquad (17)$$

and a detailed derivation of the algorithm, based on mass steady state balances around the aerators, is given in Appendix B.1. X_R is the average RAS suspended solids concentration obtained from plant laboratory-monitoring analyses and is assumed constant. The desired MLSS setpoint, X_c, is derived from Equations 15 and 16.

$$X_c = \frac{dF/dt}{UV_a} = \frac{[c_1 Q_A + c_2]}{U\ V_a} \qquad (18)$$

The self regulatory or smoothing feature of this algorithm, with respect to average MLSS level and clarifier sludge level, occurs because of the assumed constant, X_R. In actuality, average X_R varies in proportion to the average sludge level in the clarifiers. This means that the average solids returned, $Q_R\ X_R$, will go up when the clarifier sludge level goes up since Q_R (average value) remains relatively constant; this phenomenon automatically regulates the clarifier sludge level. A similar smoothing effect is also produced in the aerators where a constant volume of mixed liquor wasted to the thickener automatically regulates variations in the average MLSS concentration.

Implementation of the Air/RAS control algorithm embodied in Equations 17 and 18 requires measurement of total air flow, Q_A, plant flow, Q, and RAS flow, Q_R. Fortuitously, the measurement of plant flow is at the plant headworks and a thirty minute lag in flow was observed across its primary plant; a feedforward lead of about 30 minutes is incorporated in the algorithm, compensating to some extent for the previously discussed lag inherent in the algorithm.

Figure 9 is a schematic of the F/M control plan. An algorithm block diagram of the Air/RAS form of F/M control is given in Figure 10.

Additional, real time, operation-oriented features of the controller include:

- Deadband on commanded RAS changes
- Measurement validity checks
- RAS command limits
- RAS-pump, suction-pit level control

The controller commands are carried out as described for the MLSS controller with signal-light notification to the operator to change RAS flows by adjusting RAS pump speeds. Deadband is therefore incorporated to avoid frequent, low-level, command changes. Measurement validity is checked every 30 minutes when the controller cycles.

RAS command limits are incorporated primarily for low flow conditions. Insufficient RAS flow (below between 6 to 8 MGD(.023 to .030 Mm^3/day)) causes plugging of the clarifier decanting lines. A procedure necessary to enable even that low-flow limit involves manually choking down the butterfly valves of its clarifier draw-off lines below 10 (.038 Mm^3/day) MGD RAS flow. This procedure keeps the RAS-pit level low enough to maintain sufficient head on the decanting lines to prevent plugging.

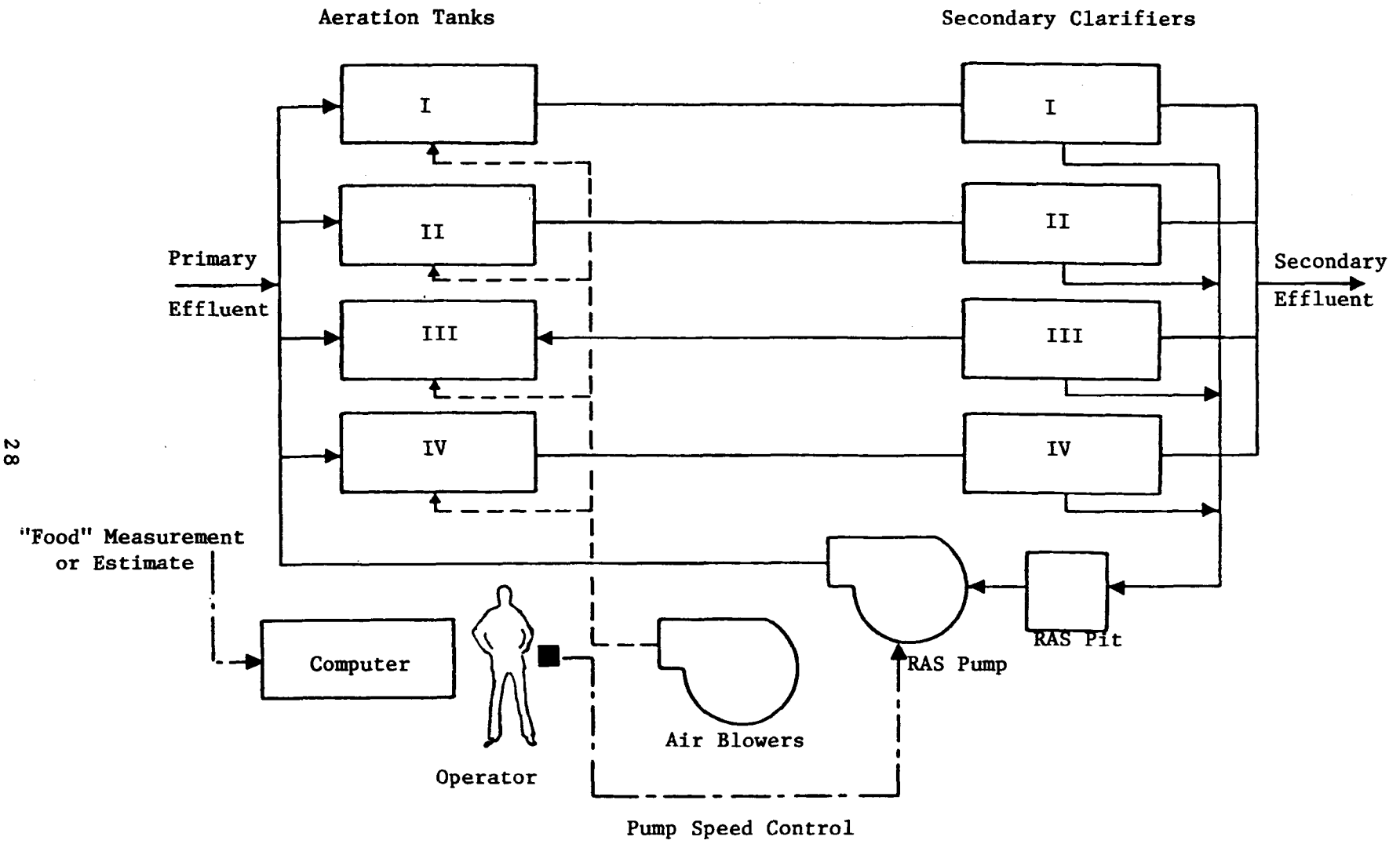

Figure 9. SCHEMATIC DIAGRAM OF FOOD TO MICROORGANISM RATIO CONTROL SYSTEMS (ILLUSTRATED FOR CONVENTIONAL MODE)

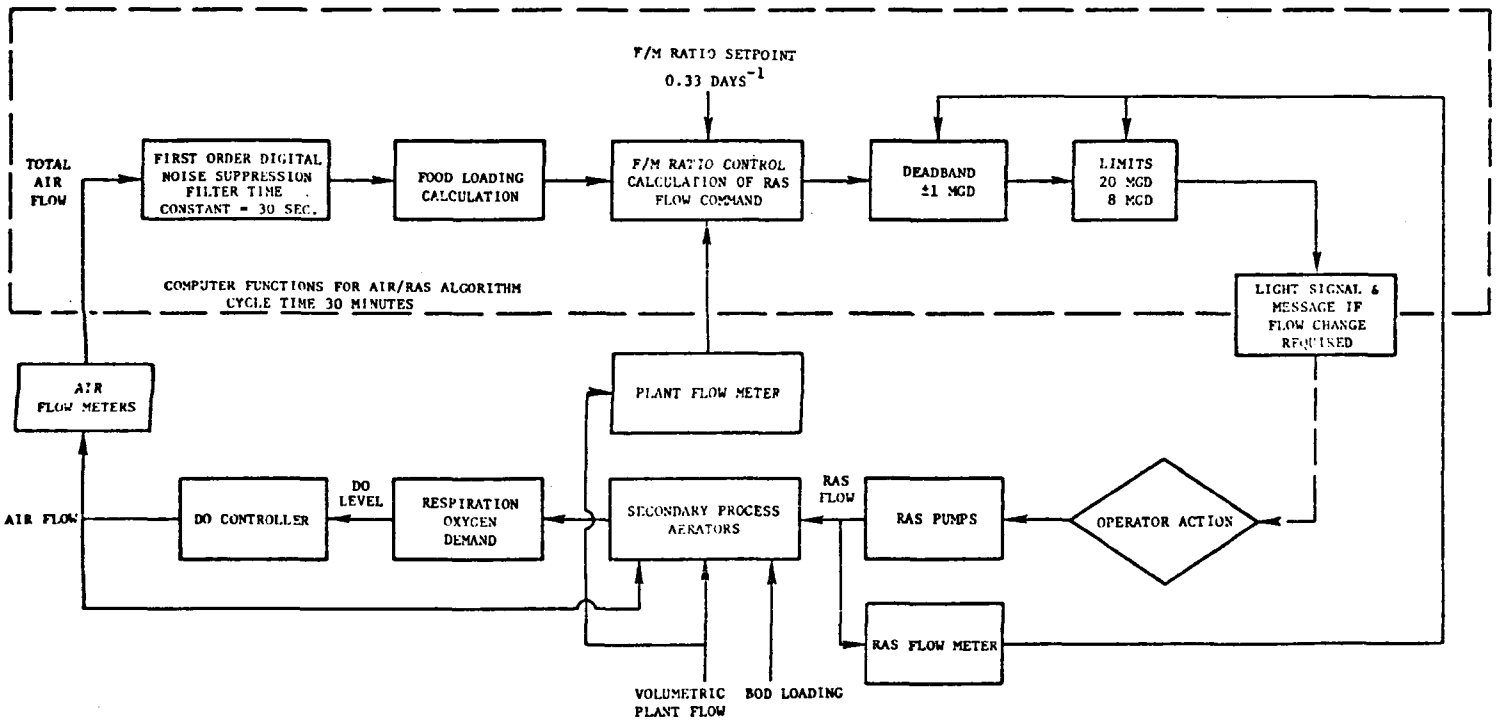

FIGURE 10. AIR/RAS CONTROLLER BLOCK DIAGRAM

The algorithm monitors RAS flow commands and types a message for the operator when a change in valve positions is required.

RESPIROMETER/RAS CONTROL

This algorithm is completely analogous to the Air/RAS controller in that the intent is to maintain a constant F/M value in the secondary aerators. The major difference is in the instrumentation employed to determine the food uptake rate.

Both controllers estimate food uptake from microorganism respiration. Whereas the Air/RAS form uses the air supplied to the aerators as a measure of respiration, the Respirometer/RAS incorporated the Badger Meter Company's "Biological Respirometer" for direct indication of respiration from a sample of mixed liquor. The following relationship between measured respiration rate per unit volume, R, and food uptake is developed for the Badger Respirometer in Appendix section B.5:

$$\frac{dF}{dt} = V_a \left(\frac{R - K_d X}{1.0 - YyL} \right) \tag{19}$$

where V_a is the volume of the aerators. In the Palo Alto plant, values for the parameters in Equation 2.9 are estimated as

$$K_d = 0.05 \text{ days}^{-1}, \quad X \sim 1200 \text{ mg/l},$$

$$Y = 0.5, \quad y = 1.42, \quad L = 0.5$$

so that in the algorithm calculation

$$\frac{dF}{dt} = \frac{1}{.745} \left[R - 2.5 \right] \text{ mg/l hr} \tag{20}$$

Typical readings for R average around 24 mg/l hr.

The Respirometer/RAS algorithm calculations therefore employ the expression for dF/(dt) of Equation 20 in Equations 17 and 18 to determine the RAS flow commands. A block diagram of the controller is given in Figure 11 and is seen to be exactly the same as the Air/RAS, except for the replacement of the air flow measurement by the respirometer measurement. Additional real time checks and procedures common to all the F/M controller are also included:

- Deadband on commanded RAS changes
- Valid measurement checks

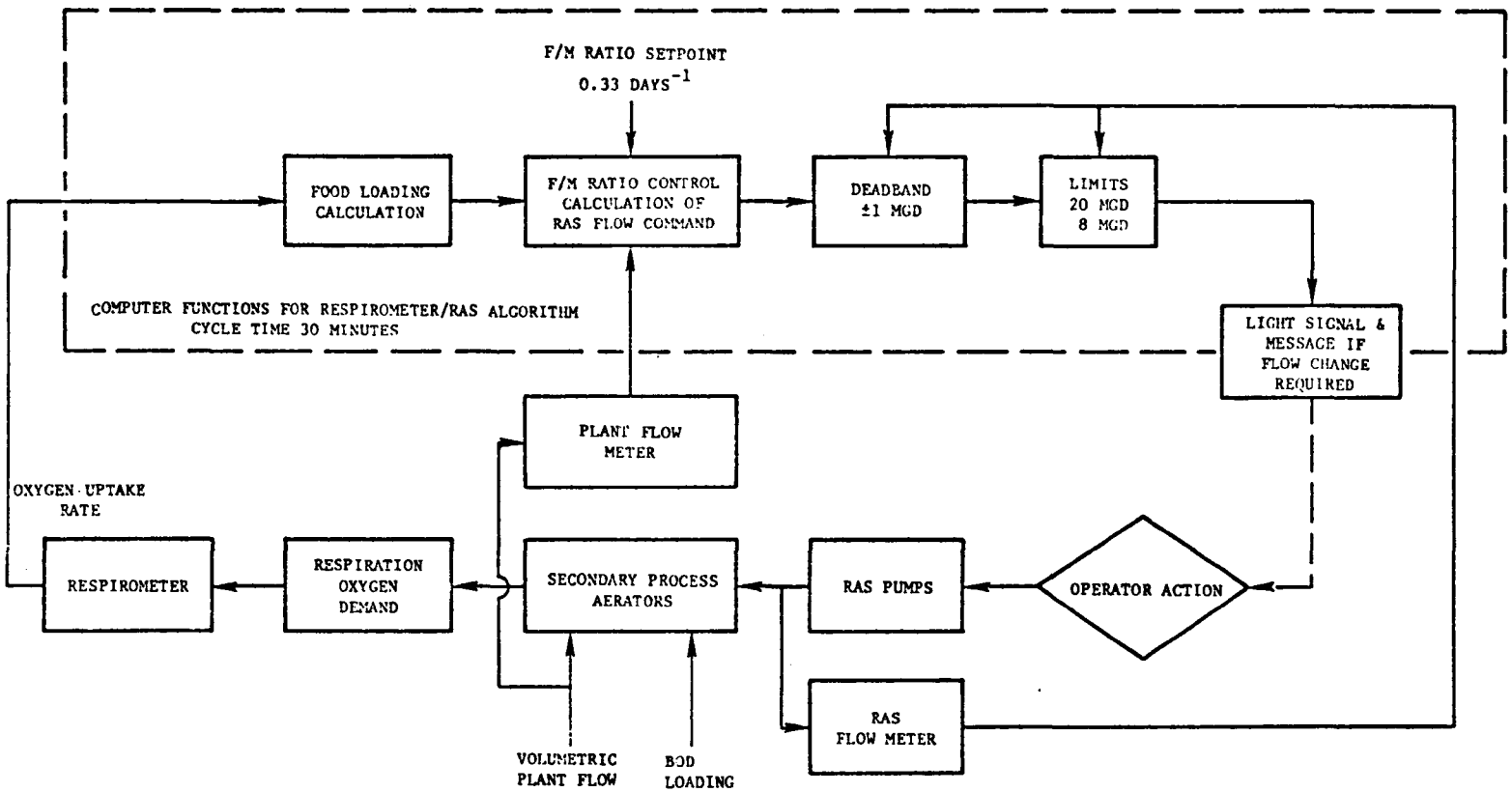

FIGURE 11. RESPIROMETER/RAS CONTROLLER BLOCK DIAGRAM

- RAS command limits
- RAS-pump suction-pit level control

Operator procedures for implementation of command changes is the same as for the Air/RAS controller.

TOC/RAS CONTROLLER

Appendix B.3 details the relationship between secondary treatment loading (food-inflow rate) and biological food utilization. The development shows that there is a lag equivalent to a first order time constant of approximately 10 minutes between food influx and subsequent utilization. For the Respirometer/RAS controller, there is an additional measurement lag of 1 hour in the Respirometer operation. With the Air/RAS, there is a delay of 10 to 20 minutes in the response of the air flow measure of respiration due to lags inherent in the DO controller which adjusts the actual air supply rate. Altogether then, there is a lag in the first two forms of F/M control of anywhere from 20 to 70 minutes between aerator loading changes and actual measurement of the new loading for control purposes.

The intent of the TOC/RAS controller is to avoid these long, food loading, measurement lags and thus improve the response capability of F/M control. This was to be accomplished by an on-line measurement of TOC in the secondary influent. A relationship between instrument TOC measurements and laboratory BOD_5 measurement in the influent, was to be determined, and then a measurement of the incoming load could be calculated as QS_o.

With the QS_o measurement substituted for dF/(dt) in Equation 19, a feedforward MLSS command for F/M control is produced. The expectation was that this feedforward TOC/RAS control would yield a better regulation of F/M by compensating more fully for the measurement lags discussed above and partially for the aerator retention-time lag mentioned previously.

Other features of the TOC/RAS control algorithm are the same as described for the Air/RAS and Respirometer/RAS controllers. Commanded changes in RAS pumping rates were also to be performed in the same manner as for the other F/M controllers. A block diagram of the TOC/RAS control-algorithm design is given in Figure 12.

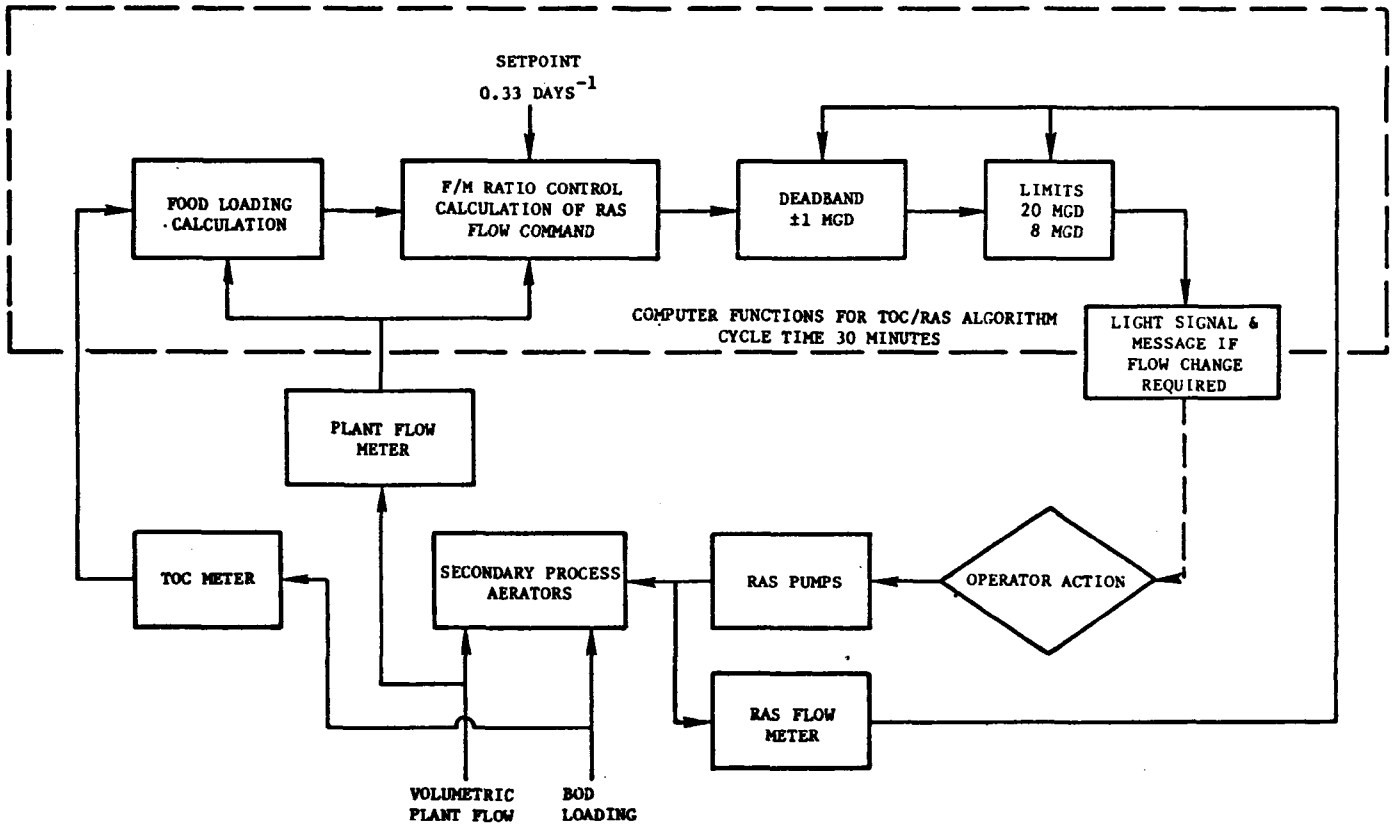

FIGURE 12 TOC/RAS FEEDFORWARD CONTROLLER BLOCK DIAGRAM

SECTION VI

EXPERIMENTAL DESIGN

SCOPE

This section disucsses the experimental plan for accurate comparisons of performance and cost effectiveness of the manually and computer controlled operation of the Palo Alto Wastewater Treatment Facility. The plan defines the data gathering and analysis requirements, as well as the plant operation requirements for each of the phases of the program. Included are details on where each sample was collected, how it was collected, the type of analysis that was performed on the samples in the laboratory as well as the format of data that was inserted into the digital computer.

In formulating the experimental design plan, care was exercised to provide several features which would ensure the validity and utility of the results. These features include:

- Accurate benchmark of the manually operated process by establishing an operating procedure consistent with average operating procedures of manually controlled wastewater treatment plants within the State of California.

- Provision for long-term relative evaluation of each of the control systems in terms of ability to enhance the quality of discharges as well as reduce operating costs.

- Provision for short-term detailed evaluation and analysis of the plant under both manual and automatic control over the complete dynamic range of operation. This will lead to a more complete understanding of the process itself, as well as a quantitative evaluation of performance parameters associated with the control modes.

- Allowance for potential stress on each control system to allow a complete evaluation under normal and abnormal operating conditions.

Specifically, this section describes the general method of testing and an associated time-phased schedule; the manually controlled portion of the test in terms of both the operating procedures to be employed and the data gathering techniques; the automatic control portion of the experiments, again in terms of the operating procedures and data collection methods; and, finally the types of data analysis performed on the collected data base.

EVALUATION PLAN

In order to obtain a performance and cost effective evaluation of the comparison of the plant operating under manual and automatic control, a methodology was established which provided an adequate amount of accurate data concerning the process. The general experimental plan that was used to meet these objectives is outlined in the steps below:

Step 1 - For an initial period of approximately four weeks, the contact stabilization process was controlled manually according to procedures which represent average control of water treatment plants within the State of California (e.g., air-blowing rate was adjusted twice daily). This served as a process benchmark for future automatic control modes. During this period of manual control, data collection and analysis was divided into two phases; a non-intensive phase and an intensive phase. The non-intensive phase of data collection and analysis lasted for approximately three and one-half weeks and was oriented toward obtaining average plant-performance characteristics over an extended time period. Data collected, for example, provided the average, daily, BOD_5 reduction over the period. In addition during this phase, some data, such as suspended solids levels and DO profiles in the aerators, was collected at relatively high frequencies-nominally every two hours. This verified that the plant was operating as designed and that instruments were operating properly and were properly calibrated. The intensive period of data collection spanned a three-day period which represented both the extreme operating conditions of the plant, as well as an average operating condition. The days selected for intensive data collection were Sunday (which represents an abnormally low, flow profile during the day, as well as a different flow pattern from the remaining six week days), Monday (which represents the peak flow condition and most stressing situation for the plant) and Tuesday (which represents an average, daily, flow condition and profile). During this period, all relevant plant-performance data was collected and analyzed on a two-hour basis to provide detailed information concerning the dynamics of the plant (e.g., daily BOD_5, TOC and COD profiles at two-hour intervals at points within the plant). This information was then utilized for both the subsequent detailed comparative analysis of the control modes, in addition to providing detailed information concerning the characteristics of the plant. Details concerning the exact location and frequency of data collection and analysis is provided later.

Step 2 - At the completion of the intensive data-collection phase of manual operation, the first automatic control system (DO control) was activated using the contact stabilization configuration. The DO control system was operated for approximately four weeks to provide (a) sufficient time for transients associated with the change in control strategy to decay and for the plant to assume steady state operation and (b) a large enough data base to perform meaningful comparative evaluation of average plant performance. Data collection and analysis consisted of a

non-intensive phase of approximately three and one-half weeks followed by an intensive phase on the concluding Sunday, Monday and Tuesday. Data collection and analysis was identical to the manual control period with the exception that, in addition to plant performance data, only sufficient samples of parameters, (such as DO level in each of the tanks) required to calibrate sensors were taken during the non-intensive phase.

Step 3 - The next control scheme (MLSS) was evaluated by operating its plant as in Step 2 above with the contact stabilization configuration.

Step 4 - The Air/RAS control scheme was evaluated by operating the plant under the complete mix configuration.

Step 5 - After installation of the TOC analyzer and the respirometer, the Respirometer/RAS control system was evaluated in a manner identical to the procedure given in Step 4 above. Because of difficulties with the TOC analyzer this control strategy was not implemented.

It was felt that the above methodology represented a cost and time effective experimental procedure for the comparative evaluation of the control strategies. It provided for collection and comparison of adequate amounts of data to monitor and compare the process over ranges of operation in a cost effective manner.

MANUAL CONTROL PROCEDURES

The automatic control procedures and algorithms have been described previously. But in order to accurately compare performance and cost of the automatic control systems, it was important that the manual operation of the plant be standardized during the evaluation phase. As described below, the major operating procedures employed at the plant during manual control had been derived from analyses of typical operations of wastewater treatment facilities of comparable size and operation in the State of California. It should be carefully noted, however, that the control policy described below represents a typical method of activated sludge process control; i.e., the procedure is deemed average and is not to be taken as representative of what could be done at Palo Alto. The intent was to determine the average efficiency of Palo Alto's secondary system when operated under a conventional manual control strategy.

The major control operations influencing the secondary process are the air flowrate into the aeration tank, the return activated sludge flowrate into the sludge storage tank and the mixed liquor wasting rate. The control strategy for each of these elements is described below.

The air flowrate to the aerators was adjusted twice daily during manual operation. At 0900 hours each day, the No. 1 and No. 3 blowers were set at full speed, and No. 5 blower set at its minimum speed (for peak flow conditions). There were no changes in the individual tank valve settings.

At 2200 hours each day No. 3 blower was set to its minimum speed and No. 5 blower was shut down. The No. 1 blower remained at full speed for the entire test period.

Summary		Blower		
Control	Time	#1	#3	#5
High Speed	0900 hours	Full	Full	Min.
Low Speed	2200 hours	Full	Min.	Off

It is noted that during all phases of both manual and automatic control operation, the butterfly valves between the blower and the aerators remained fixed.

The RAS flowrate was adjusted once per day during manual operation. This rate was computed each day at 1300 hours based on the 30-minute settled volume. The return rate for the next 24 hours was determined by the formula:

$$Q_R = \frac{Q \cdot (\text{set. vol.})}{1000 - (\text{set. vol.})}$$

where Q_R = return activated sludge flowrate (MGD),

Q = plant flowrate (MGD)

set. vol. = 30-minute settled volume (ml)

For the following (representative) conditions,

30 Minute Settling Test = 250 ml

Expected Plant Flowrate = 25 MGD = Q

the calculation would be

$$Q_R = (25)\ (250)/(1000-250) = 8.33 \text{ MGD } (.032 \text{ Mm}^3/\text{day})$$

The return activated sludge pump speed was then set to return activated sludge at a flowrate of 8.33 MGD (0.032 Mm^3/ day). No adjustments in the return rate were made until the next day at 1300 hours.

The above procedure was adopted based on the consideration that the peak flows occur at approximately 1300 hours and that acceptably representative averages (i.e., 30 minute settling) could be obtained at that time. This method has been used successfully at the plant to this date.

As in completely mixed operation, the wasting rate during operation in the modified contact stabilization configuration was adjusted once daily

during the manual operation. This rate was that required to maintain a mean cell residence time of 10 days and was adjusted each day at 1300 hours. The wasting pump speeds were adjusted to maintain a constant waste mixed liquor flowrate for the next 24 hours. Wasting was accomplished by wasting mixed liquor directly from areator #1. The waste mixed liquor flowrate was computed as follows:

$$Q_{WML}(\#1) = \frac{(5.61)(MLSS_{AVE}) + (1.87)(MLSS\ \#2) - (\theta_c)(Q)(SE_{ss})}{(MLSS\ \#1 - SE_{ss}\ \theta_c)}$$

where SE_{ss} = secondary effluent suspended solids (mg/1)

$MLSS\#x$ = suspended solids in aerator #x (mg/1)

$$MLSS_{AVE} = \frac{MLSS\ \#1 + MLSS\ \#3 + MLSS\ \#4}{3} \text{ (mg/1)}$$

θ_c = mean cell retention time (days)

Q = average plant flowrate (MGD)

Q_{WML} = waste mixed liquor flowrate (MGD)

For the representative parameters given below, the calculation becomes:

MLSS #1 = 2618 mg/1

MLSS #3 = 1926 mg/1

MLSS #4 = 1875 mg/1

$$MLSS_{AVE} = \frac{2618 + 1926 + 1875}{3} = 2139.6 \text{ mg/1}$$

Q = 25.0 MGD (.095 Mm^3/day)

MLSS #2 = 6136 mg/1 (sludge storage)

$$Q_{WML}\ \#1 = \frac{(5.61)(2139.6) + (1.87)(6136) - (10)(25)(30)}{(2618 - 30)(10)}$$

$$= 0.617 \text{ MGD } (.0023\ Mm^3/\text{day})$$

Note that this flowrate is the actual waste-mixed-liquor flowrate from the #1 aerator. To set the actual waste rate, all secondary effluent pumps were shut down, and the WML pump speed was adjusted to obtain the desired flowrate (Q_{WML}).

Daily Sample Collection and Analysis Period (Non-intensive)

During the non-intensive phase of the initial manual-control period, a substantial number of samples were collected and analyzed. This was done to assure that the plant was functioning properly and that all instruments were calibrated and operating correctly. In addition, the

sampling was compatible with a dry run of the intensive sample-collection and analysis phase at the conclusion of the manual control period. Similar sampling was performed during the control studies but not necessarily at the same sample frequency.

The location and method of sample collection is extremely critical to obtain representative laboratory results. Therefore, it was essential that an adequate and uniform procedure be used in collecting samples. All samples were taken by the following procedures, using quart bottles to obtain adequate samples.

Raw Sewage - The sample was taken from the primary influent channel. The first hatch cover (before the thickeners) was removed, and the sample was collected at a depth of 2 - 4 feet (0.6 - 1.2 m).

Primary Effluent - In order to obtain a representative sample of primary effluent, a composite was formed. The composite grab sample was generated by mixing equal volumes from the effluent launders of those primary clarifiers in service.

Secondary Effluent - A grab sample of secondary effluent was obtained from the line connected to the 60 inch (1.5 m) secondary effluent line. This line is downstream of the clarifiers and is itself a composited sample of secondary effluent.

Final Effluent (after chlorination) - A grab sample from the effluent junction box was taken. This sample was taken at a depth of 2 feet (1.2 m) to ensure mixing.

Mixed Liquor - A separate sample from each of the three aerators was taken. The samples were collected at the following locations (see Figure 13) platforms #1B, #3C, #4A at a depth of 2 - 4 feet (0.6 - 1.2 m). These sample locations were selected since they are the farthest locations from the mixed liquor in flows. The samples were taken for the purpose of DO probe and MLSS meter calibration. During conventional operation, an addition sample was taken from aerator 2, at platform 2A.

Return Activated Sludge - A grab sample from #2A aeration platform (sludge aeration tank) was taken at a depth of 2 - 4 feet (0.6 - 1.2 m). During conventional operation the sample was taken from the RAS pit.

For the initial non-intensive manual operation phase, all samples indicated above were collected daily on the even hours (i.e. 00,.02,..., 2200 hours) and composited on a 24 hour basis. During the period of automatic operation the primary effluent, secondary effluent, final effluent, mixed liquor and return activated sludge were sampled three times a day nominally in the midpoint of each shift.

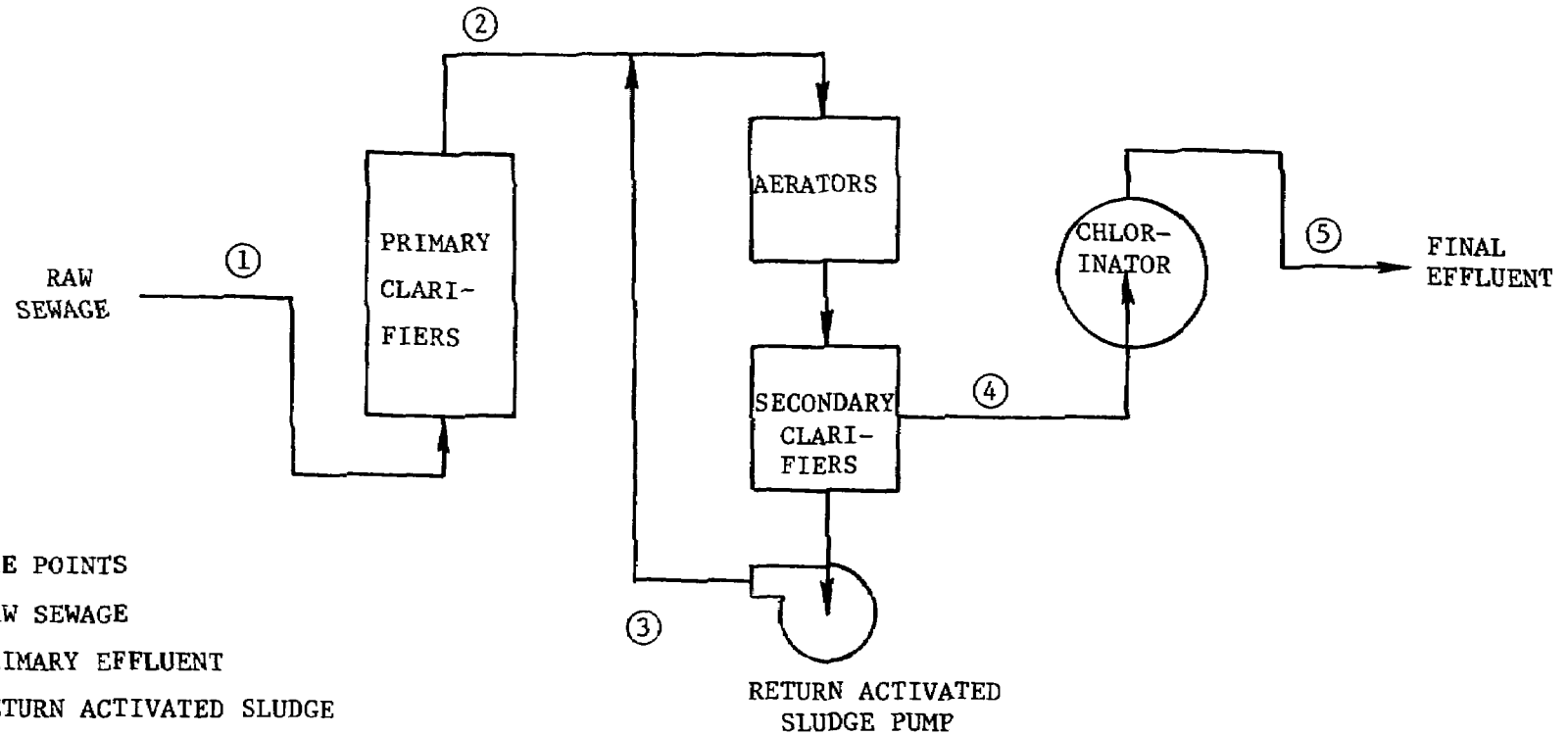

SAMPLE POINTS

1. RAW SEWAGE
2. PRIMARY EFFLUENT
3. RETURN ACTIVATED SLUDGE
4. SECONDARY EFFLUENT
5. FINAL EFFLUENT

SCHEMATIC DIAGRAM OF THE PLANT
WITH PROCESS SAMPLE POINTS INDICATED
FIGURE 13

During this period, the raw sewage, primary effluent, secondary effluent, and final effluent were analyzed every 2 hours for pH. These samples were then composited throughout the day and analyzed the following day. The composited sample was also analyzed for suspended solids, BOD_5, TOC, COD, NH_3, NO_2, NO_3, and ortho phosphates.

In all cases the collected samples were analyzed according to accepted methods. Where possible, methods indicated in Reference (3), "Standard Methods for the Examination of Water and Waste Water," were utilized. Specifically, the sample analyses for the quantities of interest were as indicated in Table 1.

Table 1. ANALYTICAL TECHNIQUES

Quantity Desired	Sample Analysis Technique
Suspended Solids	Gravimetric Method
BOD_5	Winkler Method - Azide Modification
COD	Potassium Dichromate Oxidation
TOC	TOC Analyzer (Envirotech)
NH_3	Specific Ion Electrode
NO_3	Photometry
NO_2	Photometry
Ortho Phosphates	Photometry
pH	Electrometric
30 Minute Settling	Standard Method
Sludge Volume Index (SVI)	$\left(\frac{\text{30 min. settling vol. in aerator}}{\text{suspended solids in aerator}}\right) \times 1000$

Bihourly - Data Collection and Analysis Period (Intensive)

The data collection and analysis performed during the intensive sampling of the initial manual-control period was intended to provide: (1) detailed information regarding the processes within the plant, and (2) a data base for detailed comparison of the control system effectiveness. The data gathered during this phase was used to generate the important statistical-performance parameters for the analysis phase of the study. Similar intensive sampling was also performed during the control studies.

The samples were collected from those locations described previously. Twelve samples were collected daily, on the even hours. In addition, during the automatic control operation and for the five-day period prior to the Sunday, Monday or Tuesday intensive data collection, the mixed liquor and return sludge were sampled four times during the day shift for the purpose of calibration of sensors and monitoring their performance.

Sample collection analysis was as indicated previously with the exception that the bi-hourly samples were not composited. That is, each sample was analyzed for suspended solids, BOD_5, TOC, COD, NH_3, NO_2, NO_3, and ortho phosphates. Hence, a complete set of thirty-six data points over the three day period were available for analysis.

DATA ANALYSIS

Data base variables consisted of two types: on-line process data and laboratory data. Process data was recorded automatically by the System/7 on-line every six seconds. At two-minute intervals, data was transferred to the disc storage. On a once-per-day basis this data was recorded on magnetic tape for subsequent analysis. A list of the process variables recorded is given in Table 2.

Laboratory data was entered into the on-site System/7 through the use of the LAB program. This program accepted data via the teletype for any hour of the day within the preceding 15 days. Normally, all laboratory data from a given day was not available for 5 days (due to the 5 day BOD_5 period), and the 15-day period allowed for weekends and other potential delays. Again, data was transferred from the System/7 to magnetic tape for subsequent analysis. Table 3 contains a list of the laboratory data recorded.

A brief description of the data analysis techniques that were utilized to perform the comparative analysis of the performance of control schemes is given on page 45.

Basically, the data analysis consisted of: (1) performance and cost comparison over the full 28-day period utilizing, the averaged and composited daily data, and (2) detailed performance and cost comparison over the three-day intensive period, utilizing bi-hourly process and lab data.

Appendix C contains the data for the manual control period in the form in which it was used for the comparative analysis studies. As illustrated in the Appendix, the data base was used to compute the following:

1. Daily data for each of the 28-days of the particular control phase. This was later utilized to compare the average performance of the schemes during the period. As illustrated,

Table 2. PROCESS DATA

Description	Units
Total plant flow	mgd
Los Altos flow	mgd
Mt. View flow	mgd
pH for total plant flow	pH units
DO #1	mg/liter
DO #2	mg/liter
DO #3	mg/liter
DO #4	mg/liter
Airflow #1	cfm
Airflow #2	cfm
Airflow #3	cfm
Airflow #4	cfm
Thickener #1 flow	gpm
Thickener #1 density	Percent of full scale
Thickener #2 flow	gpm
Thickener #2 density	Percent of full scale
Thickener #3 flow	gpm
Thickener #3 density	Percent of full scale
Thickener #4 flow	gpm
Thickener #4 density	Percent of full scale
RAS flow	mgd
WAS flow	mgd
MLSS	mg/liter
Chlorine flow #1	lb/day
Chlorine flow #2	lb/day
Chlorine flow #3	lb/day
Chlorine residual #1	mg/liter
Chlorine residual #2	mg/liter
Chlorine residual #3	mg/liter
Sulfer dioxide flow	lb/day
Filtered DO (1)	mg/liter
Filtered DO (2)	mg/liter
Filtered MLSS (1)	mg/liter
Filtered MLSS (2)	mg/liter

Table 3. LABORATORY DATA

RAW SEWAGE SS	RAW SEWAGE PH
RAW SEWAGE BOD	PRIMARY EFF PH
RAW SEWAGE TOC	SECONDARY EFF PH
RAW SEWAGE COD	FINAL EFF PH
FINAL EFF SS	MIXED LIQUOR TEMP
FINAL EFF BOD	MIXED LIQUOR SVI
FINAL EFF TOC	MIXED LIQUOR SS
FINAL EFF COD	MIXED LIQUOR VSS
RAW SEWAGE NH3	MIXED LIQUOR DO
RAW SEWAGE NO2	MIXED LIQUOR SET VOL
RAW SEWAGE NO3	RETURN SLUDGE SS
RAW SEWAGE ORTHO PHOS	WASTE SLUDGE SS
PRIMARY EFF SS	SECONDARY EFF TOC
PRIMARY EFF BOD	SECONDARY EFF COD
PRIMARY EFF TOC	SECONDARY EFF NH3
PRIMARY EFF COD	SECONDARY EFF NO2
PRIMARY EFF NH3	SECONDARY EFF NO3
PRIMARY EFF NO2	SECONDARY EFF ORPHOS
PRIMARY EFF NO3	FINAL EFF NH3
PRIMARY EFF ORTHO PHO	FINAL EFF NO2
SECONDARY EFFLUENT SS	FINAL EFF NO3
SECONDARY EFF BOD	FINAL EFF ORTHO PHOS

computed variables will consist of:

a. Typical Process Data - mean, minimum, maximum and standard deviation of the process variables.

b. Daily composite lab data

c. Daily loading of important performance variables

d. Daily efficiency of contaminant removal for each of the four stages of the plant

e. Daily average respiration loading (lbs. loading/1000 $ft.^3$ of aeration tankage)

2. Monthly data for the 28-day period of each phase. This was later utilized to compare the long-term performance of each control strategy. Specific variables to be computed included;

   a. Process data for the period - mean, minimum, maximum and standard deviation of each variable. This was later used to compute, for example, the average DO level attained for the month.

   b. Loading data summary

   c. Plant air consumption (allows cost comparison associated with DO control)

   d. Monthly efficiency (for comparison of contaminant reduction levels)

   e. Respiration summary.

SECTION VII

HARDWARE AND SOFTWARE IMPLEMENTATION

The implementation of the instrumentation and computer systems were paramount to the successful completion of this project. This included hardware installation, calibration and checkout, and software integration. This section discusses these aspects of the instrumentation and computer system. Table 4 summarizes costs and maintenance data on the instrumentation, while Table 5 and 6 summarize similar information on the computer system.

INSTRUMENTATION

The DO system at Palo Alto consists of four Weston & Stack "Model A40" probes and four "Model 3000-1A" DO analyzers. These probes were originally installed as part of the original plant construction.

All the DO probes were cleaned, checked and calibrated initially (DO-Probe membranes must be periodically cleaned since they tend to clog, resulting in lower readings and poor sensitivity). Cleaning operations were performed once every two weeks, usually taking about one hour to clean and check all probes. Approximately once every three months, all probes were checked, cleaned, and recalibrated. This normally required about four hours for all probes.

The output of the DO analyzers is a 4-20ma. signal. This signal proved to be very noisy (electrically), probably resulting from the small oscillatory variations of the rotor of the DO probe. A first order filter was employed in the computer to "smooth" out the signal. Additional filtering was provided by a polynomial filter in the DO controller.

The DO controller, as implemented, used only one DO probe. The original cost of a single DO system as above was about $1500. Since these were originally installed as part of plant construction, there was no additional cost to this project. (See Table 4).

Suspended Solids Meter

The MLSS suspended solids meter originally purchased for this project was the Keene "Model 8200 SCCS". Installation of the probe was straightforward using simple pipe mounts. Shortly after installation, the instrument failed. The problem was traced to a leak in the probe seal. The probe was then disassembled, dried out and then reassembled.

The probe was reinstalled but failed to lend itself to a stable calibration. A Keene factory engineer checked the Keene meter. The probe assembly was replaced, the instrument was recalibrated, and it since has been working quite well (Figure 14).

Table 4. INSTRUMENT COSTS

Instrument	Cost $	Installation[a] $	Installation[a] MH	Utilities[b] $	Monthly Supplies $	Maintenance[a] $	Maintenance[a] MH
DO Probe	1,500	600	40	nil	5	45	3
MLSS Meter							
Keene	3,500	240	16	nil	0	15	1
Biospherics	2,400	120	8	nil	0	15	1
Respirometer	5,200	600	40	33[c]	5	15	1
TOC Analyzer	10,450	600	40	16	5	480	32

[a]Assuming $15/man-hour ($15/MH)

[b]Assuming water at 20¢ per 1,000 gallons and electricity at 1¢ per KWH

[c]Respirometer uses up to 200 gallons of water per hour.

A Biospherics "Model 52L" suspended solids meter was next installed, and the data correlated quite well with the laboratory results (Figure 14). It was used for the MLSS test. It did fail once, necessitating a replacement capacitor in the control unit.

Both instruments track diurnal variations quite well. During the Air/RAS testing, the Keene instrument was biased higher than the Biospherics. After a bias adjustment, the Biospherics read higher, but this has since been more carefully "zeroed out".

Both instruments have been otherwise maintenance-free. The Keene has the advantage of a direct digital readout in PPM, and no moving parts. The Biospherics unit is self-cleaning (not a problem here); hence, it has some moving parts. Eventually this will require replacement of an "O" ring. While the Biospherics unit has a meter readout, it has two scales (0-3000 PPM and 0-10,000 PPM), and the Keene unit covered a range of 500-5000 PPM digitally. The Biospherics thus can also be used to measure return activated sludge concentrations if desired.

The original Keene suspended solids meter was purchased for $3,500. The total installation time was about two man-days (including running of cable). The Biospherics unit has a purchase price of $2,400. Its installation took about one man-day (see Table 4). Both meters were installed in aerator number one, adjacent to each other.

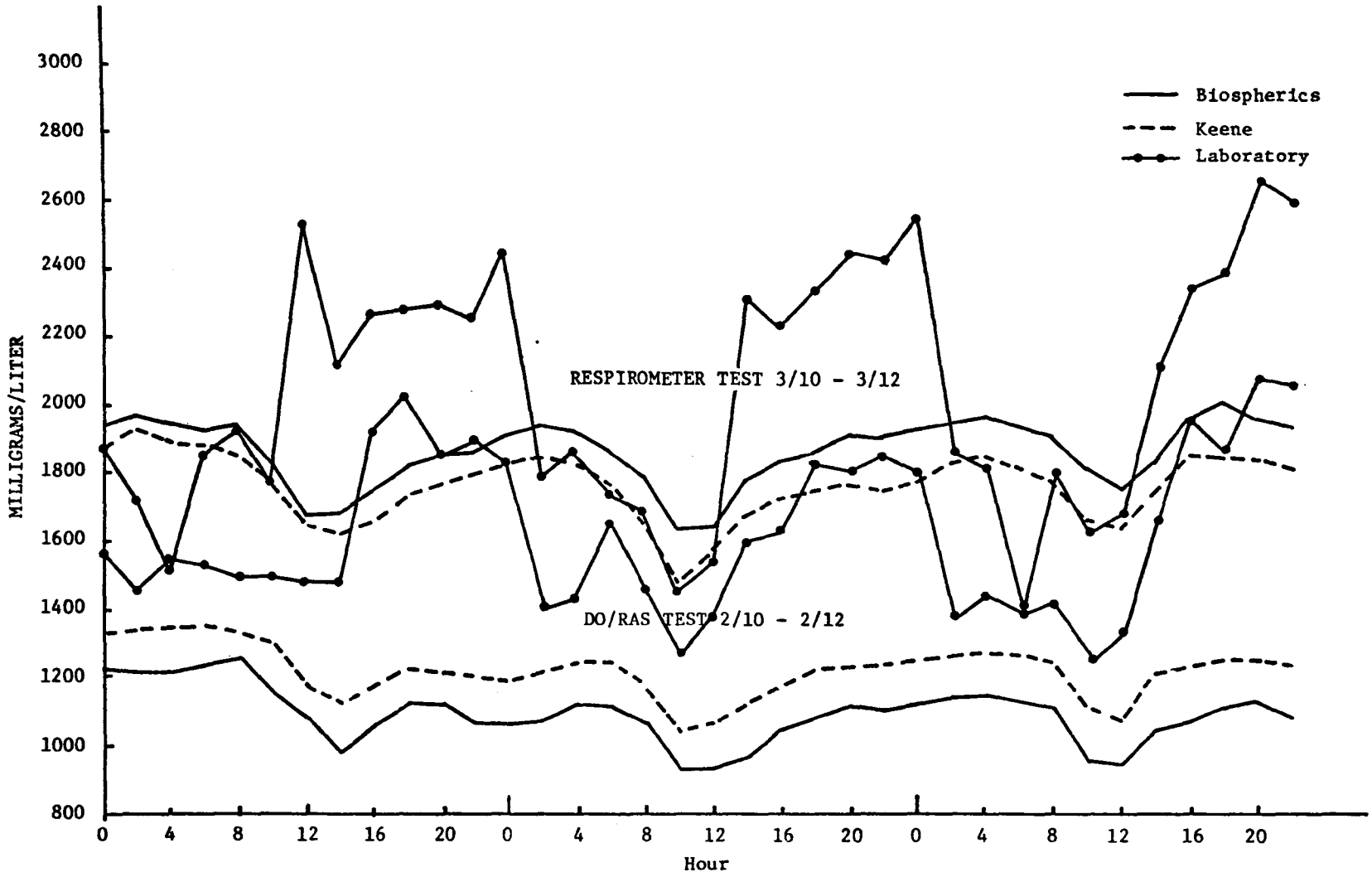

FIGURE 14. SUSPENDED SOLIDS METER COMPARISONS

Respirometer

The respirometer that was used was a Badger "Model OD 2000". Initial installation of the instrument took about five man-days, due to some necessary plumbing work (shown schematically in Figure 15). The instrument needed sample, water, and drain connections.

Initially, the instrument was plagued with an electronic problem that resulted in erratic output signals. Once this was corrected, the instrument proved very successful. One additional problem that was encountered was a failure of the sample pump. This was repaired by plant personnel within one hour; since then, the instrument has been very reliable. Figure 16 shows the signal output from the respirometer.

The original purchase price of the respirometer was $5,200. In addition, a supply of soda lime is needed to absorb carbon dioxide in the system. The soda lime requires replacement once every two weeks based on a respiration cycle of one four-liter sample every hour (Table 4).

TOC Analyzer

The TOC analyzer provided for this project was an Astro-Ecology "Model 1000". The installation of this instrument took about one week and required connections for sample, water, plant air and a drain. (see Figure 17).

The TOC analyzer initially suffered from considerable calibration drift (20-30%/week) requiring frequent recalibration. Several times within a three-week period, the reaction-chamber output-line plugged. At the end of this time, the infrared (IR) analyzer gave unstable readings.

The IR analyzer was cleaned and checked out, then (with the cooperation of Astro Ecology representatives, Palo Alto instrument engineers, and the U.S. Environmental Protection Agency) the analyzer was modified. The drain connection was relocated and a new filter was installed prior to the IR inlet.

Performance of the analyzer improved with approximately 10-20% drift/week. To maintain this degree of stability, daily cleaning (water rinse) was necessary.

Unfortunately, because of cumulative delays in making the TOC analyzer operational, it became necessary to delete the TOC feedforward, control-loop evaluation.

The purchase price of the TOC analyzer was $10,450. See Table 4 for a summary of these costs.

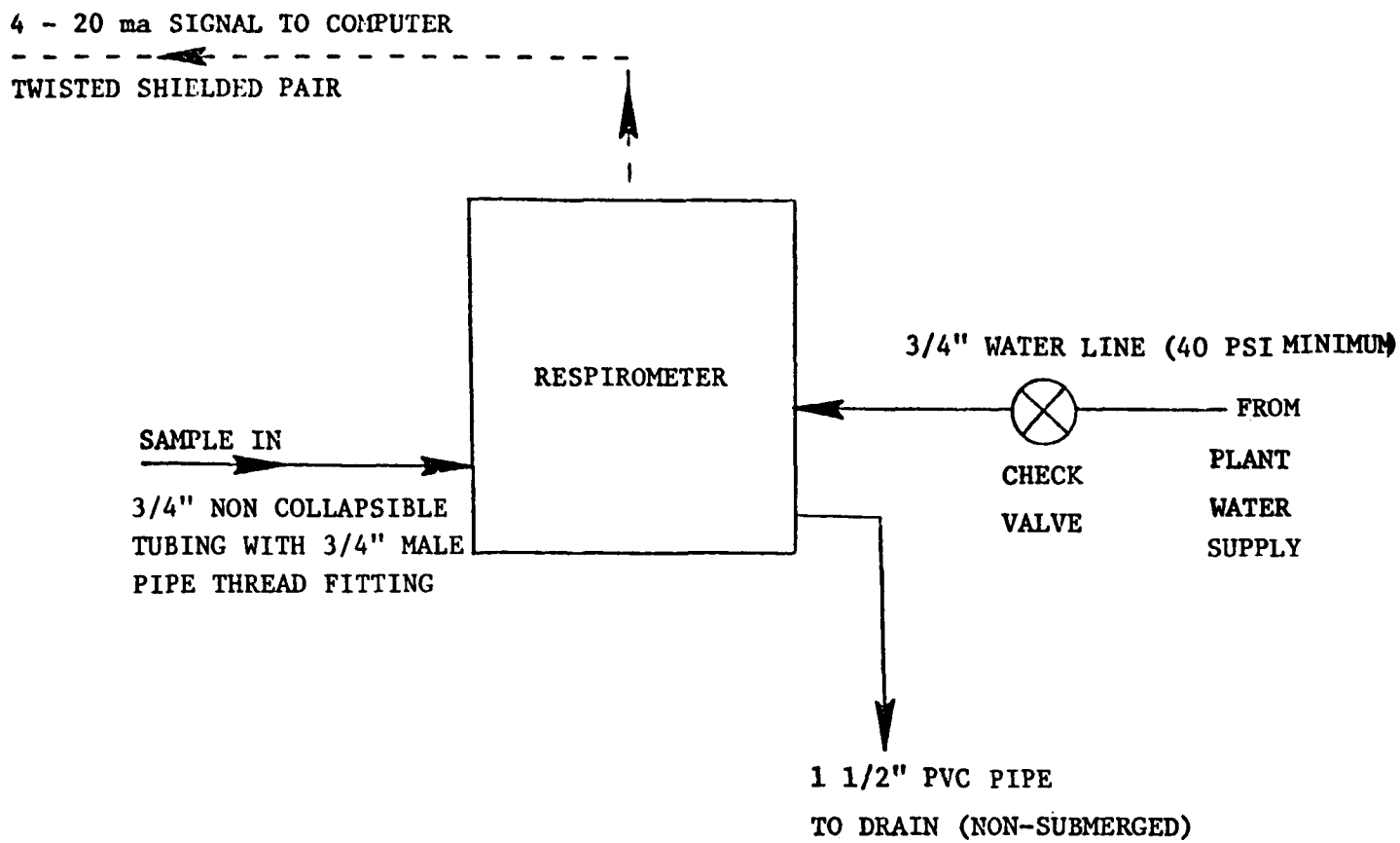

FIGURE 15. RESPIROMETER SCHEMATIC DIAGRAM

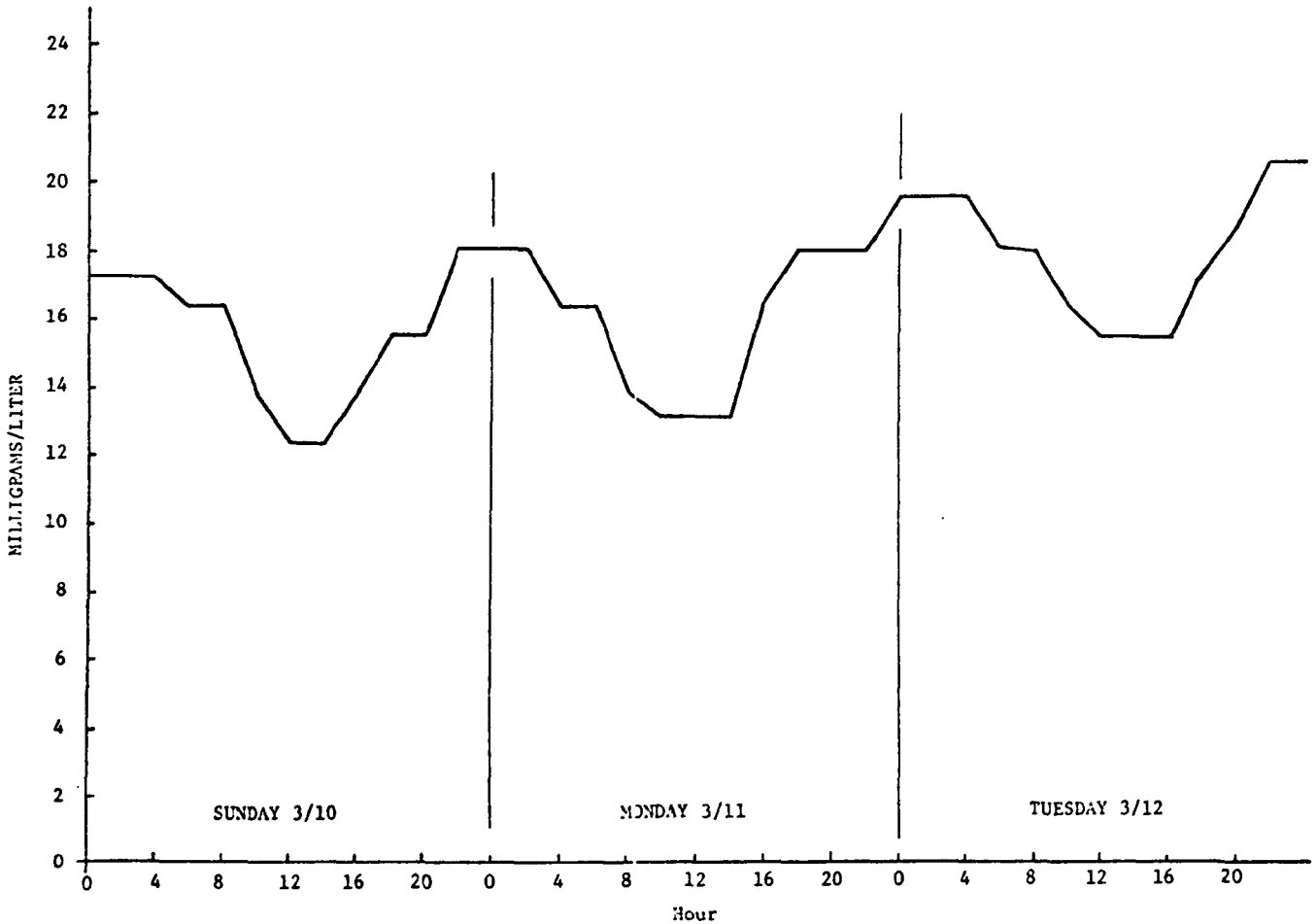

FIGURE 16. BADGER RESPIROMETER PERFORMANCE IN mg/LITER/45 MINUTES

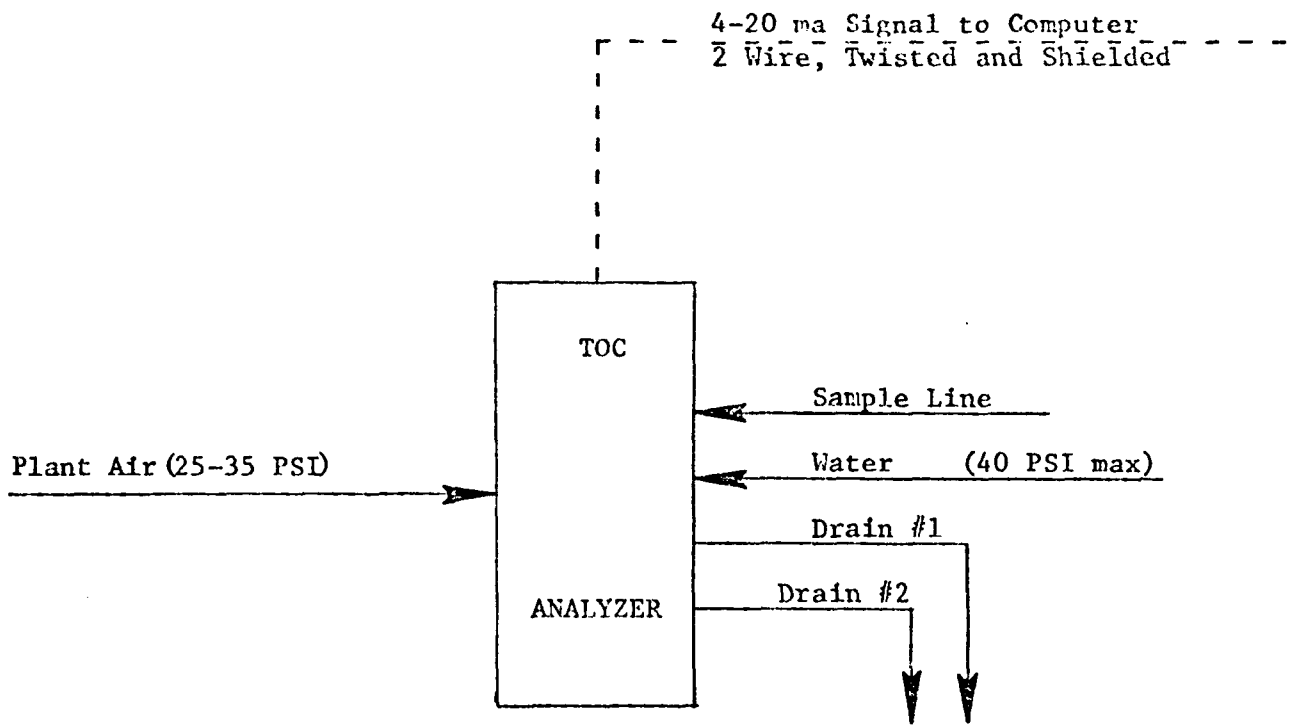

FIGURE 17. SCHEMATIC DIAGRAM TOC ANALYZER INSTALLATION

COMPUTER SYSTEM

The computer system at Palo Alto was an IBM System/7, with 16K words of main storage and 2.5 million words of moving head disk storage. Additional equipment included a teletype for input and output, a magnetic tape drive, and a keypunch/card reader. The process I/O included 32 analog inputs, 80 digital inputs, and 32 digital outputs. (See Figure 18).

The installation of the computer hardware was performed by IBM personnel. The City of Palo Alto had to provide the appropriate electrical power (220 volts AC at 4.6 KVA) and the proper type of IBM connector. In addition, a solid ground connection was required, which was also used by the plant instrumentation. Upon completion of these tasks, the computer system was operative.

To complete the computer installation, both process measurements (analog), and equipment/alarm status (digital) had to be wired into the computer. This was done by parallel connection from panel instrumentation (existing) to screw terminals in the computer. The total effort of City personnel to perform these tasks was one man-month.

The system software was based around the Application Module Library (AML/7), which is a standard IBM product. This software routinely takes care of scanning, alarming, engineering units conversion, and scheduling of control and data-management programs on any one of eight clock frequencies. In this case, 6 seconds, 30 seconds, 1 minute, 2 minutes, 30 minutes, 1 hour, 8 hours, and 24 hours. The basic scanning and alarming takes place on a six-second cycle.

One additional key program that was provided by IBM, on a custom basis, was the PAX monitor. This program takes care of multiple partition core allocations and queuing of programs from disk for these core partitions, both from program-program requests and from keyboard requests. Thus, the Palo Alto system has a type of foreground/background processing capability allowing data management and other types of programs to be executed concurrently with scan-and-control functions. The development of this program and an on-line card read program allowed essentially continuous computer operation.

With the availability of the PAX program, it was possible to begin testing control strategies on-line. All of the control programs were written in assembly language (MSP/7 and AML/7). All program assembly/compilation for this project was performed via a telecommunications link to an IBM 370 in San Francisco.

Process data were routinely written into disk storage every two minutes. The disk unit allowed storage of up to eight days worth of data. Once a week, this data was transferred to magnetic tape for later off-line

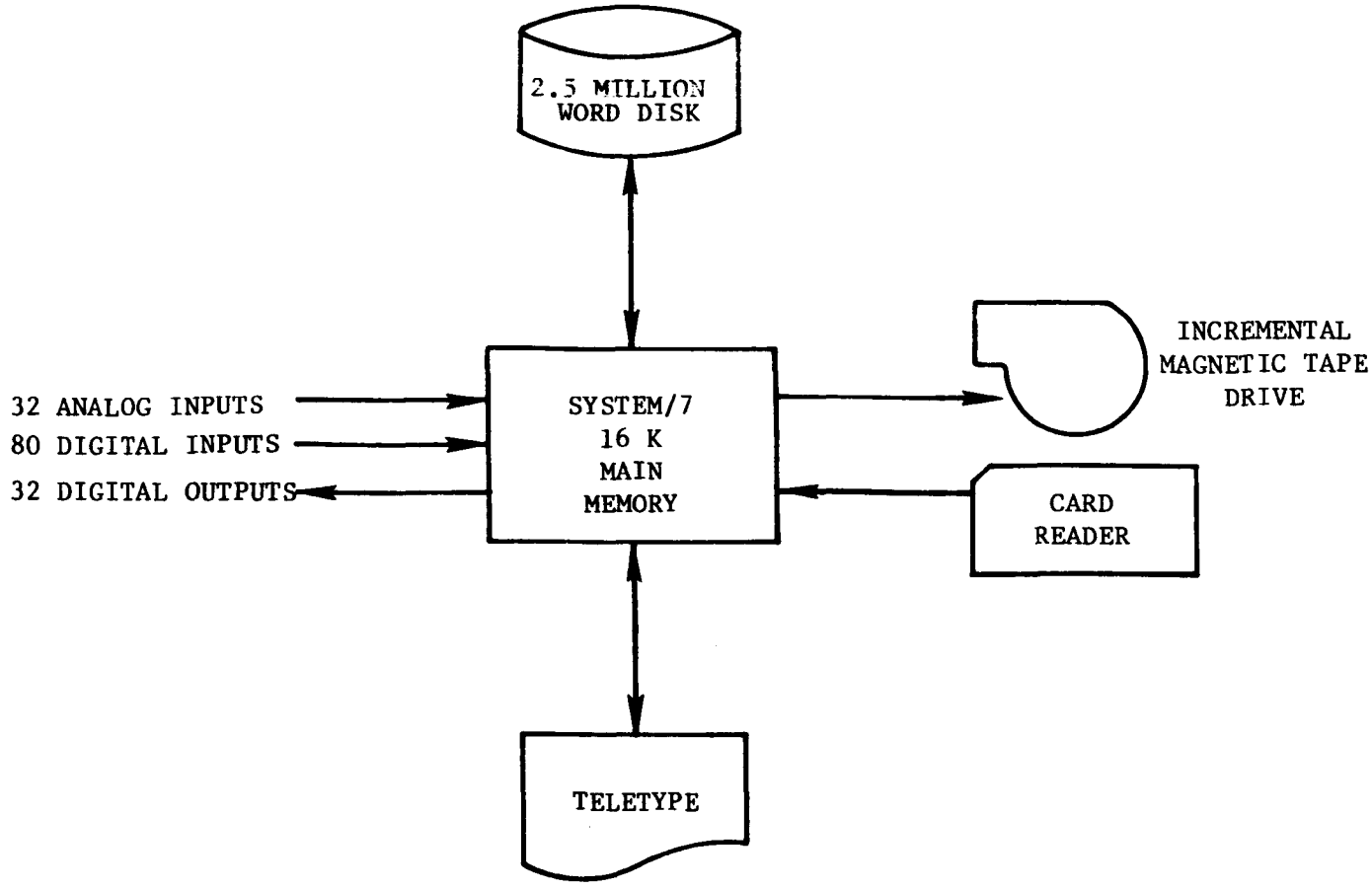

FIGURE 18. COMPUTER CONFIGURATION

analysis. This disk data base was fundamental to the various data management reports. These included:

- Hourly Log
- Shift Report
- Daily Report
- Laboratory Data Entry.

Off-line analysis of the process and laboratory-taped data was performed on an IBM/370, with all analysis programs written in FORTRAN IV. A summary and brief description of all programs provided is shown in Table 5.

Computer system failures usually were of two types: fatal and non-fatal. A fatal failure would either completely stop the system or prevent writing of data to disk; problems of this type included disk failure, memory failure, or teletype failure. Non-fatal problems only required downtime to correct the problem; they did not interfere with normal data collection and control. Examples of this type of failure were analog input, digital input, process interrupt, and magnetic tape failures. Table 6 shows a summary of the computer system failures that occurred during this study.

The most pronounced failure that was observed was that of the disk system. Periodically, it would "stall" and fail to record process data. This condition was not obvious to plant personnel and often would go undetected for several hours. The problem was apparently due to some marginal voltages within the computer, and has been rectified.

Another problem that still has eluded repair was that of the magnetic tape system. It occasionally writes data incorrectly, and this malfunction is usually not discovered until the tape is processed by the off-line analysis programs. This usually resulted in a loss of either process or laboratory data. Not all of these incidents have been recorded.

The purchasing costs of computer hardware of the size and capability described above would range from $60,000 to $140,000. To that, add contract maintenance which would be in the range of $100-$500 per month. A possible alternative to contract maintenance is on-call maintenance which would be between $15-30 per hour, plus expenses and parts. If leasing arrangements are available, they would run between $1400-$4000 per month and would normally include all maintenance and spare parts. Table 7 shows a summary of computer costs.

Table 5. PALO ALTO COMPUTER PROGRAMS

AUTOMATIC PROGRAMS

1. SCAN - performs all scanning and conversion to engineering units on a 6-second cycle. This program resides in core at all times and uses data from the SCAN table (i.e., table driven).

2. LIMIT CHECK & ALARM - performs limit checking and alarming on high or low limit conditions. This program also uses data in the SCAN table.

3. DISK WRITE - writes all process data to disk every two minutes. This data is later retrieved by the magnetic tape program or the report programs.

4. LOG - prints a log of all process variables that are enabled on the teletype every one hour. This frequency is changeable, but for convenience has been set to one hour.

5. SCAN UPDATE - enables all analog points at midnight every night. This is to insure continuation of scanning for points that may have been disabled during the day.

6. 8/24 HOUR REPORT - prints a summary report of process variables every 8/24 hours. This is the same program as REPORT, but with default values.

7. MONITOR - performs scheduling of programs from disk, in response to either keyboard requests or program requests.

8. DO CONTROL (CØØ1) - the DO controller runs on a one minute cycle and as implemented uses proportional plus integral action. A four-point polynomial filter is included which also calculates the first derivative.

9. MLSS CONTROL - (CØØ4) - the MLSS control is essentially the same as the DO control except it runs on a 30-minute cycle, and presently uses only proportional action.

10. DO/RAS CONTROL (CØØ5) - this program runs on a 30-minute cycle and calculates the necessary change in the return activated sludge rate.

11. RESPIROMETER CONTROL (CØØ5) - this program runs on a 30-minute cycle, and using the respirometer reading, calculates the necessary change in the RAS rate.

ON DEMAND PROGRAMS

1. KEYBOARD UTILITY - is a collection of short programs to get/put data into the SCAN tables, enable points, change setpoints, and dump/patch core.

2. CARD READ - reads object cards (programs produced by the host computer) into pre-assigned areas on desk. Once the program is on disk, it can be catalogued using the DIRECTOR program.

3. DIRECTOR - establishes a name/number correspondence between programs and disk area. Once the program is catalogued, it can be executed either by keyboard request or program request.

4. MAGNETIC TAPE WRITE - writes process and laboratory to magnetic tape. In both cases an entire day's worth of data is written each time a write request is given.

5. DISKLIST - writes data from disk to the teletype. The operator specifies the time and points of interest, and then an hour's worth of data is written.

6. LAB - reads and writes data from the teletype to the disk laboratory files. Lab data is entered for a particular day and hour (hour 23 being composite data).

7. AIR - prints out on the teletype the value of each air blowing rate and each DO meter in the secondary aerators.

8. SOLIDS - is an offline program that uses keyboard entered data to calculate centrifuge performance. This program is used primarily for polymer evaluations.

9. CALCULATOR - is an algebraic type of calculation program. Expressions are equated; then, any combination of add, subtract, multiply, and divide calculation can be performed on these variable and printed out.

Table 6. COMPUTER SYSTEM FAILURES

Date	Description	Fatal	Repair Time (hours)	Data Loss (hours)
11/13/72	Memory Parity	No	1.5	
10/27/72	TTY Motor Relay	Yes	1.6	5
12/ 5/72	Analog Input	No	1.25	
2/21/73	Digital Input	No	3.5	
3/ 9/73	Disk	Yes	2	4
3/19/73	Disk	Yes	3	2
3/21/73	Magnetic Tape	No	1.75	
5/26/73	Disk	Yes	1.0	3
6/ 6/73	Disk	Yes	1.5	6
6/ 8/73	Process Interrupt	No	1.3	
7/20/73	Digital Input	No	2.0	
8/ 5/73	Disk	Yes	0.5	13
8/13/73	Magnetic Tape	No	1.75	
8/16/73	Magnetic Tape	No	1.40	
8/28/73	Memory Parity	Yes	4.0	3
8/29/73	TTY Motor	Yes	1.5	4
10/24/73	Disk	Yes	0.5	3
10/24/73	Analog Input	No	1.75	
1/11/74	Disk	Yes	0.5	4
1/21/74	Disk	Yes	0.5	2

TABLE 7

TYPICAL COMPUTER COSTS*

PURCHASE		
Computer Cost	$60,000-$140,000	(one time)
Maintenance	$100-$500/mo.	$1200-$6000/yr.
LEASE		
Computer	$1400-$4000/mo.	$17,000-$48,000/yr.
OTHER		
Utilities (3-6KVA) @ 1¢/KWH	$22-$44/mo.	$260-$520/yr.
Supplies (paper,cards)	$15-$25/mo.	$180-$300/yr.

*These costs are for a system of the configuration shown in Figure 4.6. This DOES NOT necessarily represent the ideal or lowest cost configuration necessary to accomplish these functions.

SECTION VIII

PERFORMANCE OF AUTOMATED STRATEGIES

In analyzing the data from the various control-alogrithm tests, two evaluation criteria must be considered. The first criteria is an assessment of whether or not the controller functioned as it was intended. The algorithms developed here are all basically regulators for maintaining constant levels of DO, MLSS, or F/M. Thus, time-history examination of the controlled variable in comparison to a manual test, reveals the quality of regulation.

Second, and most important, the impact of the controller on plant operation must be determined. The two major areas of demonstrable benefits are:

- Effluent Quality Improvement
- Operating Cost Savings.

Comparisons are made between plant-performance indices developed from data gathered both manually and automatically in order to quantitatively measure benefits derived from automatic control.

Comparative data for the controller evaluations was developed in two manual-test periods. The first, Manual Test I, was performed in the dry season (April thru October) when the plant was operating in the contact stabilization mode. This period is used as a reference for the DO and MLSS controllers which were also tested in the dry season and with the plant operated in the contact stabilization configuration. Manual Test II, in the wet season (November thru March) and with the plant in the conventional secondary treatment configuration, is used to compare operation with the Air/RAS and Respirometer/RAS controllers. Summaries of all the test-period averages for important operational parameters are given in Table 8.

DO CONTROLLER

The intent of the DO controller was to adjust the air flow to the aerators in the secondary treatment process in response to changes in biological respiration demands. The mechanism of control was to maintain the DO concentration in the secondary aerators at a constant value.

Figure 19 shows the time-history results of the DO controller for the three-day intensive test period. DO was maintained very close to the 1.0-mg/l setpoint most of the time despite very large changes in the air requirements. Comparison of Figure 19 with Figure 20 (data for manual test I) shows the wide excursions in DO that resulted from the standard (i.e., manual) procedure of twice daily scheduled, air-blowing-rate

Table 8. AVERAGES FOR OPERATING VARIABLES FOR A 30-DAY TEST PERIOD

Test	Plant Flow, mgd	Plant Loading, lb BOD_5/day	Return Activated Sludge, mgd	Mean Cell Residence Time, Days	Average Dissolved Oxygen, mg/L	Test Period, Days	Season	Operating Configuration
MANUAL I 7/9/73 to 8/7/74	24.0	31,750	8.9	10	1.29	30	Dry	Contact Stabilization
DO 9/16/73 to 9/11/73	23.6	38,100	8.7	10	1.04	31	Dry	Contact Stabilization
MLSS 9/16/73 to 10/16/73	26.0	33,700	11.0	10	1.26	31	Dry	Contact Stabilization
MANUAL II 10/28/73 to 11/27/73	29.0	42,300	12.6	10	1.02	31	Wet	Conventional
AIR/RAS 1/13/74 to 2/12/74	26.7	39,500	11.5	10	0.78	31	Wet	Conventional
RESPIROMETER/RAS 2/13/74 to 3/12/74	24.7	31,700	12.8	9	0.86	28	Wet	Conventional

changes. The superiority of automatic control for regulating to a DO desired setpoint is thus demonstrated.

It should be pointed out that in the process of following the computer's DO-controller commands, the operators became adept at anticipating the air-flow requirements themselves by observing the DO strip chart on the control panel. Figure 21 shows the Manual Test II intensive results, and indicate a considerable reduction in DO deviation over Manual Test I. The operators in effect employed analog man in the loop DO control during Manual Test II. The operator can therefore perform the control task himself with proper training and experience; however, the frequent adjustments in control settings (on the order of once every two minutes during periods of rapid variations in respiration) are very wasteful of an operator's time, as well as being very monotonous. Automatic control, when compared to nearly continuous manual monitoring, is far less costly and produces better results since the machine will not lose interest in a dull task.

Benefits

The prime benefit expected of the DO controller was power cost savings due to reduced average-air-supply requirements. Air use is minimized by maintaining the DO at the lowest level consistent with good effluent quality. The operating point of 1.0 mg/l DO for the test period was selected after consultation with Palo Alto operating personnel. No exploration to determine the absolute minimum DO level was undertaken.

Table 9 shows the removal efficiencies, broken down by unit process, for both the DO and Manual I tests. Of primary interest are the secondary process results since that is where the major impact of the DO controller should be. Direct comparison of the mean of the secondary process removal efficiency must be tempered by statistical considerations, however, the standard error of the mean estimates, σ_m, given in Table 9 is:

$$\sigma_m = \frac{\sigma}{\sqrt{n}} \tag{21}$$

where n is the number of days for which the mean efficiency is calculated and σ the standard deviation of its removal efficiencies.

At the 95% confidence level, for the differences between mean removal efficiencies, only the secondary TOC removal efficiencies show statistically significant differences, of approximately 13% better than for the manual period when compared to automatic DO control. Since the other removal efficienceis -- BOD_5, COD and SS -- are all higher for the DO controller, however, one might conclude that there is a definite improvement in net efficiency for secondary treatment with the DO controller.

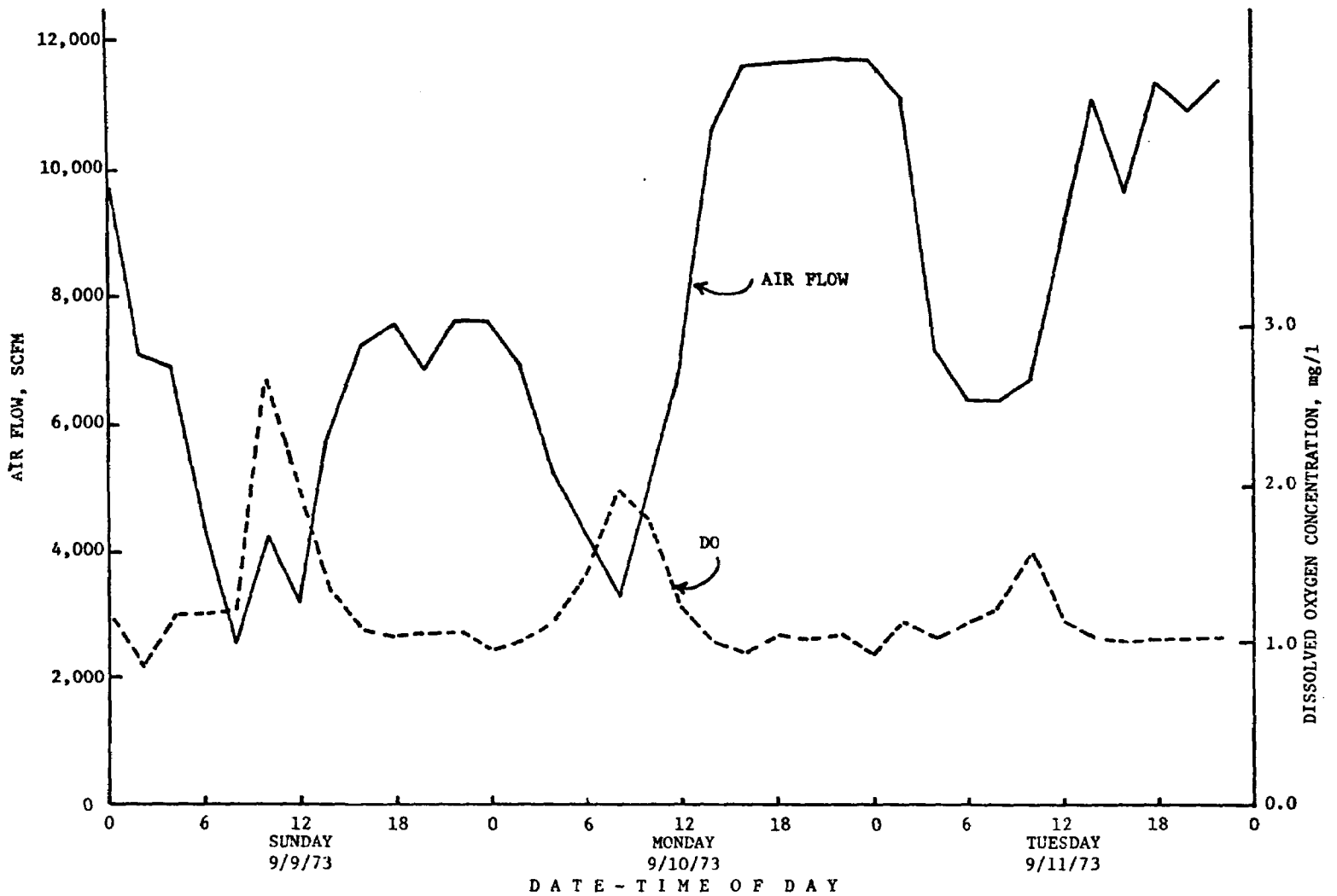

FIGURE 19. DO CONTROLLER: DISSOLVED OXYGEN AND AIR FLOW VS. TIME

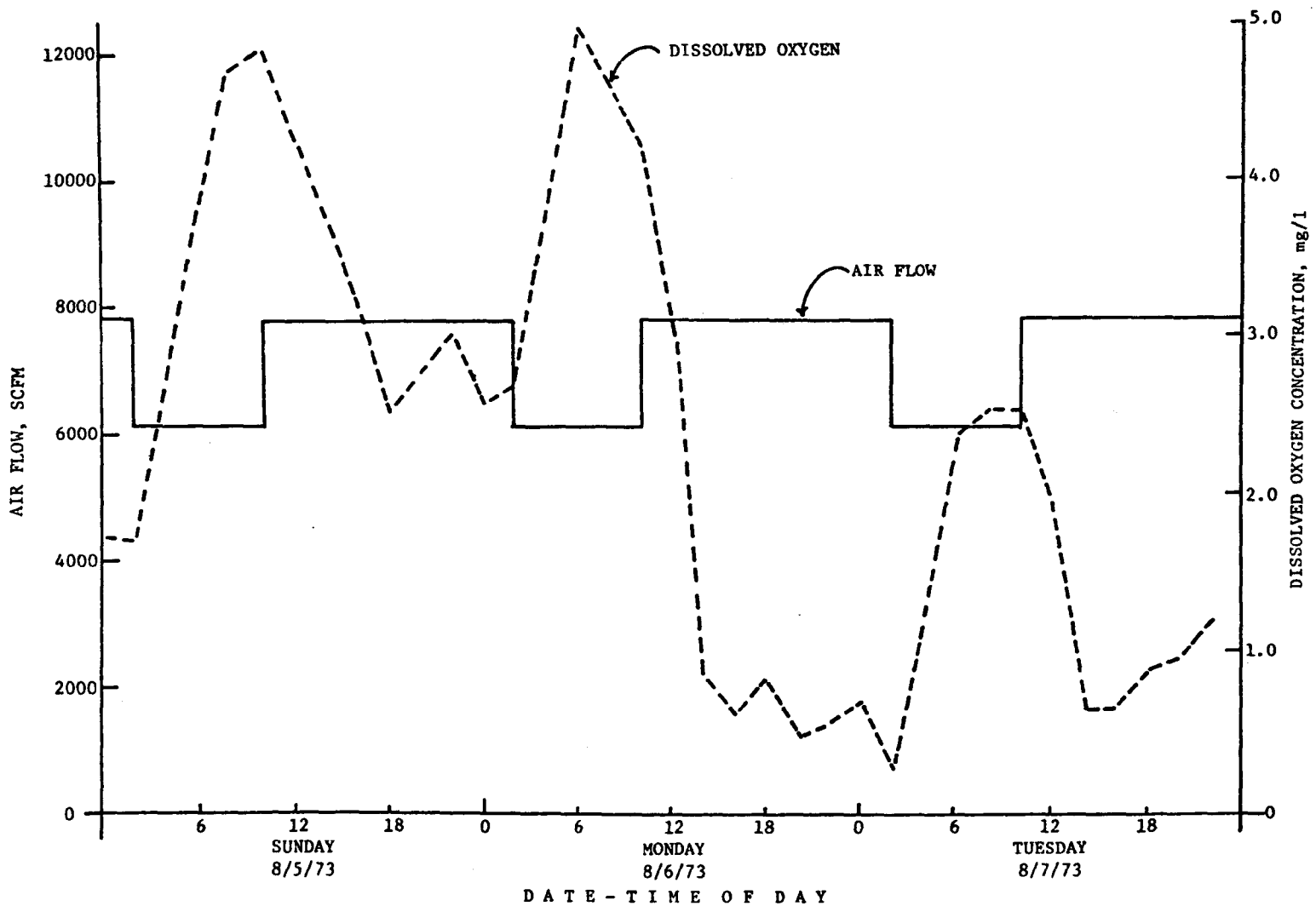

FIGURE 20. MANUAL TEST I. DISSOLVED OXYGEN AND AIR FLOW VS. TIME

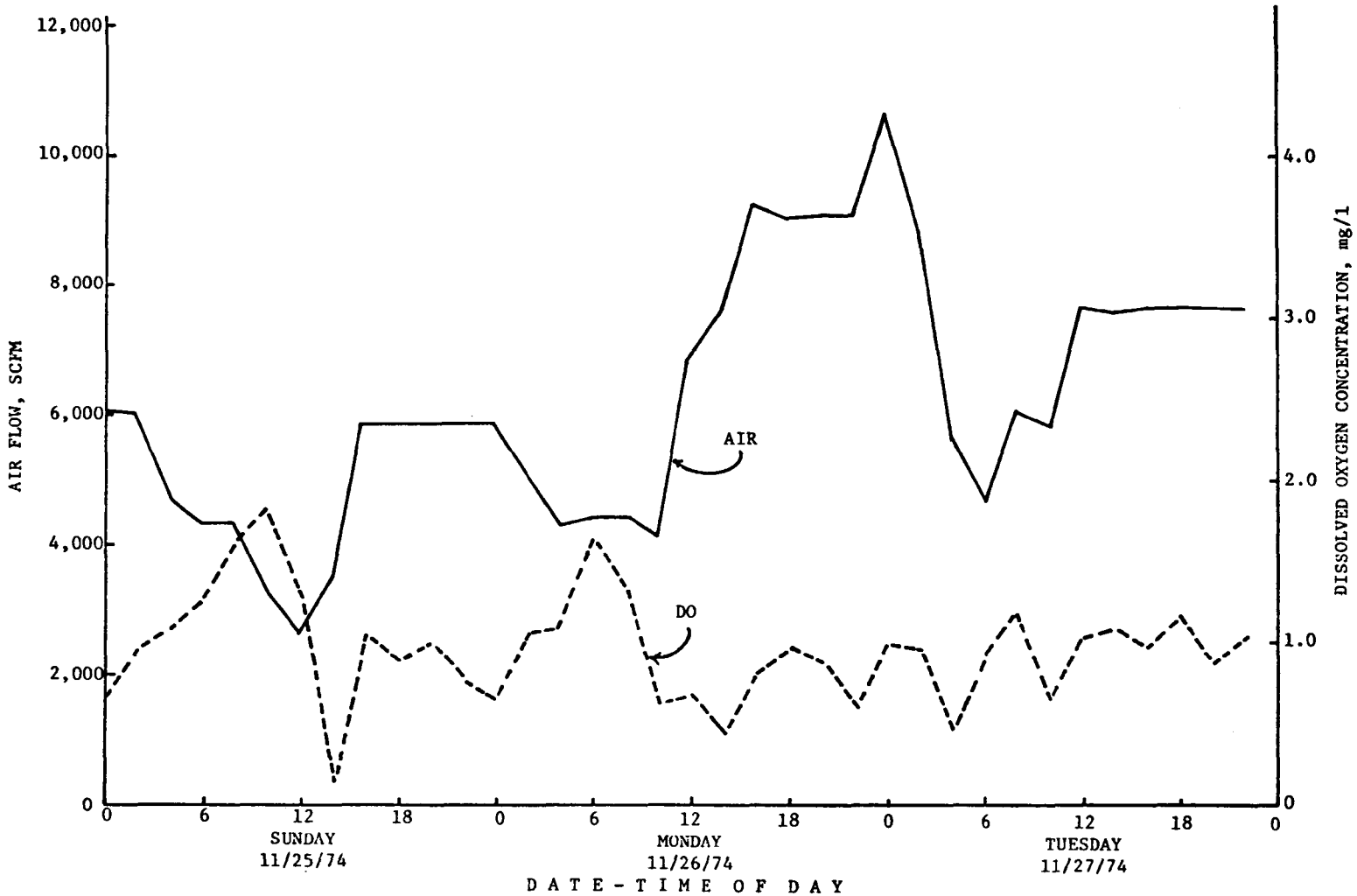

FIGURE 21. MANUAL TEST II: DISSOLVED OXYGEN AND AIR FLOW VS. TIME

If the four measures of waste removal efficiency - SS, BOD_5, TOC and COD - are themselves averaged, the net improvement with automatic DO control is 7% relative to Manual Test I.

Figure 22 and 23 are log-normal probability plots of secondary effluent BOD_5 and SS concentrations. The DO controller results reveal a very small mean increase in effluent BOD_5 over the manual results. There is also slightly more dispersion in the BOD_5 for DO control. For suspended solids, the DO controller produced a significant improvement in the mean (30 mg/l, as opposed to 40 mg/l for the manual test) with practically the same dispersion.

Since Table 8 indicates that the conditions of the DO and Manual I tests were very nearly identical except for plant loadings one might conclude that there was a measurable improvement in secondary treatment effluent quality. Given the tighter control of closing the loop and some search for the optimum DO level, it is probable that effluent quality could be further improved.

Table 10 lists the results of the primary areas for significant operating cost savings for all control periods. Only air-compressor power costs are really applicable to the DO controller since the RAS pumping rate was constant and also nearly the same as for the Manual I test. Air use is normalized by secondary treatment BOD_5 loading. Reasonable estimates of yearly average BOD_5 loading and plant flows are employed to find total material and power consumption. The power costs for air supply are developed below.

No separate direct measure of power use was available on the Palo Alto plant's motor drives for air. A reasonable estimate of the cost of providing air can, however, be determined knowing peak capacities, Q_{max}, and motor power ratings, P_{max}. Then, with the following assumptions:

- Motor efficiencies, η, are about 90%
- A linear relationship exists between compressor or pump output and power consumption
- Power costs, p_e, at Palo Alto are about 1¢/KWH.

The power cost per unit output, p, can be expressed

$$p = \frac{p_e \, P_{max}}{\eta \, Q_{max}}. \qquad (22)$$

Relevant numerical values for the air power cost per unit output are presented in Table 10.

Table 9. REMOVAL EFFICIENCIES OVER A 30-DAY PERIOD

A. Modified Contact Stabilization

Test	Unit	Mean efficiency, %				Days of data	Std deviation of removal efficiency / Standard error of mean, %				Equipment in service
		SS	BOD_5	TOC	COD		SS	BOD_5	TOC	COD	
MANUAL I	Primary	51.4	22.9	26.1	33.6	30	11.6 2.1	12.0 2.2	12.7 2.3	10.9 2.0	4 Primary Clarifiers
	Secondary	46.3	83.9	53.0	63.1		22.4 4.1	4.5 0.8	7.6 1.4	9.0 1.6	3 Aerators 3 Secondary Clarifiers
	Plant Total	77.4	87.4	66.1	75.1		6.3 1.2	3.2 0.6	7.0 1.3	4.9 0.9	1 Sludge Storage & Reaeration Basin
DO	Primary	47.7	25.8	20.0	32.5	31	12.3 2.2	19.8 3.6	7.9 1.4	11.4 2.0	4 Primary Clarifiers
	Secondary	52.8	84.2	59.8	63.6		22.3 4.0	7.5 1.3	8.4 1.5	10.3 1.8	3 Aerators 3 Secondary Clarifiers
	Plant Total	78.1	84.6	66.7	74.6		8.0 1.4	5.8 1.0	7.3 1.3	5.2 0.9	1 Sludge Storage & Reaeration Basin
MLSS	Primary	47.7	25.3	22.4	35.6	31	11.0 2.0	22.4 4.0	10.7 1.9	16.1 3.0	4 Primary Clarifiers
	Secondary	38.3	83.9	50.5	58.4		26.3 4.7	7.5 1.3	13.3 2.4	13.4 2.4	3 Aerators 3 Secondary Clarifiers
	Plant Total	75.4	84.4	62.4	72.9		6.3 1.1	9.5 1.7	8.6 1.5	6.9 1.2	1 Sludge Storage & Reaeration Basin

Table 9. (continued) REMOVAL EFFICIENCIES OVER A 30-DAY PERIOD

B. Completely Mixed Aeration

Test	Unit	Mean efficiency, %				Days of data	Efficiency variance, %				Equipment in service
							Standard error of mean, %				
		SS	BOD_5	TOC	COD		SS	BOD_5	TOC	COD	
MANUAL II (analog man in the loop DO control)	Primary	45.4	9.1	20.4	27.6	30	19.0 3.5	11.5 2.1	17.8 3.2	14.4 2.6	3 Primary Clarifiers
	Secondary	58.6	84.2	67.7	64.4		27.7 5.1	11.0 2.0	12.6 2.3	13.7 2.5	4 Aerators
	Plant Total	79.8	81.5	71.6	76.9		13.5 2.5	11.7 2.1	9.1 1.7	6.6 1.2	4 Secondary Clarifiers
AIR/RAS	Primary	54.5	20.0	34.8	35.4	30	10.1 1.8	14.3 2.6	12.3 2.2	9.6 1.7	2 Primary Clarifiers
	Secondary	49.5	83.4	59.2	54.6		25.1 4.6	5.8 1.0	12.4 2.3	13.2 2.4	4 Aerators
	Plant Total	79.6	87.6	71.3	75.2		9.4 1.7	6.0 1.1	7.3 1.3	7.9 1.4	4 Secondary Clarifiers
RESPIROMETER/RAS	Primary	52.6	32.4	38.9	37.9	26	20.1 3.9	16.6 3.3	16.4 3.2	16.0 3.1	3 Primary Clarifiers
	Secondary	63.5	84.2	63.5	65.2		19.7 3.9	7.7 1.5	15.8 3.1	11.0 3.3	4 Aerators
	Plant Total	83.8	91.9	75.3	79.1		6.2 1.2	4.2 0.8	8.5 1.7	5.8 1.1	4 Secondary Clarifiers

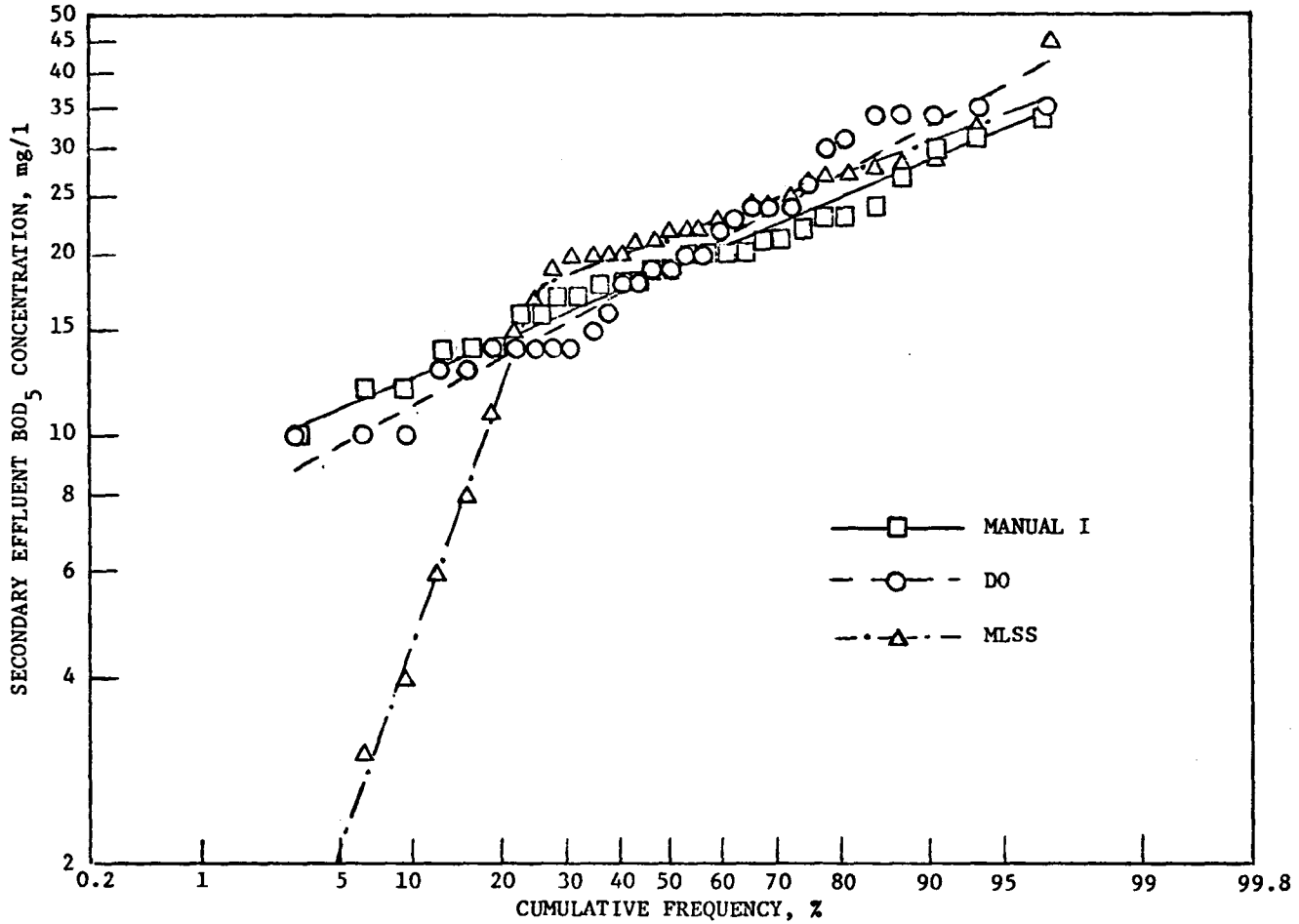

FIGURE 22. DRY SEASON TESTS: SECONDARY EFFLUENT BOD_5 CONCENTRATION VS. LOG NORMAL FREQUENCY DISTRIBUTION

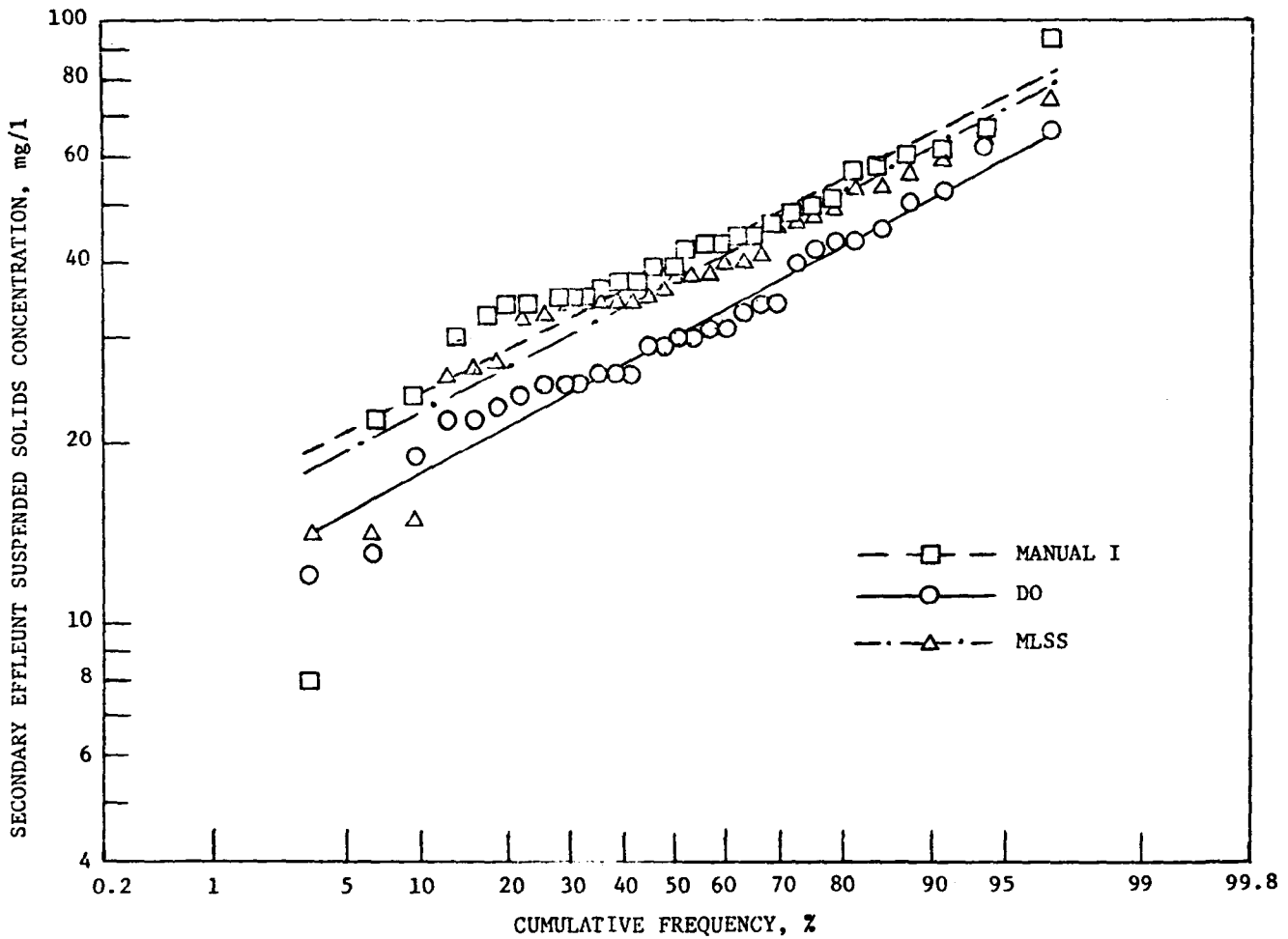

FIGURE 23. DRY SEASON TESTS: SECONDARY EFFLUENT SUSPENDED SOLIDS CONCENTRATION VS. LOG NORMAL FREQUENCY DISTRIBUTION

Table 10. TEST PERIODS' OPERATING COST COMPARISONS

Yearly Costs Based on These Yearly Averages:
Aerator BOD_5 Load = 35,000 lb/day
Plant Flow = 26 MGD

Modified Contact Stabilization

Test	Air ft^3/lb BOD_5 in primary effluent	Yearly cost, $
Manual I no DO control	438	38,631
Digital (man in the loop) DO control	377	33,251
MLSS no DO control	507	44,717
Completely Mixed Aerator		
Manual II analog man in the loop DO control	265	23,373
AIR/RAS digital man in the loop DO control	274	24,166
RESPIROMETER/RAS digital man in the loop DO control	419	26,956

P_{MAX} = 600 hp
Q_{MAX} = 12,000 SCFM
Pe = 0.01 $/KWH
Cost Factor 6.9×10^{-6} $/ft.^{3}

Comparing the DO cost figures with Manual I figures yields dollar cost differential on a yearly basis of $5,380. The reduced air use represents an 11% savings and is a reliable number.

MLSS CONTROLLER

The MLSS controller attempted to regulate the MLSS concentration in the secondary treatment aerators to a constant value. The MLSS control was a interim algorithm intended for use in cascade control in other algorithms. The MLSS control was tested, therefore, primarily for check out of the MLSS algorithm performance.

Figure 24 is a time-history of MLSS and RAS for the MLSS controller's intensive test period. The Manual I results are illustrated in Figure 25, although the MLSS values shown are suspect due to some difficulties with the solids concentration meter during this period. Manual Test II results in Figure 28 while not directly comparable reveal a more probable diurnal variation in the MLSS without MLSS control. Solids levels in the aerators tank were maintained nearly at setpoint except during periods of low plant flow. One reason for poor control at low plant flow was because the plant's design imposed a low RAS pumping limit of 8.0 MGD (0.03 Mm^3/day). The controller setpoint was 1500 mg/l, and it can be seen that the majority of the natural MLSS excursions were in the high direction corresponding to periods where the RAS rate was at its lower limit. For low plant influent flows (night and early morning), the 8.0 MGD (0.03 Mm^3/day) RAS rate was too high for the desired solids level so that there was an uncontrolled accumulation of solids in the aerators.

During the MLSS control test, a floating scum and poor settling characteristic developed with the plant operating in the contact stabilization configuration. Table 9 provides a comparison of MLSS-test-removal efficiencies with the Manual I values. All measured quantities -- BOD_5, SS, TOC, and COD --secondary treatment efficiencies during operation with MLSS control are somewhat poorer than for the corresponding Manual I results; although, only in the case of SS efficiency do the results differ by an amount that has at least a 95% chance of being statistically significant. Figures 22 and 23 illustrate the secondary effluent BOD_5 and SS. The deterioration in the settleability of the sludge forced a change in the plants contact stabilization configuration to the plant's original design (completely mixed configuration) for the rest of the control studies and probably produced the decrease in plant performance.

AIR/RAS CONTROLLER

The Air/RAS controller was one of the forms of F/M regulation implemented. It was the intent of these controllers to regulate the instantaneous F/M value such that it was at or below a set value. The different forms of F/M control were based on the means of measuring food-uptake-rate. For the Air/RAS controller, food uptake was implied from

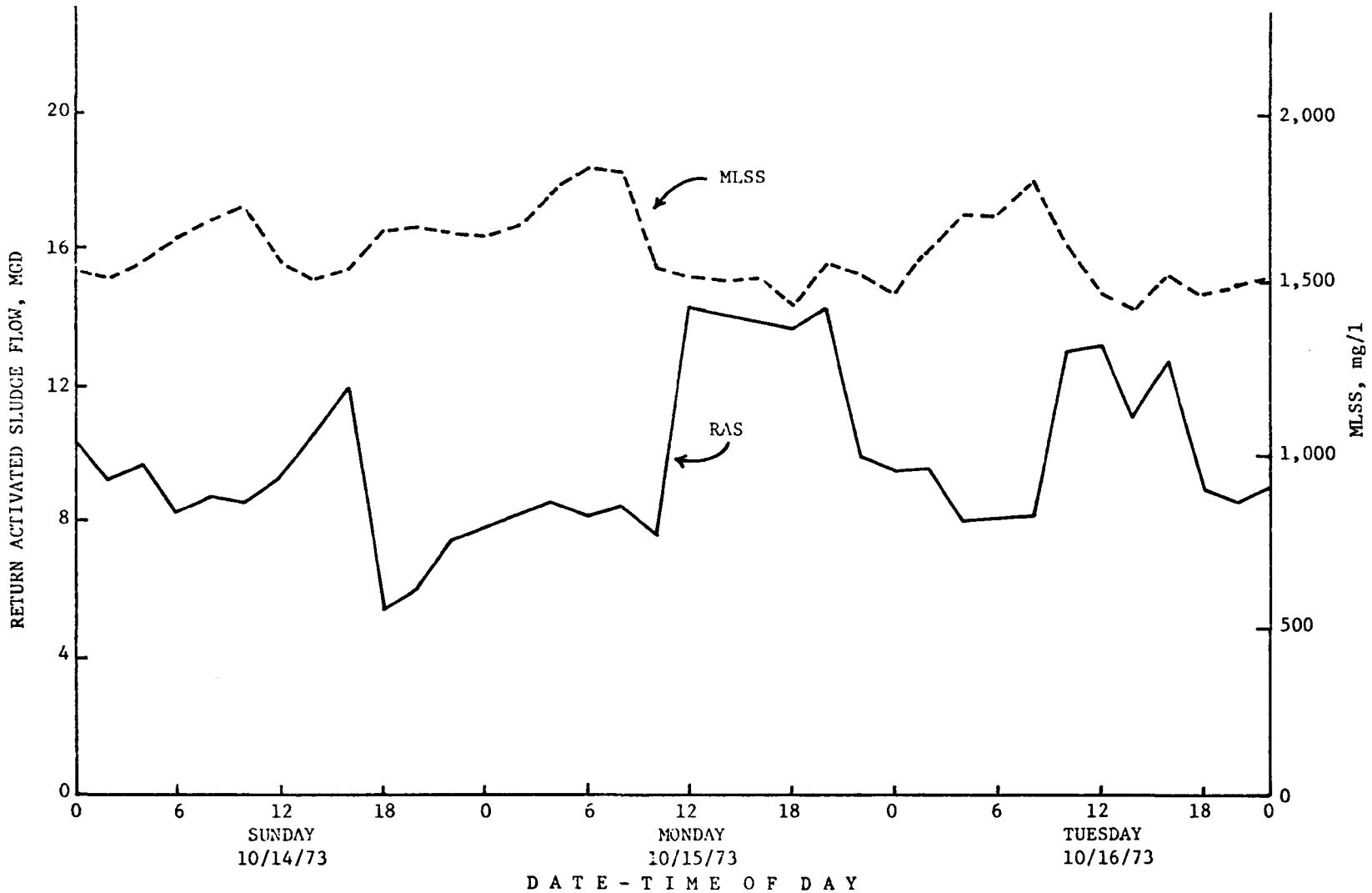

Figure 24. MLSS CONTROLLER: MLSS AND RAS VS. TIME

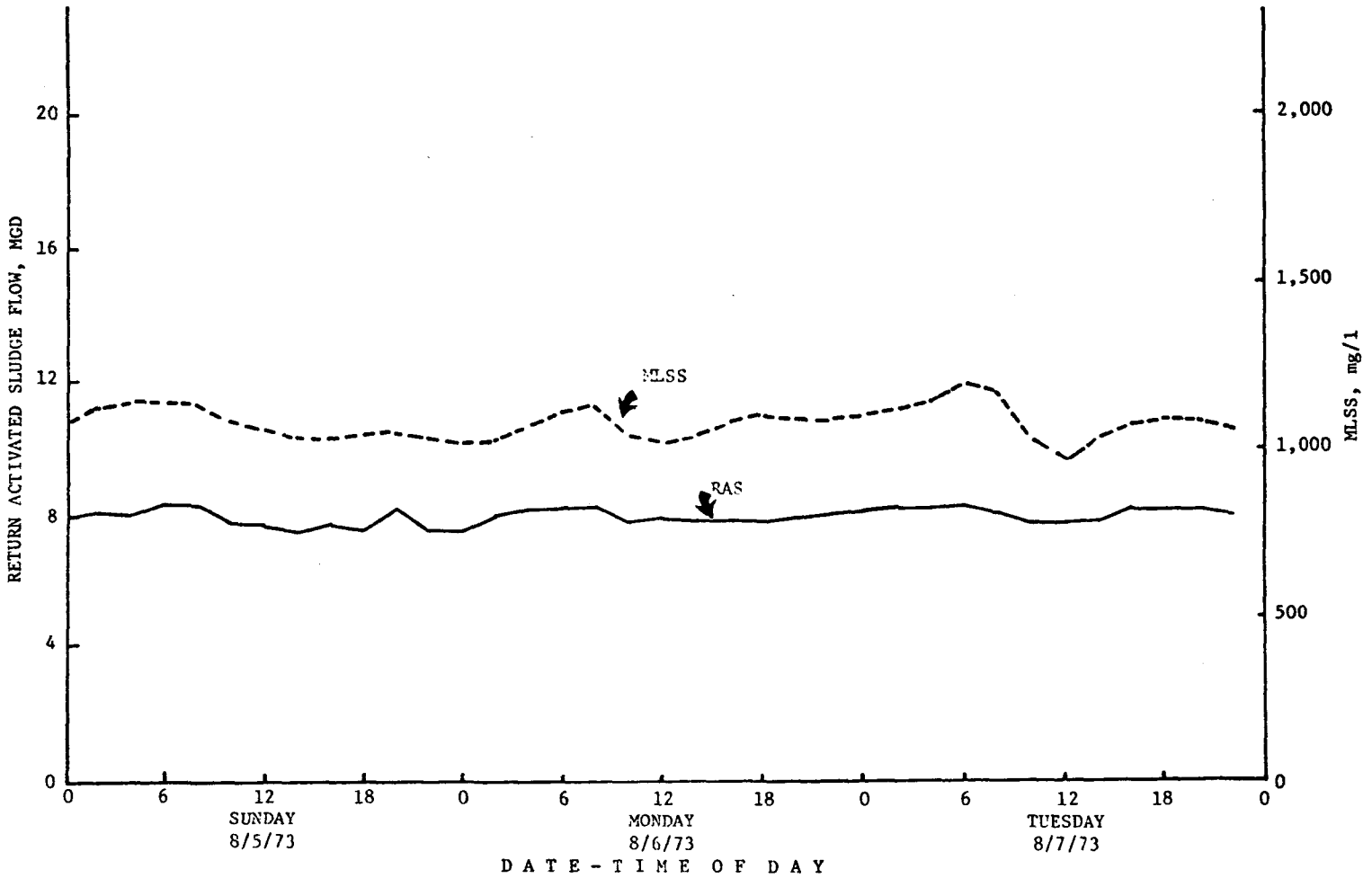

FIGURE 25. MANUAL TEST I: MLSS AND RAS VS. TIME

the secondary process respiration rate as measured by the total air supplied to the aerators.

The Air/RAS controller had two major tasks to achieve:

- Estimate food-uptake-rate from measurements of aeration air flow
- Keep F/M at the setpoint level of 0.33 $days^{-1}$.

Figure 26 illustrating actual and estimated food uptake indicates that the first task was accomplished successfully. Actual food uptake is taken as the product of primary effluent BOD_5 concentration and the volumetric plant flow (assuming neglible soluble BOD_5 in the effluent). Estimated food uptake was calculated using air flow rate in the equation developed in Appendix Section B.2. It is apparent from Figure 26 that if the air flow rate is used in this manner, it provides an excellent respirometry measure of plant BOD_5 loading.

Figure 27 and 28 are time-histories of RAS and the resulting MLSS in the aerators for, respectively, the Air/RAS and Manual Test II intensive periods. Using the actual food uptake (calculated as described above) and MLSS measurements, F/M time-histories for the two intensive test periods are plotted in Figure 29. The F/M ratio, U, as used here is:

$$U = \frac{Q\ S_{pe}}{(V_a+V_c)\ Xf_v} \qquad (23)$$

where S_{pe} is the primary effluent BOD_5 concentration, X is MLSS concentration, and the other terms are defined in the Abbreviations and Symbols.

Both F/M time histories exhibit considerable variation about the desired set-point value. This is a result of large and rapid variations in food loading, and therefore, in food uptake, compared to the small changes in MLSS. Figure 27 shows that the Air/RAS control algorithm attempted to vary the MLSS over the entire RAS pumping range of 20 MGD (0.075 Mm^3/day) and 8 MGD (0.03 Mm^3/day). That pumping range was not sufficient, however, to completely overcome the large concentration inertia inherent in this system because of the large mass of microorganisms in the aerator tanks.

There was, in any event, some improvement attributable to the Air/RAS controller since the late morning peak in F/M, apparent in the manual results, was eliminated. The peak occurred as a consequence of a sharply increased flow which washes out the aerator solids, while at the same time transporting into the aerator a large new quantity of food material. The Air/RAS controller was able to compensate to a limited extent by drawing on the sludge that had accumulated in the clarifiers during the low RAS flow the previous night.

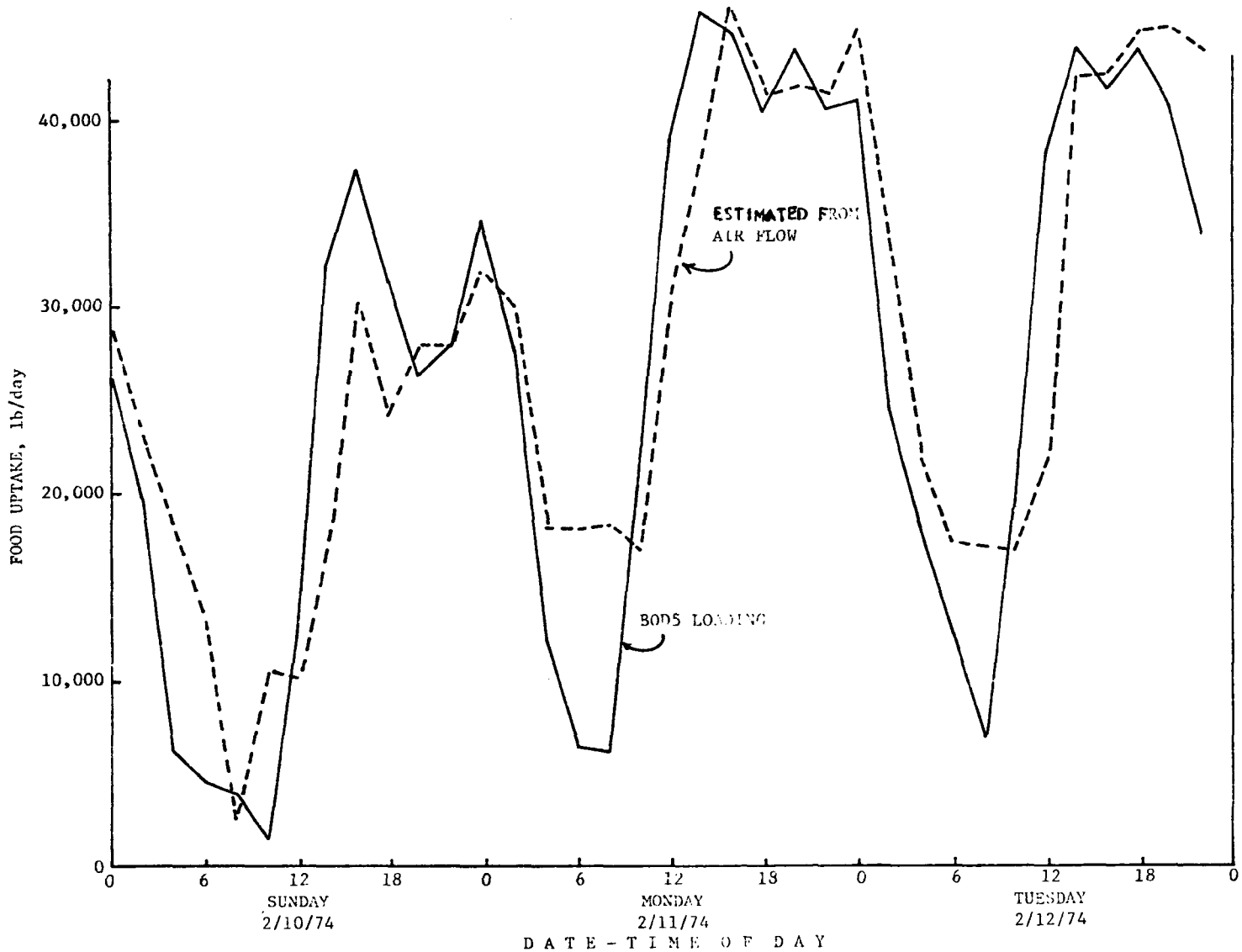

FIGURE 26. AIR/RAS CONTROLLER: ACTUAL AND ESTIMATED FOOD UPTAKE

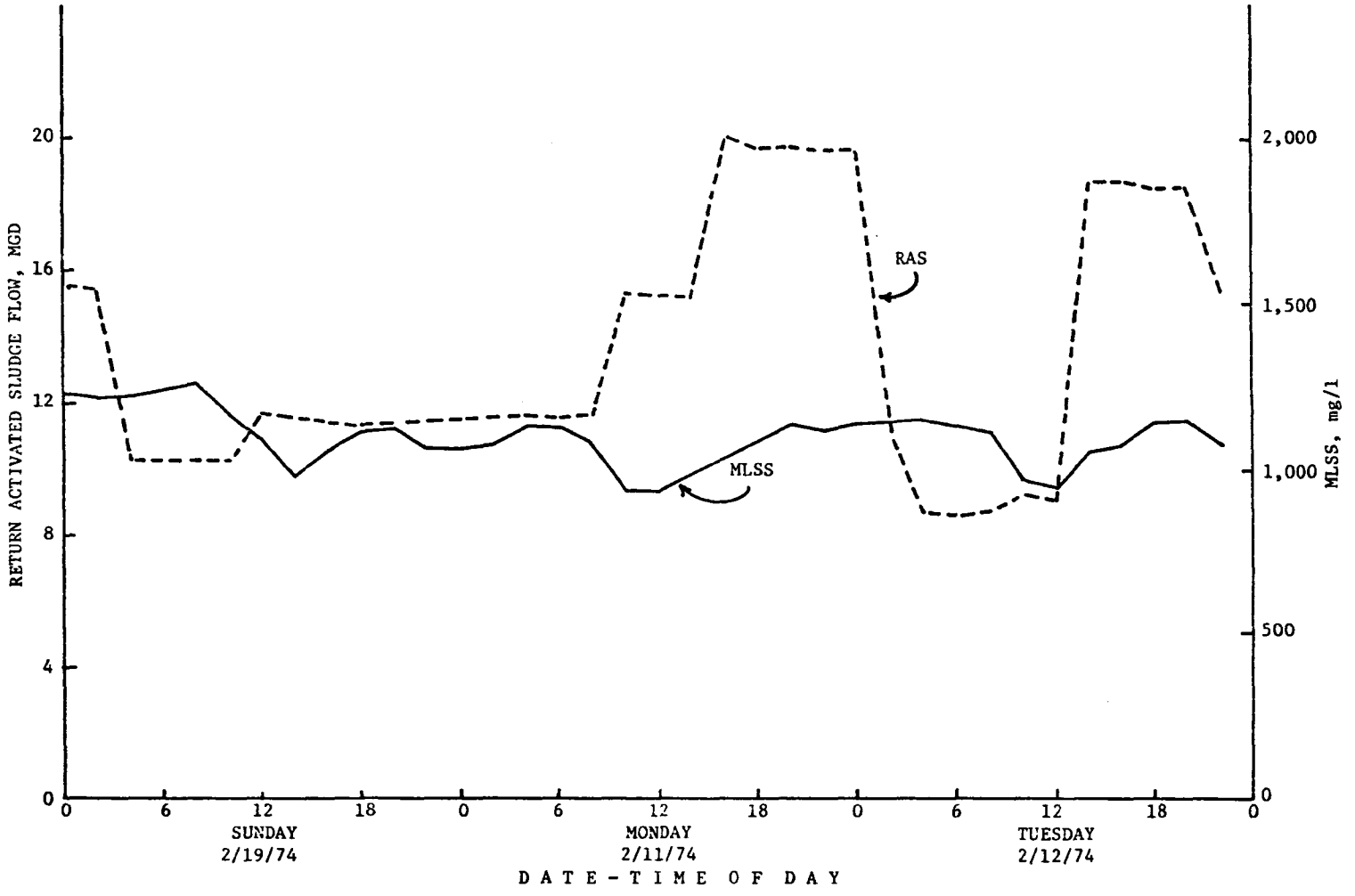

FIGURE 27. AIR/RAS CONTROLLER: MLSS AND RAS VS. TIME

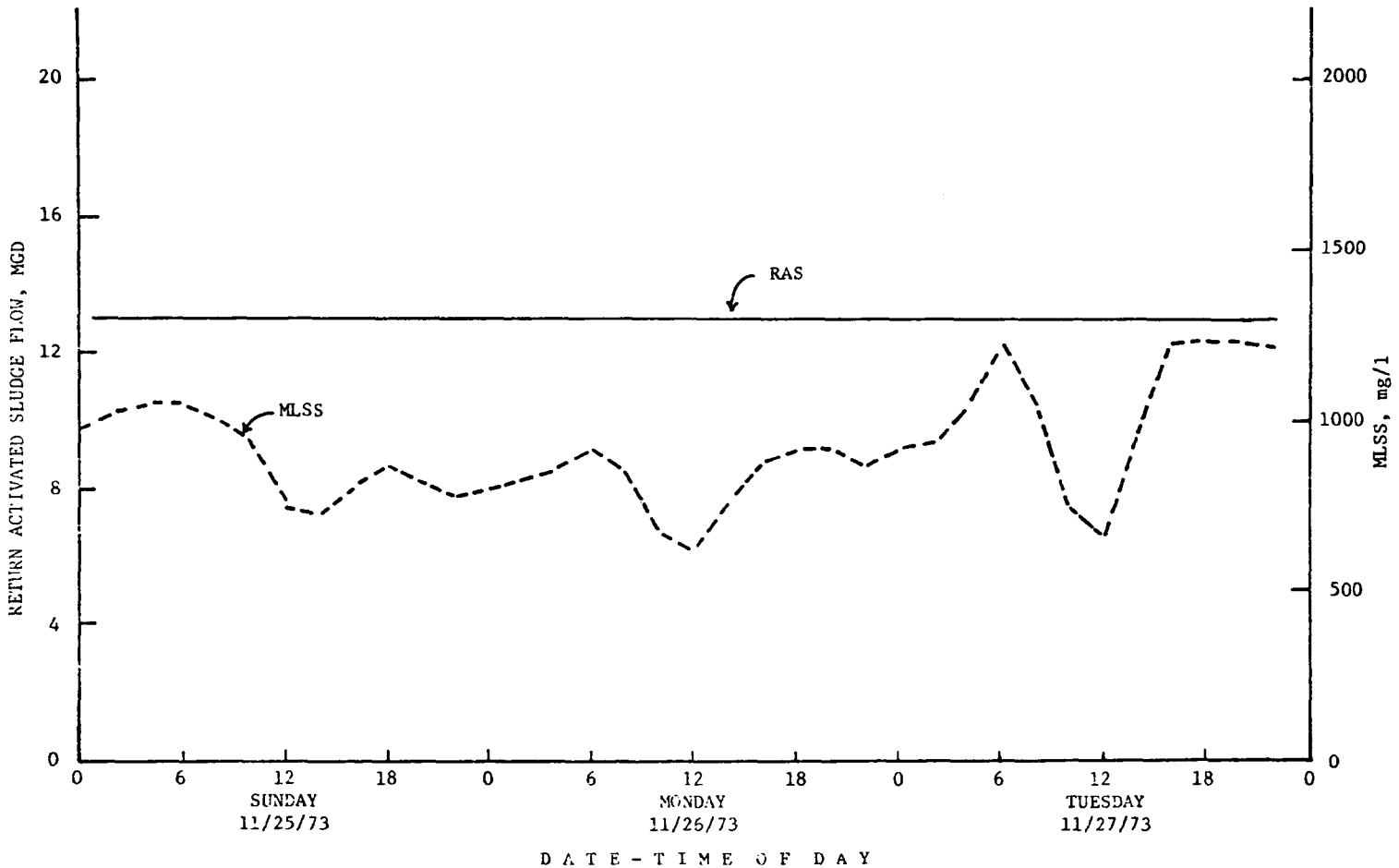

FIGURE 28. MANUAL TEST II: MLSS AND RAS VS. TIME

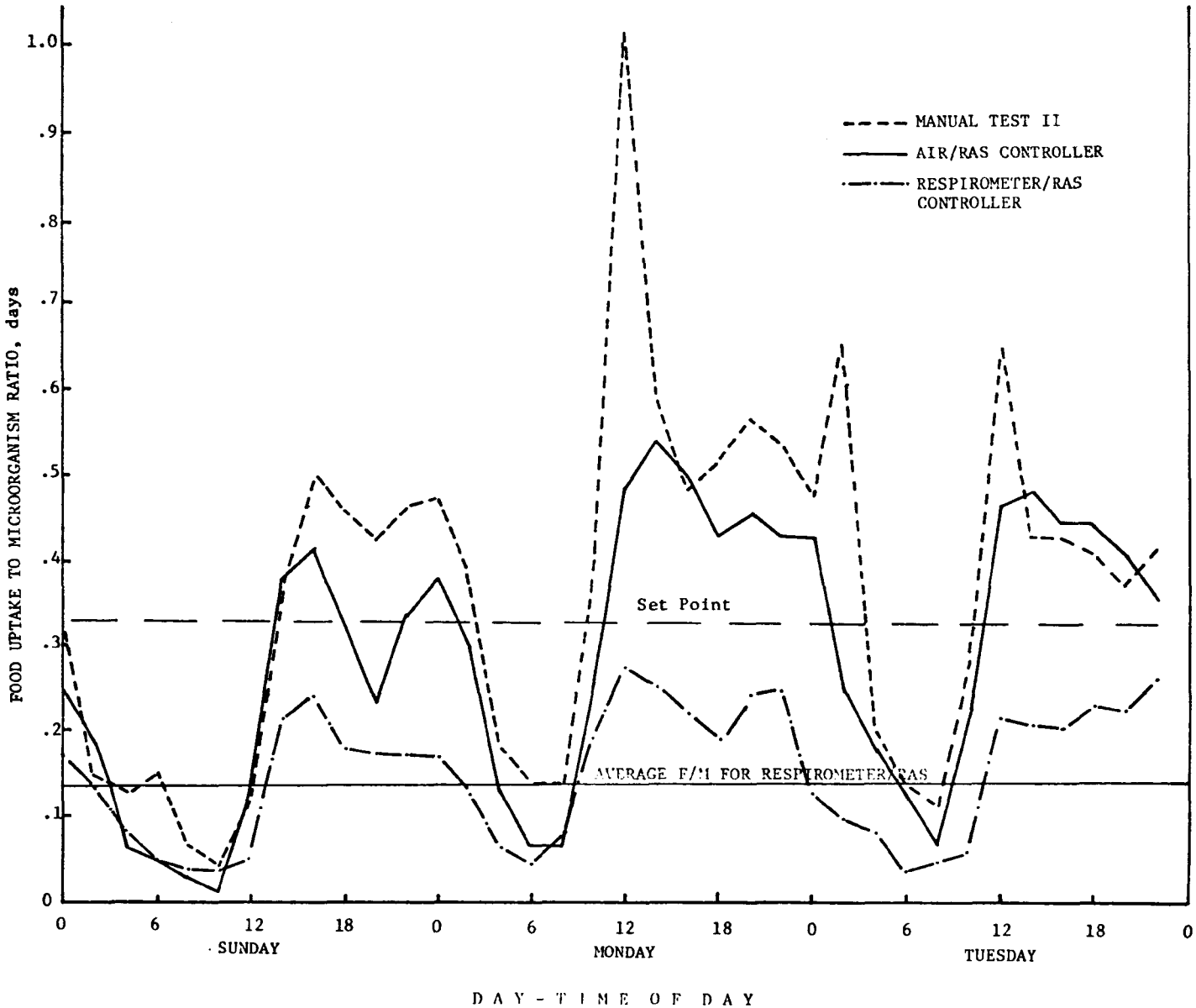

FIGURE 29. COMPARISON OF AMNUAL VS. AUTOMATIC CONTROL OF F/M

The clarifier storage potential was not sufficient, however, to meet the prolonged, high, daytime food demands as can be seen by the excursions of F/M above setpoint. Provision for additional, aerated, sludge storage is necessary to implement a full-time F/M ratio controller adequately, as is discussed in the chapter on algorithm design. Separate sludge storage, however, requires that more detailed consideration be given such process variables as sludge age, wasting rate control, and clarifier sludge accumulation. Answers to these questions could not be adequately furnished by this demonstration, and the previously mentioned difficulties with separate sludge storage in the contact stabilization configuration were a consequence.

Reference to Table 9 for comparison of the secondary treatment efficiencies from the Air/RAS comparison to the Manual II test results reveals a drop for three of the four measured efficiencies with Air/RAS control. Only BOD_5 removal efficiencies are close enough to be considered statistically the same.

Figure 30 and 31 illustrating absolute values of secondary effluent BOD and SS concentrations indicate much less variation in mean removals between Air/RAS and Manual II than might be expected from the secondary removal efficiency comparison. In a similar vein, the overall plant removal efficiencies are practically the same for TOC, COD, and SS, while BOD_5 is significantly better for the Air/RAS controller.

A probable explanation for the anomaly of low, Air/RAS secondary removal efficiencies is the relatively low, average, secondary unit loading for that period as shown in Table 11. For a given, average, food to microorganism ratio, the average secondary effluent quality in absolute terms is fixed by biological activity constraints and is reasonably constant. Therefore, if the influent contains less food material (i.e., lower loading), the effective efficiency is reduced. During the Air/RAS test period, there was above average removal efficiency for all materials in the primary treatment while in the Manual II period the primary efficiency is below average. The result was an across-the-board, lower, relative secondary unit loading for the Air/RAS period which, for the reasons cited above, could well account for lower observed removal efficiencies.*

Overall, the removal efficiency of the Air/RAS form of F/M controller was apparently slightly worse than for the comparable manual period. There is, however, some question as to the finality of this conclusion for the following reasons:

*The earlier efficiency comparisons for the dry season tests are more reliable since loading differences between tests were less, and were not uniformly either higher or lower for the four measured quality variables.

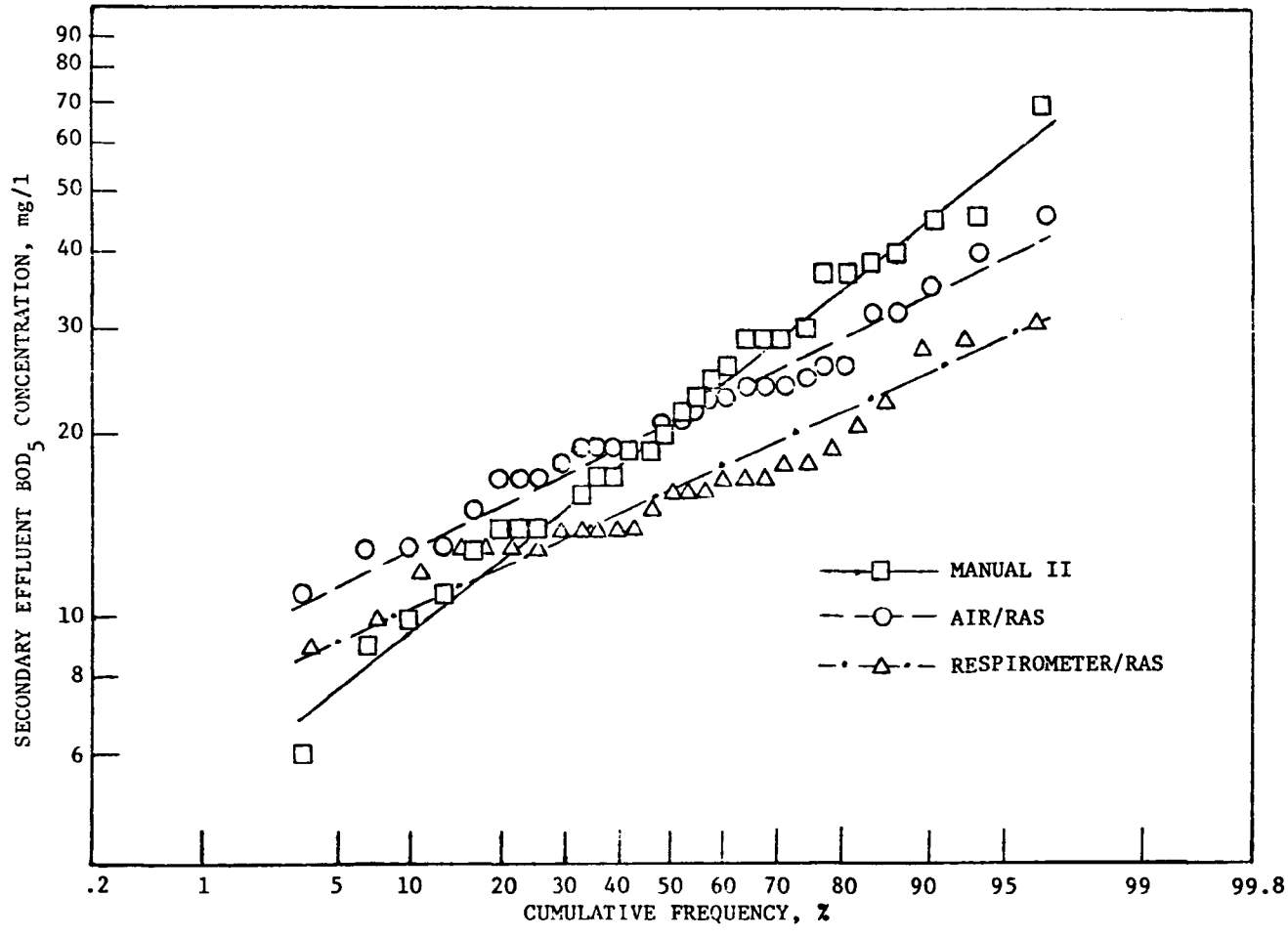

FIGURE 30. WET SEASON TEST: SECONDARY EFFLUENT BOD_5 CONCENTRATION VS. LOG-NORMAL FREQUENCY DISTRIBUTION

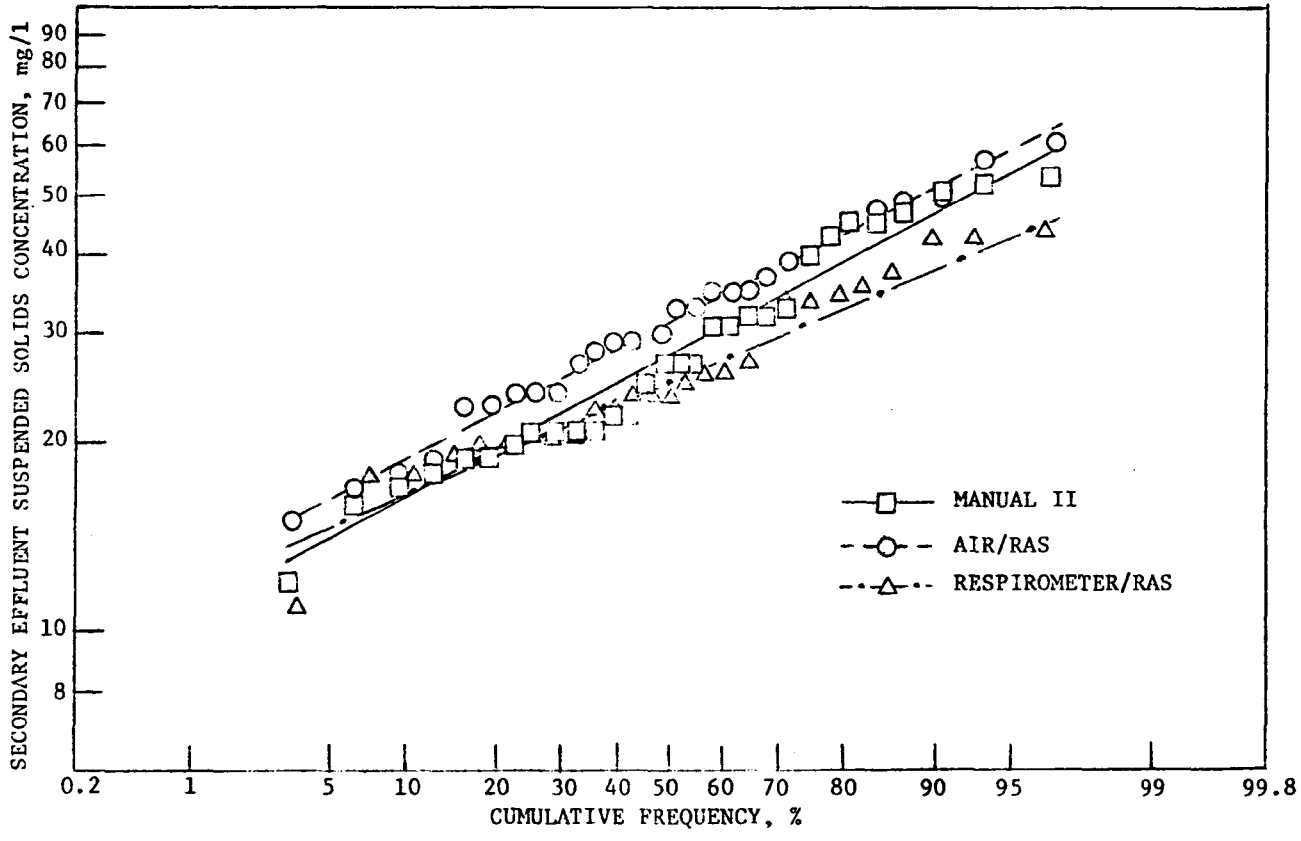

FIGURE 31. WET SEASON TEST: SECONDARY EFFLUENT SUSPENDED SOLIDS CONCENTRATION VS. LOG-NORMAL FREQUENCY DISTRIBUTION

- A large variation in secondary treatment loadings between test periods that could adversely affect Air/RAS results

- Palo Alto Plant design constraints on implementation of the Air/RAS controller did not allow adequate, separate, sludge storage necessary for the controller to maintain a really tight F/M

Table 11. AERATOR LOADING FOR THIS STUDY'S SIX TEST PERIODS

Test	Aerator loadings, lb/1000 ft^3 day			
	SS	BOD	TOC	COD
Manual I	21.9	34.1	23.9	62.9
DO	18.9	39.3	21.4	58.9
MLSS	20.1	35.0	21.8	55.8
Manual II	18.5	38.4	17.5	52.3
Air/RAS	15.3	31.6	13.0	41.2
Respirometer/RAS	15.7	21.43	12.3	42.2

Further testing is needed before dismissing the possibility for effluent quality improvement using Air/RAS control.

Table 10, reveals the yearly dollar aeration cost for Air/RAS as similar to that for analog man in the loop DO control (Manual II). Air usage, for practical purposes, was the same for both tests. As mentioned in the discussion of the DO controller results, however, the operators effectively maintained a constant DO level during the Manual II test without computer commands. The original, fixed-schedule, air-blowing rate of Manual I was not followed since the compressor power-cost savings attributable to DO had already been demonstrated.

RESPIROMETER/RAS CONTROLLER

This variation of F/M regulation obtained a direct measurement of oxygen uptake (respiration rate) from a sample of aerator mixed liquor and, from that measurement, inferred the food loading in the secondary process. RAS flow was then set based on the suspended solids level necessary to maintain an instantaneous F/M value at or below the desired set-point value of 0.33 $days^{-1}$.

Figure 32 illustrates results for the first performance task of the Respirometer/RAS controller, estimating food uptake. Here, as in the Air/RAS discussion, actual food uptake is represented by the product

of primary effluent BOD_5 concentration and volumetric plant flow. Estimated food uptake was calculated from the respirometer's oxygen uptake reading according to the formula developed in Appendix B.5. Diurnal variations of the same periodicity occured in both actual and estimated food uptake, but the estimate based on respiration rate lags the actual uptake and is also attenuated in amplitude. Part of the lag is attributable to the one-hour sample-processing time of the respirometer. The remainder of the lag, plus the amplitude attenuation, are probably attributable to the following:

- Transport lag within the aerators - Less than theoretically perfect mixing causes a lag between waste concentrations at the influent point versus the effluent point where respirometer sample was taken.

- Biological uptake lag - Actual biological oxidation of material occurs only after the occurrence of all preceding lags associated with diffusion of substrate into the cell and conversion of nonsoluble materials to usable soluble substances. This process also has an averaging effect that attenuates peak variations in substrate utilization when compared to food-input variations.

An interesting implication of the less variable food utilization (when compared to aerator loading) for fully mixed operation is that there is probably less necessity for tight, instantaneous, F/M control based on food loading. If F/M control based on utilization is considered instead, much less diurnal variation would be observed since the volume of biological processes tend to smooth out the food loading peaks to some extent. Of course, there still are significant remaining variations in F/M, even based on actual food utilization; therefore, F/M control is still a desirable objective.

Figure 33 shows the RAS flow and resultant MLSS for the Respirometer/RAS intensive test period. Note that there were comparatively modest changes in MLSS. As mentioned in the Air/RAS controller results, lack of sufficient sludge storage capacity and limitations on RAS pumping rates (especially the low limit which prevented some additional accumulation of sludge in the clarifiers at night) made improved MLSS control impossible.

Resultant diurnal variation in F/M for the Respirometer/RAS controller is compared to Manual II and Air/RAS results in Figure 29. The sludge retention time of the secondary process was changed during the respirometer/RAS control evolution because of the demands by the plant's thickeners for less wasting of the mixed liquor. This change increased the reactor clarifiers solids inventory and affected the F/M set-point. Thus, while the computer was set to control at a set-point of F/M = .33 day^{-1}, the plant actually operated a lower average F/M as shown in

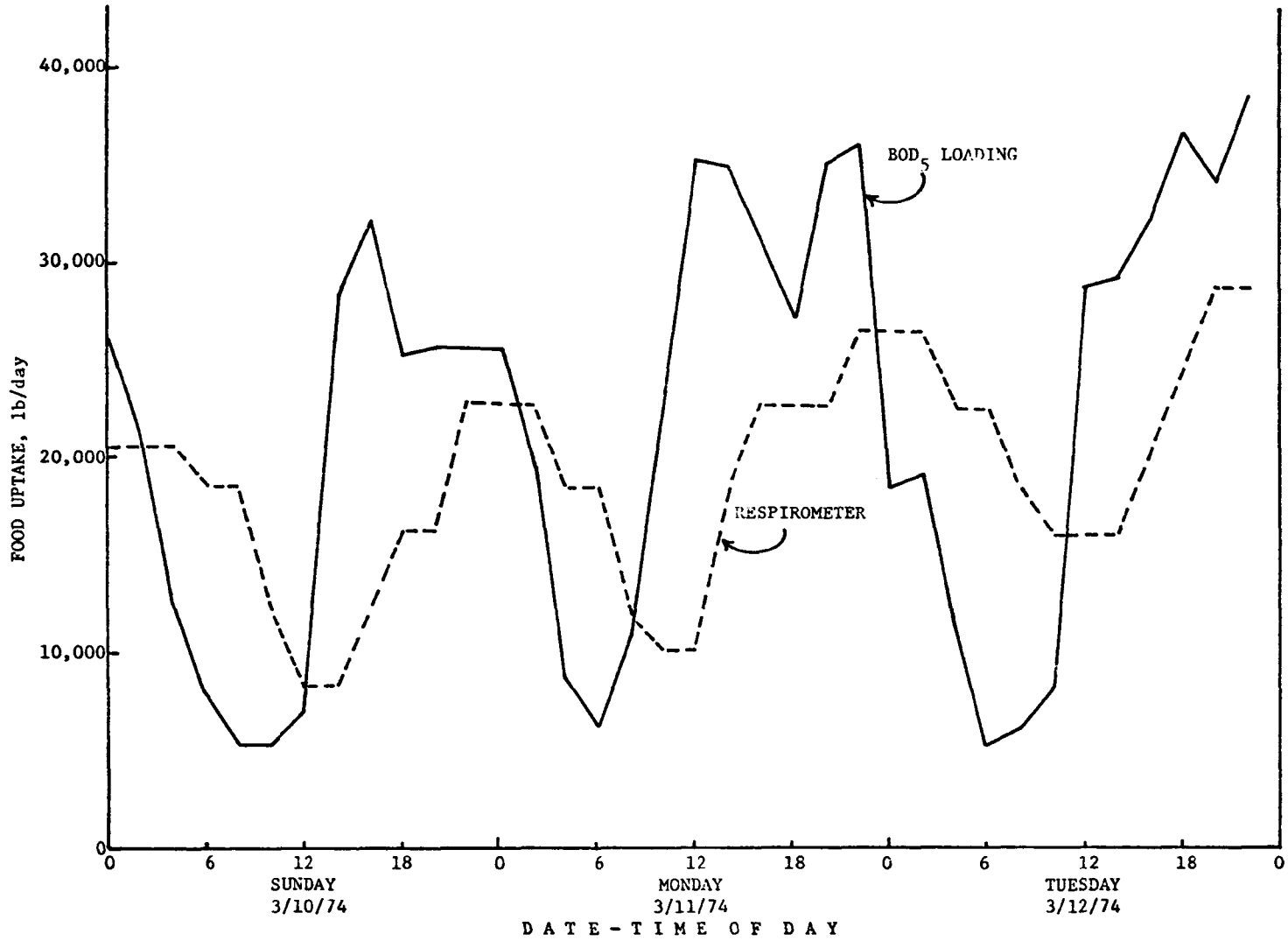

FIGURE 32. RESPIROMETER/RAS CONTROLLER: ACTUAL VS. ESTIMATED FOOD UPTAKE

Figure 29 and did not control to set-point. The F/M ratio was kept below setpoint at all times, as was desired. Also, as was the case with the Air/RAS, the late morning peaks in F/M on Monday and Tuesday were essentially eliminated.

The point of keeping F/M constant was to reduce the diurnal variability of effluent quality. Listed below are bi-hourly means and standard deviations of secondary effluent concentrations of the quality measurements for the 3 day intensive test periods. The relative variability is the standard deviation divided by the mean.

Three Day Intensive Test Results for Secondary Effluent

	Respirometer/RAS			Manual II		
	mean	standard deviation	relative variability	mean	standard deviation	relative variability
SS,mg/l	31.3	9.4	30%	20.3	7.4	37%
BOD,mg/l	12.1	4.1	34%	8.7	4.2	48%
TOC,mg/l	18.4	2.9	16%	19.6	3.5	18%
COD,mg/l	72.4	9.8	14%	58.8	10.0	17%

In all cases except SS, the absolute standard deviation in daily effluent quality is less for the Respirometer/RAS controller. The relative variability (standard deviation divided by the mean) is less in every case for the Respirometer/RAS. Thus, the F/M ratio regulation does exhibit the expected result of reducing diurnal effluent quality swings. The benefit of this result is an overall improvement in effluent quality and removal efficiency.

Table 9 presents the efficiencies for the plant obtained during the Respirometer/RAS test. Compared to Manual II results for (biological) treatment, the Respirometer/RAS showed equal results for BOD_5, significantly improved SS removal, slightly better COD, and slightly worse TOC. In the comparison of Respirometer/RAS to Manual II below a negative sign indicates decreased performance for the Respirometer/RAS control when compared to Manual II. The absolute change is defined as the difference between the percent removal efficiencies of the Respirometer/RAS and the Manual II. The change relative to the Manual II is the absolute change divided by the Manual II removal efficiencies.

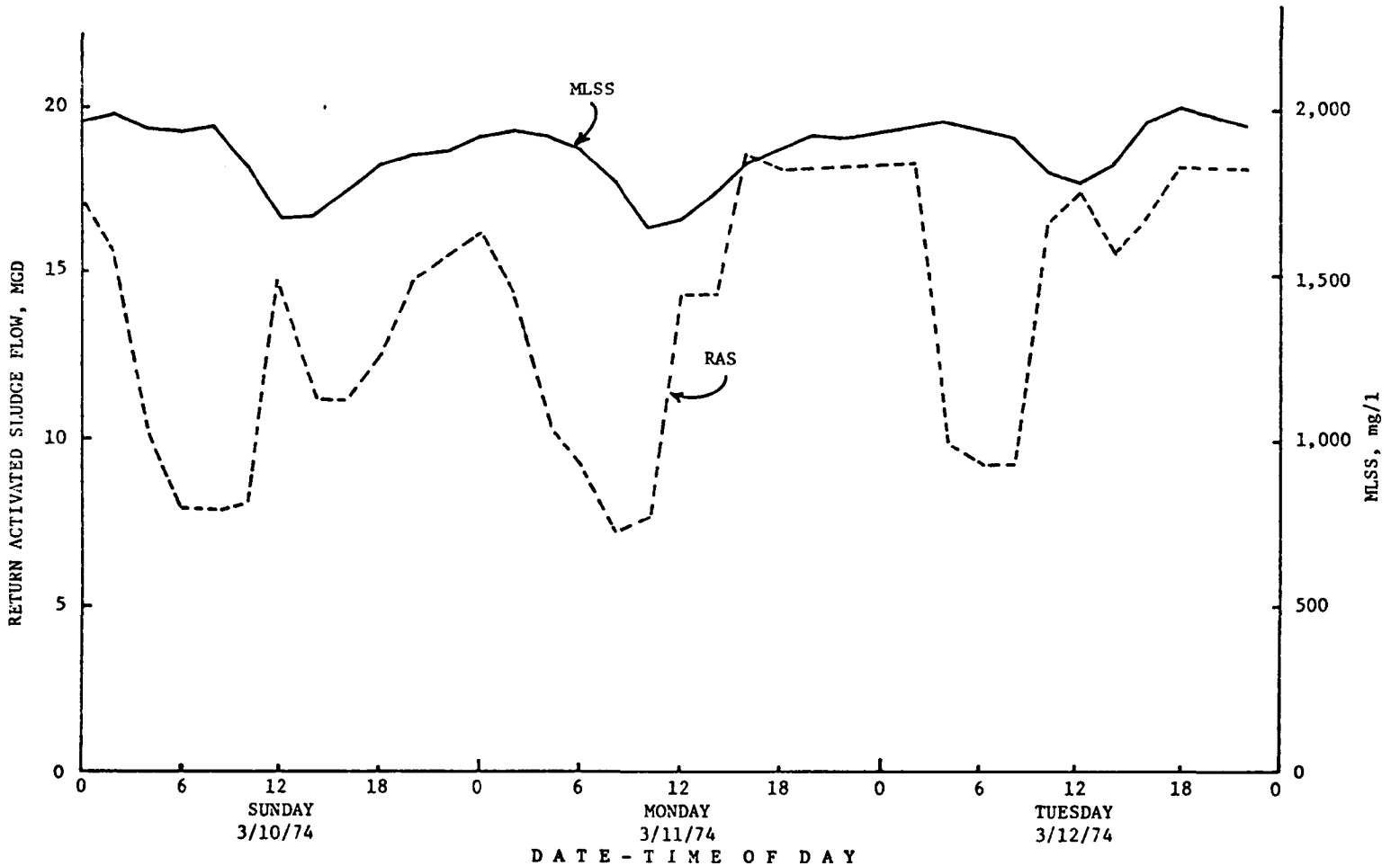

FIGURE 33. RESPIROMETER/RAS CONTROLLER: MLSS AND RAS VS. TIME

Secondary Efficiency	Absolute Change	Change Relative To Manual II
SS	+ 4.9%	+ 8.4%
BOD_5	0.0	0.0
TOC	- 4.2%	- 6.2%
COD	+ 0.8%	+ 1.2%

These removal efficiencies of the biological process in aggregate showed no significant improvement over the manual results, but were achieved for abnormally light loadings in each quantity as indicated in Table 11. The primary process during the Respriometer/RAS operation exhibited unusually efficient performance and thus reduced the loading to the biological reactor. An improved effluent quality occurred during operation with the Respirometer/RAS controller as shown in Figures 30 and 31. Both BOD_5 and SS concentrations in the secondary effluent showed reduced means, as well as less dispersion, when compared to Manual II and Air/RAS. Mean values obtained are:

	Respirometer/RAS	Manual II	Air/RAS
BOD_5,mg/l	16.5	21	21
SS,mg/l	25	28	31

Furthermore, the total removal efficiencies of the plant when it was under Respirometer/RAS control (Table 9) were the highest for any test period for the entire demonstration. Total plant efficiency improvements from Manual II to Respirometer/RAS were:

Plant Total Efficiency,	Absolute Change	Change Relative to Manual II
SS	+ 4.0%	+ 5.0%
BOD_5	+ 10.5%	+ 12.9%
TOC	+ 3.7%	+ 5.2%
COD	+ 2.2%	+ 2.9%

In total then, there was demonstrable positive improvement in effluent quality during operation with the Respirometer/RAS F/M controller. The improvement, however, was probably not related only or even chiefly to the application of respirometer/RAS control. During this control test, the changes in the plant wasting, at the request of the City of Palo Alto, increased the solids inventory in the biological process compared to that during all other operation. The increased inventory produced

significantly lower average operating F/M. The combination of improved primary performance and the lower average F/M in the biological process undoubtedly contributed significantly to the observed improved overall plant performance. While the operation with Respirometer/RAS control exhibited the smallest variability in the instantaneous F/M, further work is needed to assess whether this reduced variability in the F/M significantly contributed to the observed improvement in plant performance.

From Table 10 the yearly aeration cost increase of Respirometer/RAS over Manual II (analog man in the loop DO control) was $3,583. The air figure has been corrected for the period from February 20 to 27 in which the DO setpoint was at 2.0 mg/l, and extra air was required compared to operation at the normal 0.75 mg/l setpoint. Still, there was a substantial increase in usage per pound of BOD_5 loading in the aerator which caused the aeration cost increase. Operation of the plant at the significantly lower average F/M of approximately 0.15 $gmBOD_5/gmMLVSS/day$ increased the air requirements through increased endogenous respiration of the sludge mass. A revised net cost increase from Manual II to Respirometer/RAS test is then only $1,852. (operation at significantly lower F/M (higher MLVSS) increases air requirements through increased endogenous respiration of this sludge mass.)

REFERENCES

1. Martin, C. F., J. F. Petersack, and R. G. Smith, Palo Alto Wastewater Treatment Plant Automation Project, May 1974.

2. Wells, C. H., Phase I Report Palo Alto Wastewater Treatment Plant Automation Project, Process Control Descriptions, Report for California State WQCB by Systems Control, Inc., May 1973.

3. Petersack, J. F. and C. F. Martin, Phase I Report Palo Alto Wastewater Treatment Plant Automation Project Task 2: Experiment Design, prepared for State of California Water Quality Control Board by Systems Control, Inc., July 1973.

4. Petersack, J. F., R. G. Smith, J. J. Ogan, Palo Alto Wastewater Treatment Plant Automation Project Task 3: Development of Methodology, Report for State of California Water Quality Control Board by Systems Control, Inc., February 1974.

5. Operation and Maintenance Manual, City of Palo Alto Water Quality Control Plant, November 1971.

6. American Public Health Association, Standard Methods for the Examination of Waste Water - 13th Edition, 1971.

7. Metcalf & Eddy, Inc., Wastewater Engineering, McGraw-Hill Book Company New York 1972.

8. Hawkes, H.A., The Ecology of Waste Water Treatment, Macmillan Company, New York 1963.

9. Iroshoff, Karl, W. J. Miiller, and D. K. B. Thistlethwayte, Disposal of Sewage and Other Water-Bome Wastes, Ann Arbor Science Publishers, Inc., (Ann Arbor) 1971.

10. Bolton, R. L., and L. Klein, Sewage Treatment: Basic Principles and Trends, Ann Arbor Science Publishers, Inc., (Ann Arbor) 1971.

11. Roesler, J. A., The Effect of Automatic Dissolved Oxygen Control on the Performance of the Activated Sludge Process, Environmental Protection Agency Report from the Advanced Waste Treatment Research Laboratory, (Cincinnati, Ohio) 1974.

12. Smith, Robert, Electrical Power Consumption for Municipal Wastewater Treatment, Environmental Protection Agency Report EPA-R2-73-281, July 1973.

13. Gandy, Anthony F., Jr. and Elizabeth T. Gandy, Biological Concepts for Design and Operation of the Activated Sludge Process, Report for the Environmental Protection Agency by Oklahoma State University, Project #17090 FQJ, September 1971.

14. Petersack, J. F., and D. E. Stepner, "Computerized Data Management and Control of a Secondary Wastewater Treatment Plant," presented at the International Association on Water Pollution Conference, (London, England) September 1973.

SECTION X

GLOSSARY

BOD_5	Five-day biochemical oxygen demand, mg/l
COD	Chemical oxygen demand, mg/l
DO	Dissolved oxygen, mg/l
$\hat{DO}$	Mean dissolved oxygen
$\dot{DO}$	1st derivative at dissolved oxygen
$\ddot{DO}$	2nd derivative of dissolved oxygen
dF/dt	Food uptake rate, mg/l day^{-1}
$\hat{f}_\tau$	Error signal
F/M	Food-to-microorganism ratio, gm BOD_5/gm MLVSS/day
K	GAIN
K_d	Microorganism death rate, $days^{-1}$
L	Fraction of original BOD_5 remaining in cell material after BOD_5 use in cell synthesis
MG	Millions of gallons
MGD	Millions of gallons per day
MLSS	Mixed liquor suspended solids, mg/l
Q	Plant flow, MGD
Q_A	Air flow, SCFM
Q_{O_2}	Oxygen use rate in biological oxidation, SCFM
Q_R	RAS flow rate, MGD
Q_W	Waste sludge flow rate, MGD
R	Respiration rate, mg/l
RAS	Return activated sludge

S_o	Primary effluent substrate, mg/l
S_a	Aerator substrate, mg/l
S_c	Clarifier substrate, mg/l
SCFM	Standard cubic feet per minute
SS	Suspended solids, mg/l
T	Time constant
t	real time
U	Food to microorganism, day^{-1}
μ	Velocity
V_a	Aerators volume, mg
V_c	Clarifier volume, mg
V_r	Respirometer sample-chamber volume, liters
WAS	Waste activated sludge
X_a	Aerator suspended solids, mg/l
X_c	Clarifier suspended solids, mg/l
X_R	RAS suspended solids, mg/l
Y	Mass yield of microorganisms per unit mass substrate consumed
y	BOD_5 mass demand equivalent per unit mass of microorganisms
α	Constant in DO equation
Δ	Time change in minutes
θ_c	Mean cell residence time of microorganisms in the secondary system

APPENDIX A

FLOWCHARTS

ASSOCIATED DATA STORAGE (ADS) DATA DEFINITION FOR DO/RAS CONTROL

ADS Number	Variable	Definition
1	C1	
2	C2	Gain terms
3	C3	
4	C4	
5	XR	SS in RAS
6	QRMAX	High limit
7	QRMIN	Low limit
8	QTOL	Deadband
9-20	Not used	

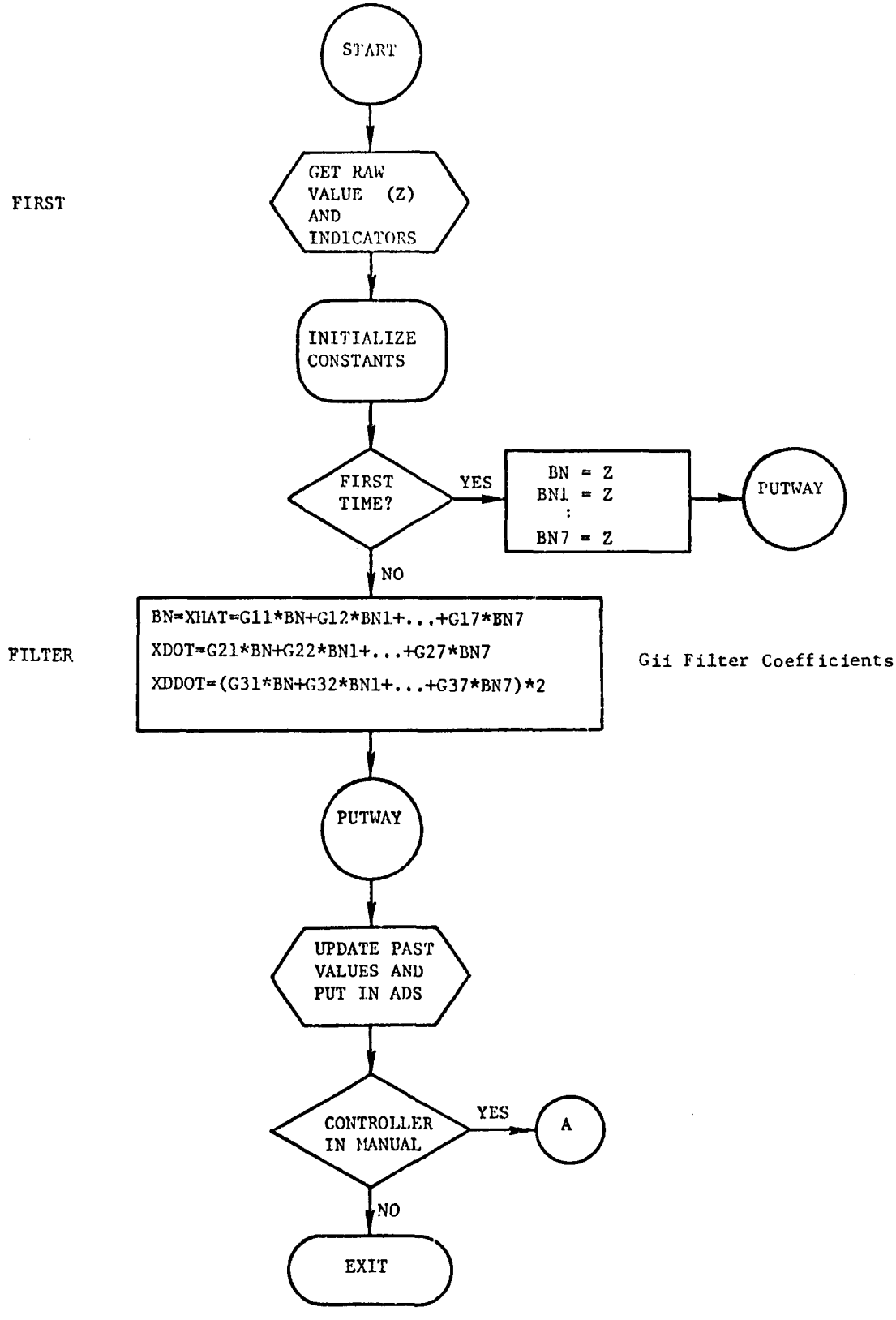

DO AND MLSS CONTROL FLOWCHART

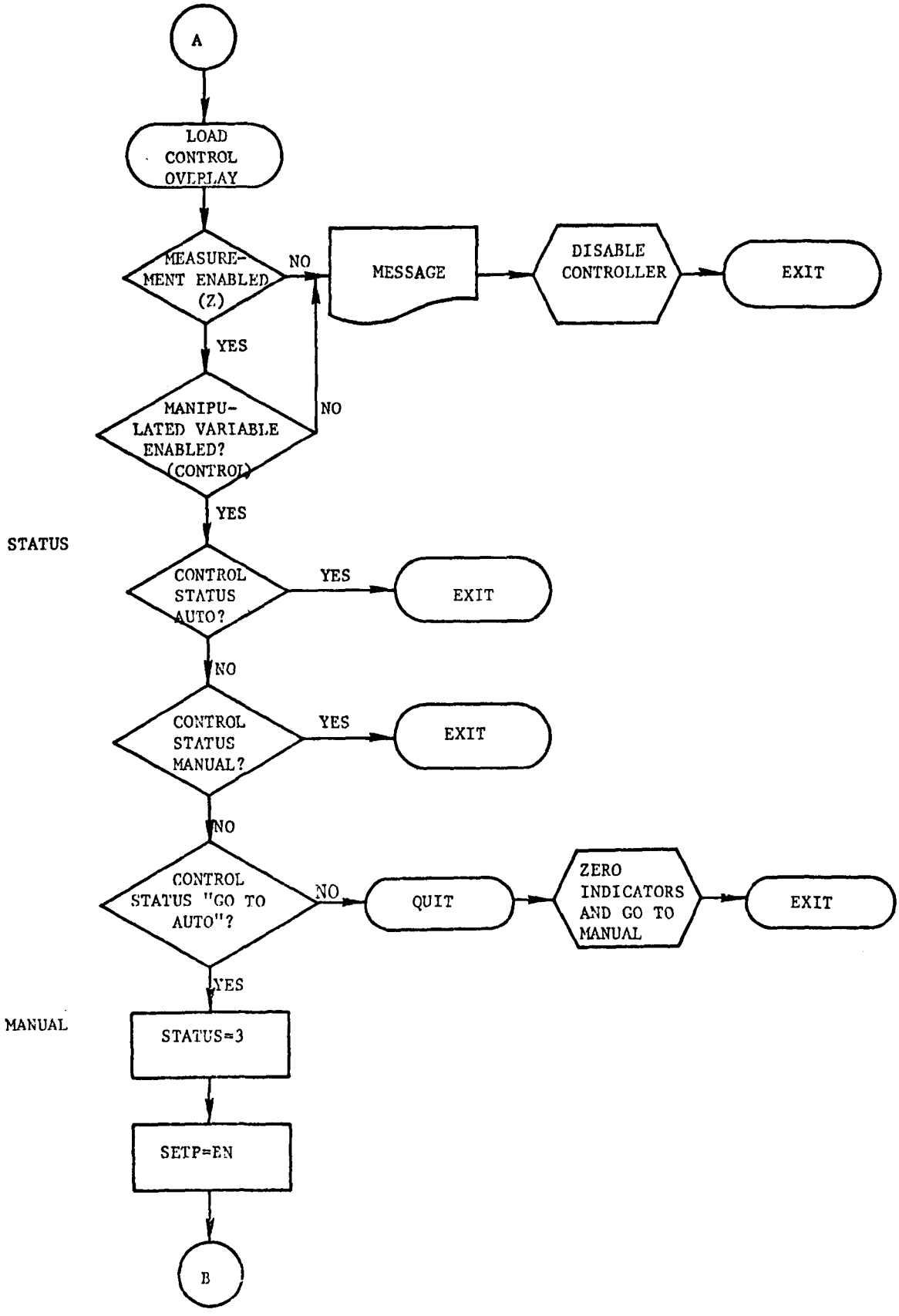
A
LOAD CONTROL OVERLAY
MEASURE-MENT ENABLED (Z)
NO
MESSAGE
DISABLE CONTROLLER
EXIT
YES
MANIPU-LATED VARIABLE ENABLED? (CONTROL)
NO
YES
STATUS
CONTROL STATUS AUTO?
YES
EXIT
NO
CONTROL STATUS MANUAL?
YES
EXIT
NO
CONTROL STATUS "GO TO AUTO"?
NO
QUIT
ZERO INDICATORS AND GO TO MANUAL
EXIT
YES
MANUAL
STATUS=3
SETP=EN
B

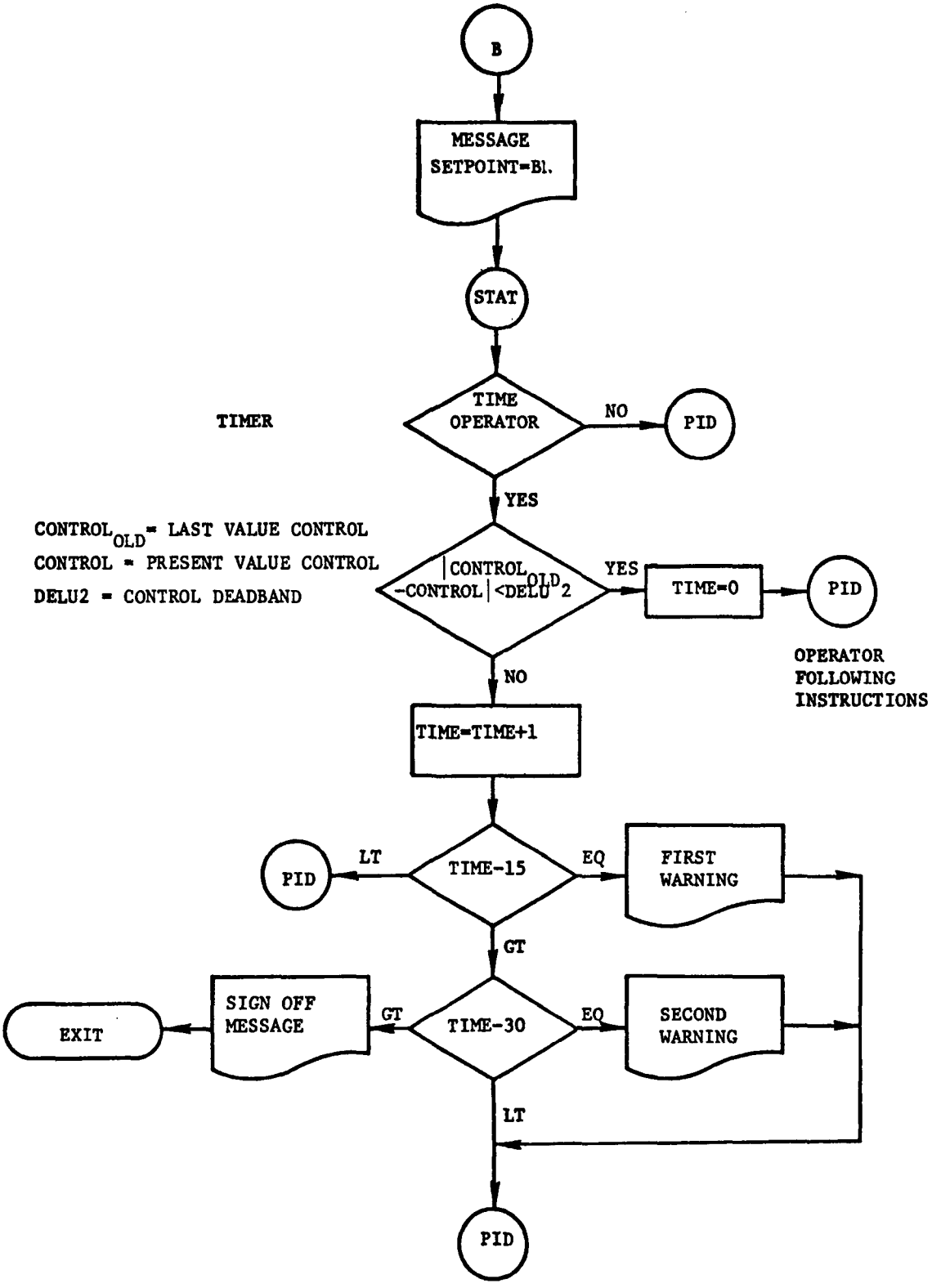
B
MESSAGE
SETPOINT=B1.
STAT
TIMER
TIME
OPERATOR
NO
PID
YES
CONTROL$_{OLD}$= LAST VALUE CONTROL
CONTROL = PRESENT VALUE CONTROL
DELU2 = CONTROL DEADBAND
|CONTROL$_{OLD}$
-CONTROL|<DELU2
YES
TIME=0
PID
OPERATOR
FOLLOWING
INSTRUCTIONS
NO
TIME=TIME+1
PID
LT
TIME-15
EQ
FIRST
WARNING
GT
EXIT
SIGN OFF
MESSAGE
GT
TIME-30
EQ
SECOND
WARNING
LT
PID

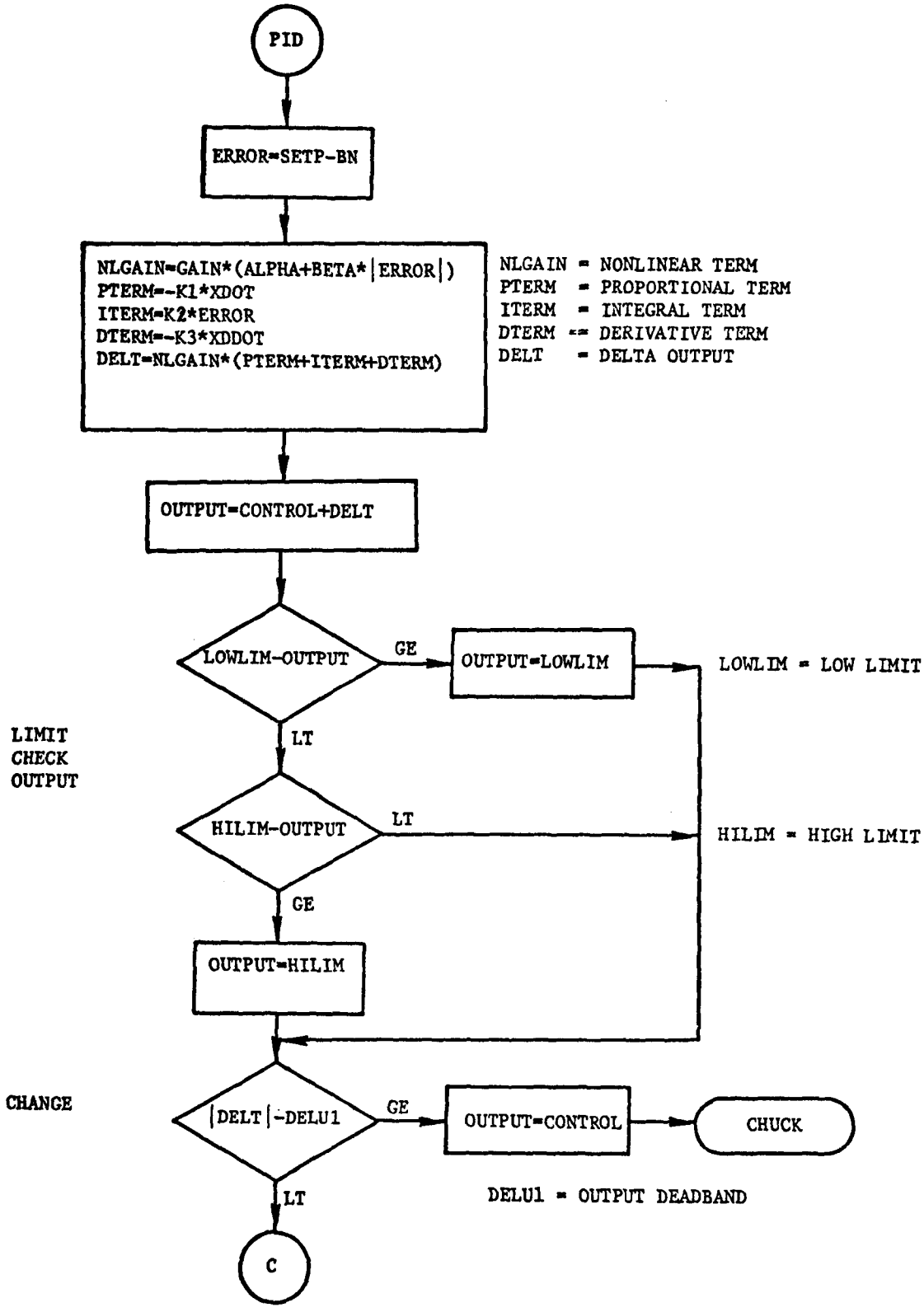
PID
ERROR=SETP-BN
NLGAIN=GAIN*(ALPHA+BETA*|ERROR|)
PTERM=-K1*XDOT
ITERM=K2*ERROR
DTERM=-K3*XDDOT
DELT=NLGAIN*(PTERM+ITERM+DTERM)
NLGAIN = NONLINEAR TERM
PTERM = PROPORTIONAL TERM
ITERM = INTEGRAL TERM
DTERM = DERIVATIVE TERM
DELT = DELTA OUTPUT
OUTPUT=CONTROL+DELT
LOWLIM-OUTPUT
GE
OUTPUT=LOWLIM
LOWLIM = LOW LIMIT
LIMIT
CHECK
OUTPUT
LT
HILIM-OUTPUT
LT
HILIM = HIGH LIMIT
GE
OUTPUT=HILIM
CHANGE
|DELT|-DELU1
GE
OUTPUT=CONTROL
CHUCK
LT
DELU1 = OUTPUT DEADBAND
C

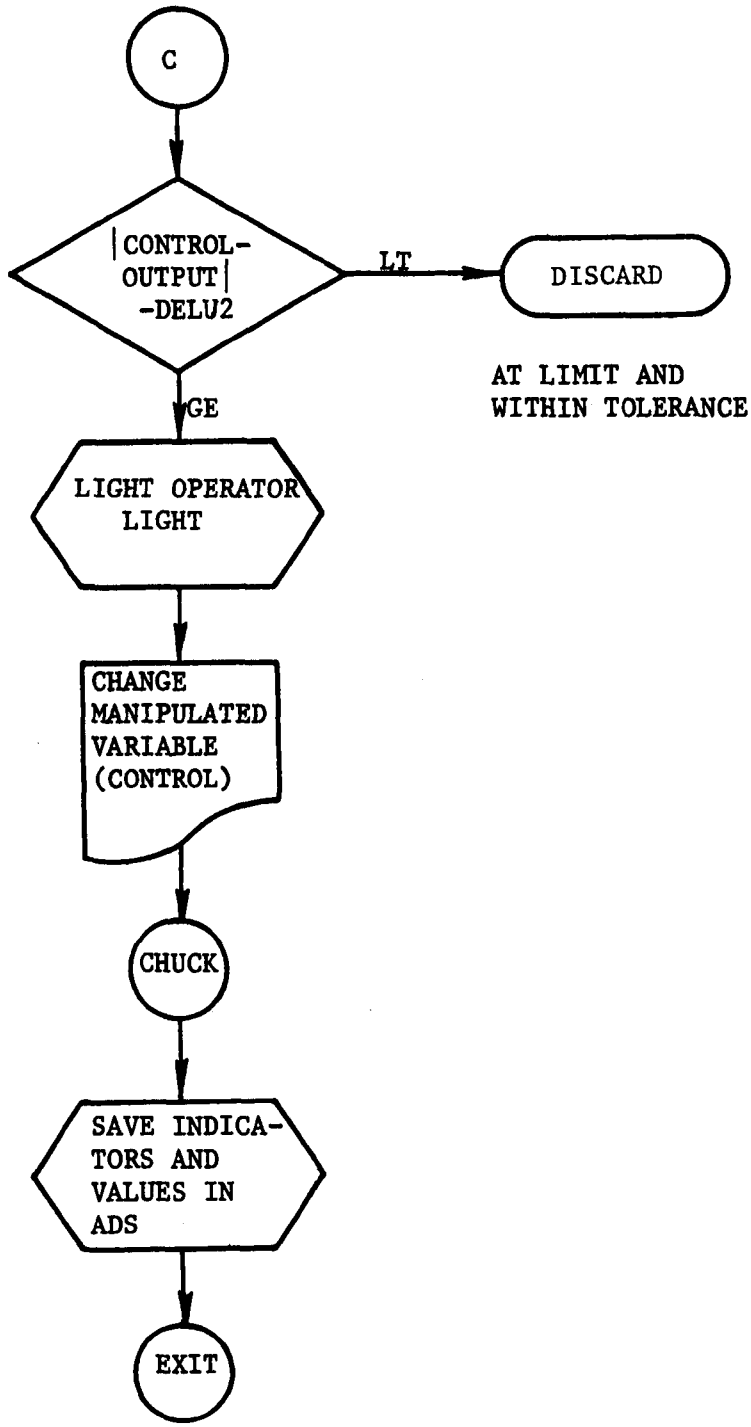
C
|CONTROL-
OUTPUT|
-DELU2
LT
DISCARD
AT LIMIT AND
WITHIN TOLERANCE
GE
LIGHT OPERATOR
LIGHT
CHANGE
MANIPULATED
VARIABLE
(CONTROL)
CHUCK
SAVE INDICA-
TORS AND
VALUES IN
ADS
EXIT

ASSOCIATED DATA STORAGE (ADS) DATA DEFINITION FOR DO AND MLSS CONTROL

ADS NUMBER	VARIABLE	DEFINITION
1	SETP	SETPOINT
2	GAIN	LOOP GAIN
3	K1	PROPORTIONAL GAIN
4	K2	INTEGRAL GAIN
5	K3	DERIVATIVE GAIN
6	TIME	TIME SINCE LAST CHANGE
7	BN	FILTERED VALUE
8	BN1	PREVIOUS VALUE (n-1)
9	BN2	PREVIOUS VALUE (n-2)
10	BN3	PREVIOUS VALUE (n-3)
11	BN4	PREVIOUS VALUE (n-4)
12	BN5	PREVIOUS VALUE (n-5)
13	BN6	PREVIOUS VALUE (n-6)
14	BN7	PREVIOUS VALUE (n-7)
15	XDOT	DERIVATIVE OF BN
16	XDDOT	SECOND DERIVATIVE OF BN
17	OUTPUT	Δ OUTPUT
18	ALPHA	NONLINEAR GAINS
19	BETA	NONLINEAR GAINS
20	NOT USED	NONLINEAR GAINS

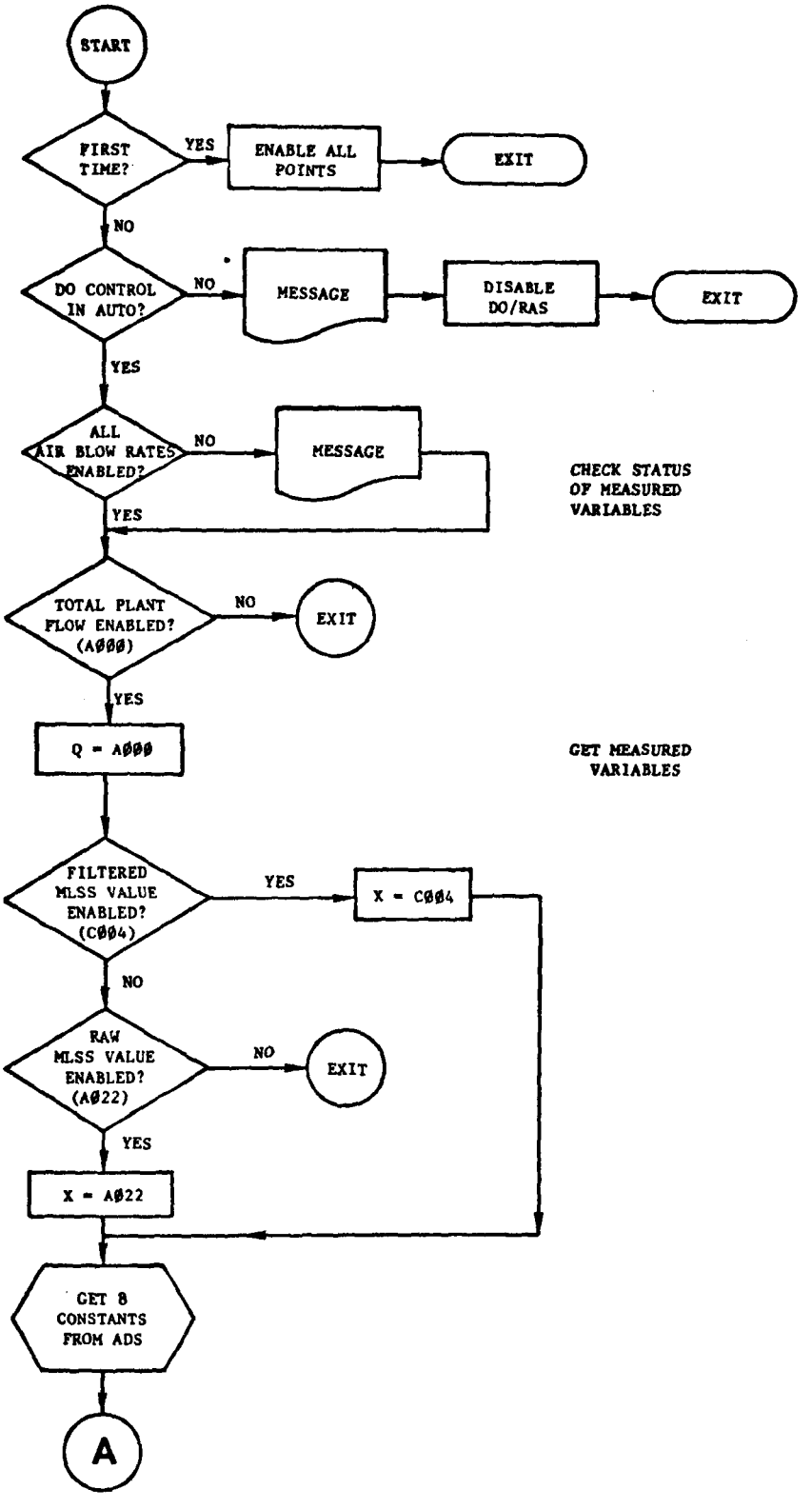

DO/RAS CONTROL FLOWCHART

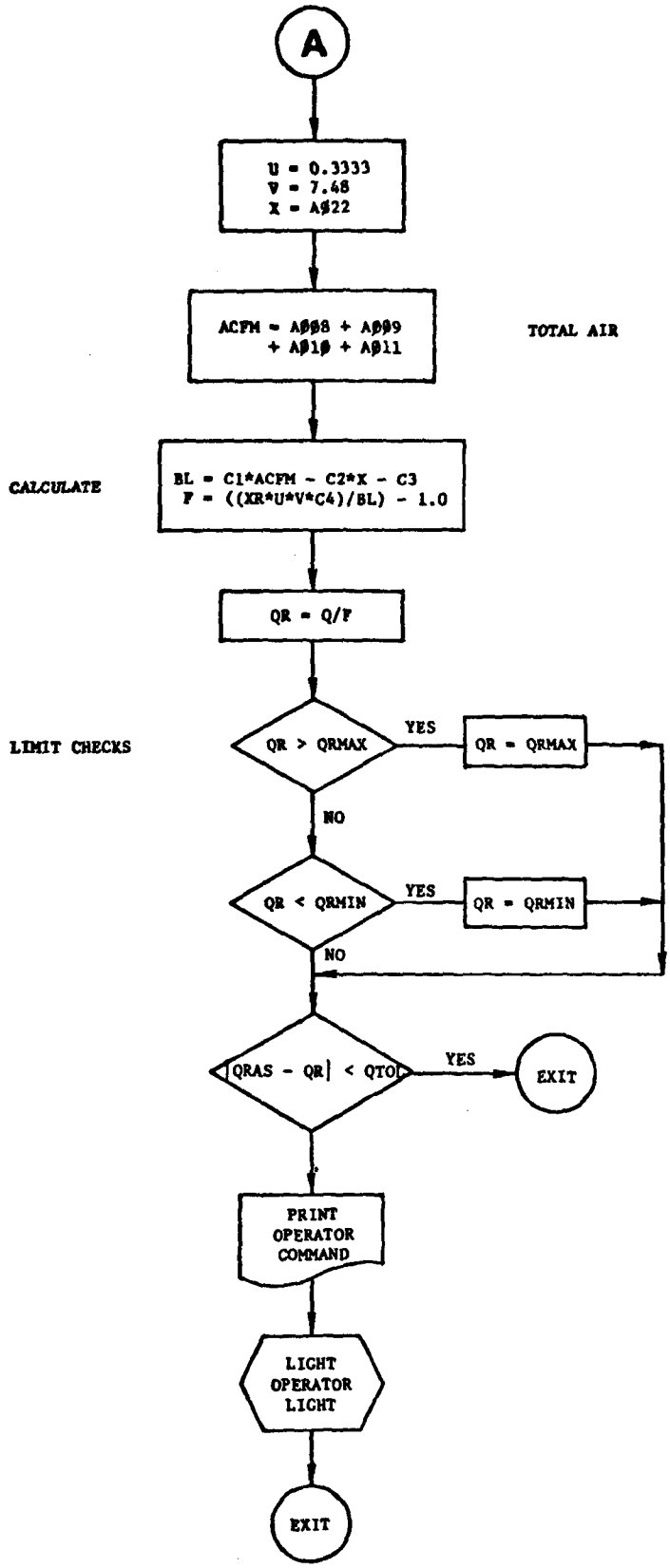
A
U = 0.3333
V = 7.48
X = A$22
ACFM = A$$8 + A$$9
+ A1 + A$11
TOTAL AIR
CALCULATE
BL = C1*ACFM - C2*X - C3
F = ((XR*U*V*C4)/BL) - 1.0
QR = Q/F
LIMIT CHECKS
QR > QRMAX
YES
QR = QRMAX
NO
QR < QRMIN
YES
QR = QRMIN
NO
|QRAS - QR| < QTOL
YES
EXIT
PRINT
OPERATOR
COMMAND
LIGHT
OPERATOR
LIGHT
EXIT

ASSOCIATED DATA STORAGE (ADS) DATA DEFINITION FOR DO/RAS CONTROL

ADS NUMBER	VARIABLE	DEFINITION
1	C1	GAIN TERMS
2	C2	GAIN TERMS
3	C3	GAIN TERMS
4	C4	GAIN TERMS
5	XR	SS IN RAS
6	QRMAX	HIGH LIMIT
7	QRMIN	LOW LIMIT
8	QTOL	DEADBAND
9-20	NOT USED	

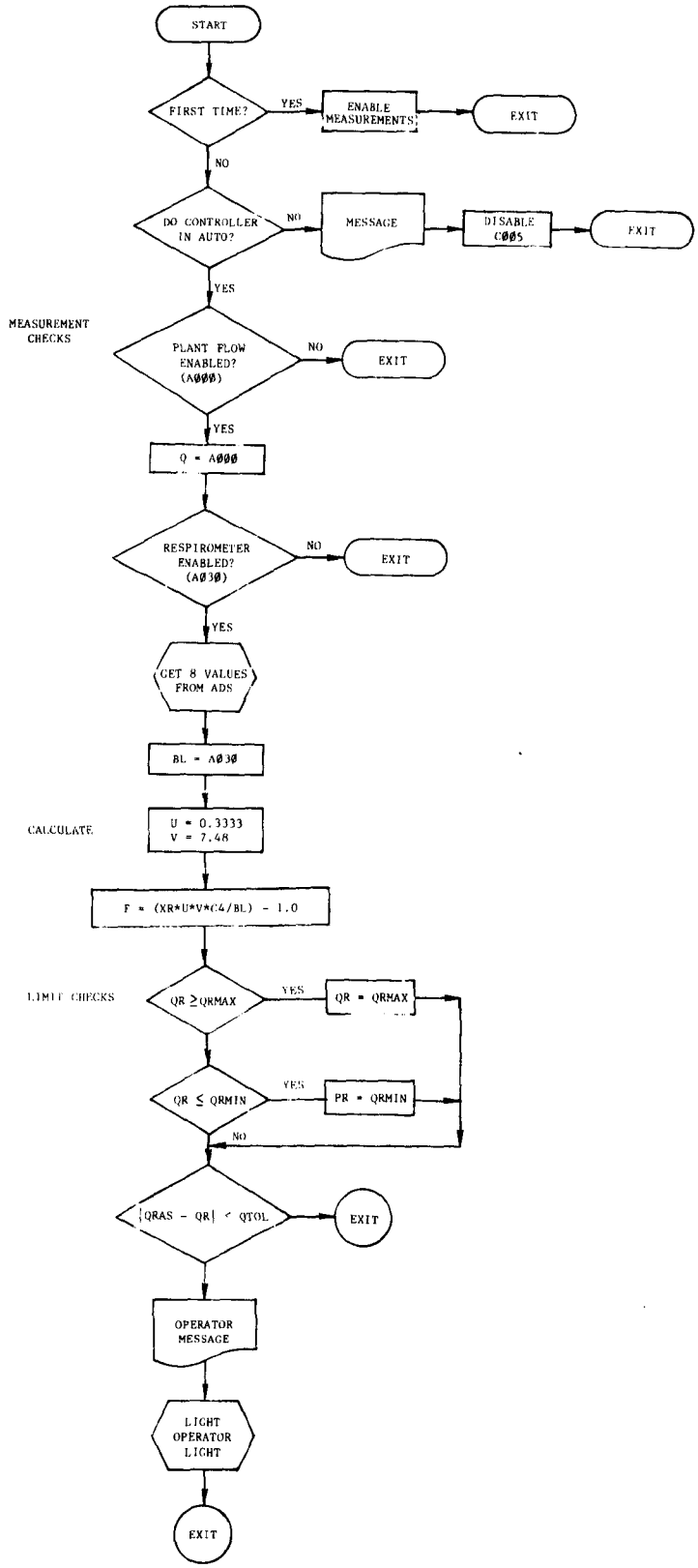

RESPIROMETER CONTROL FLOWCHART

APPENDIX B

DETAILS OF F/M RATIO CONTROLLERS ALGORITHM DESIGN

APPENDIX B

Details of F/M Ratio Controllers Algorithm Design

B.1 STEADY STATE RAS FLOW TO MAINTAIN TO GIVEN MLSS CONCENTRATION.

A microorganism mass balance around the aerators

(Schematic in Figure B.1) yields

$$V_a \frac{dX_a}{dt} = Q_R X_R - \left(Q + Q_R + Q_W\right)X_a + \underbrace{Y\frac{dF}{dt} - K_d X_a V_a}_{\text{net microorganism growth in aerators}} \qquad (B.1)$$

In steady state

$$\frac{dX_a}{dt} = 0 \qquad (B.2)$$

and for no sludge build-up or depletion in the total secondary system

$$Q_W X_a = Y\frac{dF}{dt} - K_d\left(X_a V_a + X_c V_c\right) \qquad (B.3)$$

The right hand side of Equation B.3 is net cell growth in the total secondary plant volume. Using Equations B.3 and B.2 with B.1 yields

$$0 = Q_R\left(X_R - X_a\right) - QX_a + K_d X_c V_c \qquad (B.4)$$

and therefore

$$Q_R = \frac{Q\left[1 - \left[\frac{K_d X_c V_c}{QX_a}\right]\right]}{\frac{X_R}{X_a} - 1} \qquad (B.5)$$

The quantity $K_d X_c V_c/(QX_a)$ is much less than 1.0 (about .01 for Palo Alto) and can therefore be neglected; so that

$$Q_R = \frac{Q}{\frac{X_R}{X_a} - 1} \qquad (B.6)$$

B.2 RELATIONSHIP BETWEEN FOOD UPTAKE AND AIR CONSUMPTION IN SECONDARY TREATMENT.

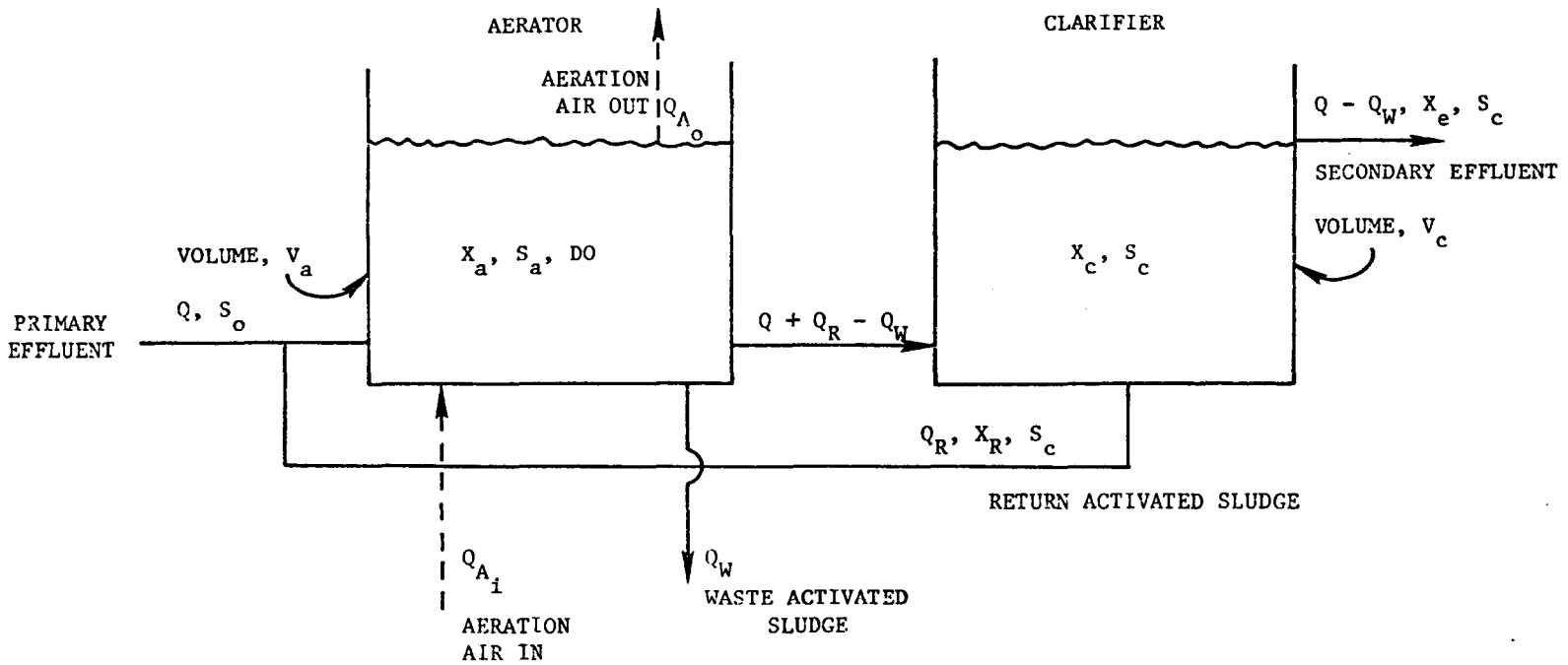

FIGURE B.1. ACTIVATED SLUDGE PROCESS SCHEMATIC

An oxygen mass balance for biological respiration in the aerators yields

$$Q_{O_2} = [1 - YyL] \frac{dF}{dt} + yLK_d\bar{X} \left(V_a + V_c\right) \tag{B.7}$$

where L is the fraction of original BOD_5 demand remaining in the bio mass after cell synthesis, y is the BOD_5 mass demand per unit mass of microorganism cells, and Y is mass yield of microorganisms per unit mass of food consumed. A microorganism mass balance around the entire secondary system is

$$\left(V_a + V_c\right) \frac{d\bar{X}}{dt} = Y\frac{dF}{dt} - K_d\bar{X} \left(V_a + V_c\right) - \left(Q_W X_a + QX_e\right) \tag{B.8}$$

where $\bar{X}$ is the average microorganism density, in the entire secondary system. Since the wasting rate policy is

$$Q_W = \frac{\left(V_a + V_c\right)}{\theta_c} - \frac{QX_c}{X_a} \tag{B.9}$$

Equation B.8 can be rewritten

$$\frac{d\bar{X}}{dt} = \frac{Y}{V_a + V_c} \frac{dF}{dt} - K_d\bar{X} - \frac{X_a}{\theta_c} \tag{B.10}$$

On average, whatever control policy is followed, $\bar{X} \approx X_a$, so Equation B.10 becomes

$$\frac{d\bar{X}}{dt} = - \left(K_d + \frac{1}{\theta_c}\right)\bar{X} + \left(\frac{Y}{V_a + V_c}\right) \frac{dF}{df} \tag{B.11}$$

Then, substituting for $K_d\bar{X}$ from Equation B.11 into Equation B.7 yields

$$Q_{O_2} = \frac{dF}{dt} - \left(V_a + V_c\right) yL \left[\frac{X}{\theta_c} + \frac{d\bar{X}}{dt}\right] \tag{B.12}$$

For a diurnal variation in dF/(dt) with a constant part, $d\bar{F}/(dt)$, and a dominant varying component that is sinusoidal, 1/2 $d\bar{F}/(dt)$ sin ωt, driving Equation B.11, then in the steady state

$$\frac{\bar{X}}{\theta_c} + \frac{d\bar{X}}{dt} = \frac{Y}{\left(V_a + V_C\right)} \frac{dF}{dt} \left[1-b + \frac{1}{2} \left[\left[\left(1- \frac{b}{a}\right)^2 - \left(\frac{b\tau\omega}{a}\right)^2\right]^{\frac{1}{2}} \cdot \right.\right. \tag{B.13}$$

$$\cdot \sin\left[\omega t + \tan^{-1}\left(\frac{b\tau\omega}{a - b}\right)\right]\Bigg]\Bigg]$$

where $a = \left(\tau^2\omega^2 + 1\right)^{\frac{1}{2}}$ (a)

$b = \tau K_d$ (b) (B.14)

$\tau = \dfrac{\theta_c}{K_d\theta_c + 1}$ (c)

For typical operating conditions:

$$\theta_c = 10 \text{ days}, \; K_d = 0.05 \text{ days}^{-1}, \; \omega = \frac{1}{2\pi} \text{ days}^{-1}$$

the ratio of the constant part of Equation B.13 to the amplitude of the sinusoidal part is about 2 to 1. Therefore, a simplification of Equation B.13 can be made such that

$$\frac{\overline{X}}{\theta_c} + \frac{d\overline{X}}{dt} \approx \frac{Y}{V_a + V_c}\frac{dF}{dt} \tag{B.15}$$

and substitution of Equation B.15 into B.12 to give:

$$Q_{O_2} = \left[1 - YyL\left(\frac{1}{K_d\theta_c + 1}\right)\right]\frac{dF}{dt} \tag{B.16}$$

If a mass balance for air in the aerators is developed:

$$\frac{d\,DO}{dt} = Q_{A_i} - Q_{A_o} - Q_{O_2} \tag{B.17}$$

and an assumption made about the relationship between Q_{A_i} and Q_{A_o}

$$Q_{A_i} - Q_{A_o} = K_1\, Q_{A_2} + K_2 \tag{B.18}$$

then for a constant DO level (i.e. d DO/(dt) = 0)

$$\frac{dF}{dt} = \frac{1}{1 - \dfrac{YyL}{K_d\theta_c + 1}}\left[K_1\, Q_{A_i} + K_2\right] \tag{B.19}$$

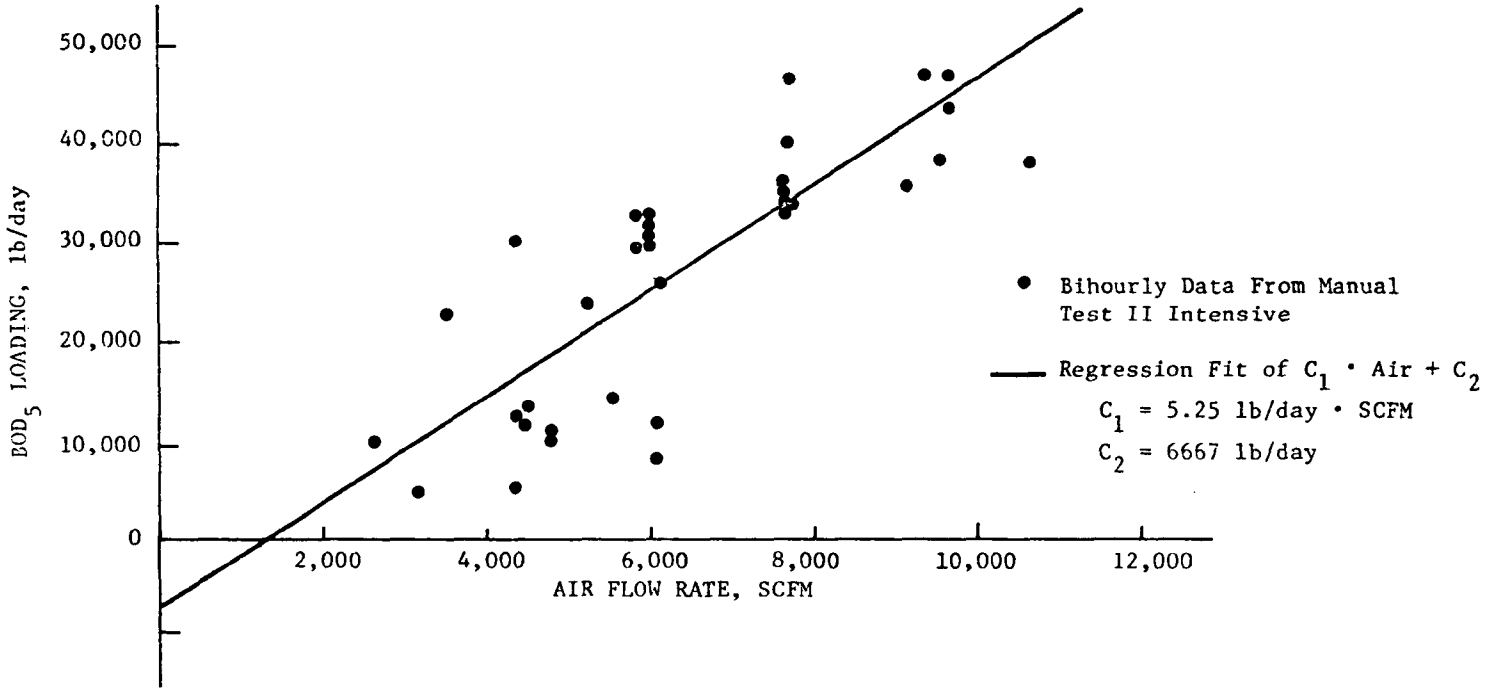

FIGURE B.2. REGRESSION CORRELATION OF SECONDARY TREATMENT BOD_5 LOADING AND AERATION AIR FLOW

The constants K_1 and K_2 relate the amount of air required to put a given quantity of oxygen into solution. Since the relationship is a complex function of temperatures, flow rates, bubble size, and agitation; Equation B.19 is put into the form

$$\frac{dF}{dt} = c_1 \, Q_{A_i} + C_2 \tag{B.20}$$

and c_1, c_2 are determined empirically by regression (see Figure B.2) with plant operating data. For Palo Alto in the conventional mode operation in the wet season

$$c_1 = 0.63 \, \frac{mg \cdot MGD}{l \cdot SCFM}$$

$$c_2 = -800 \, \frac{mg \cdot MGD}{l \cdot}$$

B.3 RELATIONSHIP BETWEEN FOOD UPTAKE AND SUBSTRATE LOAD IN SECONDARY TREATMENT

In section B.2, the relationship between food uptake, dF/(dt), and air use is developed. Substrate loading changes, QS_o, will not, in general, result in instantaneous uptake rates. The lag in uptake can be determined using a substrate mass balance for the aerators:

$$V_a \frac{dS_a}{dt} = QS_o - V_a \frac{dF}{dt} - (Q + Q_R) \, S_a + Q_R S_c \tag{B.21}$$

In general, S_a, substrate concentration in the aerators, is approximately the same as S_c, substrate concentration in the clarifier. From Reference [7], the relation between food uptake, dF/(dt), and substrate concentration is

$$\frac{dF}{dt} = \frac{KX_a S_a}{K_s + S_a} \tag{B.22}$$

so that Equation B.21 becomes

$$\frac{dS_a}{dt} = - \left[\frac{KX_a}{K_s + S_a} + \frac{Q}{V_a} \right] S_a + QS_o \tag{B.23}$$

S_a for proper operation is always much less than K_s so that the time constant, τ_{S_a}, for S_a changes in the aerator is

$$\tau_{S_a} = \frac{1}{\frac{KX_a}{K_s + S_a} + \frac{Q}{V_a}} \tag{B.24}$$

For Palo Alto, realistic values for parameters of Equation B.24 are: $K = 10$ days^{-1}, $K_s = 100$ mg/l, $X_a = 1200$ mg/l, $S_a \approx 10$ mg/l, $Q = 30$ MGD (0.11 Mm^3/day) and $V_a = 7.2$ MG (0.027 Mm^3). Therefore, $\tau_{S_a} \approx 10$ minutes which means that the time lag between substrate load and uptake is short enough to be neglected.

Thus, $dS_a/(dt)$ can be assumed zero in Equation B.21 yielding

$$Q(S_o = S_a) = \frac{1}{V_a}\frac{dF}{dt} \tag{B.25}$$

and since S_a is a constant fraction, f, of S_o for a given removal efficiency

$$Q\, S_o(1 - f) = \frac{1}{V_a}\frac{dF}{dt} \tag{B.26}$$

Loading, QS_o, is thus directly proportional to food uptake, $dF/(dt)$; which, in turn, as shown in section B.2, is a function of air use in the aerators.

B.4 AVERAGE FOOD UPTAKE TO MICROORGANISM RATIO AS A FUNCTION OF MEAN CELL RESIDENCE TIME

Average F/M ratio, U, is defined

$$U = \frac{\frac{dF}{dt}}{V_a\, \bar{X}_a f_v} \tag{B.27}$$

Using the long term average of Equation B.11 (i.e. $d\bar{X}/(dt) = 0$) and the fact that $\bar{X}_a \approx \bar{X}$ then

$$U = \frac{\left(K_d + \frac{1}{\theta_c}\right)\left(V_a + V_c\right)}{Y\quad V_a\, f_v} \tag{B.28}$$

B.5 RELATIONSHIP OF RESPIROMETER MEASUREMENT TO FEED UPTAKE

A mass balance on oxygen in the closed sampling system of the respirometer shown schematically in Figure B.3 is:

$$R = (1 - YyL)\left(\frac{1}{V_R}\frac{dF}{dt} + K_d X_i\right) + LyK_d X_n \tag{B.29}$$

when X_i is the initial microorganism mass concentration and X_n is the concentration of new microorganism synthesis once the sampling period begins. Respiration rate, R, is measured in the instrument by the pressure drop as oxygen is consumed in respiration and any carbon dioxide produced is removed by the soda lime scrubber.

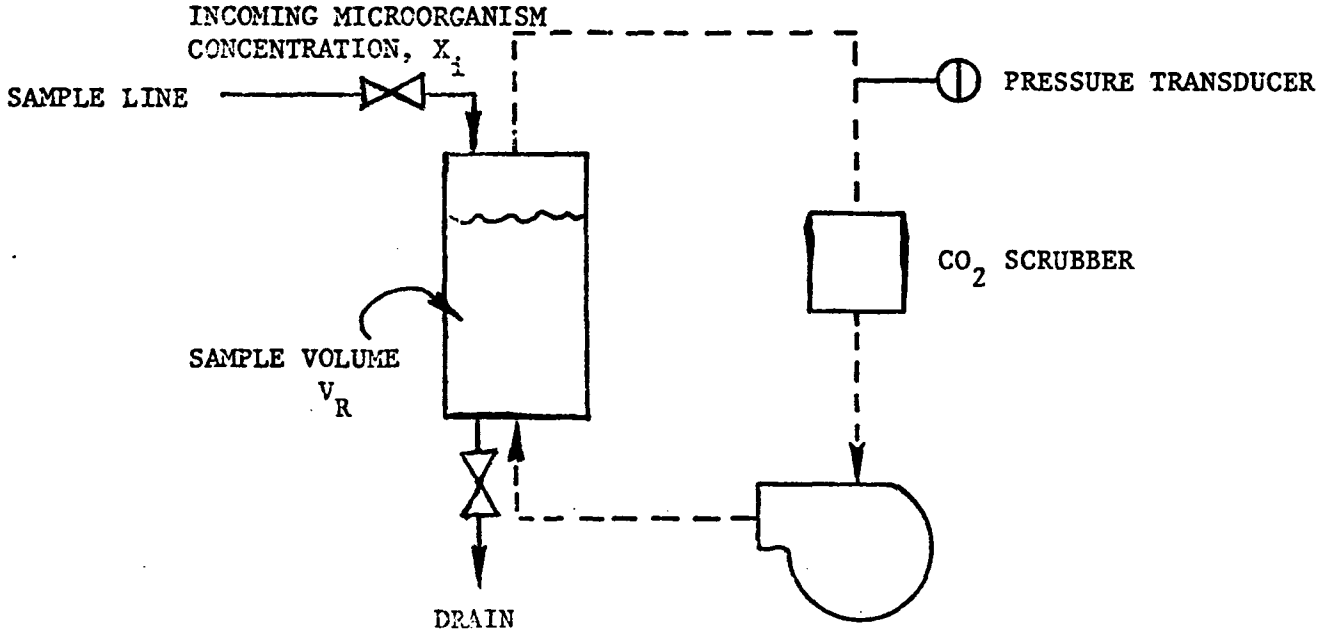

Sample System Loaded and Operated
for Sample Time, T.

FIGURE B.3. RESPIROMETER SCHEMATIC

Microorganism mass balances are

$$\frac{dX_i}{dt} = - K_d X_i \tag{B.30}$$

for the original cells and

$$\frac{dX_n}{dt} = Y\left(\frac{dF}{dt} + K_d X_i\right) - K_d X_n \tag{B.31}$$

for the new calls. If dF/(dt) is assumed constant for the sampling period, solutions to Equations B.30 and B.31 are

$$X_i = X_{i_o} e^{-K_d t} \tag{B.32}$$

and

$$X_n = \frac{Y}{K_d V_R}\frac{dF}{dt}\left(1 - e^{-K_d t}\right) + YK_d X_{i_o} t e^{-K_d t} \tag{B.33}$$

Substituting Equation B.32 and B.33 into B.29 and integrating for the sample period T yields:

$$\int_o^T = RT = \frac{dF}{dt}\left[T - \left(1 - e^{-K_d T}\right)\frac{LyY}{K_d}\right] + V_R X_{i_o}\left[\left(1 - e^{-K_d T}\right) - LyYK_d T e^{-K_d T}\right] \tag{B.34}$$

With the simplification, 1 - x, for the exponential e^{-x} with x small

$$\left(K_d T = \left(\frac{.05}{24}\ hr^{-1}\right)\left(\frac{3}{4}\ hr\right) = 0.00156\right)$$

$$R = \frac{dF}{dt}\left[1 - LyY\right] + K_d V_R X_{i_o}\left[1 - LyYK_d T\right] \tag{B.35}$$

or since $LyYK_d T << 1$

$$\frac{dF}{dt} = \frac{R - K_d V_R X_{i_o}}{1 - LyY} \tag{B.36}$$

APPENDIX C

SUMMARY OF COMPUTER OUTPUT*

*Adjusted for uniform plant conditions.

APPENDIX C.1

MANUAL-I DATA

JULY 9 1973 TO AUG 7 1973 PROCESS DATA SUMMARY MANUAL PLANT CONTROL

DESCRIPTION	AVE	MIN	MAX	STD	UNITS
TOTAL PLANT FLOW	24.06	5.59	36.48	4.53	MGD
LOS ALTOS FLOW	SENSOR NOT OPERABLE				
MT. VIEWFLOW	SENSOR NOT OPERABLE				
P H	7.92	6.69	8.24	0.27	
D O #1	0.04	0.0	0.15	0.07	MG/LITER
D O #2	0.13	0.0	1.27	0.15	MG/LITER
D O #3	0.99	0.57	3.66	0.35	MG/LITER
D O #4	1.58	0.00	5.07	1.31	MG/LITER
AIRFLOW #1	2000.56	960.13	3064.88	260.73	CFM
AIRFLOW #2	954.30	21.62	1684.69	199.47	CFM
AIRFLOW #3	2003.95	917.25	2940.63	252.70	CFM
AIRFLOW #4	2094.80	1053.31	2893.50	288.13	CFM
TH #1 FLOW	25.10	0.0	60.84	20.54	GPM
TH #1 DENSITY	5.01	0.40	5.19	0.16	PERCENT
TH #2 FLOW	13.24	0.0	61.06	17.89	GPM
TH #2 DENSITY	4.82	4.82	4.82	0.04	PERCENT
TH #3 FLOW	5.32	0.0	57.69	12.45	GPM
TH #3 DENSITY	2.82	0.0	6.16	2.40	PERCENT
TH #4 FLOW	23.69	0.0	61.05	20.37	GPM
TH #4 DENSITY	4.85	4.85	4.86	0.04	PERCENT
RAS FLOW	8.88	6.96	25.34	3.29	MGD
WAS FLOW	2.43	0.52	3.12	0.27	MGD
MLSS	1699.72	321.41	2692.38	386.00	MG/LITER
SLUDGE BLANKET	0.0	0.0	0.0	0.0	FT
CHLORINE #1 RESIDUAL	0.0	0.0	0.0	0.0	MG/LITER
CHLORINE FLOW #1	0.0	0.0	0.0	0.0	LB/DAY
CHLORINE FLOW #2	0.0	0.0	0.0	0.0	LB/DAY
CHLORINE FLOW #3	0.0	0.0	0.0	0.0	LB/DAY
CHLORINE #2 RESIDUAL	0.0	0.0	0.0	0.0	MG/LITER
SULFUR DIOXIDE FLOW	0.0	0.0	0.0	0.0	LB/DAY
SPARE	0.0	0.0	0.0	0.0	
SPARE	NO VALID DATA				

JULY 9 1973 TO AUG 7 1973 LOADING DATA SUMMARY MANUAL PLANT CONTROL

	SS(LBS)		BOD(LBS)		TOC(LBS)		COD(LBS)	
	%REMOVED	EFFLUENT	%REMOVED	EFFLUENT	%REMOVED	EFFLUENT	%REMOVED	EFFLUENT
JULY 9 1973	74.8 %	5475.	100.0 %	0.	55.9 %	8800.	67.5 %	19555.
JULY 10 1973	73.6 %	7755.	86.7 %	4408.	64.4 %	6531.	68.6 %	16940.
JULY 11 1973	85.3 %	5775.	87.6 %	4208.	66.1 %	7838.	71.6 %	18976.
JULY 12 1973	84.6 %	5441.	88.3 %	4111.	76.2 %	7254.	75.0 %	16322.
JULY 13 1973	81.9 %	6611.	94.6 %	1683.	68.8 %	6010.	73.1 %	15625.
JULY 14 1973	75.4 %	5821.	82.9 %	3929.	64.0 %	5821.	70.2 %	13643.
JULY 15 1973	81.2 %	3832.	83.8 %	3553.	64.9 %	5922.	75.9 %	9927.
JULY 16 1973	90.9 %	3640.	91.9 %	2548.	63.9 %	7886.	79.1 %	12941.
JULY 17 1973	86.9 %	3920.	90.6 %	3837.	61.0 %	9490.	80.0 %	14854.
JULY 18 1973	83.7 %	5607.	91.2 %	3536.	67.9 %	8194.	83.3 %	14721.
JULY 19 1973	75.8 %	5964.	86.3 %	5676.	52.2 %	8844.	85.8 %	20772.
JULY 20 1973	70.5 %	8711.	87.2 %	4717.	67.0 %	7649.	73.0 %	19122.
JULY 21 1973	68.6 %	8469.	81.6 %	5428.	59.6 %	7314.	68.5 %	17901.
JULY 22 1973	60.3 %	8771.	85.0 %	3782.	52.5 %	8588.	66.4 %	15350.
JULY 23 1973	77.9 %	7187.	91.4 %	3044.	63.8 %	8879.	76.3 %	14798.
JULY 24 1973	78.3 %	7446.	85.1 %	3971.	72.3 %	8894.	75.7 %	17375.
JULY 25 1973	72.7 %	8392.	83.7 %	4196.	57.8 %	9790.	74.9 %	17782.
JULY 26 1973	78.9 %	6235.	83.3 %	4345.	63.1 %	9655.	73.6 %	17901.
JULY 27 1973	81.1 %	7415.	89.2 %	3305.	69.6 %	8051.	80.0 %	21822.
JULY 28 1973	80.6 %	6373.	88.3 %	2781.	68.8 %	6566.	72.0 %	17767.
JULY 29 1973	87.8 %	4119.	90.0 %	2042.	73.4 %	4478.	71.4 %	13791.
JULY 30 1973	80.6 %	6427.	81.9 %	3374.	72.0 %	7030.	77.4 %	15064.
JULY 31 1973	76.2 %	7736.	85.6 %	4764.	68.8 %	7125.	79.3 %	16287.
AUG 1 1973	73.8 %	11381.	86.9 %	5214.	83.8 %	8277.	74.2 %	19037.
AUG 2 1973	70.4 %	9466.	89.3 %	3786.	62.6 %	8414.	69.4 %	20193.
AUG 3 1973	80.6 %	10573.	87.9 %	4354.	59.0 %	9951.	73.8 %	18659.
AUG 4 1973	73.0 %	9290.	88.8 %	3470.	67.2 %	7537.	83.5 %	16651.
AUG 5 1973	84.2 %	7378.	89.6 %	3889.	72.1 %	7673.	79.0 %	16634.
AUG 6 1973	83.4 %	7161.	88.3 %	4982.	73.0 %	7854.	79.8 %	16880.
AUG 7 1973	74.5 %	9965.	87.1 %	4990.	71.5 %	8878.	75.5 %	20058.

JULY 9 1973 TO AUG 7 1973 LOADING DATA SUMMARY MANUAL PLANT CONTROL

	NH3(LBS)		NO2(LBS)		NO3(LBS)		PHOS(LBS)	
	%REMOVED	EFFLUENT	%REMOVED	EFFLUENT	%REMOVED	EFFLUENT	%REMOVED	EFFLUENT
JULY 9 1973	15.4 %	4850.	86.7 %	6.	95.7 %	12.	0.0 %	1056.
JULY 10 1973	20.8 %	7755.	97.6 %	2.	99.7 %	2.	-50.9 %	1694.
JULY 11 1973	-74.1 %	9157.	96.7 %	2.	99.7 %	2.	-94.4 %	1444.
JULY 12 1973	18.2 %	5803.	97.9 %	2.	99.6 %	2.	9.5 %	766.
JULY 13 1973	13.2 %	5288.	96.9 %	2.	99.5 %	2.	7.0 %	1062.
JULY 14 1973	0.0 %	4948.	85.3 %	2.	96.8 %	2.	-27.8 %	1255.
JULY 15 1973	-23.9 %	3971.	0.0 %	2.	0.0 %	2.	33.3 %	592.
JULY 16 1973	41.1 %	4529.	96.9 %	2.	99.5 %	2.	0.0 %	1092.
JULY 17 1973	2.6 %	6106.	97.8 %	2.	99.6 %	2.	-48.1 %	1589.
JULY 18 1973	10.8 %	6437.	96.6 %	2.	99.5 %	2.	-28.1 %	1377.
JULY 19 1973	5.0 %	6252.	97.8 %	2.	99.6 %	2.	-40.7 %	1563.
JULY 20 1973	16.7 %	6374.	87.8 %	2.	98.5 %	2.	-30.9 %	1530.
JULY 21 1973	6.7 %	5389.	0.0 %	2.	0.0 %	2.	-8.6 %	1213.
JULY 22 1973	-23.6 %	4970.	88.1 %	2.	97.1 %	2.	-56.0 %	713.
JULY 23 1973	16.7 %	5073.	91.5 %	2.	98.6 %	2.	9.1 %	1057.
JULY 24 1973	12.5 %	7239.	92.9 %	2.	99.0 %	2.	-26.7 %	1375.
JULY 25 1973	13.3 %	7193.	97.0 %	2.	99.3 %	2.	17.1 %	1409.
JULY 26 1973	3.0 %	7804.	97.4 %	2.	99.5 %	2.	-39.9 %	1452.
JULY 27 1973	-5.2 %	7246.	91.7 %	2.	98.5 %	2.	-14.7 %	1409.
JULY 28 1973	4.5 %	6180.	83.3 %	2.	96.6 %	2.	6.3 %	1031.
JULY 29 1973	-10.0 %	4925.	0.0 %	2.	0.0 %	2.	25.5 %	707.
JULY 30 1973	21.6 %	5825.	96.9 %	2.	99.5 %	2.	6.6 %	940.
JULY 31 1973	16.9 %	4988.	99.8 %	0.	100.0 %	0.	-32.2 %	1303.
AUG 1 1973	20.4 %	4614.	97.3 %	2.	99.5 %	2.	-23.3 %	1316.
AUG 2 1973	14.8 %	5469.	97.3 %	2.	99.1 %	2.	-14.5 %	1199.
AUG 3 1973	-5.0 %	8707.	94.8 %	2.	98.8 %	2.	-8.7 %	1275.
AUG 4 1973	-27.7 %	7274.	58.3 %	2.	92.9 %	2.	-23.7 %	1060.
AUG 5 1973	-6.6 %	4568.	82.7 %	2.	96.1 %	2.	2.7 %	885.
AUG 6 1973	24.0 %	4620.	95.8 %	2.	99.3 %	2.	6.1 %	1263.
AUG 7 1973	5.6 %	6954.	96.3 %	2.	99.4 %	2.	-41.2 %	1886.

JULY 9 1973 TO AUG 7 1973 PLANT AIR CONSUMPTION MANUAL PLANT CONTROL

AIRFLOWS IN CUBIC FEET ASSUMED COST - $.000095/CF

	AIRFLOW#1	AIRFLOW#2	AIRFLOW#3	AIRFLOW#4	TOTAL	COST
JULY 9 1973	2652753.	1339943.	2804291.	3232977.	10029964.	$ 952.85
JULY 10 1973	2706295.	1395984.	2869241.	3285297.	10256817.	$ 974.40
JULY 11 1973	2413933.	1102778.	2521453.	2998325.	9036489.	$ 858.47
JULY 12 1973	2727619.	1380698.	2863347.	3255660.	10227324.	$ 971.60
JULY 13 1973	2724681.	1378603.	2865183.	3254859.	10223326.	$ 971.22
JULY 14 1973	2750203.	1394967.	2850313.	3192407.	10187890.	$ 967.85
JULY 15 1973	2727329.	1451949.	2795265.	3096833.	10071376.	$ 956.78
JULY 16 1973	2763581.	1160880.	2807237.	3276585.	10008283.	$ 950.79
JULY 17 1973	2930311.	1544034.	2987671.	2776055.	10238071.	$ 972.62
JULY 18 1973	2806847.	1573373.	2831971.	2969141.	10181332.	$ 967.23
JULY 19 1973	2776771.	1677903.	2641155.	3169867.	10265696.	$ 975.24
JULY 20 1973	2829813.	1338812.	2700923.	3321679.	10191227.	$ 968.17
JULY 21 1973	2838729.	1430872.	2723517.	2939643.	9932761.	$ 943.61
JULY 22 1973	2945117.	1607674.	2846639.	2832617.	10232047.	$ 972.04
JULY 23 1973	2942641.	1493985.	2811275.	2928497.	10176398.	$ 966.76
JULY 24 1973	2997731.	1513004.	2851547.	2963329.	10325611.	$ 980.93
JULY 25 1973	2942043.	1442067.	2777893.	2936967.	10098970.	$ 959.40
JULY 26 1973	2954511.	1411051.	2762645.	2945785.	10073992.	$ 957.03
JULY 27 1973	3033717.	1514040.	2855447.	2991393.	10394597.	$ 987.49
JULY 28 1973	2988915.	1579331.	2843795.	2844743.	10256784.	$ 974.39
JULY 29 1973	2846761.	1568572.	2851751.	2885747.	10152831.	$ 964.52
JULY 30 1973	2865529.	1457704.	3033419.	2905177.	10261829.	$ 974.87
JULY 31 1973	3013675.	1173467.	3105067.	2840401.	10132610.	$ 962.60
AUG 1 1973	3030785.	1245846.	3105115.	2811421.	10193167.	$ 968.35
AUG 2 1973	3033989.	1229986.	3077407.	2848349.	10189731.	$ 968.02
AUG 3 1973	3011375.	1133828.	3047875.	2938947.	10132025.	$ 962.54
AUG 4 1973	2994489.	1155212.	3038314.	2877211.	10065226.	$ 956.20
AUG 5 1973	3276707.	1291274.	3349701.	3187881.	11105563.	$ 1055.03
AUG 6 1973	3052575.	1099029.	3112945.	3031857.	10296406.	$ 978.16
AUG 7 1973	3035107.	1078834.	3063431.	3018227.	10195599.	$ 968.58
TOTAL	86614336.	41165568.	86795648.	90557712.	305133312.	$ 28987.66

JULY 9 1973 TO AUG 7 1973 MONTHLY EFFICIENCY SUMMARY MANUAL PLANT CONTROL

	PRIMARY		SECONDARY		CHLORINATOR	
	AVE	STD	AVE	STD	AVE	STD
SS	51.4 %	11.6 %	73.9 %	8.9 %	78.2 %	6.5 %
BOD5	22.9 %	12.0 %	87.6 %	2.9 %	87.4 %	3.3 %
TOC	26.1 %	13.1 %	65.3 %	8.3 %	66.1 %	7.0 %
COD	33.6 %	10.9 %	75.5 %	4.4 %	75.1 %	4.9 %

JULY 9 1973 TO AUG 7 1973 RESPIRATION SUMMARY MANUAL PLANT CONTROL

UNITS - LBS LOADING / 1000 CUBIC FEET OF AERATOR TANKAGE

	SS	BOD	TOC	COD
AVE	21.88	34.05	23.92	62.92
STD	4.72	8.08	4.20	9.48

APPENDIX C.2

DO DATA

AUG 12 1973 TO SEPT 11 1973 PROCESS DATA SUMMARY AUTOMATIC PLANT CONTROL

DESCRIPTION	AVE	MIN	MAX	STD	UNITS
TOTAL PLANT FLOW	23.57	13.05	37.65	4.59	MGD
LOS ALTOS FLOW	SENSOR NOT OPERABLE				
MT. VIEWFLOW	SENSOR NOT OPERABLE				
P H	7.28	6.61	8.11	0.15	
D O #1	0.99	0.01	4.84	0.54	MG/LITER
D O #2	1.01	0.10	5.09	0.56	MG/LITER
D O #3	0.34	0.0	3.04	0.34	MG/LITER
D O #4	1.13	0.05	5.01	0.59	MG/LITER
AIRFLOW #1	2208.38	315.20	3603.63	517.16	CFM
AIRFLOW #2	1125.60	4.29	3025.75	511.94	CFM
AIRFLOW #3	2280.35	181.37	3668.88	534.67	CFM
AIRFLOW #4	1569.53	402.25	3102.25	446.15	CFM
TH #1 FLOW	1.12	0.0	60.36	2.38	GPM
TH #1 DENSITY	5.45	0.43	5.64	0.19	PERCENT
TH #2 FLOW	25.75	0.0	61.06	12.06	GPM
TH #2 DENSITY	5.41	0.0	7.35	0.58	PERCENT
TH #3 FLOW	29.98	0.0	60.73	12.88	GPM
TH #3 DENSITY	2.76	0.0	8.94	2.09	PERCENT
TH #4 FLOW	0.97	0.0	60.71	7.50	GPM
TH #4 DENSITY	5.71	0.0	5.92	0.74	PERCENT
RAS FLOW	8.67	1.60	18.57	1.19	MGD
WAS FLOW	1.72	0.41	2.83	0.26	MGD
MLSS	1273.17	896.00	2020.06	196.10	MG/LITER
SLUDGE BLANKET	425.67	3.70	2214.25	559.73	FT
CHLORINE #1 RESIDUAL	0.0	0.0	0.0	0.0	MG/LITER
CHLORINE FLOW #1	0.0	0.0	0.0	0.0	LB/DAY
CHLORINE FLOW #2	0.0	0.0	0.0	0.0	LB/DAY
CHLORINE FLOW #3	0.0	0.0	0.0	0.0	LB/DAY
CHLORINE #2 RESIDUAL	0.0	0.0	0.0	0.0	MG/LITER
SULFUR DIOXIDE FLOW	0.39	0.0	13.54	1.52	LB/DAY
SPARE	0.0	0.0	0.0	0.0	
SPARE	NO VALID DATA				

AUG 12 1973 TO SEPT 11 1973 LOADING DATA SUMMARY AUTOMATIC PLANT CONTROL

	SS(LBS)		BOD(LBS)		TOC(LBS)		COD(LBS)	
	%REMOVED	EFFLUENT	%REMOVED	EFFLUENT	%REMOVED	EFFLUENT	%REMOVED	EFFLUENT
AUG 12 1973	78.6 %	6612.	87.6 %	2534.	61.9 %	6795.	72.9 %	17080.
AUG 13 1973	79.0 %	5440.	76.8 %	4519.	67.3 %	6695.	76.9 %	17994.
AUG 14 1973	79.7 %	5921.	84.5 %	4313.	66.7 %	6766.	74.4 %	19665.
AUG 15 1973	73.1 %	7560.	85.2 %	3260.	73.3 %	5434.	71.6 %	17955.
AUG 16 1973	70.5 %	6599.	75.6 %	11240.	56.8 %	6812.	77.6 %	16391.
AUG 17 1973	82.5 %	4409.	90.5 %	4199.	65.6 %	6718.	78.1 %	14695.
AUG 18 1973	84.2 %	4339.	81.7 %	7358.	73.7 %	4905.	78.9 %	13206.
AUG 19 1973	84.5 %	3909.	81.5 %	2985.	65.9 %	4975.	74.8 %	11905.
AUG 20 1973	77.5 %	5865.	87.0 %	2912.	75.3 %	4652.	76.6 %	13753.
AUG 21 1973	81.5 %	5030.	92.6 %	3353.	68.4 %	6287.	76.2 %	15718.
AUG 22 1973	73.1 %	7522.	88.2 %	6519.	67.0 %	6477.	75.2 %	15880.
AUG 23 1973	60.9 %	8782.	86.6 %	4779.	62.8 %	7148.	66.2 %	19197.
AUG 24 1973	68.4 %	7454.	86.0 %	6527.	56.5 %	8059.	67.3 %	18334.
AUG 25 1973	77.6 %	5992.	87.8 %	5505.	68.9 %	6179.	65.1 %	21720.
AUG 26 1973	72.1 %	5469.	79.2 %	8680.	63.6 %	5646.	72.1 %	12879.
AUG 27 1973	96.1 %	1238.	78.7 %	10525.	70.0 %	8048.	89.7 %	7636.
AUG 28 1973	83.2 %	3538.	87.2 %	6132.	58.3 %	7862.	73.2 %	15527.
AUG 29 1973	63.9 %	8601.	90.1 %	4920.	64.8 %	7601.	71.4 %	17802.
AUG 30 1973	63.8 %	9359.	84.3 %	5737.	61.8 %	7935.	71.2 %	20956.
AUG 31 1973	80.9 %	5866.	90.4 %	3034.	68.4 %	7484.	72.2 %	18408.
SEPT 1 1973	66.2 %	8385.	82.3 %	5974.	44.9 %	7512.	68.9 %	18867.
SEPT 2 1973	74.6 %	4931.	75.8 %	7039.	60.8 %	5271.	76.2 %	13092.
SEPT 3 1973	82.0 %	4962.	78.9 %	8110.	73.2 %	4449.	78.5 %	13175.
SEPT 4 1973	87.4 %	3568.	79.5 %	9038.	73.2 %	5946.	78.2 %	15460.
SEPT 5 1973	81.5 %	6224.	86.0 %	6721.	76.9 %	5809.	75.4 %	16389.
SEPT 6 1973	79.1 %	5864.	83.5 %	7400.	74.8 %	5864.	71.6 %	16782.
SEPT 7 1973	78.2 %	4471.	68.0 %	8780.	56.2 %	7927.	64.8 %	21341.
SEPT 8 1973	83.1 %	4140.	88.0 %	2794.	70.9 %	3967.	75.4 %	11385.
SEPT 9 1973	87.8 %	3163.	89.1 %	2704.	70.9 %	5515.	81.6 %	9938.
SEPT 10 1973	86.3 %	4572.	91.4 %	2547.	76.1 %	5792.	81.0 %	13286.
SEPT 11 1973	83.5 %	5118.	88.1 %	3771.	72.9 %	6371.	78.2 %	15563.

AUG 12 1973 TO SEPT 11 1973 LOADING DATA SUMMARY AUTOMATIC PLANT CONTROL

	NH3(LBS)		NO2(LBS)		NO3(LBS)		PHOS(LBS)	
	%REMOVED	EFFLUENT	%REMOVED	EFFLUENT	%REMOVED	EFFLUENT	%REMOVED	EFFLUENT
AUG 12 1973	-7.7 %	5142.	0.0 %	2.	0.0 %	2.	-15.0 %	997.
AUG 13 1973	2.7 %	7449.	72.2 %	2.	98.7 %	2.	19.3 %	1061.
AUG 14 1973	-5.3 %	7126.	98.2 %	2.	99.7 %	2.	-63.0 %	1237.
AUG 15 1973	-1.3 %	9096.	96.2 %	2.	99.6 %	2.	-43.6 %	1370.
AUG 16 1973	9.0 %	7770.	97.5 %	2.	99.4 %	2.	-6.3 %	1049.
AUG 17 1973	8.4 %	7116.	95.3 %	2.	99.5 %	2.	-9.2 %	1073.
AUG 18 1973	2.2 %	5754.	80.8 %	2.	88.1 %	2.	2.5 %	1170.
AUG 19 1973	-10.8 %	5117.	0.0 %	2.	0.0 %	2.	-17.2 %	1075.
AUG 20 1973	36.1 %	3944.	96.7 %	2.	99.6 %	2.	1.5 %	1345.
AUG 21 1973	1.6 %	7523.	96.2 %	2.	99.6 %	2.	0.4 %	1111.
AUG 22 1973	20.3 %	6582.	97.3 %	2.	99.6 %	2.	-52.3 %	1400.
AUG 23 1973	26.2 %	6331.	97.0 %	2.	99.5 %	2.	-42.9 %	1307.
AUG 24 1973	7.9 %	7092.	96.8 %	2.	99.4 %	2.	-10.4 %	1068.
AUG 25 1973	-5.0 %	6291.	0.0 %	2.	0.0 %	2.	-11.3 %	1198.
AUG 26 1973	1.1 %	6210.	0.0 %	2.	0.0 %	2.	-6.4 %	935.
AUG 27 1973	15.2 %	7037.	95.8 %	2.	99.6 %	2.	8.7 %	1131.
AUG 28 1973	11.6 %	5995.	96.4 %	2.	99.3 %	2.	-52.7 %	1356.
AUG 29 1973	14.7 %	6401.	97.2 %	2.	99.5 %	2.	-35.9 %	1500.
AUG 30 1973	16.9 %	6511.	96.9 %	2.	99.7 %	2.	-38.8 %	1310.
AUG 31 1973	25.7 %	5563.	97.3 %	2.	99.8 %	2.	-9.6 %	1153.
SEPT 1 1973	18.8 %	4891.	76.2 %	2.	96.4 %	2.	-40.0 %	1125.
SEPT 2 1973	0.0 %	2805.	0.0 %	2.	0.0 %	2.	-29.2 %	1075.
SEPT 3 1973	0.0 %	2823.	0.0 %	2.	0.0 %	2.	-5.1 %	1061.
SEPT 4 1973	20.0 %	4361.	90.9 %	2.	99.1 %	2.	-25.6 %	1284.
SEPT 5 1973	33.3 %	5394.	97.1 %	2.	99.5 %	2.	-43.0 %	1353.
SEPT 6 1973	13.9 %	6268.	96.8 %	2.	99.5 %	2.	-5.7 %	863.
SEPT 7 1973	6.1 %	6301.	78.2 %	25.	66.4 %	187.	-38.6 %	1189.
SEPT 8 1973	15.7 %	5089.	0.0 %	2.	0.0 %	2.	-30.3 %	1052.
SEPT 9 1973	-17.7 %	3814.	25.0 %	2.	93.0 %	2.	-33.2 %	1194.
SEPT 10 1973	22.3 %	4503.	94.0 %	3.	99.3 %	2.	-8.3 %	1334.
SEPT 11 1973	9.2 %	6075.	94.9 %	3.	99.7 %	2.	-45.8 %	1266.

AUG 12 1973 TO SEPT 11 1973 PLANT AIR CONSUMPTION AUTOMATIC PLANT CONTROL

AIRFLOWS IN CUBIC FEET ASSUMED COST - $.000095/CF

	AIRFLOW#1	AIRFLOW#2	AIRFLOW#3	AIRFLOW#4	TOTAL	COST
AUG 12 1973	2974167.	1193103.	3054780.	2757757.	9979807.	$ 948.08
AUG 13 1973	3068177.	1228392.	3137245.	2632067.	10065881.	$ 956.26
AUG 14 1973	3309731.	1370638.	3414091.	2454879.	10549339.	$ 1002.19
AUG 15 1973	3430249.	1383687.	3533688.	2408570.	10756194.	$ 1021.84
AUG 16 1973	3507795.	1508955.	3649445.	2387179.	11053374.	$ 1050.07
AUG 17 1973	3305319.	1390726.	3418813.	2236073.	10350931.	$ 983.34
AUG 18 1973	2922345.	1180451.	3011929.	1970498.	9085223.	$ 863.10
AUG 19 1973	2357687.	852135.	2436413.	1627886.	7274121.	$ 691.04
AUG 20 1973	2914215.	1187702.	2973303.	1955358.	9030578.	$ 857.90
AUG 21 1973	3276073.	1346496.	3365299.	2219603.	10207471.	$ 969.71
AUG 22 1973	3098700.	1216564.	3180275.	2123095.	9618634.	$ 913.77
AUG 23 1973	3014951.	1195162.	3092807.	2077042.	9379962.	$ 891.10
AUG 24 1973	3356597.	1388529.	3447277.	2265579.	10457982.	$ 993.51
AUG 25 1973	3188579.	1320872.	3296171.	2142173.	9947795.	$ 945.04
AUG 26 1973	2444831.	1192552.	2544513.	1684910.	7866806.	$ 747.35
AUG 27 1973	2936301.	1642584.	2985661.	1924833.	9489379.	$ 901.49
AUG 28 1973	3339000.	1803914.	3375713.	2084171.	10602798.	$ 1007.27
AUG 29 1973	3393561.	1832402.	3425005.	2127655.	10778623.	$ 1023.97
AUG 30 1973	3682953.	2039544.	3764160.	2299303.	11785960.	$ 1119.67
AUG 31 1973	4001785.	2186277.	4057007.	2452203.	12697272.	$ 1206.24
SEPT 1 1973	3243780.	1770578.	3349081.	1941840.	10305279.	$ 979.00
SEPT 2 1973	2371865.	1075528.	2484417.	1464660.	7396470.	$ 702.66
SEPT 3 1973	2427375.	1101258.	2535453.	1551255.	7615341.	$ 723.46
SEPT 4 1973	3102161.	1557895.	3245383.	2128367.	10033806.	$ 953.21
SEPT 5 1973	3676597.	2089570.	3902103.	3145081.	12813351.	$ 1217.27
SEPT 6 1973	3785629.	2032197.	3966399.	3304593.	13088818.	$ 1243.44
SEPT 7 1973	3730001.	2289099.	3906450.	3365717.	13291267.	$ 1262.67
SEPT 8 1973	3351973.	2386481.	3480167.	2564599.	11783220.	$ 1119.41
SEPT 9 1973	2506517.	1611614.	2592545.	1826472.	8537148.	$ 811.03
SEPT 10 1973	3281149.	2605057.	3414979.	2373963.	11675148.	$ 1109.14
SEPT 11 1973	3685737.	3168753.	3858093.	2628067.	13340650.	$ 1267.36
TOTAL	98685584.	50148608.	101898464.	70125248.	320857856.	$ 30481.52

AUG 12 1973 TO SEPT 11 1973 MONTHLY EFFICIENCY SUMMARY AUTOMATIC PLANT CONTROL

	PRIMARY		SECONDARY		CHLORINATOR	
	AVE	STD	AVE	STD	AVE	STD
SS	47.7 %	12.3 %	75.3 %	10.1 %	78.1 %	8.0 %
BOD5	25.8 %	17.5 %	88.3 %	4.8 %	84.6 %	5.8 %
TOC	20.0 %	7.9 %	67.8 %	5.9 %	66.7 %	7.3 %
COD	32.5 %	11.4 %	75.4 %	6.7 %	74.6 %	5.2 %

AUG 12 1973 TO SEPT 11 1973 RESPIRATION SUMMARY AUTOMATIC PLANT CONTROL

UNITS - LBS LOADING / 1000 CUBIC FEET OF AERATOR TANKAGE

	SS	BOD	TOC	COD
AVE	18.89	39.26	21.42	58.92
STD	3.86	15.81	3.09	12.44

APPENDIX C.3

MLSS DATA

SEPT 16 1973 TO OCT 16 1973 PROCESS DATA SUMMARY AUTOMATIC PLANT CONTROL

DESCRIPTION	AVE	MIN	MAX	STD	UNITS
TOTAL PLANT FLOW	25.95	4.86	48.62	4.69	MGD
LOS ALTOS FLOW	SENSOR NOT OPERABLE				
MT. VIEWFLOW	SENSOR NOT OPERABLE				
P H	7.25	6.16	8.54	0.20	
D O #1	1.01	0.10	3.15	0.38	MG/LITER
D O #2	1.02	0.10	5.11	0.39	MG/LITER
D O #3	0.53	0.10	2.70	0.31	MG/LITER
D O #4	1.76	0.47	5.00	0.83	MG/LITER
AIRFLOW #1	2626.91	531.41	3914.88	650.22	CFM
AIRFLOW #2	1585.56	24.42	3046.88	732.82	CFM
AIRFLOW #3	2730.44	306.81	4087.38	687.80	CFM
AIRFLOW #4	1927.09	619.41	3132.63	514.27	CFM
TH #1 FLOW	17.33	0.0	60.61	15.42	GPM
TH #1 DENSITY	4.83	0.0	10.17	2.74	PERCENT
TH #2 FLOW	11.89	0.0	60.77	12.95	GPM
TH #2 DENSITY	3.43	0.0	6.52	1.76	PERCENT
TH #3 FLOW	12.68	0.0	61.07	14.47	GPM
TH #3 DENSITY	NO VALID DATA				
TH #4 FLOW	0.40	0.0	48.48	3.45	GPM
TH #4 DENSITY	5.89	3.85	5.92	0.14	PERCENT
RAS FLOW	11.02	0.70	25.06	2.60	MGD
WAS FLOW	0.46	0.00	1.59	0.24	MGD
MLSS	1557.21	100.00	2052.00	196.27	MG/LITER
MLSS #2	1553.05	985.69	3026.25	184.73	MG/LITER
CHLORINE #1 RESIDUAL	0.0	0.0	0.0	0.0	MG/LITER
CHLORINE FLOW #1	449.67	0.0	2058.00	490.95	LB/DAY
CHLORINE FLOW #2	0.0	0.0	0.0	0.0	LB/DAY
CHLORINE FLOW #3	0.0	0.0	0.0	0.0	LB/DAY
CHLORINE #2 RESIDUAL	0.0	0.0	0.0	0.0	MG/LITER
SULFUR DIOXIDE FLOW	0.0	0.0	0.0	0.0	LB/DAY
SPARE	0.0	0.0	0.0	0.0	
SPARE	NO VALID DATA				

SEPT 16 1973 TO OCT 16 1973 LOADING DATA SUMMARY AUTOMATIC PLANT CONTROL

	SS(LBS)		BOD(LBS)		TOC(LBS)		COD(LBS)	
	%REMOVED	EFFLUENT	%REMOVED	EFFLUENT	%REMOVED	EFFLUENT	%REMOVED	EFFLUENT
SEPT 16 1973	84.5 %	3952.	82.2 %	4311.	60.6 %	6646.	72.8 %	15627.
SEPT 17 1973	79.2 %	6499.	86.8 %	3777.	55.9 %	9139.	73.7 %	16247.
SEPT 18 1973	76.2 %	6329.	90.9 %	2572.	57.0 %	9392.	73.3 %	15925.
SEPT 19 1973	73.7 %	6202.	86.0 %	4201.	55.1 %	8803.	81.4 %	11804.
SEPT 20 1973	65.8 %	12105.	88.4 %	3697.	53.3 %	10784.	78.7 %	18927.
SEPT 21 1973	69.5 %	7817.	88.2 %	5471.	64.0 %	8685.	74.8 %	19324.
SEPT 22 1973	80.9 %	5860.	86.0 %	4102.	56.4 %	6641.	75.5 %	15039.
SEPT 23 1973	79.0 %	5783.	92.9 %	2034.	67.8 %	5783.	69.2 %	14757.
SEPT 24 1973	77.4 %	5870.	81.1 %	6773.	67.7 %	7224.	69.9 %	17384.
SEPT 25 1973	82.7 %	5103.	86.6 %	5724.	46.1 %	9096.	74.5 %	18635.
SEPT 26 1973	78.4 %	5493.	88.7 %	5010.	59.8 %	8569.	100.0 %	0.
SEPT 27 1973	62.6 %	7415.	88.8 %	3795.	51.2 %	8941.	100.0 %	0.
SEPT 28 1973	71.3 %	7661.	87.5 %	4990.	62.0 %	6566.	100.0 %	0.
SEPT 29 1973	74.6 %	6627.	76.3 %	5592.	56.7 %	8077.	100.0 %	0.
SEPT 30 1973	72.6 %	4704.	80.7 %	6381.	65.0 %	5727.	100.0 %	0.
OCT 1 1973	74.8 %	5918.	77.3 %	6965.	69.1 %	6601.	100.0 %	0.
OCT 2 1973	73.8 %	7341.	79.7 %	9221.	53.2 %	8488.	80.8 %	17663.
OCT 3 1973	70.4 %	8947.	80.4 %	6711.	69.0 %	8053.	68.3 %	20803.
OCT 4 1973	76.6 %	7435.	88.5 %	5272.	69.5 %	6534.	75.0 %	18249.
OCT 5 1973	64.7 %	11881.	88.8 %	5111.	54.8 %	10536.	70.6 %	20399.
OCT 6 1973	67.7 %	10980.	88.2 %	5038.	62.4 %	8827.	69.8 %	19162.
OCT 7 1973	77.6 %	7313.	72.7 %	8908.	54.8 %	9307.	63.4 %	15733.
OCT 8 1973	78.2 %	8483.	80.7 %	7634.	53.0 %	11075.	72.4 %	20972.
OCT 9 1973	84.4 %	6525.	83.5 %	7830.	60.4 %	8389.	72.3 %	16778.
OCT 10 1973	67.2 %	9309.	91.9 %	2997.	62.7 %	9309.	70.0 %	17028.
OCT 11 1973	72.4 %	6537.	41.8 %	8655.	68.5 %	6537.	68.8 %	13524.
OCT 12 1973	80.5 %	4980.	84.3 %	2445.	71.0 %	4527.	52.4 %	19919.
OCT 13 1973	82.5 %	3841.	93.7 %	1536.	82.3 %	2987.	82.1 %	10028.
OCT 14 1973	89.5 %	2291.	94.5 %	926.	82.4 %	2189.	84.9 %	6414.
OCT 15 1973	75.0 %	8331.	90.2 %	3030.	69.8 %	6688.	75.5 %	18496.
OCT 16 1973	74.3 %	8385.	89.3 %	3311.	71.6 %	6544.	74.3 %	17003.

SEPT 16 1973 TO OCT 16 1973 LOADING DATA SUMMARY AUTOMATIC PLANT CONTROL

	NH3(LBS)		NO2(LBS)		NO3(LBS)		PHOS(LBS)	
	%REMOVED	EFFLUENT	%REMOVED	EFFLUENT	%REMOVED	EFFLUENT	%REMOVED	EFFLUENT
SEPT 16 1973	0.0 %	2964.	0.0 %	4.	0.0 %	2.	-11.2 %	1121.
SEPT 17 1973	15.1 %	4569.	88.5 %	6.	99.6 %	2.	-49.0 %	1507.
SEPT 18 1973	9.5 %	5819.	96.4 %	4.	99.7 %	2.	-33.9 %	1323.
SEPT 19 1973	22.2 %	6302.	94.4 %	6.	99.7 %	2.	-33.6 %	1240.
SEPT 20 1973	8.8 %	6823.	88.2 %	9.	99.7 %	2.	-41.5 %	1298.
SEPT 21 1973	22.2 %	6840.	97.8 %	2.	97.5 %	22.	-36.4 %	1303.
SEPT 22 1973	-8.0 %	5274.	94.4 %	2.	0.0 %	2.	-19.9 %	1250.
SEPT 23 1973	-2.4 %	4288.	80.0 %	2.	93.3 %	2.	-20.8 %	1206.
SEPT 24 1973	8.0 %	5193.	93.3 %	2.	99.6 %	2.	-32.7 %	1366.
SEPT 25 1973	5.5 %	5768.	95.1 %	9.	99.3 %	2.	-35.7 %	1298.
SEPT 26 1973	7.0 %	5823.	87.9 %	9.	99.5 %	2.	-19.7 %	1296.
SEPT 27 1973	4.4 %	6106.	98.2 %	7.	99.4 %	2.	-16.0 %	1204.
SEPT 28 1973	1.2 %	6938.	93.7 %	11.	98.9 %	2.	8.8 %	1357.
SEPT 29 1973	4.3 %	7808.	90.3 %	6.	96.0 %	2.	-18.1 %	1350.
SEPT 30 1973	14.9 %	4091.	77.8 %	4.	0.0 %	2.	-11.2 %	1121.
OCT 1 1973	3.8 %	5804.	93.0 %	7.	99.3 %	2.	-37.0 %	1332.
OCT 2 1973	1.8 %	8923.	97.1 %	5.	89.6 %	69.	18.3 %	1246.
OCT 3 1973	-3.6 %	8970.	91.8 %	9.	99.4 %	2.	-27.3 %	1521.
OCT 4 1973	-3.1 %	9057.	93.4 %	9.	99.6 %	2.	-26.8 %	1397.
OCT 5 1973	-8.9 %	6837.	91.2 %	7.	0.0 %	2.	1.6 %	1258.
OCT 6 1973	56.9 %	6674.	0.0 %	2.	0.0 %	2.	-7.8 %	1369.
OCT 7 1973	-32.4 %	5429.	0.0 %	2.	0.0 %	2.	-22.7 %	1330.
OCT 8 1973	14.9 %	4713.	75.0 %	7.	99.6 %	2.	-3.8 %	1173.
OCT 9 1973	20.9 %	6175.	98.6 %	2.	99.7 %	2.	-24.0 %	1181.
OCT 10 1973	5.3 %	8173.	91.8 %	9.	99.6 %	2.	-5.9 %	1305.
OCT 11 1973	16.3 %	7551.	94.9 %	7.	99.8 %	2.	-83.2 %	1330.
OCT 12 1973	-1.4 %	8035.	98.1 %	2.	93.6 %	18.	-5.2 %	1095.
OCT 13 1973	13.3 %	5548.	95.5 %	2.	94.1 %	11.	-11.1 %	1043.
OCT 14 1973	-21.1 %	3945.	85.3 %	1.	91.4 %	1.	0.2 %	672.
OCT 15 1973	6.4 %	6573.	96.2 %	3.	99.1 %	9.	-20.4 %	1508.
OCT 16 1973	0.1 %	7232.	96.8 %	2.	98.5 %	10.	-33.6 %	1448.

SEPT 16 1973 TO OCT 16 1973 PLANT AIR CONSUMPTION AUTOMATIC PLANT CONTROL

AIRFLOWS IN CUBIC FEET ASSUMED COST - $.000095/CF

	AIRFLOW#1	AIRFLOW#2	AIRFLOW#3	AIRFLOW#4	TOTAL	COST
SEPT 16 1973	2596727.	1756222.	2758455.	1978692.	9090096.	$ 863.56
SEPT 17 1973	3427263.	2673115.	3587453.	2534839.	12222670.	$ 1161.15
SEPT 18 1973	4037935.	3376237.	4224330.	2894407.	14532909.	$ 1380.63
SEPT 19 1973	3734079.	3011905.	3890459.	2703819.	13340262.	$ 1267.32
SEPT 20 1973	3947485.	3356911.	4132541.	3023535.	14460472.	$ 1373.74
SEPT 21 1973	3956011.	3333411.	4109785.	3114941.	14514148.	$ 1378.84
SEPT 22 1973	3870377.	3376775.	4059677.	2685365.	13992194.	$ 1329.26
SEPT 23 1973	3194263.	2409421.	3326729.	2291293.	11221706.	$ 1066.06
SEPT 24 1973	3504699.	2162037.	3624815.	2836773.	12128324.	$ 1152.19
SEPT 25 1973	3814107.	2763693.	3943673.	3164021.	13685494.	$ 1300.12
SEPT 26 1973	4060805.	2775961.	4226139.	3281809.	14344714.	$ 1362.75
SEPT 27 1973	4040201.	2413823.	4222837.	3220111.	13896972.	$ 1320.21
SEPT 28 1973	4356777.	1937826.	4533905.	3207633.	14036141.	$ 1333.43
SEPT 29 1973	3660155.	2030440.	3840997.	2612757.	12144349.	$ 1153.71
SEPT 30 1973	2718000.	1671137.	2878763.	2042552.	9310452.	$ 884.49
OCT 1 1973	3396561.	2212061.	3555635.	2445871.	11610128.	$ 1102.96
OCT 2 1973	3711653.	2771499.	3894555.	2640299.	13018006.	$ 1236.71
OCT 3 1973	4103336.	2552371.	4282454.	2829927.	13768088.	$ 1307.97
OCT 4 1973	4061129.	3153659.	4233197.	2687317.	14135302.	$ 1342.85
OCT 5 1973	4307189.	2468325.	4495343.	3352201.	14623058.	$ 1389.19
OCT 6 1973	4235455.	1161802.	4462935.	3575361.	13435553.	$ 1276.38
OCT 7 1973	3429617.	1037350.	3342077.	2772691.	10581734.	$ 1005.26
OCT 8 1973	3957807.	1577946.	3731053.	3022055.	12288861.	$ 1167.44
OCT 9 1973	3529247.	1823784.	3530621.	2536539.	11420191.	$ 1084.92
OCT 10 1973	4043413.	1926114.	4151723.	2765873.	12887123.	$ 1224.28
OCT 11 1973	4272625.	1716851.	4515095.	2976783.	13481354.	$ 1280.73
OCT 12 1973	4554009.	1730492.	4788159.	3002979.	14075639.	$ 1337.19
OCT 13 1973	4089083.	2087203.	4332989.	2683141.	13192416.	$ 1253.28
OCT 14 1973	3218119.	2238527.	3359659.	2213243.	11029548.	$ 1047.81
OCT 15 1973	4052925.	1480402.	4254750.	2751747.	12539824.	$ 1191.28
OCT 16 1973	3388037.	1795499.	3600397.	2177845.	10961778.	$ 1041.37
TOTAL	117268880.	70782592.	121890928.	86026240.	395967744.	$ 37617.04

SEPT 16 1973 TO OCT 16 1973 MONTHLY EFFICIENCY SUMMARY AUTOMATIC PLANT CONTROL

	PRIMARY		SECONDARY		CHLORINATOR	
	AVE	STD	AVE	STD	AVE	STD
SS	47.7 %	11.0 %	67.7 %	10.6 %	75.4 %	6.3 %
BOD5	25.3 %	22.4 %	88.0 %	4.3 %	84.4 %	9.5 %
TOC	22.4 %	10.7 %	61.6 %	8.9 %	62.4 %	8.6 %
COD	35.6 %	16.1 %	73.2 %	5.4 %	72.9 %	6.9 %

SEPT 16 1973 TO OCT 16 1973 RESPIRATION SUMMARY AUTOMATIC PLANT CONTROL

UNITS - LBS LOADING / 1000 CUBIC FEET OF AERATOR TANKAGE

	SS	BOD	TOC	COD
AVE	20.14	34.99	21.83	55.80
STD	3.63	15.08	4.71	9.73

APPENDIX C.4

MANUAL-2 DATA

OCT 28 1973 TO NOV 27 1973 PROCESS DATA SUMMARY AUTOMATIC PLANT CONTROL

DESCRIPTION	AVE	MIN	MAX	STD	UNITS
TOTAL PLANT FLOW	29.2	0.01	50.15	6.37	MGD
LOS ALTOS FLOW	SENSOR NOT OPERABLE				
MT. VIEWFLOW	SENSOR NOT OPERABLE				
P H	7.31	5.90	8.20	0.35	
D O #1	0.88	0.10	3.02	0.38	MG/LITER
D O #2	1.03	0.10	5.15	0.55	MG/LITER
D O #3	0.94	0.10	3.90	0.53	MG/LITER
D O #4	1.23	0.10	5.05	0.66	MG/LITER
AIRFLOW #1	2230.95	244.74	4402.75	666.39	CFM
AIRFLOW #2	1531.92	28.52	3241.13	563.50	CFM
AIRFLOW #3	1984.43	0.19	4313.75	732.96	CFM
AIRFLOW #4	1338.27	102.71	2829.75	525.16	CFM
TH #1 FLOW	NO VALID DATA				
TH #1 DENSITY	5.92	5.10	9.30	0.27	PERCENT
TH #2 FLOW	NO VALID DATA				
TH #2 DENSITY	3.11	0.0	6.14	1.01	PERCENT
TH #3 FLOW	15.25	0.0	61.00	23.43	GPM
TH #3 DENSITY	5.38	0.0	7.89	1.04	PERCENT
TH #4 FLOW	1.88	0.0	38.30	7.24	GPM
TH #4 DENSITY	5.65	0.0	5.91	0.94	PERCENT
RAS FLOW	12.64	4.77	18.13	1.50	MGD
WAS FLOW	0.78	0.00	1.69	0.16	MGD
MLSS	1868.88	0.62	7294.50	837.66	MG/LITER
MLSS #2	1480.97	548.31	2241.63	289.72	MG/LITER
CHLORINE #1 RESIDUAL	NO VALID DATA				
CHLORINE FLOW #1	530.92	0.0	911.25	135.23	LB/DAY
CHLORINE FLOW #2	NO VALID DATA				
CHLORINE FLOW #3	NO VALID DATA				
CHLORINE #2 RESIDUAL	NO VALID DATA				
SULFUR DIOXIDE FLOW	NO VALID DATA				
RESPIROMETER	NO VALID DATA				
TOC	121.35	5.23	253.69	44.30	MG/LITER

OCT 23 1973 TO NOV 27 1973 LOADING DATA SUMMARY AUTOMATIC PLANT CONTROL

	SS(LBS)		BOD(LBS)		TOC(LBS)		COD(LBS)	
	%REMOVED	EFFLUENT	%REMOVED	EFFLUENT	%REMOVED	EFFLUENT	%REMOVED	EFFLUENT
OCT 28 1973	100.0 %	0.	100.0 %	0.	100.0 %	0.	100.0 %	0.
OCT 29 1973	85.9 %	4624.	64.4 %	10569.	85.2 %	3963.	81.0 %	14092.
OCT 30 1973	89.1 %	6234.	55.8 %	9757.	70.3 %	6690.	77.9 %	14696.
OCT 31 1973	67.9 %	8207.	61.5 %	10806.	71.3 %	7067.	75.8 %	15047.
NOV 1 1973	77.5 %	6328.	49.0 %	11108.	63.8 %	7968.	76.9 %	14999.
NOV 2 1973	30.7 %	16254.	95.3 %	1951.	55.4 %	6734.	68.5 %	19505.
NOV 3 1973	61.1 %	7838.	95.3 %	2415.	57.7 %	6991.	62.4 %	21608.
NOV 4 1973	65.4 %	9725.	95.9 %	1776.	63.9 %	6342.	70.5 %	17125.
NOV 5 1973	56.7 %	11024.	80.6 %	8819.	69.4 %	5390.	73.1 %	18129.
NOV 6 1973	66.9 %	10695.	80.0 %	8058.	63.9 %	6467.	74.7 %	19649.
NOV 7 1973	82.4 %	6351.	82.9 %	6401.	66.3 %	7113.	67.6 %	29722.
NOV 8 1973	90.1 %	4157.	78.4 %	8418.	65.9 %	7275.	68.1 %	27282.
NOV 9 1973	83.5 %	5649.	79.7 %	11709.	69.5 %	7447.	74.1 %	21056.
NOV 10 1973	77.6 %	5647.	70.2 %	10305.	62.7 %	6588.	73.0 %	18586.
NOV 11 1973	86.2 %	4831.	85.3 %	4969.	76.2 %	5521.	78.2 %	16334.
NOV 12 1973	89.4 %	5399.	80.5 %	12473.	74.3 %	7829.	79.9 %	18898.
NOV 13 1973	74.1 %	7825.	80.5 %	12050.	58.1 %	9390.	79.7 %	17475.
NOV 14 1973	89.7 %	4714.	89.8 %	6023.	74.3 %	7333.	80.6 %	16237.
NOV 15 1973	88.5 %	6002.	87.0 %	7150.	71.7 %	8351.	82.9 %	14092.
NOV 16 1973	88.0 %	4804.	81.9 %	10012.	71.4 %	6068.	80.6 %	13653.
NOV 17 1973	68.7 %	5500.	78.9 %	11628.	53.2 %	5762.	60.1 %	14928.
NOV 18 1973	90.0 %	3746.	74.7 %	11387.	79.2 %	3995.	78.2 %	14233.
NOV 19 1973	84.4 %	7571.	84.7 %	8145.	82.4 %	4960.	83.5 %	14097.
NOV 20 1973	90.9 %	3216.	80.0 %	11577.	75.5 %	6164.	81.1 %	15811.
NOV 21 1973	84.3 %	4251.	82.9 %	5579.	81.6 %	4251.	78.0 %	16472.
NOV 22 1973	80.1 %	6321.	91.6 %	2669.	80.6 %	4682.	80.1 %	12642.
NOV 23 1973	88.5 %	4863.	89.1 %	3334.	83.7 %	3705.	87.6 %	10651.
NOV 24 1973	91.9 %	3659.	90.1 %	3064.	84.3 %	3887.	85.6 %	10519.
NOV 25 1973	90.1 %	3855.	91.2 %	2665.	80.1 %	4510.	83.4 %	12013.
NOV 26 1973	87.3 %	5286.	93.4 %	2651.	75.8 %	6437.	81.9 %	15112.
NOV 27 1973	86.0 %	5550.	95.5 %	1517.	81.1 %	5017.	80.5 %	14418.

OCT 28 1973 TO NOV 27 1973 LOADING DATA SUMMARY AUTOMATIC PLANT CONTROL

	NH3(LBS)		NO2(LBS)		NO3(LBS)		PHOS(LBS)	
	%REMOVED	EFFLUENT	%REMOVED	EFFLUENT	%REMOVED	EFFLUENT	%REMOVED	EFFLUENT
OCT 28 1973	100.0 %	0.	100.0 %	0.	100.0 %	0.	100.0 %	0.
OCT 29 1973	10.9 %	6275.	97.0 %	2.	99.6 %	2.	79.7 %	271.
OCT 30 1973	11.1 %	8016.	95.5 %	2.	98.7 %	2.	-14.5 %	1269.
OCT 31 1973	3.9 %	8321.	96.2 %	2.	99.5 %	2.	-25.5 %	1258.
NOV 1 1973	0.0 %	8905.	98.3 %	2.	95.9 %	23.	-12.1 %	1261.
NOV 2 1973	-1.4 %	8592.	96.9 %	2.	99.7 %	2.	-19.6 %	1358.
NOV 3 1973	1.4 %	7626.	80.0 %	2.	98.1 %	2.	-28.3 %	1218.
NOV 4 1973	-15.7 %	6237.	0.0 %	2.	0.0 %	2.	-9.5 %	1216.
NOV 5 1973	19.1 %	6737.	80.0 %	2.	99.6 %	2.	-16.2 %	1298.
NOV 6 1973	7.7 %	7462.	93.3 %	2.	93.1 %	90.	-30.0 %	1293.
NOV 7 1973	16.7 %	10161.	89.6 %	13.	64.0 %	114.	3.4 %	1229.
NOV 8 1973	2.3 %	11173.	87.8 %	13.	80.7 %	187.	-7.7 %	1195.
NOV 9 1973	-12.5 %	11555.	88.9 %	10.	26.1 %	167.	-18.0 %	1381.
NOV 10 1973	-20.0 %	9881.	84.6 %	5.	33.3 %	66.	-25.3 %	1468.
NOV 11 1973	-22.8 %	8052.	66.7 %	2.	58.3 %	46.	-22.7 %	1392.
NOV 12 1973	19.4 %	7829.	89.5 %	5.	99.1 %	3.	-29.9 %	1479.
NOV 13 1973	12.2 %	9477.	98.1 %	3.	76.1 %	55.	-20.1 %	1322.
NOV 14 1973	-1.4 %	9690.	97.8 %	3.	99.2 %	3.	-25.1 %	1398.
NOV 15 1973	1.3 %	9917.	97.1 %	3.	99.6 %	3.	-13.7 %	1451.
NOV 16 1973	-1.2 %	10366.	98.6 %	3.	99.4 %	3.	-84.4 %	1492.
NOV 17 1973	2.6 %	9690.	94.4 %	3.	98.6 %	3.	-10.7 %	1270.
NOV 18 1973	-6.0 %	6617.	94.1 %	2.	94.1 %	25.	-36.3 %	1246.
NOV 19 1973	31.9 %	6135.	94.7 %	5.	99.6 %	3.	-9.5 %	1201.
NOV 20 1973	-4.2 %	9915.	86.4 %	8.	66.9 %	126.	-42.7 %	1568.
NOV 21 1973	1.4 %	9166.	95.5 %	3.	94.4 %	53.	1.1 %	1196.
NOV 22 1973	-9.0 %	8545.	95.0 %	2.	98.7 %	2.	-23.0 %	1100.
NOV 23 1973	-10.6 %	8452.	75.0 %	2.	0.0 %	2.	11.6 %	972.
NOV 24 1973	-9.2 %	8118.	50.0 %	2.	95.0 %	2.	-12.3 %	1189.
NOV 25 1973	-14.0 %	7373.	93.5 %	2.	91.8 %	6.	-25.6 %	1098.
NOV 26 1973	0.7 %	8110.	96.8 %	3.	91.7 %	31.	-43.6 %	1339.
NOV 27 1973	12.0 %	8118.	92.8 %	6.	92.8 %	49.	-31.7 %	1045.

OCT 28 1973 TO NOV 27 1973 FLOW DATA SUMMARY AUTOMATIC PLANT CONTROL

	PLANT FLOW (MGD)	MIX LIQ SVI	MIX LIQ SS SLD (MGL)	RAS (MGL)	WAS (MGL)
OCT 28 1973	24.10	0.0	0.0	0.0	0.0
OCT 29 1973	26.40	0.0	0.0	0.0	0.0
OCT 30 1973	26.70	0.0	0.0	0.0	0.0
OCT 31 1973	27.34	0.0	0.0	0.0	0.0
NOV 1 1973	28.10	0.0	0.0	0.0	0.0
NOV 2 1973	27.84	0.0	0.0	0.0	0.0
NOV 3 1973	25.40	0.0	0.0	0.0	0.0
NOV 4 1973	25.35	0.0	0.0	0.0	0.0
NOV 5 1973	29.37	0.0	0.0	0.0	0.0
NOV 6 1973	29.82	0.0	0.0	0.0	0.0
NOV 7 1973	30.46	0.0	0.0	0.0	0.0
NOV 8 1973	31.15	0.0	0.0	0.0	0.0
NOV 9 1973	30.79	0.0	0.0	0.0	0.0
NOV 10 1973	28.21	0.0	0.0	0.0	0.0
NOV 11 1973	27.58	0.0	0.0	0.0	0.0
NOV 12 1973	32.37	0.0	0.0	0.0	0.0
NOV 13 1973	31.27	0.0	0.0	0.0	0.0
NOV 14 1973	31.40	0.0	0.0	0.0	0.0
NOV 15 1973	31.29	0.0	0.0	0.0	0.0
NOV 16 1973	30.32	0.0	0.0	0.0	0.0
NOV 17 1973	31.40	0.0	0.0	0.0	0.0
NOV 18 1973	29.94	0.0	0.0	0.0	0.0
NOV 19 1973	31.30	0.0	0.0	0.0	0.0
NOV 20 1973	32.13	0.0	0.0	0.0	0.0
NOV 21 1973	31.85	0.0	0.0	0.0	0.0
NOV 22 1973	28.07	0.0	0.0	0.0	0.0
NOV 23 1973	27.76	0.0	0.0	0.0	0.0
NOV 24 1973	27.42	0.0	0.0	0.0	0.0
NOV 25 1973	26.92	0.0	0.0	0.0	0.0
NOV 26 1973	30.67	0.0	0.0	0.0	0.0
NOV 27 1973	28.42	0.0	0.0	0.0	0.0

OCT 28 1973 TO NOV 27 1973 PLANT AIR CONSUMPTION AUTOMATIC PLANT CONTROL

AIRFLOWS IN CUBIC FEET ASSUMED COST - $.000095/CF

	AIRFLOW#1	AIRFLOW#2	AIRFLOW#3	AIRFLOW#4	TOTAL	COST
OCT 28 1973	3668377.	1409535.	3804477.	2116013.	10998402.	$ 1044.85
OCT 29 1973	3800539.	2001246.	3970383.	2184257.	11956425.	$ 1135.86
OCT 30 1973	3200741.	1718975.	3195097.	2549115.	10663928.	$ 1013.07
OCT 31 1973	3365521.	1549320.	3480145.	2515177.	10910163.	$ 1036.47
NOV 1 1973	3051505.	1945542.	3129204.	2237175.	10363426.	$ 984.53
NOV 2 1973	3330531.	2763239.	3823381.	2692209.	12609360.	$ 1197.89
NOV 3 1973	2855839.	2747877.	3729019.	2478955.	11811690.	$ 1122.11
NOV 4 1973	2806511.	2342557.	3291805.	1770785.	10211658.	$ 970.11
NOV 5 1973	3656287.	2591257.	3597457.	2542165.	12387166.	$ 1176.78
NOV 6 1973	3577581.	2584455.	2900880.	2012745.	11075661.	$ 1052.19
NOV 7 1973	3659869.	2643877.	3293205.	2215575.	11812526.	$ 1122.19
NOV 8 1973	3543589.	3281207.	3277607.	2283187.	12385590.	$ 1176.63
NOV 9 1973	3590003.	2793567.	3122255.	2038661.	11544486.	$ 1096.73
NOV 10 1973	3369883.	2295755.	2982539.	1707781.	10355958.	$ 983.82
NOV 11 1973	2834723.	1724435.	2213370.	1222693.	7995221.	$ 759.55
NOV 12 1973	3324571.	2412487.	2880189.	1661858.	10279105.	$ 976.51
NOV 13 1973	3628415.	2551617.	3140599.	2056980.	11377611.	$ 1080.87
NOV 14 1973	3305787.	2275143.	2775095.	1817773.	10173798.	$ 966.51
NOV 15 1973	3364657.	2392501.	2431621.	1940256.	10129035.	$ 962.26
NOV 16 1973	2985295.	2370867.	2385595.	1780951.	9522708.	$ 904.66
NOV 17 1973	2659561.	2106639.	2616120.	1424360.	8806680.	$ 836.63
NOV 18 1973	2081997.	1601317.	2011511.	920819.	6615643.	$ 628.49
NOV 19 1973	2490965.	2152009.	2430027.	1377142.	8450143.	$ 802.76
NOV 20 1973	2722893.	1756593.	2289783.	1634296.	8413565.	$ 799.29
NOV 21 1973	3513567.	2451309.	3099201.	2295975.	11360052.	$ 1079.20
NOV 22 1973	3006435.	1865004.	2100347.	1686571.	8658357.	$ 822.54
NOV 23 1973	4002067.	2335641.	2479397.	2295727.	11112832.	$ 1055.72
NOV 24 1973	2472840.	1559503.	1534015.	1162580.	6728938.	$ 639.25
NOV 25 1973	2655609.	1451677.	1710238.	1170904.	6988428.	$ 663.90
NOV 26 1973	3385021.	2348907.	2299825.	1990035.	10023788.	$ 952.26
NOV 27 1973	3668799.	2360603.	2591227.	1958398.	10579027.	$ 1005.01
TOTAL	99589712.	68384464.	88585392.	59740960.	316300288.	$ 30048.57

OCT 28 1973 TO NOV 27 1973 MONTHLY EFFICIENCY SUMMARY AUTOMATIC PLANT CONTROL

	PRIMARY		SECONDARY		CHLORINATOR	
	AVE	STD	AVE	STD	AVE	STD
SS	45.4 %	19.0 %	77.4 %	12.9 %	79.8 %	13.5 %
BOD5	9.1 %	11.5 %	85.7 %	9.8 %	81.5 %	11.7 %
TOC	20.4 %	17.8 %	74.3 %	8.2 %	71.6 %	9.1 %
COD	27.6 %	14.4 %	76.4 %	8.5 %	76.9 %	6.6 %

OCT 28 1973 TO NOV 27 1973 RESPIRATION SUMMARY AUTOMATIC PLANT CONTROL

UNITS - LBS LOADING / 1000 CUBIC FEET OF AERATOR TANKAGE

	SS	BOD	TOC	COD
AVE	18.48	38.4	17.45	52.26
STD	5.32	12.48	2.95	8.37

APPENDIX C.5

AIR/RAS DATA

JAN 13 1974 TO FEB 12 1974 PROCESS DATA SUMMARY AUTOMATIC PLANT CONTROL

DESCRIPTION	AVE	MIN	MAX	STD	UNITS
TOTAL PLANT FLOW	26.8	0.03	52.68	10.0	MGD
LOS ALTOS FLOW	SENSOR NOT OPERABLE				
MT. VIEWFLOW	SENSOR NOT OPERABLE				
P H	6.76	4.55	8.05	0.75	
D O #1	0.77	0.10	2.83	0.35	MG/LITER
D O #2	0.77	0.10	2.89	0.35	MG/LITER
D O #3	1.07	0.10	3.21	0.43	MG/LITER
D O #4	0.50	0.10	3.65	0.56	MG/LITER
AIRFLOW #1	1936.42	94.32	3605.50	678.23	CFM
AIRFLOW #2	1003.44	1.12	2477.75	685.78	CFM
AIRFLOW #3	1543.78	2.98	2994.63	530.72	CFM
AIRFLOW #4	1555.84	12.68	3651.13	631.16	CFM
TH #1 FLOW	14.30	0.0	60.52	18.88	GPM
TH #1 DENSITY	4.83	0.39	5.56	0.43	PERCENT
TH #2 FLOW	28.27	0.0	60.56	20.49	GPM
TH #2 DENSITY	3.89	0.0	6.03	1.03	PERCENT
TH #3 FLOW	0.76	0.0	56.06	5.09	GPM
TH #3 DENSITY	4.80	0.03	5.37	0.18	PERCENT
TH #4 FLOW	38.75	0.00	60.82	11.95	GPM
TH #4 DENSITY	4.07	0.41	6.47	0.97	PERCENT
RAS FLOW	11.52	0.36	21.17	3.53	MGD
WAS FLOW	0.41	0.00	1.30	0.27	MGD
MLSS	1576.31	33.92	2554.63	444.23	MG/LITER
MLSS #2	1762.99	296.55	2721.13	460.20	MG/LITER
CHLORINE #1 RESIDUAL	NO VALID DATA				
CHLORINE FLOW #1	264.52	9.44	698.50	107.46	LB/DAY
CHLORINE FLOW #2	NO VALID DATA				
CHLORINE FLOW #3	NO VALID DATA				
CHLORINE #2 RESIDUAL	NO VALID DATA				
SULFUR DIOXIDE FLOW	NO VALID DATA				
RESPIROMETER	6.01	0.0	95.43	6.49	MG/LITER
TOC	NO VALID DATA				

JAN 13 1974 TO FEB 12 1974 LOADING DATA SUMMARY AUTOMATIC PLANT CONTROL

	SS(LBS)		BOD(LBS)		TOC(LBS)		COD(LBS)	
	%REMOVED	EFFLUENT	%REMOVED	EFFLUENT	%REMOVED	EFFLUENT	%REMOVED	EFFLUENT
JAN 13 1974	87.0 %	4790.	79.3 %	11085.	79.6 %	4334.	82.0 %	13685.
JAN 14 1974	81.8 %	7638.	83.3 %	9820.	77.1 %	6001.	82.0 %	15822.
JAN 15 1974	87.5 %	5978.	89.1 %	4728.	79.1 %	4891.	81.6 %	15761.
JAN 16 1974	63.3 %	10414.	78.0 %	13364.	72.6 %	5785.	63.8 %	22853.
JAN 17 1974	70.2 %	7503.	78.6 %	9967.	75.4 %	4287.	76.5 %	13933.
JAN 18 1974	76.3 %	8118.	87.2 %	7002.	67.1 %	6596.	80.7 %	14460.
JAN 19 1974	70.4 %	10119.	85.8 %	6881.	62.7 %	6971.	63.0 %	19113.
JAN 20 1974	68.0 %	8191.	75.9 %	10934.	71.0 %	4095.	75.6 %	12900.
JAN 21 1974	81.0 %	6672.	78.7 %	9578.	79.8 %	4527.	73.0 %	17870.
JAN 22 1974	60.5 %	12114.	91.0 %	3991.	69.8 %	6888.	69.1 %	20665.
JAN 23 1974	55.3 %	9596.	91.9 %	3016.	58.4 %	7312.	70.9 %	17594.
JAN 24 1974	75.1 %	10223.	85.9 %	3346.	54.4 %	8365.	61.5 %	17891.
JAN 25 1974	73.9 %	10484.	86.2 %	4149.	58.1 %	6915.	74.7 %	18292.
JAN 26 1974	100.0 %	0.	100.0 %	0.	100.0 %	0.	100.0 %	0.
JAN 27 1974	88.0 %	4628.	91.2 %	2482.	72.2 %	4866.	77.3 %	12484.
JAN 28 1974	87.5 %	5161.	90.0 %	3734.	76.3 %	4685.	77.2 %	16655.
JAN 29 1974	86.1 %	5417.	93.3 %	2643.	80.5 %	3781.	83.5 %	13144.
JAN 30 1974	87.6 %	4382.	92.3 %	2892.	66.3 %	7449.	80.3 %	12926.
JAN 31 1974	84.5 %	4819.	90.6 %	3154.	68.1 %	6572.	84.4 %	12924.
FEB 1 1974	88.1 %	3508.	89.8 %	3420.	63.4 %	6577.	80.1 %	10962.
FEB 2 1974	79.2 %	3810.	82.4 %	3314.	61.2 %	4953.	64.6 %	12191.
FEB 3 1974	86.7 %	2837.	92.7 %	1915.	70.4 %	4255.	79.4 %	9574.
FEB 4 1974	91.0 %	3020.	92.0 %	2848.	70.4 %	5178.	81.9 %	10355.
FEB 5 1974	94.4 %	3715.	95.2 %	2229.	79.3 %	6337.	88.0 %	12674.
FEB 6 1974	81.2 %	4884.	90.0 %	3063.	70.4 %	5328.	77.0 %	14651.
FEB 7 1974	86.3 %	4258.	90.4 %	3321.	70.7 %	7238.	77.5 %	14476.
FEB 8 1974	76.6 %	8353.	68.9 %	3598.	81.4 %	4712.	73.7 %	17135.
FEB 9 1974	73.9 %	6629.	0.0 %	2273.	76.8 %	4356.	51.6 %	14584.
FEB 10 1974	92.9 %	5855.	89.7 %	2724.	77.2 %	3990.	74.0 %	13878.
FEB 11 1974	83.7 %	6594.	89.9 %	3891.	77.0 %	4972.	75.9 %	16160.
FEB 12 1974	80.9 %	7135.	88.2 %	4376.	72.7 %	5945.	73.8 %	18038.

JAN 13 1974 TO FEB 12 1974

LOADING DATA SUMMARY

AUTOMATIC PLANT CONTROL

	NH3(LBS)		NO2(LBS)		NO3(LBS)		PHOS(LBS)	
	%REMOVED	EFFLUENT	%REMOVED	EFFLUENT	%REMOVED	EFFLUENT	%REMOVED	EFFLUENT
JAN 13 1974	-7.8 %	7869.	0.0 %	2.	-5899.9 %	137.	-14.6 %	1254.
JAN 14 1974	9.7 %	8866.	88.9 %	3.	99.2 %	3.	-7.8 %	1514.
JAN 15 1974	24.5 %	10054.	92.9 %	5.	99.7 %	3.	-52.4 %	1739.
JAN 16 1974	-9.5 %	13307.	68.7 %	14.	80.0 %	130.	2.1 %	1360.
JAN 17 1974	9.5 %	10182.	94.1 %	3.	99.7 %	3.	-14.9 %	1340.
JAN 18 1974	18.6 %	8879.	75.0 %	3.	99.6 %	3.	-20.0 %	1370.
JAN 19 1974	-23.4 %	8882.	75.0 %	2.	99.5 %	2.	-21.1 %	1225.
JAN 20 1974	-8.6 %	6450.	0.0 %	2.	98.0 %	2.	-33.7 %	1177.
JAN 21 1974	22.0 %	7625.	87.5 %	2.	99.6 %	2.	-18.9 %	1275.
JAN 22 1974	-8.3 %	12352.	92.3 %	2.	99.8 %	2.	-35.7 %	1354.
JAN 23 1974	20.8 %	8683.	80.0 %	7.	99.7 %	2.	-11.6 %	1211.
JAN 24 1974	-4.4 %	5460.	100.0 %	0.	100.0 %	0.	-29.3 %	1231.
JAN 25 1974	14.9 %	8923.	100.0 %	0.	100.0 %	0.	-26.2 %	1126.
JAN 26 1974	100.0 %	0.	100.0 %	0.	100.0 %	0.	100.0 %	0.
JAN 27 1974	100.0 %	0.	100.0 %	0.	100.0 %	0.	-19.5 %	823.
JAN 28 1974	100.0 %	0.	100.0 %	0.	100.0 %	0.	-17.9 %	1064.
JAN 29 1974	100.0 %	0.	100.0 %	0.	100.0 %	0.	-21.2 %	1209.
JAN 30 1974	8.7 %	9202.	60.0 %	9.	91.1 %	77.	-4.3 %	960.
JAN 31 1974	-8.7 %	10953.	100.0 %	0.	100.0 %	0.	100.0 %	0.
FEB 1 1974	3.1 %	8112.	69.2 %	9.	52.6 %	197.	-8.1 %	1232.
FEB 2 1974	-6.4 %	6324.	40.0 %	6.	61.5 %	48.	11.7 %	867.
FEB 3 1974	-69.5 %	3546.	0.0 %	2.	0.0 %	2.	-10.0 %	878.
FEB 4 1974	7.5 %	3991.	50.0 %	11.	76.9 %	97.	-2.7 %	1219.
FEB 5 1974	31.8 %	3278.	44.4 %	22.	62.1 %	240.	2.6 %	1224.
FEB 6 1974	2.3 %	9324.	50.0 %	11.	71.8 %	244.	-1.0 %	1121.
FEB 7 1974	24.1 %	8728.	64.3 %	11.	100.0 %	0.	-6.5 %	1043.
FEB 8 1974	0.0 %	12423.	58.3 %	11.	56.1 %	193.	-8.9 %	921.
FEB 9 1974	1.1 %	8807.	98.0 %	0.	68.7 %	95.	-25.9 %	966.
FEB 10 1974	-1.7 %	6440.	97.8 %	0.	75.8 %	25.	-14.0 %	793.
FEB 11 1974	8.8 %	7954.	76.4 %	6.	83.7 %	88.	4.2 %	901.
FEB 12 1974	5.6 %	8205.	88.1 %	3.	87.6 %	51.	-9.0 %	976.

JAN 13 1974 TO FEB 12 1974 FLOW DATA SUMMARY AUTOMATIC PLANT CONTROL

	PLANT FLOW (MGD)	MIX LIQ SVI	MIX LIQ SS SLD (MGL)	RAS (MGL)	WAS (MGL)
JAN 13 1974	27.35	0.0	0.0	0.0	0.0
JAN 14 1974	32.71	0.0	0.0	0.0	0.0
JAN 15 1974	32.58	0.0	0.0	0.0	0.0
JAN 16 1974	34.69	0.0	0.0	0.0	0.0
JAN 17 1974	32.13	0.0	0.0	0.0	0.0
JAN 18 1974	30.42	0.0	0.0	0.0	0.0
JAN 19 1974	26.96	0.0	0.0	0.0	0.0
JAN 20 1974	24.55	0.0	0.0	0.0	0.0
JAN 21 1974	28.57	0.0	0.0	0.0	0.0
JAN 22 1974	28.48	0.0	0.0	0.0	0.0
JAN 23 1974	27.40	0.0	0.0	0.0	0.0
JAN 24 1974	27.86	0.0	0.0	0.0	0.0
JAN 25 1974	26.75	0.0	0.0	0.0	0.0
JAN 26 1974	23.10	0.0	0.0	0.0	0.0
JAN 27 1974	21.41	77.83	2182.08	5962.50	1994.33
JAN 28 1974	26.33	67.50	1958.75	8272.50	2166.67
JAN 29 1974	26.16	84.42	2103.83	7580.00	2096.67
JAN 30 1974	26.27	0.0	0.0	0.0	0.0
JAN 31 1974	26.27	0.0	0.0	0.0	0.0
FEB 1 1974	26.29	0.0	0.0	0.0	0.0
FEB 2 1974	22.84	0.0	0.0	0.0	0.0
FEB 3 1974	21.26	0.0	0.0	0.0	0.0
FEB 4 1974	25.87	0.0	0.0	0.0	0.0
FEB 5 1974	26.20	0.0	0.0	0.0	0.0
FEB 6 1974	26.62	0.0	0.0	0.0	0.0
FEB 7 1974	25.53	0.0	0.0	0.0	0.0
FEB 8 1974	25.68	0.0	0.0	0.0	0.0
FEB 9 1974	22.71	0.0	0.0	0.0	0.0
FEB 10 1974	20.80	72.50	1640.75	5840.83	1663.33
FEB 11 1974	25.92	69.42	1587.75	7890.00	1584.33
FEB 12 1974	26.32	65.75	1635.25	5631.66	1453.75

JAN 13 1974 TO FEB 12 1974 PLANT AIR CONSUMPTION AUTOMATIC PLANT CONTROL

AIRFLOWS IN CUBIC FEET ASSUMED COST - $.000095/CF

	AIRFLOW#1	AIRFLOW#2	AIRFLOW#3	AIRFLOW#4	TOTAL	COST
JAN 13 1974	2346395.	1093248.	1563739.	1798851.	6802233.	$ 646.21
JAN 14 1974	3118019.	85824.	1989440.	2633251.	7826534.	$ 743.52
JAN 15 1974	3588067.	117170.	2146039.	3229513.	9080789.	$ 862.67
JAN 16 1974	3652797.	124991.	2536535.	2967653.	9281975.	$ 881.79
JAN 17 1974	3923299.	114331.	2393607.	2995367.	9426603.	$ 895.53
JAN 18 1974	4130551.	115851.	2562677.	3111087.	9920165.	$ 942.42
JAN 19 1974	4244847.	337383.	2004865.	3510699.	10097793.	$ 959.29
JAN 20 1974	3388617.	87598.	2922133.	2544921.	8943268.	$ 849.61
JAN 21 1974	3429273.	62642.	3272323.	2409465.	9173703.	$ 871.50
JAN 22 1974	3275065.	628008.	3278601.	2458225.	9639899.	$ 915.79
JAN 23 1974	2763011.	2056304.	2915241.	2116890.	9851446.	$ 935.89
JAN 24 1974	2889077.	2248805.	2787289.	1782377.	9707548.	$ 922.22
JAN 25 1974	2995113.	2167551.	2701649.	1784555.	9648868.	$ 916.64
JAN 26 1974	2698071.	2296099.	2430943.	1876157.	9301270.	$ 883.62
JAN 27 1974	1825926.	1633737.	1487029.	1400255.	6346947.	$ 602.96
JAN 28 1974	2355899.	1849893.	2176327.	1302131.	7684250.	$ 730.00
JAN 29 1974	2549849.	1966463.	2028466.	1918808.	8463586.	$ 804.04
JAN 30 1974	2255445.	1805203.	1850632.	1742963.	7654243.	$ 727.15
JAN 31 1974	2371015.	1890046.	1791703.	2090010.	8142774.	$ 773.56
FEB 1 1974	2443687.	2108759.	1862512.	2104727.	8519685.	$ 809.37
FEB 2 1974	2165665.	2210613.	2003797.	1947940.	8328015.	$ 791.16
FEB 3 1974	1700431.	1711731.	1323508.	1622183.	6357853.	$ 604.00
FEB 4 1974	2300997.	1955838.	1814620.	1856966.	7928421.	$ 753.20
FEB 5 1974	2285409.	1715270.	1907485.	1778989.	7687153.	$ 730.28
FEB 6 1974	2437013.	1780827.	2136675.	1237058.	7591573.	$ 721.20
FEB 7 1974	2418209.	1811654.	2238621.	2529175.	9397659.	$ 892.78
FEB 8 1974	2888863.	2234715.	1627185.	3124823.	9875586.	$ 938.18
FEB 9 1974	2363811.	1933856.	1839476.	2298327.	8435470.	$ 801.37
FEB 10 1974	1863071.	1630795.	1974354.	1791851.	7260071.	$ 689.71
FEB 11 1974	2548293.	2548829.	2689911.	2672701.	10459734.	$ 993.67
FEB 12 1974	2826419.	2469603.	2657175.	2815313.	10768510.	$ 1023.01
TOTAL	86442016.	44793520.	68914400.	69453040.	269603328.	$ 25612.30

JAN 13 1974 TO FEB 12 1974 MONTHLY EFFICIENCY SUMMARY AUTOMATIC PLANT CONTROL

	PRIMARY		SECONDARY		CHLORINATOR	
	AVE	STD	AVE	STD	AVE	STD
SS	54.5 %	10.1 %	77.0 %	10.2 %	79.6 %	9.4 %
BOD5	20.0 %	14.3 %	86.7 %	4.0 %	87.6 %	6.0 %
TOC	34.8 %	12.3 %	73.5 %	6.3 %	71.3 %	7.3 %
COD	35.4 %	9.2 %	75.8 %	7.4 %	75.2 %	7.9 %

JAN 13 1974 TO FEB 12 1974 RESPIRATION SUMMARY AUTOMATIC PLANT CONTROL

UNITS - LBS LOADING / 1000 CUBIC FEET OF AERATOR TANKAGE

	SS	BOD	TOC	COD
AVE	15.26	31.60	12.97	41.18
STD	3.81	13.00	3.14	9.68

APPENDIX C.6

RESP/RAS DATA

FEB 13 1974 TO MAR 12 1974 PROCESS DATA SUMMARY AUTOMATIC PLANT CONTROL

DESCRIPTION	AVE	MIN	MAX	STD	UNITS
TOTAL PLANT FLOW	24.72	0.12	51.28	8.79	MGD
LOS ALTOS FLOW	SENSOR NOT OPERABLE				
MT. VIEWFLOW	SENSOR NOT OPERABLE				
P H	6.94	6.91	6.96	0.05	
D O #1	.816	0.10	3.61	.434	MG/LITER
D O #2	.828	0.10	3.64	.456	MG/LITER
D O #3	.928	0.14	2.77	.389	MG/LITER
D O #4	.861	0.16	3.72	.644	MG/LITER
AIRFLOW #1	1799.62	42.50	3435.88	624.74	CFM
AIRFLOW #2	1470.58	155.27	2947.13	479.68	CFM
AIRFLOW #3	1715.43	1.12	3805.88	680.79	CFM
AIRFLOW #4	1812.60	16.03	3577.13	734.18	CFM
TH #1 FLOW	NO VALID DATA				
TH #1 DENSITY	5.03	0.33	5.48	0.09	PERCENT
TH #2 FLOW	35.68	0.0	60.66	10.81	GPM
TH #2 DENSITY	4.29	0.25	7.25	0.74	PERCENT
TH #3 FLOW	4.50	0.0	60.02	9.41	GPM
TH #3 DENSITY	5.07	0.39	9.47	0.96	PERCENT
TH #4 FLOW	35.37	0.0	60.49	14.38	GPM
TH #4 DENSITY	3.95	0.01	7.69	1.27	PERCENT
RAS FLOW	12.77	6.31	20.34	2.95	MGD
WAS FLOW	0.57	0.00	2.05	0.57	MGD
MLSS	1400.45	210.45	2022.88	292.81	MG/LITER
MLSS #2	1545.03	1026.69	1953.06	220.82	MG/LITER
CHLORINE #1 RESIDUAL	NO VALID DATA				
CHLORINE FLOW #1	1478.68	8.04	4847.75	892.44	LB/DAY
CHLORINE FLOW #2	NO VALID DATA				
CHLORINE FLOW #3	NO VALID DATA				
CHLORINE #2 RESIDUAL	NO VALID DATA				
SULFUR DIOXIDE FLOW	NO VALID DATA				
RESPIROMETER	11.68	0.10	25.29	6.10	MG/LITER
TOC	59.69	0.0	253.03	36.41	MG/LITER

FEB 13 1974 TO MAR 12 1974 LOADING DATA SUMMARY AUTOMATIC PLANT CONTROL

	SS(LBS)		BOD(LBS)		TOC(LBS)		COD(LBS)	
	%REMOVED	EFFLUENT	%REMOVED	EFFLUENT	%REMOVED	EFFLUENT	%REMOVED	EFFLUENT
FEB 13 1974	75.7 %	8403.	89.4 %	3443.	65.7 %	6969.	76.6 %	14962.
FEB 14 1974	74.0 %	6872.	81.6 %	7371.	61.0 %	8121.	96.8 %	2291.
FEB 15 1974	76.9 %	5078.	87.9 %	3900.	58.4 %	7516.	72.1 %	16454.
FEB 16 1974	92.8 %	2544.	91.4 %	2290.	72.7 %	4907.	86.4 %	12358.
FEB 17 1974	78.0 %	5032.	94.5 %	1461.	63.1 %	3896.	75.4 %	10227.
FEB 18 1974	79.0 %	6204.	89.6 %	2846.	74.7 %	4197.	79.6 %	11313.
FEB 19 1974	85.4 %	4814.	91.5 %	2232.	81.1 %	5252.	76.7 %	15098.
FEB 20 1974	83.2 %	3651.	92.4 %	2069.	61.3 %	5883.	78.9 %	13186.
FEB 21 1974	83.2 %	7108.	88.9 %	3332.	74.7 %	5553.	79.3 %	15105.
FEB 22 1974	73.5 %	8594.	87.4 %	2836.	66.7 %	4082.	73.5 %	13965.
FEB 23 1974	78.5 %	6008.	87.9 %	2929.	81.6 %	2629.	84.5 %	10890.
FEB 24 1974	83.3 %	5100.	90.0 %	2566.	82.6 %	2468.	78.4 %	10529.
FEB 25 1974	89.5 %	4529.	76.0 %	2836.	100.0 %	0.	84.4 %	14375.
FEB 26 1974	85.1 %	4097.	89.4 %	2107.	83.8 %	2341.	69.9 %	15997.
FEB 27 1974	87.3 %	4040.	95.9 %	1385.	84.8 %	3655.	81.3 %	14621.
FEB 28 1974	94.1 %	3120.	96.3 %	1622.	83.8 %	5200.	83.0 %	14768.
MAR 1 1974	100.0 %	0.	95.3 %	1961.	82.4 %	5836.	79.4 %	16341.
MAR 2 1974	90.1 %	5832.	93.8 %	1884.	81.9 %	9422.	84.4 %	15703.
MAR 3 1974	89.2 %	4272.	96.4 %	1349.	69.8 %	5845.	81.0 %	12815.
MAR 4 1974	93.1 %	3015.	92.6 %	2366.	80.0 %	4407.	80.6 %	14150.
MAR 5 1974	74.6 %	7086.	91.6 %	2790.	70.0 %	4650.	74.2 %	18602.
MAR 6 1974	83.3 %	3735.	94.8 %	2109.	77.3 %	4394.	69.9 %	14940.
MAR 7 1974	87.9 %	3646.	94.2 %	2309.	79.6 %	3848.	75.9 %	14178.
MAR 8 1974	91.0 %	2695.	95.4 %	1617.	86.6 %	2854.	83.5 %	9829.
MAR 9 1974	100.0 %	0.	100.0 %	0.	100.0 %	0.	100.0 %	0.
MAR 10 1974	83.5 %	6426.	92.1 %	2515.	78.5 %	4173.	75.5 %	15843.
MAR 11 1974	81.8 %	8346.	93.9 %	2147.	78.6 %	5482.	77.0 %	18548.
MAR 12 1974	83.6 %	6979.	95.6 %	1554.	79.0 %	5523.	76.9 %	19674.

FEB 13 1974 TO MAR 12 1974 LOADING DATA SUMMARY AUTOMATIC PLANT CONTROL

	NH3(LBS)		NO2(LBS)		NO3(LBS)		PHOS(LBS)	
	%REMOVED	EFFLUENT	%REMOVED	EFFLUENT	%REMOVED	EFFLUENT	%REMOVED	EFFLUENT
FEB 13 1974	17.0 %	9018.	55.4 %	0.	85.7 %	61.	4.9 %	799.
FEB 14 1974	100.0 %	0.	100.0 %	0.	100.0 %	0.	100.0 %	0.
FEB 15 1974	100.0 %	0.	100.0 %	0.	100.0 %	0.	100.0 %	0.
FEB 16 1974	100.0 %	0.	100.0 %	0.	100.0 %	0.	100.0 %	0.
FEB 17 1974	100.0 %	0.	100.0 %	0.	100.0 %	0.	100.0 %	0.
FEB 18 1974	100.0 %	0.	100.0 %	0.	100.0 %	0.	100.0 %	0.
FEB 19 1974	100.0 %	0.	100.0 %	0.	100.0 %	0.	100.0 %	0.
FEB 20 1974	100.0 %	0.	100.0 %	0.	100.0 %	0.	100.0 %	0.
FEB 21 1974	100.0 %	0.	100.0 %	0.	100.0 %	0.	100.0 %	0.
FEB 22 1974	100.0 %	0.	100.0 %	0.	100.0 %	0.	100.0 %	0.
FEB 23 1974	100.0 %	0.	100.0 %	0.	100.0 %	0.	100.0 %	0.
FEB 24 1974	100.0 %	0.	100.0 %	0.	100.0 %	0.	100.0 %	0.
FEB 25 1974	25.0 %	8271.	56.3 %	69.	62.5 %	59.	22.3 %	857.
FEB 26 1974	12.5 %	8194.	75.0 %	12.	38.5 %	94.	-75.5 %	839.
FEB 27 1974	8.2 %	6445.	-162.5 %	40.	19.4 %	112.	9.0 %	875.
FEB 28 1974	-2.3 %	4680.	87.0 %	6.	71.8 %	129.	27.8 %	909.
MAR 1 1974	8.0 %	5369.	99.4 %	0.	94.0 %	33.	13.3 %	819.
MAR 2 1974	13.6 %	4262.	99.5 %	0.	99.9 %	0.	6.8 %	803.
MAR 3 1974	13.5 %	3597.	99.4 %	0.	99.9 %	0.	19.2 %	719.
MAR 4 1974	5.9 %	3711.	55.6 %	19.	79.9 %	158.	7.5 %	997.
MAR 5 1974	10.5 %	3765.	82.8 %	11.	90.2 %	89.	-12.7 %	1118.
MAR 6 1974	15.0 %	3735.	97.2 %	2.	91.7 %	73.	8.6 %	883.
MAR 7 1974	-5.3 %	4051.	93.3 %	4.	93.2 %	47.	23.9 %	747.
MAR 8 1974	11.0 %	2822.	90.0 %	5.	91.3 %	49.	5.3 %	598.
MAR 9 1974	100.0 %	0.	100.0 %	0.	100.0 %	0.	100.0 %	0.
MAR 10 1974	-6.3 %	3518.	88.5 %	2.	65.5 %	32.	-3.3 %	990.
MAR 11 1974	12.7 %	3813.	92.3 %	4.	94.9 %	29.	2.3 %	1198.
MAR 12 1974	4.0 %	4830.	82.8 %	9.	91.9 %	62.	-14.5 %	1179.

FEB 13 1974 TO MAR 12 1974

FLOW DATA SUMMARY

AUTOMATIC PLANT CONTROL

	PLANT FLOW (MGD)	MIX LIQ SVI	MIX LIQ SS SLD (MGL)	RAS (MGL)	WAS (MGL)
FEB 13 1974	24.58	0.0	0.0	0.0	0.0
FEB 14 1974	24.97	0.0	0.0	0.0	0.0
FEB 15 1974	24.36	0.0	0.0	0.0	0.0
FEB 16 1974	21.79	0.0	0.0	0.0	0.0
FEB 17 1974	19.46	0.0	0.0	0.0	0.0
FEB 18 1974	21.88	0.0	0.0	0.0	0.0
FEB 19 1974	26.24	0.0	0.0	0.0	0.0
FEB 20 1974	24.32	0.0	0.0	0.0	0.0
FEB 21 1974	26.63	0.0	0.0	0.0	0.0
FEB 22 1974	25.76	0.0	0.0	0.0	0.0
FEB 23 1974	22.51	0.0	0.0	0.0	0.0
FEB 24 1974	19.73	0.0	0.0	0.0	0.0
FEB 25 1974	23.61	0.0	0.0	0.0	0.0
FEB 26 1974	23.39	0.0	0.0	0.0	0.0
FEB 27 1974	23.07	0.0	0.0	0.0	0.0
FEB 28 1974	24.94	0.0	0.0	0.0	0.0
MAR 1 1974	27.99	0.0	0.0	0.0	0.0
MAR 2 1974	26.90	0.0	0.0	0.0	0.0
MAR 3 1974	26.96	0.0	0.0	0.0	0.0
MAR 4 1974	27.81	0.0	0.0	0.0	0.0
MAR 5 1974	26.55	0.0	0.0	0.0	0.0
MAR 6 1974	26.34	0.0	0.0	0.0	0.0
MAR 7 1974	24.29	0.0	0.0	0.0	0.0
MAR 8 1974	19.01	0.0	0.0	0.0	0.0
MAR 9 1974	22.02	0.0	0.0	0.0	0.0
MAR 10 1974	26.57	75.17	2031.25	8873.33	2029.67
MAR 11 1974	29.65	79.83	2015.00	8638.33	2141.33
MAR 12 1974	30.80	78.58	2061.58	8785.83	2182.33

FEB 13 1974 TO MAR 12 1974 PLANT AIR CONSUMPTION AUTOMATIC PLANT CONTROL

AIRFLOWS IN CUBIC FEET ASSUMED COST - $.000095/CF

	AIRFLOW#1	AIRFLOW#2	AIRFLOW#3	AIRFLOW#4	TOTAL	COST
FEB 13 1974	2907063.	2276137.	2455137.	2936365.	10574702.	$ 1004.60
FEB 14 1974	2740665.	2295131.	2595781.	2376613.	10008190.	$ 950.78
FEB 15 1974	2851200.	2404483.	2813203.	2466815.	10535701.	$ 1000.89
FEB 16 1974	2312823.	1999801.	2252857.	2146531.	8712052.	$ 827.64
FEB 17 1974	1527395.	1498378.	1282506.	1357717.	5665996.	$ 538.27
FEB 18 1974	1946375.	1584015.	1865238.	1453157.	6848785.	$ 650.63
FEB 19 1974	2461315.	1914830.	2485939.	2500451.	9362535.	$ 889.44
FEB 20 1974	3021793.	2712153.	2756473.	3277941.	11768360.	$ 1117.99
FEB 21 1974	3136239.	2661753.	3322949.	3156785.	12277726.	$ 1166.38
FEB 22 1974	3365932.	2684508.	3516457.	3550901.	13117798.	$ 1246.19
FEB 23 1974	2817639.	2231751.	2933077.	2846003.	10828470.	$ 1028.70
FEB 24 1974	2205433.	1946203.	2714921.	2382243.	9248800.	$ 878.64
FEB 25 1974	3296601.	2681485.	3638821.	3438293.	13055200.	$ 1240.24
FEB 26 1974	3592417.	2808797.	3737589.	3720279.	13859082.	$ 1316.61
FEB 27 1974	3060791.	2476247.	2919679.	3272879.	11729596.	$ 1114.31
FEB 28 1974	2665353.	2122791.	2480757.	2911419.	10180320.	$ 967.13
MAR 1 1974	2585425.	2152527.	2482251.	2703235.	9923438.	$ 942.73
MAR 2 1974	2097063.	1554118.	2014803.	1975190.	7641174.	$ 725.91
MAR 3 1974	1627610.	1255340.	1401025.	1152986.	5436961.	$ 516.51
MAR 4 1974	2259087.	1502377.	1233550.	2079326.	7074340.	$ 672.06
MAR 5 1974	2545693.	2006659.	1588992.	2838611.	8979955.	$ 853.10
MAR 6 1974	2500993.	2209153.	1943547.	2663987.	9317680.	$ 885.18
MAR 7 1974	2753905.	2214987.	2179413.	2857547.	10005852.	$ 950.56
MAR 8 1974	2850413.	2445649.	2817027.	3005081.	11118170.	$ 1056.23
MAR 9 1974	2268207.	1790340.	2381085.	2377647.	8817279.	$ 837.64
MAR 10 1974	1841431.	1390006.	1847817.	1787061.	6866315.	$ 652.30
MAR 11 1974	2537949.	2147549.	2672695.	2870415.	10228608.	$ 971.72
MAR 12 1974	2785347.	2327613.	2834237.	2980057.	10927254.	$ 1038.09
TOTAL	72561984.	59294608.	69167712.	73085376.	274109952.	$ 26040.43

FEB 13 1974 TO MAR 12 1974 MONTHLY EFFICIENCY SUMMARY AUTOMATIC PLANT CONTROL

	PRIMARY		SECONDARY		CHLORINATOR	
	AVE	STD	AVE	STD	AVE	STD
SS	52.6 %	20.1 %	82.7 %	5.8 %	83.8 %	6.2 %
BOD5	32.4 %	16.6 %	89.0 %	4.5 %	91.9 %	4.2 %
TOC	38.9 %	16.4 %	77.7 %	7.6 %	75.3 %	8.5 %
COD	37.9 %	16.0 %	78.4 %	4.0 %	79.1 %	5.8 %

FEB 13 1974 TO MAR 12 1974 RESPIRATION SUMMARY AUTOMATIC PLANT CONTROL

UNITS - LBS LOADING / 1000 CUBIC FEET OF AERATOR TANKAGE

	SS	BOD	TOC	COD
AVE	15.66	21.43	12.34	42.16
STD	6.66	5.95	3.36	11.53

TECHNICAL REPORT DATA
(Please read Instructions on the reverse before completing)

1. REPORT NO. EPA-670/2-75-039	2.	3. RECIPIENT'S ACCESSION NO.
4. TITLE AND SUBTITLE ADVANCED AUTOMATIC CONTROL STRATEGIES FOR THE ACTIVATED SLUDGE TREATMENT PROCESS		5. REPORT DATE May 1975; Issuing Date
		6. PERFORMING ORGANIZATION CODE
7. AUTHOR(S) Joseph F. Petersack and Richard G. Smith		8. PERFORMING ORGANIZATION REPORT NO.
9. PERFORMING ORGANIZATION NAME AND ADDRESS Systems Control, Inc. 1801 Page Mill Road Palo Alto, California 94304		10. PROGRAM ELEMENT NO. 1BB043; ROAP 21ASC; Task 007
		11. CONTRACT/GRANT NO. R800356
12. SPONSORING AGENCY NAME AND ADDRESS National Environmental Research Center Office of Research and Development U.S. Environmental Protection Agency Agency Cincinnati, Ohio 45268		13. TYPE OF REPORT AND PERIOD COVERED Final Report: 6/72 - 4/74
		14. SPONSORING AGENCY CODE
15. SUPPLEMENTARY NOTES		

16. ABSTRACT

Results of a demonstration of the feasibility and benefits of applying several advanced wastewater treatment control strategies in an operational treatment plant using a digital computer are presented in this report. The work was conducted in a full size (35 MGD capacity) secondary treatment plant at Palo Alto, California. Control strategies tested were for the secondary treatment portion of the process and involved regulation of aeration tank dissolved oxygen (DO) and food for microorganism ratio (F/M). Two variations of F/M ratio control were evaluated using respectively air flow and a direct measurement of sludge respiration with an on-line respirometer to estimate food (BOD). An extensive data collection program was incorporated which allowed detailed statistical evaluation of each control algorithm with regard to performance, effluent quality impact, operating costs, and reliability, comparison was made to similar data collected during benchmark manual operation tests. Overall results indicate digital control using advanced control concepts is feasible and that demonstrable improvements in effluent quality are obtained. Direct operating cost savings in the form of an 11% reduction in air use was also shown for DO control.

17. KEY WORDS AND DOCUMENT ANALYSIS

a. DESCRIPTORS	b. IDENTIFIERS/OPEN ENDED TERMS	c. COSATI Field/Group
Automatic control, Waste treatment, Dissolved gases, Oxygen, Sludge, Activated sludge process, Instruments, Computers, Data acquisition, Analyzers	Palo Alto (California), Badger meter respirometer, Astro ecology TOC analyzer, IBM system/7, Keene suspended solids	13B

18. DISTRIBUTION STATEMENT RELEASE TO PUBLIC	19. SECURITY CLASS (This Report) UNCLASSIFIED	21. NO. OF PAGES 165
	20. SECURITY CLASS (This page) UNCLASSIFIED	22. PRICE

EPA Form 2220-1 (9-73)

U. S. GOVERNMENT PRINTING OFFICE: 1975-657-592/5362 Region No. 5-11